Pacific Gas and Electric Company®

PG&E Topock
Compressor Station
Needles, California

Supplemental Pre-Final (90%) Design Submittal for the Final Groundwater Remedy

Appendix D: Plans (Engineering Drawings)

February 2015

CH2MHILL®

ES102411163118BAO

Appendix D1
Equipment Lists

- D1-4: Freshwater Supply, Conveyance, Storage, and Injection and Remedy-produced Water Conditioning System – Manual Valves
- D1-5: Freshwater Supply, Conveyance, Storage, and Injection and Remedy-produced Water Conditioning System – Self-Contained Automated Valves
- D1-12: TCS Evaporation Ponds Upgrade Equipment
- D1-14: Moabi Regional Park Construction Headquarters Equipment

Supplemental 90% Equipment Lists

List Number	List Title	New or Updated?
D1-4	Freshwater Supply, Conveyance, Storage, and Injection and Remedy-produced Water Conditioning System – Manual Valves *(For brevity, only revised portions of the equipment list are included in this Supplemental 90%)*	**Updated** list to reflect Node 5 equipment layout optimization, details of the preferred BCW crossing design, and relocation of IRL-4 meter vault into the road.
D1-5	Freshwater Supply, Conveyance, Storage, and Injection and Remedy-produced Water Conditioning System – Self-Contained Automated Valves *(For brevity, only revised portions of the equipment list are included in this Supplemental 90%)*	**Updated** list to reflect Node 5 equipment layout optimization, details of the preferred BCW crossing design, and relocation of IRL-4 meter vault into the road.
D1-12	TCS Evaporation Ponds Upgrade Equipment *(For brevity, only revised portions of the equipment list are included in this Supplemental 90%)*	**Updated** list to reflect design details of the onsite power generation for the planned improvements at the Evaporation Ponds.
D1-14	Moabi Regional Park Construction Headquarters Equipment	**New** list to reflect design details of the proposed facilities at Moabi Regional Park.

TABLE D1-4

Freshwater Supply, Conveyance, Storage, and Injection and Remedy-produced Water Conditioning System - Manual Valves

Groundwater Remedy Supplemental 90% Design Submittal

PG&E Topock Compressor Station, Needles, California

REV.	TAG NO.	P&ID DWG. NO.	LOCATION ID	SECONDARY LOCATION ID	LINE / EQUIP. NO. [Note 1]	PIPE SPEC	VALVE TYPE	SIZE (IN)	FLOW STREAM [Note 1]	VALVE SPECIFICATION	VALVE SPECIFICATION TYPE	VALVE REV.	MAX OPERATING FLOW (GPM)	MAX OPERATING PRESSURE (PSI) [Note 2]	REMARKS	NEW, UPDATED, OR DELETED? [Note 3]
YARD PIPING VALVES																
0	TBD	C-07-21	Pipeline A	TBD	TBD	TBD	GATE	1	FW	40 27 02B	V101	A			Sta 21+40 - CARV shutoff	Deleted (a)
0	TBD	C-07-21	Pipeline A	TBD	TBD	TBD	GATE	1	RW	40 27 02B	V101	A			Sta 21+40 - CARV shutoff	Deleted (a)
0	TBD	C-07-22	Pipeline A	TBD	TBD	TBD	GATE	1	FW	40 27 02B	V134	A			Sta 31+30 - Blowoff lateral	Deleted (b)
0	TBD	C-07-22	Pipeline A	TBD	TBD	TBD	GATE	1	FW	40 27 02B	V134	A			Sta 31+30 - Blowoff lateral	Deleted (b)
0	TBD	C-07-22	Pipeline A	TBD	TBD	TBD	GATE	1	RW	40 27 02B	V134	A			Sta 31+30 - Blowoff lateral	Deleted (b)
0	TBD	C-07-22	Pipeline A	TBD	TBD	TBD	GATE	1	CA	40 27 02B	V134	A			Sta 31+30 - Blowoff lateral	Deleted (b)
0	TBD	C-07-22	Pipeline A	TBD	TBD	TBD	GATE	1	SP	40 27 02B	V134	A			Sta 31+30 - Blowoff lateral,	Deleted (b)
0	TBD	C-07-22	Pipeline A	TBD	TBD	TBD	GATE	1	FW	40 27 02B	V101	A			Sta 31+32 - CARV shutoff	Deleted (b)
0	TBD	C-07-22	Pipeline A	TBD	TBD	TBD	GATE	1	FW	40 27 02B	V101	A			Sta 31+32 - CARV shutoff	Deleted (b)
0	TBD	C-07-22	Pipeline A	TBD	TBD	TBD	GATE	1	RW	40 27 02B	V101	A			Sta 31+32 - CARV shutoff	Deleted (b)
0	TBD	C-07-22	Pipeline A	TBD	TBD	TBD	GATE	1	CA	40 27 02B	V101	A			Sta 31+32 - CARV shutoff	Deleted (b)
0	TBD	C-07-22	Pipeline A	TBD	TBD	TBD	GATE	1	SP	40 27 02B	V101	A			Sta 31+32 - CARV shutoff	Deleted (b)
0	TBD	C-07-22	Pipeline A	TBD	TBD	TBD	GATE	1	FW	40 27 02B	V134	A			Sta 33+26 - Blowoff lateral	Deleted (b)
0	TBD	C-07-22	Pipeline A	TBD	TBD	TBD	GATE	1	FW	40 27 02B	V134	A			Sta 33+26 - Blowoff lateral	Deleted (b)
0	TBD	C-07-22	Pipeline A	TBD	TBD	TBD	GATE	1	RW	40 27 02B	V134	A			Sta 33+26 - Blowoff lateral	Deleted (b)
0	TBD	C-07-22	Pipeline A	TBD	TBD	TBD	GATE	1	CA	40 27 02B	V134	A			Sta 33+26 - Blowoff lateral	Deleted (b)
0	TBD	C-07-22	Pipeline A	TBD	TBD	TBD	GATE	1	SP	40 27 02B	V134	A			Sta 33+26 - Blowoff lateral	Deleted (b)
3	TBD	C-07-23	Pipeline A	TBD	TBD	TBD	GATE	2	FW	402702B	V134	A			Sta 44+48 - Blowoff lateral	Added (b)
3	TBD	C-07-23	Pipeline A	TBD	TBD	TBD	GATE	2	FW	402702B	V134	A			Sta 44+48 - Blowoff lateral	Added (b)
3	TBD	C-07-23	Pipeline A	TBD	TBD	TBD	GATE	2	RW	402702B	V156	A			Sta 44+48 - Blowoff lateral	Added (b)
3	TBD	C-07-23	Pipeline A	TBD	TBD	TBD	GATE	2	CA	402702B	V156	A			Sta 44+48 - Blowoff lateral	Added (b)
3	TBD	C-07-23	Pipeline A	TBD	TBD	TBD	GATE	2	SP	402702B	V156	A			Sta 44+48 - Blowoff lateral	Added (b)
0	TBD	C-07-38	Pipeline A	TBD	TBD	TBD	GATE	2	FW	402702B	V134	A			Sta 31+22 - Blowoff lateral	Added (b)
0	TBD	C-07-38	Pipeline A	TBD	TBD	TBD	GATE	2	FW	402702B	V134	A			Sta 31+22 - Blowoff lateral	Added (b)
0	TBD	C-07-38	Pipeline A	TBD	TBD	TBD	GATE	2	RW	402702B	V156	A			Sta 31+22 - Blowoff lateral	Added (b)
0	TBD	C-07-38	Pipeline A	TBD	TBD	TBD	GATE	2	CA	402702B	V156	A			Sta 31+22 - Blowoff lateral	Added (b)
0	TBD	C-07-38	Pipeline A	TBD	TBD	TBD	GATE	2	SP	402702B	V156	A			Sta 31+22 - Blowoff lateral	Added (b)
0	TBD	C-07-38	Pipeline A	TBD	TBD	TBD	GATE	2	FW	402702B	V134	A			Sta 32+76 - Blowoff lateral	Added (b)
0	TBD	C-07-38	Pipeline A	TBD	TBD	TBD	GATE	2	FW	402702B	V134	A			Sta 32+76 - Blowoff lateral	Added (b)
0	TBD	C-07-38	Pipeline A	TBD	TBD	TBD	GATE	2	RW	402702B	V156	A			Sta 32+76 - Blowoff lateral	Added (b)
0	TBD	C-07-38	Pipeline A	TBD	TBD	TBD	GATE	2	CA	402702B	V156	A			Sta 32+76 - Blowoff lateral	Added (b)
0	TBD	C-07-38	Pipeline A	TBD	TBD	TBD	GATE	2	SP	402702B	V156	A			Sta 32+76 - Blowoff lateral	Added (b)
0	TBD	C-07-25	Pipeline H	TBD	TBD	TBD	GATE	1	FW	40 27 02B	V134	A			Sta 12+40 - Blowoff lateral	Updated (c)
0	TBD	C-07-25	Pipeline H	TBD	TBD	TBD	GATE	1	RW	40 27 02B	V156	A			Sta 12+40 - Blowoff lateral	Updated (c)
0	TBD	C-07-25	Pipeline H	TBD	TBD	TBD	GATE	1	CA	40 27 02B	V156	A			Sta 12+40 - Blowoff lateral	Updated (c)
0	TBD	C-07-25	Pipeline H	TBD	TBD	TBD	GATE	1	SP	40 27 02B	V156	A			Sta 12+40 - Blowoff lateral	Updated (c)
0	TBD	C-07-25	Pipeline H	TBD	TBD	TBD	GATE	1	FW	40 27 02B	V101	A			Sta 12+59 - CARV shutoff	Updated (c)
0	TBD	C-07-25	Pipeline H	TBD	TBD	TBD	GATE	1	RW	40 27 02B	V156	A			Sta 12+59- CARV shutoff	Updated (c)
0	TBD	C-07-25	Pipeline H	TBD	TBD	TBD	GATE	1	CA	40 27 02B	V156	A			Sta 12+59 - CARV shutoff	Updated (c)
0	TBD	C-07-25	Pipeline H	TBD	TBD	TBD	GATE	1	SP	40 27 02B	V156	A			Sta 12+59 - CARV shutoff	Updated (c)
0	TBD	C-07-25	Pipeline H	TBD	TBD	TBD	GATE	1	FW	40 27 02B	V134	A			Sta 15+12 - Blowoff lateral	Updated (c)
0	TBD	C-07-25	Pipeline H	TBD	TBD	TBD	GATE	1	RW	40 27 02B	V156	A			Sta 15+12 - Blowoff lateral	Updated (c)
0	TBD	C-07-25	Pipeline H	TBD	TBD	TBD	GATE	1	CA	40 27 02B	V156	A			Sta 15+12 - Blowoff lateral	Updated (c)
0	TBD	C-07-25	Pipeline H	TBD	TBD	TBD	GATE	1	SP	40 27 02B	V156	A			Sta 15+12 - Blowoff lateral	Updated (c)

Notes:

1. See drawing I-00-02 for flow stream and material identification.
2. Maximum Operating Pressure ratings apply to 73 degrees farenheit.
3. Valve(s) was added, updated, or deleted to reflect:
   - (a) Node 5 equipment layout optimization
   - (b) Details of the preferred BCW crossing design
   - (c) Relocation of IRL-4 meter vault into the road

NC= Normally closed

TBD= To be determined

TABLE D1-5

Freshwater Supply, Conveyance, Storage, and Injection and Remedy-produced Water Conditioning System - Self-Contained Automated Valves

Groundwater Remedy Supplemental 90% Design Submittal

PG&E Topock Compressor Station, Needles, California

REV.	TAG NO.	P&ID DWG. NO.	LOCATION ID	SECONDARY LOCATION ID	LINE/EQUIP NO. [Note 1]	VALVE TYPE	SIZE (IN)	FLUID	FLOW STREAM [Notes 1 and 2]	VALVE SPECIFICATION	VALVE SPECIFICATION TYPE	MAX OPERATING FLOW	MAX OPERATING FLOW UNITS	MAX OPERATING PRESSURE (PSI) [Note 3]	INLET PRESSURE*	OUTLET PRESSURE*	REMARKS	NEW, UPDATED, OR DELETED? [Note 4]
YARD PIPING VALVES																		
0	TBD	C-07-21	Pipeline A, Sta 21+40		TBD	Combination Air and vacuum valve	1	Air	FW, RW	33 12 16	TBD	1.67	scfs	150			Two valves	Deleted (a)
0	TBD	C-07-22	Pipeline A, Sta 31+30		TBD	Combination Air and vacuum valve	1	Air	FW (2), RW, CA, SP	33 12 16	TBD	1.67	scfs	150			Five valves	Deleted (b)
3	TBD	C-07-23	Pipeline A, Sta 44+45		TBD	Combination Air and vacuum valve	1	Air	FW (2), RW, CA, SP	33 12 16	TBD	1.67	scfs	150			Five valves	New (b)
0	TBD	C-07-25	Pipeline H, Sta 12+59		TBD	Combination Air and vacuum valve	1	Air	FW, RW, CA, SP	33 12 16	TBD	1.67	scfs	150			Four valves, Sta will change to 12+59	Updated (c)
0	TBD	C-07-38	Pipeline A, Sta 31+81		TBD	Combination Air and vacuum valve	1	Air	FW (2), RW, CA	33 12 16	TBD	1.67	scfs	150			Four valves	New (b)
0	TBD	C-07-38	Pipeline A, Sta 32+43		TBD	Combination Air and vacuum valve	1	Air	FW (2), RW, CA	33 12 16	TBD	1.67	scfs	150			Four valves	New (b)
0	TBD	C-07-38	Pipeline A, Sta 31+29		TBD	Duckbill check valve	6	Water	Overflow line	TBD	TBD	400	gpm	2			One valve	New (b)
0	TBD	C-07-38	Pipeline A, Sta 32+11		TBD	Duckbill check valve	6	Water	Overflow line	TBD	TBD	400	gpm	2			One valve	New (b)

Notes

1. See drawing I-00-02 for flow stream and material identification
2. The following Flow Streams are considered corrosive service and materials must be supplied in accordance with Specification: RW, CA, SP
3. Maximum Operating Pressure ratings apply to 73 degrees farenheit
4. Valve(s) was added, updated, or deleted to reflect:
   (a) Node 5 equipment layout optimization
   (b) Details of the preferred BCW crossing design
   (c) Relocation of IRL-4 meter vault into the road

*Inlet/Outlet Pressure = Set pressure for pressure relief valve or downstream set pressure for pressure reducing valve

TBD= To be determined

TABLE D1-12

TCS Evaporation Ponds Upgrade Equipment

Groundwater Remedy Supplemental 90% Design Submittal

PG&E Topock Compressor Station, Needles, California

Sheet	ID	Qty	UNIT	DESCRIPTION	Location	Manufacturer	New or Updated? [Note 1]
E-09-02		1	QTY	30 kVa UPS, 120/208V 3 PHASE, MITSUBISHI MODEL 2033A	TCS Ponds		New
E-09-02		1	QTY	CHARGE CONTROLLER, OUTBACK FM-60-150V DC	TCS Ponds		New
E-09-02		1	QTY	INVERTER, 48V DC INPUT, 120V AC OUTPUT, COTEK MODEL ST-1500-248	TCS Ponds		New
E-09-02		as REQ'D	QTY	BATTERY, SEALED LEAD ACID, ENERSYS MODEL DDm	TCS Ponds	Enersys	New
M-09-01		1	QTY	GENERATOR - CUMMINS POWER- 120/208V, 3P,WYE, NEUTRAL GROUNDED, 50-60 PSIG NATURAL GAS FUELED, MODEL GGMC	TCS Ponds	CUMMINS POWER OR EQUIVALENT	Updated
M-09-01		4	QTY	GENERATOR - GLOBALTHERMOELECTRIC - 24VDC, 20-30 PSIG NATURAL GAS FUELED, MODEL 8550	TCS Ponds	GLOBAL THERMOELECTRIC	New
M-09-01		550	FT	PIPE STEEL SEAMLESS 1.050" OD x D154" WALL. STANDARD. API-5L. GR B. SMLS. WRAP	TCS Ponds	GAS STD A-15	Updated
M-09-01		6	QTY	CONNECTER, ALL TUBE TEE, 3/8'' TUBING	TCS Ponds	GAS STD B-62	Updated
M-09-01		45	FT	TUBING, 304SS, 3/8" OD, 0.035"WT	TCS Ponds	GAS STD A-22	Updated
M-09-01		70	FT	STRUT, CHANNEL, SINGLE, 1-5/8"X 1-5/8", PN 3310T2	TCS Ponds	McMASTERCARR	Updated
M-09-01		1	QTY	LID, TRAFFIC RATED (H-20), 17"(W) X 30"(L) X 12"(H) (INSIDE DIMENSIONS)	TCS Ponds		New
M-09-01		1	QTY	VALVE BOX, TRAFFIC RATED (H-20), 17"(W) X 30"(L) X 12"(H) (INSIDE DIMENSIONS)	TCS Ponds	GAS STD K-40	New
M-09-01		256	FEET	#5 REINFORCING BAR	TCS Ponds		New
M-09-02		4	QTY	VALVE BALL, 1/4" NPT, 2000#	TCS Ponds		New
M-09-01		4	QTY	ACTUATOR VALVE - MANUAL OPERATED BUTTERFLY VALVE, 3" WATER, EPDM, STOCK# 564424	TCS Ponds	VALWORX	New
M-09-01		10	QTY	ELBOW, 3/4'' SOCKET WELD, 3000#	TCS Ponds	GAS STD B-21	Updated
M-09-01		19	QTY	MALE CONNECTOR, 3/8'' TUBING X 1/4 PIPE THD	TCS Ponds	GAS STD B-62	Updated

Notes:

1. Equipment was added or updated to reflect design details of the onsite power generation for the planned improvements at the Evaporation Ponds.

TABLE D1-14
Construction Headquarters Equipment List
Groundwater Remedy Supplemental 90% Design Submittal
PG&E Topock Compressor Station, Needles, California

Item	Sheet No.	Unique ID	Total Number	Description	System Location	Manufacturer
	G-15-01	V-*110 V-*112	2	**1-1/2" Gate Valve** Type: Gate Valve Model: See Specification 40 27 02 Connection: Flanged Wetted Materials: Epoxy interior/exterior coated cast iron Other: NSF listed	CHQ Potable Water	
	G-15-01	V-*111	1	**2" Gate Valve** Type: Gate Valve Model: See Specification 40 27 02 Connection: Flanged Wetted Materials: Epoxy interior/exterior coated cast iron Other: NSF listed	CHQ Potable Water	
	G-15-01	V-*108 V-*109	2	**2-1/2" Gate Valve** Type: Gate Valve Model: See Specification 40 27 02 Connection: Flanged Wetted Materials: Epoxy interior/exterior coated cast iron Other: NSF listed	CHQ Potable Water	
	G-15-01	V-*104	5	**3" Globe Valve** Type: Globe Valve Model: See Specification 40 27 02 Connection: Flanged Wetted Materials: Bronze trim cast iron Other: NSF listed	CHQ Potable Water	
	G-15-01	V-*101 V-*102 V-*103 V-*107	4	**3" Butterfly Valve** Type: Butterfly Valve Model: See Specification 40 27 02 Connection: Grooved End Connection Wetted Materials: Polyamide Coated cast Iron Other: NSF listed	CHQ Potable Water	

Note: Quantities only include new (to be procured) items.

TABLE D1-14
Construction Headquarters Equipment List
Groundwater Remedy Supplemental 90% Design Submittal
PG&E Topock Compressor Station, Needles, California

Item	Sheet No.	Unique ID	Total Number	Description	System Location	Manufacturer
	G-15-01	V-*105	1	**3" Check Valve** Type: Check Valve Model: See Specification 40 27 02 Connection: NPT Female Wetted Materials: Lead Free Bronze Other: NSF listed	CHQ Potable Water	
	G-15-01	V-*115	1	**6" Butterfly Valve** Type: Butterfly Valve Model: See Specification 40 27 02 Connection: Grooved End Connection Wetted Materials: Polyamide Coated cast Iron Other: NSF listed	CHQ Potable Water	
	G-15-01	V-*113 V-*114 V-*116 V-*117 V-*118 V-*119 V-*120 V-*121 V-*122 V-*123 V-*124 V-*125	11	**6" Gate Valve** Type: Gate Valve Model: See Specification 40 27 02 Connection: Flanged Wetted Materials: Epoxy interior/exterior coated cast iron Other: NSF listed	CHQ Sewer / Fire Suppression	
	G-15-01	V-*106	1	**3" Backflow Preventer** Type: Series LF007 Double Check Valve Assembly Model: LF007-XXX Connection: 3" Union Wetted Materials: Epoxy coated cast iron body Other: NSF listed	CHQ Potable Water	Watts

Note: Quantities only include new (to be procured) items.

TABLE D1-14

Construction Headquarters Equipment List

Groundwater Remedy Supplemental 90% Design Submittal

PG&E Topock Compressor Station, Needles, California

Item	Sheet No.	Unique ID	Total Number	Description	System Location	Manufacturer
	G-15-01	TNK-*101 TNK-*102	2	**5,000 gal. Tank** Material: HDPE Diameter: 102" Height: 154" Add on seismic restraints	Utility Pad	Snyder
	G-15-01	TNK-*107	2	**15,000 gal. Tank** Material: XDPE Diameter: 142" Height: 154" Add on seismic restraints	Utility Pad	Snyder
	G-15-01	TNK-*104	1	**1,000 gal. Tank** Remedy Produced Water Materials: Dual contained FRP Diameter: 4' Length: 12'	Utility Pad	Xerxes
	G-15-01	TNK-*105 TNK-*106	2	**10,000 gal Tank** Sewage tank Materials: Dual contained FRP Diameter: 8' Length: 32'	CHQ	Xerxes
	G-15-01	TNK-*103	1	**158 gal Tank** Bladder Tank Hydro Tank 170 Model: FXA-700	Utility Pad	Flo-pak

Note: Quantities only include new (to be procured) items.

TABLE D1-14
Construction Headquarters Equipment List
Groundwater Remedy Supplemental 90% Design Submittal
PG&E Topock Compressor Station, Needles, California

Item	Sheet No.	Unique ID	Total Number	Description	System Location	Manufacturer
	G-15-01	PMP-*101A PMP-*101B	2	**Pump** Potable Water Patterson Pump 5HP Motor @ 3500RPM	Utility Pad	Flo-pak
	G-15-01	PMP-*102	1	**Centrifugal Pump** Fire Suppression Water Model: Series e-1510 5EB Electrical motor connections 750 GPM, 50psi 40HP @ 1750RPM, 11" impeller	Utility Pad	Xylem
	G-15-01	PMP-*103	1	**Submersible Pump** Potable Water Model: N140, nonautomatic 3/4 to 1 HP, 120V 43 TDH @ 30 GPM	Utility Pad	Zoeller
	C-15-03	--	1	**Generator** Model: 200REOZJF 208-600V Diesel powered Dimensions: 118.1" x 51.2" x 65.8"	Utility Pad	Kohler
	C-15-03	--	1	**3-phase pad-mounted PEAK Transformer** 300 kVA Pad dimensions: 54" x 74" Height: 50"	Utility Pad	Eaton's Cooper Power Systems

Note: Quantities only include new (to be procured) items.

Appendix D2
Drawings

- 00 General
- 02 Freshwater California
- 05 Inner Recirculation Loop
- 07 Pipeline
- 09 Compressor Station Ponds
- 15 Park Moabi Facilities
- 16 Monitoring Wells

Supplemental 90% Drawings

Drawing Number	Title on Drawing List	New, Updated, or Deleted?
00 GENERAL		
Drawings in this section were updated to reflect: (0) General info such submittal title and date (1) Updated site layout and features (2) Updated drawing index (3) Details of the preferred BCW crossing design (4) Node 5 equipment layout optimization		
G-00-01	TITLE SHEET, VICINITY MAP & LOCATION MAP	Updated (0)
G-00-02	DRAWINGS KEY MAP	Updated (1)
G-00-03	DRAWING INDEX 1	Updated (2)
G-00-04	DRAWING INDEX 2	Updated (2)
G-00-05	DRAWING INDEX 3	Updated (2)
C-00-05	CIVIL DETAILS	Updated (3)
S-00-01	GENERAL STRUCTURAL NOTES	Updated (3)
E-00-07	NORTHERN BAT CAVE WASH AREA PLAN	Updated (3)
E-00-08	UPLANDS AREA PLAN	Updated (4)
E-00-09	TYPICAL NODE SITE PLAN	Updated (4)
02 FRESHWATER INJECTION CALIFORNIA		
Drawing in this section was updated to reflect details of the preferred BCW crossing design.		
I-02-02	P&ID INJECTION WELL	Updated
05 INNER RECIRCULATION LOOP		
Drawings in this section were added and updated to reflect: (1) Node 5 equipment layout optimization (2) Details of the preferred BCW crossing design (3) Relocation of IRL-4 meter vault into the road		
C-05-03	IRL-2 ACCESS ROAD PLAN AND SECTION	Updated (1)
C-05-04	INNER RECIRCULATION LOOP INJECTION WELL IRL-1 SITE PLAN	Updated (2)
C-05-06	INNER RECIRCULATION LOOP INJECTION WELL IRL-3 AND NODE 5 SITE PLAN	Updated (1)
C-05-07	INNER RECIRCULATION LOOP INJECTION WELL IRL-4 SITE PLAN	Updated (3)
S-05-09	INNER RECIRCULATION LOOP LEAK COLLECTION SUMP PIPELINE A, STA 31+29	New (2)
S-05-10	INNER RECIRCULATION LOOP LEAK COLLECTION SUMP PIPELINE A, STA 31+29	New (2)
S-05-11	INNER RECIRCULATION LOOP LEAK COLLECTION SUMP PIPELINE A, STA 32+61	New (2)
S-05-12	INNER RECIRCULATION LOOP LEAK COLLECTION SUMP PIPELINE A, STA 32+61	New (2)
M-05-09	INNER RECIRCULATION LOOP LEAK COLLECTION SUMP PIPELINE A, STA 31+29	New (2)
M-05-10	INNER RECIRCULATION LOOP LEAK COLLECTION SUMP PIPELINE A, STA 32+61	New (2)
E-05-01	INNER RECIRCULATION LOOP INJECTION WELL IRL-1 SITE PLAN	Updated (2)

Supplemental 90% Drawings

Drawing Number	Title on Drawing List	New, Updated, or Deleted?
E-05-02	INNER RECIRCULATION LOOP INJECTION WELL IRL-2 SITE PLAN	Updated (1)
E-05-03	INNER RECIRCULATION LOOP INJECTION WELL IRL-3 SITE PLAN	Updated (1)
E-05-04	INNER RECIRCULATION LOOP INJECTION WELL IRL-4 SITE PLAN	Updated (3)
07 PIPELINE		
Drawings in this section were added and updated to reflect: (1) Node 5 equipment layout optimization (2) Details of the preferred BCW crossing design (3) Relocation of IRL-4 meter vault into road		
C-07-01	PIPELINE KEY MAP	Updated (2)
C-07-02	PIPELINE SEGMENT MAP	Updated (2)
C-07-03	PIPE SCHEDULE	Updated (2)
C-07-21	PLAN AND PROFILE PIPELINE "A" STA 20+50 TO STA 28+75	Updated (1)
C-07-22	PLAN AND PROFILE PIPELINE "A" STA 28+75 TO STA 36+50	Updated (2)
C-07-23	PLAN AND PROFILE PIPELINE "A" STA 36+50 TO STA 45+00	Updated (2)
C-07-25	PLAN AND PROFILE PIPELINE "H" STA 10+00 TO STA 15+33	Updated (3)
C-07-38	BAT CAVE WASH CROSSING PIPING PLAN AND SECTION	New (2)
C-07-101	TRENCH SECTIONS	Updated (2)
C-07-102	PIPELINE SECTIONS	Updated (2, 3)
C-07-126	CROSSING DETAILS	Updated
C-07-129	BAT CAVE WASH CROSSING SITE PLAN	New (2)
C-07-130	BAT CAVE WASH PROFILES	New (2)
C-07-131	TRENCH SECTIONS	New (2)
S-07-01	AERIAL CROSSING PIPELINE "A"	Deleted (2)
S-07-02	AERIAL CROSSING PIPELINE "A" ABUTMENT - PLAN, SECTIONS AND DETAILS	Deleted (2)
S-07-03	AERIAL CROSSING PIPELINE "A" PLANS AND ELEVATION	Deleted (2)
S-07-04	AERIAL CROSSING PIPELINE "A" SECTIONS AND DETAILS	Deleted (2)
S-07-05	AERIAL CROSSING PIPELINE "A" SECTIONS AND DETAILS	Deleted (2)
S-07-06	AERIAL CROSSING PIPELINE "A" PIPE SUPPORT AND LOCATIONS	Deleted (2)
S-07-07	AERIAL CROSSING PIPELINE "A" SECTIONS AND DETAILS	Deleted (2)
S-07-08	AERIAL CROSSING PIPELINE "A" SECTIONS AND DETAILS	Deleted (2)
S-07-01	CAST-IN-PLACE REINFORCED CONCRETE DOUBLE BOX CULVERT	New (2)
S-07-02	CAST-IN-PLACE REINFORCED CONCRETE DOUBLE BOX CULVERT	New (2)
S-07-03	CAST-IN-PLACE REINFORCED CONCRETE DOUBLE BOX CULVERT	New (2)

Supplemental 90% Drawings

Drawing Number	Title on Drawing List	New, Updated, or Deleted?
09 COMPRESSOR STATION PONDS		
Drawings in this section were added and updated to reflect design details of the onsite power generation for the planned improvements at the Evaporation Ponds.		
G-09-01	COMPRESSOR STATION PONDS UPGRADES GENERAL NOTES	Updated
C-09-01	COMPRESSOR STATION PONDS UPGRADES TRENCH DETAILS	Updated
C-09-03	COMPRESSOR STATION PONDS UPGRADES CONCRETE DETAILS	Updated
C-09-04	COMPRESSOR STATION PONDS UPGRADES CONDUIT DETAILS	Updated
A-09-01	COMPRESSOR STATION PONDS UPGRADES POND LAYOUT	Updated
A-09-02	COMPRESSOR STATION PONDS UPGRADES FRAMING PLANS	Updated
A-09-03	COMPRESSOR STATION PONDS UPGRADES DETAILS	New
M-09-01	COMPRESSOR STATION PONDS UPGRADES GENERATOR AND CONNECTOR PLAN	Updated
M-09-07	COMPRESSOR STATION PONDS UPGRADES TEG & CONNECTION DETAILS	Updated
E-09-02	COMPRESSOR STATION PONDS UPGRADES ELECTRICAL SINGLE LINE DIAGRAM	Updated
15 PARK MOABI FACILITIES		
Drawings in this section were added to reflect design details of the proposed facilities at Moabi Regional Park.		
G-15-01	CONSTRUCTION HEADQUARTERS PROCESS FLOW DIAGRAM	New
C-15-01	CONSTRUCTION HEADQUARTERS SITE PLAN	New
C-15-02	CONSTRUCTION HEADQUARTERS UTILITY CONNECTIONS	New
C-15-03	CONSTRUCTION HEADQUARTERS PIPING PLAN	New
C-15-04	CONSTRUCTION HEADQUARTERS SECURITY PLAN	New
C-15-05	PARK MOABI SOIL STAGING AND STORAGE SITE PLAN	New
C-15-06	CONSTRUCTION HEADQUARTERS CIVIL DETAILS	New
C-15-07	CONSTRUCTION HEADQUARTERS TRENCH SECTIONS	New
S-15-01	WORKSHOP BUILDING GENERAL NOTES	New
S-15-02	WORKSHOP BUILDING AXONOMETRIC VIEWS	New
S-15-03	WORKSHOP BUILDING ELEVATIONS (1 OF 2)	New
S-15-04	WORKSHOP BUILDING ELEVATIONS (2 OF 2)	New
S-15-05	WORKSHOP BUILDING FOUNDATION PLAN	New
S-15-06	WORKSHOP BUILDING FINISH FLOOR PLAN	New
S-15-07	WORKSHOP BUILDING ROOF PLAN	New
S-15-08	WORKSHOP BUILDING SECTION – TYPICAL FRAME	New
S-15-09	WORKSHOP BUILDING SECTION	New
S-15-10	WORKSHOP BUILDING SECTIONS AND DETAILS (1 OF 2)	New
S-15-11	WORKSHOP BUILDING SECTIONS AND DETAILS (2 OF 2)	New

Supplemental 90% Drawings

Drawing Number	Title on Drawing List	New, Updated, or Deleted?
S-15-12	WORKSHOP BUILDING TYPICAL DETAILS	New
S-15-13	PARKING SUN SHADE FOUNDATION PLAN	New
S-15-14	PARKING SUN SHADE ROOF FRAMING PLAN	New
S-15-15	PARKING SUN SHADE ROOF PLAN	New
S-15-16	PARKING SUN SHADE SECTIONS	New
S-15-17	PARKING SUN SHADE DETAILS	New
S-15-18	UTILITY PAD PLANS	New
S-15-19	UTILITY PAD DETAILS	New
S-15-20	DECONTAMINATION PAD PLAN AND DETAILS	New
M-15-01	WORKSHOP BUILDING– HVAC PLAN	New
P-15-01	PLUMBING FLOOR PLAN - DWV	New
P-15-02	PLUMBING SCHEMATIC - DWV	New
P-15-03	PLUMBING FLOOR PLAN - DOMESTIC HOT AND COLD WATER	New
P-15-04	PLUMBING SCHEMATIC - DOMESTIC HOT AND COLD WATER	New
F-15-01	CONSTRUCTION HEADQUARTERS FIRE SUPPRESSION YARD PLAN	New
F-15-02	WORKSHOP FIRE PROTECTION PLAN (1 OF 3)	New
F-15-03	WORKSHOP FIRE PROTECTION PLAN (2 OF 3)	New
F-15-04	WORKSHOP FIRE PROTECTION PLAN (3 OF 3)	New
E-15-01	CONSTRUCTION HEADQUARTERS SINGLE LINE DIAGRAM	New
E-15-02	CONSTRUCTION HEADQUARTERS SOLAR SINGLE LINE DIAGRAM	New
E-15-03	CONSTRUCTION HEADQUARTERS ELECTRICAL PLAN	New
E-15-04	UTILITY PAD ELECTRICAL PLAN	New
E-15-05	WORKSHOP BUILDING ELECTRICAL PLAN	New
E-15-06	WORKSHOP BUILDING LIGHTING PLAN (1 OF 2)	New
E-15-07	WORKSHOP BUILDING LIGHTING PLAN (2 OF 2)	New
E-15-08	WORKSHOP BUILDING ELECTRICAL SCHEDULES	New
16 MONITORING WELLS		
Drawings in this section were updated to reflect specific locations and details for wells MW-X and MW-Y and the new sample point vault.		
E-16-01	MONITORING WELLS DATA COLLECTION STATIONS SITE PLAN	Updated
E-16-22	MONITORING WELL DATA COLLECTION SYSTEM SHEET 19	Updated
E-16-23	MONITORING WELL DATA COLLECTION SYSTEM SHEET 20	Updated

Topock Groundwater Remediation Project

PG&E Topock Compressor Station

Needles, California

Supplemental Pre-Final (90%) Plans

February 2015

Source: Aerial from Google Earth Pro © 2012. Modified by CH2M HILL.

DRAFT
NOT FOR
CONSTRUCTION

E2 Consulting Engineers, Inc.
1900 Powell Street, Ste. 250
Emeryville, CA 94608
(510) 652-1164

CH2MHILL.

NO.	DATE	DESCRIPTION	GM/SPEC	DWN	CHKD	SUPV	APVD BY
1	02/02/15	SUPPLEMENTAL PRE-FINAL (90%) DESIGN SUBMITTAL					

REVISIONS

APPROVED BY
SO
SUPV
DSGN PC
DWN PC
CHKD PT
OK PT
DATE 02/02/15
SCALES NTS

TOPOCK GROUNDWATER REMEDIATION PROJECT
TITLE SHEET, VICINITY MAP & LOCATION MAP

GAS TRANSMISSION & DISTRIBUTION
PACIFIC GAS AND ELECTRIC COMPANY
SAN FRANCISCO, CALIFORNIA

MICROFILM
BILL OF MATL
DWG LIST
SUPSDS
SUPSD BY
SHEET NO. of SHEETS
G-00-01
REV

PLOT DATE: $PLOTDATE PLOT TIME: $PLOTTIME
FILENAME: e2-g-xxx-0001ad.dwg

ES063014122946RDD PGE_BOD_EngineeringDwg_Cover_90.indd cmont 6/30/14

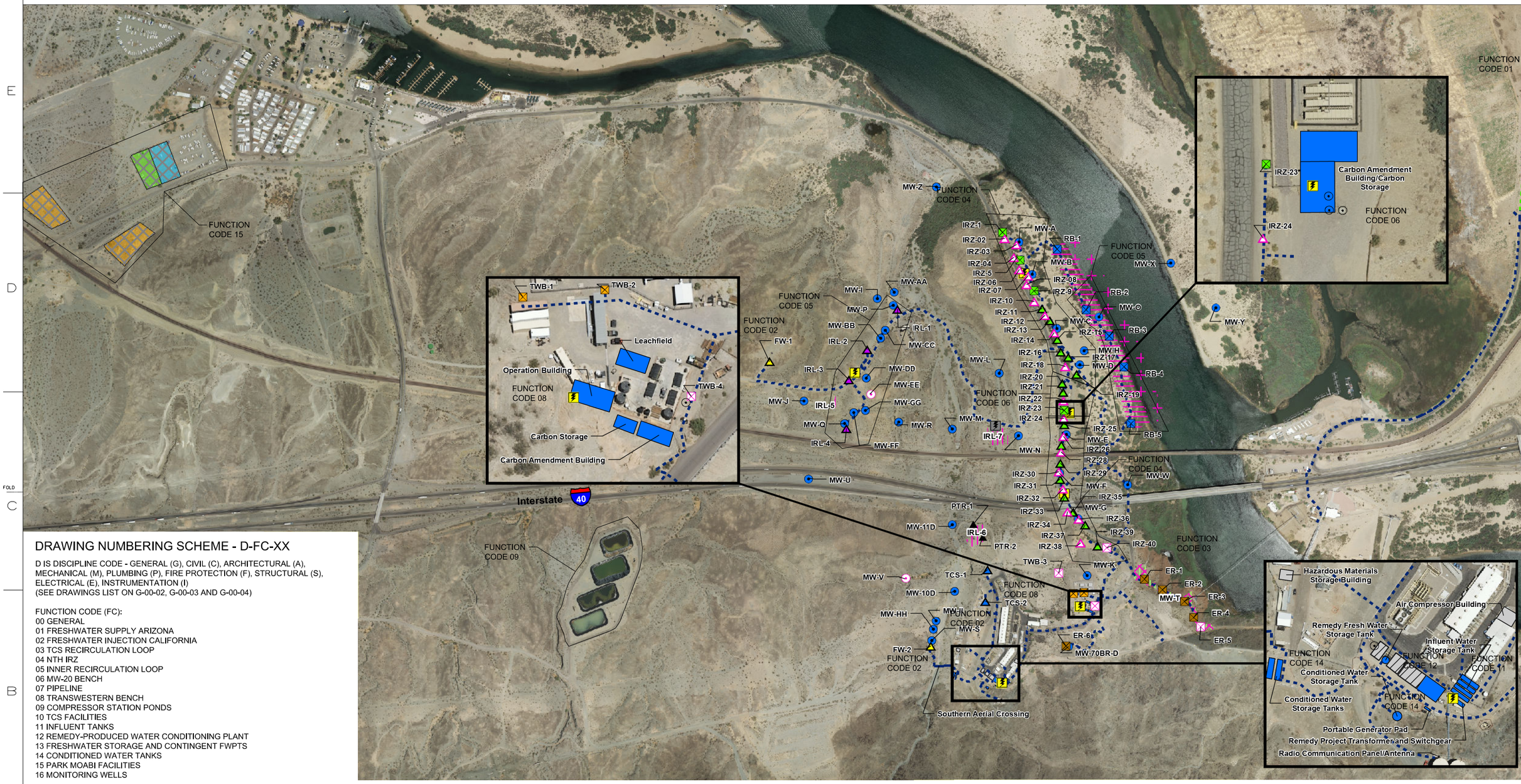

DRAWING NUMBERING SCHEME - D-FC-XX

D IS DISCIPLINE CODE - GENERAL (G), CIVIL (C), ARCHITECTURAL (A), MECHANICAL (M), PLUMBING (P), FIRE PROTECTION (F), STRUCTURAL (S), ELECTRICAL (E), INSTRUMENTATION (I)
(SEE DRAWINGS LIST ON G-00-02, G-00-03 AND G-00-04)

FUNCTION CODE (FC):
00 GENERAL
01 FRESHWATER SUPPLY ARIZONA
02 FRESHWATER INJECTION CALIFORNIA
03 TCS RECIRCULATION LOOP
04 NTH IRZ
05 INNER RECIRCULATION LOOP
06 MW-20 BENCH
07 PIPELINE
08 TRANSWESTERN BENCH
09 COMPRESSOR STATION PONDS
10 TCS FACILITIES
11 INFLUENT TANKS
12 REMEDY-PRODUCED WATER CONDITIONING PLANT
13 FRESHWATER STORAGE AND CONTINGENT FWPTS
14 CONDITIONED WATER TANKS
15 PARK MOABI FACILITIES
16 MONITORING WELLS

XX - SEQUENTIAL DRAWING NUMBER STARTS AT 0 FOR EACH DISCIPLINE AND FUNCTION CODE.

FOR PIPELINE DRAWINGS (FUNCTION CODE 07) SEE THE PIPELINE DRAWINGS KEY MAP C-07-01 AND PIPELINE SEGMENT MAP C-07-02

DRAFT
NOT FOR
CONSTRUCTION

CH2MHILL®

NO.	DATE	DESCRIPTION	GM/SPEC	DWN	CHKD	SUPV	APVD BY
3	2/2/15	SUPPLEMENTAL PRE-FINAL (90%) DESIGN		JM	JP	JP	CH
2	9/8/14	PRE-FINAL (90%) DESIGN		JM	JP	JP	CH
1	4/5/13	INTERMEDIATE (60%) DESIGN		JM	JP	JP	CH
0	11/18/11	PRELIMINARY (30%) DESIGN		JM	JP	JP	CH

REVISIONS

APPROVED BY: SO; SUPV; DSGN PC; DWN PC; CHKD PT; OK CH; DATE 2/2/15; SCALES N-A

TOPOCK GROUNDWATER REMEDIATION PROJECT

DRAWINGS KEY MAP

GAS TRANSMISSION & DISTRIBUTION
PACIFIC GAS AND ELECTRIC COMPANY
SAN FRANCISCO, CALIFORNIA

MICROFILM
BILL OF MATL
DWG LIST
SUPSDS
SUPSD BY
SHEET NO. of SHEETS
G-00-02 REV 3

PLOT DATE: 2015\01\19 PLOT TIME: 11:46:59 AM
FILENAME: CH-G-00-002J.dgn
N1808

00 - GENERAL SHEETS

DRAWING NUMBER	DRAWING TITLE
G-00-01	TITLE SHEET, VICINITY MAP & LOCATION MAP
G-00-02	DRAWINGS KEY MAP
G-00-03	DRAWING INDEX 1
G-00-04	DRAWING INDEX 2
G-00-05	DRAWING INDEX 3
G-00-06	ABBREVIATIONS
G-00-07	GENERAL LEGENDS AND SYMBOLS
G-00-08	PROCESS SCHEMATIC FOR FRESH WATER INJECTION AND REMEDY-PRODUCED WATER
C-00-01	GENERAL CIVIL NOTES
C-00-02	WELL LOCATION MAP
C-00-03	WELL SCHEDULE
C-00-04	OVERALL CIVIL SITE PLAN
C-00-05	CIVIL DETAILS
C-00-06	CHAIN LINK FENCE AND GATE
C-00-07	CHAIN LINK FENCE AND GATE DETAILS
A-00-00	ARCHITECTURAL LEGENDS AND ABBREVIATIONS
S-00-01	GENERAL STRUCTURAL NOTES
S-00-02	GENERAL STRUCTURAL DETAILS
S-00-03	GENERAL STRUCTURAL DETAILS
S-00-04	GENERAL STRUCTURAL DETAILS
S-00-05	WELL VAULT SCHEDULE
S-00-06	WELL VAULT TOP SLAB DETAILS
M-00-01	MECHANICAL STANDARD DETAILS
M-00-02	MECHANICAL STANDARD DETAILS
M-00-03	MECHANICAL STANDARD DETAILS
M-00-04	MISCELLANEOUS STANDARD DETAILS
M-00-05	WELL CONSTRUCTION SCHEDULE
F-00-01	FIRE PROTECTION GENERAL NOTES CARBON AMENDMENT BUILDINGS
E-00-01	ELECTRICAL SYMBOLS AND ABBREVIATIONS
E-00-02	GROUNDWATER REMEDY OVERALL ELECTRICAL SITE PLAN
E-00-03	TCS ELECTRICAL AREA PLAN
E-00-04	TRANSWESTERN BENCH AREA PLAN
E-00-05	MW-20 BENCH AREA PLAN
E-00-06	NORTH RIVERBANK AREA PLAN
E-00-07	NORTHERN BAT CAVE WASH AREA PLAN
E-00-08	UPLANDS AREA PLAN
E-00-09	TYPICAL NODE SITE PLAN
E-00-10	GROUNDWATER REMEDY ONE-LINE DIAGRAM
E-00-11	ELECTRICAL LOAD SCHEDULES
E-00-12	CONDUIT & CABLE SCHEDULES
E-00-13	CONDUIT & CABLE SCHEDULES
E-00-14	CONDUIT & CABLE SCHEDULES
E-00-15	TRANSWESTERN BENCH SWITCHBOARD ONE-LINE DIAGRAM (NODE 1)
E-00-16	ONE-LINE DIAGRAM NODE 1
E-00-17	ONE-LINE DIAGRAM NODE 2
E-00-18	ONE-LINE DIAGRAM NODE 3
E-00-19	ONE-LINE DIAGRAM NODE 3
E-00-20	ONE-LINE DIAGRAM NODE 4
E-00-21	TRANSWESTERN BENCH SWITCHBOARD ONE-LINE DIAGRAM (NODE 5)
E-00-22	REMEDY SCADA SYSTEM BLOCK DIAGRAM
E-00-23	TRANSWESTERN BENCH COMMUNICATION PANEL 1 ELEVATION & LAYOUT
E-00-24	TRANSWESTERN BENCH COMMUNICATION PANEL 1 SCHEMATIC 1
E-00-25	TRANSWESTERN BENCH COMMUNICATION PANEL 1 SCHEMATIC 2
E-00-26	REMOTE WELL COMMUNICATION PANEL 2 ELEVATION & LAYOUT
E-00-27	REMOTE WELL COMMUNICATION PANEL 2 SCHEMATIC
E-00-28	REMOTE WELL COMMUNICATION PANEL 3 ELEVATION & LAYOUT
E-00-29	REMOTE WELL COMMUNICATION PANEL 3 SCHEMATIC
E-00-30	REMOTE WELL COMMUNICATION PANEL 4 ELEVATION & LAYOUT
E-00-31	REMOTE WELL COMMUNICATION PANEL 4 SCHEMATIC
E-00-32	REMOTE WELL COMMUNICATION PANEL 5 ELEVATION & LAYOUT
E-00-33	REMOTE WELL COMMUNICATION PANEL 5 SCHEMATIC
E-00-34	ENERGY USE CALCULATIONS
E-00-35	LOAD CALCULATIONS
E-00-36	ELECTRICAL PANEL FABRICATION NOTES
E-00-37	MOTOR ELECTRICAL PANEL EP1
E-00-38	MOTOR ELECTRICAL PANEL EP2
E-00-39	MOTOR ELECTRICAL PANEL EP3
E-00-40	VAULT ELECTRICAL PANEL FABRICATION NOTES
E-00-41	VAULT ELECTRICAL PANEL W1
E-00-42	VAULT ELECTRICAL PANEL W2
E-00-43	VAULT ELECTRICAL PANEL W2A
E-00-44	VAULT ELECTRICAL PANEL W2B
E-00-45	VAULT ELECTRICAL PANEL W10
E-00-46	VAULT ELECTRICAL PANEL W20
E-00-47	VAULT ELECTRICAL PANEL W30
E-00-48 TO -50	RESERVED
E-00-51	ELECTRICAL DETAILS 1
E-00-52	ELECTRICAL DETAILS 2
E-00-53	ELECTRICAL DETAILS 3
E-00-54	ELECTRICAL DETAILS 4
E-00-55	ELECTRICAL DETAILS 5
E-00-56	ELECTRICAL DETAILS 6
E-00-57	ELECTRICAL DETAILS 7
E-00-58	ELECTRICAL DETAILS 8

00 - GENERAL SHEETS

DRAWING NUMBER	DRAWING TITLE
I-00-01	P&ID INSTRUMENTATION SYMBOLS AND ABBREVIATIONS 1
I-00-02	P&ID INSTRUMENTATION SYMBOLS AND ABBREVIATIONS 2
I-00-03	REMEDY WELL ID SCHEDULE

01 - FRESHWATER SUPPLY ARIZONA

DRAWING NUMBER	DRAWING TITLE
C-01-01	HNWR FRESH WATER SUPPLY WELL SITE PLAN
C-01-02	FRESH WATER SUPPLY WELL SITE B - SITE PLAN
S-01-01	HNWR-1A FRESHWATER SUPPLY WELL FOUNDATION PLAN AND SECTION
S-01-02	HNWR-1A FRESHWATER SUPPLY WELL ELECTRICAL PAD FLOOR & ROOF PLAN AND SECTIONS
S-01-03	HNWR-1A FRESHWATER SUPPLY WELL ELECTRICAL PAD SECTIONS AND DETAILS
S-01-04	FRESHWATER WELL SITE B FOUNDATION PLAN AND SECTION
S-01-05	FRESHWATER WELL SITE B ELECTRICAL PAD FLOOR & ROOF PLAN AND SECTION
S-01-06	FRESHWATER WELL SITE B ELECTRICAL PAD SECTIONS AND DETAILS
S-01-07	FRESHWATER WELL SAND COLLECTION SYSTEM PLAN, SECTIONS AND DETAILS
S-01-08	FRESHWATER WELL SAND COLLECTION SYSTEM SECTIONS AND DETAILS
M-01-01	HNWR-1A WELL HEAD PIPING PLAN AND SECTIONS
M-01-02	SITE B WELL HEAD PIPING PLAN AND SECTIONS
E-01-01	FRESHWATER WELL (HNWR-1A) ELECTRICAL SITE PLAN
E-01-02	FRESHWATER WELL (HNWR-1A) PLC CONTROL PANEL ELEVATION & BACKPAN LAYOUT
E-01-03	FRESHWATER WELL (HNWR-1A) CONTROL PANEL POWER DISTRIBUTION & PLC DIAGRAM
E-01-04	FRESHWATER WELL (HNWR-1A) PUMP ELEMENTARY DIAGRAM
E-01-05	FRESHWATER WELL (SITE B) ELECTRICAL SITE PLAN
E-01-06	FRESHWATER WELL (SITE B) PLC CONTROL PANEL ELEVATION & BACKPAN LAYOUT
E-01-07	FRESHWATER WELL (SITE B) CONTROL PANEL POWER DISTRIBUTION & PLC DIAGRAM
E-01-08	FRESHWATER WELL (SITE B) PUMP ELEMENTARY DIAGRAM
I-01-01	P&ID FRESHWATER SUPPLY WELLS

02 - FRESHWATER INJECTION CALIFORNIA

DRAWING NUMBER	DRAWING TITLE
C-02-01	FRESHWATER INJECTION WELL FW-1 - SITE PLAN
C-02-02	FRESHWATER INJECTION WELL FW-2 - SITE PLAN
S-02-01	INJECTION WELL METER & VALVE VAULT TOP & BOTTOM PLANS
S-02-02	INJECTION WELL METER & VALVE VAULT SECTIONS
S-02-03	REMEDY FRESHWATER STORAGE TANK MECHANICAL PLAN AND DETAILS
S-02-04	REMEDY FRESH WATER STORAGE TANK SECTIONS AND DETAILS
M-02-01	FRESHWATER INJECTION WELL AND METER VAULT PLAN AND SECTIONS
M-02-02	FRESHWATER INJECTION WELL CONSTRUCTION DETAILS
E-02-01	TYPICAL INJECTION WELL WELL AND METER VAULTS ELECTRICAL PLAN (TYPICAL)
E-02-02	FRESHWATER INJECTION WELL FW-1 PLC CONTROL PANEL ELEVATION & BACKPAN LAYOUT
E-02-03	FRESHWATER INJECTION WELL FW-1 CONTROL PANEL POWER DISTRIBUTION & PLC DIAGRAM
E-02-04	FRESHWATER INJECTION WELL FW-1 PUMP ELEMENTARY DIAGRAM
E-02-05	FRESHWATER INJECTION WELL FW-2 PLC CONTROL PANEL ELEVATION & BACKPAN LAYOUT
E-02-06	FRESHWATER INJECTION WELL FW-2 CONTROL PANEL POWER DISTRIBUTION & PLC DIAGRAM
E-02-07	FRESHWATER INJECTION WELL FW-2 SSS PUMP ELEMENTARY DIAGRAM
E-02-08	FRESHWATER INJECTION WELL FW-2 FVNR PUMP ELEMENTARY DIAGRAM
E-02-09	FRESH WATER INJECTION WELL FW-1 SITE PLAN
E-02-10	FRESH WATER INJECTION WELL FW-2 SITE PLAN
I-02-01	P&ID FRESH WATER TANK
I-02-02	P&ID INJECTION WELL

03 - TCS RECIRCULATION LOOP

DRAWING NUMBER	DRAWING TITLE
G-03-01	TCS LOOP PROCESS FLOW DIAGRAM
S-03-01	TCS LOOP EXTRACTION WELL VAULTS - TYPE 2 - PLAN
S-03-02	TCS LOOP EXTRACTION WELL VAULTS - FOUNDATION PLAN
S-03-03	TCS LOOP EXTRACTION WELL VAULTS - SECTIONS
S-03-04	TCS LOOP INJECTION WELL VAULTS - TYPE 1 - PLAN
S-03-05	TCS LOOP INJECTION WELL VAULTS - TYPE 2 - PLAN
S-03-06	TCS LOOP INJECTION WELL VAULTS - FOUNDATION PLAN
S-03-07	TCS LOOP INJECTION WELL VAULTS - SECTIONS SHEET 1 OF 2
S-03-08	TCS LOOP INJECTION WELL VAULTS - SECTIONS
M-03-01	TCS LOOP EXTRACTION WELL CONSTRUCTION DETAILS
M-03-02	TCS LOOP INJECTION WELL CONSTRUCTION DETAILS
M-03-03	TCS LOOP EXTRACTION WELL VAULTS MECHANICAL DETAILS
M-03-04	TCS LOOP INJECTION WELL VAULTS MECHANICAL DETAILS
M-03-05	TCS LOOP INJECTION VAULTS MECHANICAL DETAILS
E-03-01	TCS LOOP EAST RAVINE EXTRACTION WELL ELECTRICAL PLAN
E-03-02	TCS LOOP TRANSWESTERN BENCH EXTRACTION WELL ELECTRICAL PLAN
E-03-03	TCS LOOP INJECTION WELL ELECTRICAL PLAN
I-03-01	TCS LOOP EAST RAVINE EXTRACTION WELLS P&ID
I-03-02	TCS LOOP TRANSWESTERN BENCH EXTRACTION WELLS P&ID
I-03-03	TCS LOOP INJECTION WELLS P&ID

04 - NTH IRZ

DRAWING NUMBER	DRAWING TITLE
G-04-01	IRZ EXTRACTION WELL PROCESS FLOW DIAGRAM
G-04-02	IRZ INJECTION WELL PROCESS FLOW DIAGRAM
C-04-01	ACCESS ROAD - PLAN AND PROFILE - PIPELINE "C" STA 10+00 TO STA 13+50
C-04-02	ACCESS ROAD - PLAN AND PROFILE - PIPELINE "C" STA 13+50 TO STA 19+00
C-04-03	ACCESS ROAD - PLAN AND PROFILE - PIPELINE "C" STA 19+00 TO STA 24+50
C-04-04	ACCESS ROAD - PLAN AND PROFILE - PIPELINE "C" STA 24+50 TO STA 30+00
C-04-05	ACCESS ROAD - PLAN AND PROFILE - PIPELINE "C" STA 30+00 TO STA 35+50
C-04-06	ACCESS ROAD - PLAN AND PROFILE - PIPELINE "C" STA 35+50 TO STA 39+50
C-04-07	ACCESS ROAD - PLAN AND PROFILE - PIPELINE "C" STA 10+00 TO STA 12+02
C-04-08	ACCESS ROAD - PLAN AND PROFILE - PIPELINE "C" STA 10+00 TO STA 14+50
C-04-09	ACCESS ROAD - PLAN AND PROFILE - PIPELINE "C" STA 14+50 TO STA 17+50
C-04-10	ACCESS ROAD - PLAN AND PROFILE - PIPELINE "C" STA 10+00 TO STA 14+58
C-04-11	ACCESS ROAD - TYPICAL ROAD SECTION
S-04-01	IRZ EXTRACTION WELL VAULTS - TYPE 1 - PLAN
S-04-02	IRZ EXTRACTION WELL VAULTS - TYPE 2 - PLAN
S-04-03	IRZ EXTRACTION WELL VAULTS - FOUNDATION PLAN
S-04-04	IRZ EXTRACTION WELL VAULTS - SECTIONS SHEET 1 OF 2
S-04-05	IRZ EXTRACTION WELL VAULTS - SECTIONS SHEET 2 OF 2
S-04-06	IRZ INJECTION WELL VAULTS - TYPE 1 - PLAN
S-04-07	IRZ INJECTION WELL VAULTS - TYPE 2 - PLAN
S-04-08	IRZ INJECTION WELL VAULTS - FOUNDATION PLAN
S-04-09	IRZ INJECTION WELL VAULTS - SECTIONS SHEET 1 OF 2
S-04-10	IRZ INJECTION WELL VAULTS - SECTIONS SHEET 2 OF 2
M-04-01	IRZ EXTRACTION WELL CONSTRUCTION DETAILS
M-04-02	IRZ INJECTION WELL CONSTRUCTION DETAILS
M-04-03	IRZ SINGLE SCREEN EXTRACTION WELL VAULTS MECHANICAL DETAILS
M-04-04	IRZ DUAL SCREEN EXTRACTION WELL VAULTS MECHANICAL DETAILS
M-04-05	IRZ SINGLE SCREEN INJECTION WELL VAULTS MECHANICAL DETAILS
M-04-06	IRZ DUAL SCREEN INJECTION WELL VAULTS MECHANICAL DETAILS
M-04-07	IRZ DUAL SCREEN INJECTION WELL VAULTS MECHANICAL SECTIONS
M-04-08	IRZ DUAL SCREEN CLUSTER INJECTION WELL VAULTS MECHANICAL DETAILS
M-04-09	IRZ DUAL SCREEN CLUSTER INJECTION WELL VAULTS MECHANICAL SECTIONS
E-04-01	IRZ SINGLE SCREEN EXTRACTION WELL ELECTRICAL PLAN
E-04-02	IRZ DUAL SCREEN EXTRACTION WELL ELECTRICAL PLAN
E-04-03	NTH IRZ SINGLE SCREEN INJECTION WELL ELECTRICAL PLAN
E-04-04	IRZ DUAL SCREEN INJECTION WELL ELECTRICAL PLAN
E-04-05	IRZ DUAL SCREEN CLUSTER INJECTION WELL ELECTRICAL PLAN
I-04-01	IRZ SINGLE SCREEN EXTRACTION WELLS P&ID
I-04-02	IRZ DUAL SCREEN EXTRACTION WELLS P&ID
I-04-03	IRZ SINGLE SCREEN INJECTION WELLS P&ID
I-04-04	IRZ DUAL SCREEN INJECTION WELLS P&ID
I-04-05	IRZ DUAL SCREEN CLUSTER INJECTION WELLS P&ID SHEET 1 OF 2
I-04-06	IRZ DUAL SCREEN CLUSTER INJECTION WELLS P&ID SHEET 2 OF 2
I-04-07	NODE 03 FIBER OPTIC NETWORK
I-04-08	NODE 03 PLC PANELS INSTRUMENTATION CONNECTION SHEET 1 OF 4
I-04-09	NODE 03 PLC PANELS INSTRUMENTATION CONNECTION SHEET 2 OF 4
I-04-10	NODE 03 PLC PANELS INSTRUMENTATION CONNECTION SHEET 3 OF 4
I-04-11	NODE 03 PLC PANELS 03 INSTRUMENTATION CONNECTION SHEET 4 OF 4
I-04-12	NODE 04 FIBER OPTIC NETWORK
I-04-13	NODE 04 PLC PANELS INSTRUMENTATION CONNECTION SHEET 1 OF 3
I-04-14	NODE 04 PLC PANELS INSTRUMENTATION CONNECTION SHEET 2 OF 3
I-04-15	NODE 04 PLC PANELS INSTRUMENTATION CONNECTION SHEET 3 OF 3

05 - INNER RECIRCULATION LOOP

DRAWING NUMBER	DRAWING TITLE
G-05-01	INNER RECIRCULATION LOOP PROCESS FLOW DIAGRAM
C-05-01	IRL-4 ACCESS ROAD SITE PLAN
C-05-02	IRL-4 ACCESS ROAD - SECTIONS
C-05-03	IRL-2 ACCESS ROAD PLAN AND SECTION
C-05-04	INNER RECIRCULATION LOOP INJECTION WELL IRL-1 SITE PLAN
C-05-05	INNER RECIRCULATION LOOP INJECTION WELL IRL-2 SITE PLAN
C-05-06	INNER RECIRCULATION LOOP INJECTION WELL IRL-3 AND NODE 5 SITE PLAN
C-05-07	INNER RECIRCULATION LOOP INJECTION WELL IRL-4 SITE PLAN
C-05-08	ACCESS ROAD - PLAN AND PROFILE - PIPELINE "G" STA 10+00 TO STA 13+50
C-05-09	ACCESS ROAD - PLAN AND PROFILE - PIPELINE "G" STA 13+50 TO STA 19+00
C-05-10	ACCESS ROAD - PLAN AND PROFILE - PIPELINE "G" STA 19+00 TO STA 24+50
C-05-11	ACCESS ROAD - PLAN AND PROFILE - PIPELINE "G" STA 24+50 TO STA 29+50
C-05-12	ACCESS ROAD - PLAN AND PROFILE - PIPELINE "G" STA 29+50 TO STA 33+17
C-05-13	ACCESS ROAD - TYPICAL ROAD SECTION
S-05-01	INNER RECIRCULATION LOOP EXTRACTION WELL VAULTS TYPE 1 - PLAN
S-05-02	INNER RECIRCULATION LOOP EXTRACTION WELL VAULTS - FOUNDATION PLAN
S-05-03	INNER RECIRCULATION LOOP EXTRACTION WELL VAULTS - SECTIONS
S-05-04	INNER RECIRCULATION LOOP INJECTION WELL VAULTS - TYPE 1 - PLAN
S-05-05	INNER RECIRCULATION LOOP INJECTION WELL VAULTS - TYPE 2 - PLAN
S-05-06	INNER RECIRCULATION LOOP INJECTION WELL VAULTS - FOUNDATION PLAN
S-05-07	INNER RECIRCULATION LOOP INJECTION WELL VAULTS - SECTIONS SHEET 1 OF 2
S-05-08	INNER RECIRCULATION LOOP INJECTION WELL VAULTS - SECTIONS SHEET 2 OF 2
S-05-09	INNER RECIRCULATION LOOP LEAK COLLECTION SUMP PIPELINE A, STA 31+29
S-05-10	INNER RECIRCULATION LOOP LEAK COLLECTION SUMP PIPELINE A, STA 31+29
S-05-11	INNER RECIRCULATION LOOP LEAK COLLECTION SUMP PIPELINE A, STA 32+61
S-05-12	INNER RECIRCULATION LOOP LEAK COLLECTION SUMP PIPELINE A, STA 32+61
M-05-01	INNER RECIRCULATION LOOP EXTRACTION WELL CONSTRUCTION DETAILS
M-05-02	INNER RECIRCULATION LOOP TYPE 1 INJECTION WELL CONSTRUCTION DETAILS
M-05-03	INNER RECIRCULATION LOOP TYPE 2 INJECTION WELL CONSTRUCTION DETAILS
M-05-04	INNER RECIRCULATION LOOP EXTRACTION WELL VAULT MECHANICAL DETAILS
M-05-05	INNER RECIRCULATION LOOP INJECTION WELL VAULTS TYPE 1 MECHANICAL DETAILS
M-05-06	INNER RECIRCULATION LOOP INJECTION WELL VAULT TYPE 1 MECHANICAL SECTIONS
M-05-07	INNER RECIRCULATION LOOP INJECTION WELL VAULTS TYPE 2 MECHANICAL DETAILS
M-05-08	INNER RECIRCULATION LOOP INJECTION WELL VAULT TYPE 2 MECHANICAL SECTIONS
M-05-09	INNER RECIRCULATION LOOP LEAK COLLECTION SUMP PIPELINE A, STA 31+29
M-05-10	INNER RECIRCULATION LOOP LEAK COLLECTION SUMP PIPELINE A, STA 32+61
E-05-01	INNER RECIRCULATION LOOP INJECTION WELL IRL-1 SITE PLAN
E-05-02	INNER RECIRCULATION LOOP INJECTION WELL IRL-2 SITE PLAN
E-05-03	INNER RECIRCULATION LOOP INJECTION WELL IRL-3 SITE PLAN
E-05-04	INNER RECIRCULATION LOOP INJECTION WELL IRL-4 SITE PLAN
E-05-05	INNER RECIRCULATION LOOP INJECTION DUAL SCREEN INJECTION WELL ELECTRICAL PLAN
E-05-06	INNER RECIRCULATION LOOP DUAL SCREEN INJECTION WELL TYPE 1 ELECTRICAL PLAN
E-05-07	INNER RECIRCULATION LOOP DUAL SCREEN INJECTION WELL TYPE 2 ELECTRICAL PLAN
E-05-08	INNER RECIRCULATION LOOP IRL-1,2,3 CONTROL PANEL POWER DISTRIBUTION & PLC DIAGRAM
E-05-09	INNER RECIRCULATION LOOP IRL-1,2,3 PUMP ELEMENTARY DIAGRAM
E-05-10	INNER RECIRCULATION LOOP IRL-4 PLC CONTROL PANEL ELEVATION & BACKPAN LAYOUT
E-05-11	INNER RECIRCULATION LOOP IRL-4 CONTROL PANEL POWER DISTRIBUTION & PLC DIAGRAM
E-05-12	INNER RECIRCULATION LOOP IRL-4 SSS PUMP ELEMENTARY DIAGRAM
E-05-13	INNER RECIRCULATION LOOP IRL-4 FVNR PUMP ELEMENTARY DIAGRAM
I-05-01	INNER RECIRCULATION LOOP EXTRACTION WELLS P&ID
I-05-02	INNER RECIRCULATION LOOP TYPE 1 INJECTION WELLS P&ID
I-05-03	INNER RECIRCULATION LOOP TYPE 2 INJECTION WELLS P&ID
I-05-04	NODE 05 FIBER OPTIC NETWORK
I-05-05	NODE 05 PLC PANEL INSTRUMENTATION CONNECTION SHEET 1 OF 2
I-05-06	NODE 05 PLC PANELS INSTRUMENTATION CONNECTION SHEET 2 OF 2

06 - MW-20 BENCH

DRAWING NUMBER	DRAWING TITLE
G-06-01	MW-20 BENCH PROCESS FLOW DIAGRAM
C-06-01	MW-20 BENCH AREA PLAN
C-06-02	MW-20 BENCH GRADING PLAN
C-06-03	MW-20 BENCH YARD PIPING PLAN
C-06-04	SECURITY AND ELECTRICAL PLAN
S-06-01	MW-20 BENCH CARBON SUBSTRATE STORAGE TANK FOUNDATION
S-06-02	RESERVED
S-06-03	MW-20 BENCH UNLOADING PAD
S-06-04	MW-20 BENCH CARBON AMENDMENT BUILDING GENERAL NOTES
S-06-05	MW-20 BENCH CARBON AMENDMENT BUILDING AXONOMETRIC VIEWS
S-06-06	MW-20 BENCH CARBON AMENDMENT BUILDING ELEVATIONS (1 OF 2)
S-06-07	MW-20 BENCH CARBON AMENDMENT BUILDING ELEVATIONS (2 OF 2)
S-06-08	MW-20 BENCH CARBON AMENDMENT BUILDING FOUNDATION PLAN
S-06-09	MW-20 BENCH CARBON AMENDMENT BUILDING FINISH FLOOR PLAN
S-06-10	MW-20 BENCH CARBON AMENDMENT BUILDING SECTION - TYPICAL FRAME
S-06-11	MW-20 BENCH CARBON AMENDMENT BUILDING SECTION
S-06-12	MW-20 BENCH CARBON AMENDMENT BUILDING SECTIONS & DETAILS
S-06-13	MW-20 BENCH CARBON AMENDMENT BUILDING TYPICAL DETAILS 1 OF 2
S-06-14	MW-20 BENCH CARBON AMENDMENT BUILDING TYPICAL DETAILS 2 OF 2
M-06-01	MW-20 BENCH CARBON AMENDMENT BUILDING MECHANICAL LAYOUT
M-06-02	MW-20 BENCH CARBON AMENDMENT BUILDING SECTIONS AND DETAILS SHEET 1 OF 2
M-06-03	MW-20 BENCH CARBON AMENDMENT BUILDING SECTIONS AND DETAILS SHEET 2 OF 2
M-06-04	IRZ CARBON SUBSTRATE STORAGE TANK MECHANICAL DETAILS
M-06-05	IRZ CARBON AMENDMENT BUILDING HVAC LAYOUT AND DETAILS
M-06-06	MW-20 BENCH FRAC TANK BASIN PIPE RACK DETAILS
M-06-07	MW-20 BENCH UNLOADING PAD PIPE RACK DETAILS
F-06-01	FIRE PROTECTION MW-20 BENCH CARBON AMENDMENT BUILDING
E-06-01	MW-20 BENCH CARBON AMENDMENT BUILDING ELECTRICAL PLAN
E-06-02	MW-20 BENCH CARBON AMENDMENT BUILDING LIGHTING PLAN
E-06-03	NOT USED
E-06-04	MW-20 BENCH CARBON AMENDMENT BUILDING ELECTRICAL SCHEDULES
I-06-01	MW-20 BENCH CARBON AMENDMENT BUILDING P&ID SHEET 1 OF 4
I-06-02	MW-20 BENCH CARBON AMENDMENT BUILDING P&ID SHEET 2 OF 4
I-06-03	MW-20 BENCH CARBON AMENDMENT BUILDING P&ID SHEET 3 OF 4
I-06-04	MW-20 BENCH CARBON AMENDMENT BUILDING P&ID SHEET 4 OF 4
I-06-05	NODE 02 FIBER OPTIC NETWORK

DRAWING INDEX

DRAFT
NOT FOR
CONSTRUCTION

CH2MHILL®

NO.	DATE	DESCRIPTION	GM/SPEC	DWN	CHKD	SUPV	APVD BY
3	2/2/15	SUPPLEMENTAL PRE-FINAL (90%) DESIGN		JU	JP	CH	CH
2	9/8/14	PRE-FINAL (90%) DESIGN		JU	JP	CH	CH
1	4/5/13	INTERMEDIATE (60%) DESIGN		JU	JP	CH	CH
0	11/18/11	PRELIMINARY (30%) DESIGN		JU	JP	CH	CH

REVISIONS

APPROVED BY: NB
SO
SUPV
DSGN JP
DWN JU
CHKD JU
OK CH
DATE 2/2/15
SCALES

TOPOCK GROUNDWATER REMEDIATION PROJECT
GENERAL
DRAWING INDEX 1

GAS TRANSMISSION & DISTRIBUTION
PACIFIC GAS AND ELECTRIC COMPANY
SAN FRANCISCO, CALIFORNIA

MICROFILM
BILL OF MATL
DWG LIST
SUPSDS
SUPSD BY
SHEET NO. of SHEETS
G-00-03
REV 3

FILENAME:
PLOT DATE: 2015\01\19 PLOT TIME: 11:13:04 AM

N1808

FILENAME: .DGN - -04

06 - MW-20 BENCH

DRAWING NUMBER	DRAWING TITLE
I-06-06	NODE 02 PLC PANELS INSTRUMENTATION CONNECTION SHEET 1 OF 2
I-06-07	NODE 02 PLC PANELS INSTRUMENTATION CONNECTION SHEET 2 OF 2

07 - PIPELINE

DRAWING NUMBER	DRAWING TITLE
G-07-01	HYDRAULIC PROFILE FRESHWATER INJECTION SYSTEM
G-07-02	HYDRAULIC PROFILE REMEDY-PRODUCED WATER SYSTEM
C-07-01	PIPELINE KEY MAP
C-07-02	PIPELINE SEGMENT MAP
C-07-03	PIPE SCHEDULE
C-07-04 TO -06	RESERVED
C-07-07	COMBINATION AIR RELIEF AND VACUUM VALVE DETAILS
C-07-08	BLOW OFF DETAILS
C-07-09	PIPELINE DETAILS
C-07-10 TO -19	RESERVED
C-07-20	PLAN AND PROFILE PIPELINE "A" STA 12+50 TO STA 20+50
C-07-21	PLAN AND PROFILE PIPELINE "A" STA 20+50 TO STA 28+75
C-07-22	PLAN AND PROFILE PIPELINE "A" STA 28+75 TO STA 36+50
C-07-23	PLAN AND PROFILE PIPELINE "A" STA 36+50 TO STA 45+00
C-07-24	PLAN AND PROFILE PIPELINE "A" STA 45+50 TO STA 54+93.36
C-07-25	PLAN AND PROFILE PIPELINE "H" STA 10+00 TO STA 15+33
C-07-26	PLAN AND PROFILE PIPELINE "B" STA 3+05 TO STA 13+50
C-07-27	PLAN AND PROFILE PIPELINE "B" STA 13+50 TO STA 21+00
C-07-28	PLAN AND PROFILE PIPELINE "B" STA 21+00 TO STA 30+50
C-07-29	PLAN AND PROFILE PIPELINE "B" STA 30+50 TO STA 40+18.83
C-07-30	PLAN AND PROFILE PIPELINE "B" STA 40+18.83 TO STA 49+50
C-07-31	PLAN AND PROFILE PIPELINE "B" STA 49+50 TO STA 59+15
C-07-32	PLAN AND PROFILE PIPELINE "B" STA 59+15 TO STA 69+00
C-07-33	PLAN AND PROFILE PIPELINE "B" STA 69+00 TO STA 78+00
C-07-34	PLAN AND PROFILE PIPELINE "B" STA 78+00 TO STA 86+50
C-07-35	PLAN AND PROFILE PIPELINE "B" STA 86+50 TO STA 96+50
C-07-36	PLAN AND PROFILE PIPELINE "B" STA 96+50 TO STA 106+50
C-07-37	PLAN AND PROFILE PIPELINE "B" - STA 106+50 TO STA 112+52.69
C-07-38	BAT CAVE WASH CROSSING PIPING PLAN AND SECTION
C-07-39	PIPELINE - PLAN AND PROFILE PIPELINE "C1", "C2", & "C3" STA 10+00 TO STA 13+50
C-07-40	PIPELINE - PLAN AND PROFILE PIPELINE "C2" STA 13+50 TO STA 19+60
C-07-41	PIPELINE - PLAN AND PROFILE PIPELINE "C3", "C4", & "C6" STA 19+60 TO STA 25+79
C-07-42	PIPELINE - PLAN AND PROFILE PIPELINE "C13" STA 10+00 TO STA 12+38
C-07-43	PIPELINE - PLAN AND PROFILE PIPELINE "C5" STA 10+00 TO STA 15+50
C-07-44	PIPELINE - PLAN AND PROFILE PIPELINE "C5","C7" & "C8" STA 15+50 TO STA 21+50
C-07-45	PIPELINE - PLAN AND PROFILE PIPELINE "C8" STA 21+50 TO STA 26+00
C-07-46	PIPELINE - PLAN AND PROFILE PIPELINE "C8" & "C9" STA 26+00 TO STA 29+49
C-07-47	PIPELINE - PLAN AND PROFILE PIPELINE "C10" & "C11" STA 29+49 TO STA 34+50
C-07-48	PIPELINE - PLAN AND PROFILE PIPELINE "C11" STA 34+50 TO STA 38+93
C-07-49	PIPELINE - PLAN AND PROFILE PIPELINE "C14" STA 10+00 TO STA 14+56
C-07-50	PIPELINE - PLAN AND PROFILE PIPELINE "C15" & "C16" STA 10+00 TO STA 15+73
C-07-51	PIPELINE - PLAN AND PROFILE PIPELINE "C17" STA 10+00 TO STA 12+28
C-07-52	PIPELINE - PLAN AND PROFILE PIPELINE "F" STA 10+00 TO STA 16+11
C-07-53	NOT USED
C-07-54	PIPELINE - PLAN AND PROFILE PIPELINE "G1" STA 10+00 TO STA 13+50
C-07-55	PIPELINE - PLAN AND PROFILE PIPELINE "G2" & "G3" STA 13+50 TO STA 19+00
C-07-56	PIPELINE - PLAN AND PROFILE PIPELINE "G2", "G3", & "G4" STA 19+50 TO STA 24+50
C-07-57	PIPELINE - PLAN AND PROFILE PIPELINE "G4" & "G5" STA 24+50 TO STA 29+50
C-07-58	PIPELINE - PLAN AND PROFILE PIPELINE "G5" & "G6" STA 29+50 TO STA 33+21
C-07-59	PIPELINE - PLAN AND PROFILE PIPELINE "C18" STA 10+00 TO STA 16+55
C-07-60 TO -67	RESERVED
C-07-68	PIPELINE - PLAN AND PROFILE STA 8+31 TO STA 10+00 PIPELINE "J"
C-07-69	PLAN AND PROFILE PIPELINE "J" STA 10+04 TO STA 15+83
C-07-70	PLAN AND PROFILE PIPELINE "F" STA 15+30 TO STA 18+00
C-07-71	PLAN AND PROFILE PIPELINE "F"STA 18+00 TO STA 23+00
C-07-72	PLAN AND PROFILE PIPELINE "F" STA 23+00 TO STA 26+25
C-07-73	PLAN AND PROFILE PIPELINE "K" STA 90+00 TO STA 91+11
C-07-74	PLAN AND PROFILE PIPELINE "L" STA 80+00 TO STA 83+90
C-07-75	PLAN AND PROFILE PIPELINE "M" STA 60+00 TO STA 65+00
C-07-76	PLAN AND PROFILE PIPELINE "M" STA 65+00 TO STA 70+30
C-07-77	PLAN AND PROFILE PIPELINE "N" STA 85+00 TO STA 86+38
C-07-78	PLAN AND PROFILE PIPELINE "I" STA 8+00 TO STA 14+60
C-07-79	PLAN AND PROFILE PIPELINE "D" STA 75+00 TO STA 77+75
C-07-80	PLAN AND PROFILE - PIPELINE "P" - STA 50+00 TO STA 51+42
C-07-81	PLAN AND PROFILE - PIPELINE "T" - STA 60+00 TO STA 60+85
C-07-82	STRUCTURE - PLAN SECTION LOCATION - 12" WATER LINE TOPOCK L300-A ARCH BRIDGE
C-07-83	STRUCTURE - SECTIONS SUPPORT - 12" WATER LINE TOPOCK L300-A ARCH BRIDGE
C-07-84	STRUCTURE - SECTIONS SUPPORT - 12" WATER LINE TOPOCK L300-A ARCH BRIDGE
C-07-85	PIPE SUPPORT DETAILS
C-07-86 TO -99	RESERVED
C-07-100	TRENCH SECTIONS
C-07-101	TRENCH SECTIONS
C-07-102	PIPELINE SECTIONS
C-07-103	PIPELINE SECTIONS
C-07-103A	PIPELINE SECTIONS
C-07-104	PIPELINE SECTIONS
C-07-105	PIPELINE SECTIONS
C-07-106	PIPELINE SECTIONS
C-07-107	PIPELINE SECTIONS
C-07-108	TRENCH SECTIONS
C-07-109	TRENCH SECTIONS
C-07-110	TRENCH SECTIONS
C-07-111	TRENCH SECTIONS

07 - PIPELINE

DRAWING NUMBER	DRAWING TITLE
C-07-112	INTERSECTION DETAILS
C-07-113	INTERSECTION DETAILS
C-07-114	INTERSECTION DETAILS
C-07-115	INTERSECTION DETAILS
C-07-116	INTERSECTION DETAILS
C-07-117	INTERSECTION DETAILS
C-07-118	INTERSECTION DETAILS
C-07-119	INTERSECTION DETAILS
C-07-120	ELECTRICAL TRENCH SECTIONS
C-07-121	ELECTRICAL TRENCH SECTIONS
C-07-122	ELECTRICAL TRENCH SECTIONS
C-07-123	INTERSECTION DETAILS
C-07-124	INTERSECTION DETAILS
C-07-125	INTERSECTION DETAILS
C-07-126	CROSSING DETAILS
C-07-127	MW-20 BENCH AREA TRENCH SECTIONS SHEET 1 OF 2
C-07-128	MW-20 BENCH AREA TRENCH SECTIONS SHEET 1 OF 2
C-07-129	BAT CAVE WASH CROSSING SITE PLAN
C-07-130	BAT CAVE WASH PROFILES
C-07-131	TRENCH SECTIONS
C-07-132 TO -199	RESERVED
C-07-200	TEMPORARY CONSTRUCTION WATERLINE SYSTEM
C-07-201	PIPELINE ROADWAY DRAINAGE IMPROVEMENTS
C-07-202	PIPELINE ROADWAY DRAINAGE IMPROVEMENTS
C-07-203	PIPELINE PROFILE
C-07-204	PIPELINE TYPICAL SECTIONS
C-07-205	PIPELINE TYPICAL SECTIONS
C-07-206	PIPELINE CULVERT PIPE CROSSING DETAIL
S-07-01	CAST-IN-PLACE REINFORCED CONCRETE DOUBLE BOX CULVERT
S-07-02	CAST-IN-PLACE REINFORCED CONCRETE DOUBLE BOX CULVERT
S-07-03	CAST-IN-PLACE REINFORCED CONCRETE DOUBLE BOX CULVERT
S-07-04 TO -08	RESERVED
S-07-09	AERIAL CROSSING PIPELINE "I"
S-07-10	AERIAL CROSSING PIPELINE "A" ABUTMENT - PLANS, SECTIONS AND DETAILS
S-07-11	AERIAL CROSSING PIPELINE "I" PLANS AND ELEVATION
S-07-12	AERIAL CROSSING PIPELINE "I" SECTIONS AND DETAILS
S-07-13	AERIAL CROSSING PIPELINE "A" SECTIONS AND DETAILS
S-07-14	AERIAL CROSSING PIPELINE "I" PIPE SUPPORT AND LOCATIONS
S-07-15	AERIAL CROSSING PIPELINE "I" SECTIONS AND DETAILS

08 - TRANSWESTERN BENCH

DRAWING NUMBER	DRAWING TITLE
C-08-00	TRANSWESTERN BENCH CIVIL LEGEND NOTES AND ABBREVIATIONS
C-08-01	TRANSWESTERN BENCH SITE DEMOLITION PLAN
C-08-02	TRANSWESTERN BENCH SITE IMPROVMENTS PLAN
C-08-03	TRANSWESTERN BENCH SITE UTILITIES PLAN
C-08-04	TRANSWESTERN BENCH STORM DRAINAGE PLAN
C-08-05	TRANSWESTERN BENCH SITE GRADING PLAN
C-08-06	TRANSWESTERN BENCH CIVIL DETAIL SHEET
C-08-07	TRANSWESTERN BENCH CIVIL DETAIL SHEET
C-08-08	TRANSWESTERN BENCH CIVIL DETAIL SHEET
C-08-09	TRANSWESTERN BENCH STORM DRAINAGE PROFILE
C-08-10	TRANSWESTERN BENCH RETAINING WALL PROFILE
C-08-11	TRANSWESTERN BENCH 90% GRADING PLAN
C-08-12	TRANSWESTERN BENCH ERROSION AND SEDIMENT CONTROL PLAN
C-08-13	RESERVED
C-08-20	TW BENCH SEPTIC TANK SYSTEM
A-08-01	ARCHITECTURAL CODE SITE PLAN
A-08-02	OPERATIONS BUILDING CODE SUMMARY SHEET
A-08-03	OPERATIONS BUILDING FLOOR PLAN
A-08-04	OPERATIONS BUILDING ROOF PLAN
A-08-05	OPERATIONS BUILDING CEILING PLAN
A-08-06	OPERATIONS BUILDING EXTERIOR ELEVATIONS
A-08-07	OPERATIONS BUILDING INTERIOR ELEVATIONS
A-08-08	OPERATIONS BUILDING SECTIONS
A-08-09	OPERATIONS BUILDING WALL TYPES & SECTIONS
A-08-10	OPERATIONS BUILDING DETAILS
A-08-11	OPERATIONS BUILDING SCHEDULES
A-08-12	CARBON AMENDMENT BUILDING CODE SUMMARY SHEET
A-08-13	CARBON AMENDMENT BUILDING PLANS AND SECTIONS
A-08-14	CARBON AMENDMENT BUILDING EXTERIOR ELEVATIONS AND SECTIONS
S-08-01	STRUCTURAL GENERAL NOTES
S-08-02	STRUCTURAL GENERAL NOTES CONT.
S-08-03	STRUCTURAL QA & SPECIAL INSPECTIONS
S-08-04	OPERATIONS BUILDING FOUNDATION PLAN
S-08-05	OPERATIONS BUILDING LOWER ROOF FRAMING PLAN
S-08-06	OPERATIONS BUILDING HIGH ROOF FRAMING PLAN
S-08-07	OPERATIONS BUILDING ELEVATIONS
S-08-08	CARBON AMENDMENT BUILDING SECTION AND PLANS
S-08-09	STRUCTURAL DETAILS
S-08-10	STRUCTURAL DETAILS
S-08-11	TRANSWESTERN BENCH STORAGE TANK FOUNDATION
M-08-01	TWB CARBON AMENDMENT BUILDING MECHANICAL LAYOUT
M-08-02	TWB CARBON AMENDMENT BUILDING SECTIONS AND DETAILS SHEET 1 OF 2

08 - TRANSWESTERN BENCH

DRAWING NUMBER	DRAWING TITLE
M-08-03	TWB CARBON AMENDMENT BUILDING SECTIONS AND DETAILS SHEET 2 OF 2
M-08-04	TW BENCH CARBON SUBSTRATE STORAGE TANK MECHANICAL DETAILS
M-08-05	MECHANICAL AND PLUMBING LEGEND & ABBREVIATIONS
M-08-06	TRANSWESTERN BENCH OPERATIONS BUILDING MECHANICAL T24 FORMS
M-08-07	TRANSWESTERN BENCH OPERATIONS BUILDING MECHANICAL T24 FORMS
M-08-08	TRANSWESTERN BENCH OPERATIONS BUILDING HVAC PLAN
M-08-09	TRANSWESTERN BENCH OPERATIONS BUILDING HVAC SECTIONS
P-08-01	TRANSWESTERN BENCH OPERATIONS BUILDING WATER AND SANITARY SEWER
F-08-01	TRANSWESTERN BENCH OPERATIONS BUILDING FIRE SPRINKLER PIPING PLAN
E-08-01	TRANSWESTERN BENCH ELECTRICAL SITE PLAN
E-08-02	TRANSWESTERN BENCH PARTIAL ELECTRICAL SITE PLAN
E-08-03	TRANSWESTERN BENCH BUILDING POWER PLAN
E-08-04	TRANSWESTERN BENCH OPERATIONS BUILDING LIGHTING & RECEPTACLE PLAN
E-08-05	TRANSWESTERN BENCH SECURITY PLAN
E-08-06	TRANSWESTERN BENCH PANELBOARD SCHEDULES
E-08-07	RESERVED
E-08-08	TW BENCH CARBON AMENDMENT BUILDING ELECTRICAL PLAN
E-08-09	TW BENCH CARBON AMENDMENT BUILDING LIGHTING PLAN
E-08-10	RESERVED
E-08-11	TRANSWESTERN BENCH CARBON AMENDMENT BUILDING ELECTRICAL SCHEDULES
I-08-01	TRANSWESTERN BENCH CARBON AMENDMENT BUILDING P&ID SHEET 1 OF 2
I-08-02	TRANSWESTERN BENCH CARBON AMENDMENT BUILDING P&ID SHEET 2 OF 2
I-08-03	NODE 01 FIBER OPTIC NETWORK
I-08-04	NODE 01 PLC PANELS INSTRUMENTATION CONNECTION SHEET 1 OF 3
I-08-05	NODE 01 PLC PANELS INSTRUMENTATION CONNECTION SHEET 2 OF 3
I-08-06	NODE 01 PLC PANELS INSTRUMENTATION CONNECTION SHEET 3 OF 3

09 - COMPRESSOR STATION PONDS

DRAWING NUMBER	DRAWING TITLE
G-09-01	COMPRESSOR STATION PONDS UPGRADES GENERAL NOTES
C-09-01	COMPRESSOR STATION PONDS UPGRADES TRENCH DETAILS
C-09-02	COMPRESSOR STATION PONDS UPGRADES TRENCH SECTIONS
C-09-03	COMPRESSOR STATION PONDS UPGRADES CONCRETE DETAILS
C-09-04	COMPRESSOR STATION PONDS UPGRADES CONDUIT DETAILS
C-09-05	COMPRESSOR STATION PONDS UPGRADES POLE AND GUY ANCHORING
A-09-01	COMPRESSOR STATION PONDS UPGRADES POND LAYOUT
A-09-02	COMPRESSOR STATION PONDS UPGRADES FRAMING PLANS
A-09-03	COMPRESSOR STATION PONDS UPGRADES DETAILS
M-09-01	COMPRESSOR STATION PONDS UPGRADES GENERATOR AND CONNECTOR PLAN
M-09-02	COMPRESSOR STATION PONDS UPGRADES AUXILIARY EQUIPMENT
M-09-03	COMPRESSOR STATION PONDS UPGRADES MECHANICAL SITE PLAN
M-09-04	COMPRESSOR STATION PONDS UPGRADES PONTOON PLAN AND DETAILS
M-09-05	COMPRESSOR STATION PONDS UPGRADES PONTOON ELEVATIONS
M-09-06	COMPRESSOR STATION PONDS UPGRADES PONTOON PUMP AND VALVES
M-09-07	COMPRESSOR STATION PONDS UPGRADES TEG & CONNECTION DETAILS
E-09-01	COMPRESSOR STATION PONDS UPGRADES ELECTRICAL NOTES
E-09-02	COMPRESSOR STATION PONDS UPGRADES ELECTRICAL SINGLE LINE DIAGRAM
E-09-03	COMPRESSOR STATION PONDS UPGRADES COMMUNICATION BLOCK DIAGRAM
E-09-04	COMPRESSOR STATION PONDS UPGRADES COMMUNICATIONS PANEL DETAILS
E-09-05	COMPRESSOR STATION PONDS UPGRADES AUX. EQUIPMENT DETAILS
E-09-06	COMPRESSOR STATION PONDS UPGRADES ELECTRICAL DISTRIBUTION PANEL

10 - TCS FACILITIES

DRAWING NUMBER	DRAWING TITLE
G-10-01	PROCESS SCHEMATIC SECONDARY CONTAINMENT FOR TCS/REMEDY PRODUCED WATER
C-10-01	TCS AREA GENERAL SITE PLAN
C-10-02	TCS AREA KEY MAP
C-10-03	TCS AREA 1 - FINISH GRADING AND PAVING PLAN
C-10-04	TCS AREA 2 - FINISH GRADING AND PAVING PLAN
C-10-05	TCS AREA 3 - FINISH GRADING AND PAVING PLAN
C-10-06	TCS AREA 4 - FINISH GRADING AND PAVING PLAN
C-10-07 TO -10	RESERVED
C-10-11	PIPE LAYOUT SHEET 1 OF 4
C-10-12	PIPE LAYOUT SHEET 2 OF 4
C-10-13	PIPE LAYOUT SHEET 3 OF 4
C-10-14	PIPE LAYOUT SHEET 4 OF 4
E-10-01	TCS AREA 2 ELECTRICAL SITE PLAN
E-10-02	TCS AREA 1 ELECTRICAL SITE PLAN
E-10-03	TCS AREA 4 ELECTRICAL SITE PLAN
E-10-04	TCS AREA 3 ELECTRICAL SITE PLAN
I-10-01	P&ID POWER DISTRIBUTION

11 - INFLUENT TANKS

DRAWING NUMBER	DRAWING TITLE
S-11-01	INFLUENT TANK FARM FOUNDATION PLAN
S-11-02	INFLUENT TANK FARM FLOOR PLAN
S-11-03	INFLUENT TANK FARM CANOPY PLAN AND SECTION
S-11-04	INFLUENT TANK FARM SECTIONS AND DETAILS
S-11-05	INFLUENT TANK FARM CANOPY SECTIONS AND DETAILS
M-11-01	INFLUENT TANK FARM PLAN
M-11-02	INFLUENT TANK FARM SECTIONS AND DETAILS 1
M-11-03	INFLUENT TANK FARM SECTIONS AND DETAILS 2
M-11-04	INFLUENT TANK FARM SECTIONS AND DETAILS 3
E-11-01	INFLUENT TANK FARM ELECTRICAL PLAN
E-11-02	INFLUENT TANK 1 SECTIONS ELECTRICAL PLAN
I-11-01	P&ID INFLUENT TANK 1
I-11-02	P&ID INFLUENT TANK 2
I-11-03	P&ID INFLUENT TANK 3
I-11-04	P&ID INFLUENT TANK 4

12 - REMEDY-PRODUCED WATER CONDITIONING PLANT

DRAWING NUMBER	DRAWING TITLE
G-12-01	PROCESS FLOW DIAGRAM REMEDY PRODUCED WATER CONDITIONING PLANT
G-12-02	REMEDY PRODUCED WATER MASS BALANCE
A-12-01	REMEDY PRODUCED WATER CONDITIONING PLANT CODE SUMMARY SHEET
A-12-02	REMEDY PRODUCED WATER CONDITIONING PLANT FLOOR PLANS
A-12-03	REMEDY PRODUCED WATER CONDITIONING PLANT ROOF PLAN & REFLECTED CEILING PLAN
A-12-04	REMEDY PRODUCED WATER CONDITIONING PLANT EXTERIOR ELEVATIONS
A-12-05	REMEDY PRODUCED WATER CONDITIONING PLANT BUILDING SECTIONS
A-12-06	REMEDY PRODUCED WATER CONDITIONING PLANT WALL SECTIONS
A-12-07	REMEDY PRODUCED WATER CONDITIONING PLANT ENLARGED PLANS & ELEVATIONS
A-12-08	REMEDY PRODUCED WATER CONDITIONING PLANT STAIR & DETAILS
A-12-09	REMEDY PRODUCED WATER CONDITIONING PLANT DETAILS
A-12-10	REMEDY PRODUCED WATER CONDITIONING PLANT SCHEDULES
S-12-01	REMEDY - PRODUCED WATER CONDITIONING PLANT FOUNDATION PLAN
S-12-02	REMEDY - PRODUCED WATER CONDITIONING PLANT FIRST FLOOR PLAN
S-12-03	REMEDY - PRODUCED WATER CONDITIONING PLANT SECOND FLOOR PLAN
S-12-04	REMEDY - PRODUCED WATER CONDITIONING PLANT ROOF FRAMING PLAN
S-12-05	REMEDY - PRODUCED WATER CONDITIONING PLANT WALL FRAMING ELEVATIONS
S-12-06	REMEDY - PRODUCED WATER CONDITIONING PLANT WALL FRAMING ELEVATIONS
S-12-07	REMEDY - PRODUCED WATER CONDITIONING PLANT BUILDING SECTION
S-12-08	REMEDY - PRODUCED WATER CONDITIONING PLANT BUILDING SECTION
S-12-09	REMEDY - PRODUCED WATER CONDITIONING PLANT BUILDING SECTION
S-12-10	REMEDY - PRODUCED WATER CONDITIONING PLANT SECTIONS AND DETAILS
S-12-11	REMEDY - PRODUCED WATER CONDITIONING PLANT SECTIONS AND DETAILS
S-12-12	REMEDY - PRODUCED WATER CONDITIONING PLANT SECTIONS AND DETAILS
S-12-13	REMEDY - PRODUCED WATER CONDITIONING PLANT SECTIONS AND DETAILS
S-12-14	REMEDY - PRODUCED WATER CONDITIONING PLANT SECTIONS AND DETAILS
S-12-15	REMEDY - PRODUCED WATER CONDITIONING PLANT BEAM AND PILASTER SCHEDULE
S-12-16	REMEDY - PRODUCED WATER CONDITIONING PLANT BEAM AND PILASTER SCHEDULE
S-12-17	REMEDY - PRODUCED WATER CONDITIONING PLANT PLAN, SECTIONS AND DETAILS
S-12-18	REMEDY - PRODUCED WATER CONDITIONING PLANT BUILDING REINFORCING PLAN
S-12-19	REMEDY - PRODUCED WATER CONDITIONING PLANT BUILDING SECTIONS AND DETAILS
S-12-20	REMEDY - PRODUCED WATER CONDITIONING PLANT BUILDING SECTIONS AND DETAILS
S-12-21	REMEDY - PRODUCED WATER CONDITIONING PLANT EQUIP. PAD - PLAN, SECTIONS AND DETAILS
S-12-22	SWITCH GEAR CANOPY PLANS
S-12-23	SWITCH GEAR CANOPY FRAMING ELEVATIONS
S-12-24	SWITCH GEAR CANOPY SECTIONS
S-12-25	SWITCH GEAR CANOPY SECTIONS AND DETAILS
M-12-01	REMEDY - PRODUCED WATER CONDITIONING PLANT FIRST FLOOR PLAN
M-12-02	REMEDY - PRODUCED WATER CONDITIONING PLANT SECOND FLOOR PLAN
M-12-03	REMEDY - PRODUCED WATER CONDITIONING PLANT SECTIONS
M-12-04	REMEDY - PRODUCED WATER CONDITIONING PLANT HVAC & PLUMBING DETAILS
M-12-05	REMEDY - PRODUCED WATER CONDITIONING PLANT HVAC & PLUMBING 1ST FLOOR PLAN
M-12-06	REMEDY - PRODUCED WATER CONDITIONING PLANT HVAC & PLUMBING 2ND FLOOR PLAN
M-12-07	REMEDY - PRODUCED WATER CONDITIONING PLANT POTABLE WATER
E-12-01	REMEDY PRODUCED WATER CONDITIONING PLANT MCC ONE-LINE & ELEVATION
E-12-02	REMEDY PRODUCED WATER CONDITIONING PLANT FVNR ELEMENTARY DIAGRAM
E-12-03	REMEDY PRODUCED WATER CONDITIONING PLANT VFD ELEMENTARY DIAGRAM
E-12-04	REMEDY PRODUCED WATER CONDITIONING PLANT CONTROL PANEL ELEVATION
E-12-05	REMEDY PRODUCED WATER CONDITIONING PLANT CONTROL PANEL BACKPAN LAYOUT
E-12-06	REMEDY PRODUCED WATER CONDITIONING PLANT POWER DISTRIBUTION DIAGRAM
E-12-07	REMEDY PRODUCED WATER CONDITIONING PLANT EXAMPLE PLC I/O WIRING DIAGRAMS
E-12-08	REMEDY PRODUCED WATER COMMUNICATION PANEL ELEVATION & LAYOUT
E-12-09	REMEDY PRODUCED WATER COMMUNICATION PANEL SCHEMATIC
E-12-10	REMEDY PRODUCED WATER RADIO COMMUNICATION PANEL ELEVATION AND LAYOUT

DRAWING INDEX

DRAFT
NOT FOR
CONSTRUCTION

CH2MHILL®

NO.	DATE	DESCRIPTION	GM/SPEC	DWN	CHKD	SUPV	APVD BY
3	2/2/15	SUPPLEMENTAL PRE-FINAL (90%) DESIGN		JU	JP	CH	CH
2	9/8/14	PRE-FINAL (90%) DESIGN		JU	JP	CH	CH
1	4/5/13	INTERMEDIATE (60%) DESIGN		JU	JP	CH	CH
0	11/18/11	PRELIMINARY (30%) DESIGN		JU	JP	CH	CH

REVISIONS

APPROVED BY: NB

SO
SUPV
DSGN JP
DWN JU
CHKD JU
OK CH
DATE 2/2/15
SCALES

TOPOCK GROUNDWATER REMEDIATION PROJECT
GENERAL
DRAWING INDEX 2
GAS TRANSMISSION & DISTRIBUTION
PACIFIC GAS AND ELECTRIC COMPANY
SAN FRANCISCO, CALIFORNIA

MICROFILM
BILL OF MATL
DWG LIST
SUPSDS
SUPSD BY
SHEET NO. G-00-04 of SHEETS
REV 3

FILENAME: CH-G-00-004.dgn
PLOT DATE: 2015\01\19 PLOT TIME: 11:14:34 AM
N1808
FILENAME: .DGN - -04

12 - REMEDY-PRODUCED WATER CONDITIONING PLANT

DRAWING NUMBER	DRAWING TITLE
E-12-11	REMEDY PRODUCED WATER CONDITIONING PLANT PANELBOARD SCHEDULES
E-12-12 TO -19	RESERVED
E-12-20	REMEDY PRODUCED WATER CONDITIONING PLANT 1st FLOOR POWER & CONTROL PLAN
E-12-21	REMEDY PRODUCED WATER CONDITIONING PLANT 1st FLOOR LIGHTING AND RECEPTACLE PLAN
E-12-22	REMEDY PRODUCED WATER CONDITIONING PLANT 2nd FLOOR POWER & CONTROL PLAN
E-12-23	REMEDY PRODUCED WATER CONDITIONING PLANT 2nd FLOOR LIGHTING AND RECEPTACLE PLAN
E-12-24	TCS EXISTING WATER STORAGE TANK AREA PLAN
I-12-01	P&ID FILTER SYSTEM A SIDE
I-12-02	P&ID FILTER SYSTEM B SIDE
I-12-03	P&ID CAUSTIC AND COAGULANT SYSTEM
I-12-04	P&ID ACID AND DEWATERING AID SYSTEMS
I-12-05	P&ID LIQUID PHASE SEPARATOR & AIR COMPRESSOR

13 - FRESHWATER STORAGE AND CONTINGENT FWPTS

DRAWING NUMBER	DRAWING TITLE
G-13-01	PROCESS SCHEMATIC FOR FRESH WATER PRE-INIECTION TREATMENT SYSTEM
G-13-02	MASS BALANCE FRESH WATER PRE-INJECTION TREATMENT SYSTEM
A-13-01	FRESHWATER PRE-INJECTION TREATMENT SYSTEM CODE SUMMARY SHEET
A-13-02	FRESHWATER PRE-INJECTION TREATMENT SYSTEM FLOOR PLANS
A-13-03	FRESHWATER PRE-INJECTION TREATMENT SYSTEM ROOF PLAN
A-13-04	FRESHWATER PRE-INJECTION TREATMENT SYSTEM EXTERIOR ELEVATIONS
A-13-05	FRESHWATER PRE-INJECTION TREATMENT SYSTEM BUILDING SECTIONS
S-13-01	FRESHWATER PRE-INJECTION TREATMENT SYSTEM BUILDING - FOUNDATION PLAN
S-13-02	FRESHWATER PRE-INJECTION TREATMENT SYSTEM BUILDING - FIRST FLOOR PLAN
S-13-03	FRESHWATER PRE-INJECTION TREATMENT SYSTEM BUILDING - SECOND FLOOR FRAMING PLAN # EL. 639.50
S-13-04	FRESHWATER PRE-INJECTION TREATMENT SYSTEM BUILDING - SECOND FLOOR PLAN
S-13-05	FRESHWATER PRE-INJECTION TREATMENT SYSTEM BUILDING - ROOF PLAN
S-13-06	FRESHWATER PRE-INJECTION TREATMENT SYSTEM BUILDING - SECTION
S-13-07	FRESHWATER PRE-INJECTION TREATMENT SYSTEM BUILDING - SECTIONS AND DETAILS
S-13-08	FRESHWATER PRE-INJECTION TREATMENT SYSTEM BUILDING - SECTIONS AND DETAILS
S-13-09	FRESHWATER PRE-INJECTION TREATMENT SYSTEM BUILDING - SECTIONS AND DETAILS
S-13-10	FRESHWATER PRE-INJECTION TREATMENT SYSTEM BUILDING - SECTIONS AND DETAILS
S-13-11	CHEMICAL STORAGE AREA - FOUNDATION , FLOOR AND ROOF PLAN
S-13-12	CHEMICAL STORAGE AREA - SECTIONS AND DETAILS
S-13-13	CHEMICAL STORAGE AREA - SECTIONS AND DETAILS
S-13-14	BACKWASH AND TREATED WATER STORAGE TANKS - PLAN
S-13-15	BACKWASH AND TREATED WATER STORAGE TANKS - SECTIONS AND DETAILS
M-13-00	FRESHWATER PRE-INJECTION TREATMENT SYSTEM EQUIPMENT GENERAL ARRANGEMENT
M-13-01	FRESHWATER PRE-INJECTION TREATMENT MEDIA VESSEL SYSTEM LOWER PLAN
M-13-02	FRESHWATER PRE-INJECTION TREATMENT MEDIA VESSEL SYSTEM UPPER PLAN
M-13-03	FRESHWATER PRE-INJECTION TREATMENT MEDIA VESSEL SYSTEM SECTIONS
M-13-04	FRESHWATER PRE-INJECTION TREATMENT MEDIA SYSTEM ISOMETRIC
M-13-05	RESERVED
M-13-06	FRESHWATER PRE-INJECTION TREATMENT CHEMICAL SYSTEMS PLAN
M-13-07	FRESHWATER PRE-INJECTION TREATMENT CHEMICAL SYSTEMS SECTIONS
M-13-08	FRESHWATER PRE-INJECTION TREATMENT PROCESS TANKS PLAN
M-13-09	FRESHWATER PRE-INJECTION TREATMENT PROCESS TANKS ELEVATION & SECTIONS
E-13-01	FRESHWATER PRE-INJECTION TREATMENT SYSTEM MCC ONE-LINE AND ELEVATION
E-13-02	FRESHWATER PRE-INJECTION TREATMENT SYSTEM FVNR ELEMENTRY DIAGRAM
E-13-03	FRESHWATER PRE-INJECTION TREATMENT SYSTEM VFD ELEMENTARY DIAGRAM
E-13-04	FRESHWATER PRE-INJECTION TREATMENT SYSTEM CONTROL PANEL ELEVATION
E-13-05	FRESHWATER PRE-INJECTION TREATMENT SYSTEM CONTROL PANEL BACKPAN LAYOUT
I-13-01	P&ID FWPI TREATMENT SYSTEM PRE-FILTERS
I-13-02	P&ID FWPI TREATMENT SYSTEM MEDIA VESSELS
I-13-03	P&ID FWPI TREATMENT SYSTEM CHEMICAL STORAGE 1
I-13-04	P&ID FWPI TREATMENT SYSTEM CHEMICAL STORAGE 2
I-13-05	P&ID FWPI TREATMENT SYSTEM BACKWASH SYSTEM
I-13-06	P&ID FWPI TREATMENT SYSTEM TREATED WATER

14 - CONDITIONED WATER TANKS

DRAWING NUMBER	DRAWING TITLE
S-14-01	CONDITIONED WATER STORAGE TANK MECHANICAL PLAN AND DETAILS
S-14-02	CONDITIONED WATER STORAGE TANK SECTIONS AND DETAILS
S-14-03	CONDITIONED WATER STORAGE TANK SECTIONS AND DETAILS
S-14-04	CONDITIONED WATER STORAGE TANK SECTIONS AND DETAILS
S-14-05	CONDITIONED WATER STORAGE TANK SECTIONS AND DETAILS
S-14-06	CONDITIONED WATER STORAGE TANK CATHODIC PROTECTION
S-14-07	CONDITIONED WATER STORAGE TANK CATHODIC PROTECTION
S-14-08	CONDITIONED WATER STORAGE TANK - RETAINING WALL - PLAN AND SECTIONS
S-14-09	CONDITIONED WATER STORAGE TANK - RETAINING WALL - ELEVATION
S-14-10	CONDITIONED WATER STORAGE TANK FARM - FOUNDATION AND FLOOR PLANS
S-14-11	CONDITIONED WATER STORAGE TANK FARM - CANOPY PLAN AND SECTIONS
S-14-12	CONDITIONED WATER STORAGE TANK FARM - SECTIONS AND DETAILS
S-14-13	CONDITIONED WATER STORAGE TANK FARM - SECTIONS AND DETAILS
M-14-01	CONDITIONED WATER STORAGE TANK FARM PLAN
M-14-02	CONDITIONED WATER STORAGE TANK FARM SECTIONS
M-14-03	CONDITIONED WATER STORAGE TANK FARM SECTIONS AND DETAILS
E-14-01	CONDITIONED WATER TANK FARM ELECTRICAL PLAN
E-14-02	CONDITIONED WATER STORAGE TANK ELECTRICAL PLAN
I-14-01	P&ID CONDITIONED WATER STORAGE TANK FARM A SIDE
I-14-02	P&ID CONDITIONED WATER B SIDE

15 - PARK MOABI FACILITIES

DRAWING NUMBER	DRAWING TITLE
G-15-01	CONSTRUCTION HEADQUARTERS PROCESS FLOW DIAGRAM
C-15-01	CONSTRUCTION HEADQUARTERS SITE PLAN
C-15-02	CONSTRUCTION HEADQUARTERS UTILITY CONNECTIONS
C-15-03	CONSTRUCTION HEADQUARTERS PIPING PLAN
C-15-04	CONSTRUCTION HEADQUARTERS SECURITY PLAN
C-15-05	PARK MOABI SOIL STAGING AND STORAGE SITE PLAN
C-15-06	CONSTRUCTION HEADQUARTERS CIVIL DETAILS
C-15-07	CONSTRUCTION HEADQUARTERS TRENCH SECTIONS
S-15-01	WORKSHOP BUILDING GENERAL NOTES
S-15-02	WORKSHOP BUILDING AXONOMETRIC VIEWS
S-15-03	WORKSHOP BUILDING ELEVATIONS (1 OF 2)
S-15-04	WORKSHOP BUILDING ELEVATIONS (2 OF 2)
S-15-05	WORKSHOP BUILDING FOUNDATION PLAN
S-15-06	WORKSHOP BUILDING FINISH FLOOR PLAN
S-15-07	WORKSHOP BUILDING ROOF PLAN
S-15-08	WORKSHOP BUILDING SECTION – TYPICAL FRAME
S-15-09	WORKSHOP BUILDING SECTION
S-15-10	WORKSHOP BUILDING SECTIONS AND DETAILS (1 OF 2)
S-15-11	WORKSHOP BUILDING SECTIONS AND DETAILS (2 OF 2)
S-15-12	WORKSHOP BUILDING TYPICAL DETAILS
S-15-13	PARKING SUN SHADE FOUNDATION PLAN
S-15-14	PARKING SUN SHADE ROOF FRAMING PLAN
S-15-15	PARKING SUN SHADE ROOF PLAN
S-15-16	PARKING SUN SHADE SECTIONS
S-15-17	PARKING SUN SHADE DETAILS
S-15-18	UTILITY PAD PLANS
S-15-19	UTILITY PAD DETAILS
S-15-20	DECONTAMINATION PAD PLAN AND DETAILS
M-15-01	WORKSHOP BUILDING– HVAC PLAN
P-15-01	PLUMBING FLOOR PLAN - DWV
P-15-02	PLUMBING SCHEMATIC - DWV
P-15-03	PLUMBING FLOOR PLAN - DOMESTIC HOT AND COLD WATER
P-15-04	PLUMBING SCHEMATIC - DOMESTIC HOT AND COLD WATER
F-15-01	CONSTRUCTION HEADQUARTERS FIRE SUPPRESSION YARD PLAN
F-15-02	WORKSHOP FIRE PROTECTION PLAN (1 OF 3)
F-15-03	WORKSHOP FIRE PROTECTION PLAN (2 OF 3)
F-15-04	WORKSHOP FIRE PROTECTION PLAN (3 OF 3)
E-15-01	CONSTRUCTION HEADQUARTERS SINGLE LINE DIAGRAM
E-15-02	CONSTRUCTION HEADQUARTERS SOLAR SINGLE LINE DIAGRAM
E-15-03	CONSTRUCTION HEADQUARTERS ELECTRICAL PLAN
E-15-04	UTILITY PAD ELECTRICAL PLAN
E-15-05	WORKSHOP BUILDING ELECTRICAL PLAN
E-15-06	WORKSHOP BUILDING LIGHTING PLAN (1 OF 2)
E-15-07	WORKSHOP BUILDING LIGHTING PLAN (2 OF 2)
E-15-08	WORKSHOP BUILDING ELECTRICAL SCHEDULES

16 - MONITORING WELLS

DRAWING NUMBER	DRAWING TITLE
C-16-01	MONITORING WELLS WELL DESIGNS
C-16-02	MONITORING WELLS PROPRIETARY MULTI-LEVEL WELL DESIGNS
C-16-03	MONITORING WELLS WELL HEAD DESIGNS
E-16-01	MONITORING WELLS DATA COLLECTION STATIONS SITE PLAN
E-16-02	DATA COLLECTION PANEL MONITORING WELL ELEVATION (TYPICAL)
E-16-03	DATA COLLECTION PANEL RADIO MONITORING WELL ELEVATION (TYPICAL)
E-16-04	MONITORING WELL DATA COLLECTION SYSTEM SHEET 1
E-16-05	MONITORING WELL DATA COLLECTION SYSTEM SHEET 2
E-16-06	MONITORING WELL DATA COLLECTION SYSTEM SHEET 3
E-16-07	MONITORING WELL DATA COLLECTION SYSTEM SHEET 4
E-16-08	MONITORING WELL DATA COLLECTION SYSTEM SHEET 5
E-16-09	MONITORING WELL DATA COLLECTION SYSTEM SHEET 6
E-16-10	MONITORING WELL DATA COLLECTION SYSTEM SHEET 7
E-16-11	MONITORING WELL DATA COLLECTION SYSTEM SHEET 8
E-16-12	MONITORING WELL DATA COLLECTION SYSTEM SHEET 9
E-16-13	MONITORING WELL DATA COLLECTION SYSTEM SHEET 10
E-16-14	MONITORING WELL DATA COLLECTION SYSTEM SHEET 11
E-16-15	MONITORING WELL DATA COLLECTION SYSTEM SHEET 12
E-16-16	MONITORING WELL DATA COLLECTION SYSTEM SHEET 13
E-16-17	MONITORING WELL DATA COLLECTION SYSTEM SHEET 14
E-16-18	MONITORING WELL DATA COLLECTION SYSTEM SHEET 15
E-16-19	MONITORING WELL DATA COLLECTION SYSTEM SHEET 16
E-16-20	MONITORING WELL DATA COLLECTION SYSTEM SHEET 17
E-16-21	MONITORING WELL DATA COLLECTION SYSTEM SHEET 18
E-16-22	MONITORING WELL DATA COLLECTION SYSTEM SHEET 19
E-16-23	MONITORING WELL DATA COLLECTION SYSTEM SHEET 20
E-16-24	MONITORING WELL DATA COLLECTION SYSTEM SHEET 21
E-16-25	MONITORING WELL DATA COLLECTION SYSTEM SHEET 22

DRAFT
NOT FOR
CONSTRUCTION

DRAWING INDEX

CH2MHILL®

NO.	DATE	DESCRIPTION	GM/SPEC	DWN	CHKD	SUPV	APVD BY
3	2/2/15	SUPPLEMENTAL PRE-FINAL (90%) DESIGN		JU	JP	CH	CH
2	9/8/14	PRE-FINAL (90%) DESIGN		JU	JP	CH	CH
1	4/5/13	INTERMEDIATE (60%) DESIGN		JU	JP	CH	CH
0	11/18/11	PRELIMINARY (30%) DESIGN		JU	JP	CH	CH

REVISIONS

APPROVED BY: NB

SO	
SUPV	
DSGN	JP
DWN	JU
CHKD	JU
OK	CH
DATE	2/2/15
SCALES	

TOPOCK GROUNDWATER REMEDIATION PROJECT
GENERAL
DRAWING INDEX 3

GAS TRANSMISSION & DISTRIBUTION
PACIFIC GAS AND ELECTRIC COMPANY
SAN FRANCISCO, CALIFORNIA

MICROFILM
BILL OF MATL
DWG LIST
SUPSDS
SUPSD BY
SHEET NO. of SHEETS
G-00-05
REV 3

FILENAME: CH-G-00-005.dgn
PLOT DATE: 2015\01\19 PLOT TIME: 11:27:33 AM

N1808

FILENAME: .DGN - -04

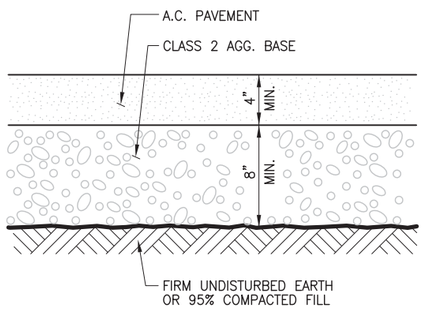

1 PAVEMENT DETAIL (TYP)
N.T.S.

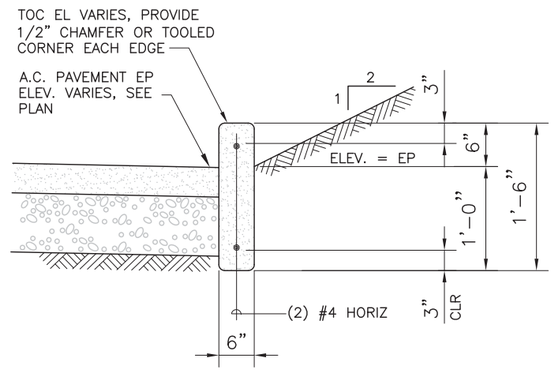

2 CONCRETE CURB
N.T.S.

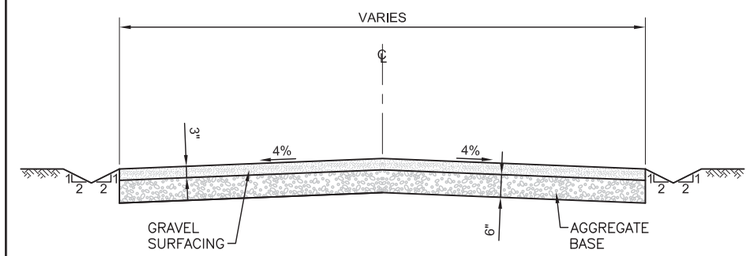

3 GRAVEL ENTRANCE ROAD SECTION
N.T.S.

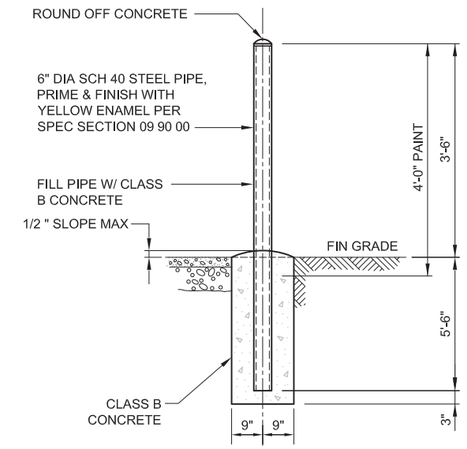

4 FIXED GUARD POST DETAIL
N.T.S.

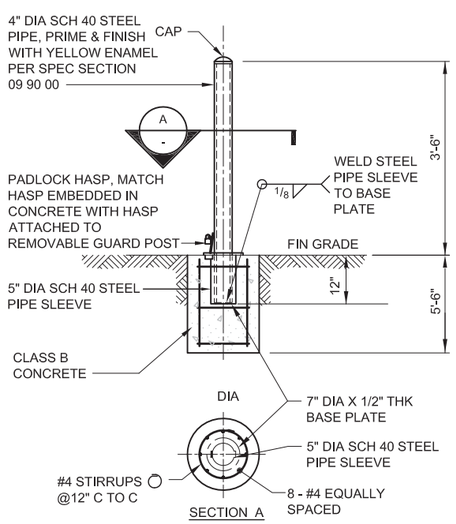

5 REMOVABLE GUARD POST DETAIL
N.T.S.

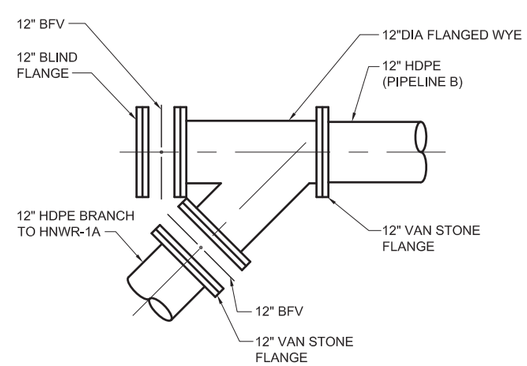

NOTE:
THIS DETAIL APPLIES IF
PIPELINE B IS NOT
EXTENDED TO SITE B.

6 TERMINATION DETAIL FOR PIPELINE B
N.T.S.

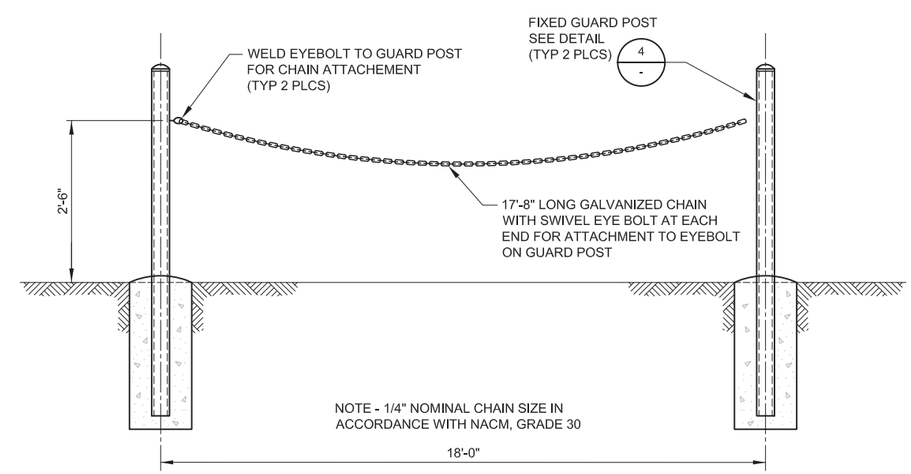

7 CABLE AND POST ACCESS GATE
N.T.S.

DRAFT
NOT FOR
CONSTRUCTION

E2 Consulting Engineers, Inc.
1900 Powell Street, Ste. 250
Emeryville, CA 94608
(510) 652-1164

CH2MHILL®

NO.	DATE	DESCRIPTION	GM/SPEC	DWN	CHKD	SUPV	APVD BY
1	12/30/14	SUPPLEMENTAL PRE-FINAL (90%) DESIGN		MD	PT	VMB	VMB
0	9/8/14	PRE-FINAL (90%) DESIGN		PH	PT	PT	VMB

REVISIONS

APPROVED BY: SO
SUPV VMB
DSGN PT
DWN PH
CHKD VMB
OK VMB
DATE 12/30/14
SCALES NTS

TOPOCK GROUNDWATER REMEDIATION PROJECT
CIVIL DETAILS

GAS TRANSMISSION & DISTRIBUTION
PACIFIC GAS AND ELECTRIC COMPANY
SAN FRANCISCO, CALIFORNIA

MICROFILM
BILL OF MATL
DWG LIST
SUPSDS
SUPSD BY
SHEET NO. of SHEETS
C-00-05
REV 1

FILENAME: E2-C-XXX-0005.dwg
PLOT DATE: $PLOTDATE PLOT TIME: $PLOTTIME

GENERAL STRUCTURAL NOTES

GENERAL

GOVERNING CODES

CALIFORNIA BUILDING CODE (CBC), 2013 AS AMENDED BY SAN BERNARDINO COUNTY
ASCE 7-10 MINIMUM DESIGN LOADS FOR BUILDING AND OTHER STRUCTURE
AWWA STANDARD D-100 (2011)

INTENT OF GENERAL STRUCTURAL NOTES

THE INTENT OF THESE GENERAL STRUCTURAL NOTES IS TO DEFINE DESIGN PARAMETERS (LOADS AND ALLOWABLE STRESSES) FOR ALL STRUCTURES AND MATERIALS USED. SPECIFICATIONS CONTAINING MATERIALS AND INSTALLATION ARE A PART OF THIS JOB AND ARE CONTAINED ELSEWHERE.

DESIGN

THE STRUCTURES ARE DESIGNED TO BE STABLE AND SELF- SUPPORTING WHEN ERECTED AND FULLY COMPLETED. IT IS THE RESPONSIBILITY OF THE CONTRACTOR TO DETERMINE THE ERECTION PROCEDURE, INCLUDING SEQUENCE OF CONSTRUCTION, AND TO INSURE THE SAFETY OF THE STRUCTURES DURING THE CONSTRUCTION PHASE, INCLUDING THE DESIGN AND SAFETY OF ANY TEMPORARY BRACING OR OTHER MEASURES WHICH MAY BE NECESSARY TO FACILITATE AND COMPLETE CONSTRUCTION.

LIVE LOADS

DESIGN LIVE LOADS FOR THE STRUCTURES ARE AS FOLLOWS:

STAIRS	- 100 PSF
CONCRETE FLOOR ON GRADE	- 500 PSF OR H20 TRUCK
ELEVATED CONCRETE FLOOR	- 200 PSF OR 4 KIPS FORKLIFT
ROOF	- 20 PSF
CAT WALK @ AERIAL CROSSING	=25 PSF

WIND LOADS

DESIGN HORIZONTAL WIND LOADS ON VERTICAL SURFACES:

20 PSF (MINIMUM)
WIND SPEED: 100 MPH
IMPORTANCE FACTOR: 1.25

SEISMIC LOADS

CBC, 2013 SITE CLASS: D
SEISMIC DESIGN CATEGORY: D

S_s = 0.230
S_1 = 0.120
S_{MS} = 0.368
S_{M1} = 0.279
S_{DS} = 0.245
S_{D1} = 0.168
IMPORTANCE FACTOR: 1.25

FOUNDATION

DESIGN SHALL BE BASED ON: GEOTECHNICAL INVESTIGATION REPORT, TOPOCK COMPRESSOR STATION BY CH2M HILL, 2004
FINAL WORKPLAN FOR TIME CRITICAL REMOVAL ACTION AT AOC4 DEBRIS RAVINE, PG&E TOPOCK COMPRESSOR STATION, NEEDLES, CA BY CH2M HILL DEC,18, 2009

A) MAT FOUNDATION
ALLOW. SOIL BEARING PRESSURE = 4000 PSF

B) SPREAD FOUNDATION ALLOWABLE SOIL BEARING PRESSURE = 4,000 PSF

GROUND WATER ELEVATION

STRUCTURES ARE DESIGNED FOR A HIGH GROUND WATER LEVEL AT EL. 465.30.

COORDINATION OF WORK

MECHANICAL FRAMING, OPENINGS AND SUPPORTS FOR EQUIPMENT OR OTHER PROCESS ITEMS ARE SHOWN FOR BIDDING PURPOSES ONLY. THE EXACT SIZE AND LOCATION OF SUCH ITEMS SHALL BE VERIFIED FROM MANUFACTURER'S APPROVED SHOP DRAWINGS AND BY COORDINATION OF SUCH WORK WITH THE PERTINENT TRADE.

MISCELLANEOUS

FOR LOCATIONS AND DETAIL OF PIPES, CONDUITS, DUCTS, AND OTHER OPENINGS IN SLABS AND WALLS, SEE SITEWORK, MECHANICAL, PLUMBING, HVAC, AND ELECTRICAL DRAWINGS.

CONCRETE

CONCRETE DESIGN DATA

CODE	- ACI 318-11 AND 350/350R-06 BUILDING CODES FOR REINFORCED CONCRETE
STRENGTH	- F_C' = 5,000 PSI UNLESS NOTED (SPEC. SECT. S-033000)
REINFORCING	- ASTM A615, GRADE 60
WELDED STEEL WIRE FABRIC	- ASTM A185 OR ASTM 497
DESIGN	- STRENGTH DESIGN METHOD OR ALTERNATE DESIGN METHOD
DETAILING	- ACI SP-66(04) ACI DETAILING MANUAL

STANDARD HOOKS

UNLESS OTHERWISE SHOWN OR NOTED, ALL 90-, 135- AND 180-DEGREE HOOKS FOR REINFORCING SHALL BE IN ACCORDANCE WITH THE STANDARD HOOK DETAILS SHOWN IN ACI SP-66(04).

REINFORCING BAR DEVELOPMENT

UNLESS OTHERWISE INDICATED ON THE DRAWINGS, REINFORCING BARS SHALL BE DEVELOPED AND/OR SPLICED IN ACCORDANCE WITH THE FOLLOWING TABLE:

BAR SIZE	Ld DEVELOPMENT LENGTH	TENSION LAP LAP SLICES * TOP BARS	OTHER BARS
4	2'-1"	2'-5"	2'-1"
5	2'-7"	3'-4"	2'-7"
6	3'-1"	4'-0"	3'-1"
7	4'-6"	5'-10"	4'-6"
8	5'-2"	6'-8"	5'-2"
9	5'-10"	7'-7"	5'-10"

*HORIZONTAL BARS SO PLACED THAT MORE THAN 12 IN. OF CONCRETE IS CAST IN THE MEMBER BELOW THE BAR.

CONCRETE PROTECTION FOR REINFORCEMENT

UNLESS NOTED OTHERWISE, THE CONCRETE COVER FOR REINFORCING BARS PLACED IN SURFACES EXPOSED TO WATER SHALL BE 2 INCHES. ALL OTHER MINIMUM COVER REQUIREMENTS SHALL BE AS PER ACI 318-11.

CONCRETE COATING SYSTEM

CONCRETE COATING SYSTEM IS NOT SHOWN ON DRAWINGS. FOR COATING SYSTEM REQUIREMENTS SEE SPECIFICATION SECTIONS 09 9000, 09 9005, 09 9635 AND 09 9726.

UTILITY VAULTS

UTILITY VAULTS WILL BE PRECAST CONCRETE SECTIONS CONFORMING TO PG&E STANDARD K-35.

COLOR

INTEGRALLY COLOR ALL CONCRETE SO THAT THE COLOR OF EXPOSED CONCRETE SURFACES MORE CLOSELY MATCHES THE SURROUNDING NATURAL COLORS. MATERIAL REQUIREMENTS ARE SPECIFIED. COORDINATE EXACT COLORS IN FIELD WITH OWNER.

STRUCTURAL STEEL

(SPEC. SECT. 055000)

DESIGN DATA

SPECIFICATIONS	- AISC MANUAL OF STEEL CONSTRUCTION, ALLOWABLE STRESS DESIGN, 13th EDITION
DESIGN	- AISC TYPE "2 SIMPLE

FRAMING CONSTRUCTION

WIDE FLANGE SHAPES	- ASTM A992 (fy = 50KSI)
CHANNELS, PLATES & ANGLES	- ASTM A36 (fy=36 KSI)
STRUCTURAL PIPES	- ASTM A53, GRADE B
STRUCTURAL TUBES	- ASTM A500, GRADE B (46 KSI)
WELDING	- AWS E70 ELECTRODES
HIGH STRENGTH BOLTS	- ASTM A325-SC CLASS A, 3/4 INCH DIAMETER UNLESS OTHERWISE NOTED. SUFFIX SC FOLLOWING ASTM DESIGNATION DENOTES A SLIP-CRITICAL CONNECTION
COMMON BOLTS	- ASTM A307, UNLESS OTHERWISE INDICATED
ANCHOR BOLTS	- A36 UNLESS OTHERWISE INDICATED
CHEMICAL ANCHORS (DBD)	- DBD (DIFFERED BOLTING DEVICES) S.S. TYPE 316, HILTI HVA ADHESIVE
EXPANSION ANCHORS	- HILTI S.S. KWIK-BOLT S.S. TYPE 316 ANCHORS OR APPROVED EQUAL. BOLTS, NUTS & WASHERS

STAINLESS STEEL

DESIGN DATA

SPECIFICATION	- ALLOY TYPES CONFORM TO ASTM A-167 & ASTM A-276
PLATES & SHAPES	- TYPE 316 UNLESS OTHERWISE NOTED
BOLTS, NUTS, & WASHERS	- TYPE 316

COMPOSITE FLOOR

TOTAL THICKNESS MINMUM 6 INCHES UNLESS OTHERWISE NOTED.

STEEL DECK: MINMUM 18 GAGE, 1 1/2 INCH DEEP x 36 INCH WIDE PANELS. RIBS SPACING @ 6" C/C (UNLESS OTHERWISE NOTED)

I + = 0.27 IN $^4/_{FT}$ S+ = 0.312 IN $^3/_{FT}$
I - = 0.28 IN $^4/_{FT}$ S- = 0.316 IN $^3/_{FT}$

CONCRETE: NORMAL WEIGHT CONCRETE WITH MINMUM f'c = 4,000 PSI UNLESS NOTED OTHERWISE

ALUMINUM

DESIGN DATA

CODES	- CALIFORNIA BUILDING CODE, 2013
SPECIFICATION	- ASTM - 6061-T6 ALLOY, UNLESS OTHERWISE NOTED.

MASONRY

DESIGN DATA

CODE - CALIFORNIA BUILDING CODE (2013)

HOLLOW LOAD BEARING - ASTM C90
F'M - COMPRESSIVE STRENGTH OF MASONRY AT 28 DAYS = 1,900 PSI

MORTAR - ASTM C270, CONFORM WITH CBC-2013, TYPE M, MINIMUM COMPRESSIVE STRENGTH AT 28 DAYS = 2,500 PSI

GROUT - ASTM 476, MINIMUM COMPRESSIVE STRENGTH AT 28 DAYS = 3,000 PSI

REINFORCING - ASTM 615, GRADE 60

COLD-DRAWN STEEL WIRE - ASTM 482

METAL ROOF

GALVANIZED, 18 GAGE 1 1/2" DEEP x 36" WIDE, RIBS @ 6" C/C

I = 0.29 IN $^4/_{LF}$

S+ = 0.315 IN $^3/_{LF}$

S- = 0.316 IN $^3/_{LF}$

METAL SIDING

GALVANIZED, 24 GAGE, 3/4-INCH HIGH x 36" WIDE, RIBS @ 6" C/C

I (+) = 0.0323 IN $^4/_{LF}$

I (-) = 0.0220 IN $^4/_{LF}$

S+ = 0.592 IN $^3/_{LF}$

S- = 0.0538 IN $^3/_{LF}$

DRAFT
NOT FOR
CONSTRUCTION

E2 Consulting Engineers, Inc.
1900 Powell Street, Ste. 250
Emeryville, CA 94608
(510) 652-1164

CH2MHILL®

REVISIONS

NO.	DATE	DESCRIPTION	GM/SPEC	DWN	CHKD	SUPV	APVD BY
2	12/30/14	SUPPLEMENTAL PRE-FINAL (90%) DESIGN		MD			
1	09/08/14	PRE-FINAL (90%) DESIGN		MD			
0	04/05/13	INTERMEDIATE (60%) DESGIN		MD	KJ	VMB	VMB

APPROVED BY

SO	
SUPV	VMB
DSGN	KDD
DWN	WTH
CHKD	VMB
OK	VMB
DATE	12/30/14
SCALES	NA

TOPOCK GROUNDWATER REMEDIATION PROJECT

GENERAL STRUCTURAL NOTES

GAS TRANSMISSION & DISTRIBUTION
PACIFIC GAS AND ELECTRIC COMPANY
SAN FRANCISCO, CALIFORNIA

MICROFILM
BILL OF MATL
DWG LIST
SUPSDS
SUPSD BY
SHEET NO. of SHEETS
S-00-01
REV 1

PLOT DATE: $PLOTDATE PLOT TIME: $PLOTTIME
FILENAME: INAL (90%) DESIGN

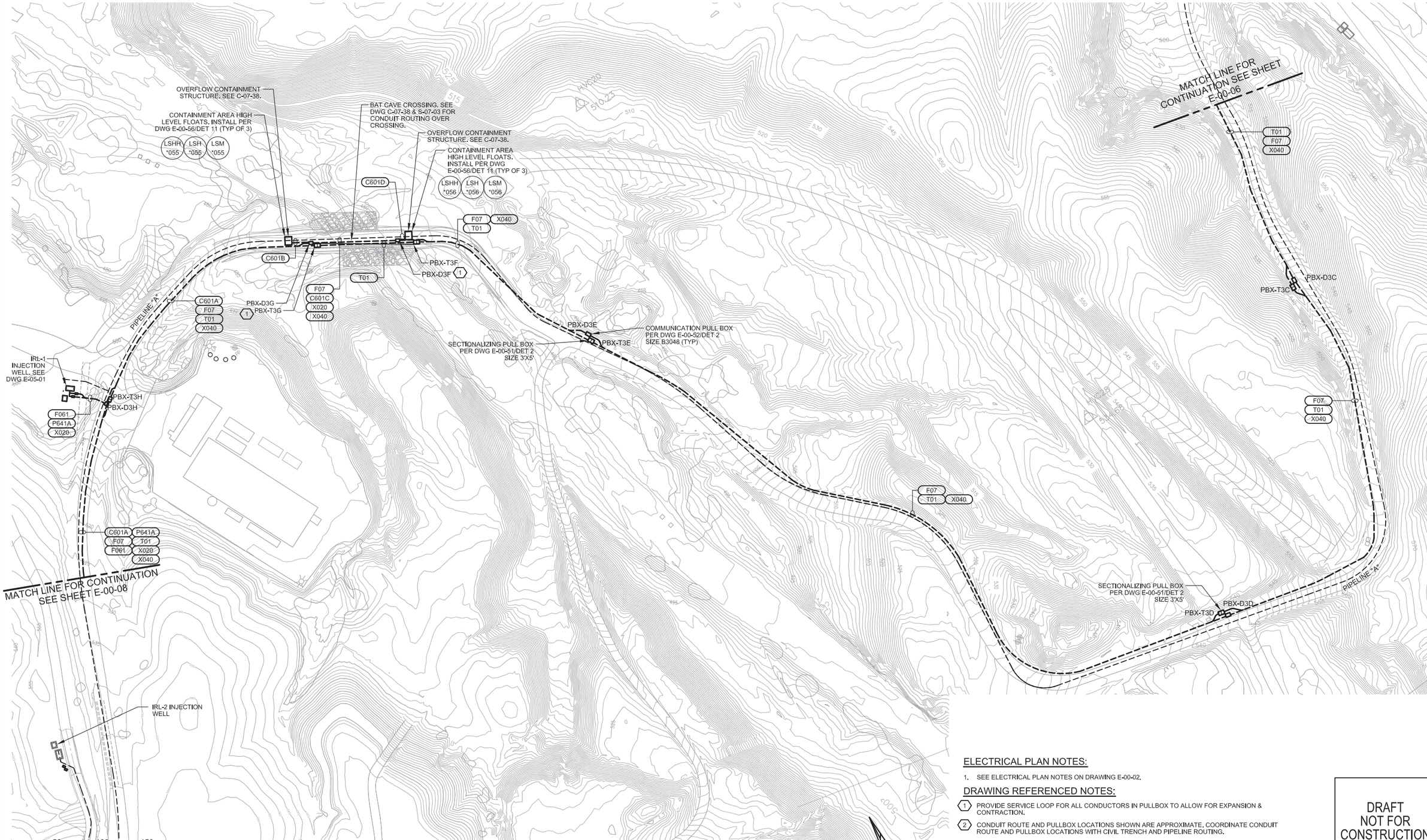

NORTHERN BAT CAVE WASH AREA PLAN (2)

ELECTRICAL PLAN NOTES:

1. SEE ELECTRICAL PLAN NOTES ON DRAWING E-00-02.

DRAWING REFERENCED NOTES:

(1) PROVIDE SERVICE LOOP FOR ALL CONDUCTORS IN PULLBOX TO ALLOW FOR EXPANSION & CONTRACTION.

(2) CONDUIT ROUTE AND PULLBOX LOCATIONS SHOWN ARE APPROXIMATE. COORDINATE CONDUIT ROUTE AND PULLBOX LOCATIONS WITH CIVIL TRENCH AND PIPELINE ROUTING.

DRAFT
NOT FOR
CONSTRUCTION

FRISCH ENGINEERING, INC.
CONSULTING ELECTRICAL ENGINEERS
13405 FOLSOM BLVD, UNIT 600
FOLSOM, CA 95630
PH 916 353 1025
WWW.FRISCHENGINEERING.COM

CH2MHILL®

NO.	DATE	DESCRIPTION	GM/SPEC	DWN	CHKD	SUPV	APVD BY
2	12/30/14	SUPPLEMENTAL PRE-FINAL (90%) DESIGN		MBY			TPF
1	9/8/14	PRE-FINAL (90%) DESIGN		MBY			TPF
0	4/5/13	INTERMEDIATE (60%) DESIGN		MBY			TPF

REVISIONS

APPROVED BY: TPF

SO
SUPV TPF
DSGN MBY
DWN MBY, NC
CHKD MF
OK TPF
DATE
SCALES N/A

TOPOCK GROUNDWATER REMEDIATION PROJECT
NORTHERN BAT CAVE WASH AREA PLAN
GAS TRANSMISSION & DISTRIBUTION
PACIFIC GAS AND ELECTRIC COMPANY
SAN FRANCISCO, CALIFORNIA

MICROFILM
BILL OF MATL
DWG LIST
SUPSDS
SUPSD BY
SHEET NO. of SHEETS
E-00-07
REV 2

FILENAME: FE-E-XXX-0002AD.dwg
PLOT DATE: Jan 09, 2015 PLOT TIME: 4:27:34pm

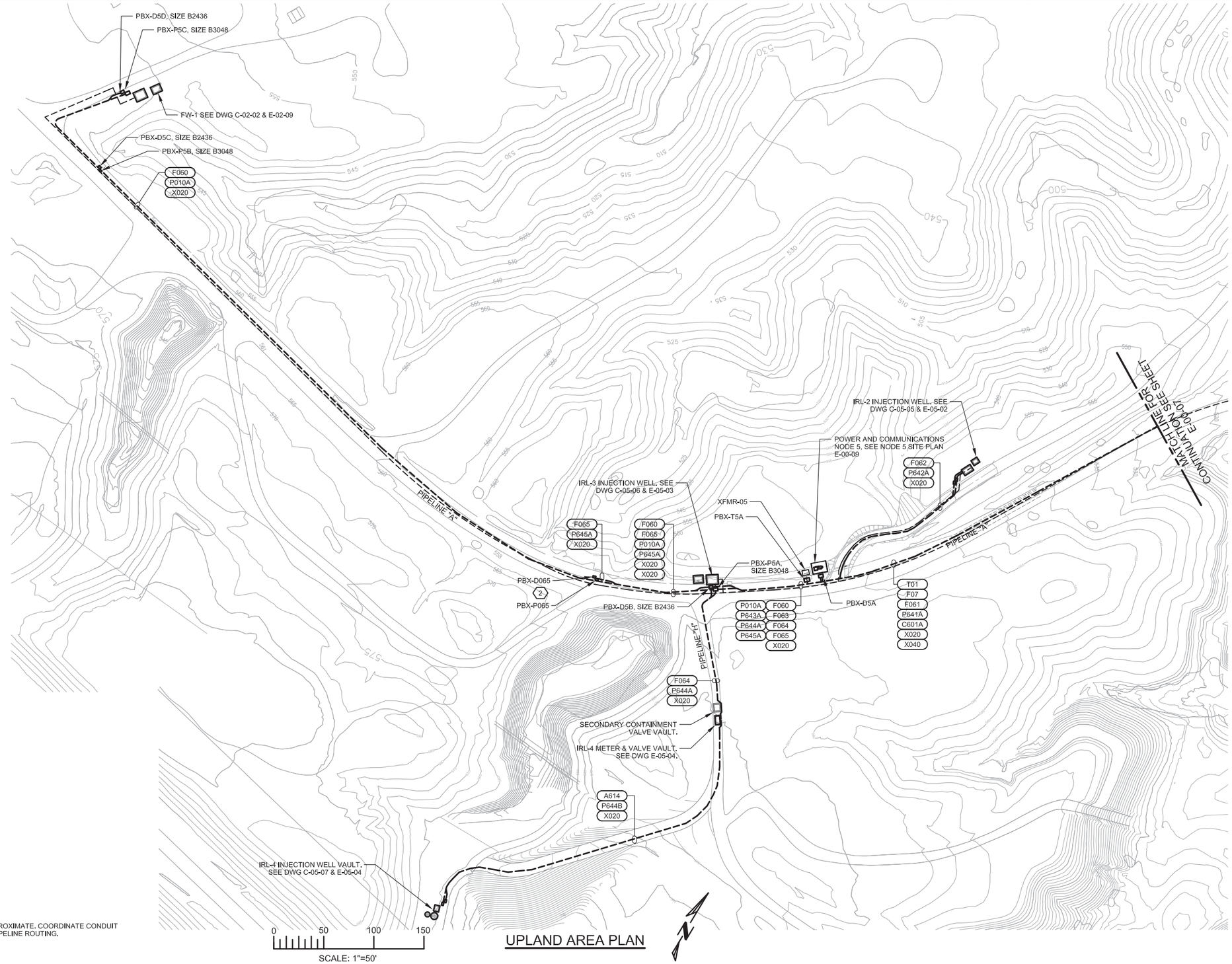

UPLAND AREA PLAN

ELECTRICAL PLAN NOTES:

1. SEE ELECTRICAL PLAN NOTES ON DRAWING E-00-02.

DRAWING REFERENCED NOTES:

1. CONDUIT ROUTE AND PULLBOX LOCATIONS SHOWN ARE APPROXIMATE. COORDINATE CONDUIT ROUTE AND PULLBOX LOCATIONS WITH CIVIL TRENCH AND PIPELINE ROUTING.
2. PROVISIONS FOR FUTURE WELL IRL-5.

DRAFT
NOT FOR
CONSTRUCTION

FRISCH ENGINEERING, INC.
CONSULTING ELECTRICAL ENGINEERS
13405 FOLSOM BLVD, UNIT 600
FOLSOM, CA 95630
PH 916 353 1025
WWW.FRISCHENGINEERING.COM

CH2MHILL®

REVISIONS

NO.	DATE	DESCRIPTION	GM/SPEC	DWN	CHKD	SUPV	APVD BY
2	12/30/14	SUPPLEMENTAL PRE-FINAL (90%) DESIGN		MBY			TPF
1	9/8/14	PRE-FINAL (90%) DESIGN		MBY			TPF
0	4/5/13	INTERMEDIATE (60%) DESIGN		MBY			TPF

APPROVED BY: TPF

SO	
SUPV	TPF
DSGN	MBY
DWN	MBY, NC
CHKD	MF
OK	TPF
DATE	
SCALES	N/A

TOPOCK GROUNDWATER REMEDIATION PROJECT
UPLANDS
AREA PLAN

GAS TRANSMISSION & DISTRIBUTION
PACIFIC GAS AND ELECTRIC COMPANY
SAN FRANCISCO, CALIFORNIA

MICROFILM	
BILL OF MATL	
DWG LIST	
SUPSDS	
SUPSD BY	
SHEET NO. of	SHEETS
E-00-08	REV 2

PLOT DATE: Jan 09, 2015 PLOT TIME: 4:28:19pm

FILENAME: FE-E-XXX-0002AD.dwg

N1808

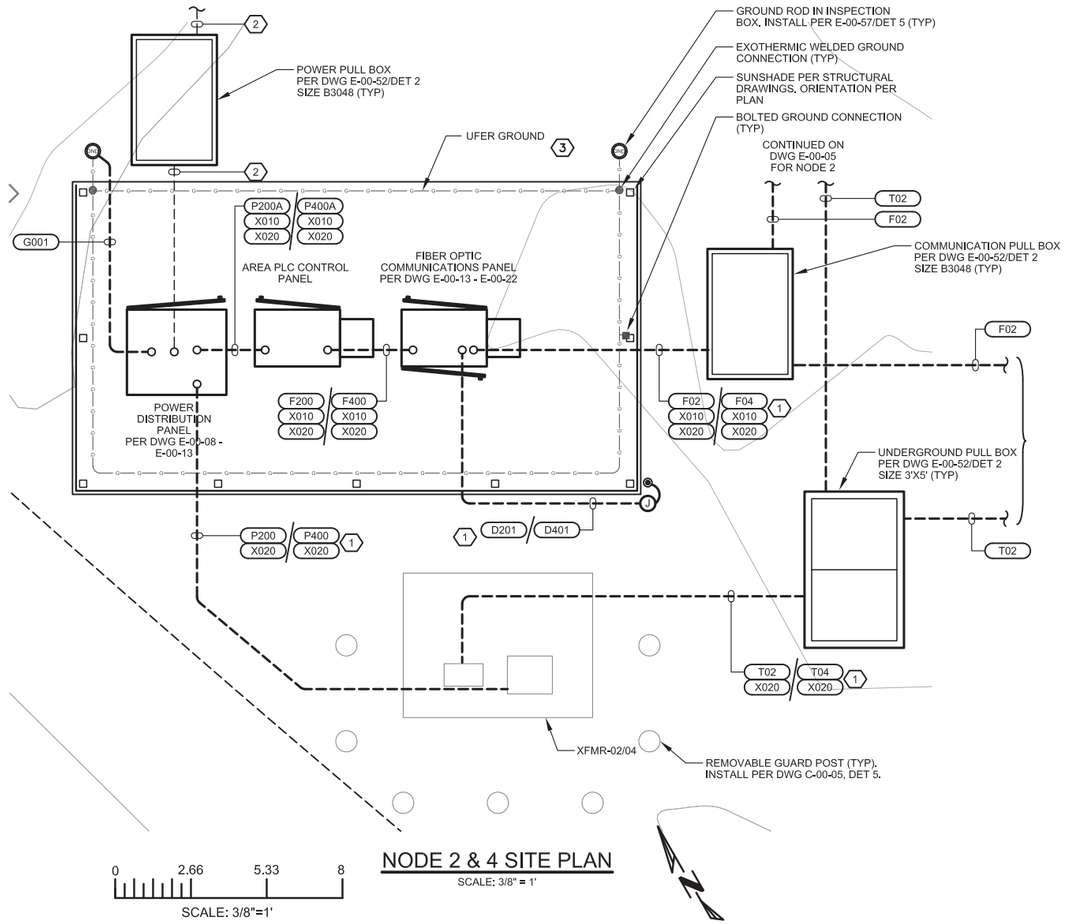

0 2.66 5.33 8

SCALE: 3/8"=1'

NODE 2 & 4 SITE PLAN

SCALE: 3/8" = 1'

DRAWING REFERENCED NOTES:

1. SIMILAR DIAGRAM FOR NODE NO. 2 AND 4. USE 2, 20 & 200 SERIES NUMBERING FOR NODE 2 CONDUITS AND DEVICES USE 4, 40 & 400 SERIES NUMBERING FOR NODE 4 CONDUITS AND DEVICES
2. POWER CONDUITS TO AREA WELLS. CONDUIT SIZE AND QUANTITY PER NODE POWER DISTRIBUTION DIAGRAM AND CIVIL DRAWINGS.
3. UFER GROUND SHALL CONSIST OF #2 BARE COPPER CONDUCTOR CENTERED IN CONCRETE PAD (25 FEET MINIMUM). LOOP CONDUCTOR TO FIT WITHIN CONCRETE PAD. MAINTAIN 3" MINIMUM COVER OVER ALL PORTIONS OF CONDUCTOR.

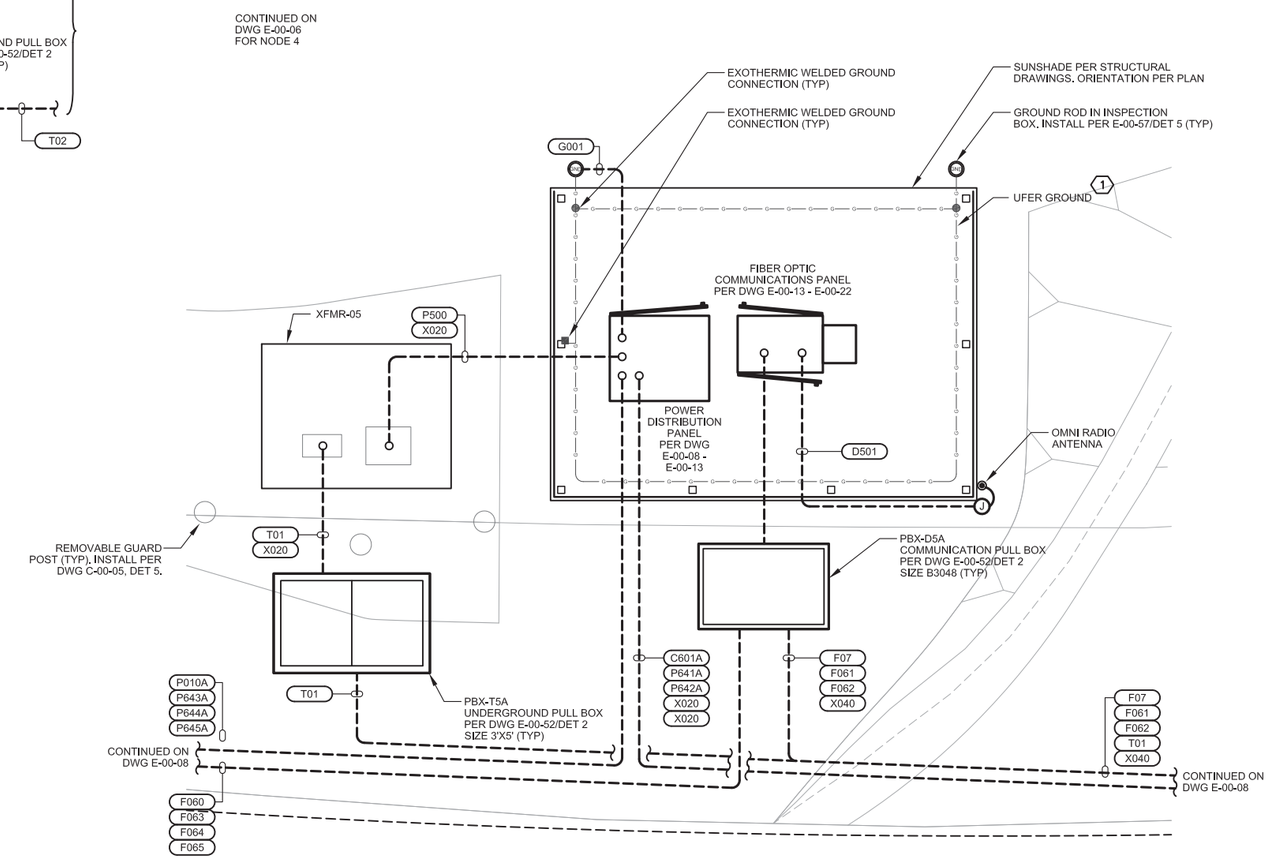

0 2.66 5.33 8

SCALE: 3/8"=1'

NODE 5 SITE PLAN

SCALE: 3/8" = 1'

DRAWING REFERENCED NOTES:

1. UFER GROUND SHALL CONSIST OF #2 BARE COPPER CONDUCTOR CENTERED IN CONCRETE PAD (25 FEET MINIMUM). LOOP CONDUCTOR TO FIT WITHIN CONCRETE PAD. MAINTAIN 3" MINIMUM COVER OVER ALL PORTIONS OF CONDUCTOR.

DRAFT NOT FOR CONSTRUCTION

FRISCH ENGINEERING, INC.
CONSULTING ELECTRICAL ENGINEERS
13405 FOLSOM BLVD, UNIT 600
FOLSOM, CA 95630
PH 916 353 1025
WWW.FRISCHENGINEERING.COM

CH2MHILL®

NO.	DATE	DESCRIPTION	GM/SPEC	DWN	CHKD	SUPV	APVD BY
2	12/30/14	SUPPLEMENTAL PRE-FINAL (90%) DESIGN		MBY			TPF
1	9/8/14	PRE-FINAL (90%) DESIGN		MBY			TPF
0	4/5/13	INTERMEDIATE (60%) DESIGN		MBY			TPF

REVISIONS

APPROVED BY: TPF

SO
SUPV TPF
DSGN MBY
DWN MBY, NC
CHKD MF
OK TPF
DATE
SCALES N/A

TOPOCK GROUNDWATER REMEDIATION PROJECT
TYPICAL NODE SITE PLAN
GAS TRANSMISSION & DISTRIBUTION
PACIFIC GAS AND ELECTRIC COMPANY
SAN FRANCISCO, CALIFORNIA

MICROFILM
BILL OF MATL
DWG LIST
SUPSDS
SUPSD BY
SHEET NO. of SHEETS
E-00-09 REV 2

PLOT DATE: Jan 09, 2015 PLOT TIME: 4:28:55pm
FILENAME: FE-E-XXX-0002AD.dwg

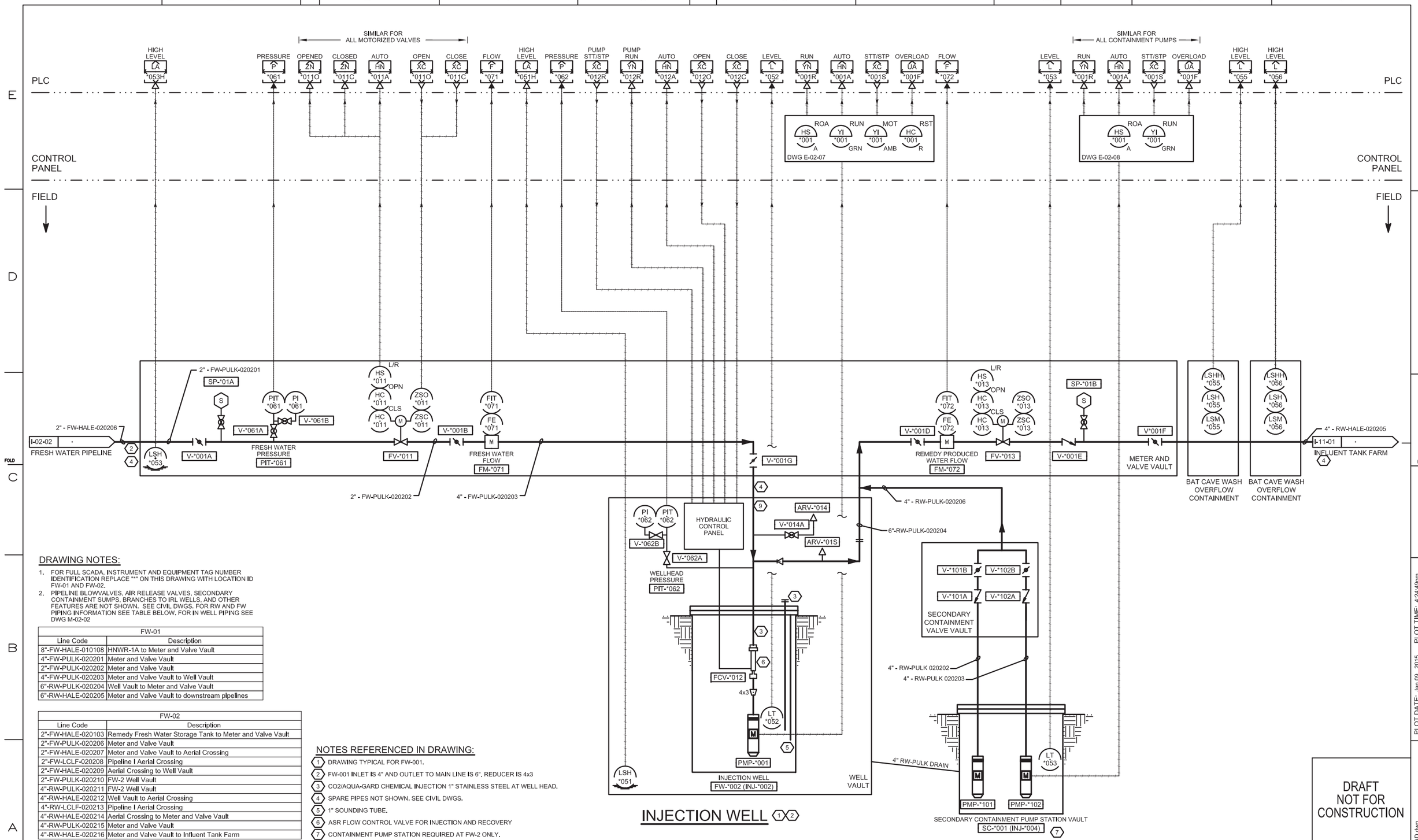

INJECTION WELL (1)(2)

DRAWING NOTES:

1. FOR FULL SCADA, INSTRUMENT AND EQUIPMENT TAG NUMBER IDENTIFICATION REPLACE "*" ON THIS DRAWING WITH LOCATION ID FW-01 AND FW-02.
2. PIPELINE BLOWVALVES, AIR RELEASE VALVES, SECONDARY CONTAINMENT SUMPS, BRANCHES TO IRL WELLS, AND OTHER FEATURES ARE NOT SHOWN. SEE CIVIL DWGS. FOR RW AND FW PIPING INFORMATION SEE TABLE BELOW. FOR IN WELL PIPING SEE DWG M-02-02

FW-01	
Line Code	Description
8"-FW-HALE-010108	HNWR-1A to Meter and Valve Vault
4"-FW-PULK-020201	Meter and Valve Vault
2"-FW-PULK-020202	Meter and Valve Vault
4"-FW-PULK-020203	Meter and Valve Vault to Well Vault
6"-RW-PULK-020204	Well Vault to Meter and Valve Vault
6"-RW-HALE-020205	Meter and Valve Vault to downstream pipelines

FW-02	
Line Code	Description
2"-FW-HALE-020103	Remedy Fresh Water Storage Tank to Meter and Valve Vault
2"-FW-PULK-020206	Meter and Valve Vault
2"-FW-HALE-020207	Meter and Valve Vault to Aerial Crossing
2"-FW-LCLF-020208	Pipeline I Aerial Crossing
2"-FW-HALE-020209	Aerial Crossing to Well Vault
2"-FW-PULK-020210	FW-2 Well Vault
4"-RW-PULK-020211	FW-2 Well Vault
4"-RW-HALE-020212	Well Vault to Aerial Crossing
4"-RW-LCLF-020213	Pipeline I Aerial Crossing
4"-RW-HALE-020214	Aerial Crossing to Meter and Valve Vault
4"-RW-PULK-020215	Meter and Valve Vault
4"-RW-HALE-020216	Meter and Valve Vault to Influent Tank Farm

NOTES REFERENCED IN DRAWING:

1. DRAWING TYPICAL FOR FW-001.
2. FW-001 INLET IS 4" AND OUTLET TO MAIN LINE IS 6". REDUCER IS 4x3
3. CO2/AQUA-GARD CHEMICAL INJECTION 1" STAINLESS STEEL AT WELL HEAD.
4. SPARE PIPES NOT SHOWN. SEE CIVIL DWGS.
5. 1" SOUNDING TUBE.
6. ASR FLOW CONTROL VALVE FOR INJECTION AND RECOVERY
7. CONTAINMENT PUMP STATION REQUIRED AT FW-2 ONLY.

DRAFT NOT FOR CONSTRUCTION

FRISCH ENGINEERING, INC.
CONSULTING ELECTRICAL ENGINEERS
13405 FOLSOM BLVD, UNIT 600
FOLSOM, CA 95630
PH 916 353 1025
WWW.FRISCHENGINEERING.COM

CH2MHILL®

NO.	DATE	DESCRIPTION	GM/SPEC	DWN	CHKD	SUPV	APVD BY
2	12/30/14	SUPPLEMENTAL PRE-FINAL (90%) DESIGN		MBY			TPF
1	9/8/14	PRE-FINAL (90%) DESIGN		MBY			TPF
0	4/5/13	INTERMEDIATE (60%) DESIGN		MBY			TPF

REVISIONS

APPROVED BY: TPF

SO
SUPV TPF
DSGN MBY
DWN MBY, NC
CHKD MF
OK TPF
DATE
SCALES N/A

TOPOCK GROUNDWATER REMEDIATION PROJECT
P&ID
INJECTION WELL
GAS TRANSMISSION & DISTRIBUTION
PACIFIC GAS AND ELECTRIC COMPANY
SAN FRANCISCO, CALIFORNIA

MICROFILM
BILL OF MATL
DWG LIST
SUPSDS
SUPSD BY
SHEET NO. of SHEETS
I-02-02
REV 2

FILENAME: FE-I-XXX-0202AD.dwg
PLOT DATE: Jan 09, 2015
PLOT TIME: 4:24:49pm

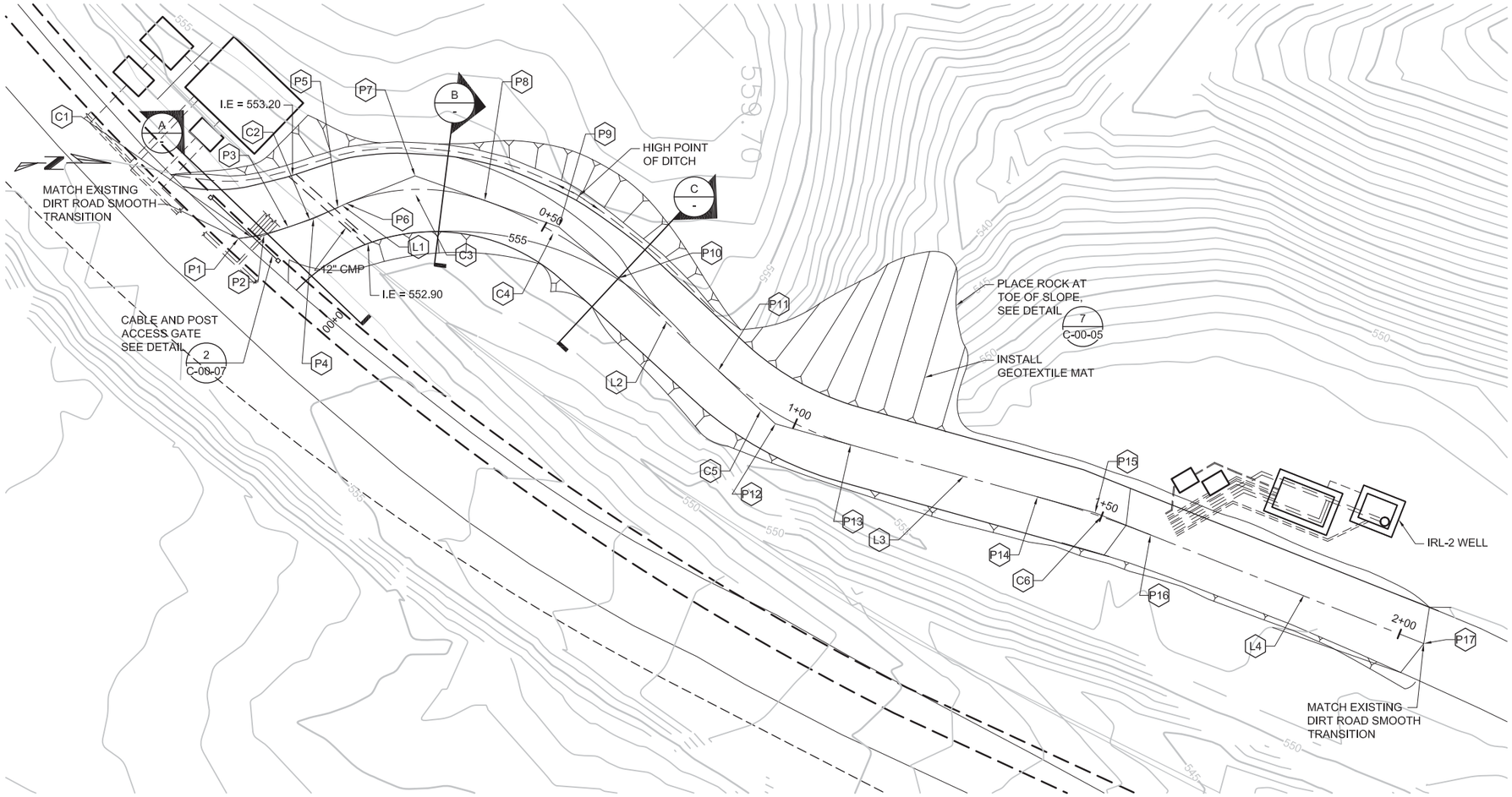

IRL-2 ACCESS ROAD - SITE PLAN

1" = 10'

Point Table				
Point	Description	Sta	Northing	Easting
P1	BC	0+00.00	2102879.51	7614089.03
P2	PI	0+04.00	2102883.48	7614088.54
P3	EC,BC	0+07.94	2102887.26	7614087.26
P4	PI	0+12.12	2102891.22	7614085.92
P5	EC	0+16.30	2102895.03	7614084.18
P6	BC	0+17.77	2102896.37	7614083.57
P7	PI	0+29.31	2102907.08	7614079.26
P8	EC,BC	0+39.84	2102917.96	7614083.11
P9	PI	0+52.12	2102929.52	7614087.23
P10	EC	0+64.13	2102938.87	7614095.20
P11	BC	0+89.18	2102954.40	7614109.65
P12	PI	1+01.38	2102963.32	7614117.97
P13	EC	1+13.12	2102975.08	7614121.24
P14	BC	1+43.39	2103004.23	7614129.36
P15	PI	1+52.72	2103013.22	7614131.87
P16	EC	1+62.04	2103021.88	7614135.31
P17	PI	2+07.91	2103064.51	7614152.28

Line Table				
Line	Beg Point	End Point	Distance	Bearing
L1	P5	P6	1.47	N 24° 28' 34" W
L2	P10	P11	25.05	N 42° 56' 13" E
L3	P13	P14	30.27	N 15° 33' 56" E
L4	P16	P17	45.87	N 21° 42' 23" E

Curve Table						
Curve	Beg Point	End Point	Distance	Ä	Radius	Tangent
C1	P1	P3	7.94	15° 10' 20"	30.00	4.00
C2	P3	P5	8.36	05° 53' 58"	81.21	4.18
C3	P6	P8	22.07	41° 25' 18"	30.53	11.54
C4	P8	P10	24.29	20° 49' 20"	66.83	12.28
C5	P11	P13	23.94	27° 25' 44"	50.00	12.20
C6	P14	P16	18.65	06° 08' 10"	174.00	9.33

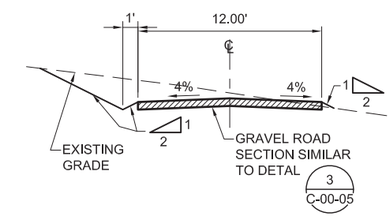

C SECTION @ STA 0+64.13

1" = 5'-0"

C-05-06

CUT QUANTITY = 25.78 CY
FILL QUANTITY = 121.03 CY
NOTE - CONTRACTOR SHALL VERIFY QUANTITIES

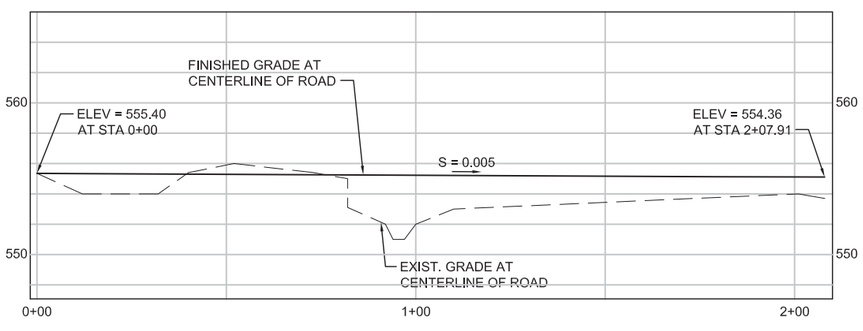

IRL-2 ACCESS ROAD PROFILE

0 20 40 60 HORZ SCALE: 1"=20'

0 5 10 15 VERT SCALE: 1" = 5'

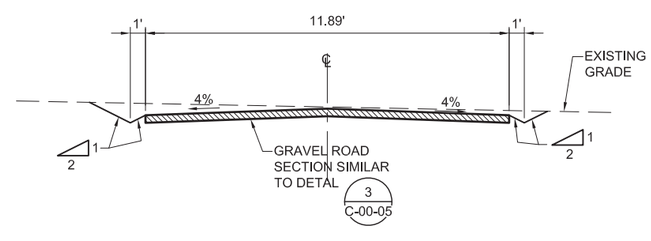

A SECTION @ STA 0+2.00

1" = 5'-0"

C-05-06

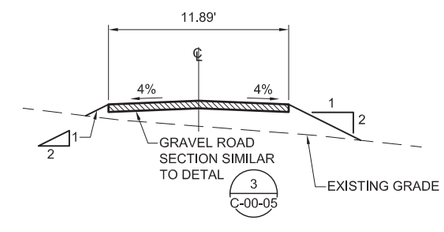

B SECTION @ STA 0+24.00

1" = 5'-0"

C-05-06

0 10 20 30 SCALE: 1" = 20'

DRAFT
NOT FOR
CONSTRUCTION

E2 Consulting Engineers, Inc.
1900 Powell Street, Ste. 250
Emeryville, CA 94608
(510) 652-1164

CH2MHILL®

NO.	DATE	DESCRIPTION	GM/SPEC	DWN	CHKD	SUPV	APVD BY
1	12/30/14	SUPPLEMENTAL PRE-FINAL (90%) DESIGN		PH	PT	VMB	VMB
0	4/5/13	INTERMEDATE (60%) DESIGN		PC	PT	VMB	VMB

REVISIONS

APPROVED BY
SO
SUPV VMB
DSGN PT
DWN PH
CHKD VMB
OK VMB
DATE 12/30/14
SCALES 1" =20'

TOPOCK GROUNDWATER REMEDIATION PROJECT
IRL-2 ACCESS ROAD
PLAN AND SECTION

GAS TRANSMISSION & DISTRIBUTION
PACIFIC GAS AND ELECTRIC COMPANY
SAN FRANCISCO, CALIFORNIA

MICROFILM
BILL OF MATL
DWG LIST
SUPSDS
SUPSD BY
SHEET NO. of SHEETS
C-05-03
REV 1

FILENAME: E2-C-XXX-0503AD.DWG
PLOT DATE: $PLOTDATE PLOT TIME: $PLOTTIME

NOTES:

1. FOR IRL-1 WELL AND METER VAULT STRUCTURAL DETAILS, SEE DWGS. S-05-04 THROUGH S-05-08.
2. FOR WELL, METER AND VALVE VAULT MECHANICAL DETAILS, SEE DWGS. M-05-05 AND M-05-06.

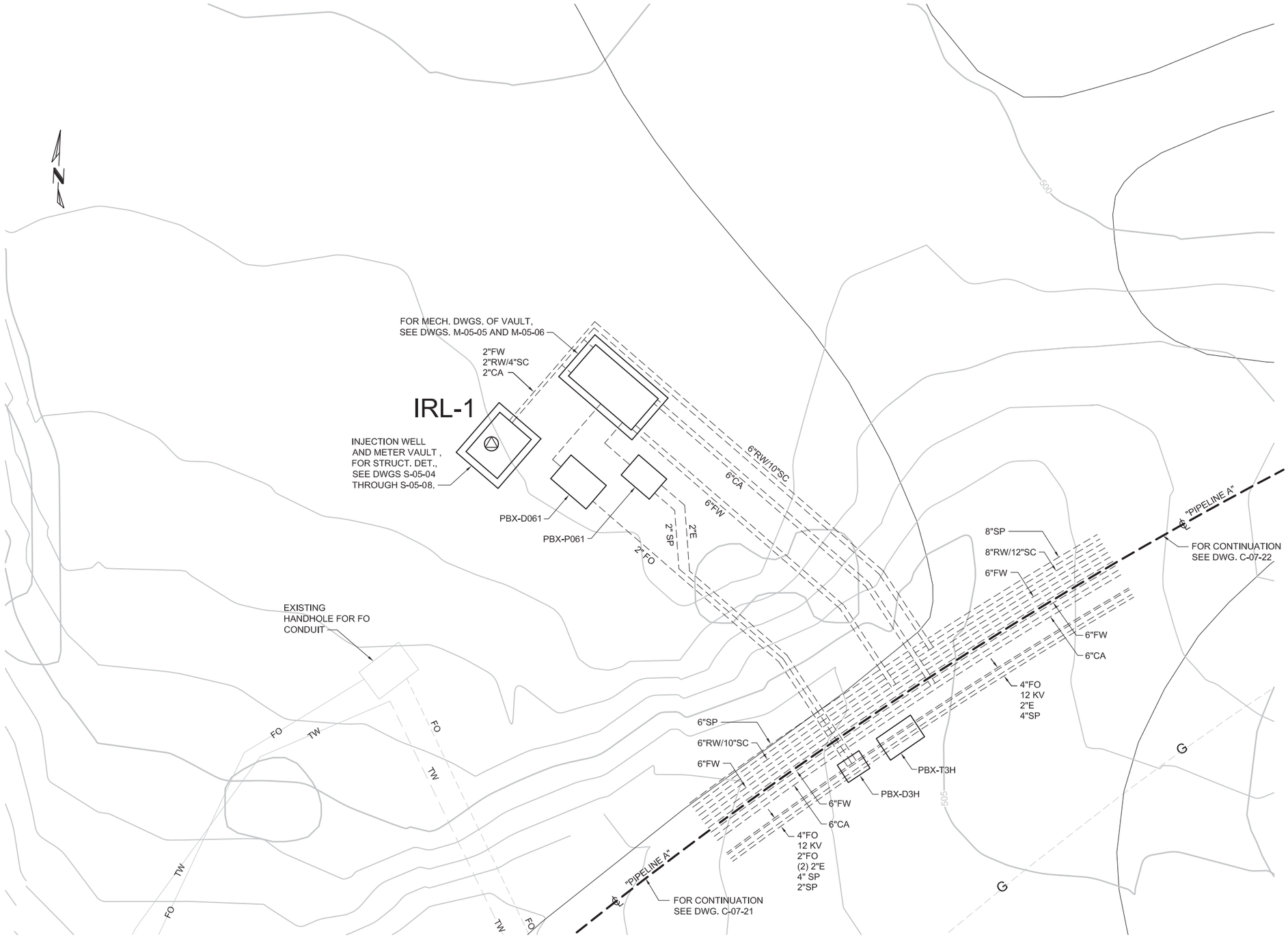

IRL-1 WELL, METER AND VALVE VAULT SITE PLAN

1" = 5'

0 5 10 15

SCALE: 1"=5'

DRAFT NOT FOR CONSTRUCTION

E2 Consulting Engineers, Inc.
1900 Powell Street, Ste. 250
Emeryville, CA 94608
(510) 652-1164

CH2MHILL®

NO.	DATE	DESCRIPTION	GM/SPEC	DWN	CHKD	SUPV	APVD BY
2	12/30/14	SUPPLEMENTAL PRE-FINAL (90%) DESIGN		WTH	PT	VMB	VMB
1	9/8/14	PRE-FINAL (90%) DESIGN		PH	PT	VMB	VMB
0	4/5/13	INTERMEDIATE (60%) DESIGN		PC	PT	VMB	VMB

REVISIONS

APPROVED BY

SO	
SUPV	VMB
DSGN	PT
DWN	PH
CHKD	VMB
OK	VMB
DATE	12/30/14
SCALES	1" =5'-0"

TOPOCK GROUNDWATER REMEDIATION PROJECT
INNER RECIRCULATION LOOP
INJECTION WELL IRL-1
SITE PLAN
GAS TRANSMISSION & DISTRIBUTION
PACIFIC GAS AND ELECTRIC COMPANY
SAN FRANCISCO, CALIFORNIA

MICROFILM
BILL OF MATL
DWG LIST
SUPSDS
SUPSD BY
SHEET NO. of SHEETS
C-05-04
REV 2

FILENAME: E2-C-XXX-0504AD.DWG
PLOT DATE: $PLOTDATE PLOT TIME: $PLOTTIME
C:\CAD\dwg\Topock\90% plans\drawings\REVISED ALIGNMENT\01-15\E2-C-XXX-0504.DWG, 1/2/2015 9:53:40 AM

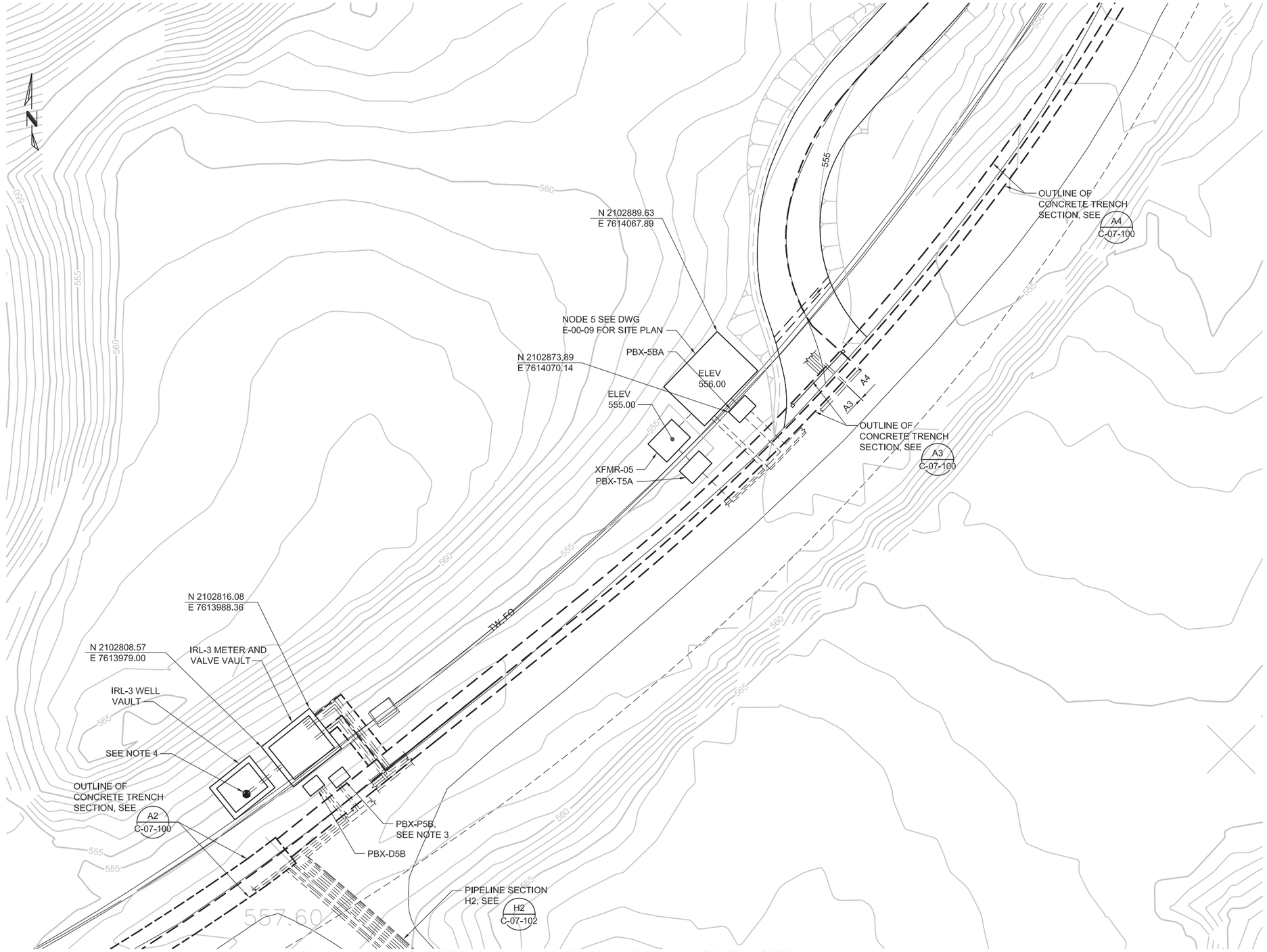

NOTES:

1. FOR IRL-3 WELL AND METER VAULT STRUCTURAL DETAILS, SEE DWGS. S-05-01 THROUGH S-05-05.
2. FOR WELL, METER AND VALVE VAULT MECHANICAL DETAILS, SEE DWGS. M-05-05 AND M-05-06.
3. SEE E-00-09 FOR ELECTRICAL SITE PLAN AT IRL-3.
4. FOR COORDINATES OF IRL-3 WELL, SEE DWG. C-00-03.

IRL-3 WELL, METER AND VALVE VAULT AND NODE 5 SITE PLAN

1" = 10'

0 10 20 30
SCALE: 1"=10'

DRAFT
NOT FOR
CONSTRUCTION

E2 Consulting Engineers, Inc.
1900 Powell Street, Ste. 250
Emeryville, CA 94608
(510) 652-1164

CH2MHILL®

NO.	DATE	DESCRIPTION	GM/SPEC	DWN	CHKD	SUPV	APVD BY
2	12/30/14	SUPPLEMENTAL PRE-FINAL (90%) DESIGN		PH	PT	VMB	VMB
1	9/8/14	PRE-FINAL (90%) DESIGN		PH	PT	VMB	VMB
0	4/5/13	INTERMEDIATE (60%) DESIGN		PC	PT	VMB	VMB

REVISIONS

APPROVED BY
ISO
SUPV VMB
DSGN PT
DWN PH
CHKD VMB
OK VMB
DATE 12/30/14
SCALES 1" =5'-0"

TOPOCK GROUNDWATER REMEDIATION PROJECT
INNER RECIRCULATION LOOP
INJECTION WELL IRL-3 AND NODE 5
SITE PLAN
GAS TRANSMISSION & DISTRIBUTION
PACIFIC GAS AND ELECTRIC COMPANY
SAN FRANCISCO, CALIFORNIA

MICROFILM
BILL OF MATL
DWG LIST
SUPSDS
SUPSD BY
SHEET NO. C-05-06 of SHEETS
REV 2

FILENAME: E2-C-XXX-0506AD.DWG
PLOT DATE: $PLOTDATE PLOT TIME: $PLOTTIME
N1808

NOTES:

1. FOR INJECTION WELL AND METER VAULT STRUCTURAL DETAILS, SEE DWGS. S-05-04 THROUGH S-05-08.
2. FOR WELL, METER AND VALVE VAULT MECHANICAL DETAILS, SEE DWGS. M-05-05 AND M-05-06.

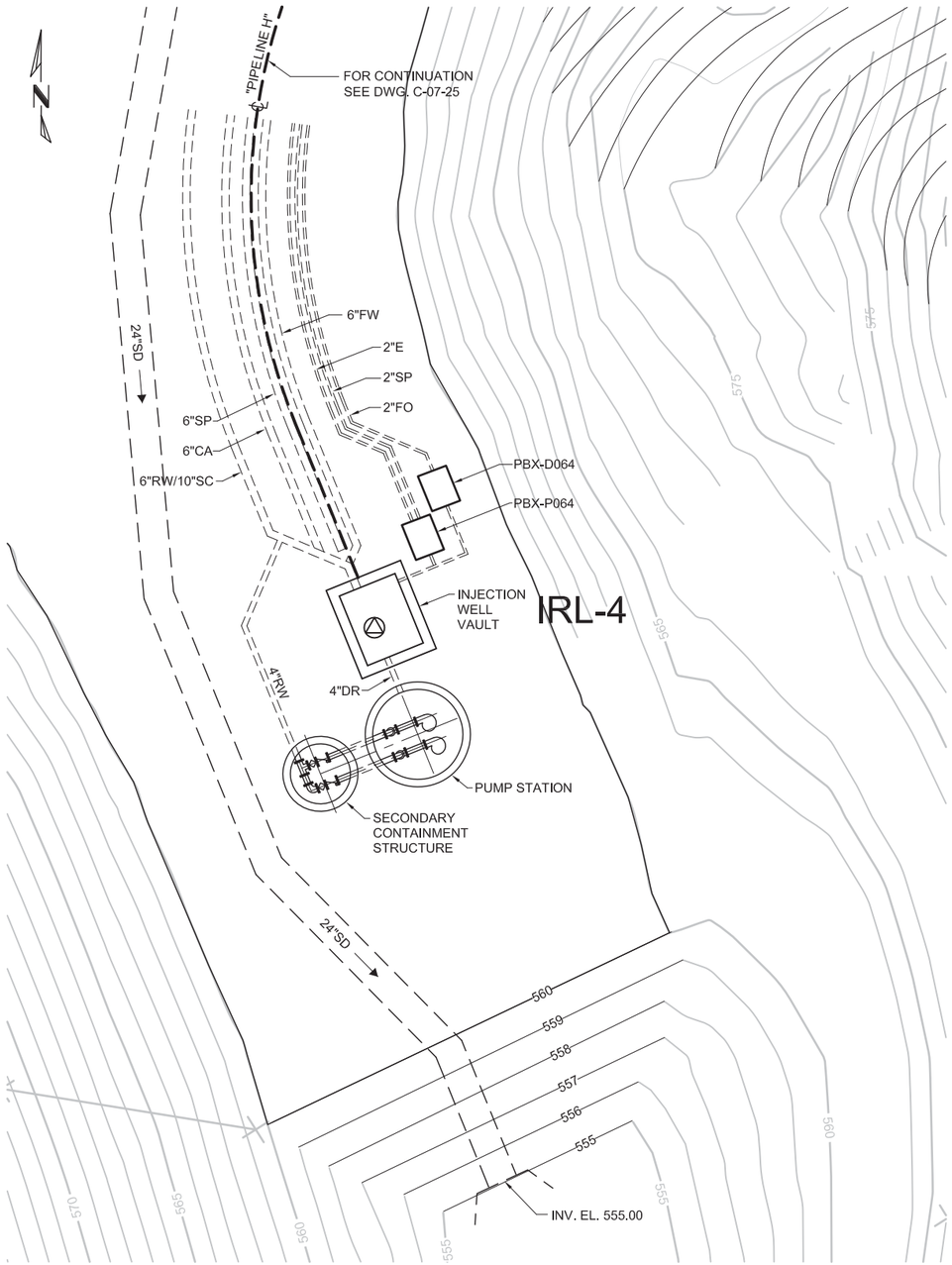

IRL-4 WELL VAULT SITE PLAN

1" = 5'

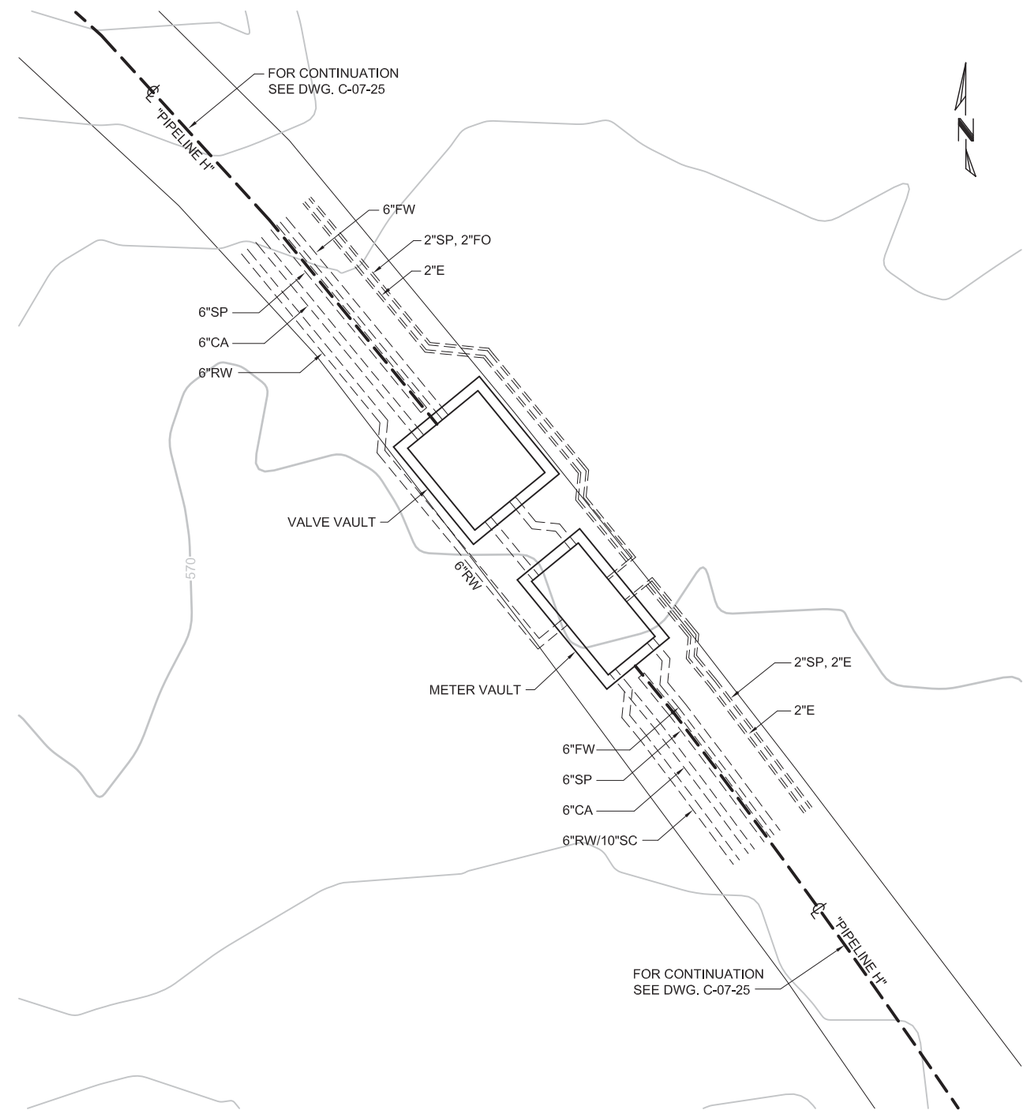

IRL-4 METER AND VALVE VAULT SITE PLAN

1" = 5'

0 5 10 15

SCALE: 1"=5'

DRAFT
NOT FOR
CONSTRUCTION

E2 Consulting Engineers, Inc.
1900 Powell Street, Ste. 250
Emeryville, CA 94608
(510) 652-1164

CH2MHILL®

NO.	DATE	DESCRIPTION	GM/SPEC	DWN	CHKD	SUPV	APVD BY
2	12/30/14	SUPPLEMENTAL PRE-FINAL (90%) DESIGN		WTH	PT	VMB	VMB
1	9/8/14	PRE-FINAL (90%) DESIGN		PH	PT	VMB	VMB
0	4/5/13	INTERMEDIATE (60%) DESIGN		PC	PT	VMB	VMB

REVISIONS

APPROVED BY

SO	
SUPV	VMB
DSGN	PT
DWN	PC
CHKD	VMB
OK	VMB
DATE	12/30/14
SCALES	1" =5'-0"

TOPOCK GROUNDWATER REMEDIATION PROJECT
INNER RECIRCULATION LOOP
INJECTION WELL IRL-4
SITE PLAN
GAS TRANSMISSION & DISTRIBUTION
PACIFIC GAS AND ELECTRIC COMPANY
SAN FRANCISCO, CALIFORNIA

MICROFILM
BILL OF MATL
DWG LIST
SUPSDS
SUPSD BY
SHEET NO. of SHEETS
C-05-07
REV 2

C:\CAD\dwg\Topock\90% plus drawings\REVISED ALIGNMENT\01-15\E2-C-XXX-0507.DWG, 1/2/2015 9:58:06 AM

PLOT DATE: $PLOTDATE PLOT TIME: $PLOTTIME

FILENAME: E2-C-XXX-0507AD.DWG

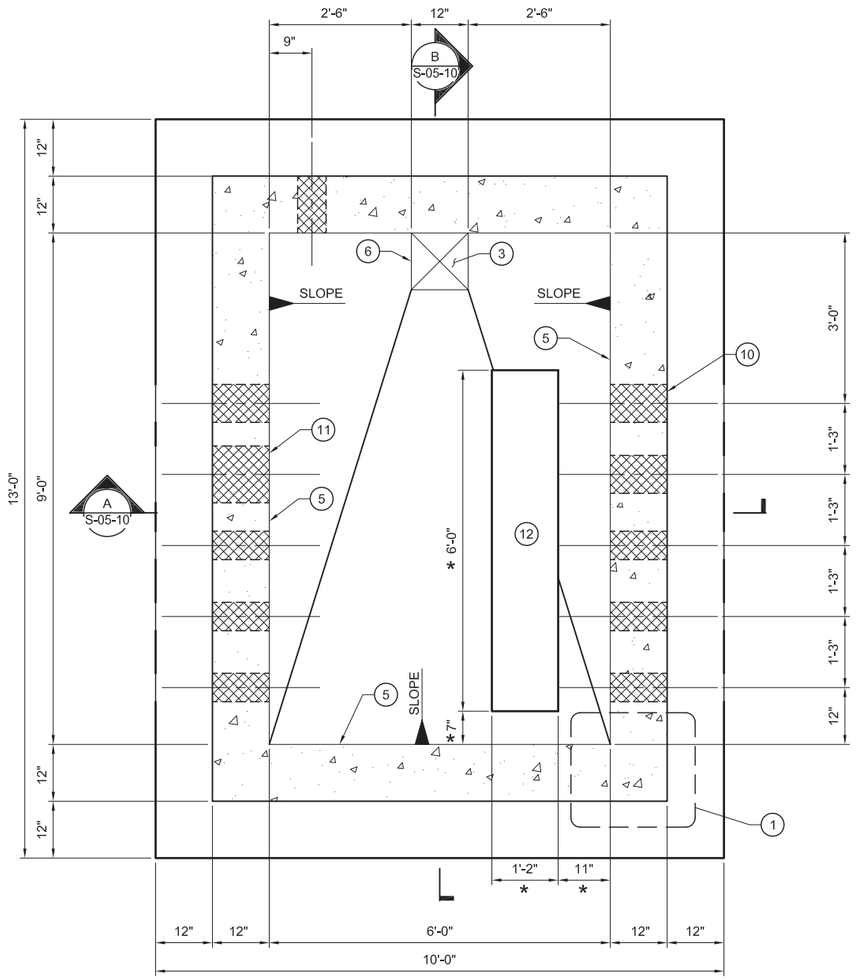

BOTTOM PLAN

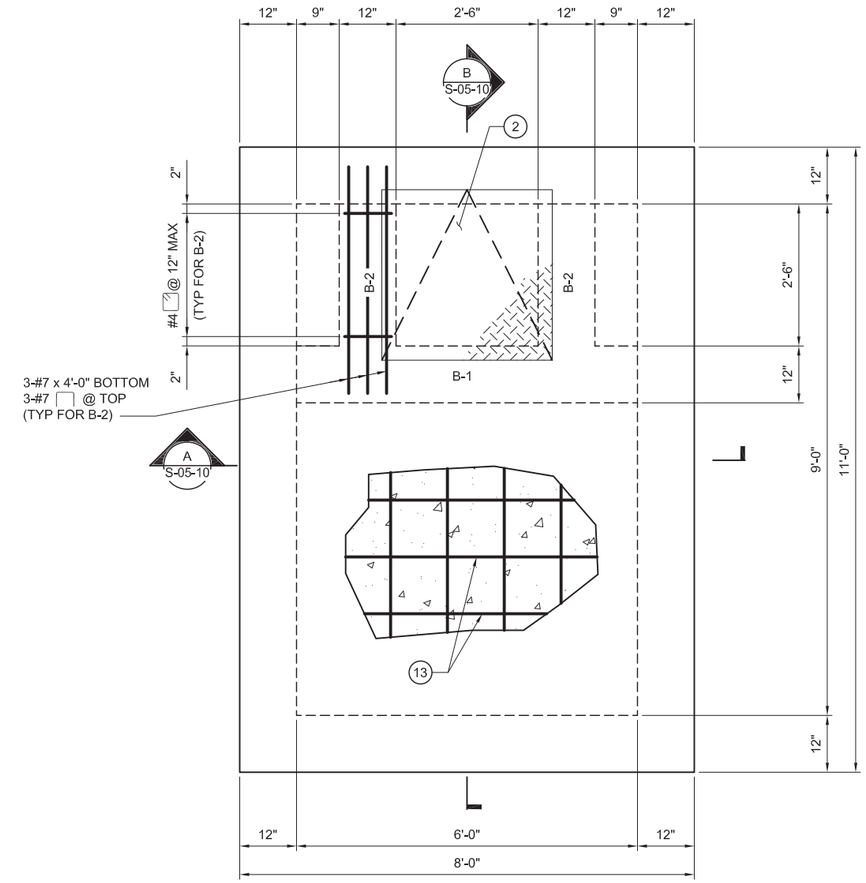

TOP PLAN

3/4" = 1'-0"

KEY NOTES:

1. DOUBLE REINFORCING WALL DETAIL. SEE DETAIL 5 ON DWG S-00-02.
2. 30"x30" SINGLE LEAF ALUMINUM ACCESS HATCH DESIGN FOR HS-20 LOADING.
3. 12"x12"x6" DEEP SUMP. EL. 475.25.
4. WALL HORIZONTAL CONSTRUCTION JOINT W/ PREFORMED PLASTIC ADHESIVE WATERSTOP. SEE DETAIL 1 ON DWG S-00-02.
5. TOP OF CONCRETE, EL. 475.83.
6. TOP OF CONCRETE @ SUMP. (TYP. 3 SIDES). EL. 475.75.
7. 6" THICK CRUSHED DRAIN ROCK, EXTEND MINIMUM 2'-0" BEYOND EDGE OF FOUNDATION.
8. STRUCTURAL FILL COMPACTED TO 95%.
9. TYPICAL REINF. FOR ALL FOUR SIDES.
10. INDICATES PIPE PENETRATIONS FOR REINF. SEE DETAIL 1 ON DWG. S-05-10.
11. INDICATES PIPE PENETRATIONS. FOR REINFORCING, SEE DETAIL 2 ON DWG S-05-10.
12. PIPE SUPPORT, DWG. M-05-09.
13. #6 @ 12" EW, TOP AND BOTTOM.

NOTES:

1. FOR GENERAL STRUCTURAL NOTES, SEE DWG. S-00-01.

* 2. DIMENSIONS AND ELEVATIONS MARKED WITH AN ASTERISK TO BE VERIFIED WITH APPROVED SUBMITTALS.

DRAFT
NOT FOR
CONSTRUCTION

E2 Consulting Engineers, Inc.
1900 Powell Street, Ste. 250
Emeryville, CA 94608
(510) 652-1164

CH2MHILL®

NO.	DATE	DESCRIPTION	GM/SPEC	DWN	CHKD	SUPV	APVD BY
0	12/30/14	SUPPLEMENTAL PRE-FINAL (90%) DESIGN		MD	KJ	VMB	VMB

REVISIONS

APPROVED BY
SO
SUPV VMB
DSGN KDD
DWN MD
CHKD VMB
OK VMB
DATE 12/30/14
SCALES

TOPOCK GROUNDWATER REMEDIATION PROJECT
INNER RECIRCULATION LOOP
LEAK COLLECTION SUMP
PIPELINE A, STA 31+29
GAS TRANSMISSION & DISTRIBUTION
PACIFIC GAS AND ELECTRIC COMPANY
SAN FRANCISCO, CALIFORNIA

MICROFILM
BILL OF MATL
DWG LIST
SUPSDS
SUPSD BY
SHEET NO. of SHEETS
S-05-09
REV 0

PLOT DATE: $PLOTDATE PLOT TIME: $PLOTTIME
FILENAME: E2-S-XXX-0705.dwg

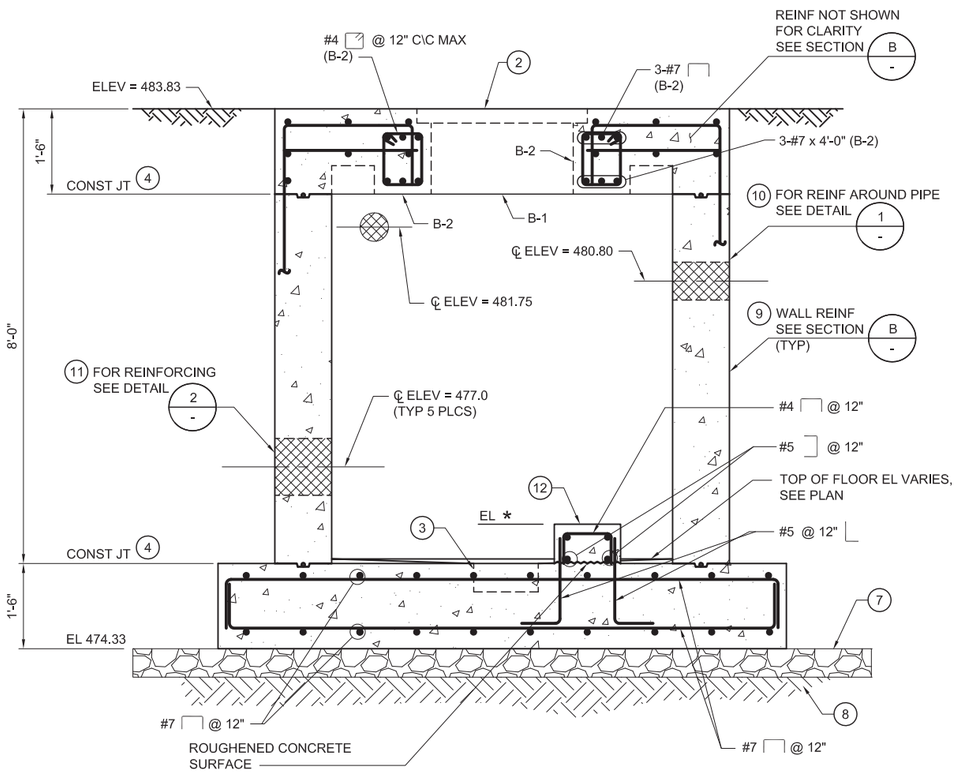

A SECTION
3/4" = 1'-0"
S-05-09

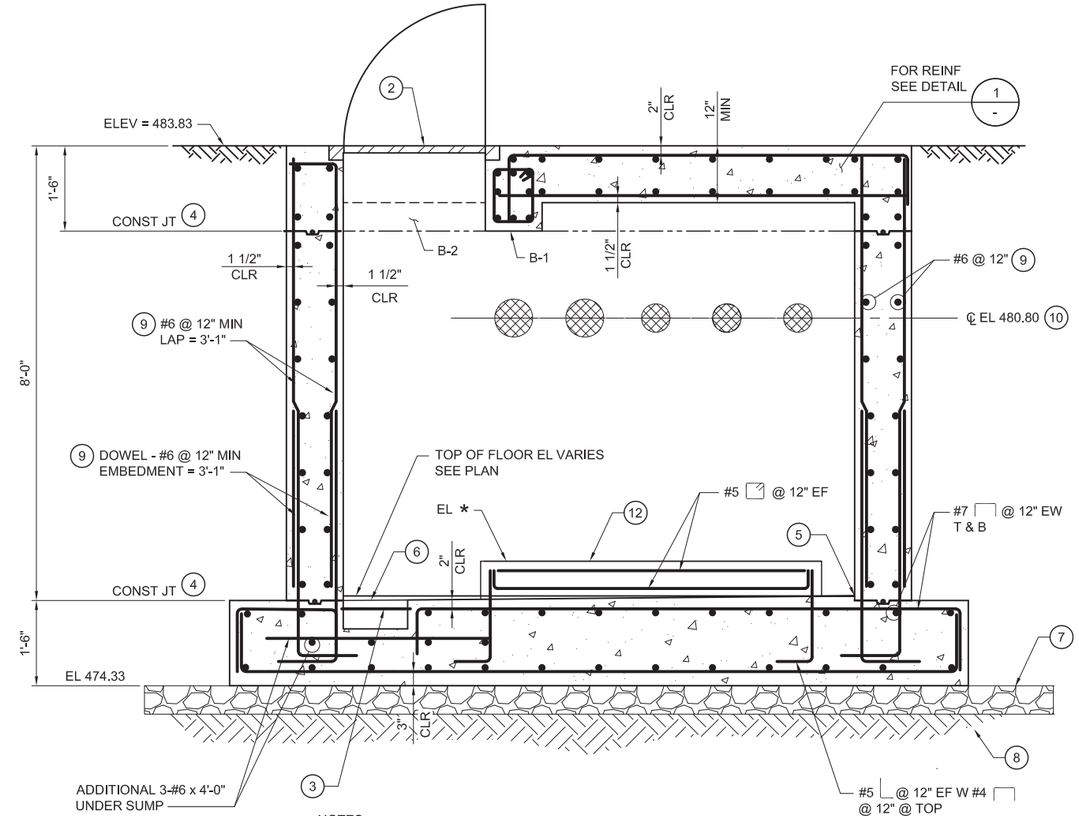

NOTES:
1. FOR KEY NOTES, SEE DWG. S-05-09.

B SECTION
3/4" = 1'-0"
S-05-09

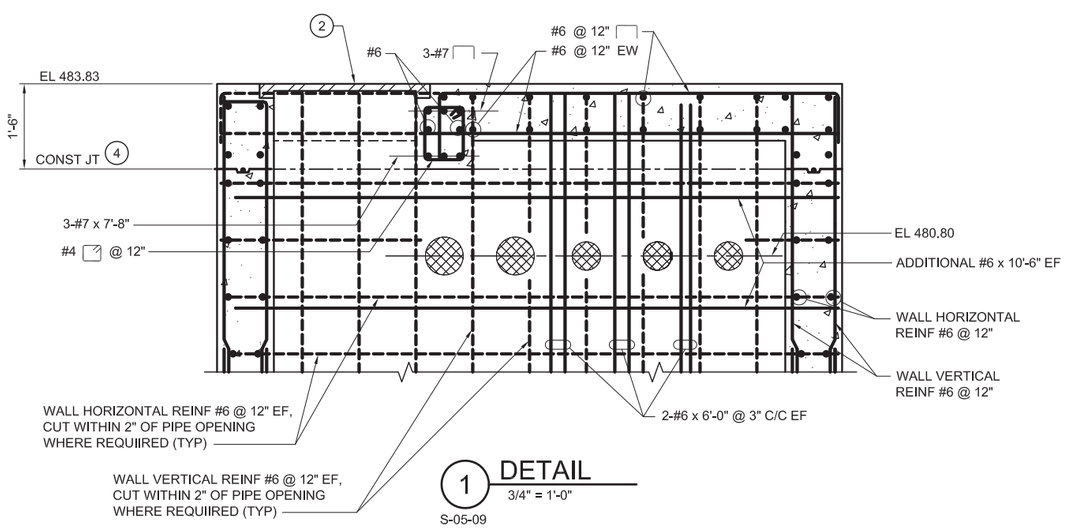

1 DETAIL
3/4" = 1'-0"
S-05-09

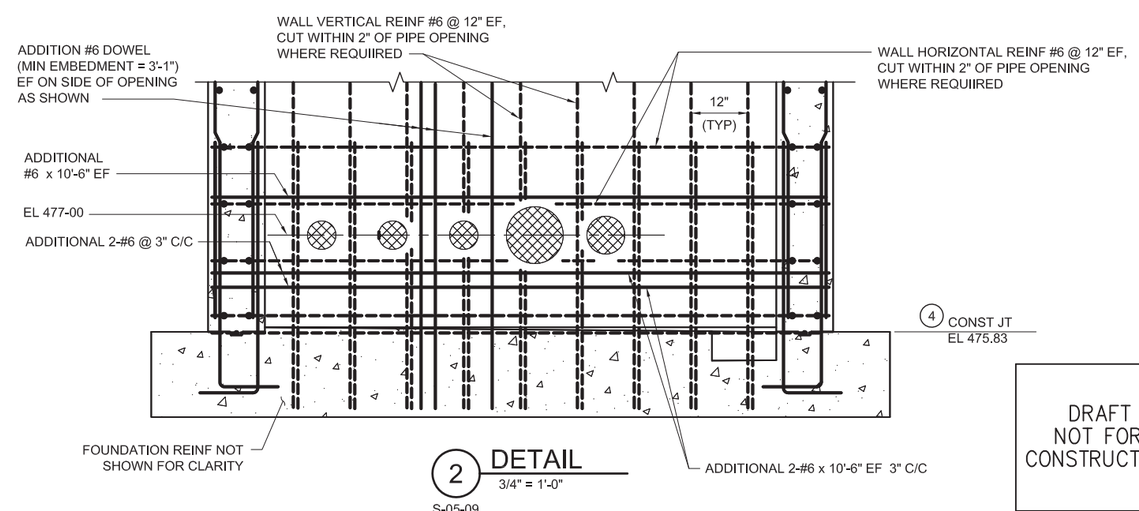

2 DETAIL
3/4" = 1'-0"
S-05-09

DRAFT
NOT FOR
CONSTRUCTION

E2 Consulting Engineers, Inc.
1900 Powell Street, Ste. 250
Emeryville, CA 94608
(510) 652-1164

CH2MHILL®

NO.	DATE	DESCRIPTION	GM/SPEC	DWN	CHKD	SUPV	APVD BY
0	12/30/14	SUPPLEMENTAL PRE-FINAL (90%) DESIGN		MD	KJ	VMB	VMB

REVISIONS

APPROVED BY
SO
SUPV VMB
DSGN KDD
DWN MD
CHKD VMB
OK VMB
DATE 12/30/14
SCALES

TOPOCK GROUNDWATER REMEDIATION PROJECT
INNER RECIRCULATION LOOP
LEAK COLLECTION SUMP
PIPELINE A, STA 31+29
GAS TRANSMISSION & DISTRIBUTION
PACIFIC GAS AND ELECTRIC COMPANY
SAN FRANCISCO, CALIFORNIA

MICROFILM
BILL OF MATL
DWG LIST
SUPSDS
SUPSD BY
SHEET NO. of SHEETS
S-05-10
REV 0

FILENAME: E2-S-XXX-0705.dwg
PLOT DATE: $PLOTDATE PLOT TIME: $PLOTTIME

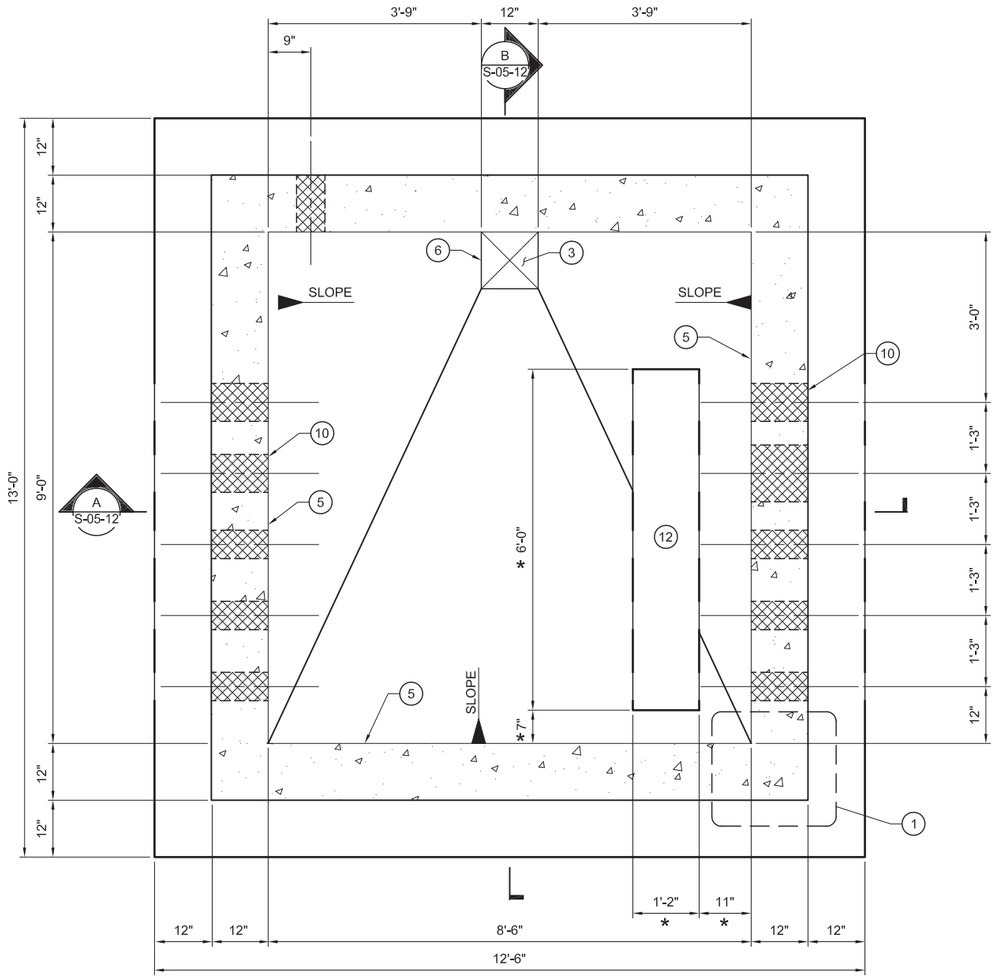

BOTTOM PLAN

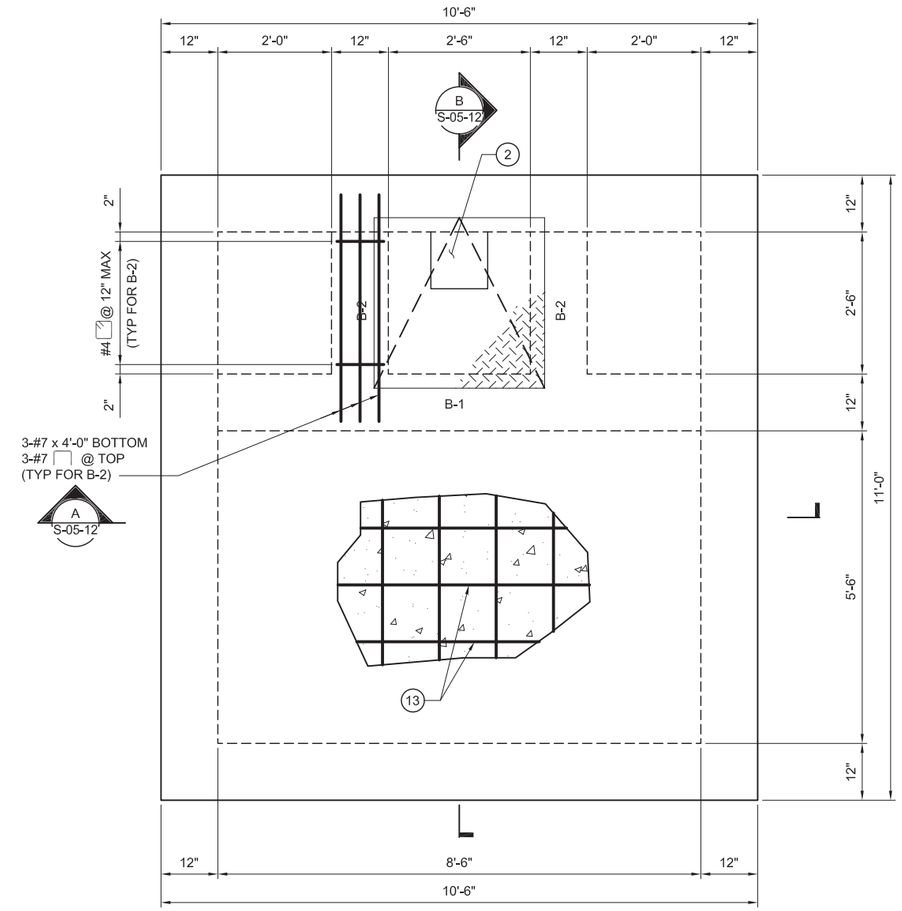

TOP PLAN

3/4" = 1'-0"

KEY NOTES:

1. DOUBLE REINFORCING WALL DETAIL. SEE DETAIL 5 ON DWG S-00-02.
2. 30"x30" SINGLE LEAF ALUMINUM ACCESS HATCH DESIGN FOR HS-20 LOADING.
3. 12"x12"x6" DEEP SUMP. EL. 475.25.
4. WALL HORIZONTAL CONSTRUCTION JOINT W/ PREFORMED PLASTIC ADHESIVE WATERSTOP. SEE DETAIL 1 ON DWG S-00-02.
5. TOP OF CONCRETE, EL. 475.83.
6. TOP OF CONCRETE @ SUMP. (TYP. 3 SIDES). EL. 475.75.
7. 6" THICK CRUSHED DRAIN ROCK, EXTEND MINIMUM 2'-0" BEYOND EDGE OF FOUNDATION.
8. STRUCTURAL FILL COMPACTED TO 95%.
9. TYPICAL REINF. FOR ALL FOUR SIDES.
10. INDICATES PIPE PENETRATIONS FOR REINF. SEE DETAIL 1 ON DWG. S-05-10.
11. NOT USED
12. PIPE SUPPORT, DWG. M-05-10.
13. #6 @ 12" EW, TOP AND BOTTOM.

NOTES:

1. FOR GENERAL STRUCTURAL NOTES, SEE DWG. S-00-01.

* 2. DIMENSIONS AND ELEVATIONS MARKED WITH AN ASTERISK TO BE VERIFIED WITH APPROVED SUBMITTALS.

DRAFT
NOT FOR
CONSTRUCTION

E2 Consulting Engineers, Inc.
1900 Powell Street, Ste. 250
Emeryville, CA 94608
(510) 652-1164

CH2MHILL®

NO.	DATE	DESCRIPTION	GM/SPEC	DWN	CHKD	SUPV	APVD BY
0	12/30/14	SUPPLEMENTAL PRE-FINAL (90%) DEISGN		MD	KJ	VMB	VMB

REVISIONS

APPROVED BY
SO
SUPV VMB
DSGN KDD
DWN MD
CHKD VMB
OK VMB
DATE 12/30/14
SCALES

TOPOCK GROUNDWATER REMEDIATION PROJECT
INNER RECIRCULATION LOOP
LEAK COLLECTION SUMP
PIPELINE A, STA 32+61
GAS TRANSMISSION & DISTRIBUTION
PACIFIC GAS AND ELECTRIC COMPANY
SAN FRANCISCO, CALIFORNIA

MICROFILM
BILL OF MATL
DWG LIST
SUPSDS
SUPSD BY
SHEET NO. of SHEETS
S-05-11
REV 0

FILENAME: E2-S-XXX-0705.dwg
PLOT DATE: $PLOTDATE PLOT TIME: $PLOTTIME

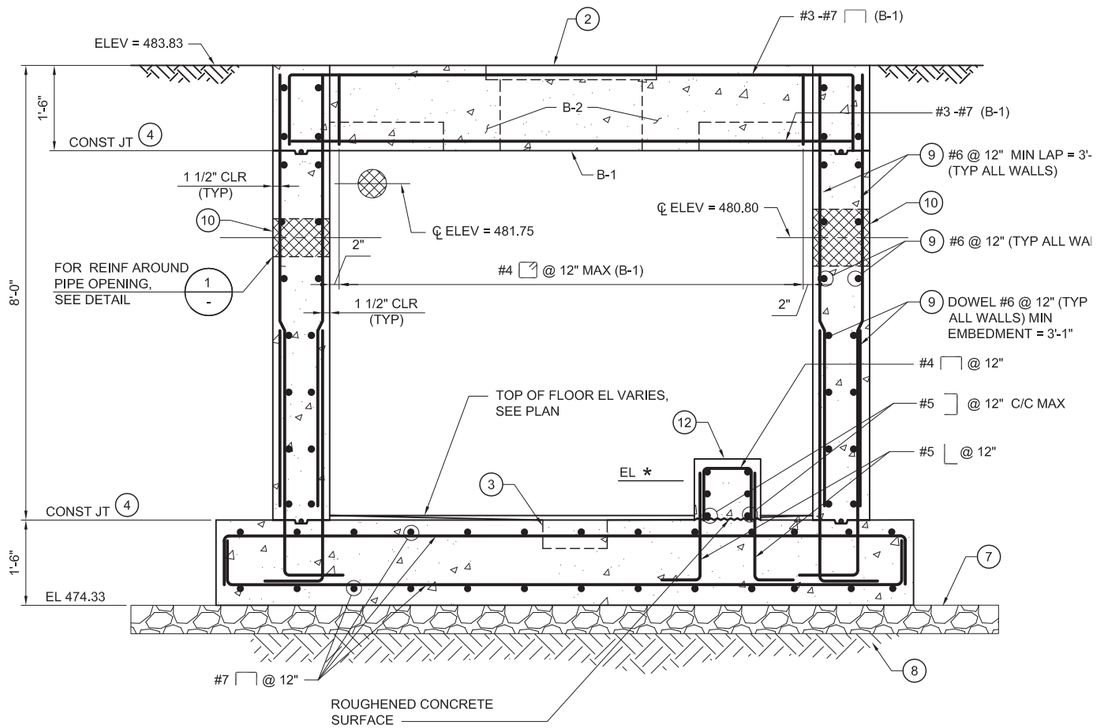

A SECTION
3/4" = 1'-0"
S-05-11

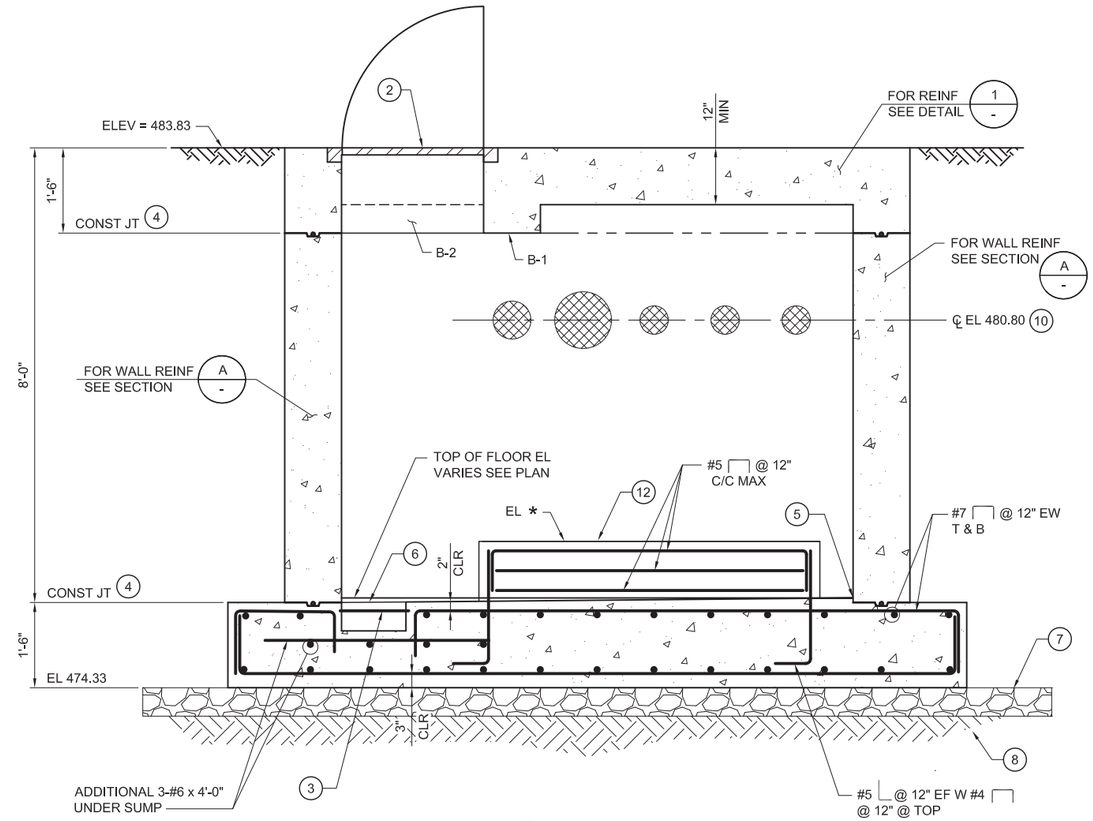

B SECTION
3/4" = 1'-0"
S-05-11

NOTES:
1. FOR KEY NOTES, SEE DWG. S-05-11.

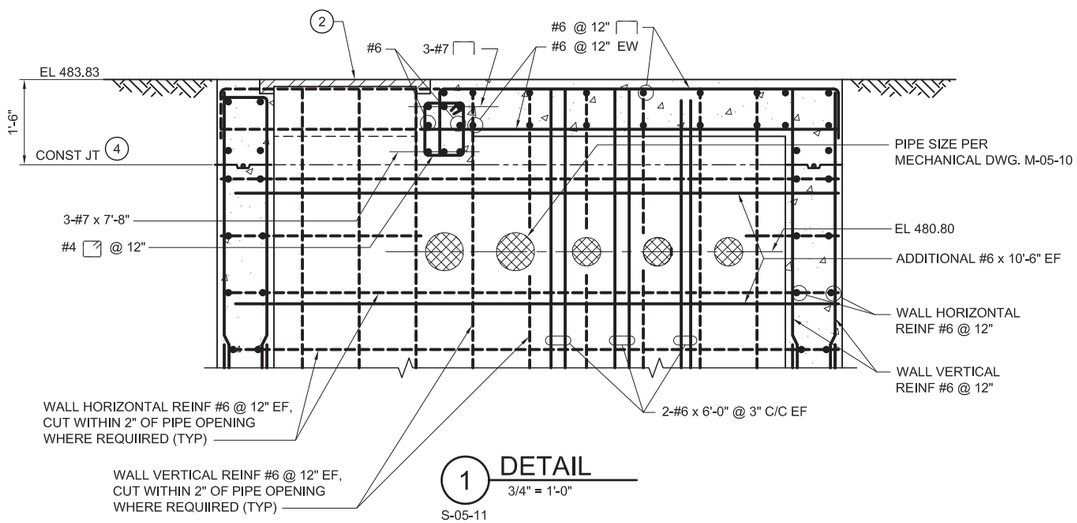

1 DETAIL
3/4" = 1'-0"
S-05-11

DRAFT
NOT FOR
CONSTRUCTION

E2 Consulting Engineers, Inc.
1900 Powell Street, Ste. 250
Emeryville, CA 94608
(510) 652-1164

CH2MHILL®

NO.	DATE	DESCRIPTION	GM/SPEC	DWN	CHKD	SUPV	APVD BY
0	12/30/14	SUPPLEMENTAL PRE-FINAL (90%) DESIGN		MD	KJ	VMB	VMB

REVISIONS

APPROVED BY
SO
SUPV VMB
DSGN KDD
DWN MD
CHKD VMB
OK VMB
DATE 12/30/14
SCALES

TOPOCK GROUNDWATER REMEDIATION PROJECT
INNER RECIRCULATION LOOP
LEAK COLLECTION SUMP
PIPELINE A, STA 32+61
GAS TRANSMISSION & DISTRIBUTION
PACIFIC GAS AND ELECTRIC COMPANY
SAN FRANCISCO, CALIFORNIA

MICROFILM
BILL OF MATL
DWG LIST
SUPSDS
SUPSD BY
SHEET NO. of SHEETS
S-05-12
REV 0

PLOT DATE: $PLOTDATE PLOT TIME: $PLOTTIME
FILENAME: E2-S-XXX-0705.dwg

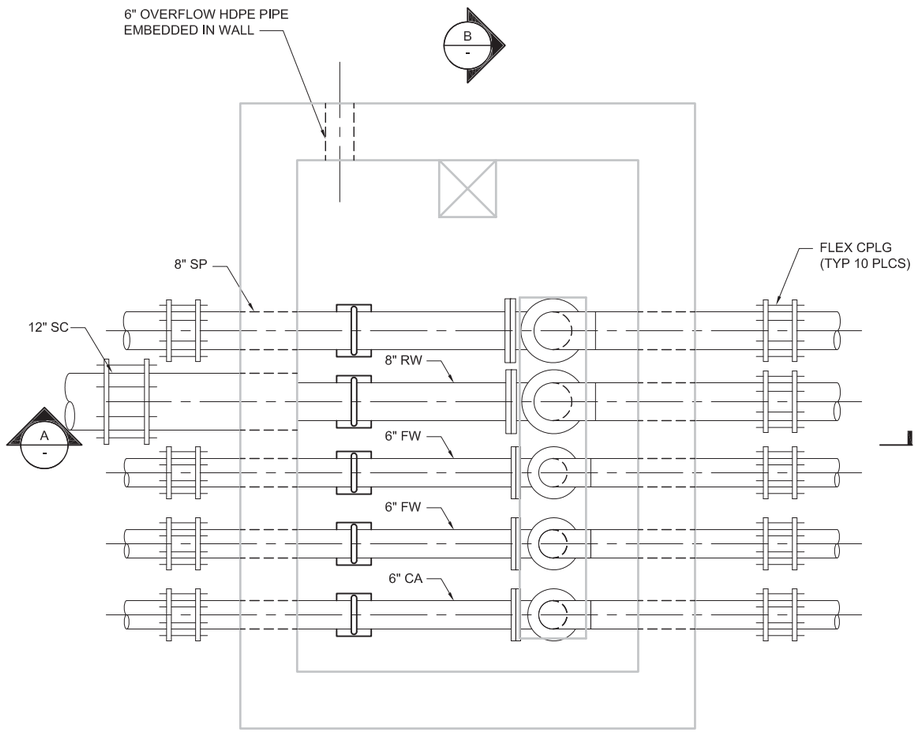

L

BOTTOM PLAN

3/4" = 1'-0"

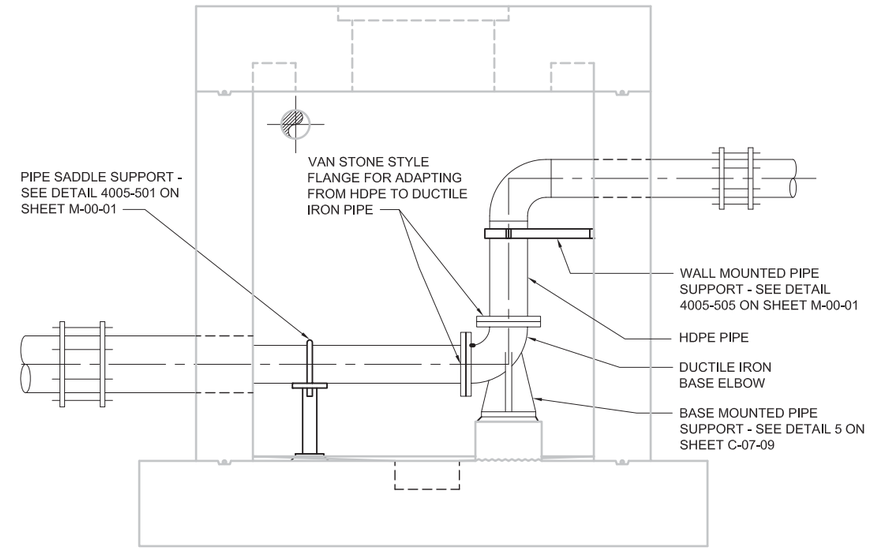

A SECTION

3/4" = 1'-0"

NOTE - FOR CONTINUATION
OF ALL PIPING, SEE C-07-38

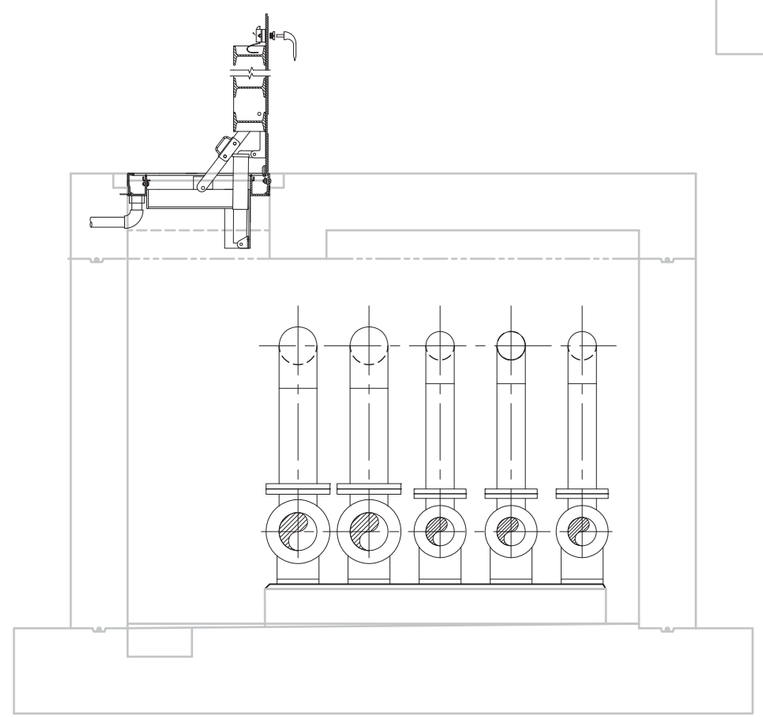

NOTE - FOR CONTINUATION
OF ALL PIPING, SEE C-07-38

B SECTION

3/4" = 1'-0"

DRAFT
NOT FOR
CONSTRUCTION

E2 Consulting Engineers, Inc.
1900 Powell Street, Ste. 250
Emeryville, CA 94608
(510) 652-1164

CH2MHILL®

NO.	DATE	DESCRIPTION	GM/SPEC	DWN	CHKD	SUPV	APVD BY
0	12/30/14	SUPPLEMENTAL PRE-FINAL (90%) DESIGN		MD	KJ	VMB	VMB

REVISIONS

APPROVED BY

SO	
SUPV	VMB
DSGN	KJ
DWN	MD
CHKD	VMB
OK	VMB
DATE	12/30/14
SCALES	

TOPOCK GROUNDWATER REMEDIATION PROJECT
INNER RECIRCULATION LOOP
LEAK COLLECTION SUMP
PIPELINE A, STA 31+29
GAS TRANSMISSION & DISTRIBUTION
PACIFIC GAS AND ELECTRIC COMPANY
SAN FRANCISCO, CALIFORNIA

MICROFILM
BILL OF MATL
DWG LIST
SUPSDS
SUPSD BY
SHEET NO. of SHEETS
M-05-09
REV 0

PLOT DATE: $PLOTDATE PLOT TIME: $PLOTTIME
FILENAME: E2-S-XXX-0705.dwg

N1808

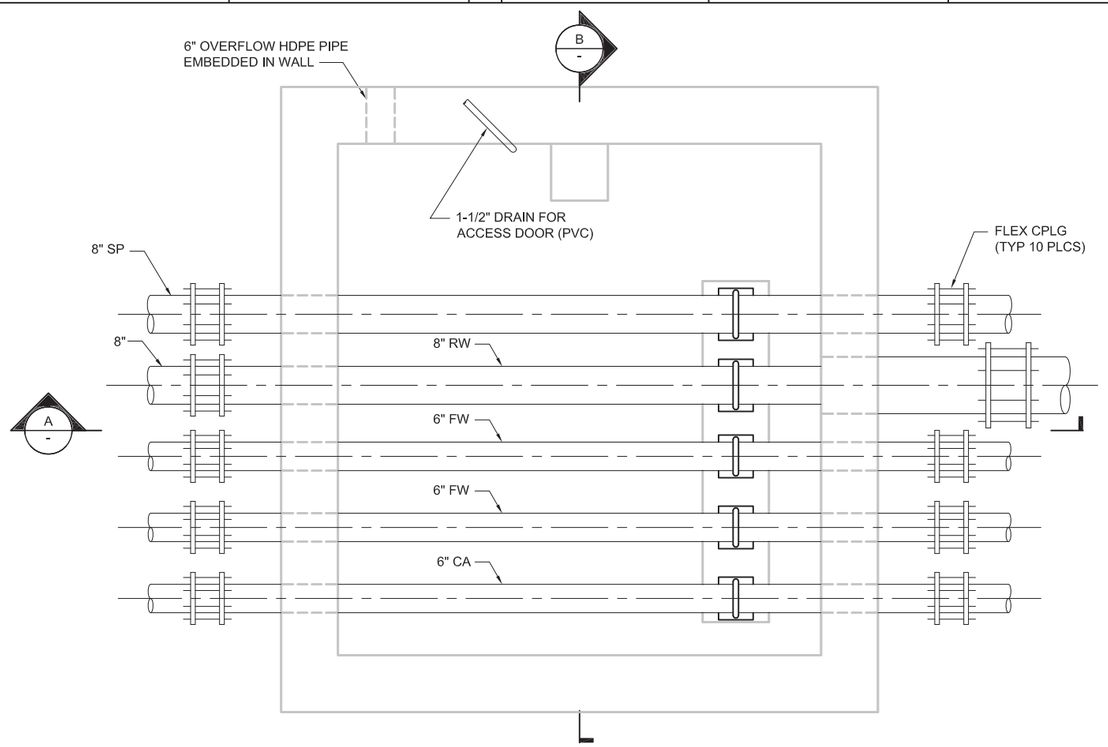

BOTTOM PLAN
3/4" = 1'-0"

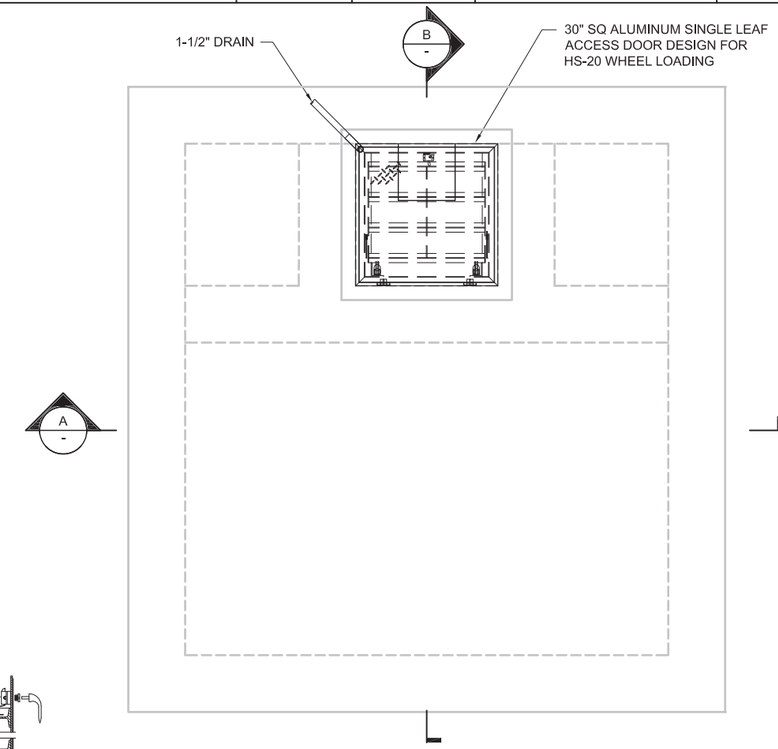

TOP PLAN
3/4" = 1'-0"

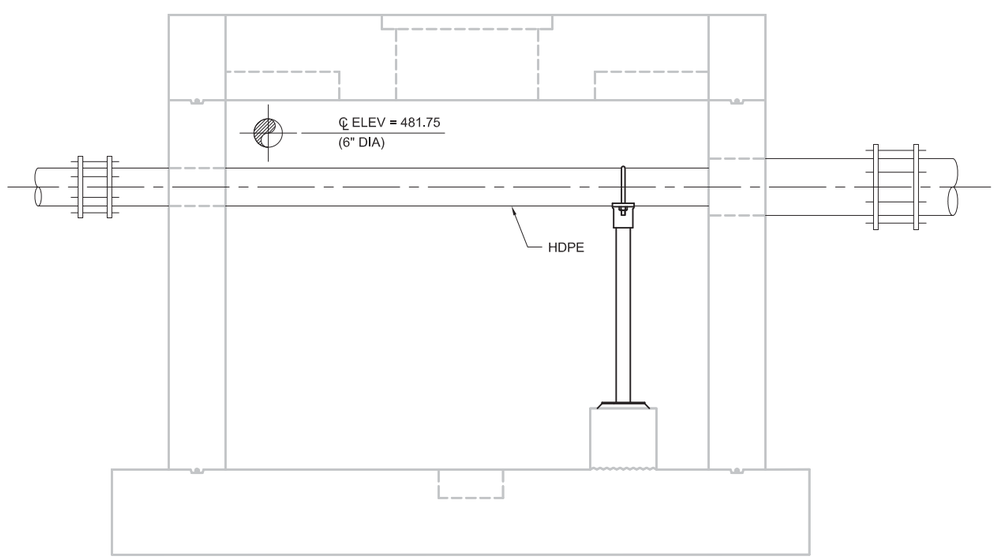

A SECTION
3/4" = 1'-0"

NOTE - FOR CONTINUATION
OF PIPING, SEE C-07-38

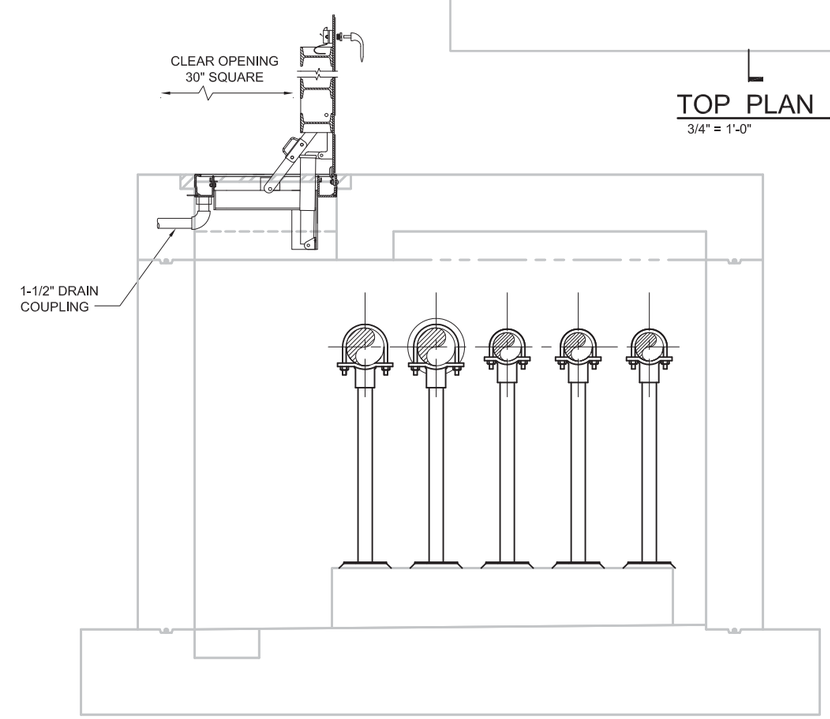

B SECTION
3/4" = 1'-0"

DRAFT
NOT FOR
CONSTRUCTION

E2 Consulting Engineers, Inc.
1900 Powell Street, Ste. 250
Emeryville, CA 94608
(510) 652-1164

CH2MHILL®

NO.	DATE	DESCRIPTION	GM/SPEC	DWN	CHKD	SUPV	APVD	BY
0	12/30/14	SUPPLEMENTAL PRE-FINAL (90%) DESIGN		MD	KJ	VMB	VMB	

REVISIONS

APPROVED BY
SO
SUPV VMB
DSGN KJ
DWN MD
CHKD VMB
OK VMB
DATE 12/30/14
SCALES

TOPOCK GROUNDWATER REMEDIATION PROJECT
INNER RECIRCULATION LOOP
LEAK COLLECTION SUMP
PIPELINE A, STA 32+61
GAS TRANSMISSION & DISTRIBUTION
PACIFIC GAS AND ELECTRIC COMPANY
SAN FRANCISCO, CALIFORNIA

MICROFILM
BILL OF MATL
DWG LIST
SUPSDS
SUPSD BY
SHEET NO. of SHEETS
M-05-10
REV 0

FILENAME: E2-S-XXX-0705.dwg
PLOT DATE: $PLOTDATE PLOT TIME: $PLOTTIME

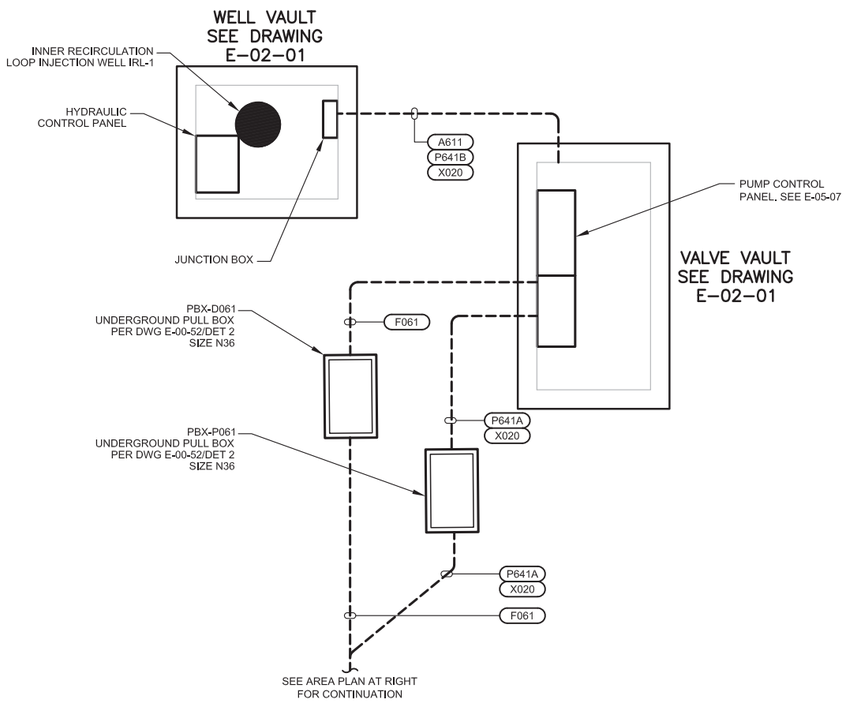

INNER RECIRCULATION LOOP INJECTION WELL IRL-1 ELECTRICAL SITE PLAN

0 2.6 5.2 7.8

SCALE: 3/8"=1'

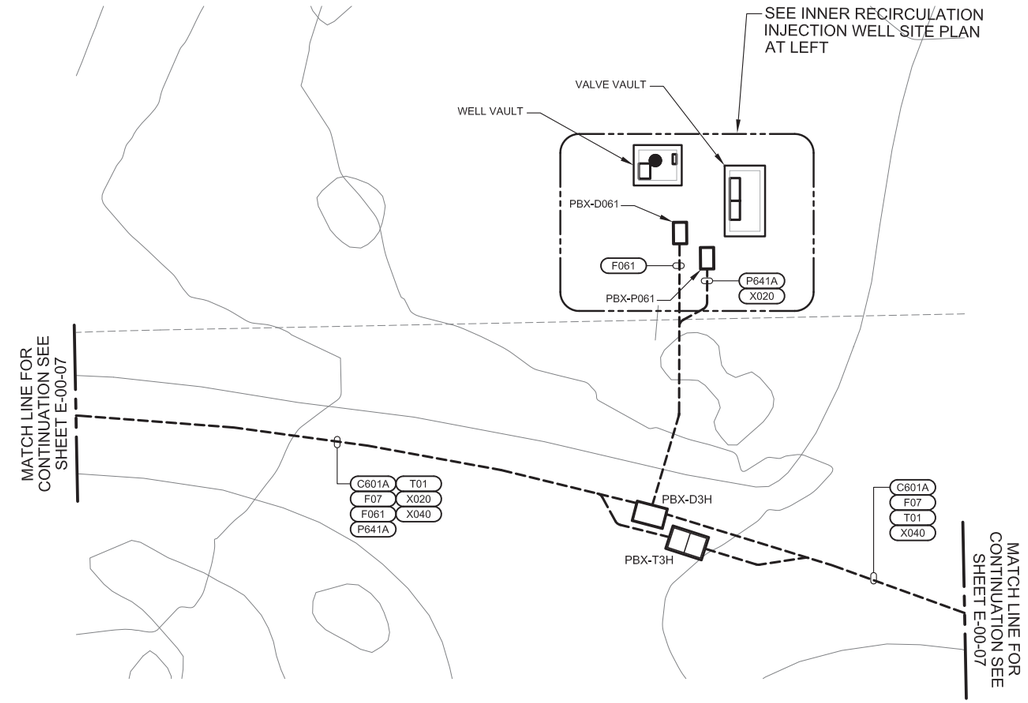

INNER RECIRCULATION LOOP INJECTION WELL IRL-1 AREA PLAN (1)

0 10 20 30

SCALE: 1"=10'

ELECTRICAL PLAN NOTES:

1. SEE ELECTRICAL PLAN NOTES ON DRAWING E-00-02.

ELECTRICAL PLAN NOTES:

1. SEE ELECTRICAL PLAN NOTES ON DRAWING E-00-02.

DRAWING REFERENCED NOTES:

(1) CONDUIT ROUTE AND PULLBOX LOCATIONS SHOWN ARE APPROXIMATE. COORDINATE CONDUIT ROUTE AND PULLBOX LOCATIONS WITH CIVIL PIPELINE ROUTING. SEE DRAWINGS C-05-04.

DRAFT
NOT FOR
CONSTRUCTION

FRISCH ENGINEERING, INC.
CONSULTING ELECTRICAL ENGINEERS
13405 FOLSOM BLVD, UNIT 600
FOLSOM, CA 95630
PH 916 353 1025
WWW.FRISCHENGINEERING.COM

CH2MHILL®

NO.	DATE	DESCRIPTION	GM/SPEC	DWN	CHKD	SUPV	APVD BY
2	12/30/14	SUPPLEMENTAL PRE-FINAL (90%) DESIGN		MBY			TPF
1	9/8/14	PRE-FINAL (90%) DESIGN		MBY			TPF
0	4/5/13	INTERMEDIATE (60%) DESIGN		MBY			TPF

REVISIONS

APPROVED BY: TPF

SO
SUPV TPF
DSGN MBY
DWN MBY, NC
CHKD MF
OK TPF
DATE
SCALES N/A

TOPOCK GROUNDWATER REMEDIATION PROJECT
INNER RECIRCULATION LOOP
INJECTION WELL IRL-1
SITE PLAN
GAS TRANSMISSION & DISTRIBUTION
PACIFIC GAS AND ELECTRIC COMPANY
SAN FRANCISCO, CALIFORNIA

MICROFILM
BILL OF MATL
DWG LIST
SUPSDS
SUPSD BY
SHEET NO. E-05-01 of SHEETS
REV 2

FILENAME: FE-E-XXX-0501AD.dwg
PLOT DATE: Jan 09, 2015 PLOT TIME: 4:31:54pm

N1806

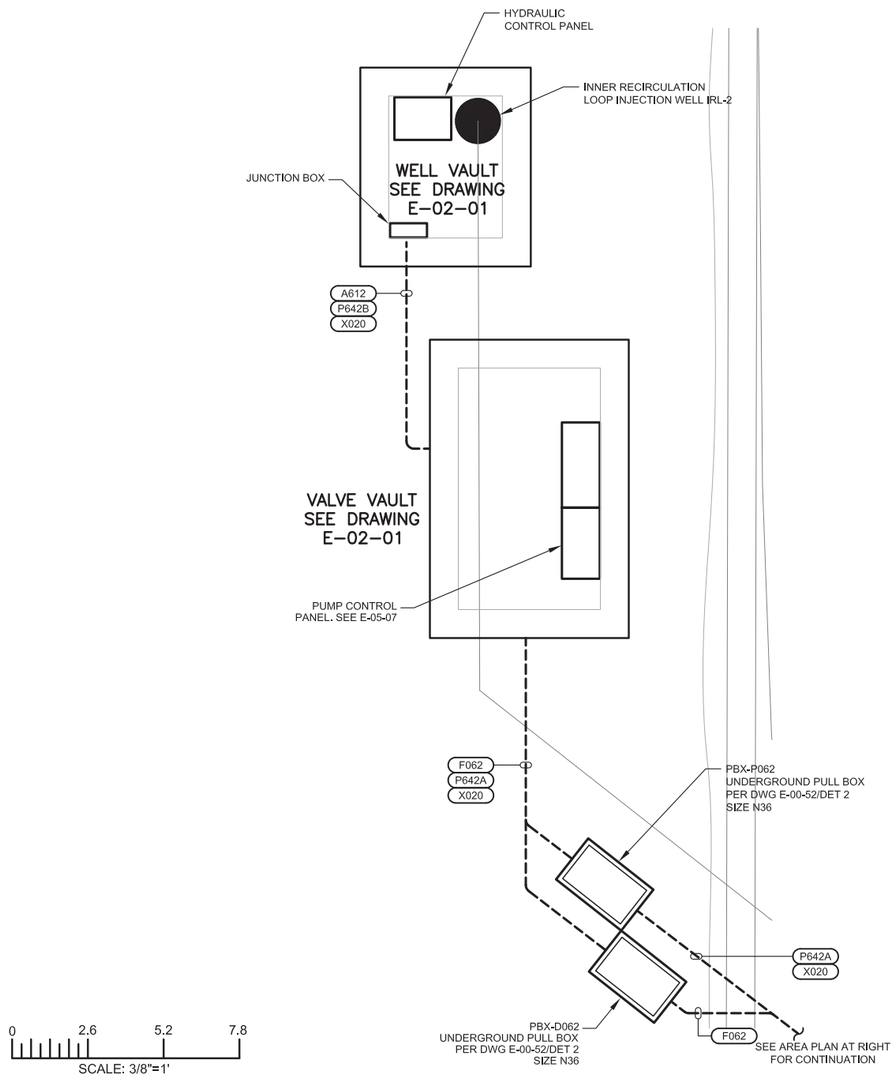

INNER RECIRCULATION LOOP INJECTION WELL IRL-2 ELECTRICAL SITE PLAN

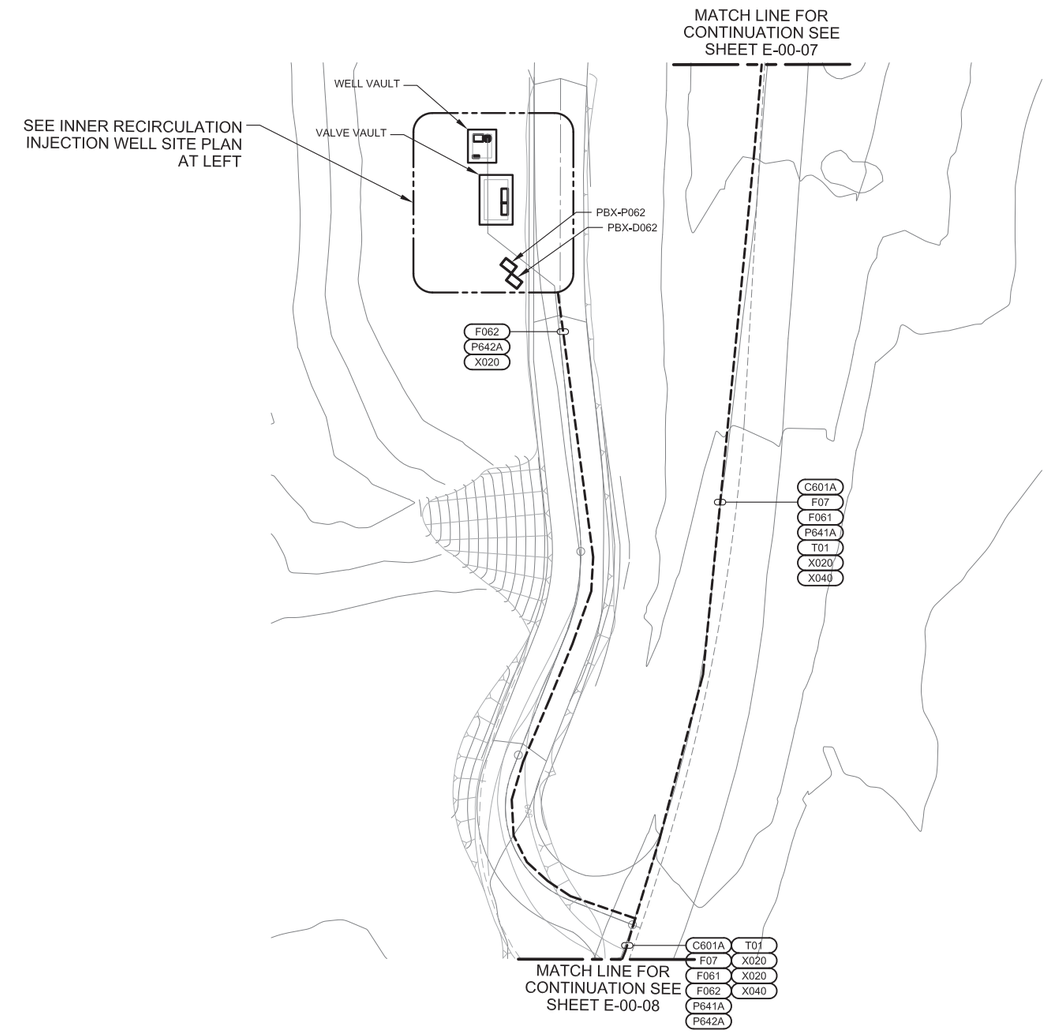

INNER RECIRCULATION LOOP INJECTION WELL IRL-2 AREA PLAN (1)

0 16 32 48
SCALE: 1"=16'

ELECTRICAL PLAN NOTES:

1. SEE ELECTRICAL PLAN NOTES ON DRAWING E-00-02.

ELECTRICAL PLAN NOTES:

1. SEE ELECTRICAL PLAN NOTES ON DRAWING E-00-02.

DRAWING REFERENCED NOTES:

(1) CONDUIT ROUTE AND PULLBOX LOCATIONS SHOWN ARE APPROXIMATE. COORDINATE CONDUIT ROUTE AND PULLBOX LOCATIONS WITH CIVIL PIPELINE ROUTING. SEE DRAWINGS C-05-03 & C-05-05.

DRAFT NOT FOR CONSTRUCTION

FRISCH ENGINEERING, INC.
CONSULTING ELECTRICAL ENGINEERS
13405 FOLSOM BLVD, UNIT 600
FOLSOM, CA 95630
PH 916 353 1025
WWW.FRISCHENGINEERING.COM

CH2MHILL®

REVISIONS

NO.	DATE	DESCRIPTION	GM/SPEC	DWN	CHKD	SUPV	APVD BY
2	12/30/14	SUPPLEMENTAL PRE-FINAL (90%) DESIGN		MBY			TPF
1	9/8/14	PRE-FINAL (90%) DESIGN		MBY			TPF
0	4/5/13	INTERMEDIATE (60%) DESIGN		MBY			TPF

APPROVED BY: TPF

SO
SUPV TPF
DSGN MBY
DWN MBY, NC
CHKD MF
OK TPF
DATE
SCALES N/A

TOPOCK GROUNDWATER REMEDIATION PROJECT
INNER RECIRCULATION LOOP INJECTION WELL IRL-2 SITE PLAN
GAS TRANSMISSION & DISTRIBUTION
PACIFIC GAS AND ELECTRIC COMPANY
SAN FRANCISCO, CALIFORNIA

MICROFILM
BILL OF MATL
DWG LIST
SUPSDS
SUPSD BY
SHEET NO. of SHEETS
E-05-02
REV 2

FILENAME: FE-E-XXX-0501AD.dwg
PLOT DATE: Jan 09, 2015 PLOT TIME: 4:31:31pm

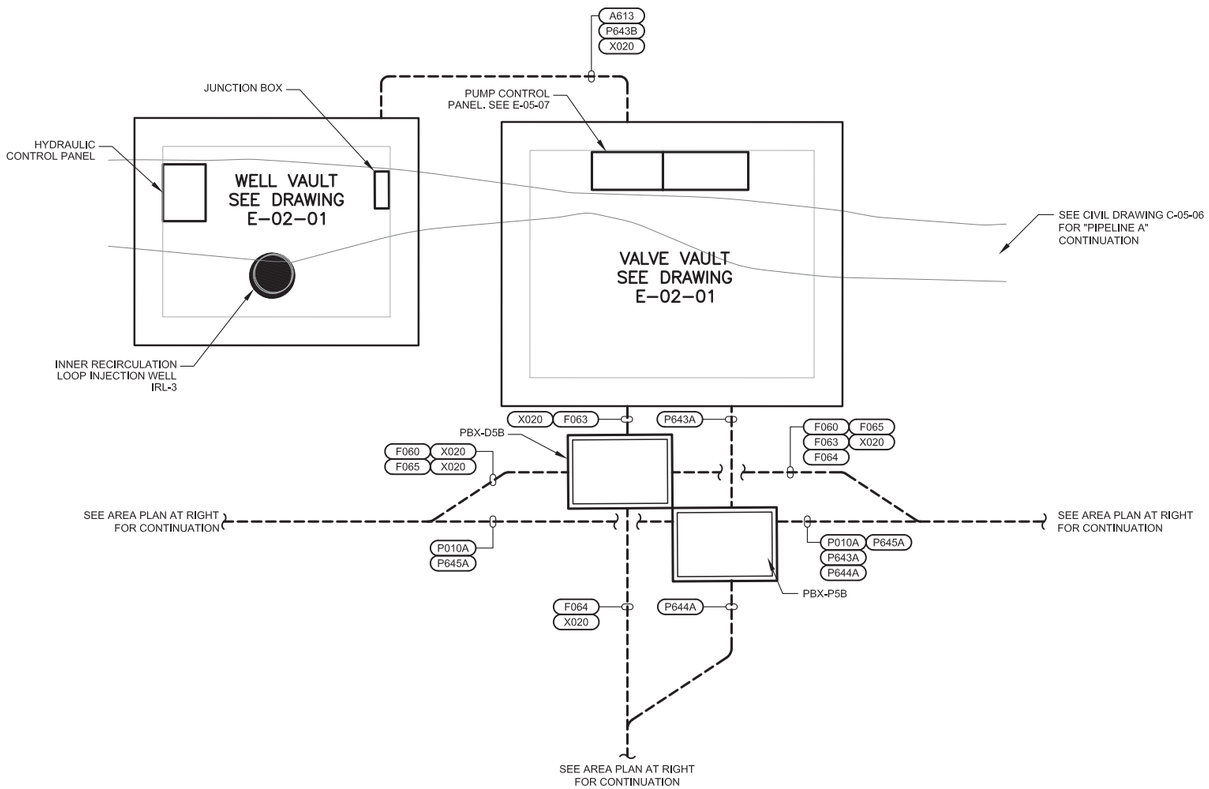

INNER RECIRCULATION LOOP INJECTION WELL IRL-3 ELECTRICAL SITE PLAN

0 2.6 5.2 7.8

SCALE: 3/8"=1'

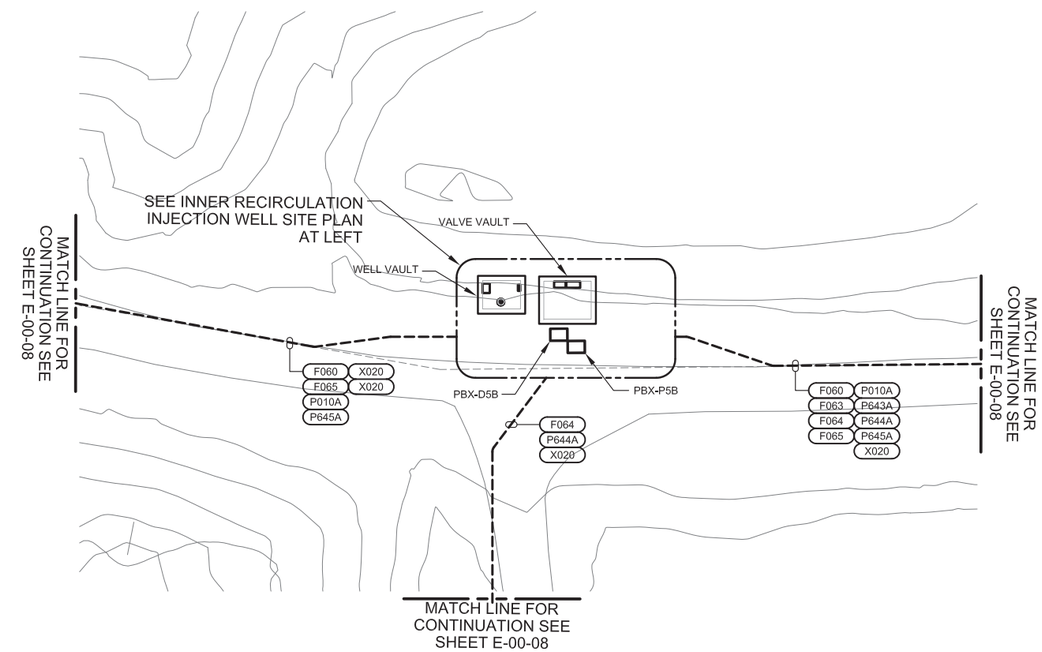

INNER RECIRCULATION LOOP INJECTION WELL IRL-3 ELECTRICAL AREA PLAN (1)

0 16 32 48

SCALE: 1"=16'

ELECTRICAL PLAN NOTES:

1. SEE ELECTRICAL PLAN NOTES ON DRAWING E-00-02.

ELECTRICAL PLAN NOTES:

1. SEE ELECTRICAL PLAN NOTES ON DRAWING E-00-02.

DRAWING REFERENCED NOTES:

(1) CONDUIT ROUTE AND PULLBOX LOCATIONS SHOWN ARE APPROXIMATE. COORDINATE CONDUIT ROUTE AND PULLBOX LOCATIONS WITH CIVIL PIPELINE ROUTING. SEE DRAWINGS C-05-06.

DRAFT NOT FOR CONSTRUCTION

FRISCH ENGINEERING, INC.
CONSULTING ELECTRICAL ENGINEERS
13405 FOLSOM BLVD, UNIT 600
FOLSOM, CA 95630
PH 916 353 1025
WWW.FRISCHENGINEERING.COM

CH2MHILL®

NO.	DATE	DESCRIPTION	GM/SPEC	DWN	CHKD	SUPV	APVD BY
2	12/30/14	SUPPLEMENTAL PRE-FINAL (90%) DESIGN		MBY			TPF
1	9/8/14	PRE-FINAL (90%) DESIGN		MBY			TPF
0	4/5/13	INTERMEDIATE (60%) DESIGN		MBY			TPF

REVISIONS

APPROVED BY: TPF

SO
SUPV TPF
DSGN MBY
DWN MBY, NC
CHKD MF
OK TPF
DATE
SCALES N/A

TOPOCK GROUNDWATER REMEDIATION PROJECT
INNER RECIRCULATION LOOP INJECTION WELL IRL-3 SITE PLAN
GAS TRANSMISSION & DISTRIBUTION
PACIFIC GAS AND ELECTRIC COMPANY
SAN FRANCISCO, CALIFORNIA

MICROFILM
BILL OF MATL
DWG LIST
SUPSDS
SUPSD BY
SHEET NO. of SHEETS
E-05-03
REV 2

FILENAME: FE-E-XXX-0501AD.dwg
PLOT DATE: Jan 09, 2015 PLOT TIME: 4:31:14pm

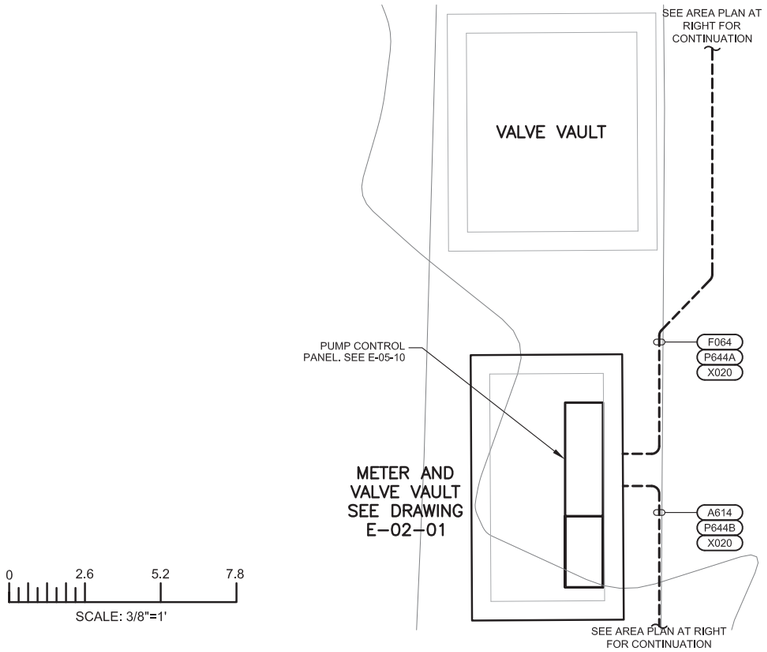

INNER RECIRCULATION LOOP INJECTION WELL IRL-4 VALVE VAULT ELECTRICAL PARTIAL SITE PLAN

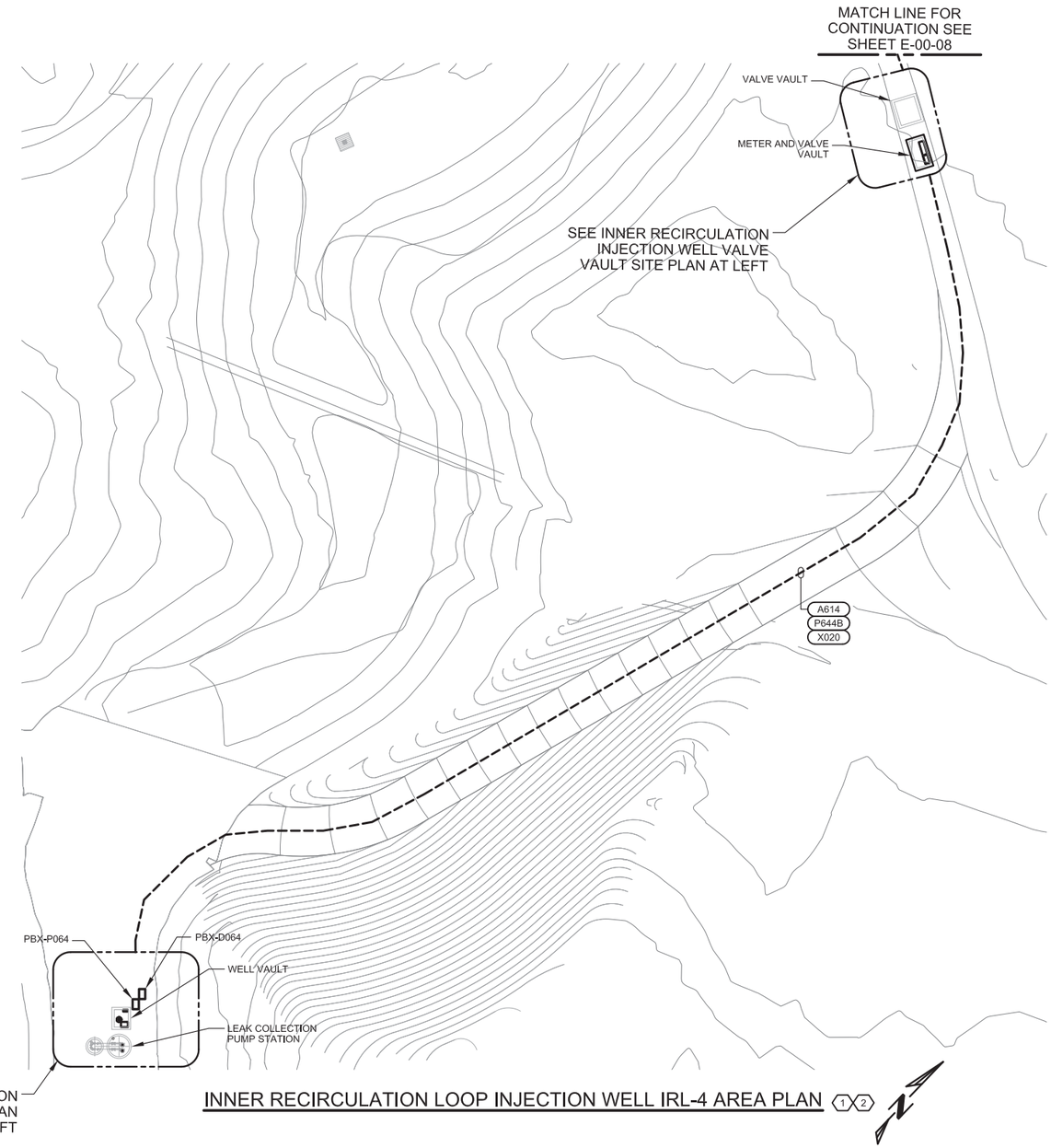

INNER RECIRCULATION LOOP INJECTION WELL IRL-4 AREA PLAN (1)(2)

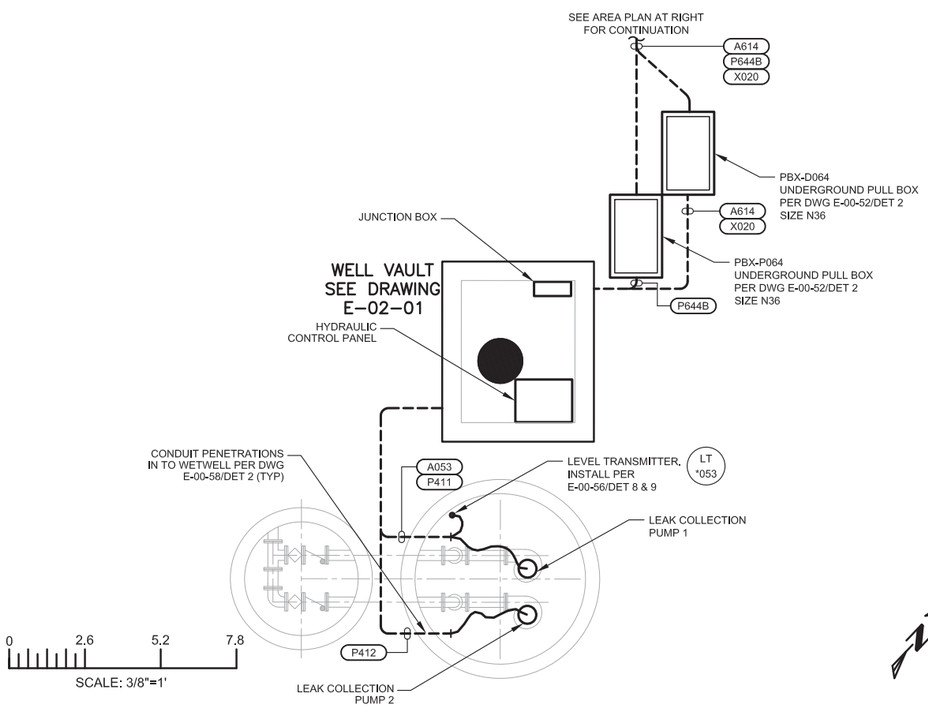

INNER RECIRCULATION LOOP INJECTION WELL IRL-4 WELL VAULT ELECTRICAL PARTIAL SITE PLAN

ELECTRICAL PLAN NOTES:

1. SEE ELECTRICAL PLAN NOTES ON DRAWING E-00-02.

DRAWING REFERENCED NOTES:

(1) CONDUIT ROUTE AND PULLBOX LOCATIONS SHOWN ARE APPROXIMATE. COORDINATE CONDUIT ROUTE AND PULLBOX LOCATIONS WITH CIVIL PIPELINE ROUTING. SEE DRAWINGS C-05-01 & C-05-07.

(2) SEE CIVIL DRAWING C-05-07 FOR "PIPELINE H" PIPING ALIGNMENT

DRAFT NOT FOR CONSTRUCTION

FRISCH ENGINEERING, INC.
CONSULTING ELECTRICAL ENGINEERS
13405 FOLSOM BLVD, UNIT 600
FOLSOM, CA 95630
PH 916 353 1025
WWW.FRISCHENGINEERING.COM

CH2MHILL®

NO.	DATE	DESCRIPTION	GM/SPEC	DWN	CHKD	SUPV	APVD BY
2	12/30/14	SUPPLEMENTAL PRE-FINAL (90%) DESIGN		MBY			TPF
1	9/8/14	PRE-FINAL (90%) DESIGN		MBY			TPF
0	4/5/13	INTERMEDIATE (60%) DESIGN		MBY			TPF

REVISIONS

APPROVED BY: TPF

SO	
SUPV	TPF
DSGN	MBY
DWN	MBY, NC
CHKD	MF
OK	TPF
DATE	
SCALES	N/A

TOPOCK GROUNDWATER REMEDIATION PROJECT
INNER RECIRCULATION LOOP INJECTION WELL IRL-4 SITE PLAN
GAS TRANSMISSION & DISTRIBUTION
PACIFIC GAS AND ELECTRIC COMPANY
SAN FRANCISCO, CALIFORNIA

MICROFILM
BILL OF MATL
DWG LIST
SUPSDS
SUPSD BY
SHEET NO. of SHEETS: E-05-04
REV: 2

FILENAME: FE-E-XXX-0501AD.dwg
PLOT DATE: Jan 09, 2015 PLOT TIME: 4:30:54pm

N1808

FOR CONTINUATION SEE INSET BELOW

NATIONAL TRAIL HWY

PIPELINE "C"

PIPELINE "G"

PIPELINE "A"

PIPELINE "H"

BNSF RAILROAD

COLORADO RIVER

MOHAVE COUNTY HIGHWAY 10

PIPELINE "B"

B&J

NATIONAL TRAIL HWY

PIPELINE "E"

PIPELINE "F"

PG& E TOPOCK
COMPRESSOR STATION

PIPELINE "N"

PIPELINE "T"

PIPELINE "M"

PIPELINE "P"

PIPELINE "I"

PIPELINE "L"

PIPELINE "K"

PIPELINE "D"

TCS

PIPELINE "J"

PIPELINE "C-18"

PIPE 300 ACCESS ROAD

TCS MAIN ACCESS ROAD

ARCH BRIDGE

COLORADO RIVER

C-07-20 C-07-21 C-07-22 C-07-23 C-07-24 C-07-25 C-07-26 C-07-27 C-07-28 C-07-29 C-07-30 C-07-31 C-07-32 C-07-33 C-07-34 C-07-35 C-07-36 C-07-37 C-07-40 C-07-41 C-07-42 C-07-43 C-07-44 C-07-45 C-07-46 C-07-47 C-07-48 C-07-49 C-07-50 C-07-51 C-07-52 C-07-53 C-07-54 C-07-55 C-07-56 C-07-57 C-07-58 C-07-59 C-07-68 C-07-69 C-07-70 C-07-71 C-07-72 C-07-73 C-07-74 C-07-75 C-07-76 C-07-77 C-07-78 C-07-79 C-07-80 C-07-81

INSET

PIPELINE KEY MAP

1" = 300'

0 300 600

SCALE: 1"=300'

LEGEND

- ABOVE GROUND PIPE
- UNDERGROUND PIPE
- BORE AND JACK PIPE
- ON EXISTING BRIDGE

- PIPELINE "A"
- PIPELINE "B"
- PIPELINE "C"
- PIPELINE "D"
- PIPELINE "E"
- PIPELINE "F"
- PIPELINE "G"
- PIPELINE "H"
- PIPELINE "I"
- PIPELINE "J"
- PIPELINE "K"
- PIPELINE "L
- PIPELINE "M"
- PIPELINE "N"
- PIPELINE "P"
- PIPELINE "T"

DRAFT
NOT FOR
CONSTRUCTION

E2 Consulting Engineers, Inc.
1900 Powell Street, Ste. 250
Emeryville, CA 94608
(510) 652-1164

CH2MHILL®

NO.	DATE	DESCRIPTION	GM/SPEC	DWN	CHKD	SUPV	APVD BY
3	12/30/14	SUPPLEMENTAL PRE-FINAL (90%) DESIGN		MD	VMB	VMB	VMB
2	9/8/14	PRE-FINAL (90%) DESIGN		PH	VMB	VMB	VMB
1	4/5/13	INTERMEDIATE (60%) DESIGN		PH	VMB	VMB	VMB
0	11/11/11	PRELIMINARY (30%) DESIGN		PC	VMB	VMB	VMB

REVISIONS

APPROVED BY

SO	
SUPV	VMB
DSGN	PT
DWN	PC/PH
CHKD	VMB
OK	VMB
DATE	12/30/14
SCALES	1"=300'

TOPOCK GROUNDWATER REMEDIATION PROJECT

PIPELINE KEY MAP

GAS TRANSMISSION & DISTRIBUTION
PACIFIC GAS AND ELECTRIC COMPANY
SAN FRANCISCO, CALIFORNIA

MICROFILM
BILL OF MATL
DWG LIST
SUPSDS
SUPSD BY
SHEET NO. of SHEETS
C-07-01
REV 3

PLOT DATE: $PLOTDATE PLOT TIME: $PLOTTIME

FILENAME: E2-C-XXX-0701.dwg

N1808

FOR CONTINUATION SEE INSET BELOW

NATIONAL TRAIL HWY

COLORADO RIVER

MOHAVE COUNTY HIGHWAY 10

BNSF RAILROAD

BNSF RAILROAD

NATIONAL TRAIL HWY

PG&E TOPOCK COMPRESSOR STATION APPROX. BOUNDARY

ARCH BRIDGE

COLORADO RIVER

PIPE 300 ACCESS ROAD

TCS MAIN ACCESS ROAD

INSET

LEGEND

- ABOVE GROUND PIPE
- UNDERGROUND PIPE
- BORE AND JACK PIPE (B&J)
- ON EXISTING BRIDGE

- PIPELINE "A"
- PIPELINE "B"
- PIPELINE "C"
- PIPELINE "D"
- PIPELINE "E"
- PIPELINE "F"
- PIPELINE "G"
- PIPELINE "H"
- PIPELINE "I"
- PIPELINE "J"
- PIPELINE "K"
- PIPELINE "L"
- PIPELINE "M"
- PIPELINE "N"
- PIPELINE "P"
- PIPELINE "T"

PIPELINE SEGMENT MAP

1" = 300'

0 300 600

SCALE: 1"=300'

DRAFT NOT FOR CONSTRUCTION

E2 Consulting Engineers, Inc.
1900 Powell Street, Ste. 250
Emeryville, CA 94608
(510) 652-1164

CH2MHILL®

NO.	DATE	DESCRIPTION	GM/SPEC	DWN	CHKD	SUPV	APVD BY
3	12/30/14	SUPPLEMENTAL PRE-FINAL (90%) DESIGN		MD	PT	VMB	VMB
2	9/8/14	PRE-FINAL (90%) DESIGN		PH	VMB	VMB	VMB
1	4/5/13	INTERMEDIATE (60%) DESIGN		PH	VMB	VMB	VMB
0	11/18/11	PRELIMINARY (30%) DESIGN		PC	VMB	VMB	VMB

REVISIONS

APPROVED BY

SO	
SUPV	VMB
DSGN	PT
DWN	PC/PH
CHKD	PT
OK PT	VMB
DATE	12/30/14
SCALES	

TOPOCK GROUNDWATER REMEDIATION PROJECT

PIPELINE SEGMENT MAP

GAS TRANSMISSION & DISTRIBUTION
PACIFIC GAS AND ELECTRIC COMPANY
SAN FRANCISCO, CALIFORNIA

MICROFILM

BILL OF MATL

DWG LIST

SUPSDS

SUPSD BY

SHEET NO. of SHEETS

C-07-02

REV 3

FILENAME: E2-C-XXX-0702

PLOT DATE: $PLOTDATE PLOT TIME: $PLOTTIME

N1808

						Construction Method					Pipe Service (Diameter in inches)																									
Pipe Section No.	Plan and Profile Sht	Trench Section Sht/Detail	Beg Sta	End Sta	Total Length	UT	CT	AG	BJ	BA	FW	RW	BW	TW	TWB	CA	EX	IRZ	ELECT 120V	ELECT 480V	ELECT 12kV	FO	PROV	SPARE W	SPARE FO	ACID	CAU	COAG	DR	SL	CW	WS	UA	FRW	SC	IA	GRIT
A1	C-07-20	C-07-100/A1	12+50	18+61	611	611					6	6								2		2		6	2												
A2	C-07-20	C-07-100/A2	18+61	20+44	183		183				6	6								2		2			2												
A8	C-07-20,21	C-07-102/A8	20+44	21+48	104		104				6	6				6				2		4, 2-2			2												
A3	C-07-21	C-07-100/A3	21+48	22+90	142		142				2 - 6	6				6				4 - 2		4 - 2			2												
A4	C-07-21	C-07-100/A4	22+90	26+91	401		401				2 - 6	6				6				2	4 (Encased)	4, 2			2												
A5	C-07-21	C-07-100/A5	26+91	28+56	165	165					2 - 6	6				6				2	4 (Encased)	4, 2		6	2												
A6	C-07-21,22	C-07-100/A6	28+56	31+29	273	273					2 - 6	8				6					4 (Encased)	4		8	4												
A9	C-07-22	S-07-04	31+29	32+73	144	144					2 - 6	8				6				1	4	4		8	4												
A10	C-07-22	C-07-102/A10	32+73	35+51	207	207					2 - 6	8				6				1	4 (Encased)	4		8	4												
A7	C-07-22,23	C-07-101/A7	35+51	37+21	170		170				2 - 6	8				6					4 (Encased)	4			4												
A10	C-07-23	C-07-102/A10	37+21	44+70	749	749					2 - 6	8				6					4 (Encased)	4		8	4												
A11	C-07-23,24	C-07-101/131/A11	44+70	54+91	1021	1021					2 - 6	8				6	4				4 (Encased)	4		8	4												
B1	C-07-26,27	C-07-103/B1	3+05	20+43	1738	1738					12										Buried Cable			6													
B2	C-07-27,28	C-07-103/B2	20+43	30+50	1007	1007					12													6													
B3	C-07-29	C-07-83	30+50	40+18	968					968	12																										
B4	C-07-30	C-07-101/B4	40+18	43+30	312	312					12																										
B5	C-07-30	C-07-101/B5	43+30	45+15	185				185		12																										
B4	C-07-30	C-07-101/B4	45+15	46+63	148	148					12																										
B6	C-07-30	C-07-101/B6	46+63	48+12	149	149					12																										
B4	C-07-30,31,32,33	C-07-101/B4	48+12	77+35	2923	2923					12																										
B4	C-07-33,34,35,36,37	C-07-101/B4	77+35	109+10	3175	3175					12																										
B7	C-07-37	C-07-09/6	109+10	110+10	100	100					12																										
B4	C-07-37	C-07-101/B4	110+10	112+59	249	249																															
C1	C-07-39	C-07-108	10+00	10+39	39	39											6			2, 2		2		6	2												
C2	C-07-39	C-07-108	10+39	13+11	272	272							2				6	4		2, 2, 2, 2,3,3,3		2		6	2												
C3	C-07-39,40,41	C-07-108	13+11	21+22	811	811							2				6, 6	6		2,2,2,2,2,2,2,2,3,3,3	YES	2		6	2												
C4	C-07-41	C-07-108	21+22	22+75	153	153					3 - 8		6 - 2				6, 6	6		2,2,2	YES	2		6, 6	2												
C5	C-07-43,44	C-07-108	10+00	18+98	898	898					2 - 8	6	2	2	6		6, 4	6		2,2,2,2	YES	2		6, 6, 6, 6	2								6	10		
C6	C-07-41	C-07-108	22+75	26+00	325	325					3 - 8	6	6, 2 - 2	2	6		6, 6	6, 6		2,2,2,2,2,2,3	YES	2	3x6"	6,6,6,6,6,	2								6	10		
C7	C-07-44	C-07-73/G	18+98	20+48	150	150					2 - 8	6	2	2	6			6		3,3,3,3,3,3	YES	2	3x6"	6, 6, 6, 6	2								6	10		
C8	C-07-44,45,46	C-07-74/A	20+48	27+00	652	652					2 - 8	6	2	2	6			4			YES	2	3x6"	6, 6, 6, 6	2								6	10		
C9	C-07-46	C-07-74/B	27-00	28+88	188				188		2 - 8	6	2	2	6			4			YES	2	3x6"	6, 6, 6, 6	2								6	10		
C8	C-07-46	C-07-74/A	28+88	29+50	62	62					2 - 8	6	2	2	6			4			YES	2	3x6"	6, 6, 6, 6	2								6	10		
C10	C-07-47	C-07-74/C	29+50	30+55	105	105					2 - 8	6		2	6		4			2,2	YES	2	3x6"	6, 6, 4	2								6			
C11	C-07-47,48	C-07-74/E	30+55	38+93	838	838											2			2,2,2,2,2	YES	2			2											
C13	C-07-42	C-07-74/G	10+25	12+70	245		245					2	2					6		4 x 2		2		4													
C14	C-07-49,50	C-07-75/1	10+00	14+50	450	450						2	2				6	4		3,3,3,3,3,3,2,2,2,2	YES	2		4	2									10		
C15	C-07-50	C-07-75/1	10+00	11+93	193	193						2	2				6	4		4 x 2		2		4													
C16	C-07-50	C-07-75/1	11+93	15+74	381	381						2	2				6	4		4 x 2		2		4													
C17	C-07-51	C-07-75/2	10+00	12+46	246		246					2	2				4	6						4													
C18	C-07-59	C-07-76/E	10+00	16+45	645	645											2			2		2			2												
D1	C-07-79	C-07-103A/D1	75+00	75+81	81	81								2						4		4							6								
D2	C-07-79	C-07-103A/D2	75+00	77+75	275	275														4		4															
E1	C-07-53	C-07-75/3	10+00	14+43	443		443				3	2	2	2	6	3	4, 2, 2			8 x 2	YES	2		6										6			
F1	C-07-52	C-07-75/4	10+00	14+00	400		400				2 - 8	6	6	2	6		2			2,2,2,2,2,2,2	YES	2		6, 6, 4	2								6			
F2	C-07-52	C-07-75/4	14+00	14+40	40		40				3	6	6	2	6		2			2,2,2,2,2,2,2	YES	2		6, 6, 4	2								6			
F3	C-07-52	C-07-75/4	14+40	15+00	100		100				2	6		2		3	2				YES	2		6,6													
F4	C-07-52	C-07-75/4	15+00	16+10	110		110				2	6		2		3	2				YES	2		6,6													
F5	C-07-70,	C-07-104/F5	15+33	17+75	242		242				2	8		2		3						4	2-6										6			
F6	C-07-70, 71	C-07-104/F6	17+75	20+93	318		318				2	8		2		3						4	2-6										6			
F7	C-07-71	C-07-104/F7	20+93	23+00	207		207				2	8		2		3						4	2-7										6	4		
F8	C-07-72	C-07-104/F8	23+00	26+25	325		325				2	8		2		3						4	2-8										6			
G1	C-07-54,55	C-07-76/A	10+00	13+78	378	378											6			3, 3, 3		2			2												
G2	C-07-55,56	C-07-76/B	13+78	19+47	569	569											6			3, 3		2			2												
G3	C-07-56	C-07-76/C	19+47	22+65	318	318											6			3		2			2												
G4	C-07-56, 57	C-07-76/A	22+65	25+57	292	292											6			3, 3		2			2												
G5	C-07-57, 58	C-07-76/D	25+57	30+35	478	478											6			3, 3, 3		2			2												
G6	C-07-58	C-07-76/B	30+35	33+21	286	286											6			3, 3, 3, 3, 3		2			2												
H1	C-07-25	C-07-101/H1	10+00	14+18	409	409					6	6				6				3 - 2		2		6	2				4					10		
H2	C-07-25	C-07-101/H2	14+18	15+33	124	124					6	6				6				2		2		6	2												
I1	C-07-78	C-07-101/I1	8+00	9+90	190	190					2	4								4		2		4	2												
I2	C-07-78	S-07-12	9+90	11+50	160					160	4	4								4		4															
I3	C-07-78	C-07-101/I1	11+50	12+89	139	139					2	4								4		2		4	2												
J1	C-07-68, 69	C-07-103A/J1	8+31	15+83	752	752					2 - 8										Buried Cable																
K1	C-07-73	C-07-107/K1	90+00	91+11	111		111				4	4		2 - 2						4		4	2 - 2						6			2					
L1	C-07-74	C-07-106/L1	80+00	80+75	75		75				6			2 - 2						4		4	2 - 2			2	2						2			2	
L2	C-07-74	C-07-106/L2	80+75	81+48	73		73				6			2 - 2						4		4	2 - 2			2	2		6				2			2	
L3	C-07-74	C-07-106/L3	81+48	83+95	247		247				3	4		3 - 2						4		4	2 - 2			2	2					2 - 2	2			2	
M1	C-07-75	C-07-105/M1	59+27	59+75	48		48				4	8, 2 - 2		2		3				4		4	2 -2			2	2	2		2	2 - 1-1/4	2 - 2	2	6		2	
M2	C-07-75	C-07-105/M2	59+75	61+35	160		160					8		2		3				4		4	2 - 2									2 - 2					2
M3	C-07-75	C-07-105/M3	61+35	62+05	70		70				4	3		2 - 2		3				4		4	2 - 2									2					2
M4	C-07-75,76	C-07-105/M4	62+05	67+02	497		497				4	3				3				4		4	2 - 3														2
M5	C-07-76	C-07-106/M5	67+02	68+15	113		113				4	3				3				4		4	2 - 3												4		
M4	C-07-76	C-07-105/M4	68+15	70+30	215		215				4	3				3				4		4	2 - 3														2
N1	C-07-77	C-07-107/N1	85+00	86+38	138	138					4	3				3				4		4													4		
P1	C-07-80	C-07-107/P1	50+00	51+42	142	142								2 - 2																		2					
T1	C-07-81	C-07-107/T1	60+00	60+85	85	85																															2
				Totals	30,387	23,601	5,285	0	373	1,128	30,389	14,992	6,387	6,537	3,263	6,895	12,864	5,351	318	49,654	11,345	19,124	9,848	21,968	13,381	443	443	48	674	48	48	888	443	4,403	3,592	443	1,027

UT - Underground Trench; CT - Concrete Trench; AG - Above Ground Piping; BJ - Bore and Jack; BA - Bridge Attachment; FW - Freshwater; RW - Remedy Wastewater (force main); TW - Treated Water; CA - Carbon Amended Water (FW, TW or EX treated with carbon); DR - Drain
EX - Extracted water (from wells); IRZ - Insitu reactive zone (water recirculated from IRZ wells); ELECT 480V - Three phase power and distribution; ELECT 12kV - Electrical power and transmission conduit; FO - Fiber Optic; PROV - Provisional for future wells;
Spare W - Spare water lines; Spare FO - Spare fiber optic; ACID - Acid; CAU - Caustic; COAG - Coagulant; DR - Drain; SL - Slurry; CW - Chilled Water; WS - Wastewater; UA - Utility Air; FRW - Fire water suppression; IA - Instrument air; SC - Secondary Containment

DRAFT
NOT FOR
CONSTRUCTION

E2 Consulting Engineers, Inc.
1900 Powell Street, Ste. 250
Emeryville, CA 94608
(510) 652-1164

CH2MHILL®

NO.	DATE	DESCRIPTION	GM/SPEC	DWN	CHKD	SUPV	APVD BY
3	12/30/14	SUPPLEMENTAL PRE-FINAL (90%) DESIGN)		MD	PT	VMB	VMB
2	9/8/14	PRE-FINAL (90%) DESIGN		PH	PT	VMB	VMB
1	4/5/13	INTERMEDIATE (60%) DESIGN		PC	PT	VMB	VMB
0	11/18/11	PRELIMINARY (30%) DESIGN		PC	PT	VMB	VMB

REVISIONS

APPROVED BY
SO
SUPV VMB
DSGN PT
DWN PC
CHKD VMB
OK VMB
DATE 12/30/14
SCALES N/A

TOPOCK GROUNDWATER REMEDIATION PROJECT

PIPE SCHEDULE

GAS TRANSMISSION & DISTRIBUTION
PACIFIC GAS AND ELECTRIC COMPANY
SAN FRANCISCO, CALIFORNIA

MICROFILM
BILL OF MATL
DWG LIST
SUPSDS
SUPSD BY
SHEET NO. of SHEETS
C-07-03
REV 3

FILENAME: E2-C-XXX-0703AD.DWG
PLOT DATE: $PLOTDATE PLOT TIME: $PLOTTIME
C:\CAD\dwg\Topock\90% plus drawings\REVISED ALIGNMENT\01-15\E2-C-XXX-0703.DWG, 1/9/2015 3:35:46 PM

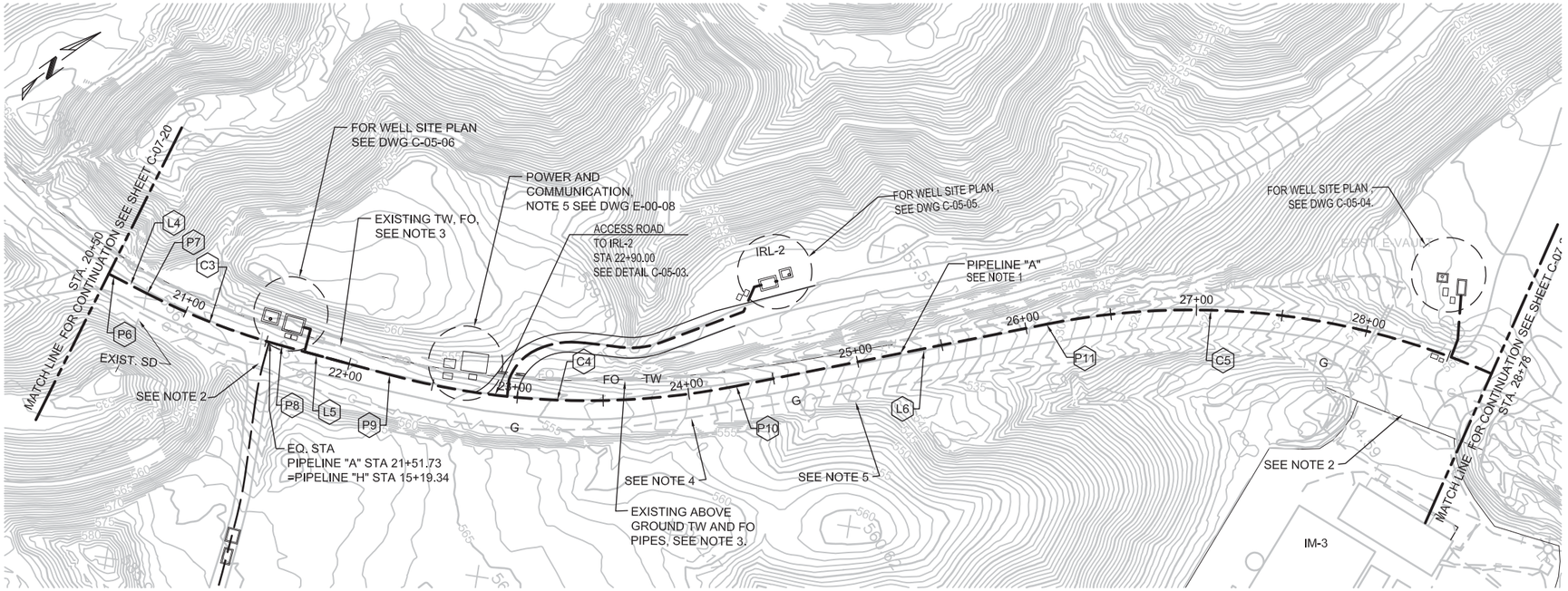

PIPELINE "A" - PLAN

(SCALE: 1" = 40' H)

NOTES:

1. THE NEW PIPELINE ALIGNMENT SHOWS CENTER OF TRENCH.
2. PROVIDE VEHICLE ACCESS AT OWNER'S DIRECTION - AT ALL TIMES FOR IM-3 ENTRANCE ROAD
3. PROTECT ABOVE GROUND PIPES IN PLACE.
4. MAINTAIN 3' MINIMUM HORIZONTAL CLEARANCE FROM EXISTING GAS LINE.
5. PROTECT EXISTING FLAGSTONE CUTTER IN PLACE.
6. FOR ELECTRICAL (PDX-DXX) COMMUNICATIONS (PDX-TXX) SEE DWGS E-00-07 AND E-00-08.

POINT TABLE

POINT	DESC	STATION	NORTHING	EASTING
P6	EC	20+53.38	2102740.23	7613902.46
P7	BC	20+75.22	2102750.06	7613921.96
P8	EC	21+59.32	2102795.48	7613992.56
P9	BC	22+23.61	2102835.75	7614042.67
P10	EC	24+28.08	2102995.39	7614167.52
P11	BC	26+12.18	2103162.47	7614244.84

LINE TABLE

LINE	BEG POINT	END POINT	DISTANCE	BEARING
L4	P6	P7	21.84	N 63° 15' 57" E
L5	P8	P9	64.29	N 51° 13' 09" E
L6	P10	P11	184.10	N 24° 50' 02" E

CURVE TABLE

CURVE	BC	EC	LENGTH	DELTA	RADIUS	TANGENT
C3	P7	P8	84.10	12° 02' 48"	400.00	42.21
C4	P9	P10	204.47	26° 23' 08"	444.00	104.08
C5	P11	P12	297.25	39° 36' 29"	430.00	154.84

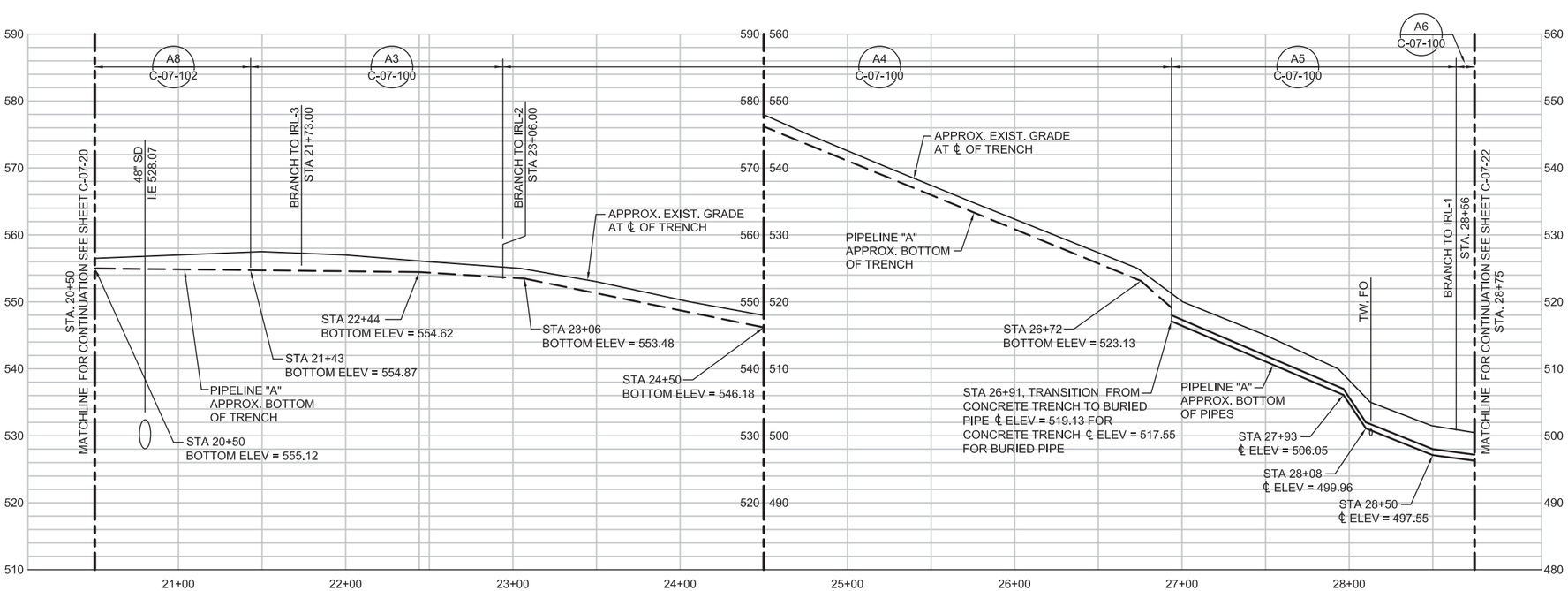

PIPELINE "A" - PROFILE

(SCALE: 1" = 40' H; 1" = 10' V)

HORZ: SCALE: 1"=40'

VERT: SCALE: 1"=10'

DRAFT
NOT FOR
CONSTRUCTION

E2 Consulting Engineers, Inc.
1900 Powell Street, Ste. 250
Emeryville, CA 94608
(510) 652-1164

CH2MHILL®

NO.	DATE	DESCRIPTION	GM/SPEC	DWN	CHKD	SUPV	APVD BY
3	12/30/14	SUPPLEMENTAL PRE-FINAL (90%) DESIGN		WTH	PT	PT	VMB
2	9/8/14	PRE-FINAL (90%) DESIGN		PH	VMB	VMB	VMB
1	4/5/13	INTERMEDIATE (60%) DESIGN		PC	VMB	VMB	VMB
0	11/18/11	PRELIMINARY (30%) DESIGN		PC	VMB	VMB	VMB

REVISIONS

APPROVED BY

SO	
SUPV	VMB
DSGN	PT
DWN	PH
CHKD	VMB
OK	VMB
DATE	12/30/14
SCALES	

TOPOCK GROUNDWATER REMEDIATION PROJECT
PLAN AND PROFILE
PIPELINE "A"
STA 20+50 TO STA 28+75
GAS TRANSMISSION & DISTRIBUTION
PACIFIC GAS AND ELECTRIC COMPANY
SAN FRANCISCO, CALIFORNIA

MICROFILM
BILL OF MATL
DWG LIST
SUPSDS
SUPSD BY
SHEET NO. of SHEETS
C-07-21
REV 3

FILENAME: E2-C-XXX-0721.dwg
PLOT DATE: $PLOTDATE PLOT TIME: $PLOTTIME
C:\CAD\dwg\Topock\90% plan drawings\REVISED ALIGNMENT\01-15\E2-C-XXX-0721.dwg, 12/31/2014 10:59:40 AM
N180B

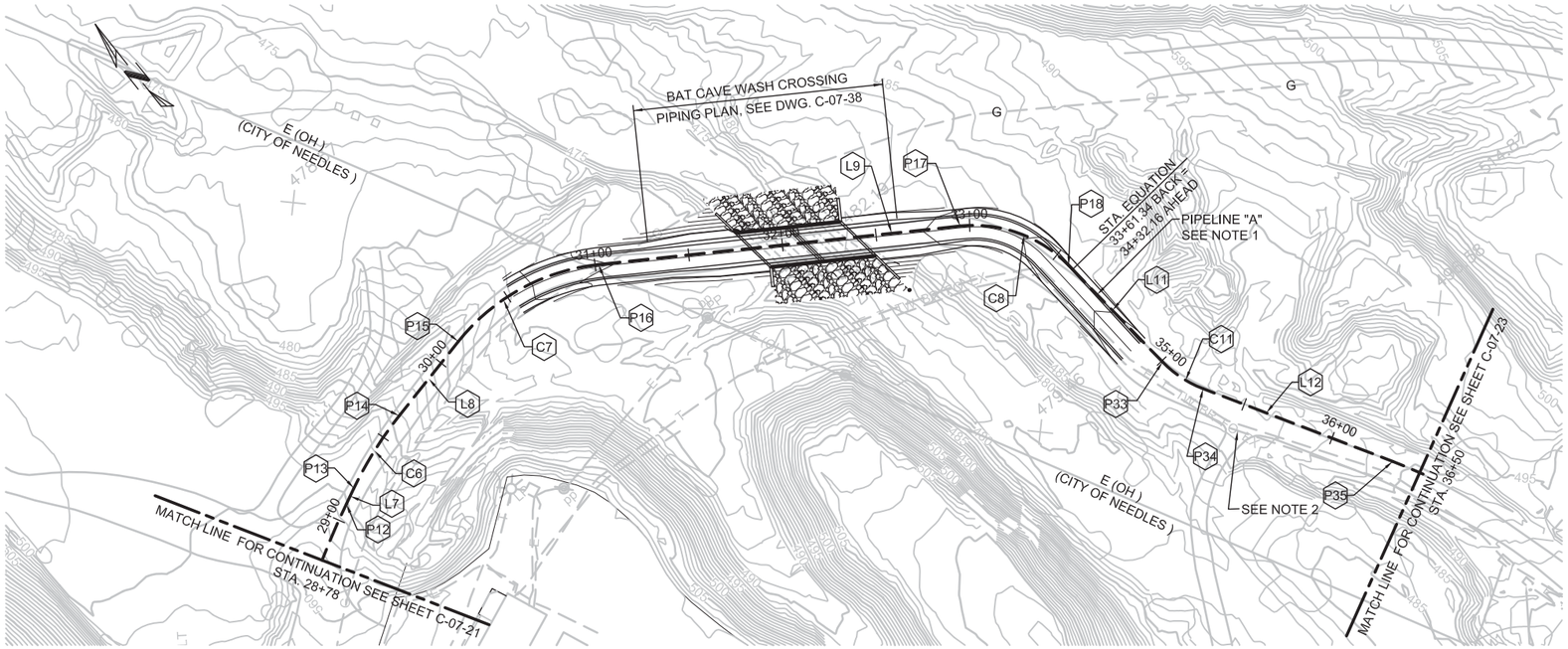

PIPELINE "A" - PLAN

(SCALE: 1" = 40' H)

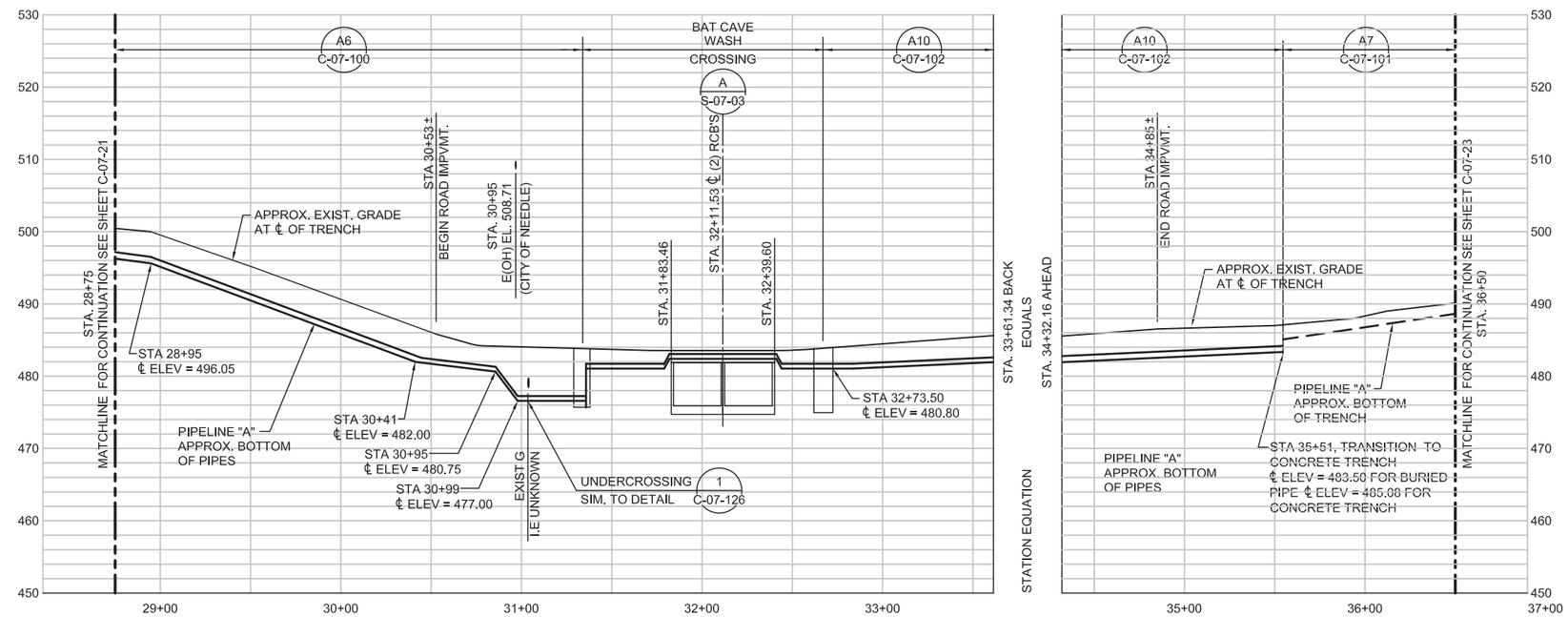

PIPELINE "A" - PROFILE

(SCALE: 1" = 40' H; 1" = 10' V)

NOTES:

1. THE NEW PIPELINE ALIGNMENT SHOWS CENTER OF TRENCH.
2. PROVIDE VEHICLE ACCESS AT OWNER'S DIRECTION.
3. MAINTAIN 3' MINIMUM HORIZONTAL CLEARANCE FROM EXISTING IM-3 PIPING (E, T, TW, BR & FO)

POINT TABLE

POINT	DESC	STATION	NORTHING	EASTING
P12	EC	29+09.43	2103369.80	7614449.56
P13	BC	29+18.81	2103373.84	7614458.03
P14	EC	29+64.22	2103388.64	7614500.86
P15	BC	30+14.65	2103399.59	7614550.08
P16	EC	31+01.82	2103384.63	7614633.65
P17	BC	32+94.84	2103279.91	7614795.81
P18	EC	33+58.23	2103227.52	7614827.54
P33	BC	35+00.68	2103156.19	7614834.11
P34	EC	35+26.66	2103131.63	7614841.93
P35	BC	36+34.50	2103038.31	7614895.96

LINE TABLE

LINE	BEG POINT	END POINT	DISTANCE	BEARING
L7	P12	P13	9.38	N 64° 26' 30" E
L8	P14	P15	50.43	N 77° 27' 06" E
L9	P16	P17	193.03	S 57° 08' 43" E
L11	P18	P33	71.63	S 05° 15' 48" E
L12	P34	P35	107.84	S 30° 04' 13" E

CURVE TABLE

CURVE	BC	EC	LENGTH	DELTA	RADIUS	TANGENT
C6	P13	P14	45.41	13° 00' 35"	200.00	22.80
C7	P15	P16	87.17	45° 24' 11"	110.00	46.02
C8	P17	P18	63.39	51° 52' 55"	70.00	34.05
C11	P33	P34	25.98	24° 48' 26"	60.00	13.20

0 40 80 120
HORZ: SCALE: 1"=40'

0 10 20 30
VERT: SCALE: 1"=10'

DRAFT
NOT FOR
CONSTRUCTION

E2 Consulting Engineers, Inc.
1900 Powell Street, Ste. 250
Emeryville, CA 94608
(510) 652-1164

CH2MHILL®

NO.	DATE	DESCRIPTION	GM/SPEC	DWN	CHKD	SUPV	APVD BY
3	12/30/14	SUPPLEMENTAL PRE-FINAL (90%) DESIGN		WTH	PT	PT	VMB
2	9/8/14	PRE-FINAL (90%) DESIGN		PH	PT	PT	VMB
1	4/5/13	INTERMEDIATE (60%) DESIGN		PC/EE	PT	PT	VMB
0	11/18/11	PRELIMINARY (30%) DESIGN		PC	PT	PT	VMB

REVISIONS

APPROVED BY

SO	
SUPV	VMB
DSGN	PT
DWN	PC/EE
CHKD	VMB
OK	VMB
DATE	12/30/14
SCALES	

TOPOCK GROUNDWATER REMEDIATION PROJECT
PLAN AND PROFILE
PIPELINE "A"
STA 28+75 TO STA 36+50
GAS TRANSMISSION & DISTRIBUTION
PACIFIC GAS AND ELECTRIC COMPANY
SAN FRANCISCO, CALIFORNIA

MICROFILM
BILL OF MATL
DWG LIST
SUPSDS
SUPSD BY
SHEET NO. of SHEETS
C-07-22
REV 3

FILENAME: E2-C-XXX-07'22.dwg
PLOT DATE: $PLOTDATE PLOT TIME: $PLOTTIME
C:\CAD\dwg\Topock\90% plus\drawings\REVISED ALIGNMENT\01-15\E2-C-XXX-07'22.dwg, 12/31/2014 11:07:04 AM

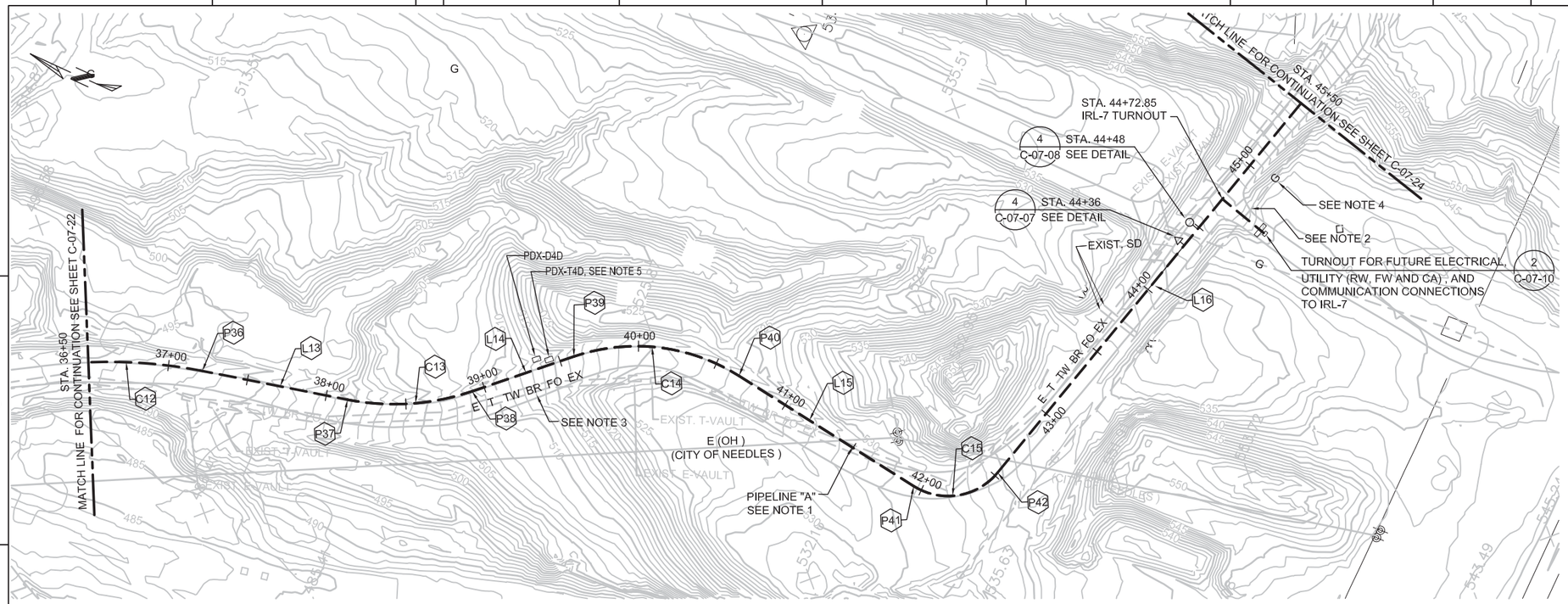

PIPELINE "A" - PLAN

(SCALE: 1" = 40' H)

NOTES:

1. THE NEW PIPELINE ALIGNMENT SHOWS CENTER OF TRENCH.
2. PROVIDE VEHICLE ACCESS AT OWNER'S DIRECTION.
3. MAINTAIN 3' MINIMUM HORIZONTAL CLEARANCE FROM EXISTING IM-3 PIPING (E, T, TW, BR & FO)
4. MAINTAIN 3' MINIMUM HORIZONTAL CLEARANCE FROM EXISTING GAS PIPING.
5. FOR ELECTRICAL (PDX-DXX) AND COMMUNICATIONS (PDX-TXX) SEE DWGS E-00-07 AND E-00-08

POINT TABLE

POINT	DESC	STATION	NORTHING	EASTING
P36	EC	37+21.37	2102957.92	7614928.08
P37	BC	38+13.50	2102868.32	7614949.55
P38	EC	38+92.10	2102800.03	7614986.62
P39	BC	39+59.06	2102751.46	7615032.71
P40	EC	40+66.08	2102652.99	7615064.62
P41	BC	41+94.68	2102525.52	7615047.61
P42	EC	42+52.50	2102481.55	7615077.07

LINE TABLE

LINE	BEG POINT	END POINT	DISTANCE	BEARING
L13	P36	P37	92.13	S 13° 28' 46" E
L14	P38	P39	66.95	S 43° 30' 10" E
L15	P40	P41	128.60	S 07° 35' 51" W
L16	P42	P43	335.11	S 75° 13' 48" E

CURVE TABLE

CURVE	BC	EC	LENGTH	DELTA	RADIUS	TANGENT
C12	P35	P36	86.87	16° 35' 27"	300.00	43.74
C13	P37	P38	78.60	30° 01' 24"	150.00	40.22
C14	P39	P40	107.02	51° 06' 01"	120.00	57.37
C15	P41	P42	57.82	82° 49' 39"	40.00	35.28

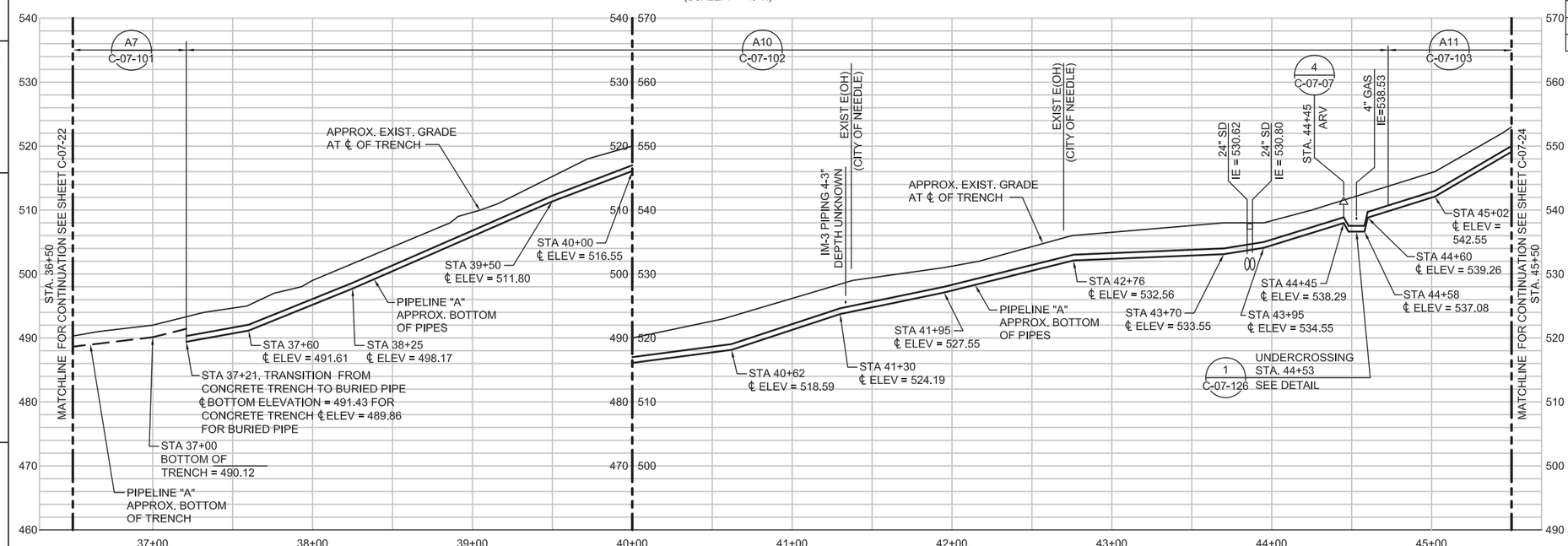

PIPELINE "A" - PROFILE

(SCALE: 1" = 40' H; 1" = 10' V)

HORZ: SCALE: 1"=40'

VERT: SCALE: 1"=10'

DRAFT
NOT FOR
CONSTRUCTION

E2 Consulting Engineers, Inc.
1900 Powell Street, Ste. 250
Emeryville, CA 94608
(510) 652-1164

CH2MHILL®

NO.	DATE	DESCRIPTION	GM/SPEC	DWN	CHKD	SUPV	APVD BY
3	12/30/14	SUPPLEMENTAL PRE-FINAL (90%) DESIGN		WTH	PT	PT	VMB
2	9/8/14	PRE-FINAL (90%) DESIGN		PH	PT	PT	VMB
1	4/5/13	INTERMEDIATE (60%) DESIGN		PC/EE	PT	PT	VMB
0	11/18/11	PRELIMINARY (30%) DESIGN		EE	PT	PT	VMB

REVISIONS

APPROVED BY

SO
SUPV VMB
DSGN PT
DWN PC/EE
CHKD VMB
OK VMB
DATE 12/30/14
SCALES

TOPOCK GROUNDWATER REMEDIATION PROJECT
PLAN AND PROFILE
PIPELINE "A"
STA 36+50 TO STA 45+00
GAS TRANSMISSION & DISTRIBUTION
PACIFIC GAS AND ELECTRIC COMPANY
SAN FRANCISCO, CALIFORNIA

MICROFILM
BILL OF MATL
DWG LIST
SUPSDS
SUPSD BY
SHEET NO. of SHEETS
C-07-23
REV 3

FILENAME: E2-C-XXX-0723.dwg
PLOT DATE: $PLOTDATE PLOT TIME: $PLOTTIME
C:\CAD\dwg\Topock\90% plans\drawings\REVISED ALIGNMENT\01-15\E2-C-XXX-0723.dwg, 12/31/2014 12:27:52 PM
N1808

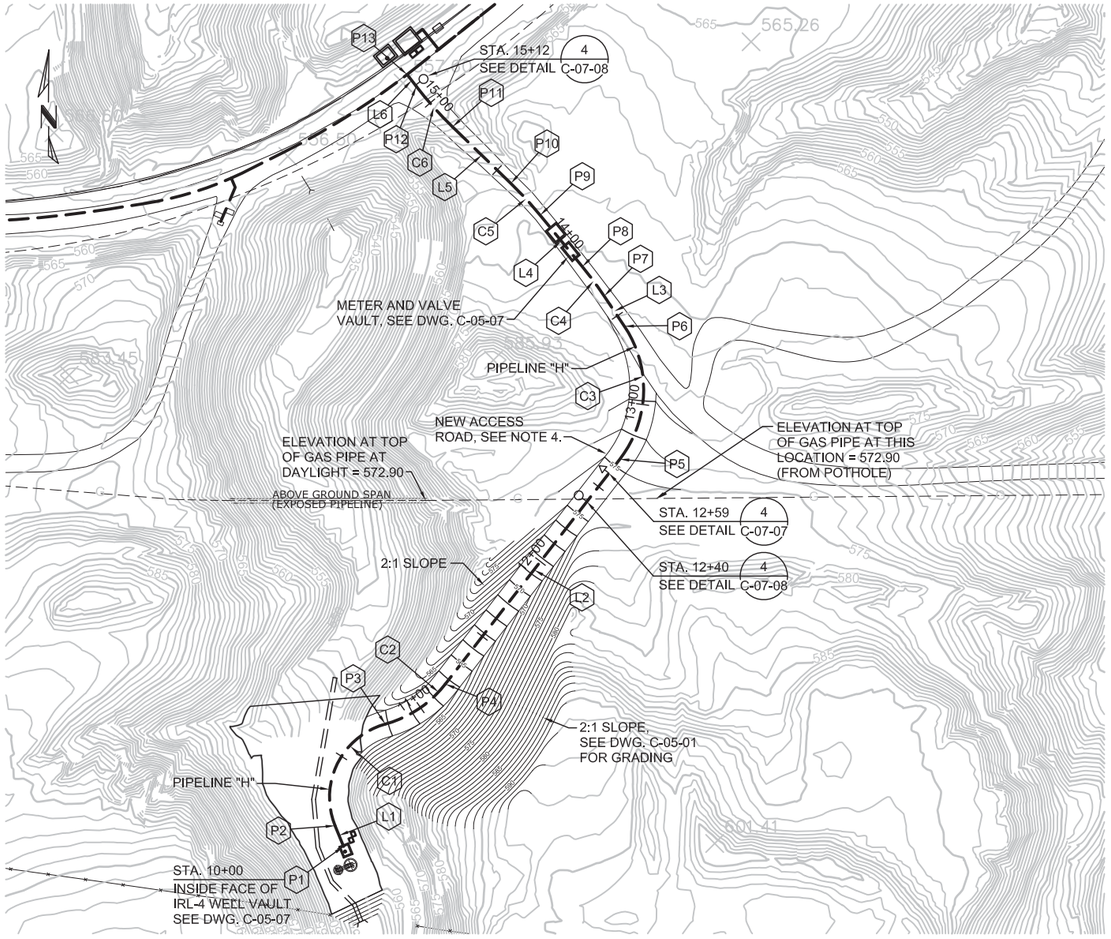

PIPELINE "H" - PLAN

(SCALE: 1" = 40' H)

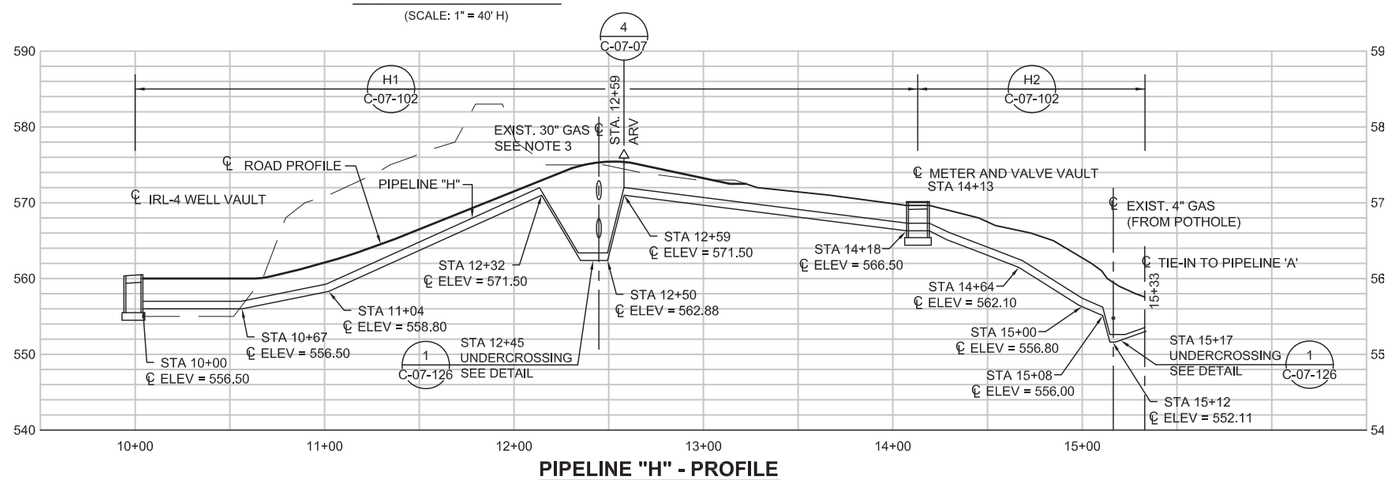

PIPELINE "H" - PROFILE

(SCALE: 1" = 40' H; 1" = 10' V)

POINT TABLE				
POINT	DESC	STATION	NORTHING	EASTING
P1	BEGIN	10+00.00	2102383.38	7613952.99
P2	BC	10+11.76	2102394.28	7613948.56
P3	EC, BC	10+79.42	2102447.94	7613975.11
P4	EC	11+18.13	2102469.05	7614006.76
P5	BC	12+68.35	2102587.74	7614098.85
P6	EC	13+43.36	2102657.92	7614101.30
P7	BC	13+62.54	2102673.85	7614090.62
P8	EC	13+81.93	2102689.41	7614079.07
P9	BC	14+17.01	2102716.53	7614056.81
P10	EC	14+39.87	2102733.34	7614041.34
P11	BC	14+82.77	2102763.18	7614010.52
P12	EC	15+11.49	2102784.57	7613991.39
P13	END	15+19.34	2102790.78	7613986.59

LINE TABLE				
LINE	BEG POINT	END POINT	DISTANCE	BEARING
L1	P1	P2	11.76	N 22° 07' 59" W
L2	P4	P5	150.29	N 37° 48' 33" E
L3	P6	P7	19.18	N 33° 49' 05" W
L4	P8	P9	35.08	N 39° 22' 19" W
L5	P10	P11	42.90	N 45° 55' 13" W
L6	P12	P13	7.85	N 37° 41' 34" W

CURVE TABLE						
CURVE	BC	EC	LENGTH	DELTA	RADIUS	TANGENT
C1	P2	P3	67.65	96° 54' 27"	40.00	45.14
C2	P3	P4	38.71	36° 57' 55"	60.00	20.06
C3	P5	P6	75.01	71° 37' 38"	60.00	43.30
C4	P7	P8	19.39	05° 33' 14"	200.00	9.70
C5	P9	P10	22.86	06° 32' 54"	200.00	11.44
C6	P11	P12	28.72	08° 13' 40"	200.00	14.39

NOTES:

1. THE NEW PIPELINE ALIGNMENT SHOWS CENTER OF TRENCH.
2. ASSUMED DEPTH AND APPROXIMATE LOCATION ARE SHOWN. LOCATE BY POTHOLING BEFORE STARTING CONSTRUCTION. COORDINATE WITH PG&E TO RELOCATE INTERFERING UTILITIES AS NECESSARY TO ACCOMMODATE PIPELINE H.
3. TWO POTENTIAL ELEVATIONS ARE SHOWN FOR THE EXISTING 30 INCH GAS PIPELINE. ONE ELEVATION DENOTES A STRAIGHT LINE INTERPOLATION BETWEEN POTHOLE ELEVATION 35' EAST OF NEW PIPELINE CROSSING AND DAYLIGHT ELEVATION OF PIPE 85' WEST OF NEW PIPELINE CROSSING TOP OF PIPE = 567.88' AND BOTTOM OF PIPE = 565.38. THE OTHER ELEVATION ASSUMES THAT GAS PIPELINE IS LEVEL FROM POTHOLE TO PIPELINE CROSSING AND THAT PIPE DESCENDS AFTER PIPELINE CROSSING. TOP OF PIPE = 572.90 BOTTOM OF PIPE = 570.40. CONTRACTOR SHALL POTHOLE AT NEW PIPELINE CROSSING TO DETERMINE EXACT LOCATION.
4. FOR NEW ACCESS ROAD PLAN, PROFILE AND SECTIONS SEE DRAWINGS C-05-01 & C-05-02

0 40 80 120
HORZ: SCALE: 1"=40'

0 10 20 30
VERT: SCALE: 1"=10'

DRAFT
NOT FOR
CONSTRUCTION

E2 Consulting Engineers, Inc.
1900 Powell Street, Ste. 250
Emeryville, CA 94608
(510) 652-1164

CH2MHILL®

NO.	DATE	DESCRIPTION	GM/SPEC	DWN	CHKD	SUPV	APVD BY
3	12/30/14	SUPPLEMENTAL PRE-FINAL (90%) DESIGN		WTH	PT	PT	VMB
2	9/8/14	PRE-FINAL (90%) DESIGN		PH	PT	VMB	VMB
1	4/5/13	INTERMEDIATE (60%) DESIGN		PC	PT	PT	VMB
0	11/18/11	PRELIMINARY (30%) DESIGN		EE	PT	PT	VMB

REVISIONS

APPROVED BY
SO
SUPV VMB
DSGN PT
DWN PC
CHKD VMB
OK VMB
DATE 12/30/14
SCALES

TOPOCK GROUNDWATER REMEDIATION PROJECT
PLAN AND PROFILE
PIPELINE "H"
STA 10+00 TO STA 15+33
GAS TRANSMISSION & DISTRIBUTION
PACIFIC GAS AND ELECTRIC COMPANY
SAN FRANCISCO, CALIFORNIA

MICROFILM
BILL OF MATL
DWG LIST
SUPSDS
SUPSD BY
SHEET NO. of SHEETS
C-07-25
REV 3

C:\CAD\dwg\Topock\90% plans\drawings\REVISED ALIGNMENT\01-15\E2-C-XXX-0725.dwg, 1/2/2015 10:04:31 AM
PLOT DATE: $PLOTDATE PLOT TIME: $PLOTTIME
FILENAME: E2-C-XXX-0725.dwg

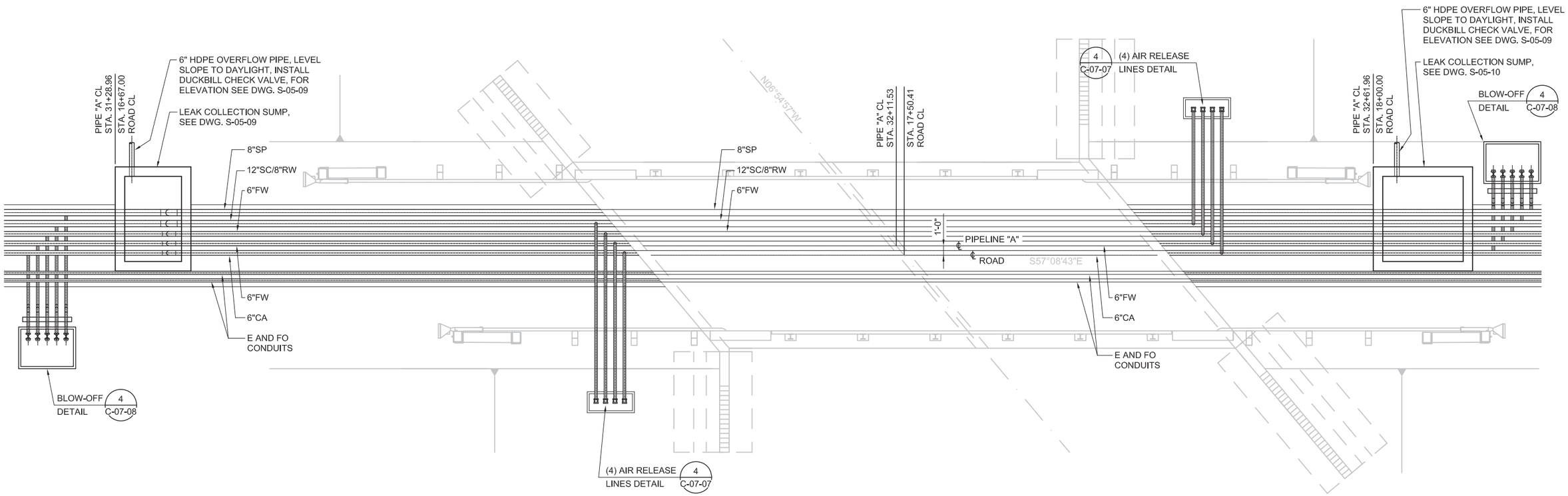

1 DETAIL
3/16" - 1'-0"
C-07-22

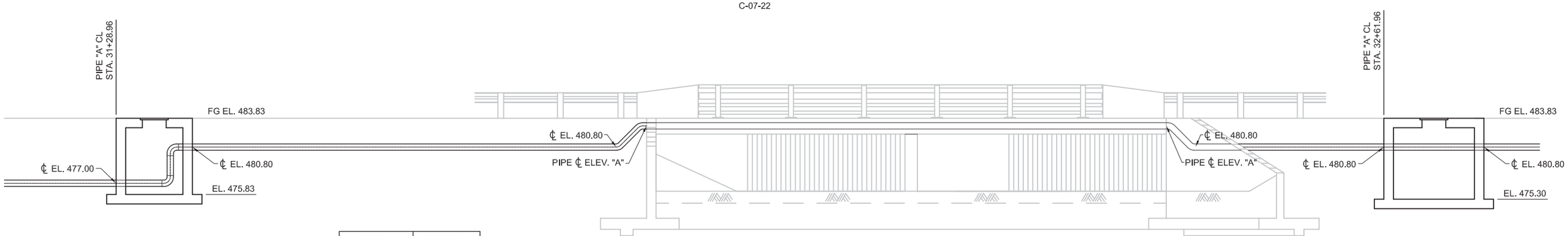

PIPE	ELEV. "A"
8" SP	482.56
8" RW	482.61
6" FW	482.66
6" FW	482.71
6" CA	482.76

A SECTION
3/16" - 1'-0"

4' 0' 4' 8'
SCALE: 3/16" = 1'-0"

DRAFT
NOT FOR
CONSTRUCTION

E2 Consulting Engineers, Inc.
1900 Powell Street, Ste. 250
Emeryville, CA 94608
(510) 652-1164

CH2MHILL®

NO.	DATE	DESCRIPTION	GM/SPEC	DWN	CHKD	SUPV	APVD BY
0	12/30/14	SUPPLEMENTAL PRE-FINAL (90%) DESIGN		WTH	PT	PT	VMB

REVISIONS

APPROVED BY
SO
SUPV
DSGN PT
DWN WTH
CHKD
OK
DATE 12/30/14
SCALES 3/16" = 1'-0"

TOPOCK GROUNDWATER REMEDIATION PROJECT
BAT CAVE WASH
CROSSING
PIPING PLAN AND SECTION
GAS TRANSMISSION & DISTRIBUTION
PACIFIC GAS AND ELECTRIC COMPANY
SAN FRANCISCO, CALIFORNIA

MICROFILM
BILL OF MATL
DWG LIST
SUPSDS
SUPSD BY
SHEET NO. of SHEETS
C-07-38
REV 0

FILENAME: E2-C-XXX-0738
PLOT DATE: $PLOTDATE PLOT TIME: $PLOTTIME

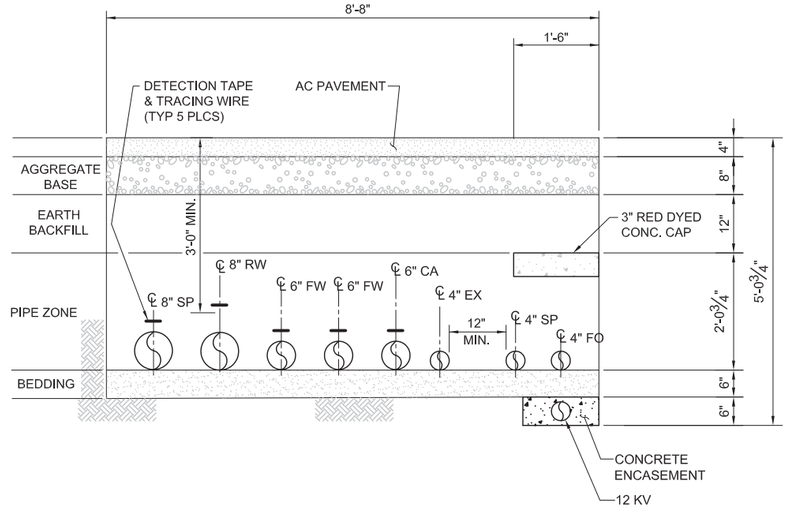

PIPELINE SECTION A11

A11 SECTION (PAVED ROAD)

3/4" = 1'-0"

C-07-24

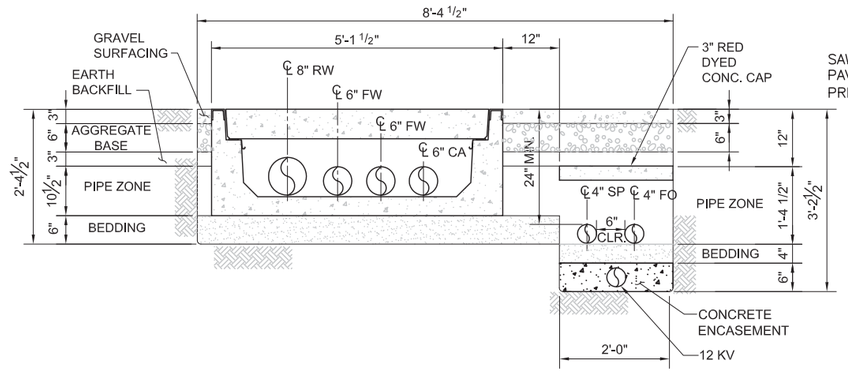

PIPELINE SECTION A7

A7 SECTION

3/4" = 1'-0"

C-07-22
C-07-23

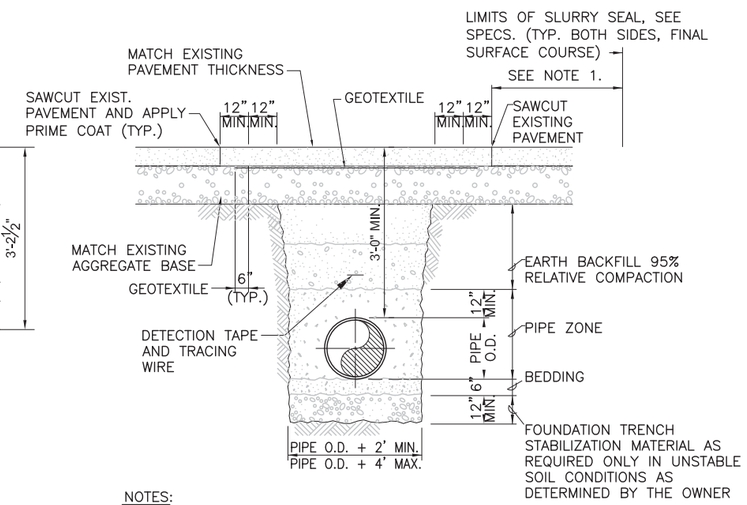

NOTES:

1. ABOVE MIN. APPLIES TO TRENCH TRANSVERSE TO STREET.

B4 SECTION (IN PAVEMENT)

3/4" = 1'-0"

C-07-30
C-07-31

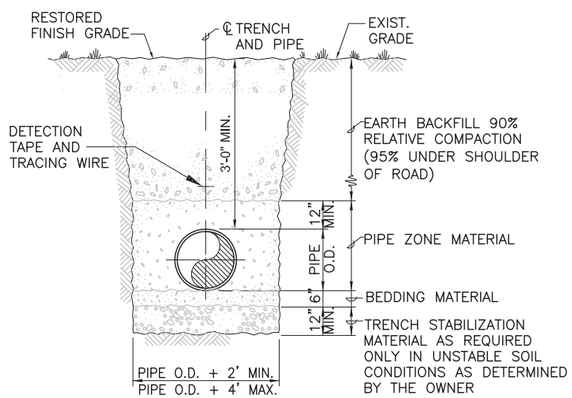

NOTES:

1. IN NON-ROAD AREAS, RESTORE TO MATCH ORIGINAL CONDITION. RESEEDING IS NOT A REQUIREMENT.

SECTION (ROAD SHOULDER OR OPEN FIELD)

B4

3/4" = 1'-0"

C-07-30
C-07-31
C-07-32
C-07-33
C-07-34
C-07-35
C-07-36
C-07-37

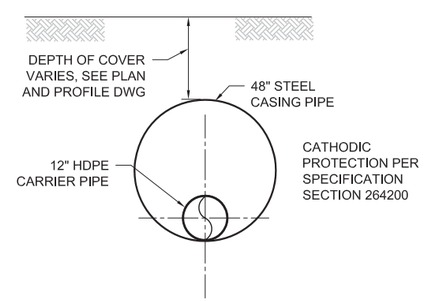

B5 SECTION

3/4" = 1'-0"

C-07-30

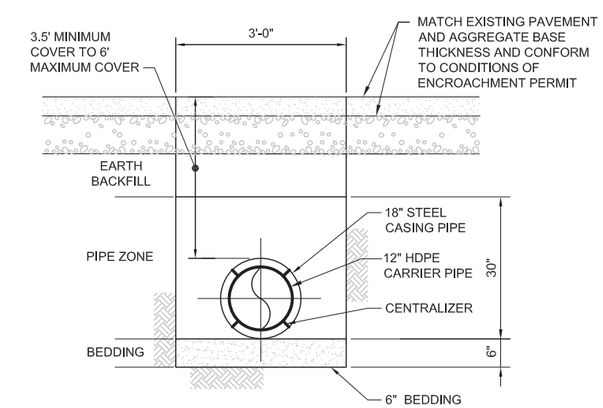

B6 SECTION

3/4" = 1'-0"

C-07-30

NOTE:

1. REFER TO C-07-03 FOR LOCATION OF EACH PIPELINE SECTION.

DRAFT NOT FOR CONSTRUCTION

E2 Consulting Engineers, Inc.
1900 Powell Street, Ste. 250
Emeryville, CA 94608
(510) 652-1164

CH2MHILL®

NO.	DATE	DESCRIPTION	GM/SPEC	DWN	CHKD	SUPV	APVD BY
2	12/30/14	SUPPLEMENTAL PRE-FINAL (90%) DESIGN		MD	PT	VMB	VMB
1	9/8/14	PRE-FINAL (90%) DESIGN		PH	PT	VMB	VMB
0	4/5/13	INTERMEDIATE (60%) DESIGN		PC	PT	VMB	VMB

REVISIONS

APPROVED BY

SO
SUPV VMB
DSGN PT
DWN PC
CHKD VMB
OK VMB
DATE 12/30/14
SCALES 3/4"=1'-0"

TOPOCK GROUNDWATER REMEDIATION PROJECT

TRENCH SECTIONS

GAS TRANSMISSION & DISTRIBUTION
PACIFIC GAS AND ELECTRIC COMPANY
SAN FRANCISCO, CALIFORNIA

MICROFILM
BILL OF MATL
DWG LIST
SUPSDS
SUPSD BY
SHEET NO. of SHEETS
C-07-101
REV 2

FILENAME: E2-C-XXX-07101AD.DWG
PLOT DATE: $PLOTDATE PLOT TIME: $PLOTTIME

N180B

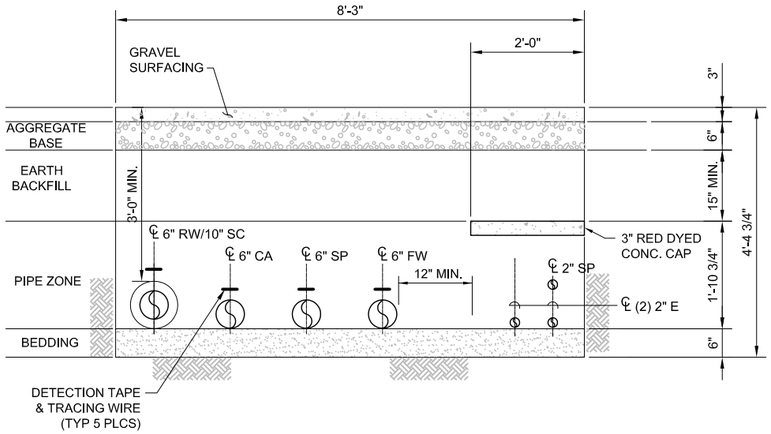

H1 SECTION
3/4" = 1'-0"
C-07-25

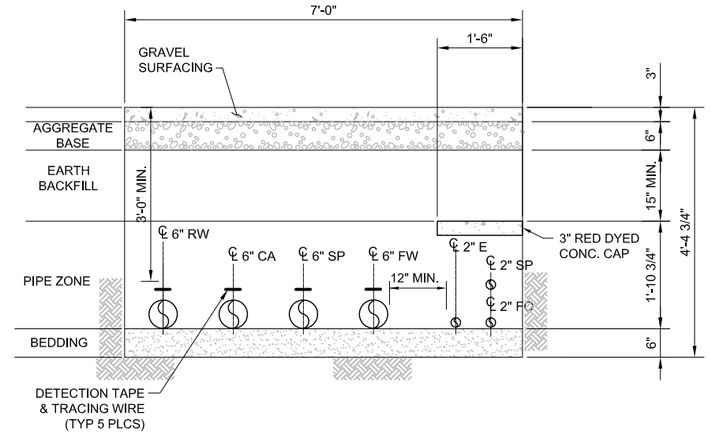

H2 SECTION
3/4" = 1'-0"
C-07-25

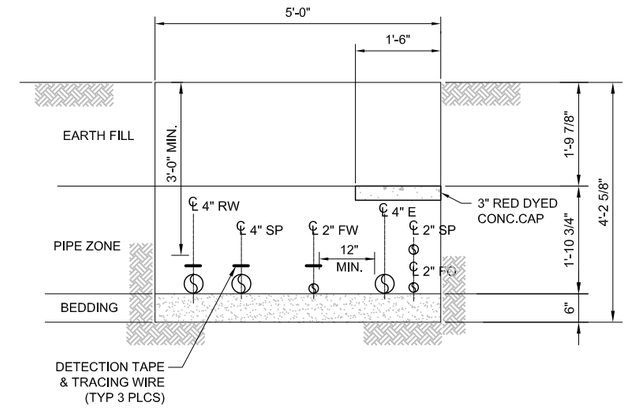

PIPELINE SECTION I1, I3

I1 SECTION (OPEN FIELD)
3/4" = 1'-0"
C-07-79

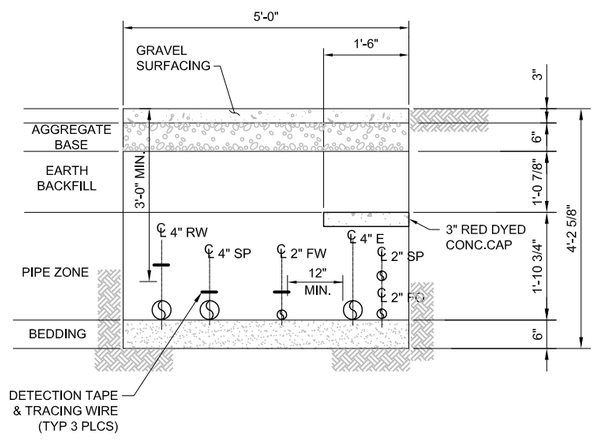

PIPELINE SECTION I1, I3

I1 SECTION (GRAVEL ROAD)
3/4" = 1'-0"
C-07-79

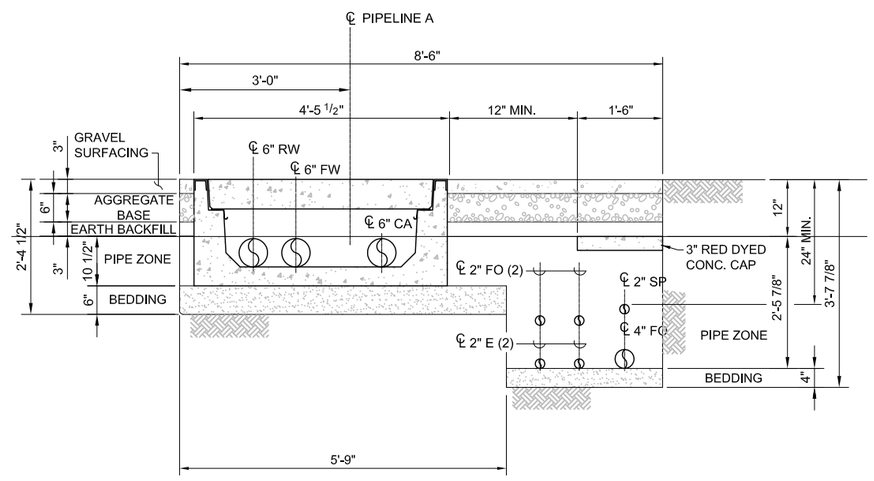

PIPELINE SECTION A8

A8 SECTION
3/4" = 1'-0"
C-07-20
C-07-21

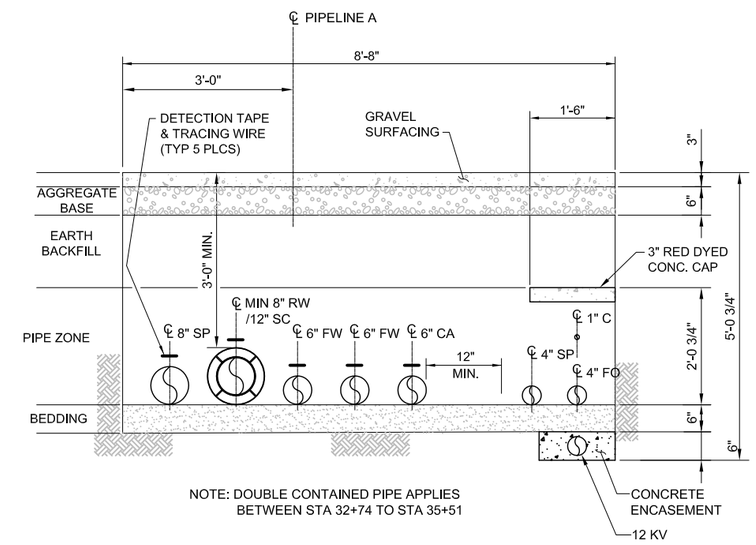

NOTE: DOUBLE CONTAINED PIPE APPLIES BETWEEN STA 32+74 TO STA 35+51

PIPELINE SECTION A10

A10 SECTION
3/4" = 1'-0"
C-07-22
C-07-23

NOTE:

1. REFER TO C-07-03 FOR LOCATION OF EACH PIPELINE SECTION.

DRAFT NOT FOR CONSTRUCTION

E2 Consulting Engineers, Inc.
1900 Powell Street, Ste. 250
Emeryville, CA 94608
(510) 652-1164

CH2MHILL®

NO.	DATE	DESCRIPTION	GM/SPEC	DWN	CHKD	SUPV	APVD BY
2	12/30/14	SUPPLEMENTAL PRE-FINAL (90%) DESIGN		MD	PT	VMB	VMB
1	9/8/14	PRE-FINAL (90%) DESIGN		PH	PT	VMB	VMB
0	4/5/13	INTERMEDIATE (60%) DESIGN		PC	PT	VMB	VMB

REVISIONS

APPROVED BY
SO
SUPV VMB
DSGN PT
DWN PC
CHKD VMB
OK VMB
DATE 12/30/14
SCALES 3/4"=1'-0"

TOPOCK GROUNDWATER REMEDIATION PROJECT

PIPELINE SECTIONS

GAS TRANSMISSION & DISTRIBUTION
PACIFIC GAS AND ELECTRIC COMPANY
SAN FRANCISCO, CALIFORNIA

MICROFILM
BILL OF MATL
DWG LIST
SUPSDS
SUPSD BY
SHEET NO. of SHEETS
C-07-102
REV 2

FILENAME: E2-C-XXX-07102AD.DWG
PLOT DATE: $PLOTDATE PLOT TIME: $PLOTTIME

							REMEDY PIPES									
Pipeline	Profile Sheet	Sta	Utility Owner	Utility Pipe Diameter (in)	Crossing Detail	Minimum Clearance (ft)	FW	RW	CA	TW	ELECT	12 kV ELECT	FIBER OPTIC	DRAIN	SPARE	Trench Section Sheet
A	C-07-21	28+10	Pacific Gas & Electric	4	1	1	2-6	6	6		2	4	4, 2		6, 2	C-07-100
A	C-07-22	31+03	Southwestern Gas	4	1	2	2-6	8	6		1	4	4		8	C-07-100/A6
A	C-07-23	41+40	Pacific Gas & Electric	20 -1	1	1	2-6	8	6			4	4		8, 4	C-07-100
A	C-07-23	44+52	Southwestern Gas	4	1	2	2-6	8	6			4	4		8	C-07-100
A	C-07-23	53+80	Pacific Gas & Electric	20 -1	2	1	2-6	8	8			4	4		8	C-07-102
B	C-07-30	43+XX	Pacific Gas & Electric	30	1	2	12									C-07-101
B	C-07-30	43+XX	Kinder Morgan	30?	1	2	12									C-07-101
B	C-07-30	44+XX	Pacific Gas & Electric	30?	1	2	12									C-07-101
B	C-07-30	48+60	Transwestern Gas	24	1	2	12									C-07-101
B	C-07-31	51+00	Southwestern Water	2	none[1]	1	12									C-07-101
B	C-07-31	51+75	Mojave Electric	?	2	1.5	12									C-07-101
B	C-07-31	52+40	Mojave Electric	?	2	1.5	12									C-07-101
H	C-07-25	15+08	Southwestern Gas	4	1	2	6	6	6		3-2		2		6, 2	C-07-101
H	C-07-25	12+40	Southern California Gas	30	1	2	6	6	6		4		2	4	6, 2	C-07-101
I	C-07-78	12+20	Pacific Gas & Electric	30	1	2	2	4			4		2		4, 2	C-07-102
I	C-07-78	12+55	Pacific Gas & Electric	2	none[1]	1	2	4			4		2		4, 2	C-07-101

1 - Relocate interfering utility

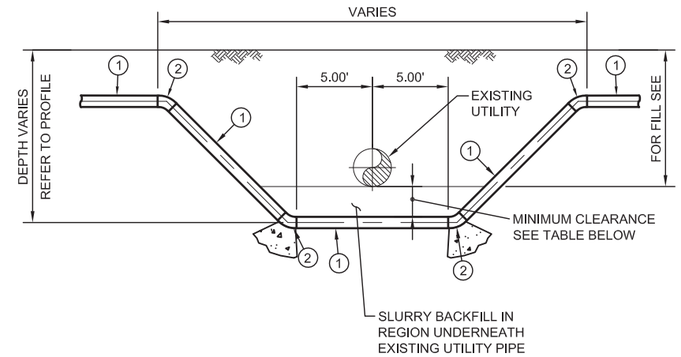

KEY

(1) HDPE SDR 11 (STEEL PIPE SIZE) = PRESSURE RATING = 200 PSI PER AWWA C-906 AND ASTM C-3408.

(2) HDPE BUTT FUSED 45 DEGREE ELBOW PER ANSI/AWWA C-906 AND ASTM C-3408

1 UNDER CROSSING DETAIL

N.T.S.

VARIES, SEE TABLE

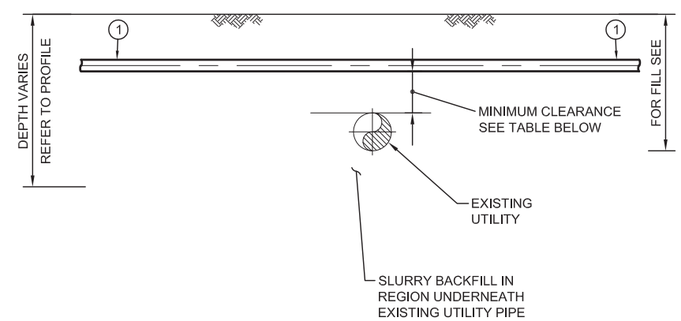

KEY

(1) HDPE SDR 11 (STEEL PIPE SIZE) = PRESSURE RATING = 200 PSI PER AWWA C-906 AND ASTM C-3408.

2 OVER CROSSING DETAIL

N.T.S.

VARIES, SEE TABLE

DRAFT
NOT FOR
CONSTRUCTION

E2 Consulting Engineers, Inc.
1900 Powell Street, Ste. 250
Emeryville, CA 94608
(510) 652-1164

CH2MHILL®

NO.	DATE	DESCRIPTION	GM/SPEC	DWN	CHKD	SUPV	APVD BY
1	12/30/14	SUPPLEMENTAL PRE-FINAL (90%) DESIGN		MD	PT	VMB	VMB
0	9/8/14	PRE-FINAL (90%) DESIGN		PH	VMB	VMB	VMB

REVISIONS

APPROVED BY
SO
SUPV VMB
DSGN PT
DWN WTH
CHKD VMB
OK VMB
DATE 12/30/14
SCALES N.T.S

TOPOCK GROUNDWATER REMEDIATION PROJECT
CROSSING DETAILS

GAS TRANSMISSION & DISTRIBUTION
PACIFIC GAS AND ELECTRIC COMPANY
SAN FRANCISCO, CALIFORNIA

MICROFILM
BILL OF MATL
DWG LIST
SUPSDS
SUPSD BY
SHEET NO. of SHEETS
C-07-126
REV 1

FILENAME: E2-C-XXX-07126.dwg
PLOT DATE: $PLOTDATE PLOT TIME: $PLOTTIME

N1808

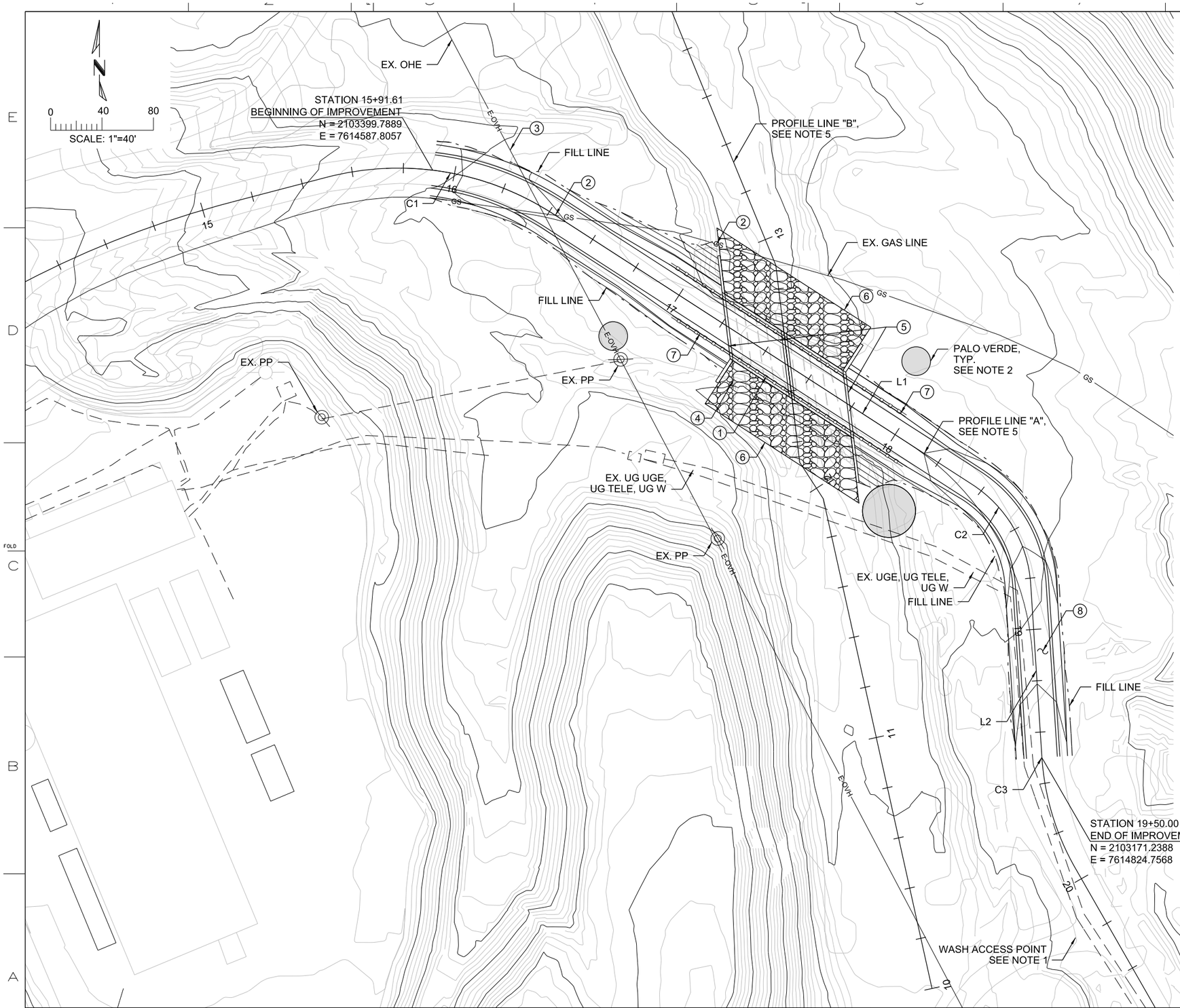

CONSTRUCTION NOTES

1. DO NOT START CONSTRUCTION UNTIL OWNER REMOVES AND TRANSPLANTS PALO VERDE SEEDLING. COORDINATE WITH OWNER FOR DETAILS.
2. COORDINATE WITH UTILITY OWNER TO POTHOLE FOR DEPTH AND LOCATION OF UNDERGROUND GAS PIPE BEFORE STARTING CONSTRUCTION. USE SOFT-DIG METHODS AND POTHOLE LOCATIONS SHOWN.
3. BEFORE STARTING CONSTRUCTION COORDINATE WITH UTILITY OWNER TO PROVIDE HIGH-VISIBILITY MARKERS ON OVERHEAD POWER LINE WHERE IT CROSSES ROAD. MAINTAIN APPROPRIATE SAFE DISTANCE FROM LINE.
4. DEMOLISH CORRUGATED METAL PIPES AND OVERLYING ROAD.
5. PROVIDE TWO 20' X 6' RCBS AND ASSOCIATE WINGWALLS PER DRAWING S-07-01. STAIN PER NOTE 4.
6. INSTALL CLASS 8 RSP FABRIC AND CLASS 3 FACING ROCK SLOPE PROTECTION PER CALTRANS STANDARD SPECIFICATIONS SECTION 72-2. STAIN PER NOTE 4.
7. PROVIDE GUARD RAIL AS SHOWN ON STRUCTURAL DRAWINGS PER DRAWING S-07-01. STAIN PER NOTE 4.
8. PROVIDE 12' WIDE ROAD WITH 1' SHOULDERS TO TRANSITION EXISTING ROAD ONTO BOTH ENDS OF RCB. COORDINATE WITH PIPELINE CONSTRUCTION. PROVIDE GRAVEL ROAD SURFACE ON ROADS AS SHOWN ON RELATED PIPELINE DRAWINGS.

NOTES

1. ENTER AND EXIT WASH ONLY AT LOCATION SHOWN AND TRAVEL DIRECTLY TO PROJECT LIMITS. PRESERVE AND PROTECT GROUND SURFACE, SLOPES, AND VEGETATION OUTSIDE OF FILL LINE AND PROJECT LIMITS. DO NOT OPERATE EQUIPMENT OR VEHICLES OUTSIDE OF FILL LINE AND PROJECT LIMITS. DO NOT DISTURB AREA NORTH PROJECT LIMITS.
2. PROTECT AND PRESERVE EXISTING PALO VERDES TREES AND EXISTING PROTECTIVE FENCING. DO NOT PLACE FILL OR OTHER MATERIAL WITHIN DRIP LINE OF TREES.
3. SURVEY AS-BUILT CONDITIONS AND PROVIDE SURVEYOR-STAMPED MAP AND ASSOCIATED CAD FILE.
4. STAIN ALL EXPOSED CONCRETE , STEEL AND RIPRAPWITH A NATURAL DESERT COLOR THAT MATCHES THE SURROUNDING AREA. REFER TO DWG S-07-01 FOR STAINING BELOW FINISH GRADE. PROVIDE STAINS MANUFACTURER'S RECOMMENDATIONS. IN COORDINATION WITH OWNER, PROVIDE TEST PLOT SAMPLES TO FACILIATE COLOR SELECTION. COLOR WILL BE SELECTED SOLELY BY OWNER. SUBMIT MANUFACTURER'S PRODUCT INFORMATION AND INSTALLATION RECOMMENDATIONS.
5. SEE DRAWING C-07-130 FOR PROFILE VIEWS.

WASH CROSSING EARTHWORK

EXISTING GROUND SURFACE VS ROADWAY DESIGN SURFACE
EXPANSION/SHRINKAGE FACTOR: 1.0

CUT: 206 BANK CUBIC YARDS
FILL: 267 COMPACTED CUBIC YARDS
NET: 61 CUBIC YARDS OF FILL

VOLUMES SHOWN ARE APPROXIMATE AND PROVIDED FOR INFORMATIONAL PURPOSES ONLY. CHECK VOLUMES BEFORE USE IN ESTIMATING OR CONSTRUCTION.

CURVE TABLE

No.	Delta	Radius (ft)	Length (ft)	Tangent (ft)
C1	25°55'45"	110.63	50.06	25.47
C2	53°26'36"	50.00	46.64	25.17
C3	00°09'20"	100.00	0.27	0.14

LINE TABLE

No.	Direction	Length (ft)
L1	S57°08'43"E	194.20
L2	S03°42'07"E	67.40

DRAFT
NOT FOR
CONSTRUCTION

CH2MHILL®

NO.	DATE	DESCRIPTION	GM/SPEC	DWN	CHKD	SUPV	APVD BY
1	12/05/14	SUPPLEMENTAL PRE-FINAL DESIGN (90%)		SB	MS	CH	NB

REVISIONS

APPROVED BY		
	SO	
	SUPV	NB
	DSGN	SB
	DWN	SB
	CHKD	MS
	OK	
	DATE	9/08/14
	SCALES	

TOPOCK GROUNDWATER REMEDIATION PROJECT
BAT CAVE WASH
CROSSING SITE PLAN

GAS TRANSMISSION & DISTRIBUTION
PACIFIC GAS AND ELECTRIC COMPANY
SAN FRANCISCO, CALIFORNIA

MICROFILM	
BILL OF MATL	
DWG LIST	
SUPSDS	
SUPSD BY	
SHEET NO. 1 OF 1	SHEETS
C-07-129	REV 2

FILENAME: PG&E Border.dgn
PLOT DATE: 2015\01\14 PLOT TIME: 3:23:42 PM
N1808

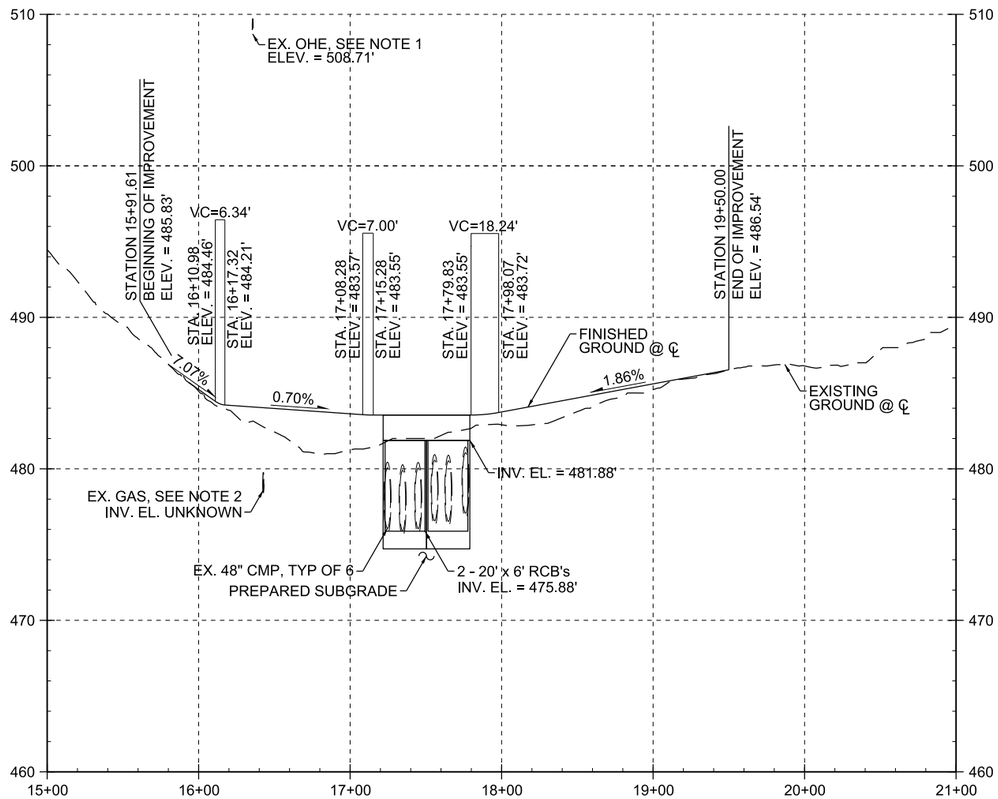

PROFILE "A" LOOKING NORTH

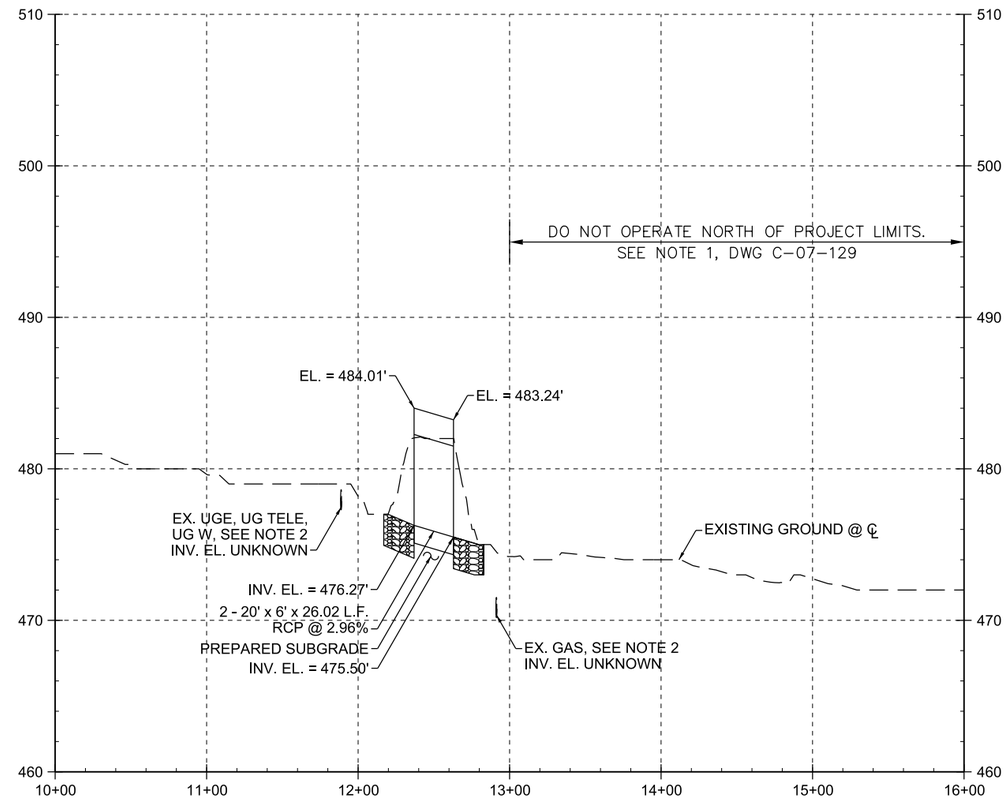

PROFILE "B" LOOKING WEST

SCALE

HORIZONTAL: 1" = 100'
VERTICAL: 1" = 10'

NOTES

1. MAINTAIN APPROPRIATE SAFE DISTANCE FROM OVERHEAD POWER LINE. ELEVATION SHOWN IS BASED ON A GROUND SURVEY CONDUCTED BY CALVADA AND DATED 10/08/14. ELEVATION OR LOCATION AT TIME OF CONSTRUCTION MAY DIFFER.

2. PRESERVE AND PROTECT ALL EXISTING UTILITIES. LOCATE GAS PIPELINE AS SHOWN ON DWG C-07-129.

DRAFT
NOT FOR
CONSTRUCTION

CH2MHILL®

NO.	DATE	DESCRIPTION	GM/SPEC	DWN	CHKD	SUPV	APVD BY
1	12/05/14	SUPPLEMENTAL PRE-FINAL DESIGN (90%)		SB	MS	CH	NB

REVISIONS

APPROVED BY
SO
SUPV NB
DSGN SB
DWN SB
CHKD MS
OK
DATE
SCALES

TOPOCK GROUNDWATER REMEDIATION PROJECT

BAT CAVE WASH
PROFILES

GAS TRANSMISSION & DISTRIBUTION
PACIFIC GAS AND ELECTRIC COMPANY
SAN FRANCISCO, CALIFORNIA

MICROFILM
BILL OF MATL
DWG LIST
SUPSDS
SUPSD BY
SHEET NO. 1 OF 1 SHEETS
C-07-130 REV

PLOT DATE: 2015/01\14 PLOT TIME: 3:35:48 PM
FILENAME: PG&E Border.dgn

N1808

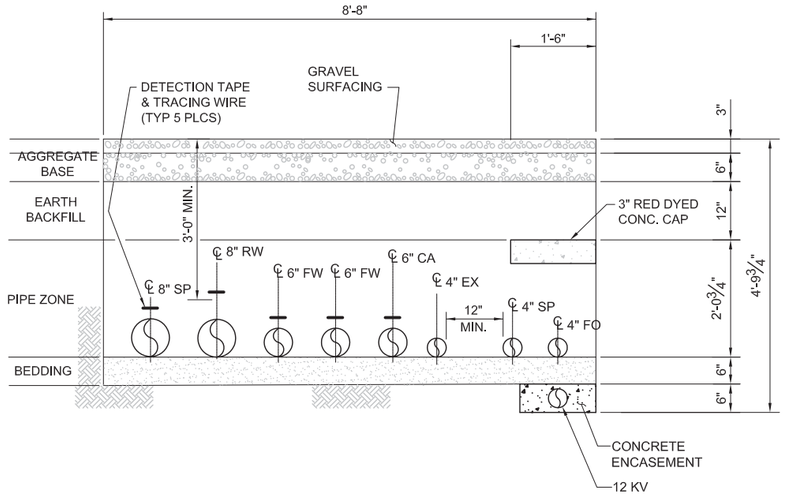

PIPELINE SECTION A11

A11 SECTION (GRAVEL ROAD)

3/4" = 1'-0"

C-07-24

NOTE:

1. REFER TO C-07-03 FOR LOCATION OF EACH PIPELINE SECTION.

DRAFT
NOT FOR
CONSTRUCTION

E2 Consulting Engineers, Inc.
1900 Powell Street, Ste. 250
Emeryville, CA 94608
(510) 652-1164

CH2MHILL®

NO.	DATE	DESCRIPTION	GM/SPEC	DWN	CHKD	SUPV	APVD BY
2	12/30/14	SUPPLEMENTAL PRE-FINAL (90%) DESIGN		MD	PT	VMB	VMB
1	9/8/14	PRE-FINAL (90%) DESIGN		PH	PT	VMB	VMB
0	4/5/13	INTERMEDIATE (60%) DESIGN		PC	PT	VMB	VMB

REVISIONS

APPROVED BY

SO	
SUPV	VMB
DSGN	PT
DWN	PC
CHKD	VMB
OK	VMB
DATE	12/30/14
SCALES	3/4"=1'-0"

TOPOCK GROUNDWATER REMEDIATION PROJECT

TRENCH SECTIONS

GAS TRANSMISSION & DISTRIBUTION
PACIFIC GAS AND ELECTRIC COMPANY
SAN FRANCISCO, CALIFORNIA

MICROFILM
BILL OF MATL
DWG LIST
SUPSDS
SUPSD BY
SHEET NO. of SHEETS
C-07-131
REV 2

FILENAME: E2-C-XXX-07101AD.DWG
PLOT DATE: $PLOTDATE PLOT TIME: $PLOTTIME

N1808

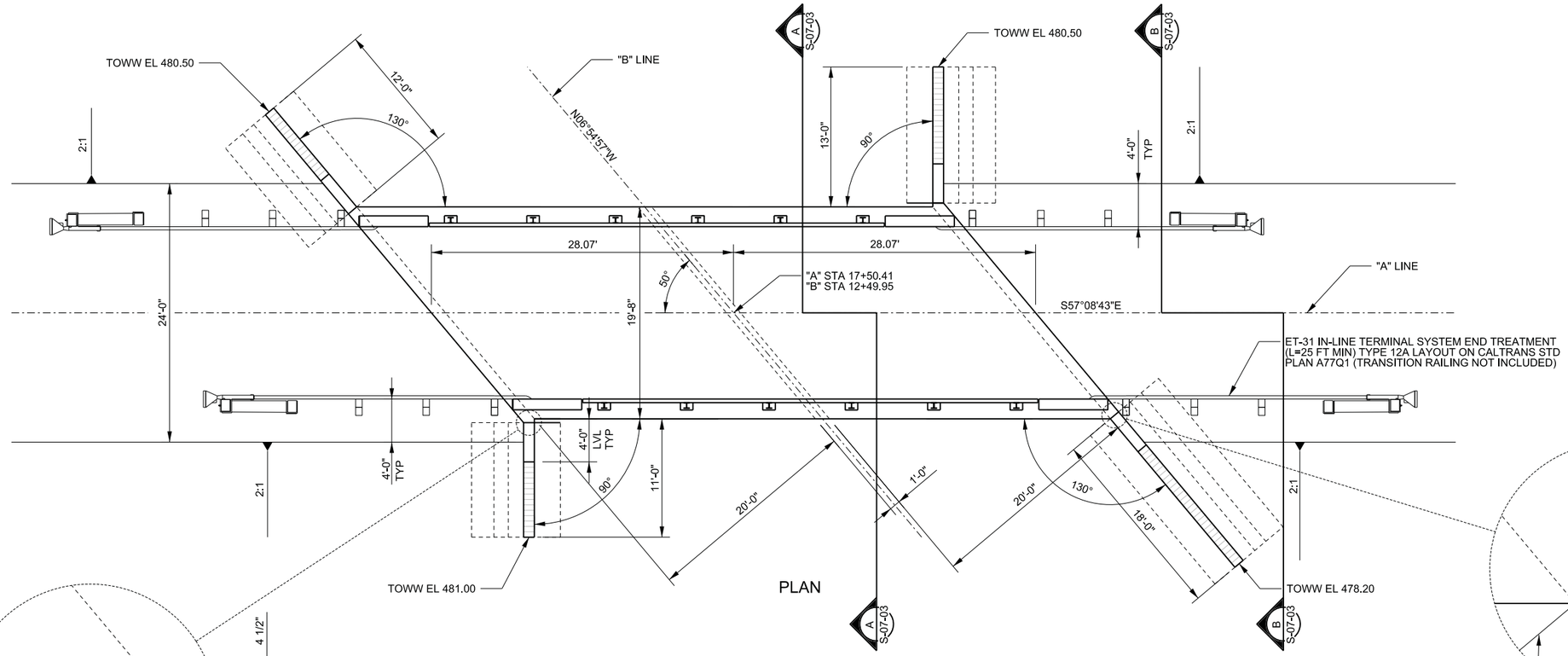

PLAN

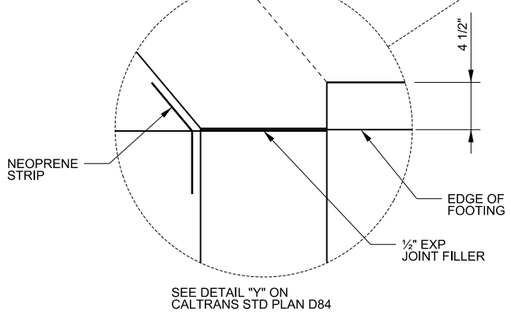

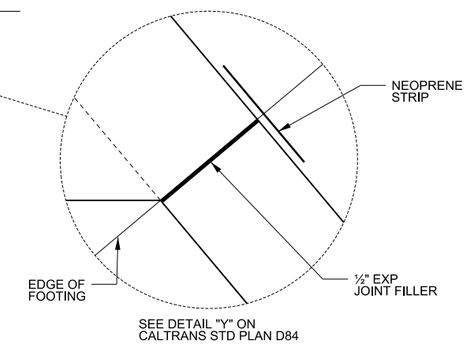

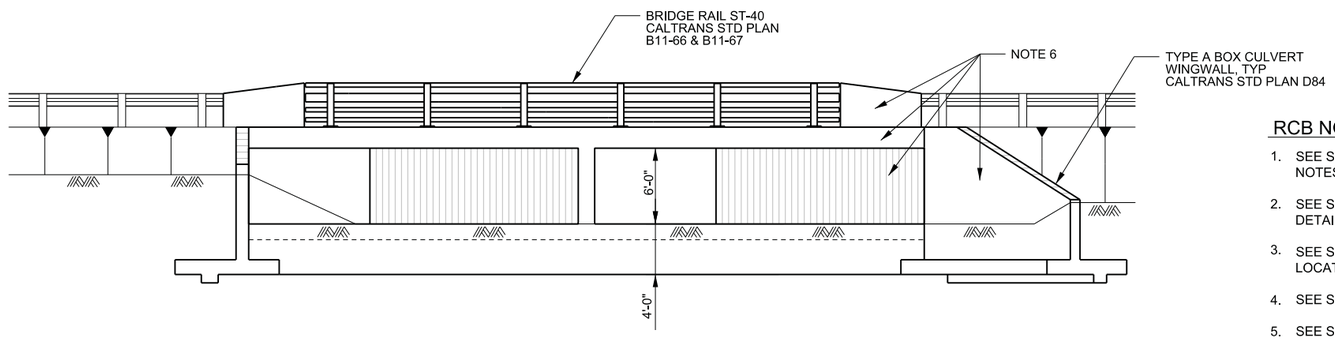

ELEVATION

RCB NOTES:

1. SEE SHEET S-07-02 FOR DESIGN AND GENERAL NOTES AND RCB DETAILS.
2. SEE SHEET C-07-129 FOR GRADING AND RIPRAP DETAILS.
3. SEE SHEET C-07-129 FOR EXISTING UTILITY LOCATIONS.
4. SEE SHEET C-07-130 FOR "A" AND "B" PROFILES.
5. SEE SHEET S-07-03 SECTION A (RCB SECTION) FOR THE NEW UTILITIES AND LOCATIONS TO BE CAST INTO TOP SLAB OF THE RCB.
6. APPLY CONCRETE STAIN TO ALL EXPOSED CONCRETE SURFACES OF THE REINFORCED CONCRETE BOX CULVERT, CONCRETE WINGWALLS (STAIN TO 1'-0" BELOW FINISHED GRADE) AND CONCRETE RAIL PEDESTALS EXCEPT FOR THE RIDING SURFACE, CEILING AND INVERT SLAB OF THE REINFORCED CONCRETE BOX CULVERT. REFER TO DWG C-07-129 FOR STAINING DETAILS.

DRAFT
NOT FOR
CONSTRUCTION

CH2MHILL®

NO.	DATE	DESCRIPTION	GM/SPEC	DWN	CHKD	SUPV	APVD BY
0	12/30/14	SUPPLEMENTAL PRE-FINAL DESIGN (90%)		TV	MS	CH	NB

REVISIONS

APPROVED BY

SO	
SUPV	CH
DSGN	TV
DWN	TV
CHKD	MS
OK	
DATE	6/30/14
SCALES	NTS

TOPOCK GROUNDWATER REMEDIATION PROJECT
CAST-IN-PLACE
REINFORCED CONCRETE
DOUBLE BOX CULVERT
GAS TRANSMISSION & DISTRIBUTION
PACIFIC GAS AND ELECTRIC COMPANY
SAN FRANCISCO, CALIFORNIA

MICROFILM
BILL OF MATL
DWG LIST
SUPSDS
SUPSD BY
SHEET NO. X OF X SHEETS
S-07-01
REV 0

PLOT DATE: 2015\01\14 PLOT TIME: 3:58:04 PM
FILENAME: PG&E_Border.dgn
FILENAME: ___DGN __-__-04 ___
N1808

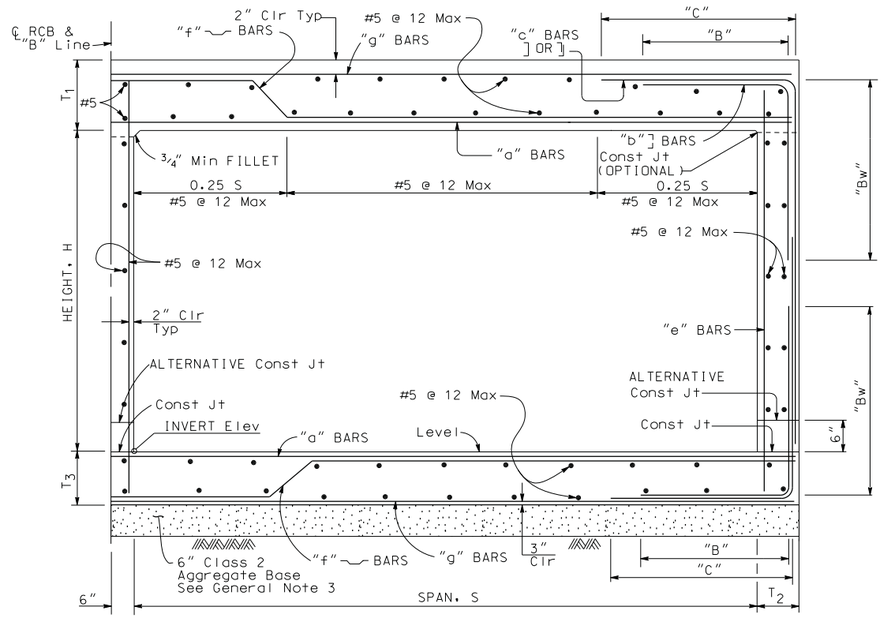

TYPICAL SECTION

NTS

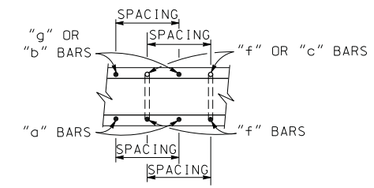

ROOF SECTION

NTS (INVERT SIMILAR)

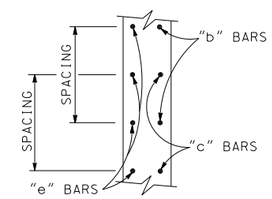

EXTERIOR WALL SECTION

NTS

SPAN, S			20'
HEIGHT, H			6'
MAXIMUM EARTH COVER			0'
Conc	ROOF	T_1	20"
	WALLS	T_2	12"
	INVERT	T_3	15"
Reinf	SPACING		12"
	"g"	SIZE BAR	#7
	"f"	SIZE BAR	#7
	"a"	SIZE BAR	#7
	"b"	SIZE BAR	#7
		Dim "B" ft-inch	8-0
		Dim "Bw" ft-inch	6-6
	"c"	SIZE BAR	#7
		Dim "C" ft-inch	14-0
	"e"	SIZE BAR	#5
QUAN-TITIES	CONCRETE	CF/LF	144
	REINFORCEMENT	LB/LF	1040
* SOIL PRESSURE (ksf)			2.0

* See Design Note 7

GENERAL NOTES:

1. Quantities are approximate and for design purposes only.
2. For wingwall and cutoff wall details and notes not shown, see CALTRANS Standard Plan D84.
3. 6-inches of Class 2 Aggregate Base to be placed under the RCB and wingwall footings.

DESIGN NOTES:

1. Design Specifications: AASHTO LRFD Bridge Design Specifications, 4th Edition with California Amendments.
2. Loading: Live Load consists of an HL-93 design truck or tandem and a design lane load.
3. Earth Load: Earth pressure for two conditions.
   140 pcf vertical with 42 pcf horizontal
   140 pcf vertical with 140 pcf horizontal
4. Concrete: Concrete shall have a minimum compressive strength of 4,000 psi at 28 days. The cementitious material to be used in the concrete shall be Type V.
5. Reinforcing Steel: Reinforcement shall be grade 60.
6. See 2010 CALTRANS Standard Specifications Section 83 for materials and construction of the bridge railing and terminal system end treatment.
7. Soil pressures shown are factored per AASHTO LRFD and includes self weight of box and live load where applicable.

DRAFT
NOT FOR
CONSTRUCTION

CH2MHILL®

NO.	DATE	DESCRIPTION	GM/SPEC	DWN	CHKD	SUPV	APVD BY
0	12/30/14	SUPPLEMENTAL PRE-FINAL DESIGN (90%)		TV	MS	CH	NB

REVISIONS

APPROVED BY

SO	
SUPV	CH
DSGN	TV
DWN	TV
CHKD	MS
OK	
DATE	6/30/14
SCALES	NTS

TOPOCK GROUNDWATER REMEDIATION PROJECT
CAST-IN-PLACE
REINFORCED CONCRETE
DOUBLE BOX CULVERT
GAS TRANSMISSION & DISTRIBUTION
PACIFIC GAS AND ELECTRIC COMPANY
SAN FRANCISCO, CALIFORNIA

MICROFILM
BILL OF MATL
DWG LIST
SUPSDS
SUPSD BY
SHEET NO. X OF X SHEETS
S-07-02
REV 0

FILENAME: PG&E_Border.dgn
PLOT DATE: 2015\01\09 PLOT TIME: 12:44:57 PM
FILENAME: ____DGN __-__-04 ____
N1808

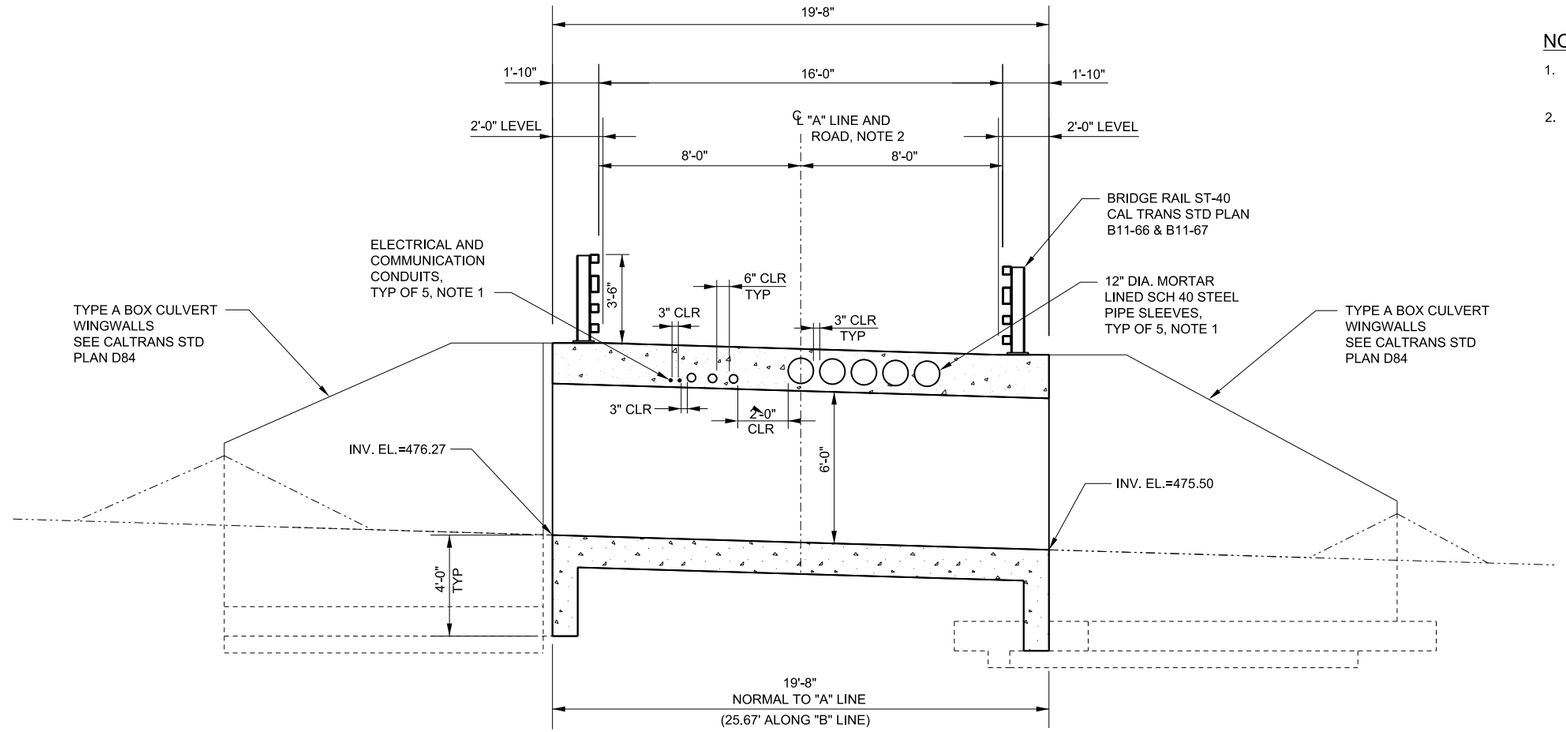

A RCB SECTION
NTS
S-07-01

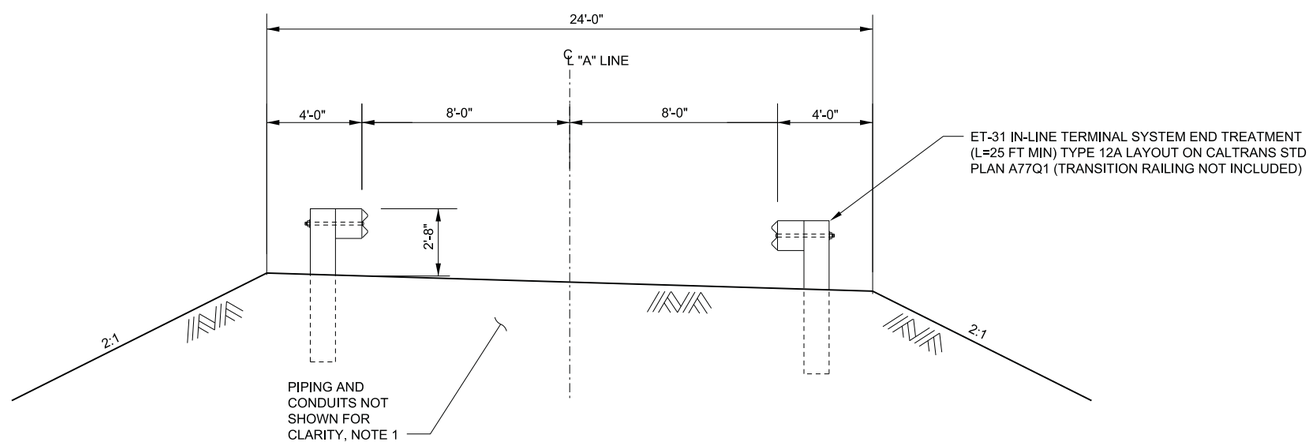

B SECTION - APPROACH ROADWAYS
NTS
S-07-01

NOTES:

1. SEE DWG C-07-38 FOR PIPE AND CONDUIT INFORMATION.
2. THE CL OF "A" LINE AND THE ROAD ARE THE SAME. THE CL OF "PIPELINE A" IS DIFFERENT AND SHOWN ON C-07-38.

DRAFT
NOT FOR
CONSTRUCTION

CH2MHILL®

NO.	DATE	DESCRIPTION	GM/SPEC	DWN	CHKD	SUPV	APVD BY
0	12/30/14	SUPPLEMENTAL PRE-FINAL DESIGN (90%)		TV	MS	CH	NB

REVISIONS

APPROVED BY		
SO		
SUPV	CH	
DSGN	TV	
DWN	TV	
CHKD	MS	
OK		
DATE	6/30/14	
SCALES	NTS	

TOPOCK GROUNDWATER REMEDIATION PROJECT
CAST-IN-PLACE
REINFORCED CONCRETE
DOUBLE BOX CULVERT
GAS TRANSMISSION & DISTRIBUTION
PACIFIC GAS AND ELECTRIC COMPANY
SAN FRANCISCO, CALIFORNIA

MICROFILM
BILL OF MATL
DWG LIST
SUPSDS
SUPSD BY
SHEET NO. X OF X SHEETS
S-07-03 REV 0

PLOT DATE: 2015/01/09 PLOT TIME: 12:48:16 PM
FILENAME: PG&E_Border.dgn
FILENAME: ___DGN __-__-04 ____
N1808

DESCRIPTION OF WORK

Improve control of Pond evaporation by bringing power to the ponds and having the ability to transfer and re-circulate water. L300B will be tapped to provide power for a natural gas Reciprocating Internal Combustion Engine (RICE) and Thermal Electric Generator. Liquid level monitors shall be added to the ponds. Security cameras and lights for observation from the Topock Control Room. Valve actuator shall be added to improve control of discharge automatically. Two (2) pontoon pumps will have the ability to increase evaporation by spreading the water over the western pond slopes.

GENERAL NOTES

Site Location shall be the North of Topock Compressor Station, 145453 National Trails Hwy, Needles Ca. 92363 at the Ponds located approximately 1 mile north. Vicinity and site location are provided on this sheet.

Notify Underground Service Alert (USA) or "Dig Alert". Hand Dig Policy Utility Work Procedure WP4412-05 outlines the procedure to follow for excavation at the Station.

The new building, associated equipment, and containment will be designed to applicable PG&E and industry standards, including but not limited to:

a. 2013 California Building Code and be considered Risk Category IV, for non-building structures.
b. Minimum Design Loads for Buildings and Other Structures. American Society of Civil Engineers (ASCE-7), 2010 edition.
c. Institute for Electrical and Electronic Engineers (IEEE) C2; National Electrical Safety Code MG 1, National Electrical Manufacturers Association (NEMA)
d. National Fire Protection Association 10, Standard for Portable Fire Extinguishers
e. NFPA 70E; Standard for Electrical Safety in the Workplace
f. California Mechanical Code, 2010 or latest adopted edition
g. California Plumbing Code, 2010 or latest adopted edition
h. U.S. Occupational Safety and Health Administration Rulemakings
i. California Health and Safety Code (H&SC) (Sections 25270-25270.13).
j. Seismic Loads Shall meet or exceed CBC and as amended by San Bernardino County and/or ASCE 7-10 Minimum Design Loads for Buildings and Other Structures.
k. Winds Loads Shall meet or exceed CBC and as amended by San Bernardino County and/or ASCE 7-10 Minimum Design Loads for Buildings and Other Structures.

USA Clearance: All excavation shall be first surveyed and cleared by Underground Service Alert (USA). PG&E requires notification and clearance by USA for all digs.

Hot Work Permit: Each day welding or hot work is to be performed a PG&E hot work permit is required. A PG&E employee will use gas detectors to determine the area is safe for welding with one person to remain on site on fire watch with appropriate fire control equipment during welding activities and 30 minutes after all welding is completed. Planning when hot work will take place is important and requires advanced notice of at least two days.

CONCRETE SPECIFICATIONS

a. Cement shall be clean, fresh, Type II, low alkali, Portland cement conforming to ASTM C150. With strength of poured-in-place concrete shall be a minimum of 3,000 psi at 28 days, or as specified by drawings.
b. Aggregate shall be non-reactive. Cement content shall be a minimum of 4 sacks per cubic yard of concrete. Slump of concrete shall be as low as practicable to produce a dense, well consolidated concrete and not exceed 4" unless otherwise authorized by PG&E Project Engineer.
c. Finish of formed surfaces shall be smooth and free of fins, honeycomb, or segregation. Proper curing compound conforming to ASTM C309 may be used in-lieu of wetting surfaces. Curing agent shall be W.R. Meadows 1100 Clear Series or equal. Forms to remain in place five or more days to minimize cracks.
d. Reinforcing steel shall be deformed, Grade 60, conforming to ASTM A615, and be free from coating, which will reduce the bond. Reinforcing steel shall be sized in accordance with the ultimate strength method. Reinforcing steel splices shall be 40 bar diameters. Cover shall be specified in drawings.

STEEL SPECIFICATIONS

A. CODES
AISC Manual of Steel Construction - 14th Edition CBC Building Code 2013

B. STRUCTURAL STEEL
a. CONNECTIONS
i. Shop connections shall be welded unless shown or otherwise noted.
ii. ¾" A307 bolts shall be used for field connections, except where details or notes specify otherwise.
iii. Field welding shall be used only as indicated on the drawings or as described in the other sections of these notes and the specifications.
iv. Galvanized American Standard Machine bolts with hexagon heads and nuts shall be used for field connections or shop connections where noted on individual drawings, details, or the specifications.
b. COATINGS
i. Hot dipped galvanized all steel components
c. MATERIAL
i. Hot rolled structural shapes: ASTM A992/ A992M
ii. Structural Tubing: ASTM A500
iii. Pipe: ASTM A53/ A53M GR. B
iv. Plates: ASTM A36/ A36M
v. Welding electrode: AWS A5.1 (E70XX)

C. WELDING
a. Welding Procedure Specifications (WPS)
i. Groove welding procedure shall be in accordance with AWS D1.1-08 Code and also specification.
ii. Prequalified groove welded joints shall conform to AWS D1.1-08 Code, Section 3 and also specification.
iii. Other than prequalified groove joints shall be tested and qualified in accordance with AWS D1.1-08 Code, Section 4.
iv. Welders and welding operators that use prequalified WPS shall be qualified in conformance with AWS Code Section 4, Part C.
b. Start welding at the most central beam and progress towards the exterior columns. One end of each beam shall be allowed to cool before the other end is welded. Bolted web connectors shall be tensioned at least 24 hours after the welding of flanges shear tabs shall be welded (if required) after tab bolts are tensioned.
c. The following AWS D1.1-08 Sections shall be given special attention:
i. Section 4, Part C for qualified welders
ii. Section 3.5 for preheat and interpass temperature requirements
iii. Section 6 for inspection
d. Welder shall be qualified as an AWS certified welder
e. Back-up bars, run-off tabs, welding electrode, bead size and thickness, method of testing, etc. shall conform to AWS D1.1-08
f. Electrode diameter, type and toughness shall conform to FEMA Guidelines and AWS Code
g. All applicable AWS D1.1-08 Code Sections 3.7, 3.8, 3.9, 3.10, 3.11, 3.12, 3.13 on WPS requirements shall be followed using E 70XX electrode
h. Field Welding (not apply)
i. All welding shall be performed by flux corded arc. (ACAW)
ii. Welding and welding procedures shall be in accordance with AWS D1.1-08
iii. Procedures other than those prequalified shall be qualified by test as specified in Section 4 of AWS D1.1-08
iv. Welding shall be performed only by welders who have been qualified in accordance with Section 4, Part C of AWS D1.1-08

GEOTECHNICAL

The following criteria will be used as a basis of design for remediation facilities.

a. Unit soil weight = 120 lbs/cu ft. with friction angle varies from 32 to 35 degrees.
b. Shallow foundations for buildings with support extending 2 feet below grade. Slabs and footings set on 6" layer of granular base leveling course.
c. Allowable bearing capacity = 2,000 lbs/sq ft. Allowable settlement = 1 inch
d. Temporary cut and fill slopes to be 2H:1V
e. Pipe design based on depth of fill, weight of fill, compaction of fill and modulus of soil reaction (E' = 1,000 psi).
f. Native onsite materials may be considered for backfill if they have an expansion index (EI) less than 50 and contain less than 8 percent fines as determined by ASTM D4829 and D422.
g. Utility trenches shall be excavated a minimum of three inches deeper than the bottom of installed pipe or conduits. All lines shall have a minimum cover of six inches of compacted sand and a minimal burial depth of 18 inches unless otherwise noted.
h. Trenches shall be backfilled with native material. If placed on slope must install trench breakers at spacing specified by ACOE.
i. Compaction standard shall be ASTM D1557.

ELECTRICAL

a. All 208 and 480V conduits shall have red concrete covers to alert future excavation.
b. See drawing E-09-01

ENVIRONMENTAL

a. A dust control plan is "not" required. Best Management Practices (BMPs) will be used such as keeping concrete and soil wet to minimize fugitive dust.
b. Volatile Organic Compounds (VOCs) in coatings must comply with California Air resource Board (CARB) VOC limits addressed under MAQMD Rule 442.
c. The equipment must be registered as portable equipment with the District per Rule 2280 – Portable Equipment Registration or with the state through the ARB Portable Equipment Registration Program or portable engine equipment shall all be under 50 Bhp to avoid CARB certification requirements. Any off-road, self-propelled, diesel-powered equipment 25 hp or greater must be registered with ARB.
d. Erosion Control: Comply to Station Requirements.

DRAFT
NOT FOR
CONSTRUCTION

ALISTO ENGINEERING GROUP
WALNUT CREEK, CALIFORNIA
2737 N. MAIN STREET, SUITE 200, WALNUT CREEK, CALIFORNIA 94597
OFFICE TEL.# (925)279-5000 FAX# (925)279-5001 WWW.ALISTO.COM

N1808

NO.	DATE	DESCRIPTION	GM/SPEC	DWN	CHKD	SUPV	APVD BY
1	12/2/14	SUPPLEMENTAL PRE-FINAL (90%) DESIGN		DSA	JLA	SS	
0	9/8/14	PRE-FINAL (90%) DESIGN		MJY	RB	RB	

REVISIONS

APPROVED BY
SO
SUPV RB
DSGN MJY
DWN MJY
CHKD RB
OK
DATE 9/8/14
SCALES NTS

TOPOCK GROUNDWATER REMEDIATION PROJECT
COMPRESSOR STATION PONDS UPGRADES

GENERAL NOTES

GAS TRANSMISSION & DISTRIBUTION
PACIFIC GAS AND ELECTRIC COMPANY
SAN FRANCISCO, CALIFORNIA

MICROFILM
BILL OF MATL
DWG LIST
SUPSDS
SUPSD BY
SHEET NO.
G-09-01
REV 1

PLOT TIME: 13:18
PLOT DATE: 11-30-2014
FILENAME: G-09-01_General_Notes.DWG

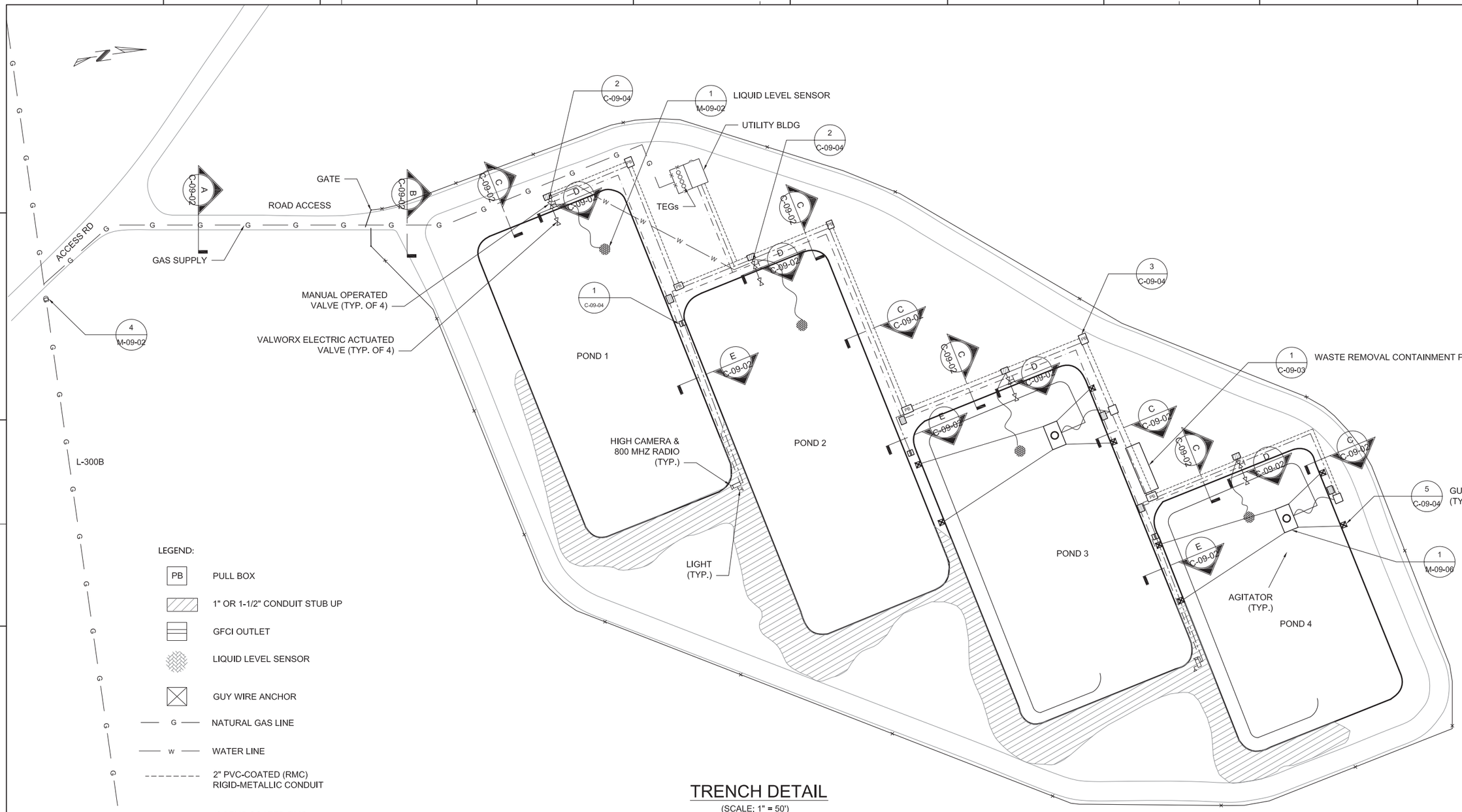

LEGEND:

- PB — PULL BOX
- 1" OR 1-1/2" CONDUIT STUB UP
- GFCI OUTLET
- LIQUID LEVEL SENSOR
- GUY WIRE ANCHOR
- G — NATURAL GAS LINE
- W — WATER LINE
- 2" PVC-COATED (RMC) RIGID-METALLIC CONDUIT
- 1½" PVC COATED RMC RIGID-METALLIC CONDUIT
- 1" PVC-COATED (RMC) RIGID-METALLIC CONDUIT
- ELECTRICAL SUPPLY CABLE

TRENCH DETAIL

(SCALE: 1" = 50')

0 50' 100' 150'

SCALE: 1" = 50'

DRAFT NOT FOR CONSTRUCTION

ALISTO ENGINEERING GROUP
WALNUT CREEK, CALIFORNIA
2737 N. MAIN STREET, SUITE 200, WALNUT CREEK, CALIFORNIA 94597
OFFICE TEL.# (925)279-5000 FAX# (925)279-5001 WWW.ALISTO.COM

N1808

NO.	DATE	DESCRIPTION	GM/SPEC	DWN	CHKD	SUPV	APVD BY
1	12/2/14	SUPPLEMENTARY (91%) DESIGN		DSA	SS	RB	
0	9/8/14	PRE-FINAL (90%) DESIGN		DSA	RB	RB	

REVISIONS

APPROVED BY: SO
SUPV RB
DSGN RB
DWN DSA
CHKD RB
OK
DATE 9/8/14
SCALES 1" = 50'

TOPOCK GROUNDWATER REMEDIATION PROJECT
COMPRESSOR STATION PONDS UPGRADES

TRENCH DETAILS

GAS TRANSMISSION & DISTRIBUTION
PACIFIC GAS AND ELECTRIC COMPANY
SAN FRANCISCO, CALIFORNIA

MICROFILM
BILL OF MATL
DWG LIST
SUPSDS
SUPSD BY
SHEET NO.
C-09-01
REV 1

PLOT TIME: 09:48
PLOT DATE: 11-30-2014
FILENAME: C-09-01_Trench_Details.DWG

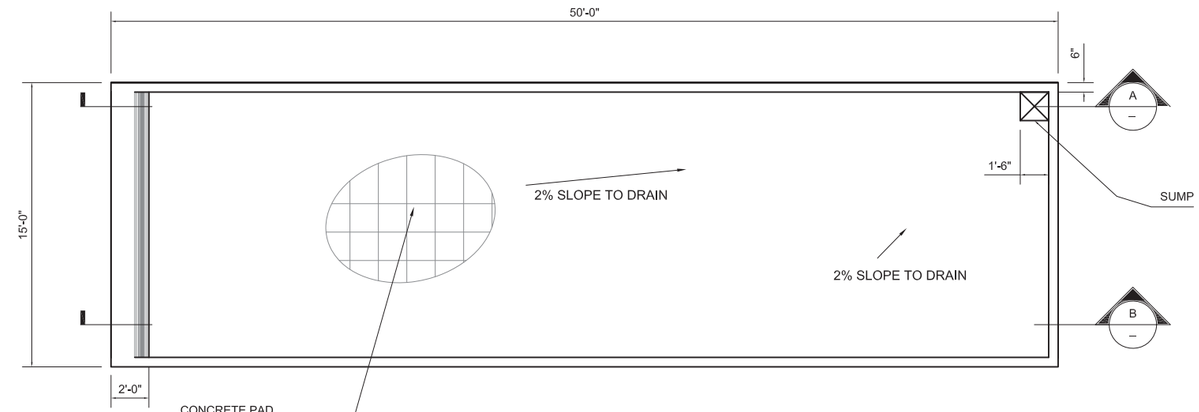

1 WASTE REMOVAL CONTAINMENT PAD
1/4" = 1'-0"
C-09-01

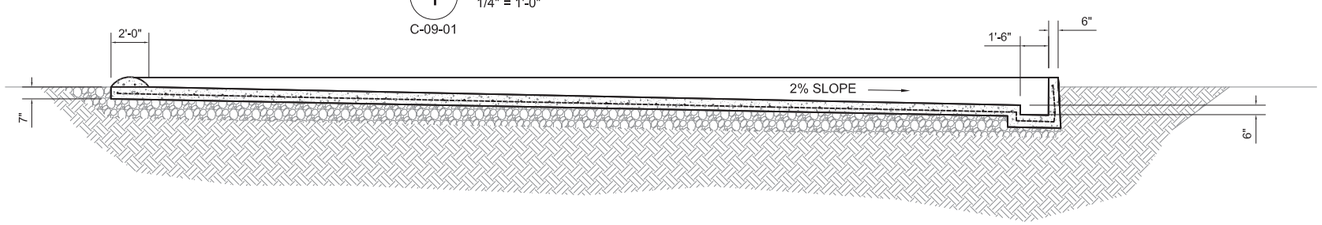

A SECTION
1/4" = 1'-0"

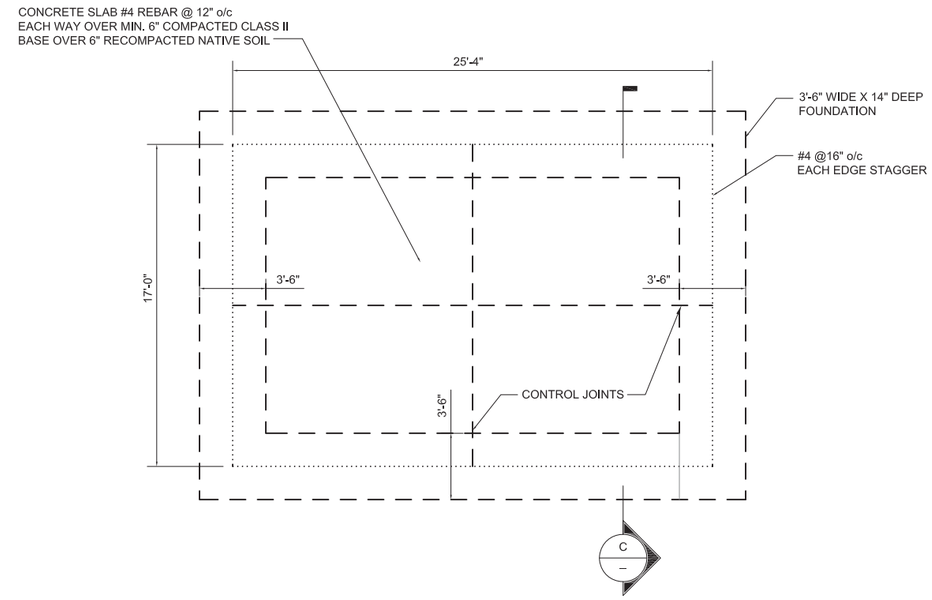

2 GENERATOR SHED PAD DETAIL
1/4" = 1'-0"
C-09-01

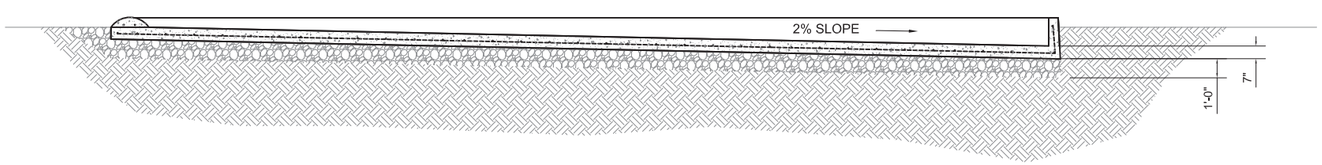

B SECTION
1/4" = 1'-0"

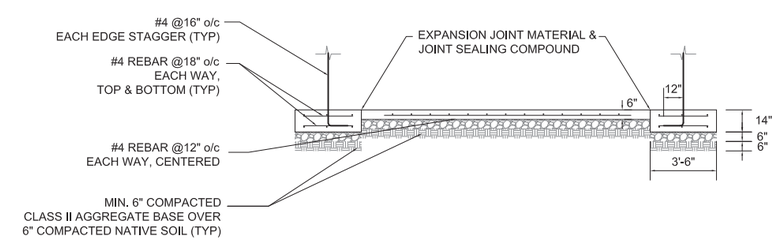

C SECTION
1/4" = 1'-0"

0 4 8 12
SCALE: 1/4"=1'-0"

DRAFT
NOT FOR
CONSTRUCTION

ALISTO ENGINEERING GROUP
WALNUT CREEK, CALIFORNIA

2737 N. MAIN STREET, SUITE 200, WALNUT CREEK, CALIFORNIA 94597
OFFICE TEL.# (925)279-5000 FAX# (925)279-5001 WWW.ALISTO.COM

N1808

NO.	DATE	DESCRIPTION	GM/SPEC	DWN	CHKD	SUPV	APVD BY
1	12/2/14	SUPPLEMENTARY (91%) DESIGN		DSA	SS	RB	
0	9/8/14	PRE-FINAL (90%) DESIGN		MJY	RB	RB	

REVISIONS

APPROVED BY
SO
SUPV RB
DSGN MJY
DWN MJY
CHKD RB
OK
DATE 9/8/14
SCALES 1/4" = 1'

TOPOCK GROUNDWATER REMEDIATION PROJECT
COMPRESSOR STATION PONDS UPGRADES

CONCRETE DETAILS

GAS TRANSMISSION & DISTRIBUTION
PACIFIC GAS AND ELECTRIC COMPANY
SAN FRANCISCO, CALIFORNIA

MICROFILM
BILL OF MATL
DWG LIST
SUPSDS
SUPSD BY
SHEET NO.
C-09-03
REV 1

PLOT TIME: 09:52
PLOT DATE: 08-15-2014
FILENAME: C-09-02_Concrete_Details.DWG

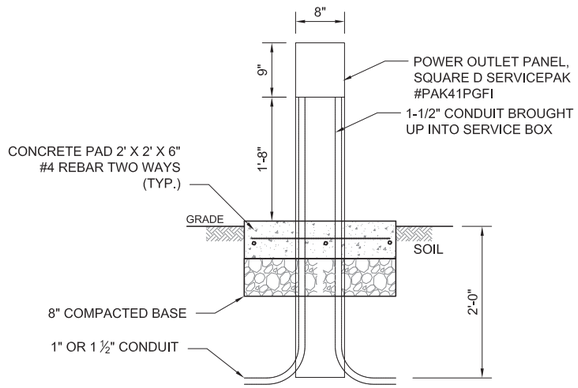

1 GFCI RISER DETAIL (TYP.)
1" = 1'-0"
C-09-01

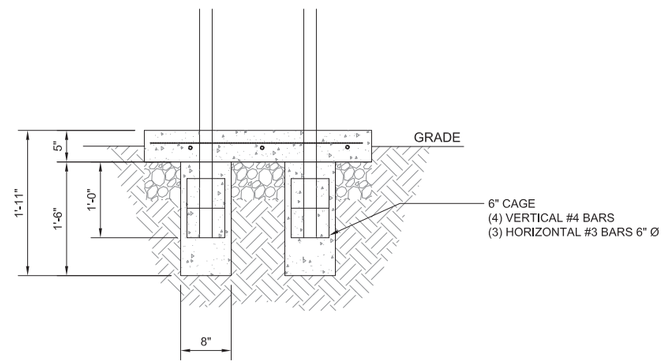

4 REBAR CAGE DETAIL
1" = 1'-0"
C-09-01

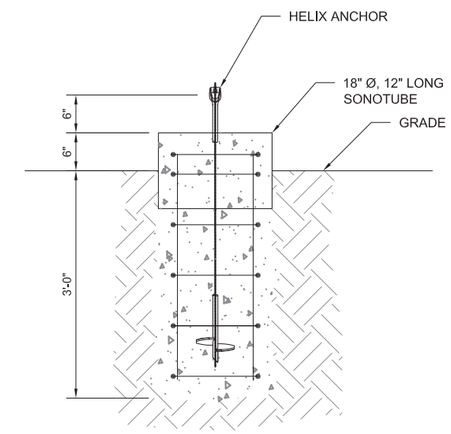

5 GUY WIRE ANCHOR DETAIL
1" = 1'-0"
C-09-01

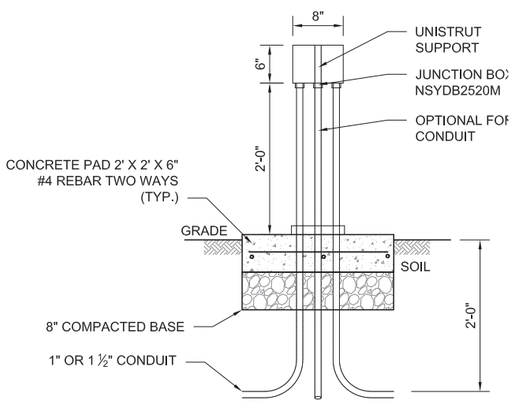

2 CONDUIT RISER DETAIL (TYP.)
1" = 1'-0"
C-09-01

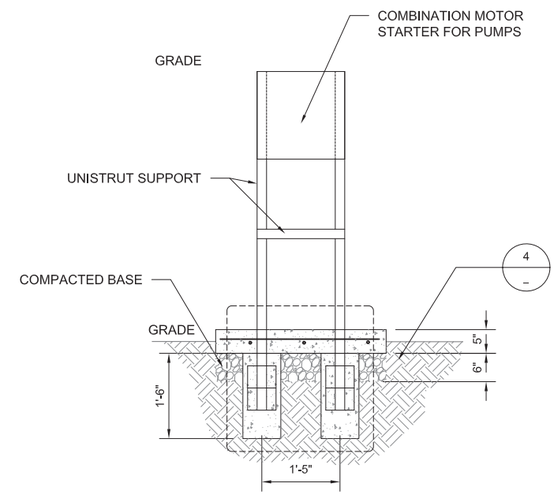

A SECTION
3/4" = 1'-0"

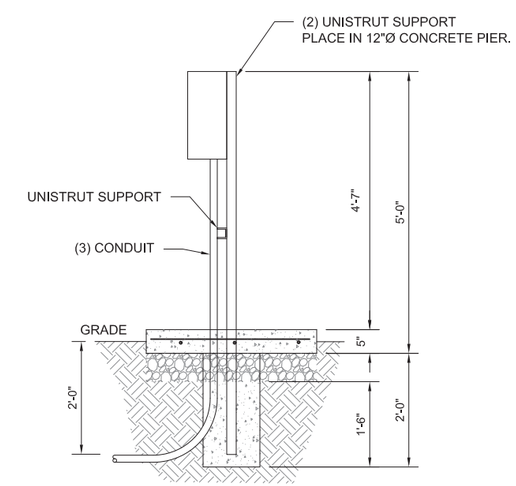

B SECTION
3/4" = 1'-0"

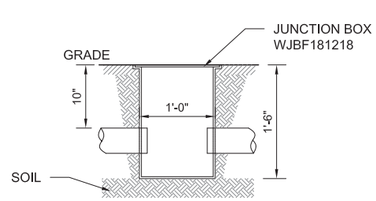

3 PULLBOX DETAIL (TYP.)
1" = 1'-0"
C-09-01

0 1 2 3
SCALE: 1"=1'-0"
0 1 2 3 4
SCALE: 3/4"=1'-0"

DRAFT NOT FOR CONSTRUCTION

ALISTO ENGINEERING GROUP
WALNUT CREEK, CALIFORNIA
2737 N. MAIN STREET, SUITE 200, WALNUT CREEK, CALIFORNIA 94597
OFFICE TEL# (925)279-5000 FAX# (925)279-5001 WWW.ALISTO.COM

N1808

NO.	DATE	DESCRIPTION	GM/SPEC	DWN	CHKD	SUPV	APVD BY
1	12/2/14	SUPPLEMENTARY (91%) DESIGN		DSA	SS	RB	
0	9/8/14	PRE-FINAL (90%) DESIGN		MJY	RB	RB	

REVISIONS

APPROVED BY	
SO	
SUPV	RB
DSGN	MJY
DWN	MJY
CHKD	RB
OK	
DATE	9/8/14
SCALES	AS SHOWN

TOPOCK GROUNDWATER REMEDIATION PROJECT
COMPRESSOR STATION PONDS UPGRADES

CONDUIT DETAILS

GAS TRANSMISSION & DISTRIBUTION
PACIFIC GAS AND ELECTRIC COMPANY
SAN FRANCISCO, CALIFORNIA

MICROFILM
BILL OF MATL
DWG LIST
SUPSDS
SUPSD BY
SHEET NO.
C-09-04
REV 1

PLOT TIME: 13:18
PLOT DATE: 11-30-2014
FILENAME: C-09-03_Conduit_Details.DWG

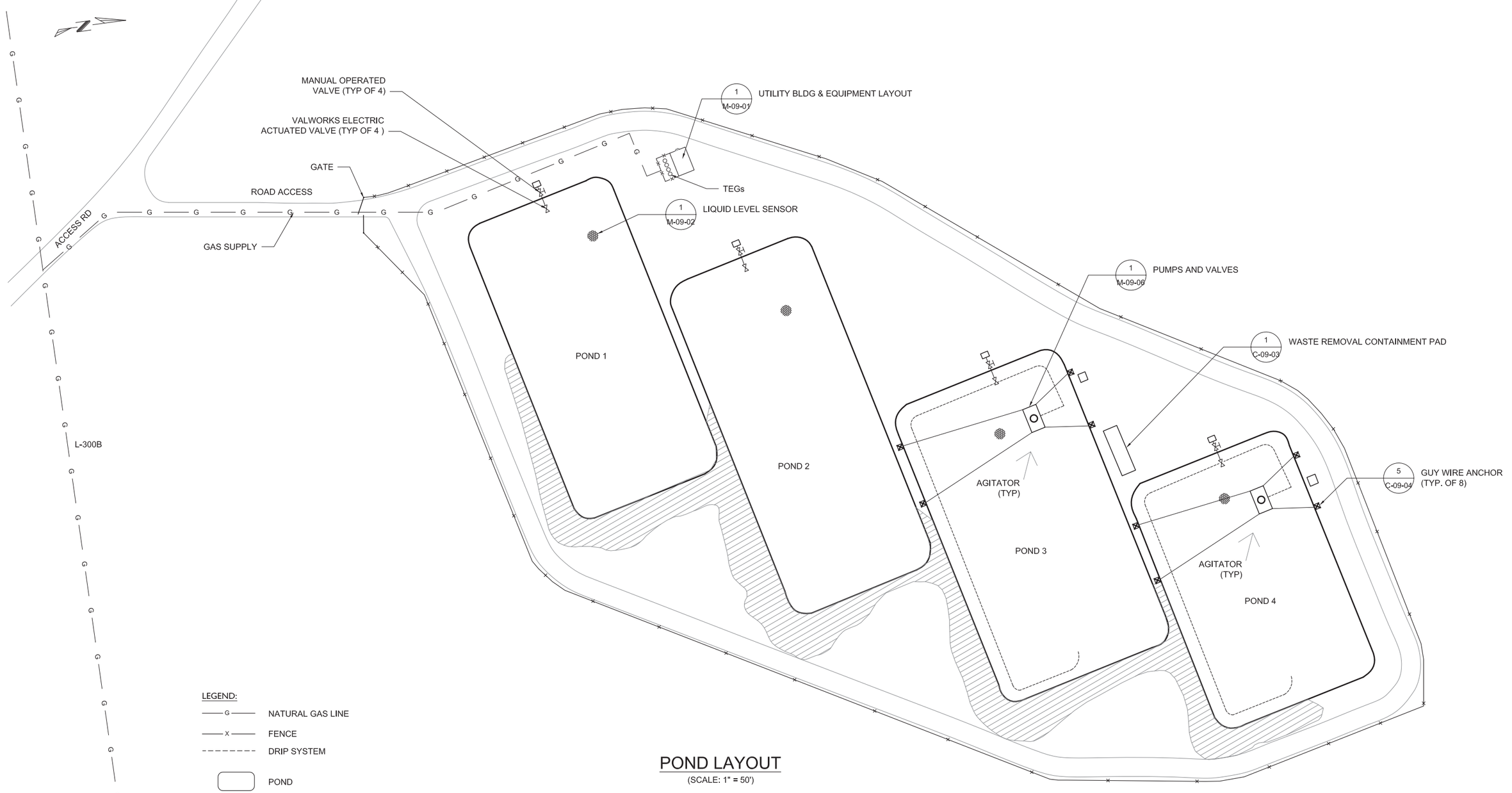

POND LAYOUT

(SCALE: 1" = 50')

DRAFT
NOT FOR
CONSTRUCTION

ALISTO ENGINEERING GROUP
WALNUT CREEK, CALIFORNIA
2737 N. MAIN STREET, SUITE 200, WALNUT CREEK, CALIFORNIA 94597
OFFICE TEL.# (925)279-5000 FAX# (925)279-5001 WWW.ALISTO.COM

N1808

NO.	DATE	DESCRIPTION	GM/SPEC	DWN	CHKD	SUPV	APVD BY
1	12/2/14	SUPPLEMENTARY (91%) DESIGN		DSA	SS	RB	
0	9/8/14	PRE-FINAL (90%) DESIGN		DSA	RB	RB	

REVISIONS

APPROVED BY
SO
SUPV RB
DSGN RB
DWN DSA
CHKD RB
OK
DATE 9/8/14
SCALES 1" = 50'

TOPOCK GROUNDWATER REMEDIATION PROJECT
COMPRESSOR STATION PONDS UPGRADES

POND LAYOUT

GAS TRANSMISSION & DISTRIBUTION
PACIFIC GAS AND ELECTRIC COMPANY
SAN FRANCISCO, CALIFORNIA

MICROFILM
BILL OF MATL
DWG LIST
SUPSDS
SUPSD BY
SHEET NO.
A-09-01
REV 1

FILENAME: A-09-01_Pond_Layout.DWG
PLOT DATE: 08-15-2014
PLOT TIME: 13:18

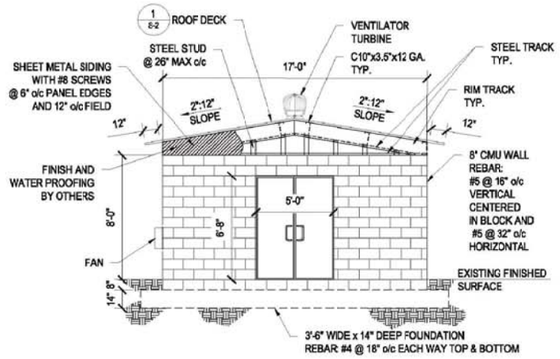

3 SIDE ELEVATION

SCALE: 1/4" = 1'-0"

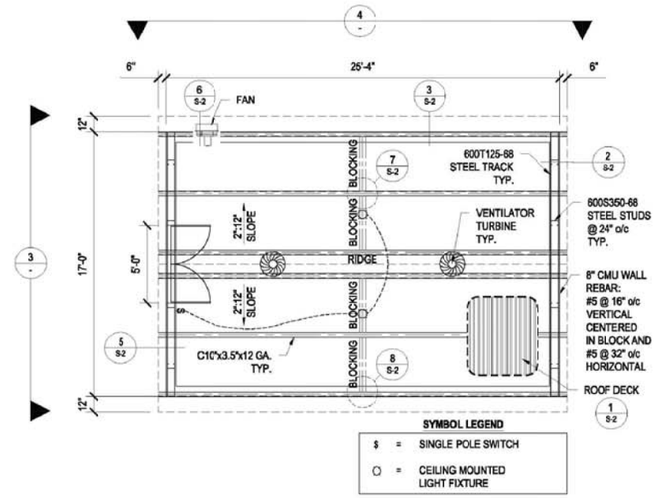

2 ROOF PLAN

SCALE: 1/4" = 1'-0"

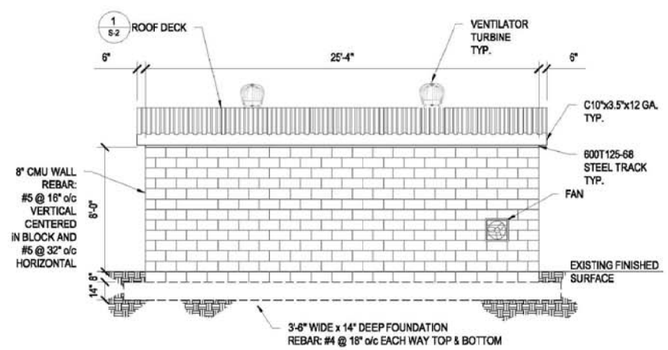

4 FRONT ELEVATION

SCALE: 1/4" = 1'-0"

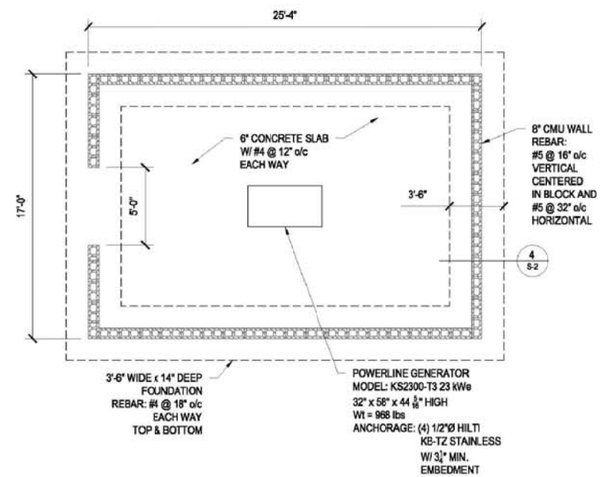

1 FOUNDATION PLAN

SCALE: 1/4" = 1'-0"

GENERAL NOTES:

1. DESIGN PER 2013 C.B.C., 14TH EDITION AISC STEEL MANUAL, 2007 AISI COLD FORMED STEEL MANUAL
2. ALL PERTINENT DIMENSIONS SHALL BE FIELD VERIFIED BY CONTRACTOR PRIOR TO FABRICATION AND INSTALLATION.
3. NO SPRINKLERS.
4. DESIGN LOADS:
   - RISK CATEGORY: II
   - ROOF LIVE LOAD (Lr): ..... 20 psf
   - ROOF SNOW LOAD (S): ..... 0 psf
   - ROOF DEAD LOAD (D): ..... 3.68 MAX psf
   - WIND:
     - BASIC WIND SPEED (3 SECOND GUST) ..... 110 mph
     - WIND EXPOSURE: C
     - INTERNAL PRESSURE: (OPEN STRUCTURE) ..... N/A
     - ..... Kd=0.85
     - ..... Kz=0.85
     - ..... Kzt=1.00
   - SEISMIC:
     - SEISMIC IMPORTANCE FACTOR: 1.0
     - MAPPED SPECTRAL RESPONSE ACCELERATION: ..... Ss=0.241, S1=0.125
   - SITE CLASS: ..... D
     - SPECTRAL RESPONSE COEFFICIENTS: ..... Sds=0.257, Sd1=0.192
     - SEISMIC DESIGN CATEGORY: C
     - SEISMIC FORCE RESISTING SYSTEM: ..... ORDINARY REINFORCED MASONRY SHEAR WALLS
   - DESIGN BASE SHEAR: ..... 0.080 x DL
     - SEISMIC RESPONSE COEFFICIENT: ..... Cs=0.080
     - RESPONSE MODIFICATION FACTOR: ..... R=2.00
     - ANALYSIS PROCEDURE: ..... EQUIVALENT LATERAL FORCE

STEEL NOTES:

1. SIZES ARE BASED ON GAUGE THICKNESS.
2. BEAMS, POSTS (FRAMING MEMBERS) HAVE MIN. YIELD STRENGTHS AS INDICATED.
3. ZINC COATED MATERIALS SHALL BE IN CONFORMANCE WITH ASTM A525-65T AND A361-65T.
4. FASTENERS SHALL BE GALVANIZED, CADMIUM PLATED, OR ZINC.
5. ALL STEEL FABRICATION SHALL COMPLY WITH LATEST AISC SPECIFICATIONS.
6. ALL WELDING SHALL COMPLY WITH LATEST AWS D1.1.
7. BOLTS: ASTM A307 OR GRADE 2 SAE J429
8. REINFORCING STEEL SHALL CONFORM TO REQUIREMENTS OF ASTM A615. REINFORCING SHALL BE GRADE 60 (Fy=60 ksi) FOR ALL BARS # 5 AND LARGER AND GRADE 40 (Fy= 40 ksi) FOR ALL BARS #4 AND SMALLER U.N.O.
9. ANY AND ALL A307 BOLTS CALLED OUT IN THE PLANS OR DETAILS MAY BE SUBSTITUTED FOR SAE J429 GRADE 2 BOLTS OF THE SAME SIZE AND QUANTITY.
10. SHEET METAL SHALL BE ASTM A1003 STRUCTURAL GRADE 33 TYPE H.

FOUNDATION NOTES:

1. FOUNDATIONS ARE DESIGNED PER CODE MINIMUM SOIL VALUES. VERTICAL BEARING = 1,500 psf LATERAL BEARING = 200 pcf. (PER CBC 1806.3.4 LATERAL BEARING PRESSURE MAY BE DOUBLED)

CONCRETE NOTES:

1. CONCRETE MIN. 2,500 psi IN 28 DAYS, TYPE V CEMENT.
2. ALL CONCRETE WORK SHALL COMPLY WITH ACI 301 & 318 LATEST EDITION.
3. AGGREGATE GRADATION AND QUALITY SHALL BE IN ACCORDANCE WITH ACI 302-IR.
4. CONCRETE TO REACH 1000 psi PRIOR TO REMOVAL OF SHORING AND/OR INSTALLATION OF BEAMS AND PURLINS. (NOTE: A HIGHER STRENGTH CONCRETE MAY BE USED TO ACHIEVE 1000 psi SOONER. SUBMIT AN APPROVED CONCRETE MIX DESIGN TO JUSTIFY)
5. CONCRETE TO REACH 2,500 psi PRIOR TO INSTALLATION OF ROOF DECK. (NOTE: A HIGHER STRENGTH CONCRETE MAY BE USED TO ACHIEVE 2,500 psi SOONER. SUBMIT AN APPROVED CONCRETE MIX DESIGN TO JUSTIFY)
6. CLEAR COVER SHALL BE 3" TO EARTH, 2" TO SKY U.N.O.

SPECIAL INSPECTION:

1. HILTI KB-TZ POST INSTALLED ANCHORS

ELECTRICAL NOTES:

1. ELECTRICAL CODE: USE 2013 CEC - CONTRACTOR TO VERIFY AND INSTALL ONLY THE MATERIALS, WIRING, CONDUIT AND DEVICES THAT MEET OR EXCEED CURRENT BUILDING CODES.
2. EXISTING ELECTRICAL: CONTRACTOR TO VERIFY ALL WIRING AND FINAL HOOKUPS TO ALL APPLICABLE EQUIPMENT AND DEVICES AND TO PROVIDE ALL WIRING, CONDUIT, SWITCHES & CIRCUIT BREAKERS REQUIRED TO OPERATE SAID EQUIPMENT IN CONTINUITY OF EXISTING SERVICE.
3. ELECTRICAL EQUIPMENT: CONTRACTOR TO PROVIDE ALL JUNCTION BOXES, OUTLETS AND FIXTURES AS SHOWN ON THE PLANS.
4. ADDITIONAL SERVICES: CONTRACTOR TO VERIFY ANY ADDITIONAL SERVICES REQUIRED TO COMPLETE THE SCOPE OF WORK AS DRAWN ON THE PROJECT PLANS PRIOR TO COMMENCING CONSTRUCTION.

MASONRY NOTES:

MORTAR AND GROUT

1. GROUT: ONE PART PORTLAND CEMENT ASTM C-94-67, THREE PARTS SAND ASTM C-404-61, ONE HALF PART LIME PUTTY ASTM C-207-49, AND ADDITIONAL TWO PARTS PEA GRAVEL ASTM C-404-61 (MAY BE ADDED IF GROUT SPACES ARE GREATER THAN 4" IN ALL DIRECTIONS). TO BE OF FLUID CONSISTENCY AND OBTAIN F'c=2000 PSI AT 28 DAYS. MAXIMUM GROUT LIFT= 4'-0"
2. HIGH LIFT GROUTING SHALL BE PER C.B.C. TESTED, INSPECTED AND APPLY ADMIXTURES FOR INCREASED FLUIDITY.
3. MORTAR: ASTM C-270-521 ONE PART PORTLAND CEMENT ASTM C-91-67, THREE PARTS SAND ASTM C-144-70, AND ONE HALF PART LIME PUTTY OR HYDRATED LIME ASTM C-207-49.
4. ONE HALF STRESS DESIGN USED UNLESS NOTED OTHERWISE. NO CONTINUOUS INSPECTION REQUIRED UNLESS NOTED OTHERWISE ON PLANS.

UNIT MASONRY

1. CONCRETE BLOCK COMPRESSIVE STRENGTH = 1900 PSI
2. ALL UNITS TYPE N, ASTM C-90, F'm=1500 PSI, SOLID GROUTED. STORE UNITS UNDER COVER AT JOB SITE.
3. CLAY OR SHALE BRICK: ASTM C-62-58, C-216-66, AND C-652-70

MASONRY REINFORCEMENT

1. REFER TO STEEL NOTES
2. CLAY OR SHALE BRICK: ASTM C-62-58, C-216-66 AND C-652-70

STEL ENGINEERING
109 E ESCALONES
SAN CLEMENTE, CA 92672
949.388.9333 | FAX 949.388.3773

REGISTERED PROFESSIONAL ENGINEER DUSTIN K. ROSENING C 72487 EXP. 06-30-15 STATE OF CALIFORNIA

12-10-14

TOPOCK POND POWER BUILDING
PG&E TOPOCK
COMPRESSOR STATION,
PARK MOABI
NEEDLES, CA 92363

AHJ APPROVAL

REVISIONS

MARK	DATE	DESCRIPTION

4 STEL JOB #	14-1195
DATE	12-10-14
DRAWN BY	MAP
CHECKED	BGS

FRAMING PLANS

S-1

Plotted: 12/10/2014 8:00:48 PM, Dwnd: 12/10/2014 7:55:28 PM, CJ:\Alisto Projects\14-1195 - ALISTO ENGINEERING - TOPOCK POND POWER BLDG - PG&E\S-01-S-14.dwg - rosenings

PLOT TIME: 13:18

PLOT DATE: 08-15-2014

FILENAME: A-09-02_Building.DWG

DRAFT NOT FOR CONSTRUCTION

ALISTO ENGINEERING GROUP
WALNUT CREEK, CALIFORNIA
2737 N. MAIN STREET, SUITE 200, WALNUT CREEK, CALIFORNIA 94597
OFFICE TEL.# (925)279-5000 FAX# (925)279-5001 WWW.ALISTO.COM

N1808

NO.	DATE	DESCRIPTION	GM/SPEC	DWN	CHKD	SUPV	APVD BY
1	12/2/14	SUPPLEMENTARY (91%) DESIGN		DSA	RB	JLA	
0	9/8/14	PRE-FINAL (90%) DESIGN		DSA	RB	JLA	

REVISIONS

APPROVED BY	
SO	
SUPV	RB
DSGN	RB
DWN	DSA
CHKD	JLA
OK	
DATE	9/8/14
SCALES	1/2" = 1'

TOPOCK GROUNDWATER REMEDIATION PROJECT
COMPRESSOR STATION PONDS UPGRADES

FRAMING PLANS

GAS TRANSMISSION & DISTRIBUTION
PACIFIC GAS AND ELECTRIC COMPANY
SAN FRANCISCO, CALIFORNIA

MICROFILM	
BILL OF MATL	
DWG LIST	
SUPSDS	
SUPSD BY	
SHEET NO.	A-09-02
REV	1

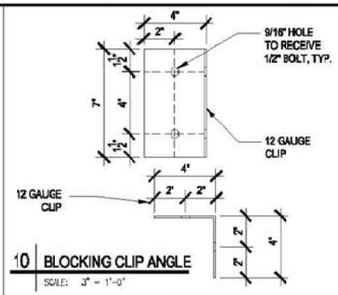

10 BLOCKING CLIP ANGLE
SCALE: 3" = 1'-0"

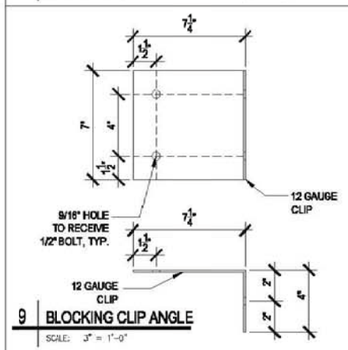

9 BLOCKING CLIP ANGLE
SCALE: 3" = 1'-0"

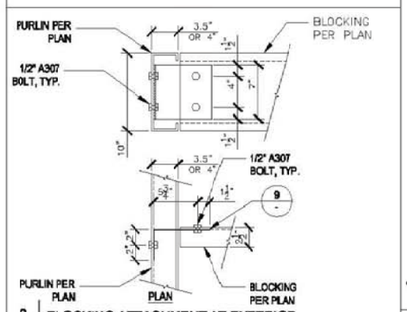

8 BLOCKING ATTACHMENT AT EXTERIOR
SCALE: 1 1/2" = 1'-0"

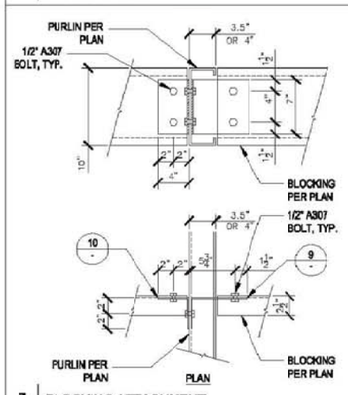

7 BLOCKING ATTACHMENT
SCALE: 1 1/2" = 1'-0"

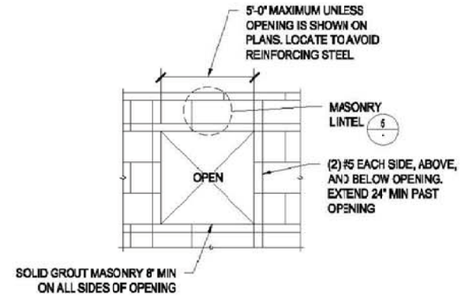

6 OPENING AT MASONRY WALL
SCALE: 3/4" = 1'-0"

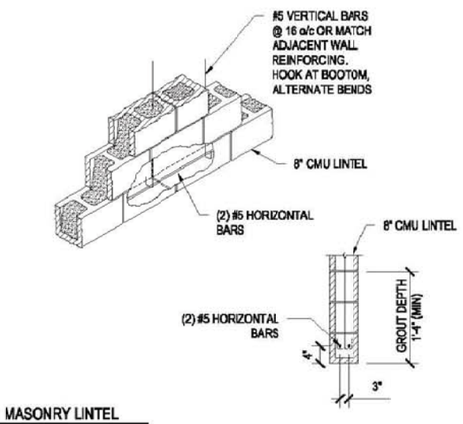

5 MASONRY LINTEL
SCALE: 3/4" = 1'-0"

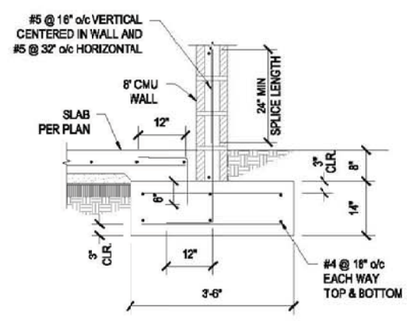

4 FOUNDATION DETAIL
SCALE: 3/4" = 1'-0"

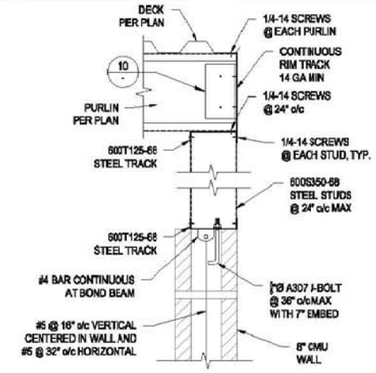

3 SECTION
SCALE: 1-1/2" = 1'-0"

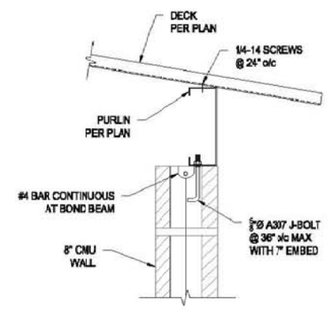

2 SECTION
SCALE: 1-1/2" = 1'-0"

VULCRAFT 1.0 E
DECK SPECIFICATIONS

Deck Type	Design Thickness (in.)	W (psf)	Section Properties				Fy (ksi)
			I+ (in⁴/ft)	S+ (in³/ft)	I- (in⁴/ft)	S- (in³/ft)	
E26	0.0179	1.05	0.040	0.087	0.042	0.071	80

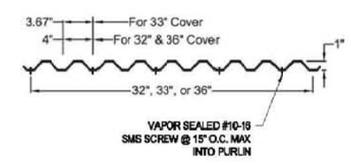

1 ROOF DECK SECTION
SCALE: N.T.S.

STEL ENGINEERING
109 E ESCALONES
SAN CLEMENTE, CA 92672
949.388.9333 | FAX 949.388.3773

12-10-14

TOPOCK POND POWER BUILDING
PG&E TOPOCK
COMPRESSOR STATION,
PARK MOABI
NEEDLES, CA 92363

AHJ APPROVAL

REVISIONS

MARK	DATE	DESCRIPTION

4 STEL JOB #	14-1195
DATE	12-10-14
DRAWN BY	MAP
CHECKED	BGS

DETAILS

S-2

DRAFT
NOT FOR
CONSTRUCTION

ALISTO ENGINEERING GROUP
WALNUT CREEK, CALIFORNIA
2737 N. MAIN STREET, SUITE 200, WALNUT CREEK, CALIFORNIA 94597
OFFICE TEL.# (925)279-5000 FAX# (925)279-5001 WWW.ALISTO.COM

N1808

NO.	DATE	DESCRIPTION	GM/SPEC	DWN	CHKD	SUPV	APVD BY
1	12/2/14	SUPPLEMENTARY (91%) DESIGN		DSA	RB	JLA	
0	9/8/14	PRE-FINAL (90%) DESIGN		DSA	RB	JLA	

REVISIONS

APPROVED BY
SO
SUPV RB
DSGN RB
DWN DSA
CHKD JLA
OK
DATE 9/8/14
SCALES 1/2" = 1'

TOPOCK GROUNDWATER REMEDIATION PROJECT
COMPRESSOR STATION PONDS UPGRADES

DETAILS

GAS TRANSMISSION & DISTRIBUTION
PACIFIC GAS AND ELECTRIC COMPANY
SAN FRANCISCO, CALIFORNIA

MICROFILM
BILL OF MATL
DWG LIST
SUPSDS
SUPSD BY
SHEET NO.
A-09-03
REV 1

FILENAME: A-09-02_Building.DWG
PLOT DATE: 08-15-2014
PLOT TIME: 13:18

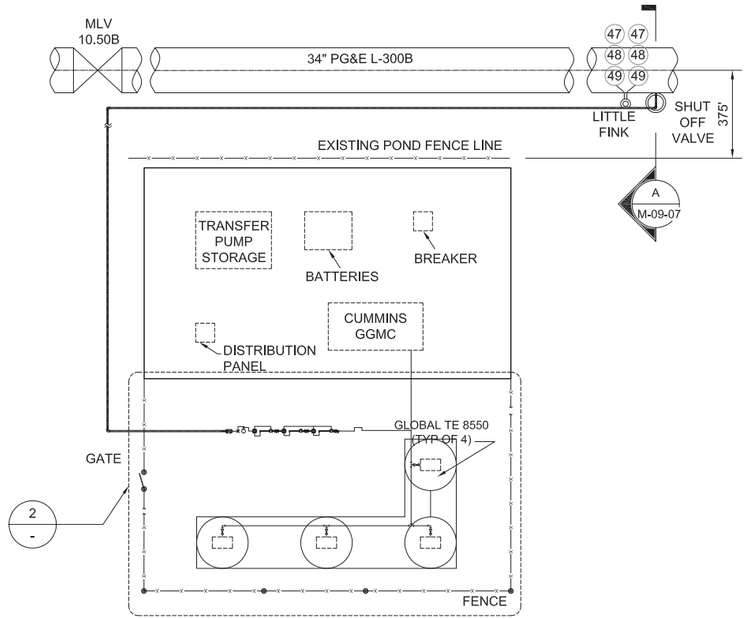

1 GENERATOR PLAN
N.T.S.

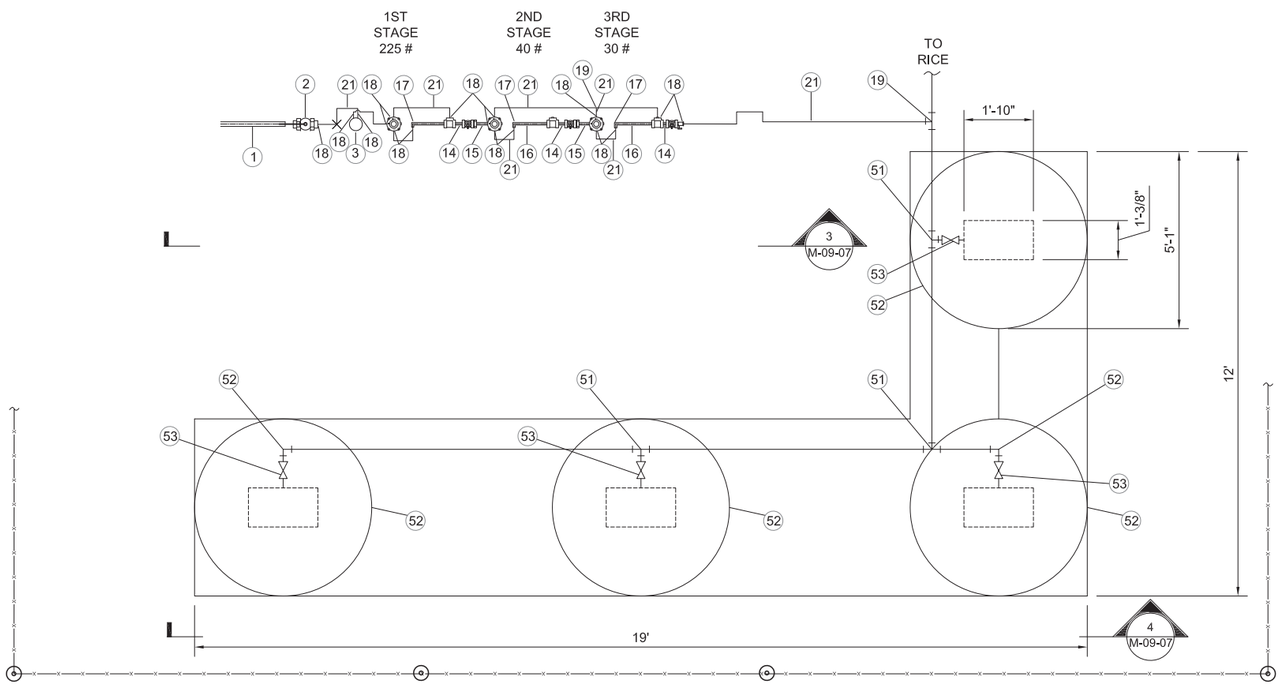

2 GENERATOR DETAIL
N.T.S.

PG&E CODE	ITEM NO.	QTY	ORDER NO. PM 30944033 DESCRIPTION	CATALOG OR DWG REF.
011036	1	550'	PIPE STEEL SEAMLESS 1.050" OD x D154" WALL STD. API-5L. GR B. SMLS. WRAP	GAS STD A-15
034459	2	1	VALVE. 3/4" BALL. THREADED. 2500 PIC. MARPAC	GAS STD F-20
870001	3	1	FILTER. WELKER. SULFUR REMOVAL. 1/4" FNPT	WELKER
030550	4	1	PILOT. MOONEY. SERIES 20. HP BK SPRING 200-500#	GAS STD HBO 1
446P52	5	2	PILOT. MOONEY. SERIES 20. HP BK SPRING 25-90#	GAS STD HBO 1
035156	6	3	VALVE NEEDLE. 1/4"MNPT X 1/4" FNPT PN H1VDC-22	GAS STD F-70
035153	7	1	VALVE NEEDLE. 1/4"MNPT X 1/4" FNPT PN H1VDC-2	GAS STD F-70
442573	8	1	MUELLER, 1" CURB VALVE TEE, MODEL No. H-17800	GAS STD A43.1
022445	9	1	MUELLER, TEE. 1' MODEL No. H-17656	GAS STD C-11
022588	10	10	ELBOW, 3/4" SOCKET WELD, 3000#	GAS STD B-21
021195	11	1	TEE, 3/4" THREADED. 3000#	GAS STD B-14
022268	12	2	BUSHING, 3/4" MNPT X 1/4" FNPT	INDUSTRIAL
021247	13	6	PLUG, 1/4" FORGED STEEL. HEX HEAD	GAS STD B10.1
870002	14	3	NIPPLE. 1/4". EXTRA STRONG. 2" LONG	GAS STD B13.1
870003	15	3	NIPPLE. 1/4". EXTRA STRONG. 6" LONG	GAS STD B13.1
870004	16	2	NIPPLE. 1/4". EXTRA STRONG. 18" LONG	GAS STD B13.1
870005	17	3	ELBOW, 1/4". SWAGELOK. SS-4-E, 7200 PSIG RATING	SWAGELOK
028140	18	19	MALE CONNECTOR, 3/8" TUBING X 1/4 PIPE THD	GAS STD B-62
028197	19	2	CONNECTER, ALL TUBE TEE, 3/8" TUBING	GAS STD B-62
870006	20	6	TEE, 1/4". SWAGELOK. SS-4-T, 7200 PSIG RATING	SWAGELOK
011015	21	45'	TUBING, 304SS, 3/8" OD, 0.035"WT	GAS STD A-22
870007	22	70'	STRUT, CHANNEL, SINGLE, 1-5/8"X 1-5/8", PN 3310T2	McMASTERCARR
870008	23	4	STRUT,CHANNEL, MOUNT CLAMPS, 3/8", PN 3115T13	McMASTERCARR
870009	24	2	STRUT CHANNEL, 5-HOLE GUSSET CORNER PLATE, PN 33125T22	McMASTERCARR
870010	25	5	STRUT CHANNEL, 5-HOLE GUSSET T-PLATE, 33125T92	McMASTERCARR
870011	26	1	STRUT,CHANNEL, CROSS PLATE, 33125T92	McMASTERCARR
870012	27	1	STRUT, SUPPORT BASE, 33145T32	McMASTERCARR
870013	28	1 PNG	STRUT, CLAMPING NUTS WITH SPRING, 3259T15	McMASTERCARR
294991	32	AS REQ'D	WIRE, #10 HMWPE WITH 47 MIL THICKNESS 600 VOLTS, SOLID COPPER, BLACK INSULATION	GAS STD 0-10
569382	33	1	LITTLE FINK, TEST LEAD BOX, 2-TERMINAL ORANGE	GAS STD 0-10.1
360469	34	1	CONDUIT, 1-1/4" PVC, SCHEDULE 40 (FOR LITTLE FINK)	GAS STD 0-10.1
041189	35	1	LID, TRAFFIC RATED (H-20), 17"(W) X 30"(L) X 12"(H) (INSIDE DIMENSIONS), (FOR USE AROUND GAS PIPING)	
041184	36	1	VALVE BOX, TRAFFIC RATED (H-20) 17"(W) X 30"(L) X 12"(H) (INSIDE DIMENSIONS), (FOR USE AROUND GAS PIPING)	
870016	37	256'	#5 REINFORCING BAR	
870017	38	20	ANCHOR BOLT, 1/2" DIA X 12" LONG	
870018	39	9'	SONATUBE. 12" DIAMETER	
870019	40	3 YD	CONCRETE, FC= 3500 PSI	
043271	41	1	BODY, CONCRETE VALVE FRAME, 10-3/8" X 12", GR-5	GAS STD K-40
043225	42	1	CONCRETE, VALVE CAST IRON 11-1/8" DIA, FULL TRAFFIC	GAS STD K-40
870020	43	3	QUICK CONNECT FITING, SS-0C6-B-4PM, SWAGELOK	SWAGELOK
870021	44	3	BODY PROTECTOR, SS-QC4-BP, SWAGELOK	SWAGELOK
159260	45	4	CARTRIDGE, CALDWELD OR THERMOWELD 15 GRAM	GAS STD 0-10
0303755	46	4	SLEEVE, COPPER, THERMOWELD A200 OR EQUIVALENT	GAS STD 0-10
0569383	47	4	HANDY CAP, ROYSTON, 4" X 4" PATCH	GAS STD F-27
N/A	48	4	THERMOELECTRIC GENERATOR, GLOBAL THERMOELECTRIC MODEL 8550	GLOBAL THERMOELECTRIC
	49	1	VALVE IDENTIFICATION TAG	
	50	TO SUIT	CONCRETE, 4000 PSI	
	51	3	TEE, MALE BRANCH, ⅜" TB X ¼" MNPT	SWAGELOK
	52	2	ELBOW, ⅜" TB X ¼" MNPT	SWAGELOK
	53	4	VALVE, BALL ¼" NPT, 2000LB	GAS STD F-70

DRAFT
NOT FOR
CONSTRUCTION

ALISTO ENGINEERING GROUP
WALNUT CREEK, CALIFORNIA
2737 N. MAIN STREET, SUITE 200, WALNUT CREEK, CALIFORNIA 94597
OFFICE TEL.# (925)279-5000 FAX# (925)279-5001 WWW.ALISTO.COM

NO.	DATE	DESCRIPTION	GM/SPEC	DWN	CHKD	SUPV	APVD BY
1	12/2/14	SUPPLEMENTAL PRE-FINAL (90%) DESIGN		DSA	JLA	SS	
0	9/8/14	PRE-FINAL (90%) DESIGN		DSA	RB	RB	

REVISIONS

APPROVED BY
SO
SUPV RB
DSGN RB
DWN DSA
CHKD RB
OK
DATE 9/8/14
SCALES NTS

TOPOCK GROUNDWATER REMEDIATION PROJECT
COMPRESSOR STATION PONDS UPGRADES

GENERATOR AND CONNECTOR PLAN

GAS TRANSMISSION & DISTRIBUTION
PACIFIC GAS AND ELECTRIC COMPANY
SAN FRANCISCO, CALIFORNIA

MICROFILM
BILL OF MATL
DWG LIST
SUPSDS
SUPSD BY
SHEET NO.
M-09-01
REV 1

FILENAME: M-09-01_Gas_Supply_Tap_Plan_Details.DWG
PLOT DATE: 01-06-2015
PLOT TIME: 11:55

N1808

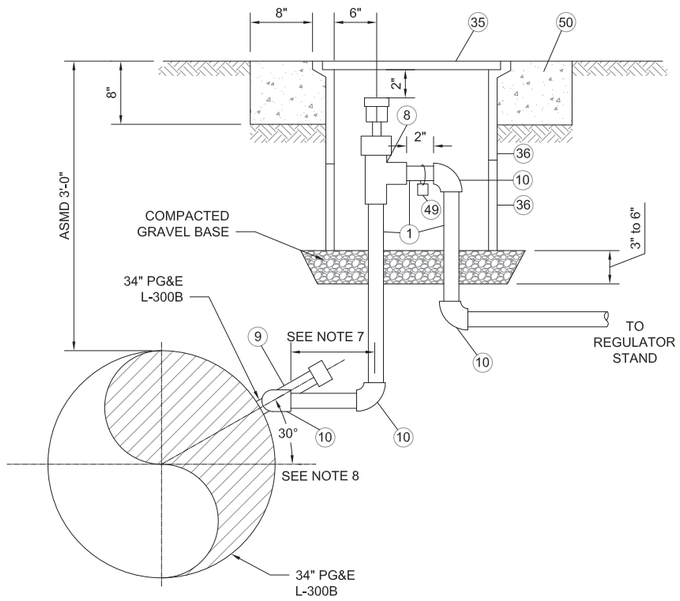

A SECTION
N.T.S.

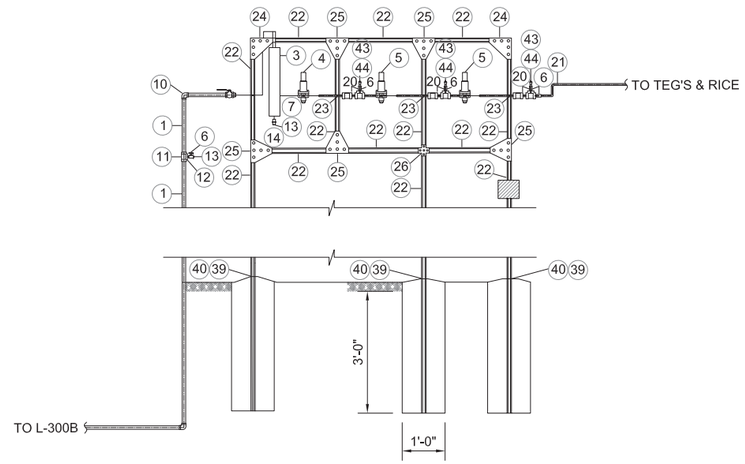

3 REGULATOR ELEVATION
N.T.S.

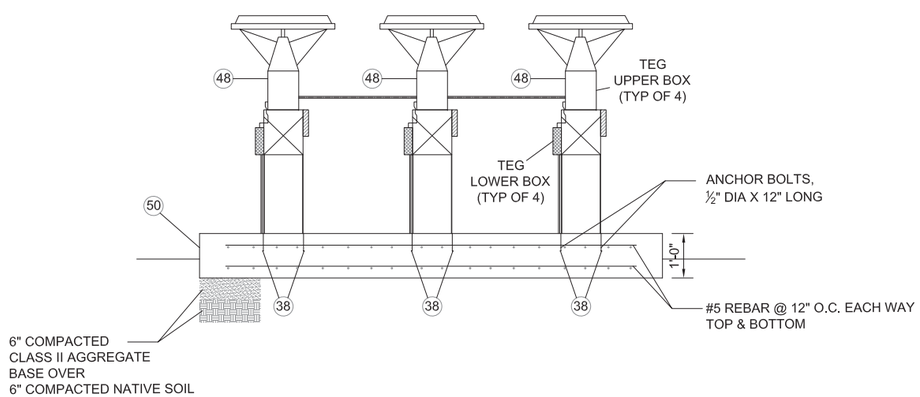

4 TEG ELEVATION
N.T.S.

STA. N/A
JOB NO.
B/M ITEM NO. 1

DESIGN CRITERIA

LOCATION CLASS 1
DESIGN FACTOR 0.72
FDP 894 PSIG 6.71 % SMYS
MAOP 894 PSIG 6.71 % SMYS
STRENGTH TEST PRESSURE
MAX. 1541 PSIG 15.01% SMYS
MIN. 1341 PSIG 13.06% SMYS
9240 PSIG 90 % SMYS
TEST MEDIUM WATER
PIPE SPEC API51 GRB SMLS
O.D. 1.050
W.T. 0.154 INCHES
WELD INSPECTION GAS (STD.D -40)*
RADIOGRAPHIC
20% MIN 1% OF EACH WELDERS
100% DAILY WORK

* VISUALLY INSPECT 100% OF ALL WELDS THAT ARE NOT RADIOGRAPHICALLY INSPECTED (THIS REQUIREMENT APPLIES EVEN IF NO RADIOGRAPHIC INSPECTIONS ARE REQUIRED.

GM 134616 1956

EXIST PIPE SPECS
HEADER SIZE: 34.00
PIPE SPECS: API5L - X52 SAWL (DSAW)
WALL THICKNESS: 0.406 INCHES
PRESENT MAOP: 867
% SMYS @ MAOP: 69.81
MAXIMUM ALLOWABLE PRESSURE DURING WELDING (G.S. & S. D-22) (**620 PSIG) **240 PSIG IF WELDING WITHIN 3" OF A LONGITUDINAL SEAM. CIRCUMFERENTIAL, AND ANY BRANCH WELD ON ANY TYPE OF PIPE EXCEPT THE LONGITUDINAL SEAM OF OSAW PIPE PER GAS STD D-22 PAGE 3 OF 14 SECT 3-B

PG&E CODE	ITEM NO.	QTY	ORDER NO. PM 30944033 DESCRIPTION	CATALOG OR DWG REF.
011036	1	550'	PIPE STEEL SEAMLESS 1.050" OD x D154" WALL STD. API-5L. GR B. SMLS. WRAP	GAS STD A-15
034459	2	1	VALVE. 3/4" BALL. THREADED. 2500 PIC. MARPAC	GAS STD F-20
870001	3	1	FILTER. WELKER. SULFUR REMOVAL. 1/4" FNPT	WELKER
030550	4	1	PILOT. MOONEY. SERIES 20. HP BK SPRING 200-500#	GAS STD HBO 1
446P52	5	2	PILOT. MOONEY. SERIES 20. HP BK SPRING 25-90#	GAS STD HBO 1
035156	6	3	VALVE NEEDLE. 1/4"MNPT X 1/4" FNPT PN H1VDC-22	GAS STD F-70
035153	7	1	VALVE NEEDLE. 1/4"MNPT X 1/4" FNPT PN H1VDC-2	GAS STD F-70
442573	8	1	MUELLER, 1" CURB VALVE TEE, MODEL No. H-17800	GAS STD A43.1
022445	9	1	MUELLER, TEE. 1' MODEL No. H-17656	GAS STD C-11
022588	10	10	ELBOW, 3/4" SOCKET WELD, 3000#	GAS STD B-21
021195	11	1	TEE, 3/4" THREADED. 3000#	GAS STD B-14
022268	12	2	BUSHING, 3/4" MNPT X 1/4" FNPT	INDUSTRIAL
021247	13	6	PLUG, 1/4" FORGED STEEL. HEX HEAD	GAS STD B10.1
870002	14	3	NIPPLE. 1/4". EXTRA STRONG. 2" LONG	GAS STD B13.1
870003	15	3	NIPPLE. 1/4". EXTRA STRONG. 6" LONG	GAS STD B13.1
870004	16	2	NIPPLE. 1/4". EXTRA STRONG. 18" LONG	GAS STD B13.1
870005	17	3	ELBOW, 1/4". SWAGELOK. SS-4-E, 7200 PSIG RATING	SWAGELOK
028140	18	19	MALE CONNECTOR, 3/8" TUBING X 1/4 PIPE THD	GAS STD B-62
028197	19	2	CONNECTER, ALL TUBE TEE, 3/8" TUBING	GAS STD B-62
870006	20	6	TEE, 1/4". SWAGELOK. SS-4-T, 7200 PSIG RATING	SWAGELOK
011015	21	45'	TUBING, 304SS, 3/8" OD, 0.035"WT	GAS STD A-22
870007	22	70'	STRUT, CHANNEL, SINGLE, 1-5/8"X 1-5/8", PN 3310T2	McMASTERCARR
870008	23	4	STRUT,CHANNEL, MOUNT CLAMPS, 3/8", PN 3115T13	McMASTERCARR
870009	24	2	STRUT CHANNEL, 5-HOLE GUSSET CORNER PLATE, PN 33125T22	McMASTERCARR
870010	25	5	STRUT CHANNEL, 5-HOLE GUSSET T-PLATE, 33125T92	McMASTERCARR
870011	26	1	STRUT,CHANNEL, CROSS PLATE, 33125T92	McMASTERCARR
870012	27	1	STRUT, SUPPORT BASE, 33145T32	McMASTERCARR
870013	28	1 PNG	STRUT, CLAMPING NUTS WITH SPRING, 3259T15	McMASTERCARR
294991	32	AS REQ'D	WIRE, #10 HMWPE WITH 47 MIL THICKNESS 600 VOLTS, SOLID COPPER, BLACK INSULATION	GAS STD 0-10
569382	33	1	LITTLE FINK, TEST LEAD BOX, 2-TERMINAL ORANGE	GAS STD 0-10.1
360469	34	1	CONDUIT, 1-1/4" PVC, SCHEDULE 40 (FOR LITTLE FINK)	GAS STD 0-10.1
041189	35	1	LID, TRAFFIC RATED (H-20), 17"(W) X 30"(L) X 12"(H) (INSIDE DIMENSIONS), (FOR USE AROUND GAS PIPING)	
041184	36	1	VALVE BOX, TRAFFIC RATED (H-20) 17"(W) X 30"(L) X 12"(H) (INSIDE DIMENSIONS), (FOR USE AROUND GAS PIPING)	
870016	37	256'	#5 REINFORCING BAR	
870017	38	20	ANCHOR BOLT, 1/2" DIA X 12" LONG	
870018	39	9'	SONATUBE. 12" DIAMETER	
870019	40	3 YD	CONCRETE, FC= 3500 PSI	
043271	41	1	BODY, CONCRETE VALVE FRAME, 10-3/8" X 12", GR-5	GAS STD K-40
043225	42	1	CONCRETE, VALVE CAST IRON 11-1/8" DIA, FULL TRAFFIC	GAS STD K-40
870020	43	3	QUICK CONNECT FITING, SS-0C6-B-4PM, SWAGELOK	SWAGELOK
870021	44	3	BODY PROTECTOR, SS-QC4-BP, SWAGELOK	SWAGELOK
159260	45	4	CARTRIDGE, CALDWELD OR THERMOWELD 15 GRAM	GAS STD 0-10
0303755	46	4	SLEEVE, COPPER, THERMOWELD A200 OR EQUIVALENT	GAS STD 0-10
0569383	47	4	HANDY CAP, ROYSTON, 4" X 4" PATCH	GAS STD F-27
N/A	48	4	THERMOELECTRIC GENERATOR, GLOBAL THERMOELECTRIC MODEL 8550	GLOBAL THERMOELECTRIC
	49	1	VALVE IDENTIFICATION TAG	
	50	TO SUIT	CONCRETE, 4000 PSI	
	51	3	TEE, MALE BRANCH, ⅜" TB X ¼" MNPT	SWAGELOK
	52	2	ELBOW, ⅜" TB X ¼" MNPT	SWAGELOK
	53	4	VALVE, BALL ¼" NPT, 2000LB	GAS STD F-70

NOTES:

1) HANDY CAPS SHALL BE INSTALLED PER GS:S E-27.
2) NO UNDERGROUND WIRE SPLICES SHALL BE USED EXCEPT AT THE ANODE AND THE PIPELINE.
3) BURIED WIRE SPLICES UP TO NO. 10 WIRE SHALL BE INSTALLED PER GS:S O-12.
4) BURIED WIRE SPLICES GREATER THAN NO. 10 WIRE SHALL BE MADE USING SPLIT BOLT CONNECTORS AND A DRYCON WATER PROOFING KIT FROM FARWEST CORROSION CONTROL.
5) USE OF THIS ASSEMBLY IS LIMITED TO FACILITIES WITH A DESIGN PRESSURE OF 1200 PSIG OR LESS.
6) THIS SHUT-OFF IS IN COMPLIANCE WITH GENERAL ORDER NO. 112-E, AND CODE OF FEDERAL REGULATIONS 49 CFR 192.203 (b)(2), "INSTRUMENT, CONTROL AND SAMPLING PIPE & COMPONENTS.
7) INSTALL SHUT-OFF AS NEAR AS PRACTICAL TO MAIN LINE.
8) SHOULD NOT INSTALL MUELLER TEE WITHIN 3" OF MAIN LINE LONGITUDINAL SEAM OR OTHER WELD. WELDING IS PERMITTED LESS THAN 3" FROM A WELD WITH SME APPROVAL.

DRAFT
NOT FOR
CONSTRUCTION

ALISTO ENGINEERING GROUP
WALNUT CREEK, CALIFORNIA
2737 N. MAIN STREET, SUITE 200, WALNUT CREEK, CALIFORNIA 94597
OFFICE TEL.# (925)279-5000 FAX# (925)279-5001 WWW.ALISTO.COM

NO.	DATE	DESCRIPTION	GM/SPEC	DWN	CHKD	SUPV	APVD BY
0	12/2/14	SUPPLEMENTAL PRE-FINAL (90%) DESIGN		DSA	JLA	SAS	

REVISIONS

APPROVED BY
SQ
SUPV SAS
DSGN RB
DWN DSA
CHKD JLA
OK
DATE 12/2/14
SCALES NTS

TOPOCK GROUNDWATER REMEDIATION PROJECT
COMPRESSOR STATION PONDS UPGRADES

TEG & CONNECTION DETAILS

GAS TRANSMISSION & DISTRIBUTION
PACIFIC GAS AND ELECTRIC COMPANY
SAN FRANCISCO, CALIFORNIA

MICROFILM
BILL OF MATL
DWG LIST
SUPSDS
SUPSD BY
SHEET NO.
M-09-07
REV 0

PLOT TIME: 11:55
PLOT DATE: 06-19-2014
FILENAME: M-09-01_Gas_Supply_Tap_Plan_Details.DWG

N1808

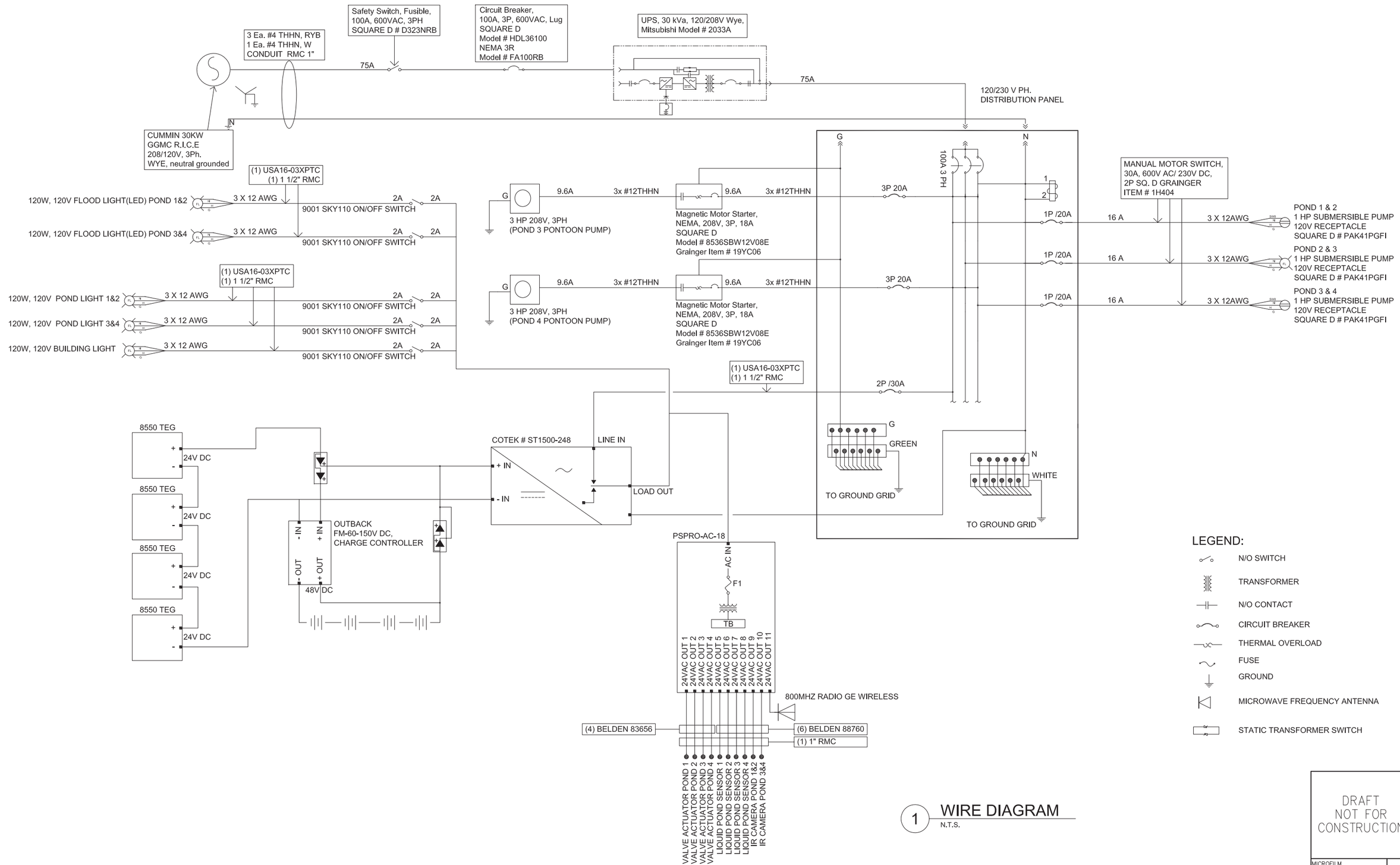

1 WIRE DIAGRAM
N.T.S.

DRAFT
NOT FOR
CONSTRUCTION

ALISTO ENGINEERING GROUP
WALNUT CREEK, CALIFORNIA

2737 N. MAIN STREET, SUITE 200, WALNUT CREEK, CALIFORNIA 94597
OFFICE TEL.# (925)279-5000 FAX# (925)279-5001 WWW.ALISTO.COM

NO.	DATE	DESCRIPTION	GM/SPEC	DWN	CHKD	SUPV	APVD BY
1	12/2/14	SUPPLEMENTAL PRE-FINAL (90%) DESIGN		DSA	JLA	SS	
0	9/8/14	PRE-FINAL (90%) DESIGN		DSA	RB	RB	

REVISIONS

APPROVED BY
SO
SUPV RB
DSGN MK
DWN DSA
CHKD RB
OK
DATE 9/8/14
SCALES NTS

TOPOCK GROUNDWATER REMEDIATION PROJECT
COMPRESSOR STATION PONDS UPGRADES

ELECTRICAL SINGLE LINE DIAGRAM

GAS TRANSMISSION & DISTRIBUTION
PACIFIC GAS AND ELECTRIC COMPANY
SAN FRANCISCO, CALIFORNIA

MICROFILM
BILL OF MATL
DWG LIST
SUPSDS
SUPSD BY
SHEET NO.
E-09-02
REV 1

FILENAME: E-09-02_Elec_Single_Line_Diagram.DWG
PLOT DATE: 08-15-2014
PLOT TIME: 11:45

N1808

POTABLE WATER AND SEWER SCHEMATIC

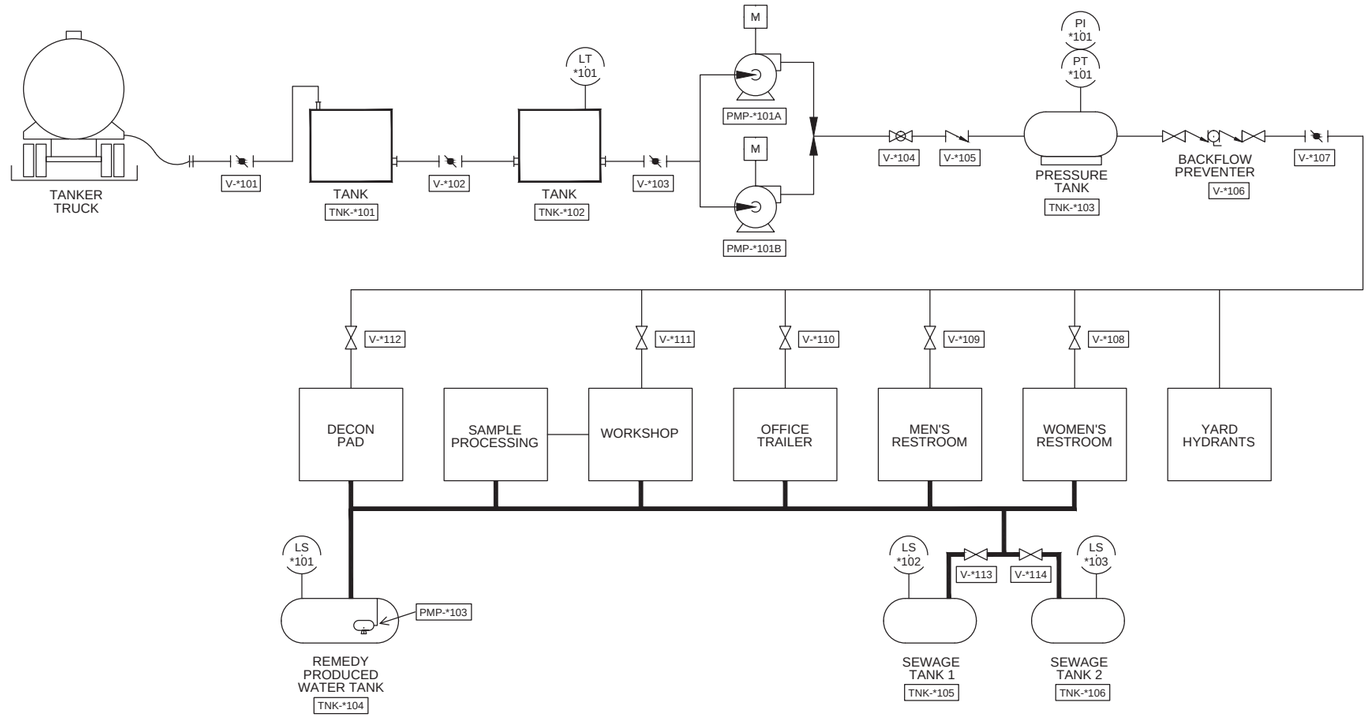

LEGEND

- WATER LINE
- SEWER LINE
- BUTTERFLY VALVE
- GLOBE VALVE
- CHECK VALVE
- GATE VALVE

FS	FLOW SWITCH
LS	LEVEL SWITCH
LT	LEVEL TRANSMITTER
PI	PRESSURE INDICATOR
PT	PRESSURE TRANSMITTER
PMP	PUMP
TNK	TANK
V	VALVE
M	MOTOR

- PUMP
- SUBMERSIBLE PUMP

NOTE
1. TAG NUMBER "*" IS A PLACEHOLDER FOR THE LOCATION ID. SEE DESCRIPTION BELOW FOR FULL LOCATION ID NUMBER.

TYPE LOCATION ID NUMBER
TNK-PM-XXX

FIREWATER SCHEMATIC

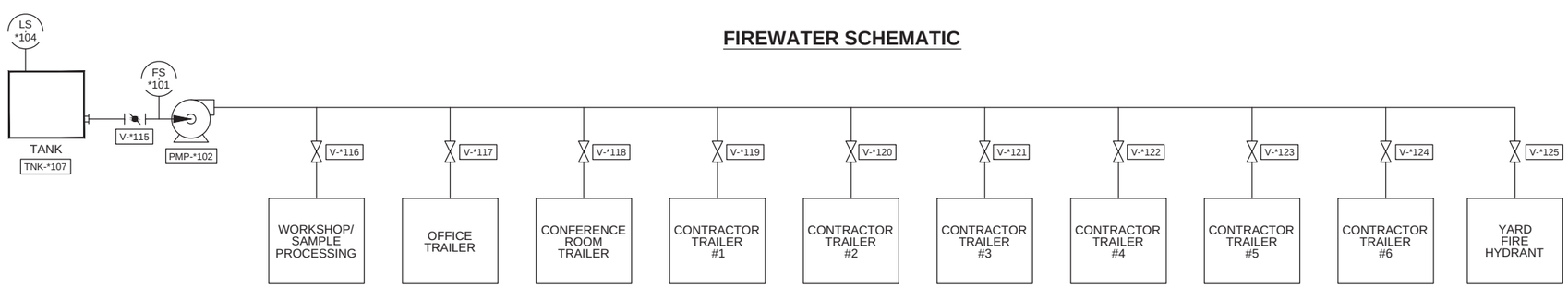

- DRAFT -
NOT FOR CONSTRUCTION

ETIC ENGINEERING

ARCADIS

NO.	DATE	DESCRIPTION	GM/SPEC	DWN	CHKD	SUPV	APVD	BY
0	2/2/15	SUPPLEMENTAL PRE-FINAL (90%) DESIGN		AJW	KTA	JPB	JEF	

REVISIONS

APPROVED BY: JEF

SO	
SUPV	JPB
DSGN	KTA
DWN	AJW
CHKD	JPB
OK	JEF
DATE	2/2/15
SCALES	NONE

TOPOCK GROUNDWATER REMEDIATION PROJECT

CONSTRUCTION HEADQUARTERS
PROCESS FLOW DIAGRAM

GAS TRANSMISSION & DISTRIBUTION
PACIFIC GAS AND ELECTRIC COMPANY
SAN FRANCISCO, CALIFORNIA

MICROFILM
BILL OF MATL
DWG LIST
SUPSDS
SUPSD BY
SHEET NO. of SHEETS
G-15-01
REV 1

N1808

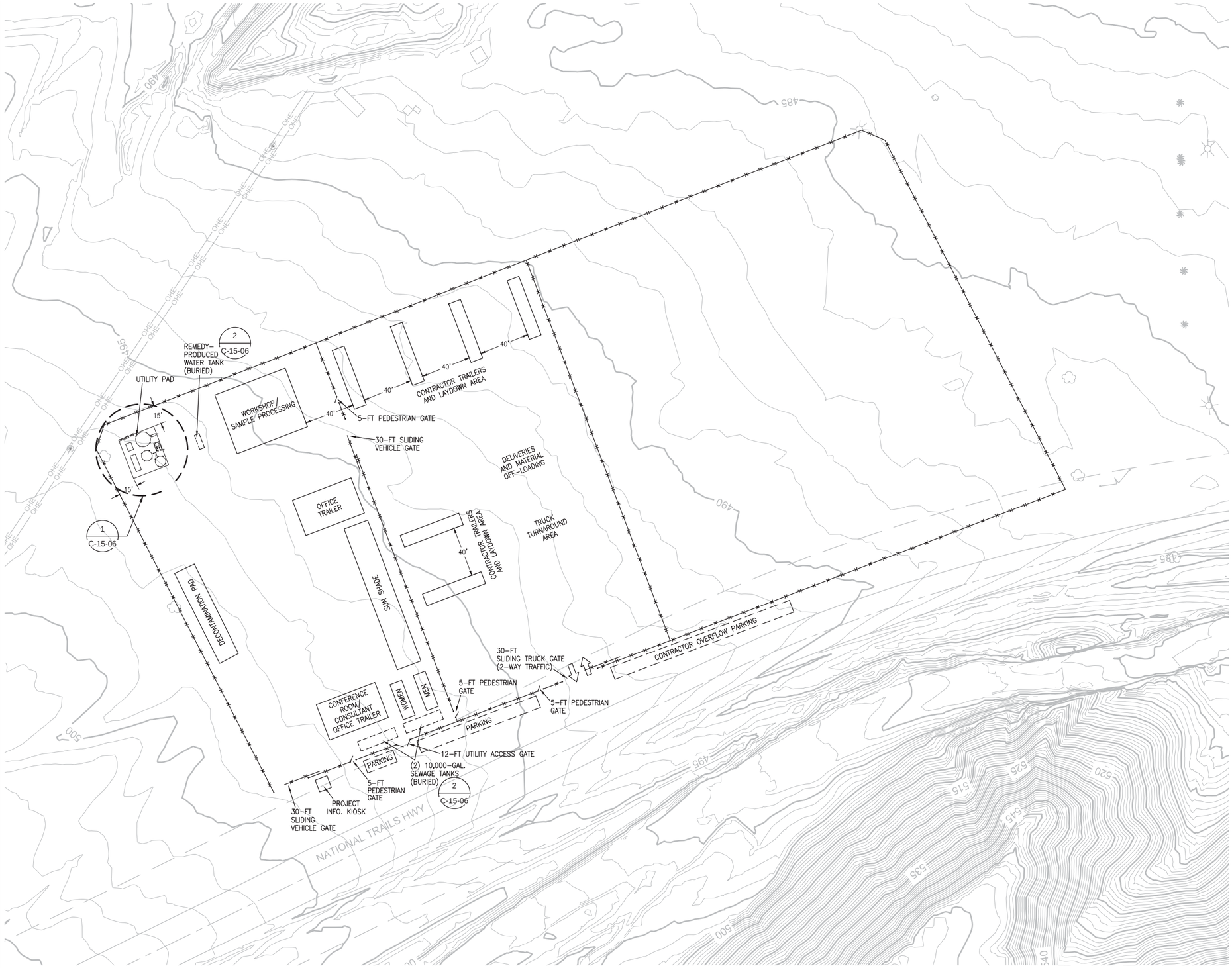

LEGEND:

FENCE LINE

NOTES:

1. PARKING SURFACE WILL BE GRAVEL DURING INITIAL CONSTRUCTION, BUT MAY BE PAVED WITH ASPHALT IN THE FUTURE.
2. CONFIGURATION AND COMPOSITION OF THE REMEDY SUPPORT AREA MAY CHANGE OVER THE LIFE OF THE REMEDY. EXPECTED CONFIGURATION DURING CONSTRUCTION IS DEPICTED HERE.
3. FINAL LAYOUT OF TEMPORARY CONSTRUCTION AND LAYDOWN AREAS TO BE DETERMINED BY CONTRACTOR. REPRESENTATIVE USE OF THE AREA IS DEPICTED HERE.

N

0 40' 80' 120'

SCALE: 1"=40'

- DRAFT -
NOT FOR CONSTRUCTION

ETIC ENGINEERING

ARCADIS

NO.	DATE	DESCRIPTION	GM/SPEC	DWN	CHKD	SUPV	APVD BY
0	2/2/15	SUPPLEMENTAL PRE-FINAL (90%) DESIGN		AJW	MSL	JPB	JEF

REVISIONS

APPROVED BY: JEF

SO	
SUPV	JPB
DSGN	MSL
DWN	AJW
CHKD	JPB
OK	JEF
DATE	2/2/15
SCALES	1" = 40'

TOPOCK GROUNDWATER REMEDIATION PROJECT

CONSTRUCTION HEADQUARTERS SITE PLAN

GAS TRANSMISSION & DISTRIBUTION

PACIFIC GAS AND ELECTRIC COMPANY
SAN FRANCISCO, CALIFORNIA

MICROFILM
BILL OF MATL
DWG LIST
SUPSDS
SUPSD BY
SHEET NO. of SHEETS

C-15-01

REV 1

N1808

LEGEND:

- FENCE LINE
- ELECTRICAL AND TELECOMMUNICATIONS CONNECTION
- FIRE PROTECTION WATER AND SEWER CONNECTION
- WATER CONNECTION

NOTES:

1. CONFIGURATION AND COMPOSITION OF THE REMEDY SUPPORT AREA MAY CHANGE OVER THE LIFE OF THE REMEDY. EXPECTED CONFIGURATION DURING CONSTRUCTION IS DEPICTED HERE.
2. FINAL LAYOUT OF TEMPORARY CONSTRUCTION AND LAYDOWN AREAS TO BE DETERMINED BY CONTRACTOR. REPRESENTATIVE USE OF THE AREA IS DEPICTED HERE.

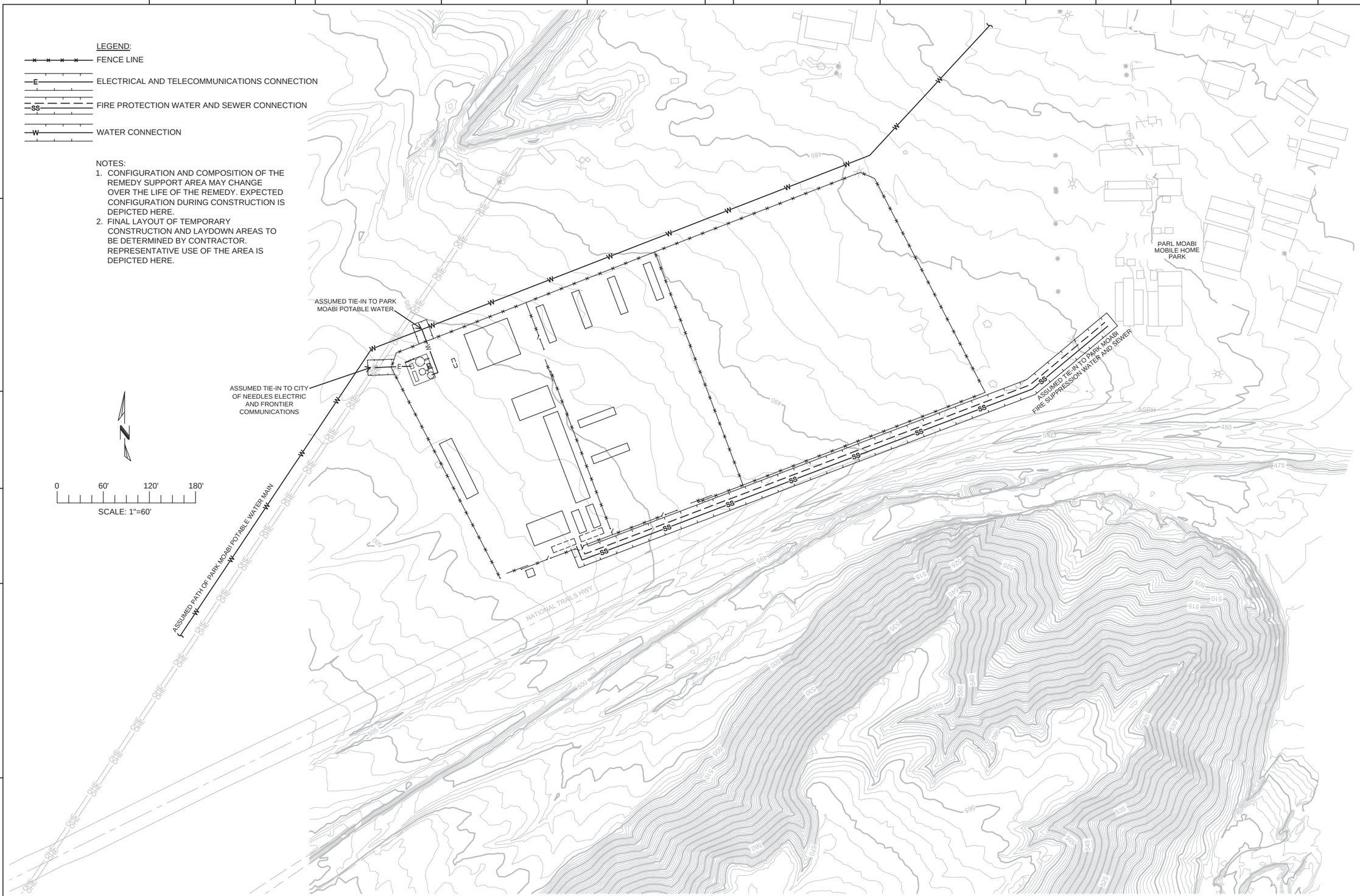

- DRAFT -
NOT FOR CONSTRUCTION

ETIC ENGINEERING

ARCADIS

NO.	DATE	DESCRIPTION	GM/SPEC	DWN	CHKD	SUPV	APVD BY
0	2/2/15	SUPPLEMENTAL PRE-FINAL (90%) DESIGN		AJW	MSL	JPB	JEF

REVISIONS

APPROVED BY: JEF

SO	
SUPV	JPB
DSGN	MSL
DWN	AJW
CHKD	JPB
OK	JEF
DATE	2/2/15
SCALES	1" = 60'

TOPOCK GROUNDWATER REMEDIATION PROJECT

CONSTRUCTION HEADQUARTERS UTILITY CONNECTIONS

GAS TRANSMISSION & DISTRIBUTION
PACIFIC GAS AND ELECTRIC COMPANY
SAN FRANCISCO, CALIFORNIA

MICROFILM
BILL OF MATL
DWG LIST
SUPSDS
SUPSD BY
SHEET NO. of SHEETS: C-15-02
REV: 1

N1808

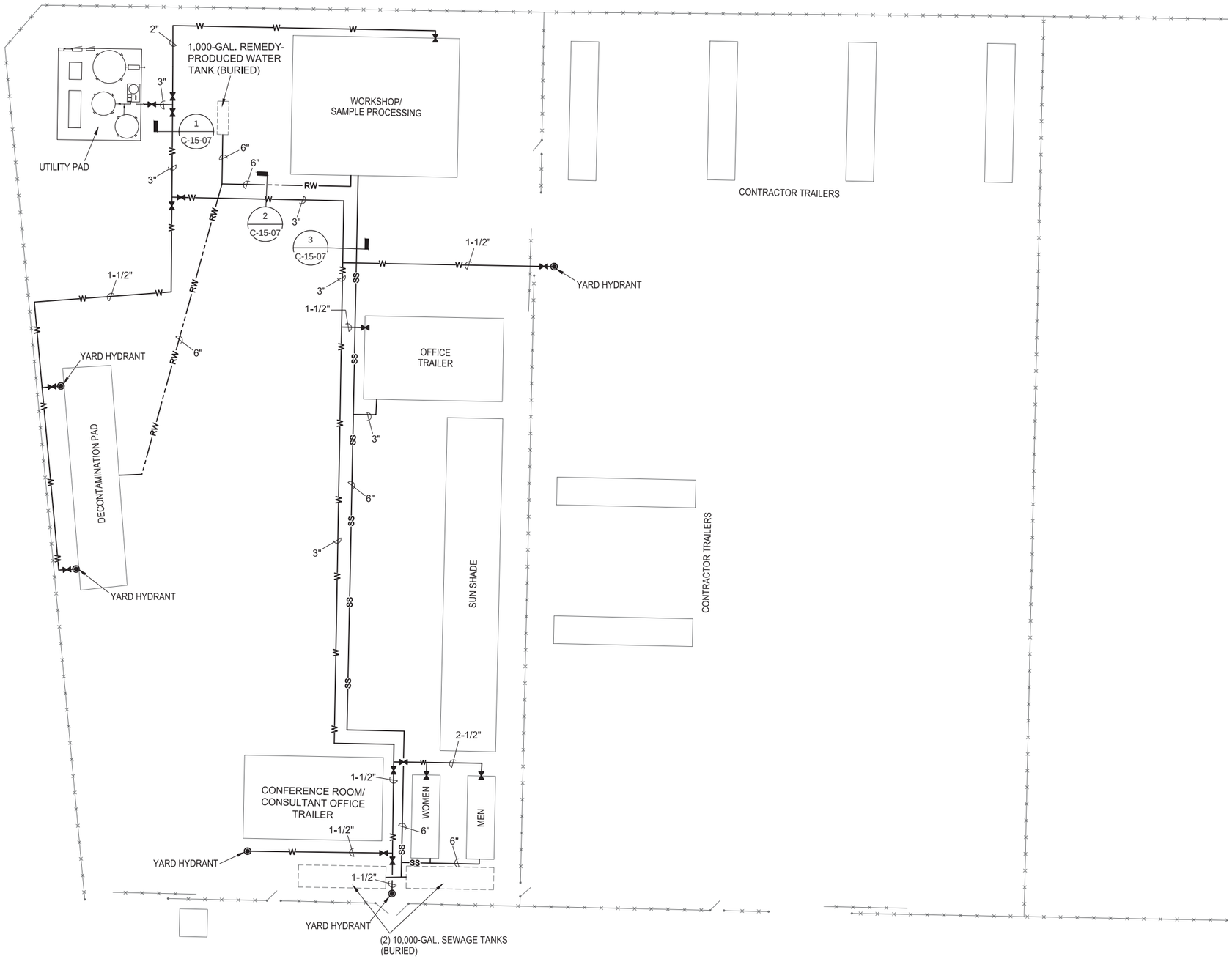

LEGEND:

- —W— WATER LINE
- —RW— REMEDY PRODUCED WATER LINE
- —SS— SANITARY SEWER LINE
- YARD HYDRANT
- BURIED GATE VALVE

NOTES:

1. ELECTRICAL CONDUIT SHOWN ON SHEET E-15-01.
2. FIRE SUPPRESSION WATER LINE SHOWN ON SHEET F-15-01.
3. SECURITY CONDUIT SHOWN ON SHEET C-15-04.
4. ALL GRAVITY SEWER AND REMEDY PRODUCED WATER PIPING TO BE INSTALLED AT A 1% SLOPE.
5. CONFIGURATION AND COMPOSITION OF THE REMEDY SUPPORT AREA MAY CHANGE OVER THE LIFE OF THE REMEDY. EXPECTED CONFIGURATION DURING CONSTRUCTION IS DEPICTED HERE.
6. FINAL LAYOUT OF TEMPORARY CONSTRUCTION AND LAYDOWN AREAS TO BE DETERMINED BY CONTRACTOR. REPRESENTATIVE USE OF THE AREA IS DEPICTED HERE.

0 20' 40' 60'

SCALE: 1"=20'

- DRAFT - NOT FOR CONSTRUCTION

ETIC ENGINEERING

ARCADIS

NO.	DATE	DESCRIPTION	GM/SPEC	DWN	CHKD	SUPV	APVD BY
0	2/2/15	SUPPLEMENTAL PRE-FINAL (90%) DESIGN		AJW	MSL	JPB	JEF

REVISIONS

APPROVED BY: JEF

SO	
SUPV	JPB
DSGN	MSL
DWN	AJW
CHKD	JPB
OK	JEF
DATE	2/2/15
SCALES	1" = 40'

TOPOCK GROUNDWATER REMEDIATION PROJECT

CONSTRUCTION HEADQUARTERS PIPING PLAN

GAS TRANSMISSION & DISTRIBUTION

PACIFIC GAS AND ELECTRIC COMPANY
SAN FRANCISCO, CALIFORNIA

MICROFILM
BILL OF MATL
DWG LIST
SUPSDS
SUPSD BY
SHEET NO. of SHEETS
C-15-03
REV 1

N1808

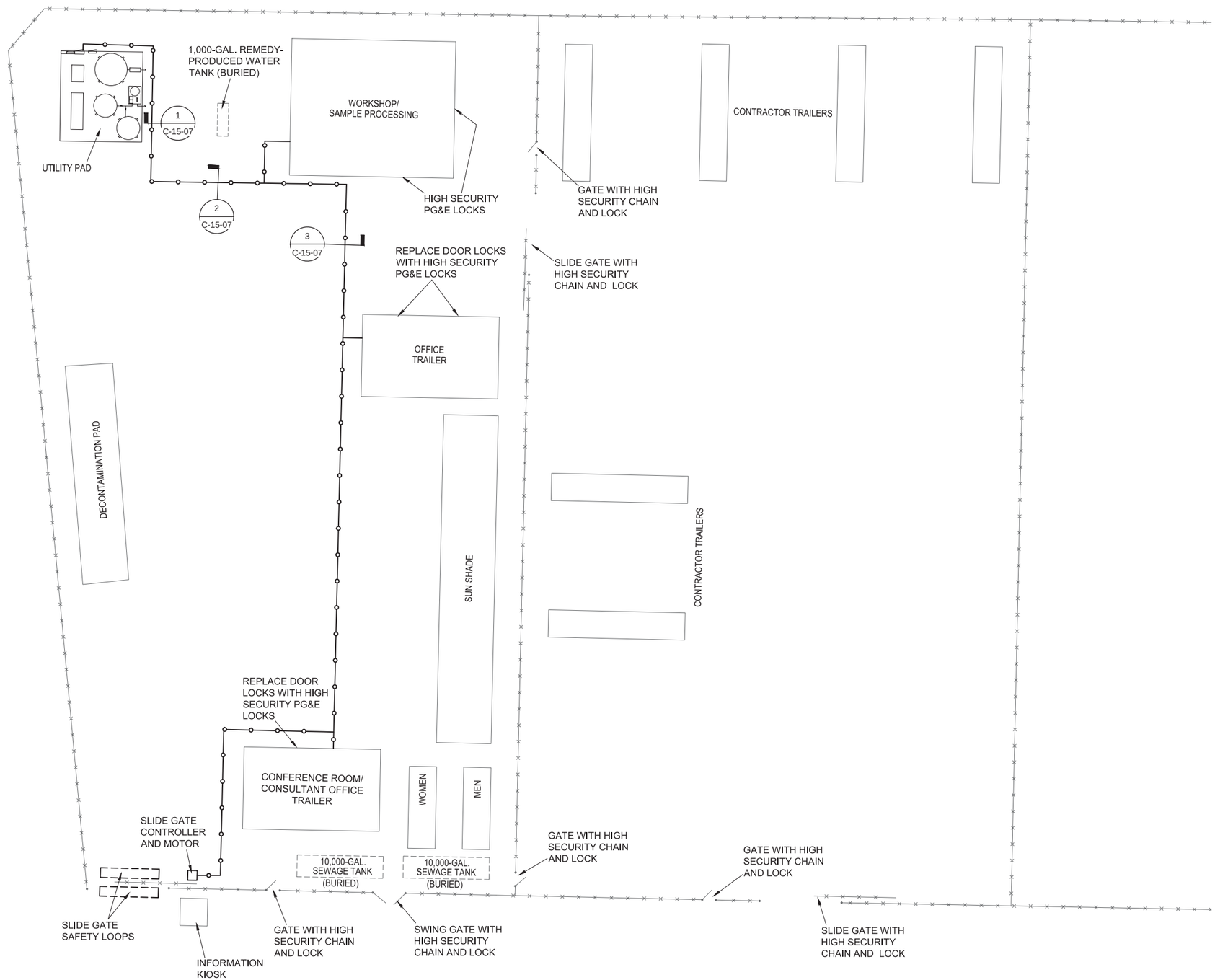

LEGEND:

SECURITY CONDUIT

NOTES:

1. CONFIGURATION AND COMPOSITION OF THE REMEDY SUPPORT AREA MAY CHANGE OVER THE LIFE OF THE REMEDY. EXPECTED CONFIGURATION DURING CONSTRUCTION IS DEPICTED HERE.
2. FINAL LAYOUT OF TEMPORARY CONSTRUCTION AND LAYDOWN AREAS TO BE DETERMINED BY CONTRACTOR. REPRESENTATIVE USE OF THE AREA IS DEPICTED HERE.

- DRAFT - NOT FOR CONSTRUCTION

ETIC ENGINEERING

ARCADIS

NO.	DATE	DESCRIPTION	GM/SPEC	DWN	CHKD	SUPV	APVD BY
0	2/2/15	SUPPLEMENTAL PRE-FINAL (90%) DESIGN		AJW	JMS	JPB	JEF

REVISIONS

APPROVED BY: JEF

SO	
SUPV	JPB
DSGN	JMS
DWN	AJW
CHKD	JPB
OK	JEF
DATE	2/2/15
SCALES	1" = 20'

TOPOCK GROUNDWATER REMEDIATION PROJECT

CONSTRUCTION HEADQUARTERS SECURITY PLAN

GAS TRANSMISSION & DISTRIBUTION

PACIFIC GAS AND ELECTRIC COMPANY

SAN FRANCISCO, CALIFORNIA

MICROFILM

BILL OF MATL

DWG LIST

SUPSDS

SUPSD BY

SHEET NO. of SHEETS

C-15-04

REV 1

N1808

CONSTRUCTION HEADQUARTERS

NATIONAL TRAILS HWY

FENCE

SCREENING REJECT PILE

SCREENING/ PROCESSING AREA

TRUCK PATH (25-FT WIDE)

SCREENED MATERIAL STORAGE

GENERATED SOIL STAGING AREA

SCREENED MATERIAL STORAGE

COVERED AREA

(N) PP

NEW OVERHEAD LINE FOR REMEDY

PP (N)

(E) PP

2" HDPE CONDUIT

ELEVATED WATER TANK

POWER DISTRIBUTION AND LIGHTING PANEL

GATE WITH HIGH SECURITY PG&E LOCK

TRUCK TRACKING PAD (PROVISIONAL)

APPROXIMATE TRUCK PATH

APPROXIMATE TRUCK WAITING AREA

NATIONAL TRAILS HIGHWAY

BNSF RAILROAD

APPROXIMATE TRUCK WAITING AREA

APPROXIMATE TRUCK PATH

(E) PP

NEW OVERHEAD LINE FOR REMEDY

(N) PP

POWER DISTRIBUTION AND LIGHTING PANEL

8' X 20' STORAGE CONTAINERS, TYP.

TRUCK PATH (25-FT WIDE)

5' TYP.

50' MIN.

ELEVATED WATER TANK

GATES WITH HIGH SECURITY PG&E LOCK

LEGEND:

(E) PP ○ EXISTING POWER POLE

(N) PP ● NEW POWER POLE

NOTES:

1. FOR FENCING AND GRAVEL ROAD DETAILS, SEE SHEETS C-00-05, C-00-06, AND C-00-07.
2. FINAL LAYOUT OF TEMPORARY CONSTRUCTION AND LAYDOWN AREAS TO BE DETERMINED BY CONTRACTOR. REPRESENTATIVE USE OF THE AREA IS DEPICTED HERE.

0 40' 80' 120'

SCALE: 1"=40'

- DRAFT -
NOT FOR CONSTRUCTION

ETIC ENGINEERING

ARCADIS

NO.	DATE	DESCRIPTION	GM/SPEC	DWN	CHKD	SUPV	APVD BY
0	2/2/15	SUPPLEMENTAL PRE-FINAL (90%) DESIGN		AJW	MSL	JPB	JEF

REVISIONS

APPROVED BY: JEF

SO	
SUPV	JPB
DSGN	MSL
DWN	AJW
CHKD	JPB
OK	JEF
DATE	2/2/15
SCALES	1" = 40'

TOPOCK GROUNDWATER REMEDIATION PROJECT

PARK MOABI SOIL STAGING AND STORAGE SITE PLAN

GAS TRANSMISSION & DISTRIBUTION

PACIFIC GAS AND ELECTRIC COMPANY
SAN FRANCISCO, CALIFORNIA

MICROFILM

BILL OF MATL

DWG LIST

SUPSDS

SUPSD BY

SHEET NO. of SHEETS

C-15-05

REV 1

N1808

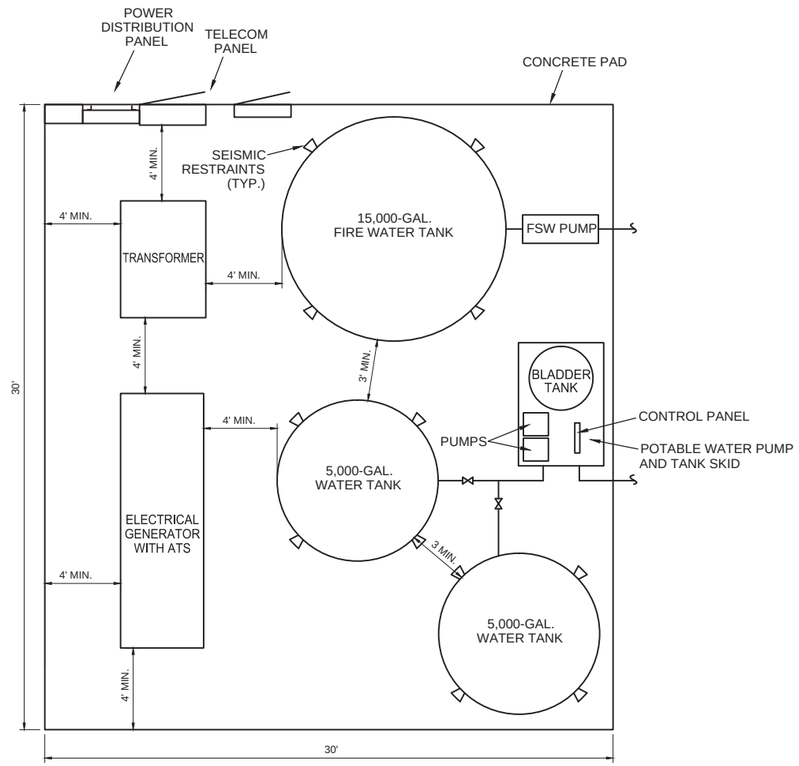

1 UTILITY PAD LAYOUT
1/4"=1'-0"
C-15-01

NOTES:
ATS - AUTOMATIC TRANSFER SWITCH
FSW - FIRE SUPPRESSION WATER

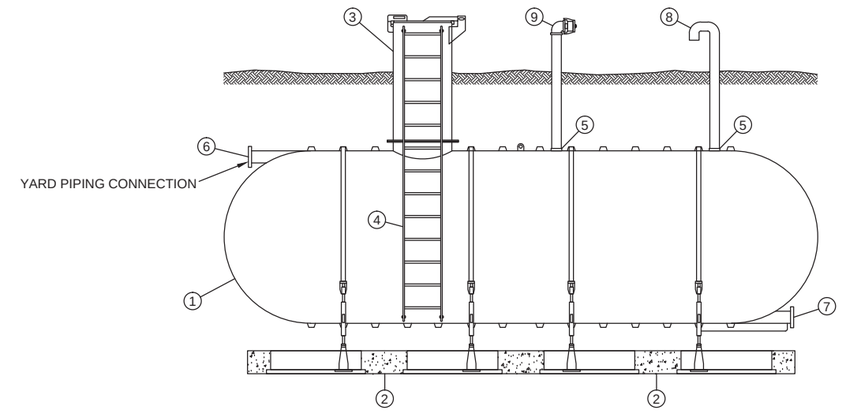

NO.	DESCRIPTION
1	FRP TANK
2	PRECAST DEADMAN SYSTEM W/ HOLD DOWN STRAP AND TURNBUCKLE TOP (UV PROTECTED)
3	30" MANWAY EXTENSION ACCESS WITH HINGED & LOCKABLE TOP (UV PROTECTED)
4	NSF APPROVED FRP LADDER
5	4" NPT SERVICE FITTING
6	6" NSF APPROVED TANGENTIAL NOZZLE
7	6" NSF APPROVED TANGENTIAL FULL BOTTOM DRAIN NOZZLE
8	4" VENT PIPE WITH GOOSENECK AND BUG SCREEN
9	4" AUXILARY FILL W/CAM LOCK CONNECTION

NOTES:
1. TANKS WILL BE BURIED WITH A MINIMUM OF 12" OF BACKFILL ABOVE AND BENEATH THE TANK.
2. TANK SURFACE MUST BE BLOCKED FROM TRAFFIC CROSSING.
3. TANKS WILL BE ANCHORED USING A VENDOR-SUPPLIED ANCHORING SYSTEM.
4. CONTACTOR TO CONFIRM MANUFACTURER'S TANK INSTALLATION DETAILS.

2 BURIED STORAGE TANK
NO SCALE
C-15-01

TANK ID	TANK DIAMETER	TANK LENGTH
1,000-GAL. REMEDY PRODUCED WATER TANK	4'	11'-7$\frac{1}{2}$"
10,000-GAL. SEWAGE TANK	8'	31'-6$\frac{1}{2}$"

- DRAFT -
NOT FOR
CONSTRUCTION

ETIC ENGINEERING

ARCADIS

NO.	DATE	DESCRIPTION	GM/SPEC	DWN	CHKD	SUPV	APVD	BY
0	2/2/15	SUPPLEMENTAL PRE-FINAL (90%) DESIGN		AJW	MSL	JPB	JEF	

REVISIONS

APPROVED BY: JEF

SO	
SUPV	JPB
DSGN	MSL
DWN	AJW
CHKD	JPB
OK	JEF
DATE	2/2/15
SCALES	NONE

TOPOCK GROUNDWATER REMEDIATION PROJECT
CONSTRUCTION HEADQUARTERS
CIVIL DETAILS
GAS TRANSMISSION & DISTRIBUTION
PACIFIC GAS AND ELECTRIC COMPANY
SAN FRANCISCO, CALIFORNIA

MICROFILM
BILL OF MATL
DWG LIST
SUPSDS
SUPSD BY
SHEET NO. of SHEETS
C-15-06
REV 1

N1808

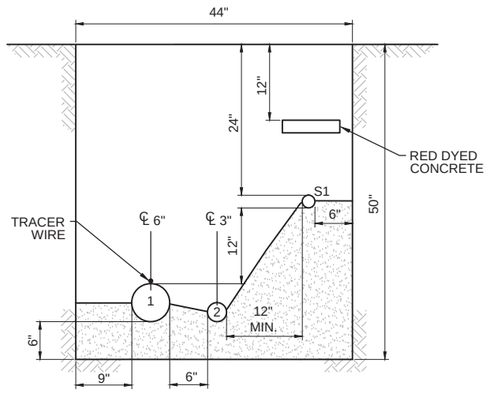

1 SECTION
1"=1'-0"
C-15-03
C-15-04
E-15-01
F-15-01

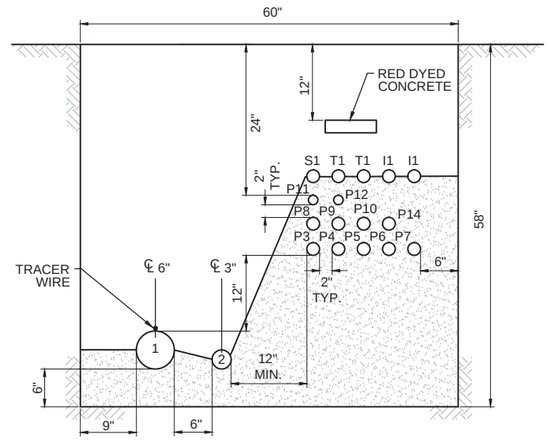

2 SECTION
1"=1'-0"
C-15-03
C-15-04
E-15-01
F-15-01

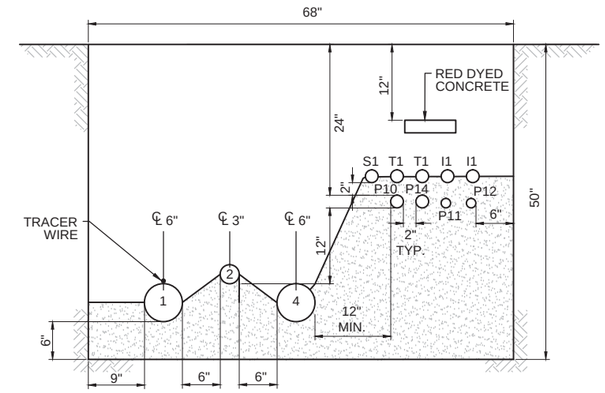

3 SECTION
1"=1'-0"
C-15-03
C-15-04
E-15-01
F-15-01

PIPE ID	SERVICE
1	6" FIRE PROTECTION WATER
2	3" WATER LINE
3	6" REMEDY PRODUCED WATER
4	6" SANITARY SEWER
T1	2" TELECOMMUNICATIONS CONDUIT
I1	2" INSTRUMENTATION CONDUIT
S1	2" SECURITY CONDUIT

NOTES:
1. SEE SHEET E-15-03 FOR CONSTRUCTION HEADQUARTERS YARD AND CONDUIT SCHEDULE.

- DRAFT -
NOT FOR
CONSTRUCTION

ETIC ENGINEERING

ARCADIS

NO.	DATE	DESCRIPTION	GM/SPEC	DWN	CHKD	SUPV	APVD BY
0	2/2/15	SUPPLEMENTAL PRE-FINAL (90%) DESIGN		AJW	MSL	JPB	JEF

REVISIONS

APPROVED BY: JEF

SO
SUPV JPB
DSGN MSL
DWN AJW
CHKD JPB
OK JEF
DATE 2/2/15
SCALES NONE

TOPOCK GROUNDWATER REMEDIATION PROJECT
CONSTRUCTION HEADQUARTERS
TRENCH SECTIONS
GAS TRANSMISSION & DISTRIBUTION
PACIFIC GAS AND ELECTRIC COMPANY
SAN FRANCISCO, CALIFORNIA

MICROFILM
BILL OF MATL
DWG LIST
SUPSDS
SUPSD BY
SHEET NO. of SHEETS
C-15-07
REV 1

N1808

SYMBOLS:

#	NUMBER
#	FIRE RESISTANCE RATING IN HOURS
●	FIRE EXTINGUISHER LOCATIONS
E	ILLUMINATED EXIT SIGN LOCATION
###	ROOM NUMBER
600-1a	DOOR NUMBER
E/S	EMERGENCY EYEWASH AND SHOWER
	CONCRETE MASONRY
	CONCRETE
	EXISTING CONCRETE MASONRY
	EXISTING CONCRETE
	GROUT
	STEEL
	EARTH
	RIGID INSULATION
	GRATING

BUILDING CODE NOTES:

ITEM	REMARKS
DESIGN CODES	2013 CALIFORNIA BUILDING CODE,
	2012 INTERNATIONAL BUILDING CODE
	2010 ASCE-7
BUILDING OCCUPANCY CLASSIFICATION	GROUP F-2
TYPE OF CONSTRUCTION	II- B
BUILDING AREA	3000 SF
BUILDING HEIGHT	1 STORY
FIRE SUPPRESSION SYSTEM	NONE

A. GENERAL NOTES:

1. CONTRACTOR SHALL FIELD VERIFY ALL DIMENSIONS AND EXISTING CONDITIONS.

2. ALL FOUNDATIONS AND SLABS SHALL BEAR ON A 6 INCH MINIMUM THICKNESS OF AGGREGATE BASE MATERIAL. FOUNDATION DESIGN IS BASED ON 2,000 PSF ALLOWABLE BEARING PRESSURE IN CONFORMANCE WITH CBC TABLE 1806.2 FOR CLASSIFICATION(S) SW, SP, SM, SC, GM, AND/OR GC. A LICENSED GEOTECHNICAL ENGINEER SHALL PROVIDE SUBGRADE COMPACTION AND PREPARATION REQUIREMENTS, AND SHALL INSPECT THE EXCAVATIONS AND CONFIRM THAT 2,000 PSF BEARING IS ALLOWED FOR THE FOUNDATIONS. WHEN ENGINEERED FILL IS REQUIRED BY THE GEOTECHNICAL ENGINEER, IT SHALL BE TESTED AND INSPECTED BY THE GEOTECHNICAL ENGINEER.

3. STRUCTURAL OBSERVATIONS OF CONSTRUCTION ARE RECOMMENDED (PER CBC SECTION 1702), SO AS TO OBSERVE THE PROGRESS AND QUALITY OF THE CONTRACTOR'S WORK AND TO DETERMINE IF THE WORK IS PROCEEDING IN GENERAL ACCORDANCE WITH THE CONSTRUCTION DOCUMENTS.

4. ANCHOR BOLTS SHALL BE ASTM F1554 GRADE 36 THREADED RODS WITH HEAVY HEX NUTS AND WASHERS.

5. NON-SHRINK GROUT SHALL BE NS GROUT BY EUCLID CHEMICAL COMPANY, OR EQUAL.

6. LIVE LOADING:
   GRADE SLAB - 3 TON FORKLIFT (RATED CAPACITY) AND HS-20 TRAFFIC LOADS (NOT ACTING SIMULTANEOUSLY)
   ROOF - 20 PSF
   INTERIOR ROOM CEILINGS - 50 PSF

7. METAL BUILDING DESIGN CRITERIA:
   THE METAL BUILDING MANUFACTURER SHALL DESIGN THE BUILDING FOR THE FOLLOWING LOADS, BASED ON THE 2013 CALIFORNIA BUILDING CODE AND ASCE 7-10:

   ROOF COLLATERAL LOAD - 5 PSF.

   MAX ROOF DEAD LOAD - 11.5 PSF. * (NOT INCLUDING ROOF COLLATERAL LOADS)

   MIN ROOF DEAD LOAD - 4 PSF.

   * MAXIMUM ROOF DEAD LOAD ASSUMES 5 PSF MAXIMUM DEAD LOAD FROM SOLAR PANEL & SOLAR PANEL SUPPORT FRAMING/HARDWARE/ ATTACHMENTS TO ROOF

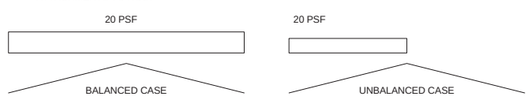

ROOF LIVE LOADING

WIND LOADING:
BASIC WIND SPEED (3 SECOND GUST) V=110 MPH - ULTIMATE, OR MINIMUM NET WIND PRESSURE, Pnet = 20 PSF WHICHEVER IS GREATER
WIND IMPORTANCE FACTOR - Iw = 1.0
RISK CATEGORY II.
WIND EXPOSURE C.
ENCLOSURE - PARTIALLY ENCLOSED.
INTERNAL PRESSURE COEFFICIENT - ±0.55.
ALL COMPONENTS AND CLADDING SHALL BE DESIGNED FOR THE CONDITIONS OF INTERNAL AND EXTERNAL PRESSURES.

SEISMIC CRITERIA:
SEISMIC IMPORTANCE FACTOR - Ie=1.0.
RISK CATEGORY II.
DESIGN CATEGORY - C
SITE CLASS - D
MAPPED SPECTRAL RESPONSE ACCELERATIONS - Ss=0.230, S1=0.120.
SPECTRAL RESPONSE COEFFICIENTS - Sds=0.245, Sd1=0.188.
SEISMIC FORCE RESISTING SYSTEM:
ORDINARY STEEL MOMENT FRAMES
Cs=7.0%, R=3.5, BASE SHEAR: V=10 KIPS (TO BE VERIFIED BY METAL BUILDING MFR)
ANALYSIS PROCEDURE - EQUIVALENT LATERAL FORCE.

FOUNDATIONS:
THE INTERIOR BUILDING FRAME (ALONG COLUMN LINE 2 AND 3) COLUMN FOUNDATIONS HAVE BEEN DESIGNED FOR THE FOLLOWING MAXIMUM SERVICE LOAD REACTIONS. THE METAL BUILDING MANUFACTURER SHALL PROPORTION THE BUILDING SUCH THAT THE ACTUAL REACTIONS DO NOT EXCEED THOSE LISTED. IF THE FINAL REACTIONS EXCEED THOSE LISTED, THE CONTRACTOR SHALL BEAR THE COST OF RE-DESIGNING THE FOUNDATIONS TO THE SATISFACTION OF THE ENGINEER, AT NO ADDITIONAL COST TO THE OWNER.

30.2 KIPS DOWNWARD
6.1 KIPS EAST-WEST SHEAR
13.8 KIPS NORTH-SOUTH SHEAR
5.2 KIPS NET UPLIFT
* THE EXTERIOR BUILDING FRAME (ALONG COLUMN LINES 1 AND 4) COLUMN FOUNDATIONS HAVE BEEN DESIGNED FOR 60% DOWNWARD AND UPLIFT REACTIONS LISTED ABOVE FOR INTERIOR BUILDING FRAME COLUMN FOUNDATIONS.

B. FOUNDATION NOTES:

1. IF THE BUILDING OFFICIAL OR GEOTECHNICAL ENGINEER DETERMINES THAT EXPANSIVE SOILS OR OTHER GEOLOGIC ISSUES OF CONCERN MAY BE PRESENT, THEN HE/SHE MAY REQUIRE THAT SPECIAL PROVISIONS BE MADE TO THE FOUNDATION DESIGN TO SAFEGUARD AGAINST DAMAGE DUE TO THE EXPANSIVENESS OR OTHER GEOLOGIC ISSUES. IF THIS BECOMES THE SITUATION THEN ALL FOUNDATION CONSTRUCTION MUST BE HALTED AND THE GEOTECHNICAL ENGINEER SHALL PROVIDE A GEOTECHNICAL REPORT WITH RECOMMENDATIONS IN CONSIDERATION OF THE CONDITIONS.

2. REFER TO THE GENERAL NOTES AND STRUCTURAL SPECIFICATIONS FOR ADDTIONAL REQUIREMENTS.

3. AGGREGATE BASE MATERIAL: TO BE CRUSHED GRAVEL MEETING THE FOLLOWING GRADATION AND COMPACTED TO 95% MAXIMUM DRY DENSITY OF MODIFIED PROCTOR.

SIEVE SIZE	TOTAL PERCENT PASSING
2 INCH	100
1 INCH	70 TO 100
3/4 INCH	50 TO 90
NO. 4	30 TO 60
NO. 30	9 TO 33
NO. 200	0 TO 6

C. CONCRETE NOTES:

1. DETAILS, WORKMANSHIP, AND GENERAL PROCEDURE SHALL CONFORM TO ACI 318, ACI 315, ACI 301, ACI SP66 DETAILING MANUAL, AND CRSI MANUAL OF STANDARD PRACTICE, UNLESS OTHERWISE NOTED.

2. MINIMUM COMPRESSIVE STRENGTH AT 28 DAYS - 4,500 PSI.

3. BAR REINFORCING - ASTM A615 GRADE 60.

4. WELDED WIRE FABRIC REINFORCING - ASTM A185.

5. ALL LAP SPLICES SHALL BE CLASS B OR AS SHOWN.

6. CONCRETE COVER OVER REINFORCING:
   3" FOR CONCRETE CAST AGAINST EARTH.
   2" OTHERWISE.
   SLABS ON GRADE - AS SHOWN.

7. PLACE, SUPPORT AND SECURE REINFORCEMENT AGAINST DISPLACEMENT. DO NOT DEVIATE FROM REQUIRED POSITION.

8. ELASTOMERIC SEALANT FOR JOINTS SHALL BE SIKAFLEX -2C SL OR EQUAL.

9. PREFORMED PLASTIC ADHESIVE WATERSTOP (PPAWS FR)
   SINGLE COMPONENT SELF-SEALING PLASTIC ADHESIVE TYPE EXTRUDED ROPE FORM BETWEEN TWO PROTECTIVE SILICONE TREATED PAPERS, 1/2" X 1-1/8" SQUARE CROSS SECTION. 1 INCH LAP SPLICE FURNISH WITH PRIMER HENRY COMPANY PRODUCTS SF312-SYNKO-FLEX WATERSTOP FR OR AS APPROVED.

D. METAL DECK (FOR INTERIOR ROOM CEILING) NOTES:

TYPE	DEPTH (IN)	PANEL WIDTH (IN)	DESIGN THICKNESS (IN)	MIN. YIELD STREIGNTH Fy (KSI)	MIN. (+) S (IN3/FT)	MIN. (+) I (IN4/FT)	MIN. DIAPHRAGM SHEAR CAPACITY (LBS/FT)	FINISH
ROOF DECK	1-1/2	36	0.0295	33 (ASTM A653)	0.186	0.155	280	GALVANIZED*

* GALVANIZING SHALL CONFORM TO ASTM A924 WITH COATING CLASS OF G90 AS DEFINED IN ASTM A623.

1. DECK UNIT ANCHORAGE TO STEEL SUPPORTING MEMBERS UTILIZING ARC SPOT PUDDLE WELDS OR MECHANICAL FASTENERS BASED ON THE FOLLOWING MIMINUMS:
   A. ARC SPOT WELDS SHALL BE 5/8" MINIMUM VISIBLE DIAMETER OR
   B. #12 TEKS (SELF-DRILLING FASTENERS BY ITW BUILDEX) WITH THE ATTACHMENT PATTERN OF 36/5
2. MINIMUM SIDE LAP ATTACHMENT SHALL BE 4 FASTENERS PER SPAN AND SHALL BE ARC SPOT PUDDLE WELDS OR MECHANICAL FASTENERS:
   A. ARC SPOT PUDDLE WELDS SHALL BE 5/8" MINIMUM VISIBLE DIAMETER OR
   B. #10 TEK SCREW
3. MINIMUM EDGE ATTACHMENT SHALL BE 6" AND SHALL BE 5/8" MINIMUM VISIBLE DIAMETER.
4. DECKING SHALL BE INSTALLED CONTINUOUS OVER A MINIMUM OF 3 SPANS.
5. ALL STRUCTURAL STEEL AND METAL DECK TO BE PRIMED PROPERLY AND FINISH PAINTED PER SPECIFICATION 09 90 00.

E. COLD-FORMED METAL NOTES:

METAL STUDS FOR INTERIOR ROOM CEILING JOISTS:
1. USE SSMA STUD 600S162-54 (50 KSI) STUDS AT 16" C/C FOR CEILING JOISTS.
2. PROVIDE MINIMUM 3-1/2" BEARING AT EACH END ON METAL STUD WALL BELOW.
3. JOISTS MUST BE BRACED AGAINST ROTATION AT ALL SUPPORTS BY TRACK, BLOCKING, OR SILL PLATE.
4. 1 ROW OF CEILING JOIST BRIDGING IS REQUIRED AT MID-SPAN OF JOISTS.
5. ALIGN CEILING JOISTS TO BEAR DIRECTLY ABOVE METAL STUDS IN WALL.
6. FOLLOW SSMA STANDARD GUIDELINES AND REQUIREMENTS FOR CEILING JOIST INSTALLATION, BRACING, AND ANCHORAGE.

METAL STUDS FOR INTERIOR ROOM WALLS:
1. USE SSMA STUD 362S162-43 (33 KSI) STUDS AT 16" C/C FOR WALLS.
2. WEAK AXIS AND TORSIONAL BRIDGING (BRACING) REQUIRED AT 4'-0" C.C SPACING UP HEIGHT OF WALL.
3. DOOR AND WINDOW WALL HEADERS TO BE SIZED BY METAL STUD WALL MANUFACTURER.
4. ALIGN CEILING JOISTS TO BEAR DIRECTLY ABOVE METAL STUDS IN WALL.
5. FOLLOW SSMA STANDARD GUIDELINES AND REQUIREMENTS FOR WALL INSTALLATION, BRACING, AND ANCHORAGE.

- DRAFT -
NOT FOR CONSTRUCTION

ARCADIS

No.	Date	DESCRIPTION	GM/SPEC	DWN	CHKD	SUPV	APVD BY
0	2/2/15	SUPPLEMENTAL PRE-FINAL (90%) DESIGN		CMW	MSL	JB	RAK

REVISIONS

APPROVED BY: SO
SUPV JB
DSGN MSL
DWN CMW
CHKD MSL
OK RAK
DATE 2/2/15
SCALES NONE or AS SHOWN

TOPOCK GROUNDWATER REMEDIATION PROJECT
WORKSHOP BUILDING
GENERAL NOTES
GAS TRANSMISSION & DISTRIBUTION
PACIFIC GAS AND ELECTRIC COMPANY
SAN FRANCISCO, CALIFORNIA

MICROFILM
BILL OF MATL
DWG LIST
SUPSDS
SUPSD BY
SHEET NO. of SHEETS
S-15-01
REV 1

1/16/2015 2:37:25 PM
C:\Users\cwancata\Documents\Topok Workshop Building_Structural_cwancata.rvt

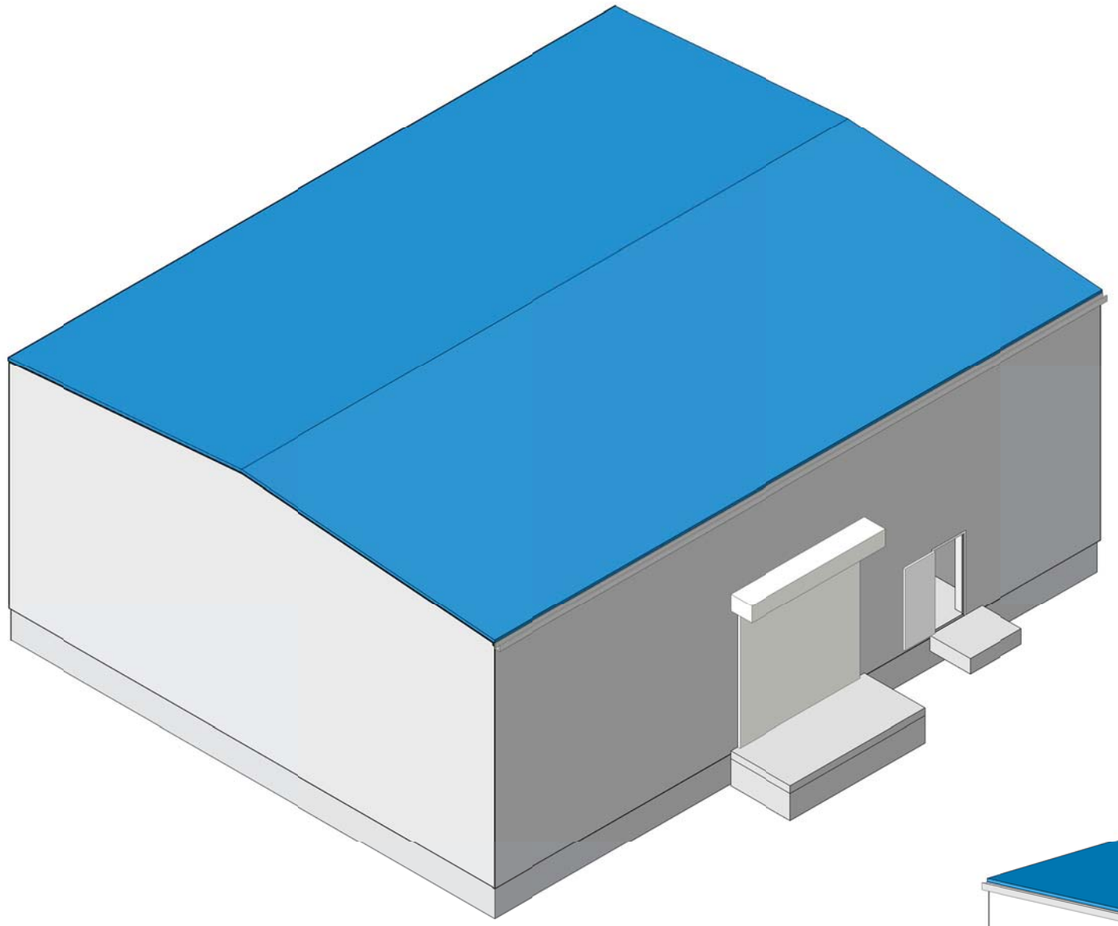

3D VIEW LOOKING NORTHEAST

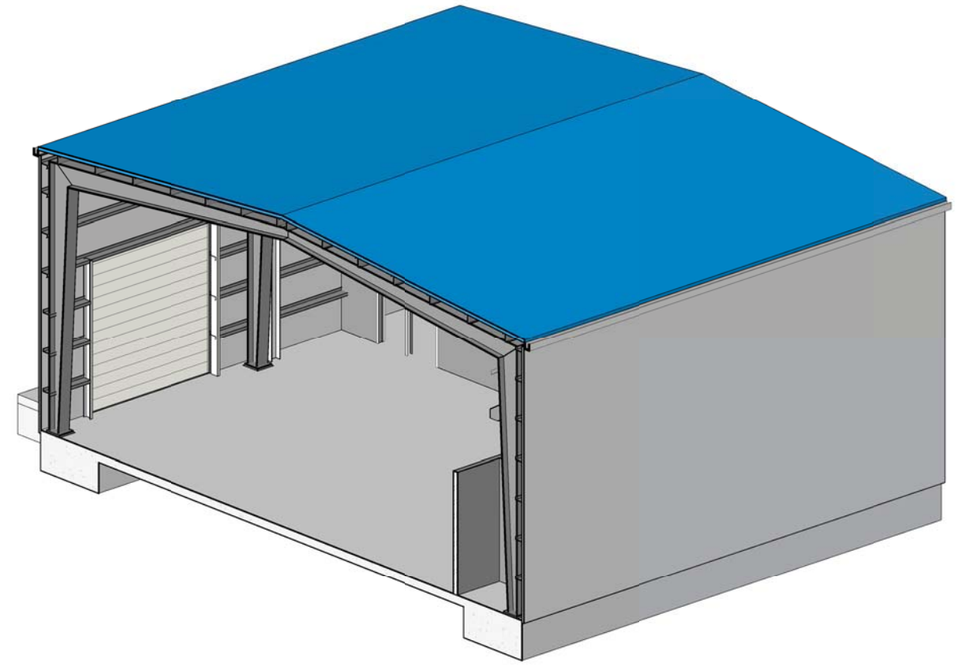

3D VIEW 2 LOOKING SOUTHWEST

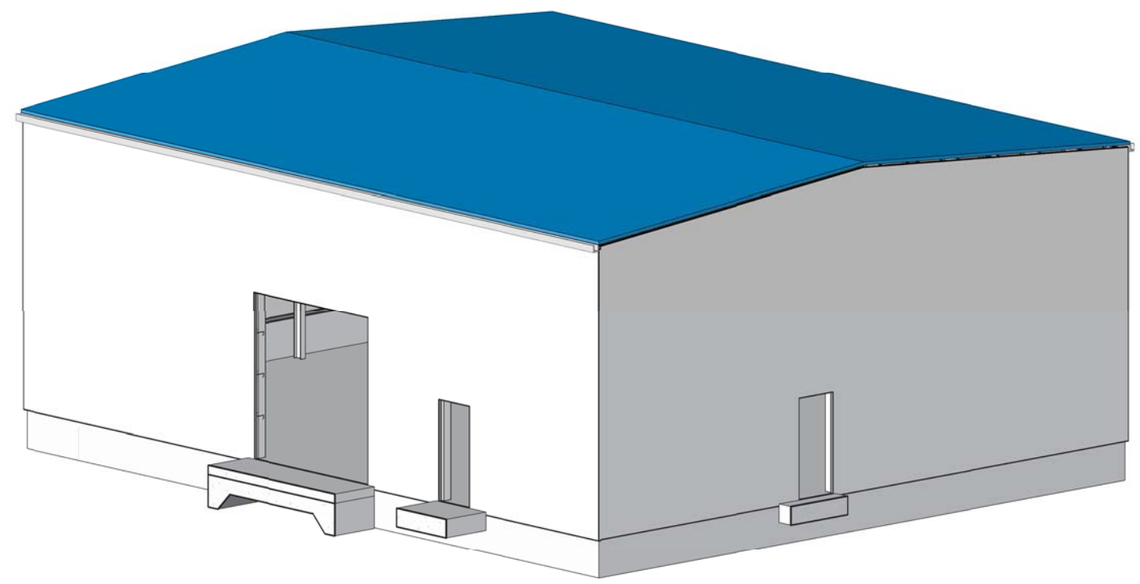

3D VIEW LOOKING NORTHWEST

- DRAFT -
NOT FOR
CONSTRUCTION

ARCADIS

No.	Date	DESCRIPTION	GM/SPEC	DWN	CHKD	SUPV	APVD BY
0	2/2/15	SUPPLEMENTAL PRE-FINAL (90%) DESIGN		CMW	MSL	JB	RAK

REVISIONS

APPROVED BY	SO
	SUPV JB
	DSGN MSL
	DWN CMW
	CHKD MSL
	OK RAK
	DATE 2/2/15
	SCALES NONE or AS SHOWN

TOPOCK GROUNDWATER REMEDIATION PROJECT

WORKSHOP BUILDING
AXONOMETRIC VIEWS

GAS TRANSMISSION & DISTRIBUTION
PACIFIC GAS AND ELECTRIC COMPANY
SAN FRANCISCO, CALIFORNIA

MICROFILM	
BILL OF MATL	
DWG LIST	
SUPSDS	
SUPSD BY	
SHEET NO. of SHEETS	
S-15-02	REV 1

1/16/2015 2:37:29 PM
C:\Users\cwancata\Documents\Topok Workshop Building_Structural_cwancata.rvt

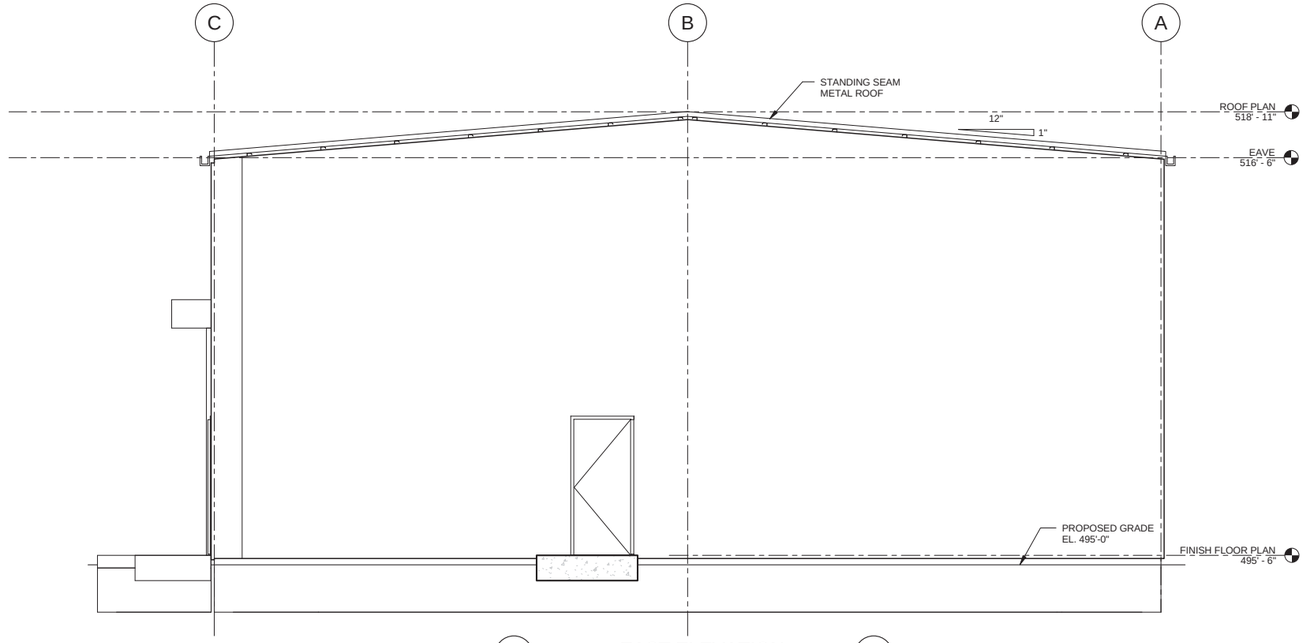

EAST ELEVATION
1/4" = 1'-0"

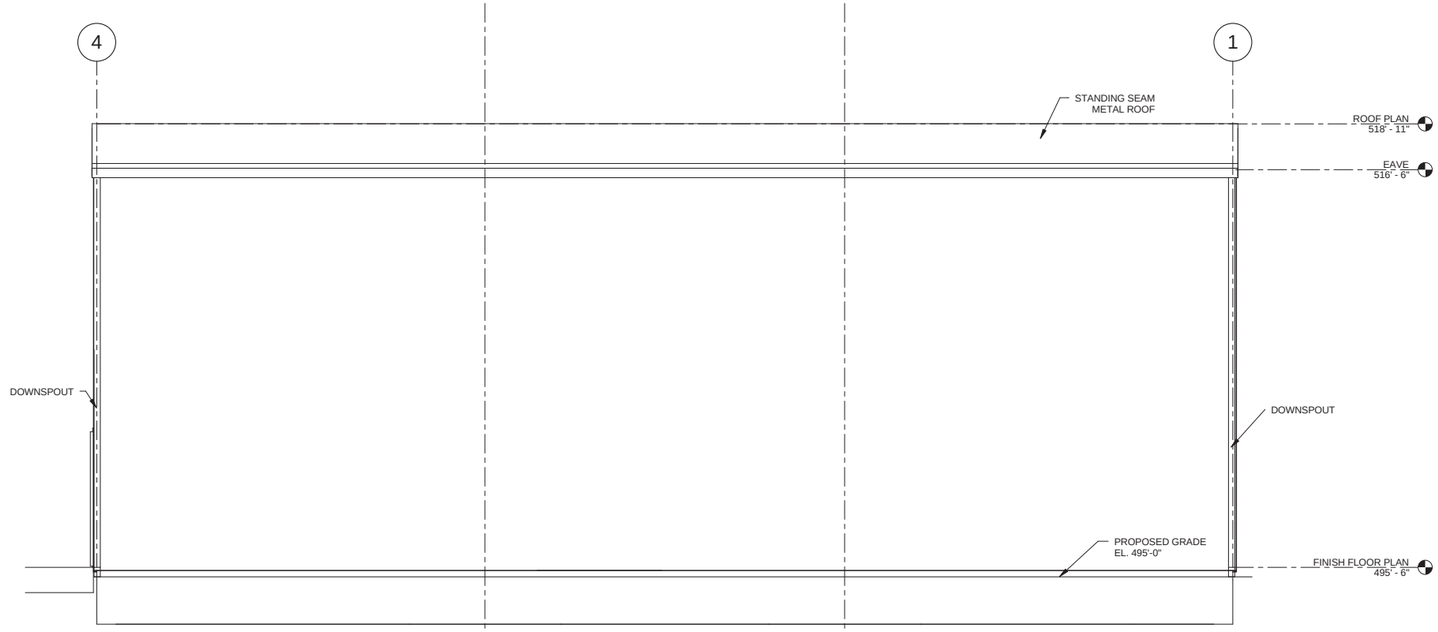

NORTH ELEVATION
1/4" = 1'-0"

- DRAFT -
NOT FOR
CONSTRUCTION

ARCADIS

No.	Date	DESCRIPTION	GM/SPEC	DWN	CHKD	SUPV	APVD BY
0	2/2/15	SUPPLEMENTAL PRE-FINAL (90%) DESIGN		CMW	MSL	JB	RAK

REVISIONS

APPROVED BY		
	SO	
	SUPV	JB
	DSGN	MSL
	DWN	CMW
	CHKD	MSL
	OK	RAK
	DATE	2/2/15
	SCALES	NONE or AS SHOWN

TOPOCK GROUNDWATER REMEDIATION PROJECT

WORKSHOP BUILDING ELEVATIONS
(1 OF 2)

GAS TRANSMISSION & DISTRIBUTION
PACIFIC GAS AND ELECTRIC COMPANY
SAN FRANCISCO, CALIFORNIA

MICROFILM	
BILL OF MATL	
DWG LIST	
SUPSDS	
SUPSD BY	
SHEET NO. of SHEETS	
S-15-03	REV 1

1/16/2015 2:37:30 PM
C:\Users\cwancata\Documents\Topok Workshop Building_Structural_cwancata.rvt

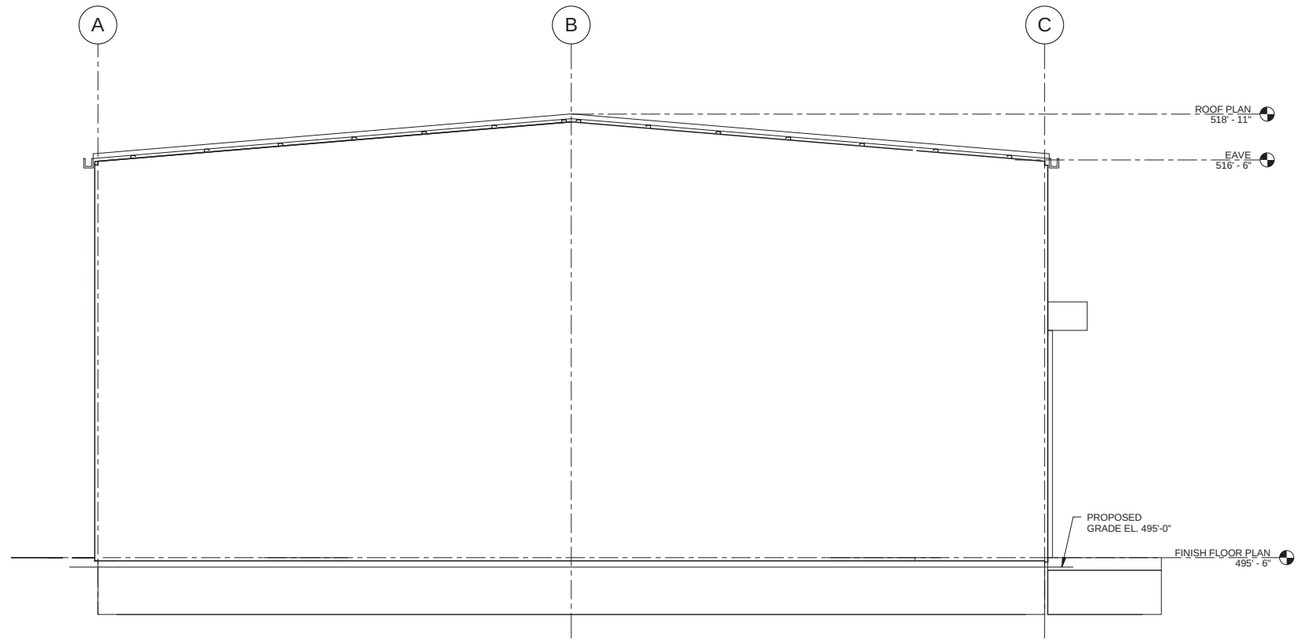

WEST ELEVATION
1/4" = 1'-0"

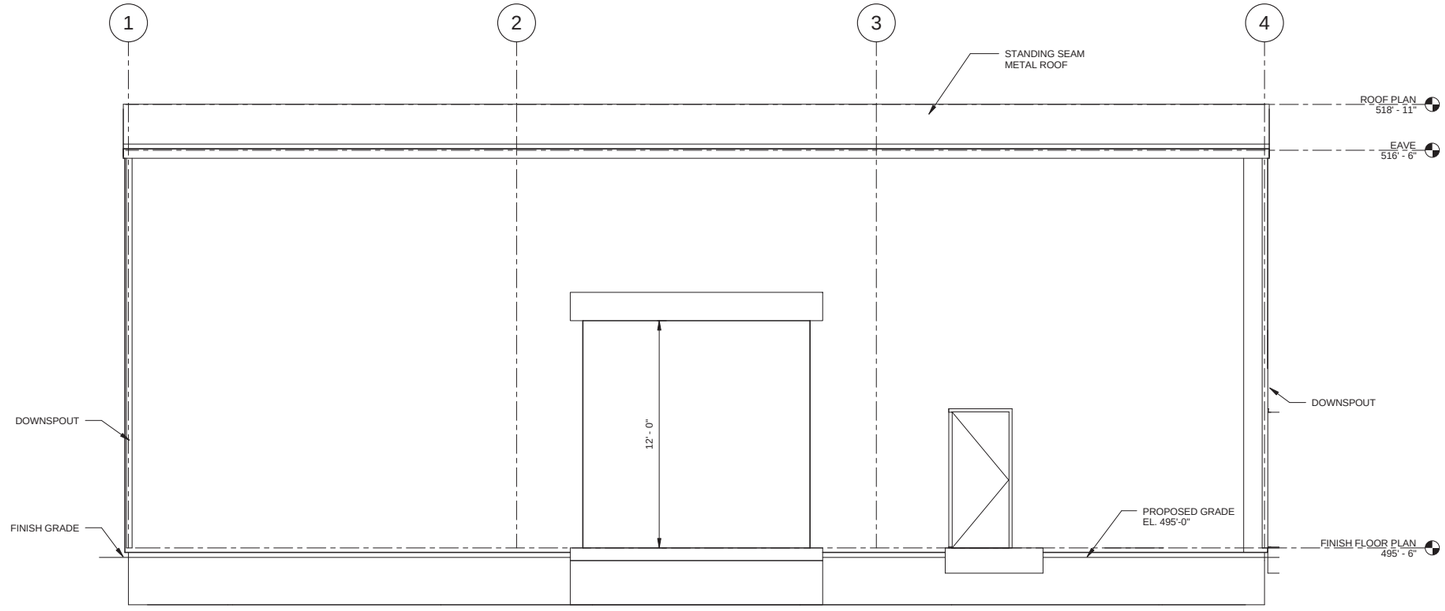

SOUTH ELEVATION
1/4" = 1'-0"

- DRAFT -
NOT FOR
CONSTRUCTION

ARCADIS

No.	Date	DESCRIPTION	GM/SPEC	DWN	CHKD	SUPV	APVD BY
0	2/2/15	SUPPLEMENTAL PRE-FINAL (90%) DESIGN		CMW	MSL	JB	RAK

REVISIONS

APPROVED BY		
	SO	
	SUPV	JB
	DSGN	MSL
	DWN	CMW
	CHKD	MSL
	OK	RAK
	DATE	2/2/15
	SCALES	NONE or AS SHOWN

TOPOCK GROUNDWATER REMEDIATION PROJECT

WORKSHOP BUILDING ELEVATIONS
(2 OF 2)

GAS TRANSMISSION & DISTRIBUTION
PACIFIC GAS AND ELECTRIC COMPANY
SAN FRANCISCO, CALIFORNIA

MICROFILM
BILL OF MATL
DWG LIST
SUPSDS
SUPSD BY
SHEET NO. of SHEETS
S-15-04
REV 1

1/16/2015 2:37:31 PM
C:\Users\cwancata\Documents\Topok Workshop Building_Structural_cwancata.rvt

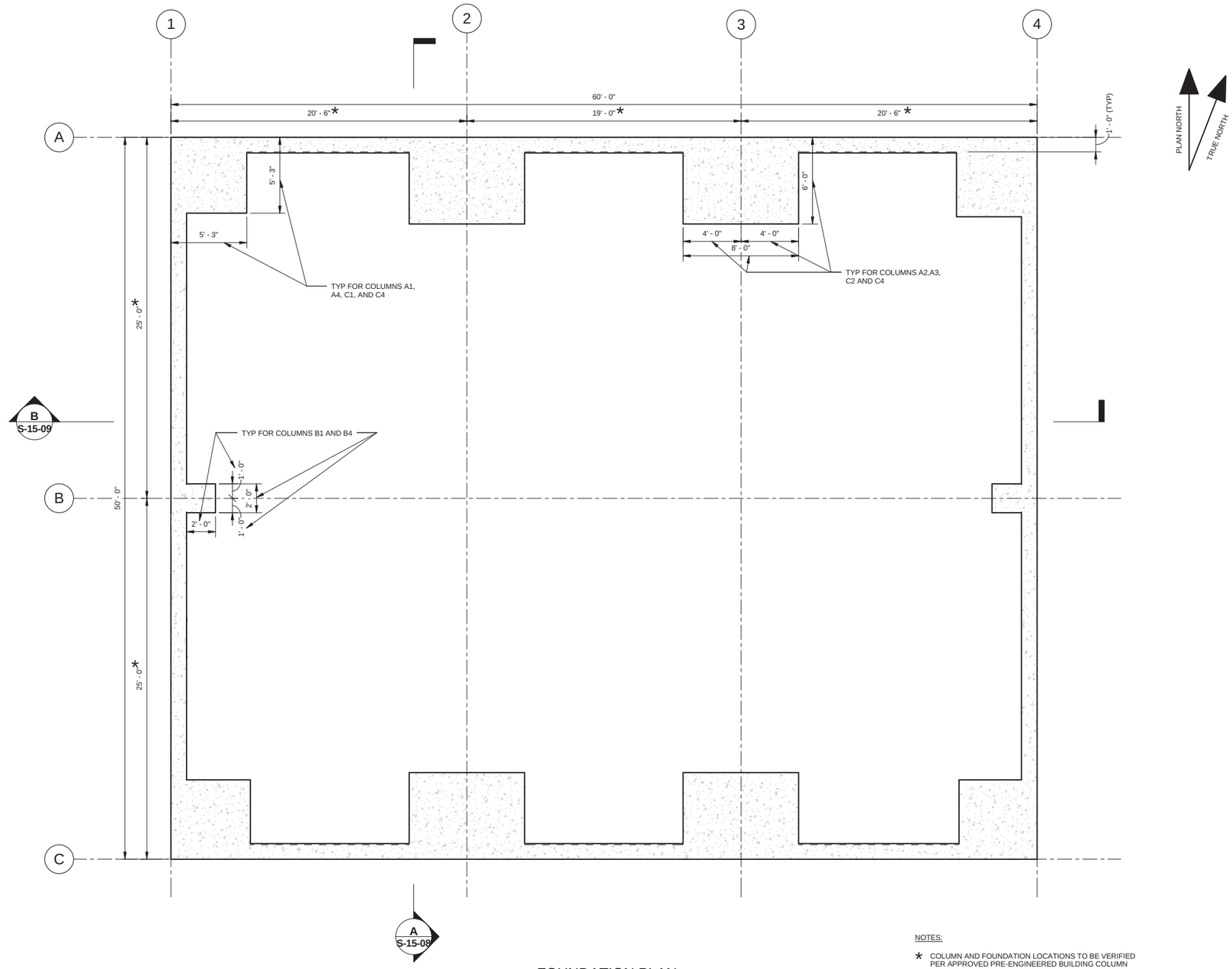

FOUNDATION PLAN
1/4" = 1'-0"

NOTES:

* COLUMN AND FOUNDATION LOCATIONS TO BE VERIFIED PER APPROVED PRE-ENGINEERED BUILDING COLUMN LOCATIONS.

1. P.E. SIGNED & SEALED BUILDING SHOP DRAWINGS AND DETAILED DESIGN CALCULATIONS ARE TO BE COMPLETED, SUBMITTED AND APPROVED BY THE ENGINEER OF RECORD PRIOR TO PLACEMENT OF FOUNDATION CONCRETE.

- DRAFT -
NOT FOR CONSTRUCTION

ARCADIS

No.	Date	DESCRIPTION	GM/SPEC	DWN	CHKD	SUPV	APVD BY
0	2/2/15	SUPPLEMENTAL PRE-FINAL (90%) DESIGN		CMW	MSL	JB	RAK

REVISIONS

APPROVED BY	SO
	SUPV JB
	DSGN MSL
	DWN CMW
	CHKD MSL
	OK RAK
	DATE 2/2/15
	SCALES NONE or AS SHOWN

TOPOCK GROUNDWATER REMEDIATION PROJECT

WORKSHOP BUILDING FOUNDATION PLAN

GAS TRANSMISSION & DISTRIBUTION
PACIFIC GAS AND ELECTRIC COMPANY
SAN FRANCISCO, CALIFORNIA

MICROFILM
BILL OF MATL
DWG LIST
SUPSDS
SUPSD BY
SHEET NO. of SHEETS
S-15-05
REV 1

1/16/2015 2:37:31 PM
C:\Users\cwancata\Documents\Topok Workshop Building_Structural_cwancata.rvt

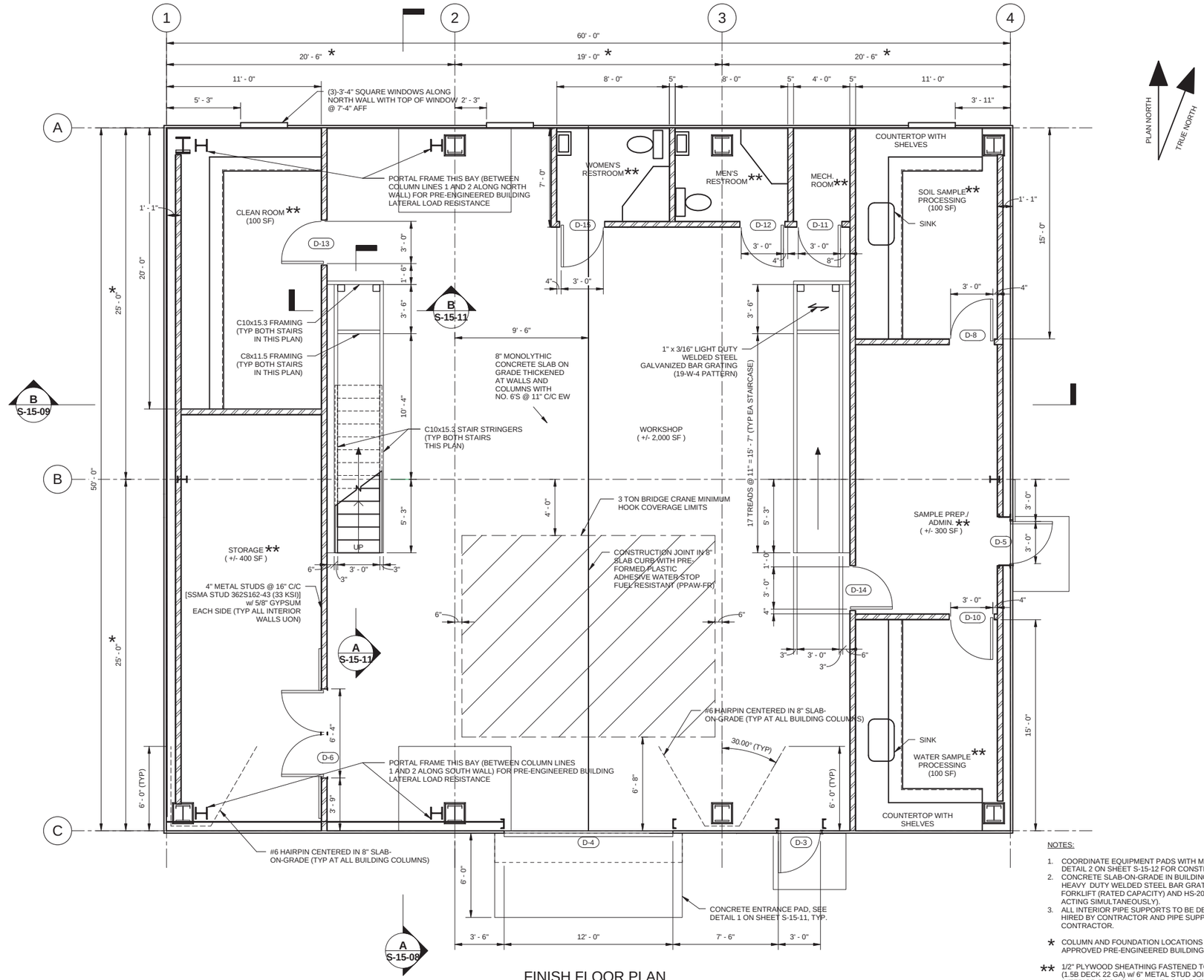

FINISH FLOOR PLAN
1/4" = 1'-0"

NOTES:

1. COORDINATE EQUIPMENT PADS WITH MECHANICAL DRAWINGS. SEE DETAIL 2 ON SHEET S-15-12 FOR CONSTRUCTION REQUIREMENTS.
2. CONCRETE SLAB-ON-GRADE IN BUILDING, CONCRETE RAMPS, AND HEAVY DUTY WELDED STEEL BAR GRATING IS DESIGNED FOR 3 TON FORKLIFT (RATED CAPACITY) AND HS-20 TRAFFIC LOADS (LOADS NOT ACTING SIMULTANEOUSLY).
3. ALL INTERIOR PIPE SUPPORTS TO BE DESIGNED BY CALIFORNIA P.E. HIRED BY CONTRACTOR AND PIPE SUPPORTS TO BE PORVIDED BY CONTRACTOR.

* COLUMN AND FOUNDATION LOCATIONS TO BE VERIFIED PER APPROVED PRE-ENGINEERED BUILDING COLUMN LOCATIONS.

** 1/2" PLYWOOD SHEATHING FASTENED TO TOP OF METAL ROOF DECK (1.5B DECK 22 GA) w/ 6" METAL STUD JOISTS AT 16" C/C (TYP ALL INTERIOR ROOMS) (MAX LIVE LOAD RATING = 50 PSF)

- DRAFT -
NOT FOR CONSTRUCTION

ARCADIS

No.	Date	DESCRIPTION	GM/SPEC	DWN	CHKD	SUPV	APVD BY
0	2/2/15	SUPPLEMENTAL PRE-FINAL (90%) DESIGN	CMW	MSL	JB	RAK	

REVISIONS

APPROVED BY	SO
	SUPV JB
	DSGN MSL
	DWN CMW
	CHKD MSL
	OK RAK
	DATE 2/2/15
	SCALES NONE or AS SHOWN

TOPOCK GROUNDWATER REMEDIATION PROJECT

WORKSHOP BUILDING FINISH FLOOR PLAN

GAS TRANSMISSION & DISTRIBUTION
PACIFIC GAS AND ELECTRIC COMPANY
SAN FRANCISCO, CALIFORNIA

MICROFILM	
BILL OF MATL	
DWG LIST	
SUPSDS	
SUPSD BY	
SHEET NO. of SHEETS	
S-15-06	REV 1

1/16/2015 2:37:32 PM
C:\Users\cowancata\Documents\Topok Workshop Building_Structural_cwancata.rvt

PHOTOVOLTAIC (PV) SOLAR PANEL NOTES:

1. PV SOLAR PANEL UNITS ARE TO BE PROVIDED ON TOP OF THE METAL ROOF DECK OF THE WORKSHOP BUILDING. THE PV SOLAR PANEL UNIT MANUFACTURER IS RESPONSIBLE FOR THE FOLLOWING:
   A. THE PV SOLAR PANEL UNIT MANUFACTURER IS RESPONSIBLE FOR PROVIDING AND DESIGNING ALL ITEMS (PV SOLAR PANELS/PANEL SUPPORT FRAMING/ROOF CLIPS (ATTACHING TO METAL ROOF DECK)/HARDWARE/ ETC.). THIS INCLUDES THE STRUCTURAL FRAMING AND HARDWARE ATTACHING TO THE BACK OF THE PV SOLAR PANELS AND SPANNING TO EACH ROOF CLIP (ATTACHING TO METAL ROOF DECK). THE CONNECTION OF THE PV SOLAR PANEL UNIT FRAMING TO THE ROOF CLIP (ATTACHING TO METAL ROOF DECK), AND THE ROOF CLIP AND ITS BOLTED/WELDED CONNECTION TO THE METAL DECK ROOF ITSELF.
   B. THE PV SOLAR PANEL UNIT MANUFACTURER MUST PROVIDE THE FOLLOWING:
      1. SUBMIT P.E. (REGISTERED IN THE STATE OF CALIFORNIA) SIGNED AND SEALED DETAILS/DESIGN CALCULATIONS/DESIGN LOADS/ (DEAD/LIVE/SEISMIC/WIND LOADS) ACTING ON THE PV SOLAR PANEL UNITS, PANEL SUPPORT FRAMING, ROOF CLIPS AND ITS BOLTED/WELDED CONNECTION TO THE METAL ROOF DECK, AND HARDWARE.

* COLUMN AND FOUNDATION LOCATIONS TO BE VERIED PER APPROVED PRE-ENGINEERED BUILDING COLUMN LOCATIONS.

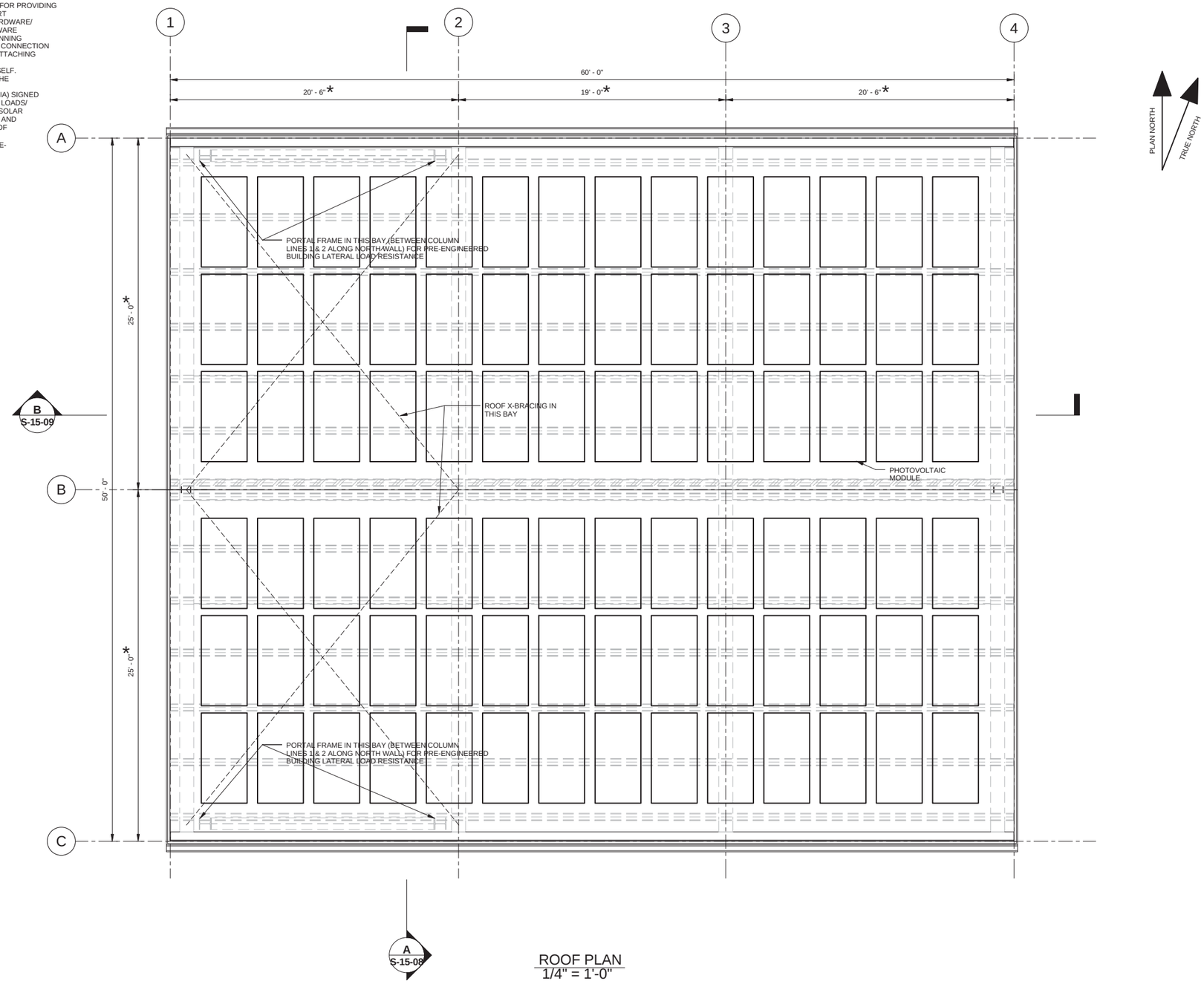

ROOF PLAN
1/4" = 1'-0"

NOTES:

1. NORTH SIDE PHOTOVOLTAICS MOUNTED AT 10 DEGREE TILT TOWARD SOUTH.

- DRAFT -
NOT FOR
CONSTRUCTION

ARCADIS

No.	Date	DESCRIPTION	GM/SPEC	DWN	CHKD	SUPV	APVD BY
0	2/2/15	SUPPLEMENTAL PRE-FINAL (90%) DESIGN		CMW	MSL	JB	RAK

REVISIONS

APPROVED BY
SO
SUPV JB
DSGN MSL
DWN CMW
CHKD MSL
OK RAK
DATE 2/2/15
SCALES NONE or AS SHOWN

TOPOCK GROUNDWATER REMEDIATION PROJECT

WORKSHOP BUILDING ROOF PLAN

GAS TRANSMISSION & DISTRIBUTION
PACIFIC GAS AND ELECTRIC COMPANY
SAN FRANCISCO, CALIFORNIA

MICROFILM
BILL OF MATL
DWG LIST
SUPSDS
SUPSD BY
SHEET NO. of SHEETS
S-15-07
REV 1

1/16/2015 2:37:33 PM
C:\Users\cwancata\Documents\Topok Workshop Building_Structural_cwancata.rvt

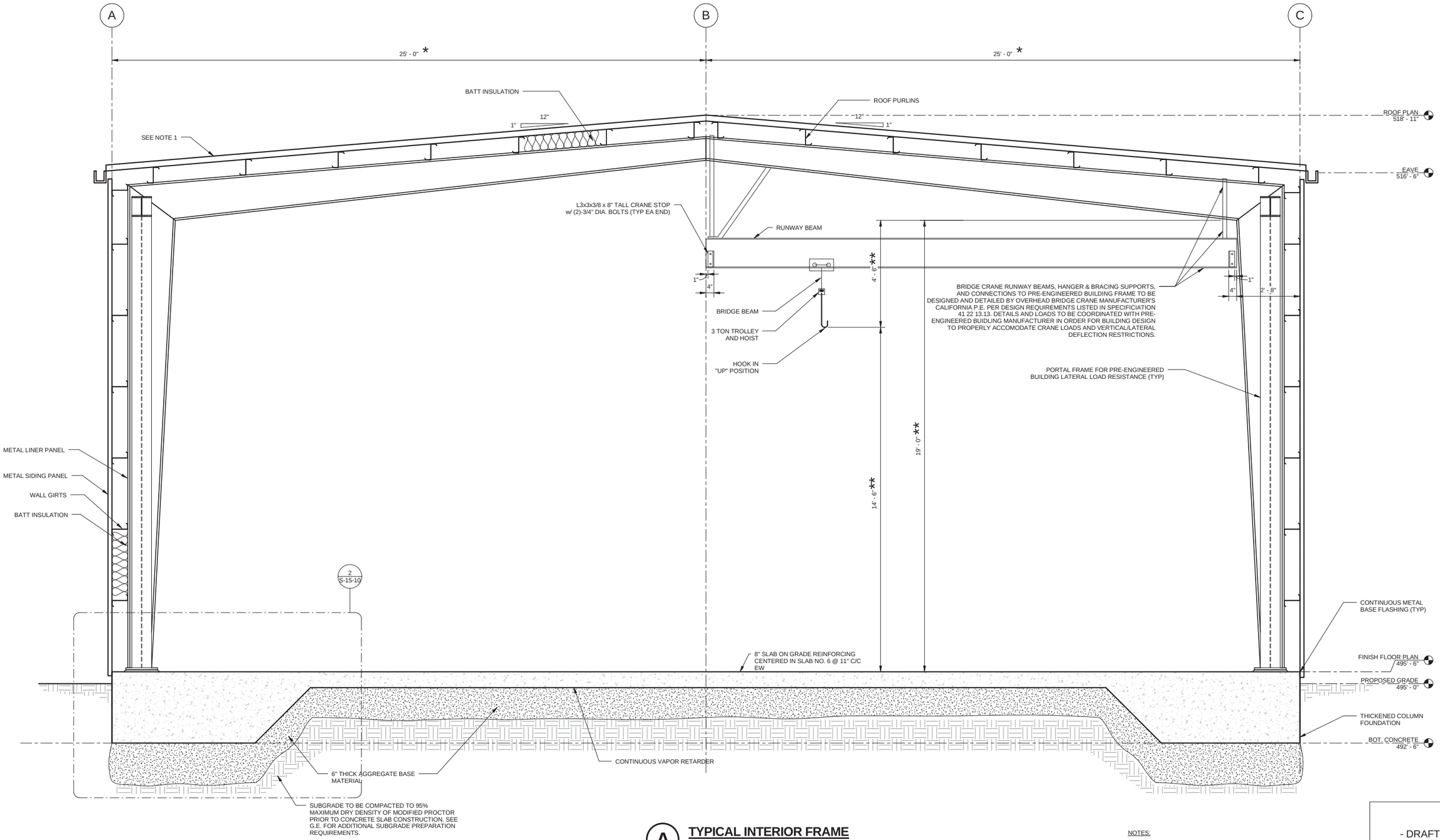

A TYPICAL INTERIOR FRAME

1/2" = 1'-0"

NOTES:

1. PHOTOVOLTAIC MODULES NOT SHOW FOR CLARITY.

* COLUMN AND FOUNDATION LOCATIONS TO BE VERIFIED PER APPROVED PRE-EINGEERED BUILDING COLUMN LOCATIONS.

** HEIGHT FROM TOP OF FLOOR TO BOTTOM OF FRAME RAFTER BEAM TO BE VERIFIED TO ACHIEVE MINIMUM 14'-6" HOOK CLEARANCE HEIGHT FROM FLOOR

- DRAFT -
NOT FOR
CONSTRUCTION

ARCADIS

No.	Date	DESCRIPTION	GM/SPEC	DWN	CHKD	SUPV	APVD BY
0	2/2/15	SUPPLEMENTAL PRE-FINAL (90%) DESIGN		CMW	MSL	JB	RAK

REVISIONS

APPROVED BY	
SO	
SUPV	JB
DSGN	MSL
DWN	CMW
CHKD	MSL
OK	RAK
DATE	2/2/15
SCALES	NONE or AS SHOWN

TOPOCK GROUNDWATER REMEDIATION PROJECT

WORKSHOP BUILDING
SECTION-TYPICAL FRAME

GAS TRANSMISSION & DISTRIBUTION
PACIFIC GAS AND ELECTRIC COMPANY
SAN FRANCISCO, CALIFORNIA

MICROFILM	
BILL OF MATL	
DWG LIST	
SUPSDS	
SUPSD BY	
SHEET NO. of SHEETS	
S-15-08	REV 1

1/16/2015 2:37:34 PM
C:\Users\cwancata\Documents\Topok Workshop Building_Structural_cwancata.rvt

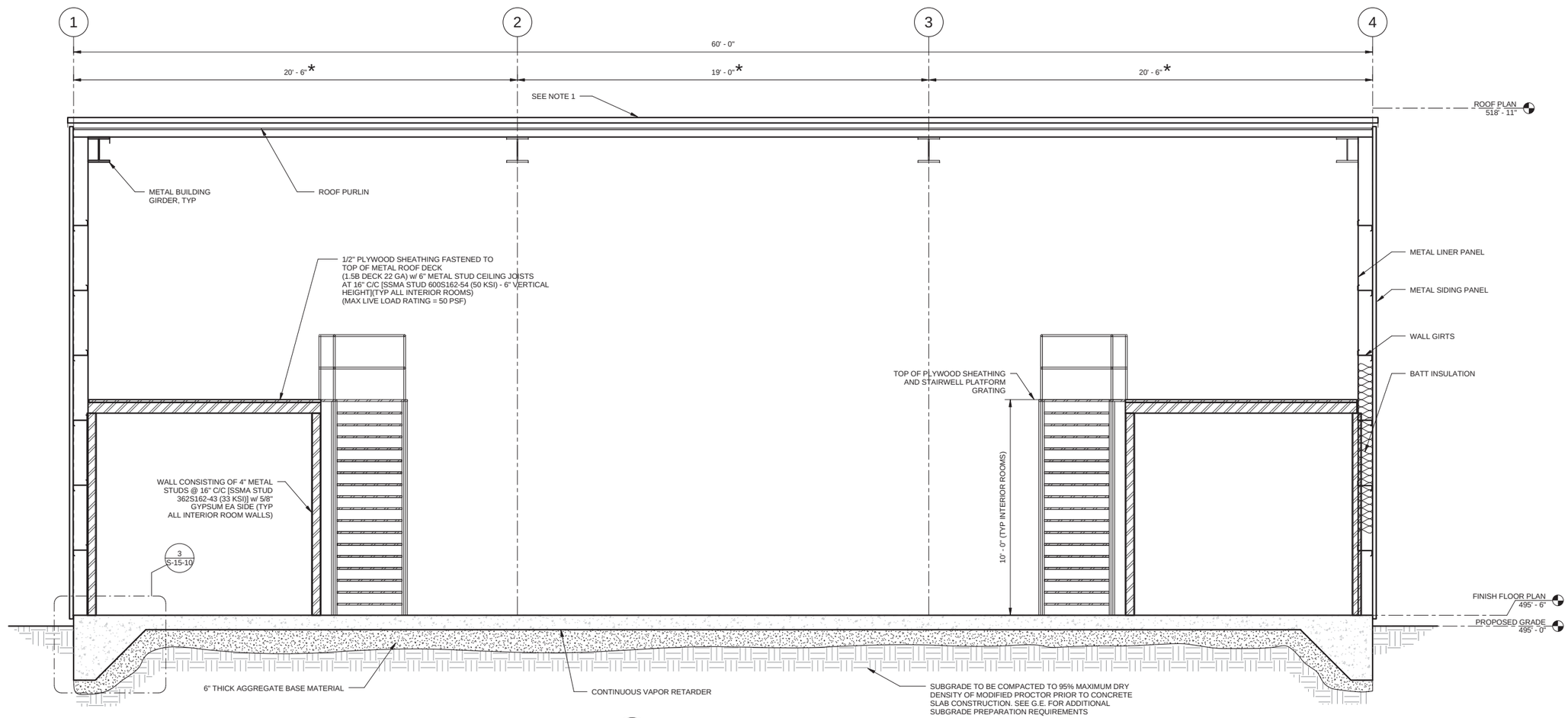

B BUILDING SECTION

3/8" = 1'-0"

NOTES:

1. PHOTOVOLTAIC MODULES NOT SHOWN FOR CLARITY.

* COLUMN AND FOUNDATION LOCATIONS TO BE VERIFIED PER APPROVED PRE-ENGINEERED BUILDING COLUMN LOCATIONS.

- DRAFT -
NOT FOR CONSTRUCTION

ARCADIS

No.	Date	DESCRIPTION	GM/SPEC	DWN	CHKD	SUPV	APVD BY
0	2/2/15	SUPPLEMENTAL PRE-FINAL (90%) DESIGN		CMW	MSL	JB	RAK

REVISIONS

APPROVED BY

SO	
SUPV	JB
DSGN	MSL
DWN	CMW
CHKD	MSL
OK	RAK
DATE	2/2/15
SCALES	NONE or AS SHOWN

TOPOCK GROUNDWATER REMEDIATION PROJECT

WORKSHOP BUILDING SECTION

GAS TRANSMISSION & DISTRIBUTION
PACIFIC GAS AND ELECTRIC COMPANY
SAN FRANCISCO, CALIFORNIA

MICROFILM
BILL OF MATL
DWG LIST
SUPSDS
SUPSD BY
SHEET NO. of SHEETS

S-15-09

REV 1

1/16/2015 2:37:35 PM
C:\Users\ovarcata\Documents\Topok Workshop Building_Structural_ovarcata.rvt

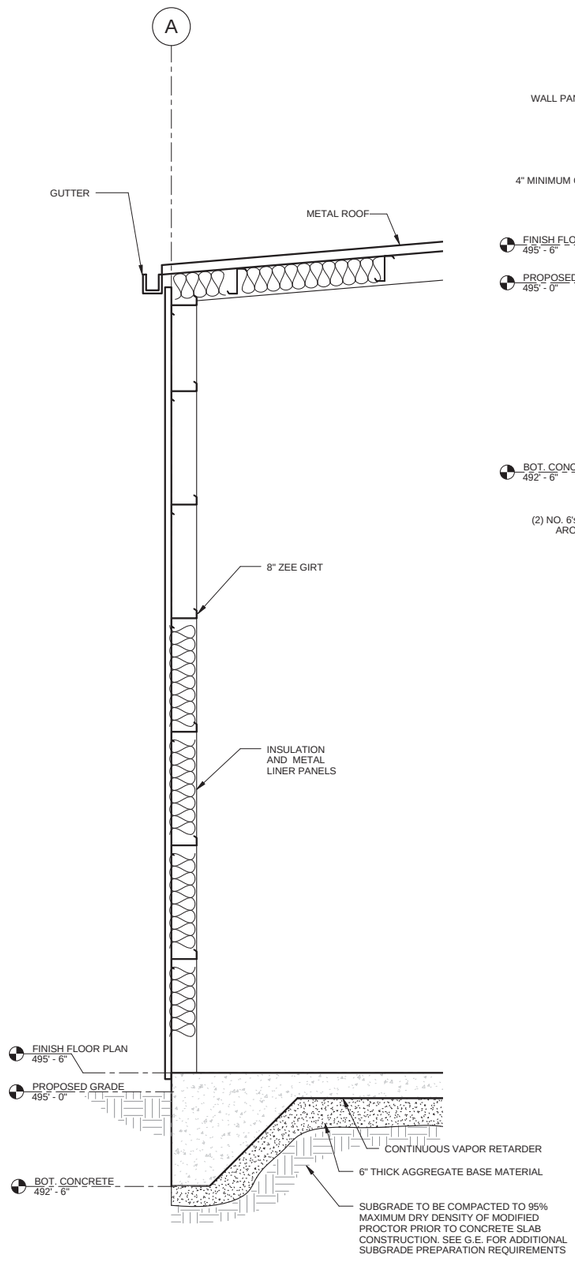

1 TYPICAL SIDEWALL SECTION
1/2" = 1'-0"

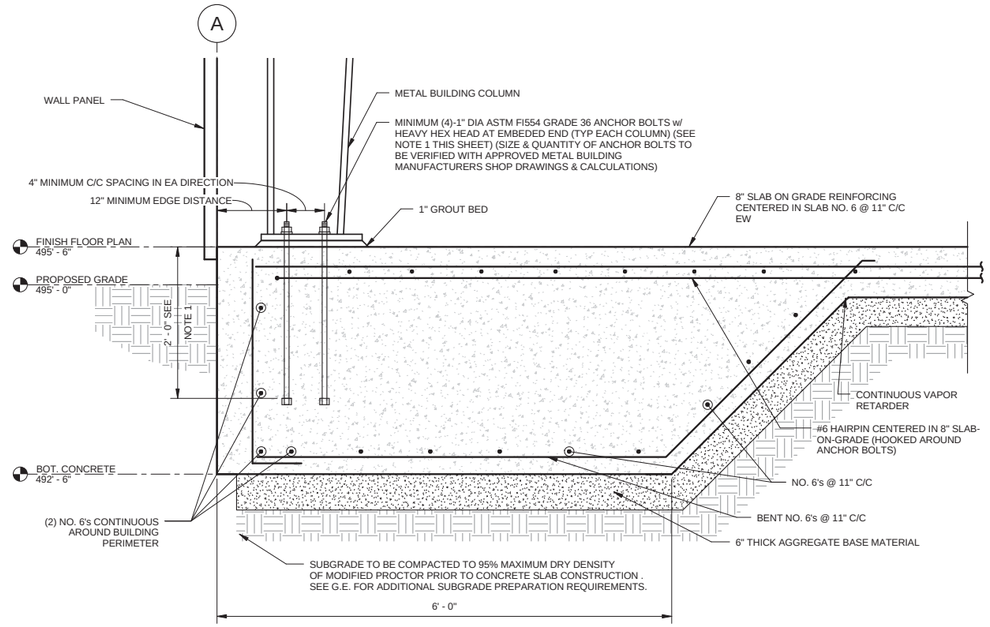

2 INTERIOR FRAME PIER DETAIL
1" = 1'-0"

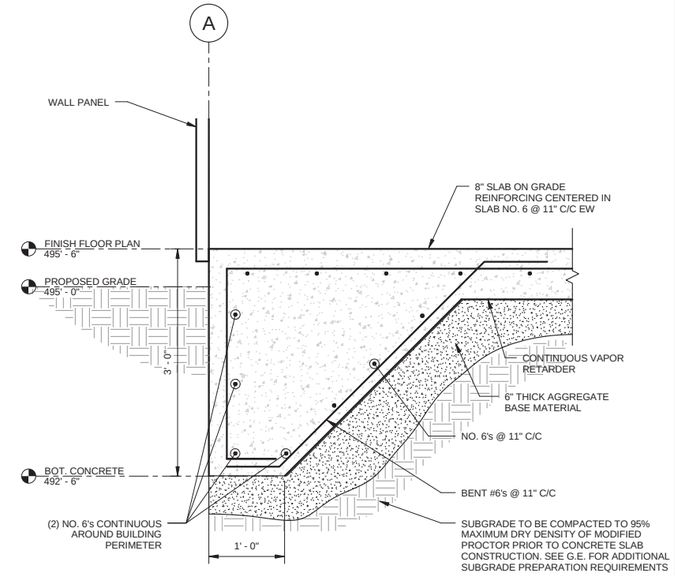

3 TYPICAL WALL FOOTER
1" = 1'-0"

NOTES:

1. EXTEND COLUMN ANCHOR BOLTS A MINIMUM OF 9" INTO FOUNDATION WITH HEAVY HEX NUT TACK-WELDED AT EMBEDED END.
2. PROVIDE STANDARD 90° DOWELS AT CORNERS FOR REINFORCEMENT IDENTIFIED AS CONTINUOUS. SEE DETAIL 6 ON SHEET S-15-12.

- DRAFT -
NOT FOR CONSTRUCTION

ARCADIS

No.	Date	DESCRIPTION	GM/SPEC	DWN	CHKD	SUPV	APVD BY
0	2/2/15	SUPPLEMENTAL PRE-FINAL (90%) DESIGN		CMW	MSL	JB	RAK

REVISIONS

APPROVED BY	
SO	
SUPV	JB
DSGN	MSL
DWN	CMW
CHKD	MSL
OK	RAK
DATE	2/2/15
SCALES	NONE or AS SHOWN

TOPOCK GROUNDWATER REMEDIATION PROJECT

WORKSHOP BUILDING SECTIONS & DETAILS (1 OF 2)

GAS TRANSMISSION & DISTRIBUTION
PACIFIC GAS AND ELECTRIC COMPANY
SAN FRANCISCO, CALIFORNIA

MICROFILM
BILL OF MATL
DWG LIST
SUPSDS
SUPSD BY
SHEET NO. of SHEETS
S-15-10
REV 1

1/16/2015 2:37:37 PM
C:\Users\cwancata\Documents\Topck Workshop Building_Structural_cwancata.rvt

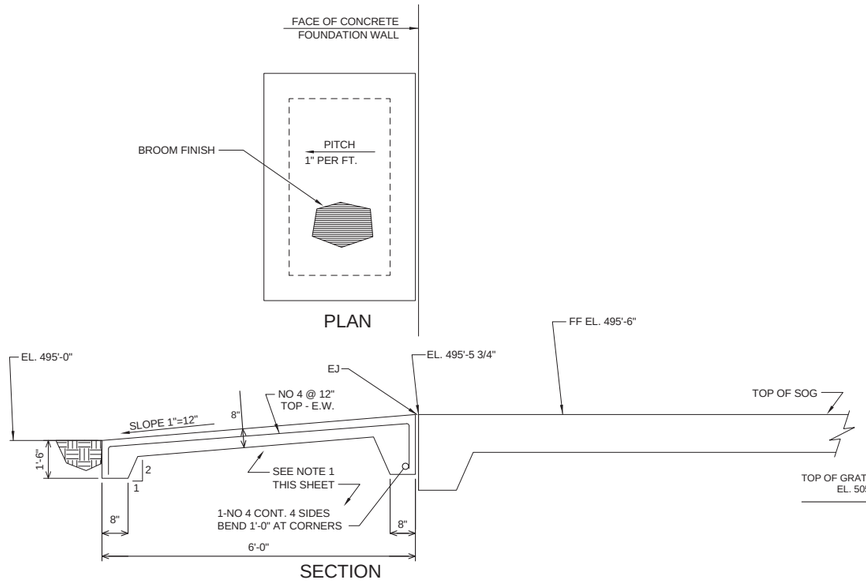

NOTE:

1. FREE DRAINING NON-FROST SUSCEPTIBLE GRANULAR MATERIAL.

1 CONCRETE ENTRANCE PAD DETAIL

SCALE: NO SCALE

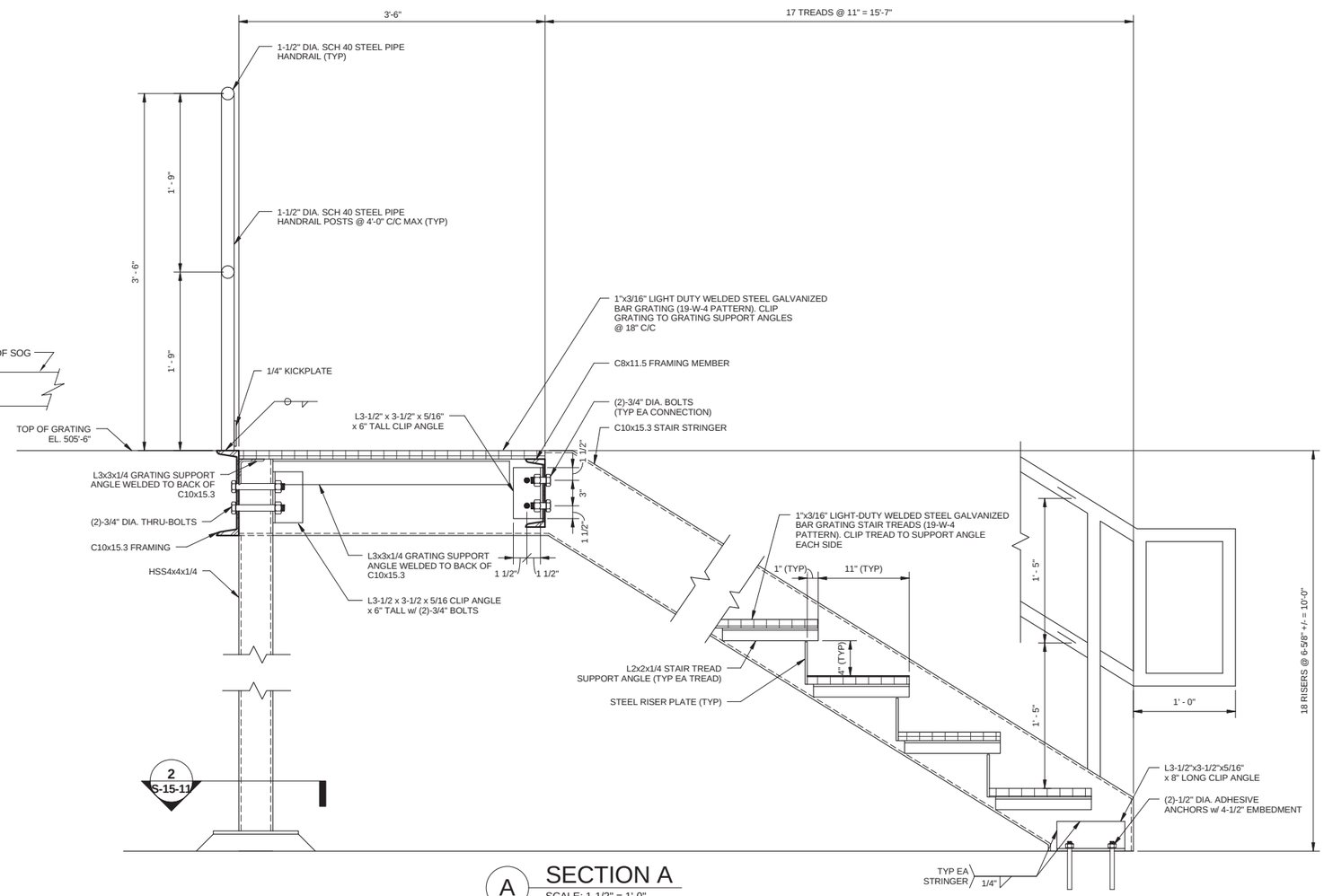

A SECTION A

SCALE: 1-1/2" = 1'-0"

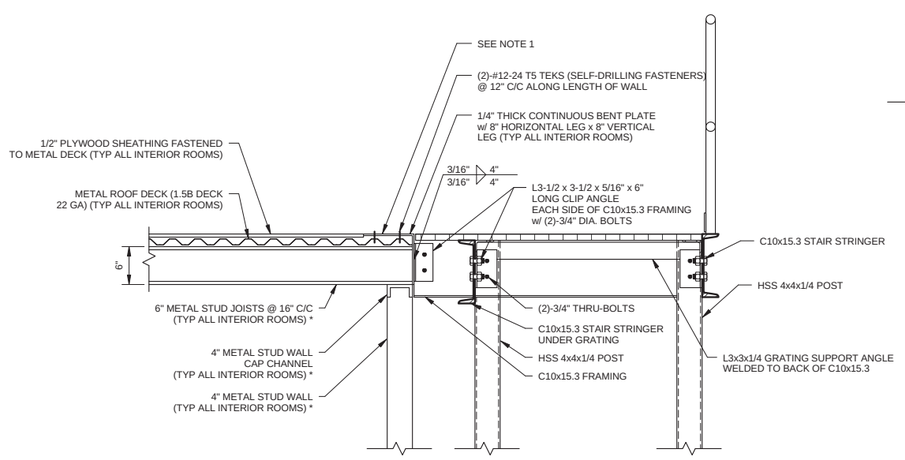

B SECTION B

SCALE: 1" = 1'-0"

NOTES:

1. 3'-6" TALL HANDRAIL (SEE SECTION A FOR RAIL SIZE & SPACING, POST SIZE & SPACING, KICKPLATE, AND BASE WELD) REQUIRED ALONG ALL EDGES OF INTERIOR ROOM CEILINGS. WELD POST TO TOP OF 1/4" CONTINUOUS BENT PLATE.

* METAL STUD WALL, WALL CAP CHANNEL, STUD JOISTS, AND THEIR CONNECTIONS TO BE CONSTRUCTED PER METAL STUD MANUFACTURER ASSOCIATION STANDARD DETAILS.

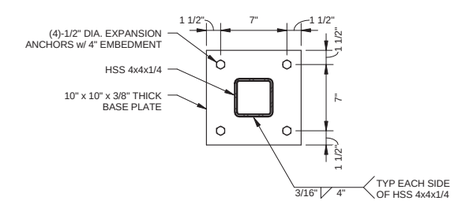

2 COLUMN BASEPLATE DETAIL

SCALE: 1-1/2" = 1'-0"

- DRAFT -
NOT FOR
CONSTRUCTION

ARCADIS

No.	Date	DESCRIPTION	GM/SPEC	DWN	CHKD	SUPV	APVD BY
0	2/2/15	SUPPLEMENTAL PRE-FINAL (90%) DESIGN		CMW	MSL	JB	RAK

REVISIONS

APPROVED BY	SO	
	SUPV	JB
	DSGN	MSL
	DWN	CMW
	CHKD	MSL
	OK	RAK
	DATE	2/2/15
	SCALES	NONE or AS SHOWN

TOPOCK GROUNDWATER REMEDIATION PROJECT

WORKSHOP BUILDING SECTIONS AND DETAILS (2 0F 2)

GAS TRANSMISSION & DISTRIBUTION
PACIFIC GAS AND ELECTRIC COMPANY
SAN FRANCISCO, CALIFORNIA

MICROFILM	
BILL OF MATL	
DWG LIST	
SUPSDS	
SUPSD BY	
SHEET NO. of SHEETS	
S-15-11	REV 1

1/16/2015 2:37:37 PM
C:\Users\cwancata\Documents\Topok Workshop Building_Structural_cwancata.rvt

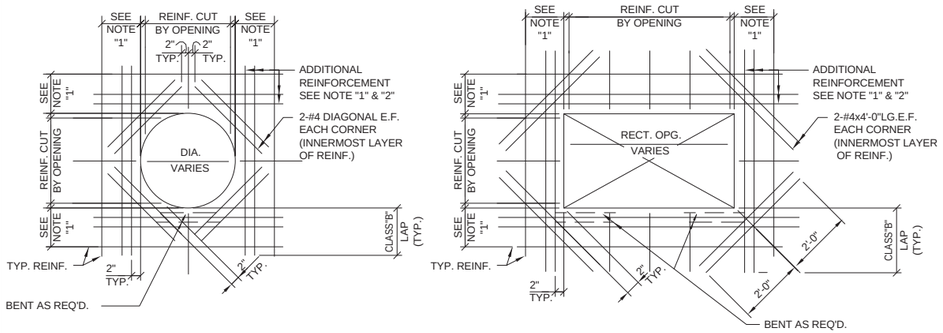

CIRCULAR

RECTANGULAR

1 TYPICAL REINFORCING AROUND OPENING IN WALL AND SLAB

SCALE: NO SCALE

NOTES:
1. PROVIDE ADDITIONAL REINFORCEMENT AT ALL OPNGS. EQUAL IN AREA TO TYPICAL REINFORCEMENT CUT BY OPENING IN EACH DIRECTION. ADDITIONAL REINFORCEMENT TO MATCH SIZE OF TYPICAL REINFORCEMENT (MIN. 2 BARS E.F.) AND PLACED BETWEEN TYPICAL REINFORCEMENT ON EACH SIDE OF OPENING
2. PROVIDE MATCHING DWLS. WHERE REQ'D. TO PROVIDE CLASS "B" LAP WITH ADDITIONAL. REINF.

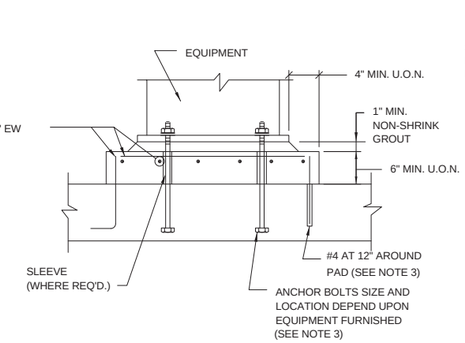

2 TYPICAL EQUIPMENT SUPPORT PAD DETAIL

SCALE: NO SCALE

NOTES:
1. PROVIDE TYP. 6" MIN. CONCRETE SUPPORT PAD FOR ALL EQUIPMENT UON.
2. COORDINATE LOCATION AND SIZE OF PADS WITH OTHER DWGS AND MFGRS CERTIFED DWGS.
3. FOR EXIST. SLABS, DRILL HOLE DIA. & DEPTH IN EXISTING SLAB PER MANUFACTURER'S REQ'MTS FOR ADHESIVE ANSHORAGE SYSTEM.

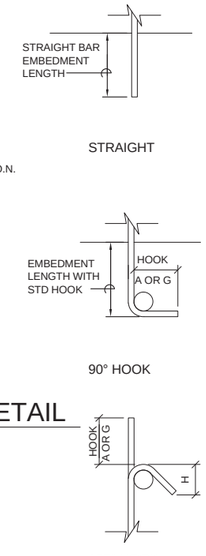

REINFORCEMENT LAP SPLICE, EMBEDMENT LENGTH AND STANDARD HOOKS												
BAR SIZE	MIN LAP LENGTHS FOR				MIN EMBEDMENT LENGTHS					MIN STD. HOOKS		
	BEAMS AND COLUMNS*		SLABS AND WALLS **		FOR BEAMS AND COLUMNS *		FOR SLABS AND WALLS **		WITH STD HOOKS	90°	135°	
	CLASS B		CLASS B									
	TOP***	OTHERS	TOP***	OTHERS	TOP***	OTHERS	TOP***	OTHERS		A OR G	A OR G	H
#3	25	19	16	16	19	15	12	12	5	6	4	2.5
#4	33	25	20	16	25	19	15	12	7	8	4.5	3
#5	41	31	25	19	31	24	19	15	9	10	5.5	3.75
#6	49	37	29	23	37	29	23	18	10	12	8	4.5
#7	71	54	43	33	54	42	33	25	12	14	9	5.25
#8	81	62	49	37	62	48	37	29	14	16	10.5	6
#9	91	70	60	46	70	54	46	36	15	19	-	-
#10	102	79	74	57	79	61	57	44	17	22	-	-
#11	114	87	89	69	87	67	68	53	19	24	-	-

NOTES:

REINFORCEMENT LAP SPLICE, EMBEDMENT LENGTH AND STANDARD HOOKS TABLE IS BASED ON A MINIMUM CONCRETE COMPRESSIVE STRENGTH OF 4000 PSI AND 60000 PSI REINFORCEMENT (WITH NO EPOXY COATING).

ALL LAP SPLICES SHALL BE CLASS B SPLICES.

* THE MINIMUM LAP LENGTH FOR BEAMS, COLUMNS, AND STRAIGHT EMBEDMENTS ARE BASED ON A 3 BAR DIAMETER MINIMUM CENTER TO CENTER BAR SPACING AND A 2 INCH BAR COVER. IF THE SPLICE AND/OR EMBEDMENT DOES NOT CONFORM TO THESE REQUIREMENTS, THEN CONTRACTOR SHALL APPLY APPROPRIATE FACTORS IN COMPLIANCE WITH ACI 318 WITH APPROVAL BY ENGINEER.

** THE MINIMUM LAP LENGTH FOR SLABS, WALLS, AND STRAIGHT EMBEDMENTS ARE BASED ON A 6 INCH BAR SPACING AND A 2 INCH BAR COVER. IF THE LAP CONDITION DOES NOTE CONFORM TO THESE REQUIREMENTS, THEN USE BEAM LAP LENGTHS; OR COMPLY WITH LAP REQUIREMENTS OF ACI 318 WITH APPROVAL BY ENGINEER.

*** TOP BARS ARE DEFINED AS ALL HORIZONTAL BARS, EXCLUDING WALL BARS, WITH 12" OR MORE FRESH CONCRETE BENEATH.

WHERE SPLICES ARE REQUIRED BETWEEN BARS OF DIFFERENT SIZES, THE LAP LENGTH SHALL BE NO LESS THAN THE EMBEDMENT LENGTH OF THE LARGER BAR OR THE LAP LENGTH OF THE SMALLER BAR, WHICHEVER IS GREATER.

IN CIRCULAR TANKS DESIGNED FOR RING TENSION, THE LOCATION OF SPLICES SHOULD BE STAGGERED. ADJACENT HOOP REINFORCING SPLICES SHOULD BE STAGGERED HORIZONTALLY (CENTER OF LAP TO CENTER OF LAP) BY NOT LESS THAN ONE LAP LENGTH NOR 3 FEET AND SHOULD NOT COINCIDE IN VERTICAL ARRAYS MORE FREQUENTLY THAN EVERY THIRD BAR.

3 LAP SPLICE AND EMBEDMENT LENGTH TABLE

SCALE: NO SCALE

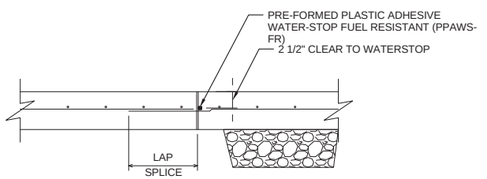

4 CONSTRUCTION JOINT FOR SLAB ON GRADE

SCALE: NO SCALE

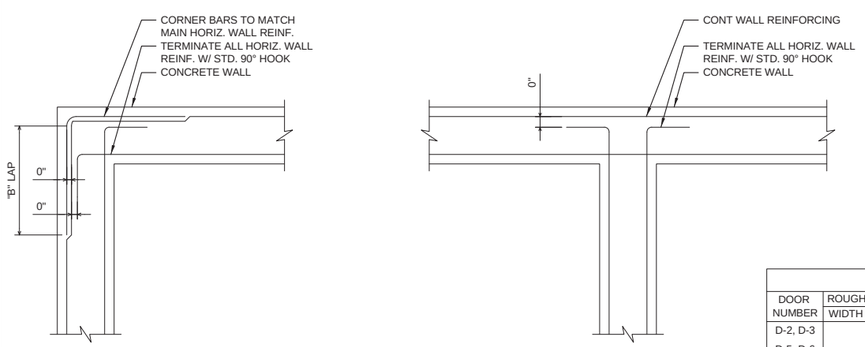

NOTES:
1. SEE PLANS AND SECTIONS FOR WALL INFORMATION.
2. VERTICAL REINFORCEMENT NOT SHOWN FOR CLARITY.
3. FOR ALL STRUCTURES UNLESS NOTED OTHERWISE.

5 TYPICAL CORNER REINFORCEMENT DETAIL

SCALE: NO SCALE

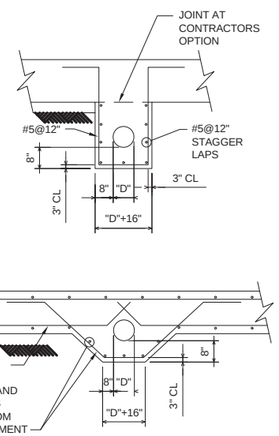

NOTES:
1. BOTTOM REINFORCEMENT TO BE CONTINUOUS WHERE POSSIBLE.
2. FOR PIPE SIZE "D" AND ELEVATION, SEE MECHANICAL DRAWINGS.
3. ALL PIPES LOCATED BENEATH BASE SLABS SHALL BE ENCASED IN CONCRETE UNLESS OTHERWISE NOTED.

6 PIPE ENCASEMENT DETAIL

SCALE: NO SCALE

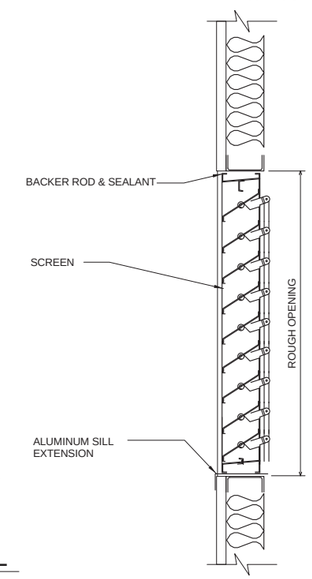

NOTE:
FOR LOUVERS SEE H DRAWINGS

7 LOUVER

SCALE: 1' = 1'-0"

DOOR SCHEDULE									
DOOR NUMBER	ROUGH OPENING		DOOR TYPE	FRAME TYPE	DETAILS		U.L. LABEL	HARDWARE SET	REMARKS
	WIDTH	HEIGHT			HEAD	JAMB			
D-2, D-3 D-5, D-6 D-7, D-8 D-9, D-10	3'-0"	7'-2"	1	HM	A	A	-	1	24" X 24" VISION PANEL
D-1	12'-0"	12'-0"	3	HM	A	A	-	1	OVERHEAD COILING DOOR
D-4	6'-4"	7'-2"	2	HM	A	A	-	1	24" X 24" VISION PANEL

HM - HOLLOW METAL

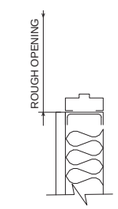

8 DOOR JAMB

SCALE: NO SCALE

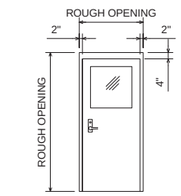

9 DOOR TYPE 1

SCALE: NO SCALE

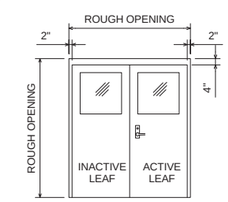

10 DOOR TYPE 2

SCALE: NO SCALE

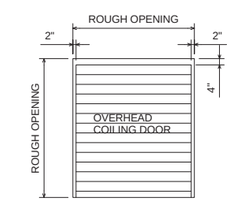

11 DOOR TYPE 3

SCALE: NO SCALE

- DRAFT -
NOT FOR CONSTRUCTION

ARCADIS

No.	Date	DESCRIPTION	GM/SPEC	DWN	CHKD	SUPV	APVD BY
0	2/2/15	SUPPLEMENTAL PRE-FINAL (90%) DESIGN		CMW	MSL	JB	RAK

REVISIONS

APPROVED BY: SO; SUPV JB; DSGN MSL; DWN CMW; CHKD MSL; OK RAK; DATE 2/2/15; SCALES NONE or AS SHOWN

TOPOCK GROUNDWATER REMEDIATION PROJECT

WORKSHOP BUILDING TYPICAL DETAILS

GAS TRANSMISSION & DISTRIBUTION
PACIFIC GAS AND ELECTRIC COMPANY
SAN FRANCISCO, CALIFORNIA

MICROFILM
BILL OF MATL
DWG LIST
SUPSDS
SUPSD BY
SHEET NO. of SHEETS: S-15-12
REV 1

1/16/2015 2:37:38 PM
C:\Users\cwancata\Documents\Topok Workshop Building_Structural_cwancata.rvt

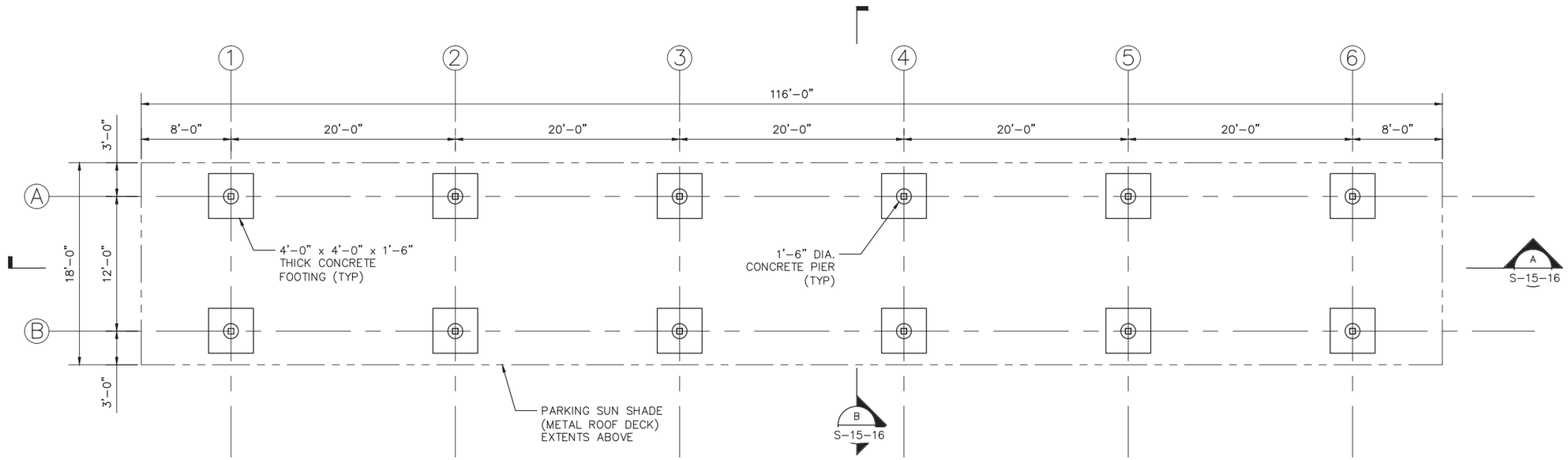

PARKING SUN SHADE - FOUNDATION PLAN

3/16" = 1'-0"

BUILDING CODE DESIGN LOADS:

1. DESIGN CODES: 2013 CALIFORNIA BUILDING CODE
   2012 INTERNATIONAL BUILDING CODE
   ASCE 7-10

2. RISK CATEGORY: II

3. ROOF LOADING:
   ROOF LIVE LOAD 20 PSF
   ROOF MAXIMUM DEAD LOAD * 12.5 PSF
   ROOF MINIMUM DEAD LOAD 2.5 PSF

* ROOF MAXIMUM DEAD LOAD ASSUMES 10 PSF MAXIMUM DEAD LOAD FROM SOLAR PANELS & SOLAR PANEL FRAMING

4. SNOW LOADING: N/A

5. WIND LOADING:
   BASIC WIND SPEED (3 SECOND GUST) V = 110 MPH – ULTIMATE OR MINIMUM NET WIND PRESSURE, Pnet = 20 PSF WHICHEVER IS GREATER
   WIND IMPORTANCE FACTOR – Iw – 1.0
   WIND EXPOSURE C
   ENCLOSURE – OPEN
   COMPONENTS & CLADDING LOADS (36 SQUARE FEET):
   ROOF ZONE 1 THROUGH 3 24.0 PSF / – 24.3 PSF
   WINDWARD FASCIA 33.5 PSF
   LEEWARD FASCIA –22.4 PSF

6. SEISMIC CRITERIA:
   SEISMIC IMPORTANCE FACTOR – Ie – 1.0
   SEISMIC DESIGN CATEGORY – C
   SEISMIC SITE CLASS – D
   MAPPED SPECTRAL RESPONSE ACCELERATIONS – Ss = 0.230; S1 = 0.120
   SPECTRAL RESPONSE COEFFICIENTS – Sds = 0.245; Sd1 = 0.186
   SEISMIC FORCE RESISTING SYSTEMS: ORDINARY STEEL MOMENT FRAME
   RESPONSE MODIFICATION FACTOR – R = 3.5
   SEISMIC RESPONSE COEFFICIENT – Cs = 0.070
   DESIGN BASE SHEAR = 2.75 KIPS
   ANALYSIS PROCEDURE – EQUIVALENT LATERAL FORCE

7. FOUNDATION DESIGN:
   BASED UPON 2,000 PSF ALLOWABLE BEARING PRESSURE IN CONFORMANCE WITH CBC TABLE 1806.2 FOR CLASSIFICATION(S) SW, SP, SM, SC, GM AND/OR GC. A LICENSED GEOTECHNICAL ENGINEER SHALL PROVIDE SUBGRADE COMPACTION AND PREPARATION REQUIREMENTS, AND SHALL INSPECT THE EXCAVATIONS AND CONFIRM THAT 2,000 PSF BEARING IS ALLOWED FOR THE FOUNDATIONS. WHEN ENGINEERED FILL IS REQUIRED BY THE GEOTECHNICAL ENGINEER, IT SHALL BE TESTED AND INSPECTED BY THE GEOTECHNICAL ENGINEER.

FOUNDATION NOTES:

1. IF THE BUILDING OFFICIAL OR GEOTECHNICAL ENGINEER DETERMINES THAT EXPANSIVE SOILS OR OTHER GEOLOGIC ISSUES OF CONCERN MAY BE PRESENT, THEN HE/SHE MAY REQUIRE THAT SPECIAL PROVISIONS BE MADE TO THE FOUNDATION DESIGN TO SAFEGUARD AGAINST DAMAGE DUE TO THE EXPANSIVENESS OR OTHER GEOLOGIC ISSUES. IF THIS BECOMES THE SITUATION THEN ALL FOUNDATION CONSTRUCTION MUST BE HALTED AND THE GEOTECHNICAL ENGINEER SHALL PROVIDE A GEOTECHNICAL REPORT WITH RECOMMENDATIONS IN CONSIDERATION OF THE CONDITIONS.

2. REFER TO THE GENERAL NOTES AND STRUCTURAL SPECIFICATIONS FOR ADDITIONAL REQUIREMENTS.

3. STRUCTURAL OBSERVATIONS OF CONSTRUCTION ARE RECOMMENDED (PER CBC SECTION 1702), SO AS TO OBSERVE THE PROGRESS AND QUALITY OF THE CONTRACTOR'S WORK AND TO DETERMINE IF THE WORK IS PROCEEDING IN GENERAL ACCORDANCE WITH THE CONSTRUCTION DOCUMENTS.

4. REINFORCING STEEL: ASTM A615, 60KSI YIELD GRADE, DEFORMED BILLET STEEL BARS, UNFINISHED

5. PLACE, SUPPORT AND SECURE REINFORCEMENT AGAINST DISPLACEMENT. DO NOT DEVIATE FROM REQUIRED POSITION.

6. AGGREGATE BASE MATERIAL: TO BE CRUSHED GRAVEL MEETING THE FOLLOWING GRADATION AND COMPACTED TO 95% MAXIMUM DRY DENSITY OF MODIFIED PROCTOR.

SIEVE SIZE	TOTAL PERCENT PASSING
2 INCH	100
1 INCH	70 TO 100
3/4 INCH	50 TO 90
NO. 4	30 TO 60
NO. 30	9 TO 33
NO. 200	0 TO 6

- DRAFT -
NOT FOR CONSTRUCTION

ETIC ENGINEERING

ARCADIS

NO.	DATE	DESCRIPTION	GM/SPEC	DWN	CHKD	SUPV	APVD BY
0	2/2/15	SUPPLEMENTAL PRE-FINAL (90%) DESIGN		CMW	MSL	JPB	RAK

REVISIONS

APPROVED BY: JEF

SO	
SUPV	JPB
DSGN	CMW
DWN	CMW
CHKD	MSL
OK RAK	
DATE	2/2/15
SCALES	

TOPOCK GROUNDWATER REMEDIATION PROJECT

PARKING SUN SHADE
FOUNDATION PLAN

GAS TRANSMISSION & DISTRIBUTION
PACIFIC GAS AND ELECTRIC COMPANY
SAN FRANCISCO, CALIFORNIA

MICROFILM
BILL OF MATL
DWG LIST
SUPSDS 1
SUPSD BY
SHEET NO. of SHEETS
S-15-13
REV 1

N1808

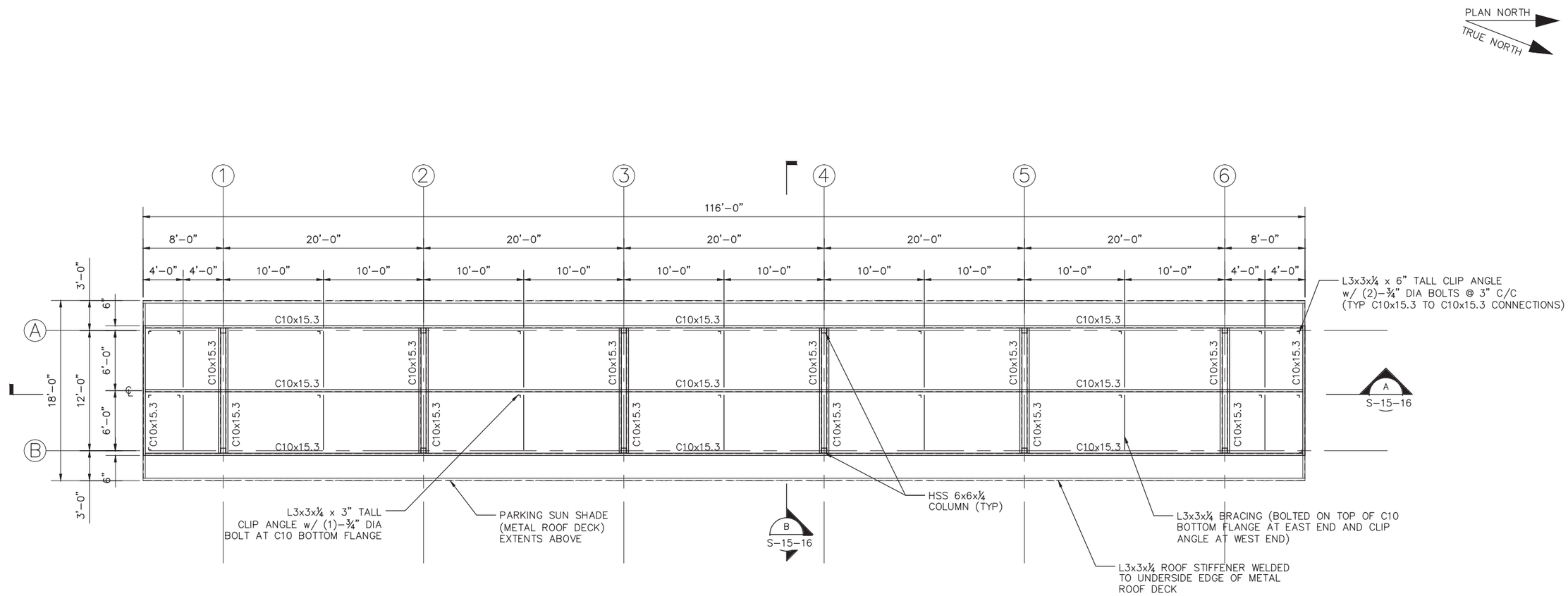

PARKING SUN SHADE - ROOF FRAMING PLAN

3/16" = 1'-0"

STRUCTURAL STEEL NOTES:

1. ALL STRUCTURAL STEEL SHALL BE HOT-DIPPED GALVANIZED TO ASTM A123 AND HARDWARE TO BE GALVANIZED PER ASTM A153. THEN AFTER ERECTED, ALL STRUCTURAL STEEL TO BE PRIMED PROPERLY AND FINISH PAINTED PER SPECIFICATION 09 90 00.

- DRAFT -
NOT FOR CONSTRUCTION

ETIC ENGINEERING

ARCADIS

NO.	DATE	DESCRIPTION	GM/SPEC	DWN	CHKD	SUPV	APVD BY
0	2/2/15	SUPPLEMENTAL PRE-FINAL (90%) DESIGN		CMW	MSL	JPB	RAK

REVISIONS

APPROVED BY: JEF

SO
SUPV JPB
DSGN CMW
DWN CMW
CHKD MSL
OK RAK
DATE 2/2/15
SCALES

TOPOCK GROUNDWATER REMEDIATION PROJECT

PARKING SUN SHADE ROOF FRAMING PLAN

GAS TRANSMISSION & DISTRIBUTION
PACIFIC GAS AND ELECTRIC COMPANY
SAN FRANCISCO, CALIFORNIA

MICROFILM
BILL OF MATL
DWG LIST
SUPSDS
SUPSD BY
SHEET NO. of SHEETS
S-15-14
REV 1

N1808

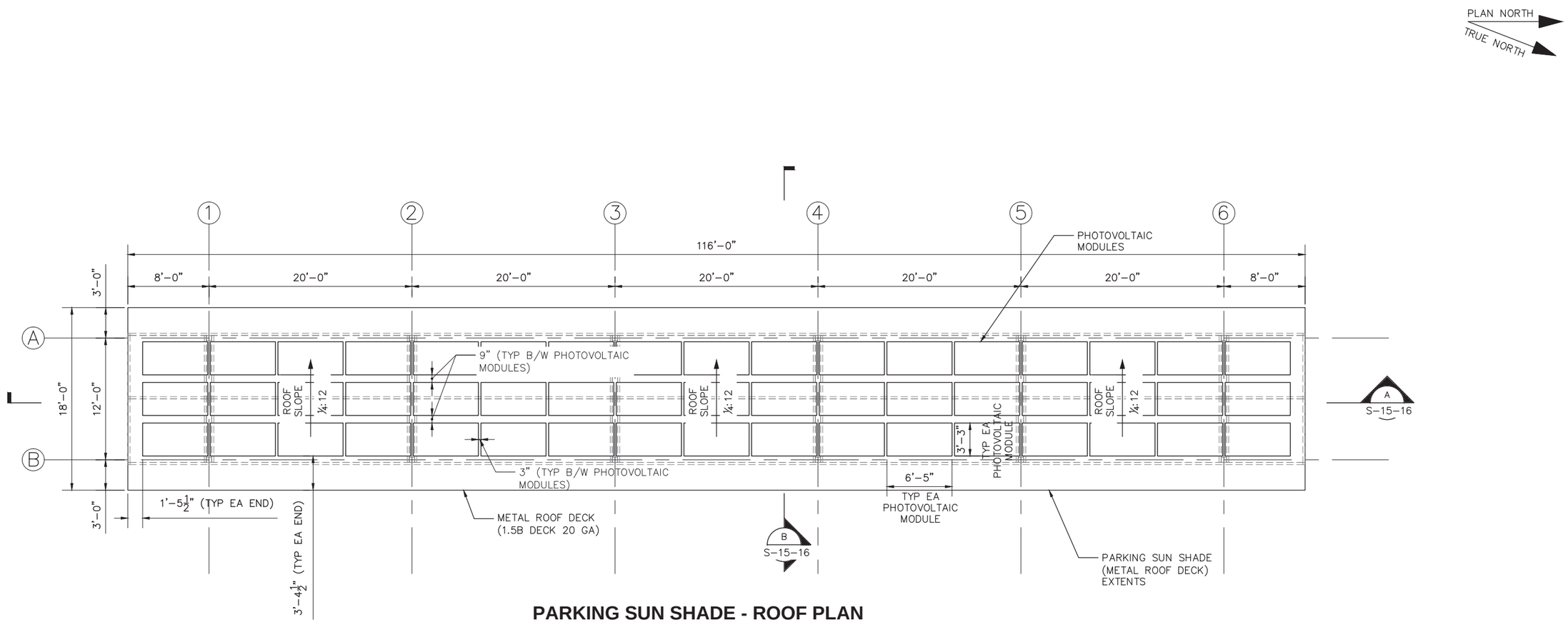

PARKING SUN SHADE - ROOF PLAN

3/16" = 1'-0"

METAL DECK NOTES:

METAL DECK SCHEDULE								
TYPE	DEPTH (IN)	PANEL WIDTH (IN)	DESIGN THICKNESS (IN)	MIN. YIELD STRENGTH Fy (KSI)	MIN. (+) S (IN^3/FT)	MIN. I (IN^4/FT)	MIN. DIAPHRAGM SHEAR CAPACITY (LBS/FT)	FINISH
ROOF DECK	1½	36	0.0358	33 (ASTM A653)	0.234	0.201	400	GALVANIZED*

* GALVANIZING SHALL CONFORM TO ASTM A924 WITH COATING CLASS OF G90 AS DEFINED IN ASTM A623.

1. DECK UNIT ANCHORAGE TO STEEL SUPPORTING MEMBERS UTILIZING ARC SPOT PUDDLE WELDS OR MECHANICAL FASTENERS BASED ON THE FOLLOWING MINIMUMS:
   A. ARC SPOT PUDDLE WELDS SHALL BE ⅝" MINIMUM VISIBLE DIAMETER WITH THE ATTACHMENT PATTERN OF 36/7 OR
   B. #12-24 T5 TEKS (SELF-DRILLING FASTENERS BY ITW BUILDEX) WITH THE ATTACHMENT PATTERN OF 36/7.
2. MINIMUM SIDE LAP ATTACHMENT SHALL BE 6 FASTENERS PER SPAN AND SHALL BE ARC SPOT PUDDLE WELDS OR MECHANICAL FASTENERS:
   A. ARC SPOT PUDDLE WELD SHALL BE ⅝" MINIMUM VISIBLE DIAMETER OR
   B. #10 TEK SCREW
3. MINIMUM EDGE ATTACHMENT SHALL BE 6" AND SHALL BE ⅝" MINIMUM VISIBLE DIAMETER.
4. DECKING SHALL BE INSTALLED AS 1 COMPLETE UNIT FROM ONE END TO OTHER END OVER 18'-0" COVERED PARKING AREA WIDTH.
5. IF ARC SPOT PUDDLE WELDS ARE UTILIZED FOR METAL DECK ATTACHMENTS, THEY MUST BE TOUCHED UP WITH HOT-DIP GALVANIZED COATING REPAIR PRODUCT SPECIFIED IN SPECIFICATION 05 12 00, ALONG WITH PV SOLAR PANEL SUPPORT FRAMING BASE BRACKET WELDED OR BOLTED CONNECTIONS TO METAL DECK, BEFORE PRIMING AND FINISH PAINTING.
6. ALL STRUCTURAL STEEL TO BE PRIMED PROPERLY AND FINISH PAINTED PER SPECIFICATION 09 90 00.

PHOTOVOLTAIC (PV) SOLAR PANEL NOTES:

1. PV SOLAR PANEL UNITS ARE TO BE PROVIDED ON TOP OF THE METAL ROOF DECK OF THE COVERED PARKING STRUCTURE. THE PV SOLAR PANEL UNIT MANUFACTURER IS RESPONSIBLE FOR THE FOLLOWING:
   A. THE PV SOLAR PANEL UNIT MANUFACTURER IS RESPONSIBLE FOR PROVIDING AND DESIGNING ALL ITEMS (PV SOLAR PANELS/PANEL SUPPORT FRAMING/ROOF CLIPS (ATTACHING TO METAL ROOF DECK)/HARDWARE/ETC.). THIS INCLUDES THE STRUCTURAL FRAMING AND HARDWARE ATTACHING TO THE BACK OF THE PV SOLAR PANELS AND SPANNING TO EACH ROOF CLIP (ATTACHING TO METAL ROOF DECK), THE CONNECTION OF THE PV SOLAR PANEL UNIT FRAMING TO THE ROOF CLIP (ATTACHING TO METAL ROOF DECK), AND THE ROOF CLIP AND ITS BOLTED/WELDED CONNECTION TO THE METAL ROOF DECK ITSELF.
   B. THE PV SOLAR PANEL UNIT MANUFACTURER MUST PROVIDE THE FOLLOWING:
      1. SUBMIT P.E. (REGISTERED IN THE STATE OF CALIFORNIA) SIGNED AND SEALED DETAILS/DESIGN CALCULATIONS/DESIGN LOADS (DEAD/LIVE/SEISMIC/WIND LOADS) ACTING ON THE PV SOLAR PANEL UNITS, PANEL SUPPORT FRAMING, ROOF CLIPS AND ITS BOLTED/WELDED CONNECTION TO METAL ROOF DECK, AND HARDWARE.

- DRAFT -
NOT FOR CONSTRUCTION

ETIC ENGINEERING

ARCADIS

NO.	DATE	DESCRIPTION	GM/SPEC	DWN	CHKD	SUPV	APVD BY
0	2/2/15	SUPPLEMENTAL PRE-FINAL (90%) DESIGN	CMW	MSL	JPB	RAK	

REVISIONS

APPROVED BY: JEF

SO
SUPV JPB
DSGN CMW
DWN CMW
CHKD MSL
OK RAK
DATE 2/2/15
SCALES

TOPOCK GROUNDWATER REMEDIATION PROJECT

PARKING SUN SHADE ROOF PLAN

GAS TRANSMISSION & DISTRIBUTION
PACIFIC GAS AND ELECTRIC COMPANY
SAN FRANCISCO, CALIFORNIA

MICROFILM
BILL OF MATL
DWG LIST
SUPSDS 1
SUPSD BY
SHEET NO. of SHEETS
S-15-15
REV 1

N1808

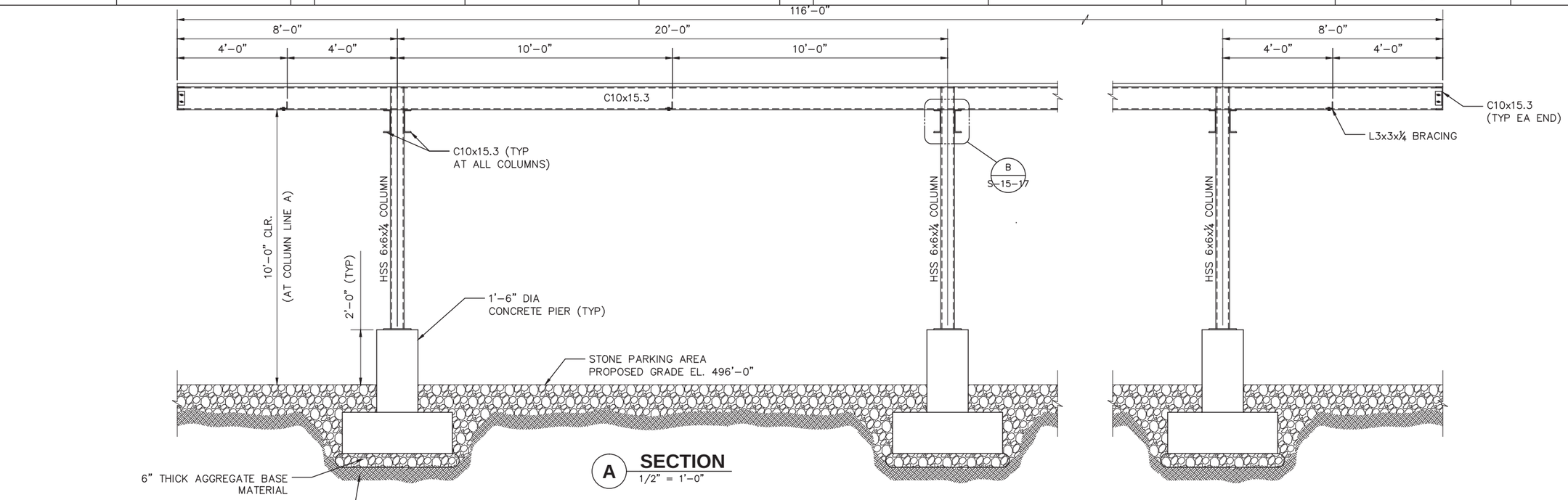

A SECTION
1/2" = 1'-0"

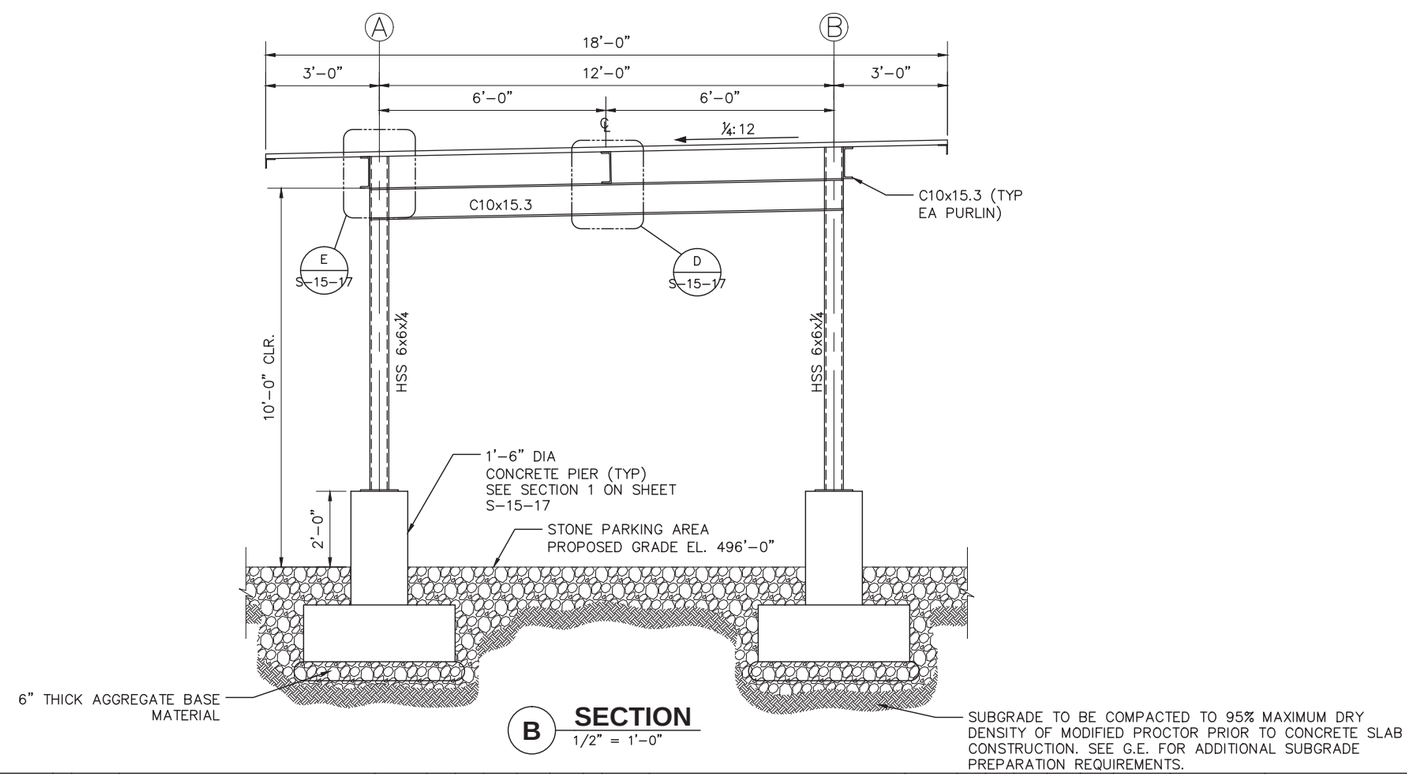

B SECTION
1/2" = 1'-0"

- DRAFT -
NOT FOR CONSTRUCTION

ETIC ENGINEERING

ARCADIS

NO.	DATE	DESCRIPTION	GM/SPEC	DWN	CHKD	SUPV	APVD BY
0	2/2/15	SUPPLEMENTAL PRE-FINAL (90%) DESIGN		CMW	MSL	JPB	RAK

REVISIONS

APPROVED BY: JEF

SO	
SUPV	JPB
DSGN	CMW
DWN	CMW
CHKD	MSL
OK RAK	
DATE	2/2/15
SCALES	

TOPOCK GROUNDWATER REMEDIATION PROJECT

PARKING SUN SHADE SECTIONS

GAS TRANSMISSION & DISTRIBUTION
PACIFIC GAS AND ELECTRIC COMPANY
SAN FRANCISCO, CALIFORNIA

MICROFILM	
BILL OF MATL	
DWG LIST	
SUPSDS	1
SUPSD BY	
SHEET NO. of SHEETS	
S-15-16	REV 1

N1808

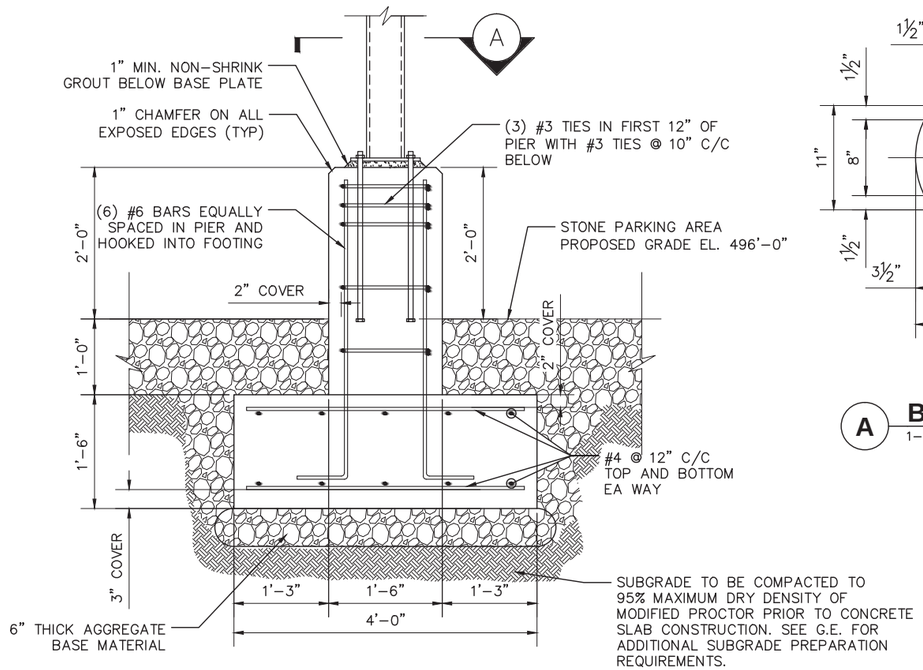

1 SECTION
1" = 1'-0"

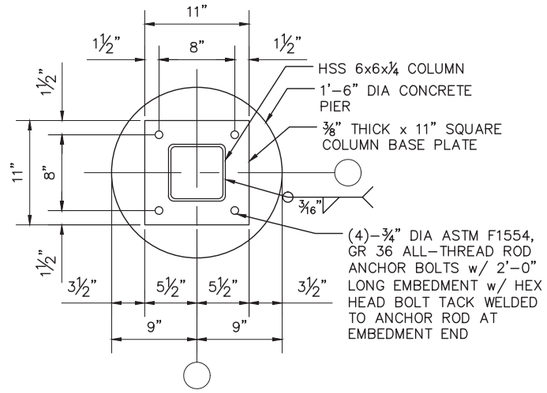

A BASE PLATE DETAIL
1-1/2" = 1'-0"

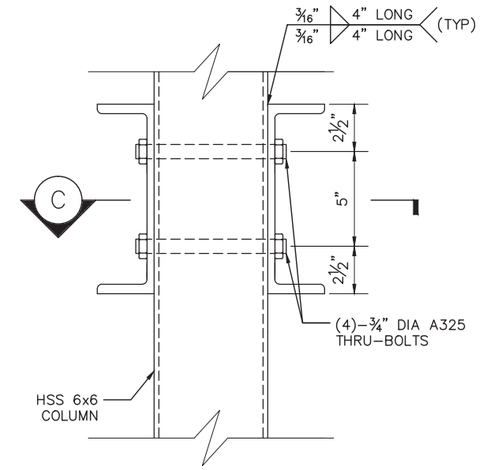

B BEAM TO COLUMN CONNECTION
3" = 1'-0"

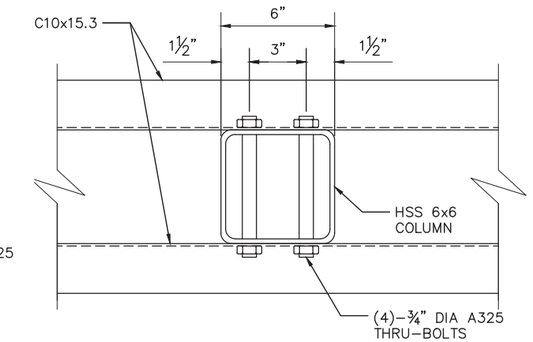

C BEAM TO COLUMN TOP PLAN
3" = 1'-0"

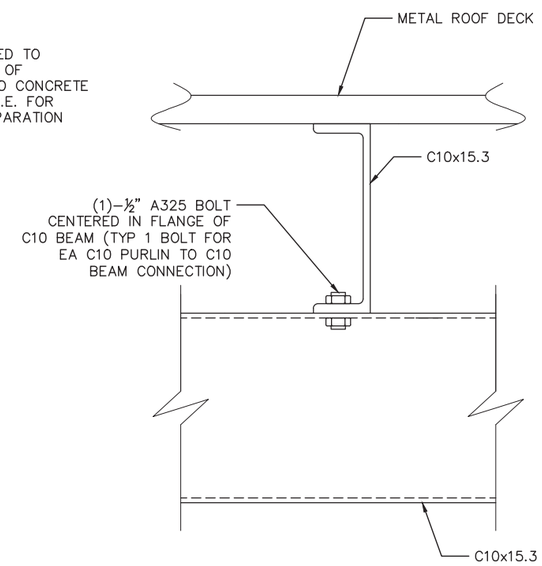

D PURLIN TO BEAM CONNECTION
3" = 1'-0"

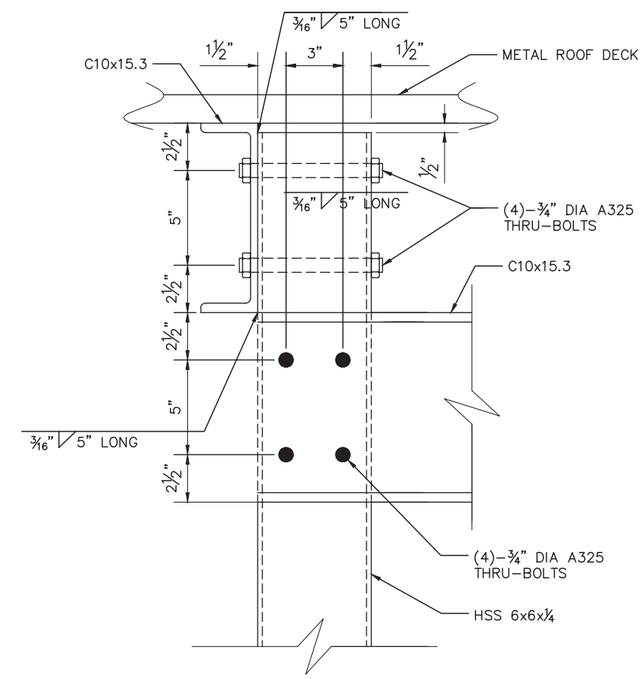

E PURLIN TO COLUMN CONNECTION
3" = 1'-0"

- DRAFT -
NOT FOR CONSTRUCTION

ETIC ENGINEERING

ARCADIS

NO.	DATE	DESCRIPTION	GM/SPEC	DWN	CHKD	SUPV	APVD BY
0	2/2/15	SUPPLEMENTAL PRE-FINAL (90%) DESIGN		CMW	MSL	JPB	RAK

REVISIONS

APPROVED BY: JEF

SO	
SUPV	JPB
DSGN	CMW
DWN	CMW
CHKD	MSL
OK	RAK
DATE	2/2/15
SCALES	

TOPOCK GROUNDWATER REMEDIATION PROJECT

PARKING SUN SHADE DETAILS

GAS TRANSMISSION & DISTRIBUTION
PACIFIC GAS AND ELECTRIC COMPANY
SAN FRANCISCO, CALIFORNIA

MICROFILM	
BILL OF MATL	
DWG LIST	
SUPSDS	1
SUPSD BY	
SHEET NO. of SHEETS	
S-15-17	REV 1

N1808

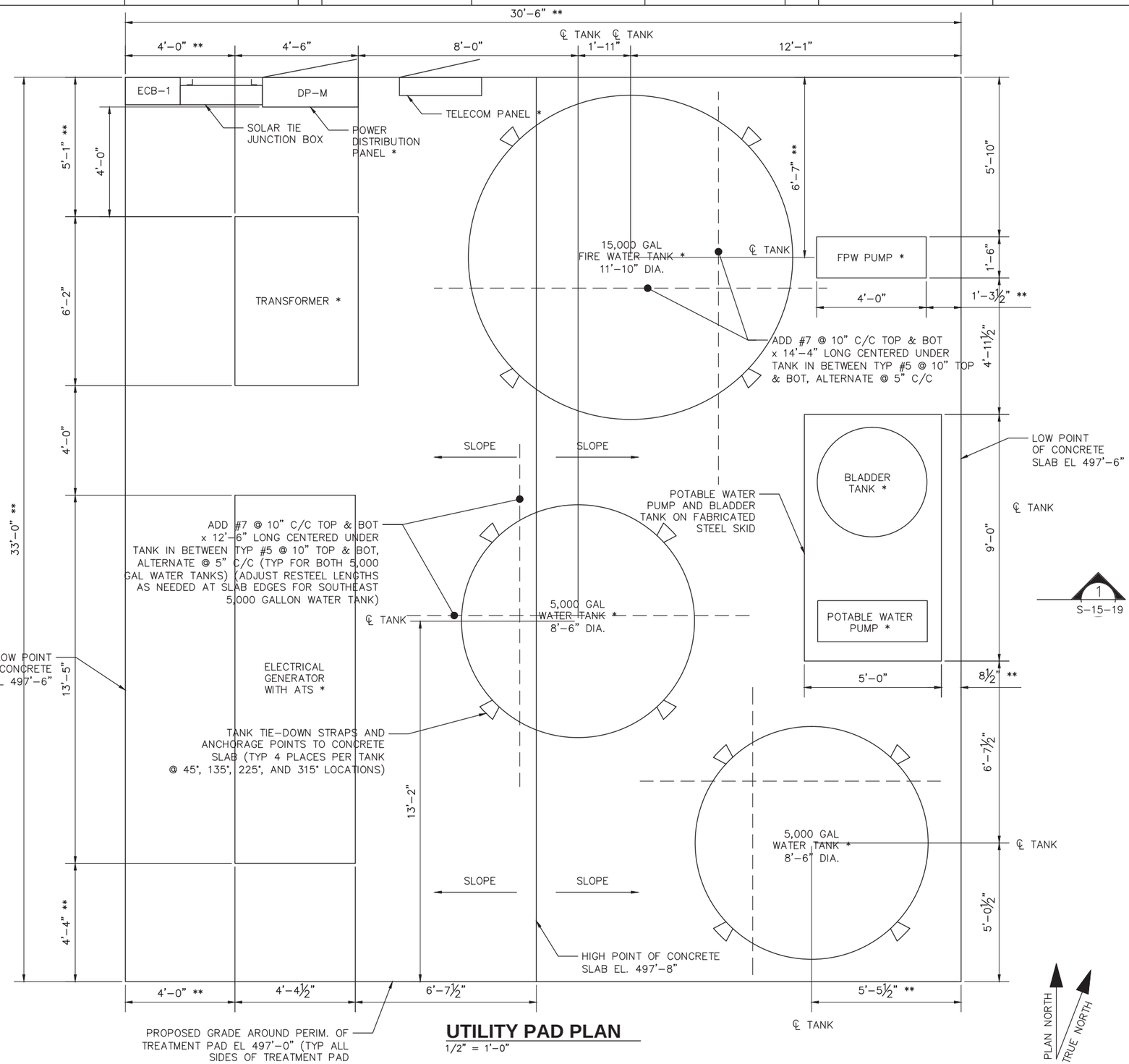

1
S-15-19

UTILITY PAD PLAN

1/2" = 1'-0"

FOUNDATION NOTES:

1. IF THE BUILDING OFFICIAL OR GEOTECHNICAL ENGINEER DETERMINES THAT EXPANSIVE SOILS OR OTHER GEOLOGIC ISSUES OF CONCERN MAY BE PRESENT, THEN HE/SHE MAY REQUIRE THAT SPECIAL PROVISIONS BE MADE TO THE FOUNDATION DESIGN TO SAFEGUARD AGAINST DAMAGE DUE TO THE EXPANSIVENESS OR OTHER GEOLOGIC ISSUES. IF THIS BECOMES THE SITUATION THEN ALL FOUNDATION CONSTRUCTION MUST BE HALTED AND THE GEOTECHNICAL ENGINEER SHALL PROVIDE A GEOTECHNICAL REPORT WITH RECOMMENDATIONS IN CONSIDERATION OF THE CONDITIONS.
2. REFER TO THE GENERAL NOTES AND STRUCTURAL SPECIFICATIONS FOR ADDITIONAL REQUIREMENTS.
3. STRUCTURAL OBSERVATIONS OF CONSTRUCTION ARE RECOMMENDED (PER CBC SECTION 1702), SO AS TO OBSERVE THE PROGRESS AND QUALITY OF THE CONTRACTOR'S WORK AND TO DETERMINE IF THE WORK IS PROCEEDING IN GENERAL ACCORDANCE WITH THE CONSTRUCTION DOCUMENTS.
4. REINFORCING STEEL: ASTM A615, 60KSI YIELD GRADE, DEFORMED BILLET STEEL BARS, UNFINISHED
5. PLACE, SUPPORT AND SECURE REINFORCEMENT AGAINST DISPLACEMENT. DO NOT DEVIATE FROM REQUIRED POSITION.
6. AGGREGATE BASE MATERIAL: TO BE CRUSHED GRAVEL MEETING THE FOLLOWING GRADATION AND COMPACTED TO 95% MAXIMUM DRY DENSITY OF MODIFIED PROCTOR.

SIEVE SIZE	TOTAL PERCENT PASSING
2 INCH	100
1 INCH	70 TO 100
3/4 INCH	50 TO 90
NO. 4	30 TO 60
NO. 30	9 TO 33
NO. 200	0 TO 6

FOUNDATION DESIGN:

BASED UPON 2,000 PSF ALLOWABLE BEARING PRESSURE IN CONFORMANCE WITH CBC TABLE 1806.2 FOR CLASSIFICATION(S) SW, SP, SM, SC, GM AND/OR GC. A LICENSED GEOTECHNICAL ENGINEER SHALL PROVIDE SUBGRADE COMPACTION AND PREPARATION REQUIREMENTS, AND SHALL INSPECT THE EXCAVATIONS AND CONFIRM THAT 2,000 PSF BEARING IS ALLOWED FOR THE FOUNDATIONS. WHEN ENGINEERED FILL IS REQUIRED BY THE GEOTECHNICAL ENGINEER, IT SHALL BE TESTED AND INSPECTED BY THE GEOTECHNICAL ENGINEER.

* VERIFY SIZE WITH APPROVED TANK, PUMP, TRANSFORMER, GENERATOR AND ELECTRICAL/COMMUNICATION PANEL MANUFACTURER'S SHOP DRAWINGS.

** CONCRETE DIMENSIONS TO BE VERIFIED PER APPROVED TANK, PUMP, TRANSFORMER, GENERATOR, AND ELECTRICAL/COMMUNICATIONS PANEL MANUFACTURER'S SHOP DRAWINGS.

CODE DESIGN LOADS:

1. DESIGN CODES: 2013 CALIFORNIA BUILDING CODE
   2012 INTERNATIONAL BUILDING CODE
   ASCE 7-10
2. RISK CATEGORY: IV
3. LIVE LOADS: 100 PSF
4. SNOW LOADING: N/A
5. FLOOD LOADS: N/A
6. WIND LOADS:
   BASIC WIND SPEED (3 SECOND GUST) V = 115 MPH – ULTIMATE OR MINIMUM NET WIND PRESSURE, Pnet = 20 PSF WHICHEVER IS GREATER
   WIND EXPOSURE C
7. SEISMIC LOADS:
   SEISMIC IMPORTANCE FACTOR – Ie – 1.5
   SEISMIC DESIGN CATEGORY – D
   SEISMIC SITE CLASS – D
   MAPPED SPECTRAL RESPONSE ACCELERATIONS – Ss = 0.230; S1 = 0.120
   SPECTRAL RESPONSE COEFFICIENTS – Sds = 0.245; Sd1 = 0.186
   ANALYSIS PROCEDURE – ASCE 7-10 CHAPTER 15 SEISMIC REQUIREMENTS FOR NON-BUILDING STRUCTURES FOR TANKS AND CHAPTER 13 SEISMIC DESIGN REQUIREMENTS FOR NON-STRUCTURAL COMPONENTS FOR PUMPS, TRANSFORMER, GENERATOR AND ELECTRICAL/ COMMUNICATIONS PANELS, AND FABRICATED STEEL SKID

- DRAFT -
NOT FOR CONSTRUCTION

ETIC ENGINEERING

ARCADIS

NO.	DATE	DESCRIPTION	GM/SPEC	DWN	CHKD	SUPV	APVD BY
0	2/2/15	SUPPLEMENTAL PRE-FINAL (90%) DESIGN		CMW	MSL	JPB	RAK

REVISIONS

APPROVED BY: JEF

SO	
SUPV	JPB
DSGN	CMW
DWN	CMW
CHKD	MSL
OK RAK	
DATE	2/2/15
SCALES	

TOPOCK GROUNDWATER REMEDIATION PROJECT

UTILITY PAD PLANS

GAS TRANSMISSION & DISTRIBUTION
PACIFIC GAS AND ELECTRIC COMPANY
SAN FRANCISCO, CALIFORNIA

MICROFILM
BILL OF MATL
DWG LIST
SUPSDS 1
SUPSD BY
SHEET NO. of SHEETS
S-15-18
REV 1

N1808

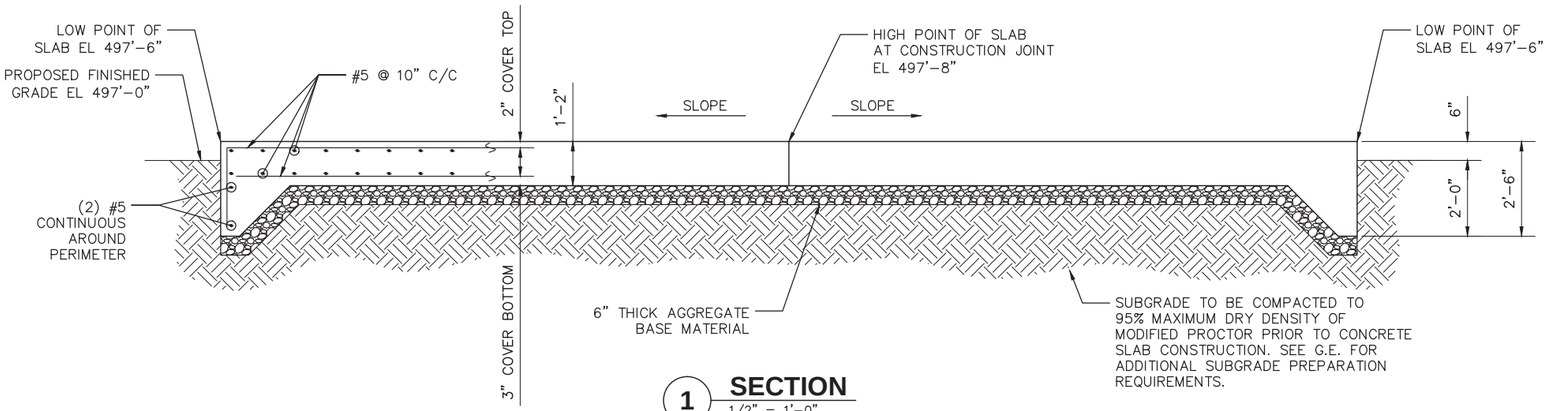

1 **SECTION**
1/2" = 1'-0"

NOTES:

1. 15,000 GALLON FIRE WATER TANK:
   1.1. TANK TIE-DOWN STRAPS AND ANCHORAGE TO CONCRETE SLAB (FOR SEISMIC AND WIND LOADS SHOWN ON SHEET S-15-18) ARE TO BE DESIGNED AND PROVIDED BY TANK MANUFACTURER. HOWEVER, A MINIMUM OF 4 TIE-DOWN STRAPS (EQUALLY SPACED AROUND PERIMETER) TO BE PROVIDED. EACH TIE-DOWN STRAP TO HAVE A MINIMUM OF (3)-¾" DIAMETER GALVANIZED ADHESIVE ANCHORS @ 8" C/C MINIMUM SPACING AND 10" MINIMUM EMBEDMENT (TANK MANUFACTURER TO DESIGN TIE-DOWN TO ADHESIVE ANCHOR CONNECTION). TANK MUST ALSO HAVE A MINIMUM OF (4)-L6x3½x5⁄16x11" LONG CLIP ANGLES LLV WITH (2)-3/4" DIAMETER GALVANIZED ADHESIVE ANCHORS @ 8" MINIMUM SPACING AND 10" MINIMUM EMBEDMENT IN EACH CLIP ANGLE. SPACE 4 CLIP ANGLES EQUALLY AROUND TANK PERIMETER.
   1.2. STRUCTURAL DESIGN OF FOUNDATION SLAB ASSUMES A 15,000 GALLON FIRE WATER TANK OF THE FOLLOWING GEOMETRY:
      1.2.1. APPROX 11'-10" DIA FLAT-BOTTOM TANK WITH ROUNDED ROOF TOP STARTING APPROX 18'-0" ABOVE TOP OF SLAB AND TOP OF ROOF AT APPROX 19'-3½" ABOVE TOP OF SLAB.
      1.2.2. TANK CAPACITY = 15,000 GALLONS WITH LIQUID SPECIFIC GRAVITY SIMILAR TO WATER.
      1.2.3. FRP TANK CONSTRUCTION WITH EMPTY WEIGHT = 2,500#.

2. 5,000 GALLON WATER TANK:
   2.1. TANK TIE-DOWN STRAPS AND ANCHORAGE TO CONCRETE SLAB (FOR SEISMIC AND WIND LOADS SHOWN ON SHEET S-15-18) ARE TO BE DESIGNED AND PROVIDED BY TANK MANUFACTURER. HOWEVER, A MINIMUM OF 4 TIE-DOWN STRAPS (EQUALLY SPACED AROUND PERIMETER) TO BE PROVIDED. EACH TIE-DOWN STRAP TO HAVE A MINIMUM OF (2)-¾" DIAMETER GALVANIZED ADHESIVE ANCHORS @ 8" C/C MINIMUM SPACING AND 10" MINIMUM EMBEDMENT (TANK MANUFACTURER TO DESIGN TIE-DOWN TO ADHESIVE ANCHOR CONNECTION). TANK MUST ALSO HAVE A MINIMUM OF (4)-L6x3½x5⁄16x8" LONG CLIP ANGLES LLV WITH (1)-3/4" DIAMETER GALVANIZED ADHESIVE ANCHOR WITH 10" EMBEDMENT IN EACH CLIP ANGLE. SPACE 4 CLIP ANGLES EQUALLY AROUND TANK PERIMETER.
   2.2. STRUCTURAL DESIGN OF FOUNDATION SLAB ASSUMES A 5,000 GALLON WATER TANK OF THE FOLLOWING GEOMETRY:
      2.2.1. APPROX 8'-6" DIA FLAT-BOTTOM TANK WITH ROUNDED ROOF TOP STARTING APPROX 11'-6" ABOVE TOP OF SLAB AND TOP OF ROOF AT APPROX 12'-9" ABOVE TOP OF SLAB.
      2.2.2. TANK CAPACITY = 5,000 GALLONS WITH LIQUID SPECIFIC GRAVITY SIMILAR TO WATER.
      2.2.3. FRP TANK CONSTRUCTION WITH EMPTY WEIGHT = 1,250#.

3. BLADDER TANK, TRANSFORMER, ELECTRICAL GENERATOR, PUMPS, ELECTRICAL/COMMUNICATION PANELS, AND FABRICATED STEEL SKID:
   3.1. EQUIPMENT ANCHORAGE TO FABRICATED STEEL SKID AND FABRICATED STEEL SKID TO CONCRETE SLAB (FOR SEISMIC AND WIND LOADS SHOWN ON S-15-18) ARE TO BE DESIGNED AND PROVIDED BY EQUIPMENT MANUFACTURER.

- DRAFT -
NOT FOR CONSTRUCTION

ETIC ENGINEERING

ARCADIS

NO.	DATE	DESCRIPTION	GM/SPEC	DWN	CHKD	SUPV	APVD BY
0	2/2/15	SUPPLEMENTAL PRE-FINAL (90%) DESIGN		CMW	MSL	JPB	RAK

REVISIONS

APPROVED BY: JEF

SO	
SUPV	JPB
DSGN	CMW
DWN	CMW
CHKD	MSL
OK RAK	
DATE	2/2/15
SCALES	

TOPOCK GROUNDWATER REMEDIATION PROJECT

UTILITY PAD DETAILS

GAS TRANSMISSION & DISTRIBUTION
PACIFIC GAS AND ELECTRIC COMPANY
SAN FRANCISCO, CALIFORNIA

MICROFILM	
BILL OF MATL	
DWG LIST	
SUPSDS	1
SUPSD BY	
SHEET NO. of SHEETS	
S-15-19	REV 1

N1808

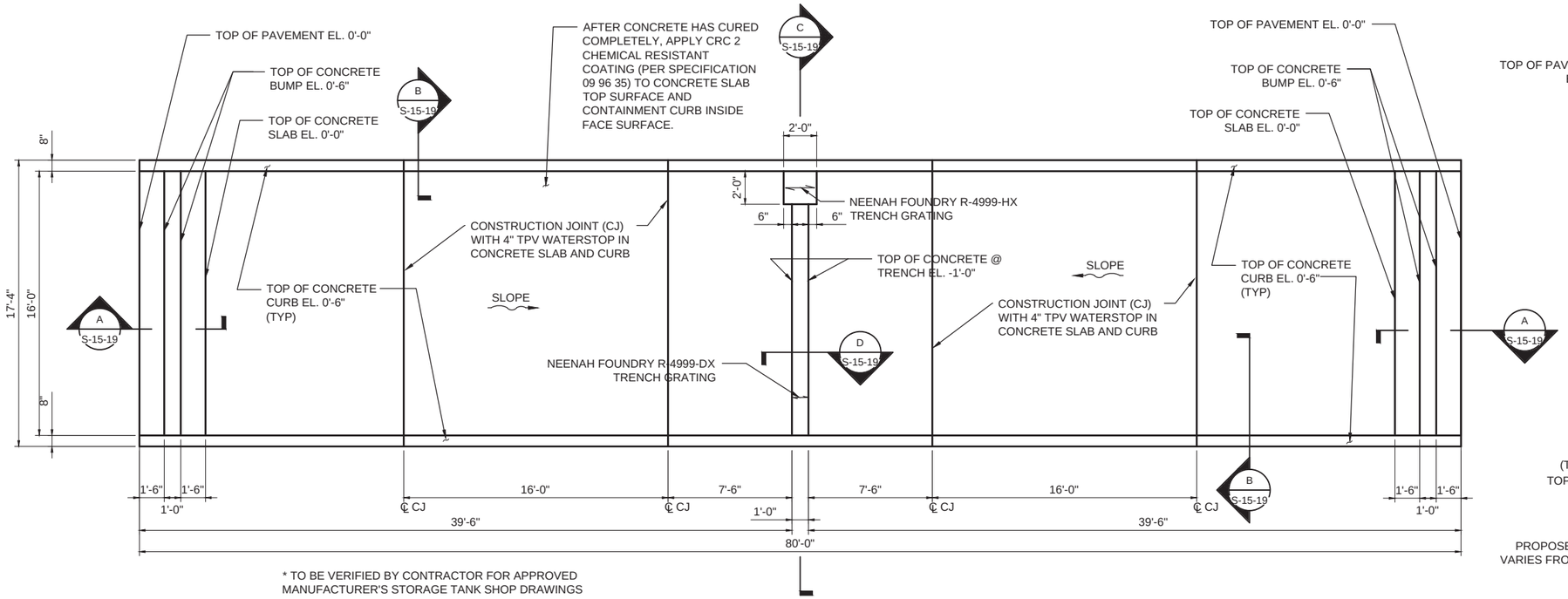

* TO BE VERIFIED BY CONTRACTOR FOR APPROVED MANUFACTURER'S STORAGE TANK SHOP DRAWINGS

CHQ DECONTAMINATION PAD

1/4" = 1'-0"

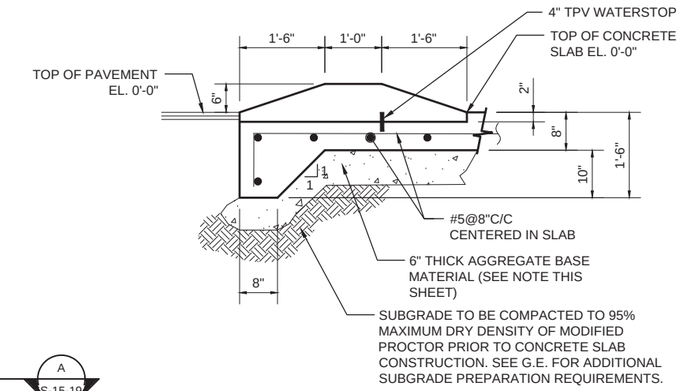

A SECTION

3/4" = 1'-0"

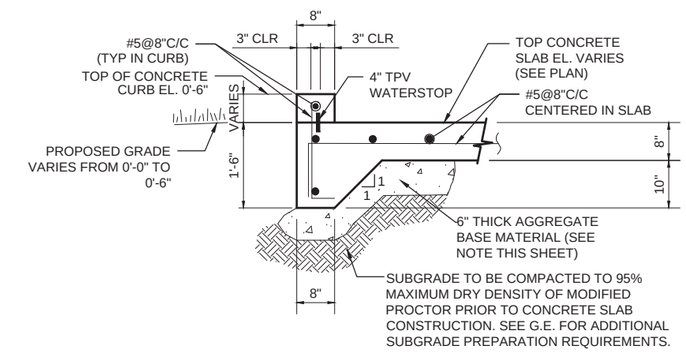

B SECTION

3/4" = 1'-0"

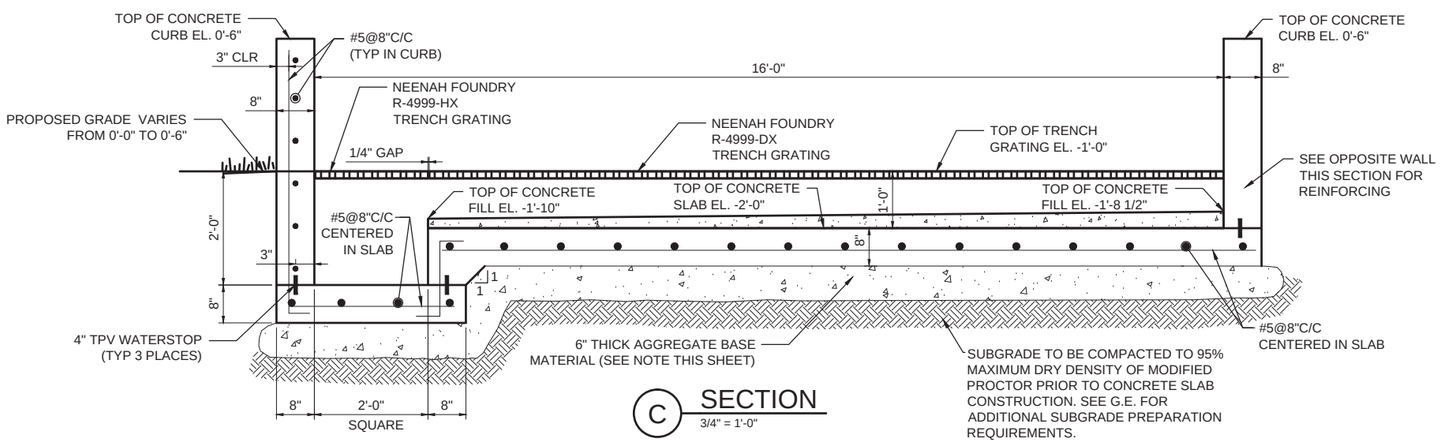

C SECTION

3/4" = 1'-0"

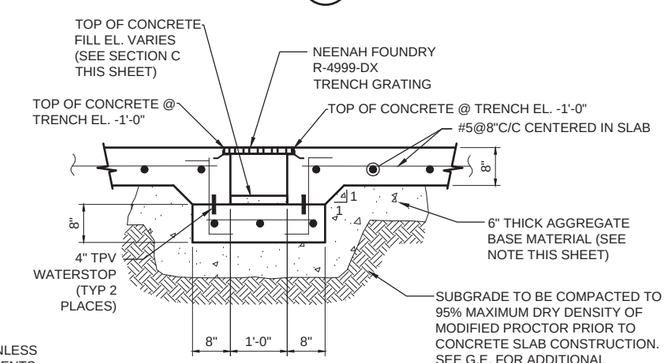

D SECTION

3/4" = 1'-0"

FOUNDATION NOTES:

- REFER TO THE GENERAL NOTES AND STRUCTURAL SPECIFICATIONS FOR ADDITIONAL REQUIREMENTS.
- FOUNDATION DESIGN IS BASED UPON 2,000 psf ALLOWABLE BEARING PRESSURE, IN CONFORMANCE WITH CBC TABLE 1806.2 FOR CLASSIFICATION(S) SW, SP, SM, SC, GM, AND/OR GC. A LICENSED GEOTECHNICAL ENGINEER SHALL PROVIDE SUBGRADE COMPACTION AND PREPARATION REQUIREMENTS, AND SHALL INSPECT THE EXCAVATIONS AND CONFIRM THAT 2,000psf BEARING IS ALLOWED FOR THE FOUNDATIONS. WHEN ENGINEERED FILL IS REQUIRED BY THE GEOTECHNICAL ENGINEER, IT SHALL BE TESTED AND INSPECTED BY THE GEOTECHNICAL ENGINEER.
- IF THE BUILDING OFFICIAL OR GEOTECHNICAL ENGINEER DETERMINES THAT EXPANSIVE SOILS OR OTHER GEOLOGIC ISSUES OF CONCERN MAY BE PRESENT, THEN HE/SHE MAY REQUIRE THAT SPECIAL PROVISIONS BE MADE TO THE FOUNDATION DESIGN TO SAFEGUARD AGAINST DAMAGE DUE TO THE EXPANSIVENESS OR OTHER GEOLOGIC ISSUES. IF THIS BECOMES THE SITUATION THEN ALL FOUNDATION CONSTRUCTION MUST BE HALTED AND THE GEOTECHNICAL ENGINEER SHALL PROVIDE A GEOTECHNICAL REPORT WITH RECOMMENDATIONS IN CONSIDERATION OF THE CONDITIONS.
- STRUCTURAL OBSERVATIONS OF CONSTRUCTION ARE RECOMMENDED (PER CBC SECTION 1702), SO AS TO OBSERVE THIS PROGRESS AND QUALITY OF THE CONTRACTOR'S WORK AND TO DETERMINE IF THE WORK IS PROCEEDING IN GENERAL ACCORDANCE WITH THE CONSTRUCTION DOCUMENTS.
- TPV WATERSTOP: WATERSTOP SHALL BE 4" THERMOPLASTIC VULCANIZATE (TPV) SERRATED WITH CENTER BULB UNLESS NOTED OTHERWISE ON DRAWINGS. WATERSTOP TO BE WELDED IN ACCORDANCE WITH MANUFACTURER REQUIREMENTS. MANUFACTURED BY JP SPECIALTIES, INC. TYPE JP436 OR AS APPROVED.
- REINFORCING STEEL: ASTM A615, 60KSI YIELD GRADE, DEFORMED BILLET STEEL BARS, UNFINISHED
- PLACE, SUPPORT AND SECURE REINFORCEMENT AGAINST DISPLACEMENT. DO NOT DEVIATE FROM REQUIRED POSITION.
- AGGREGATE BASE MATERIAL: TO BE CRUSHED GRAVEL MEETING THE FOLLOWING GRADATION AND COMPACTED TO 95% MAXIMUM DRY DENSITY OF MODIFIED PROCTOR.

SIEVE SIZE	TOTAL PERCENT PASSING	SIEVE SIZE	TOTAL PERCENT PASSING
2 INCH	100	NO. 4	30 TO 60
1 INCH	70 TO 100	NO. 30	9 TO 33
3/4 INCH	50 TO 90	NO. 200	0 TO 6

0 1' 2' 3' 4'
SCALE: 3/4"=1'-0"

0 4' 8' 12'
SCALE: 1/4"=1'-0"

- DRAFT -
NOT FOR CONSTRUCTION

ARCADIS

NO.	DATE	DESCRIPTION	GM/SPEC	DWN	CHKD	SUPV	APVD BY
0	2/2/15	PRE-FINAL (90%) DESIGN	AJW	MSL	JPB	JEF	

REVISIONS

APPROVED BY: JEF

SO	
SUPV	JPB
DSGN	MSL
DWN	AJW
CHKD	JPB
OK	JEF
DATE	2/2/15
SCALES	

TOPOCK GROUNDWATER REMEDIATION PROJECT

DECONTAMINATION PAD PLANS AND DETAILS

GAS TRANSMISSION & DISTRIBUTION
PACIFIC GAS AND ELECTRIC COMPANY
SAN FRANCISCO, CALIFORNIA

MICROFILM
BILL OF MATL
DWG LIST
SUPSDS
SUPSD BY
SHEET NO. of SHEETS
S-15-20
REV 1

N1808

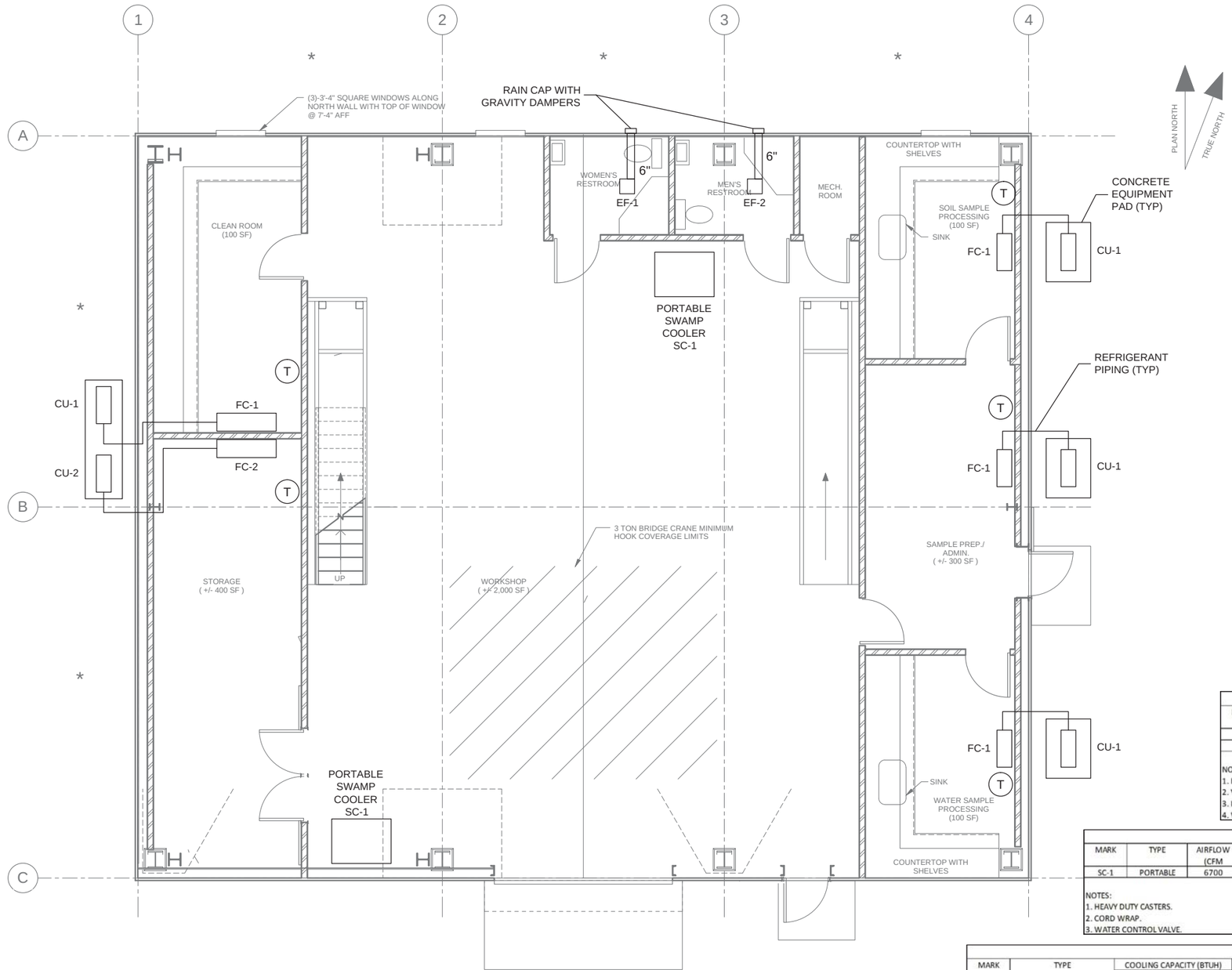

1 HVAC PLAN
1/4"=1'-0"

NOTES:
1. MOUNT BOTTOM OF FAN COIL UNITS (FC) 7'-0" AFF.
2. CONDENSATE PIPING FROM FAN COIL UNITS (FC) DISCHARGE TO EXTERIOR OF BUILDING.
3. MOUNT RESTROOM EXHAUST FANS FROM UNDERSIDE OF MEZZANINE. SHALL BE INTERLOCKED WITH LIGHT SWITCH.

EXHAUST FAN SCHEDULE

MARK	TYPE	AIRFLOW (CFM)	E.S.P. (INCHES W.C.)	DRIVE	ELECTRICAL W	ELECTRICAL V/PH/HZ	MANUFACTURER	MODEL	NOTES
EF-1	CEILING CENTRIFUGAL	100	0.25	DIRECT	38	115/1/60	LOREN COOK	GC-148	1,2,3,4
EF-2	CEILING CENTRIFUGAL	100	0.25	DIRECT	38	115/1/60	LOREN COOK	GC-148	1,2,3,4

NOTES:
1. INTEGRAL NEMA 3R DISCONNECT SWITCH.
2. VIBRATION ISOLATORS.
3. INTEGRAL MOUNTED SOLID STATE SPEED CONTROLLER.
4. WALL CAP WITH GRAVITY BACKDRAFT DAMPER.

SWAMP COOLER SCHEDULE

MARK	TYPE	AIRFLOW (CFM	COOLING CAPACITY (SQFT)	WATER RESERVOIR CAPACITY (GALLONS)	FAN SPEED	UNIT DIMENSIONS (HxWxD)	WEIGHT (LBS)	POWER V/PH/HZ	MANUFACTUER	MODEL	NOTES
SC-1	PORTABLE	6700	1800	14	VARIABLE	53"x50"x25"	155	115/1/60	PORT-A-COOL	PAC2K24HPVS	1,2,3

NOTES:
1. HEAVY DUTY CASTERS.
2. CORD WRAP.
3. WATER CONTROL VALVE.

DUCTLESS SPLIT SYSTEM HEAT PUMP SCHEDULE

MARK	TYPE	COOLING CAPACITY (BTUH) RATED	COOLING CAPACITY (BTUH) MINIMUM	HEATING CAPACITY (BTUH) RATED	HEATING CAPACITY (BTUH) MINIMUM	REFRIGERANT	ELECTRICAL V/PH/HZ	MANUFACTURER	MODEL FC	MODEL CU	NOTES
FC-1/CU-1	DUCTLESS SPLIT SYSTEM	9000	2800	10900	3000	R410A	230/1/60	MITSUBISHI	MSZ-FE09NA	MUZ-FE09NA	1,2,3,4,5,6,7
FC-2/CU-2	DUCTLESS SPLIT SYSTEM	12000	2800	13600	3000	R410A	230/1/60	MITSUBISHI	MSZ-FE12NA	MUZ-FE12NA	1,2,3,4,5,6,7

NOTES:
1. UNITS SHALL BE UL LISTED.
2. PRE-CHARGED REFRIGERANT PIPING.
3. DC INVERTER-DRIVEN TWIN ROTARY COMPRESSOR.
4. WIRED REMOTE CONTROLLER.
5. FOUR SPEED FAN CONTROL.
6. PROVIDE WALL MOUNTING BRACKET FOR INDOOR UNIT.
7. CONDENSATE DRAIN CONNECTION FOR DISCHARGE TO EXTERIOR OF BUILDING.

- DRAFT -
NOT FOR CONSTRUCTION

ETIC ENGINEERING

ARCADIS

NO.	DATE	DESCRIPTION	GM/SPEC	DWN	CHKD	SUPV	APVD BY
0	2/2/15	SUPPLEMENTAL PRE-FINAL (90%) DESIGN		AJW	JPB	JPB	JEF

REVISIONS

APPROVED BY: JEF

SO	
SUPV	JPB
DSGN	JPB
DWN	AJW
CHKD	JPB
OK	JEF
DATE	2/2/15
SCALES	AS SHOWN

TOPOCK GROUNDWATER REMEDIATION PROJECT

WORKSHOP BUILDING - HVAC PLAN

GAS TRANSMISSION & DISTRIBUTION
PACIFIC GAS AND ELECTRIC COMPANY
SAN FRANCISCO, CALIFORNIA

MICROFILM
BILL OF MATL
DWG LIST
SUPSDS
SUPSD BY
SHEET NO. of SHEETS
M-15-01
REV 1

N1808

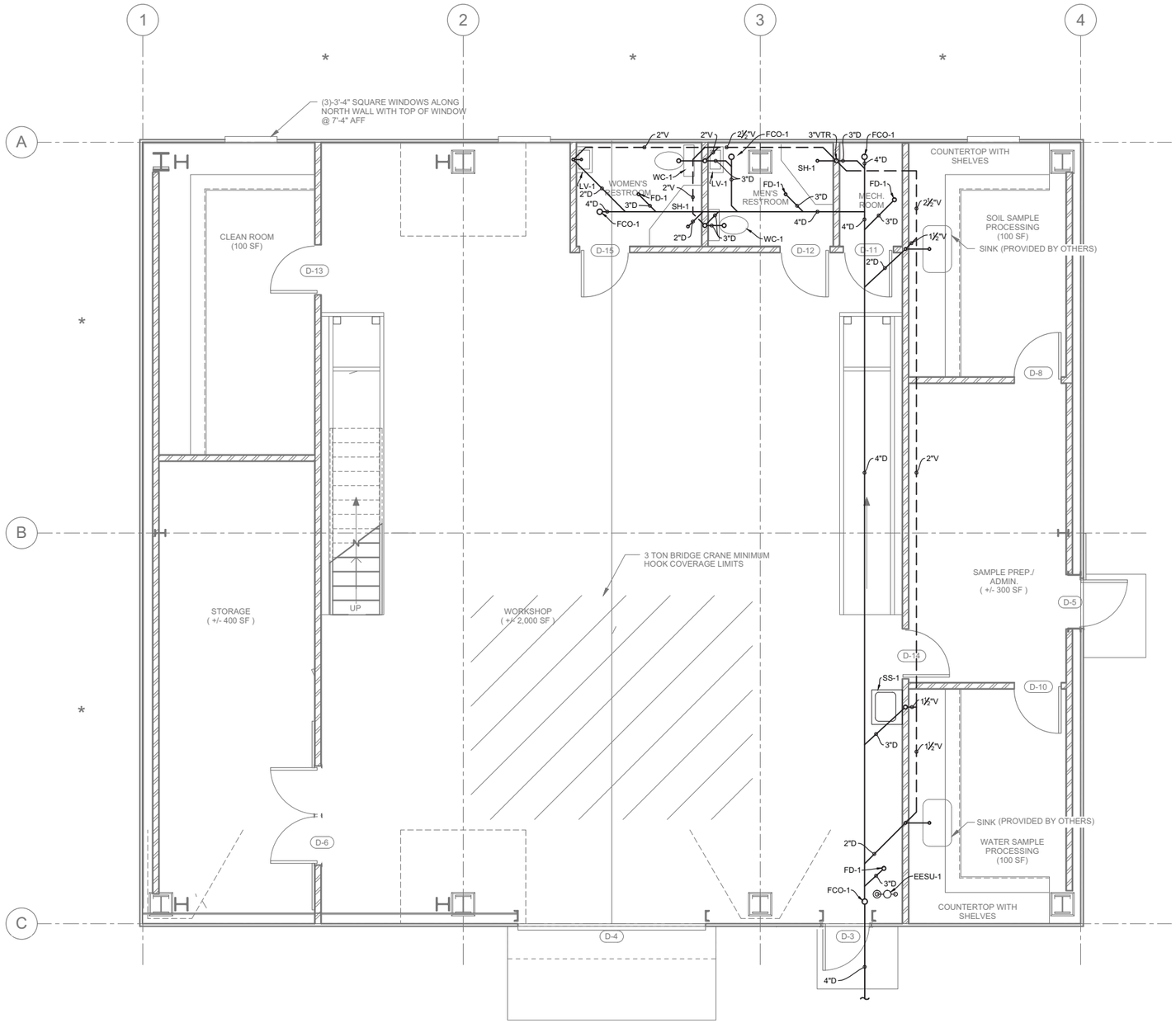

1 PLUMBING FLOOR PLAN - DWV

1/4"=1'-0"

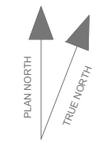

PLUMBING FIXTURE LOADING								
MARK	DESCRIPTION	QTY	WATER SUPPLY WFU	TOTAL WATER SUPPLY WFU	WATER SUPPLY GPM	TOTAL WATER SUPPLY GPM	DRAINAGE DFU	TOTAL DRAINAGE DFU
WC-1	WATER CLOSET (TANK TYPE)	2	4	8			5	10
LV-1	LAVATORY	2	1	2			1	2
SH-1	SHOWER	2	4	8			2	4
FD-1	FLOOR DRAIN	4					2	8
LAB SINK	LAB SINK	2	2	4			2	4
SS-1	SERVICE SINK	1	3	3			2	2
EESU-1	EMERGENCY EYEWASH AND SHOWER UNIT	1			20.4	20.4		
	TOTAL FIXTURE LOADING			25	18	20.4		30
	TOTAL DEMAND LOADING				38.4			

NOTES:
USE 1-1/2" BUILDING DOMESTIC WATER WITH TOTAL DEMAND OF 38.4 GPM.

DFU BASED ON UPC 2013 TABLE 7-5 MAXIM UNIT LOADING FOR HORIZONTAL PIPING AT 1/4" = 1'-0" SLOPE AND MAXIMUM UNITS FOR VENT PIPING.

PLUMBING FIXTURE SCHEDULE					
MARK	DESCRIPTION	CW SIZE	HW SIZE	MINIMUM TRAP/ TRAP ARM SIZE	VENT SIZE
WC-1	WATER CLOSET: ANSI/ASME112.19.2,FLOOR MOUNTED, SIPHON ACTION, VITREOUS CHINA, 18 INCHES HIGH CLOSE-COUPLED CLOSET COMBINATION WITH ELONGATED RIM, VITREOUS CHINA CLOSET TANK WITH FITTINGS AND LEVER FLUSHING VALVE, BOLT CAPS, AMERICAN STANDARD, CADET PRO MODEL 215AA.004. SOLID WHITE PLASTIC, OPEN FRONT, EXTENDED BACK, SELF-SUSTAINING HINGE, BRASS BOLTS, WITHOUT COVER, OLSONITE, MODEL NO. 95.	1/2"		3"	2"
LV-1	LAVATORY: ANSI/ASME A112.19.2, VITREOUS CHINA WALL-HUNG LAVATORY 20-1/2 BY 18-1/4 INCH MINIMUM, WITH 4 INCH HIGH BACK, DRILLINGS ON 4 INCH CENTERS, RECTANGULAR BASIN WITH SPLASH LIP, FRONT OVERFLOW, SELF-DRAINING DECK, AND CONCEALED ARM SUPPORTS, AMERICAN STANDARD MODEL LUCERNE 0335.012. ASME A112.18.1; 4 INCH CENTERS, 3-1/2 INCH SPOUT, SINGLE LEVER, CHROME-PLATED COMBINATION SUPPLY FITTING WITH POP-UP WASTE, WATER ECONOMY AERATOR, 1-1/4 INCH CHROME-PLATED 17 GAGE BRASS TAILPIECE AND P-TRAP WITH CLEAN-OUT PLUG AND ARM WITH ESCUTCHEON, CHROME-BRASS KEYED ANGLE STOPS, CHROME METAL EXPOSED SUPPLY PIPING, AND CHROME METAL SUPPLY AND WASTE ESCUTCHEON PLATES, AMERICAN STANDARD, MODEL CERAMIX 2000-101-002. PROVIDE POWERS PROCESS CONTROLS, MODEL HYDROGUARD SERIES 480, UNDERCOUNTER MIXING VALVE FOR POINT OF USE AT LAVATORIES. BODY CONSTRUCTED OF SOLD BRASS WITH CORROSION RESISTANT, STANILESS STEEL INTERNAL COMPONENTS. WAX ELEMENT SENSES AND COMPENSATES FOR TEMPERATURE AND PRESSURE FLUCTUATIONS IN THE SUPPLY LINE.	1/2"	1/2"	1-1/2"	1-1/2"
SH-1	SIZE 39 BY 39 BY 82 INCHES, CORNER UNIT, SANDWICH PANEL CONSTRUCTION, INNER AND OUTER SURFACES OF GALVANIZED-BONDERIZED STEEL, FINISHED IN WHITE SYNTHETIC BAKED-ON ENAMEL. SHOWER WALLS TO BE REINFORCED TO RECEIVE ALL ACCESSORIES. PANELS JOINED WITH ANODIZED ALUMINUM EXTRUDED MOLDING, CORE CONSTRUCTED OF WATER IMPERVIOUS ADHESIVE, TOP FRAME OF ONE-PIECE TUBULAR CONSTRUCTION WELDED TOGETHER. ALL FIELD-ASSEMBLED JOINTS OF DOUBLE BARRIER TYPE TO ENSURE LEAK-PROOF CONNECTIONS. BRASS CHROMIUM-PLATED BRACKETS, STAINLESS STEEL CURTAIN ROD, CURTAIN, AND BRASS SOAP DISH INCLUDED. ONE-PIECE SHOWER FLOOR, 6 INCH HIGH TERRAZZO OF WHITE CEMENT, BLACK AND WHITE MARBLE CHIPS. TILING FLANGE CAST INTEGRAL OF GALVANIZED-BONDERIZED STEEL AND EXTEND NOT LESS THAN 1-1/2 INCHES ABOVE SHOULDER. SHOULDER NOT LESS THAN 4 INCHES HIGH INSIDE AND NOT LESS THAN 3 INCHES WIDE. STAINLESS STEEL CAST INTEGRAL DRAIN BODY; PROVIDE FOR A CALKED LEAD CONNECTION NOT LESS THAN 1 INCH DEEP TO A 2 INCH PIPE. TRIM AND ACCESSORIES: ANSI/ASME A-117.1; MODEL 190AA PRESSURE BALANCED MIXING VALVE WITH STOPS. WALL CONNECTION WITH FLANGE AND TWO WALL HOOKS. ONE WRAP AROUND GRAB BAR AND ONE STRAIGHT GRAB BAR FOR VERTICAL INSTALLATION; EACH GRAB BAR BEING 1-1/2 INCH OR 1-1/4	1/2"	1/2"	2"	1-1/2"
FD-1	J.R. SMITH MFG. CO., MODEL 2696 PER DIVISION 22 SPECIFICATIONS.			2" & 3"	1-1/2"
FCO-1	J.R. SMITH MFG. CO., MODEL 4103S PER DIVISION 22 SPECIFICATIONS.			3" & 4"	
SS-1	SERVICE SINK: ANSI/ASME A112.19.1; 19-7/8 BY 16-3/8 BY 10-1/2 INCH DEEP, PORCELAIN ENAMELED (INSIDE ONLY) CAST IRON ROLL-RIM SINK, WITH 10-1/2 INCH HIGH BACK, CONCEALED HANGER, CHROME-PLATED STRAINER, CAST IRON P-TRAP WITH ADJUSTABLE FLOOR FLANGE, RIM GUARD, AMERICAN STANDARD, MODEL AKRON 7695.008. ASME A112.18.1; EXPOSED WALL TYPE SUPPLY WITH BRASS LEVER HANDLES, VACUUM BREAKER, HOSE END SPOUT, STRAINERS, ECCENTRIC ADJUSTABLE INLETS, STOPS IN SHANKS, AND ADJUSTABLE THREADED WALL FLANGES, ROUGH CHROME FINISH, AMERICAN STANDARD, MODEL 8341.076.	1/2"	1/2"	3"	1-1/2"
EESU-1	HAWS DRINKING FAUCET COMPANY, MODEL 8336 PER DIVISION 22 SPECIFICATIONS.	3/4"	3/4"		

WATER HEATER SCHEDULE									
MARK	TYPE	MANUFACTURER	MODEL	CAPACITY GALLONS	RECOVERY GPH	TEMPERATURE RISE °F	ELEMENTS KW	POWER V/PH/HZ	NOTES
WH-1	ELECTRIC STORAGE	LOCHINVAR	ETP066KD	66	38	100	2 - 4.5 KW EACH	240/1/60	1,2,3,4

NOTES:
1. FACTORY INSTALLED ASME TEMPERATURE AND PRESSURE RELIEF VALVE.
2. ELEMENTS SHALL BE WIRED FOR SIMULTANEOUS OPERATION.
3. UL LISTED GLASS LINED TANK WITH FOAM INSULATION, DRAIN VALVE, AND ANODE ROD.
4. AUTOMATIC OVERHEAT PROTECTION SAFETY CONTROL AND ADJUSTABLE THERMOSTATIC CONTROL.

- DRAFT -
NOT FOR CONSTRUCTION

ETIC ENGINEERING

ARCADIS

NO.	DATE	DESCRIPTION	GM/SPEC	DWN	CHKD	SUPV	APVD BY
0	2/2/15	SUPPLEMENTAL PRE-FINAL (90%) DESIGN		AJW	JPB	JPB	JEF

REVISIONS

APPROVED BY: JEF

SO	
SUPV	JPB
DSGN	JPB
DWN	AJW
CHKD	JPB
OK	JEF
DATE	2/2/15
SCALES	AS SHOWN

TOPOCK GROUNDWATER REMEDIATION PROJECT

PLUMBING FLOOR PLAN - DWV

GAS TRANSMISSION & DISTRIBUTION
PACIFIC GAS AND ELECTRIC COMPANY
SAN FRANCISCO, CALIFORNIA

MICROFILM
BILL OF MATL
DWG LIST
SUPSDS
SUPSD BY
SHEET NO. of SHEETS
P-15-01
REV 1

N1808

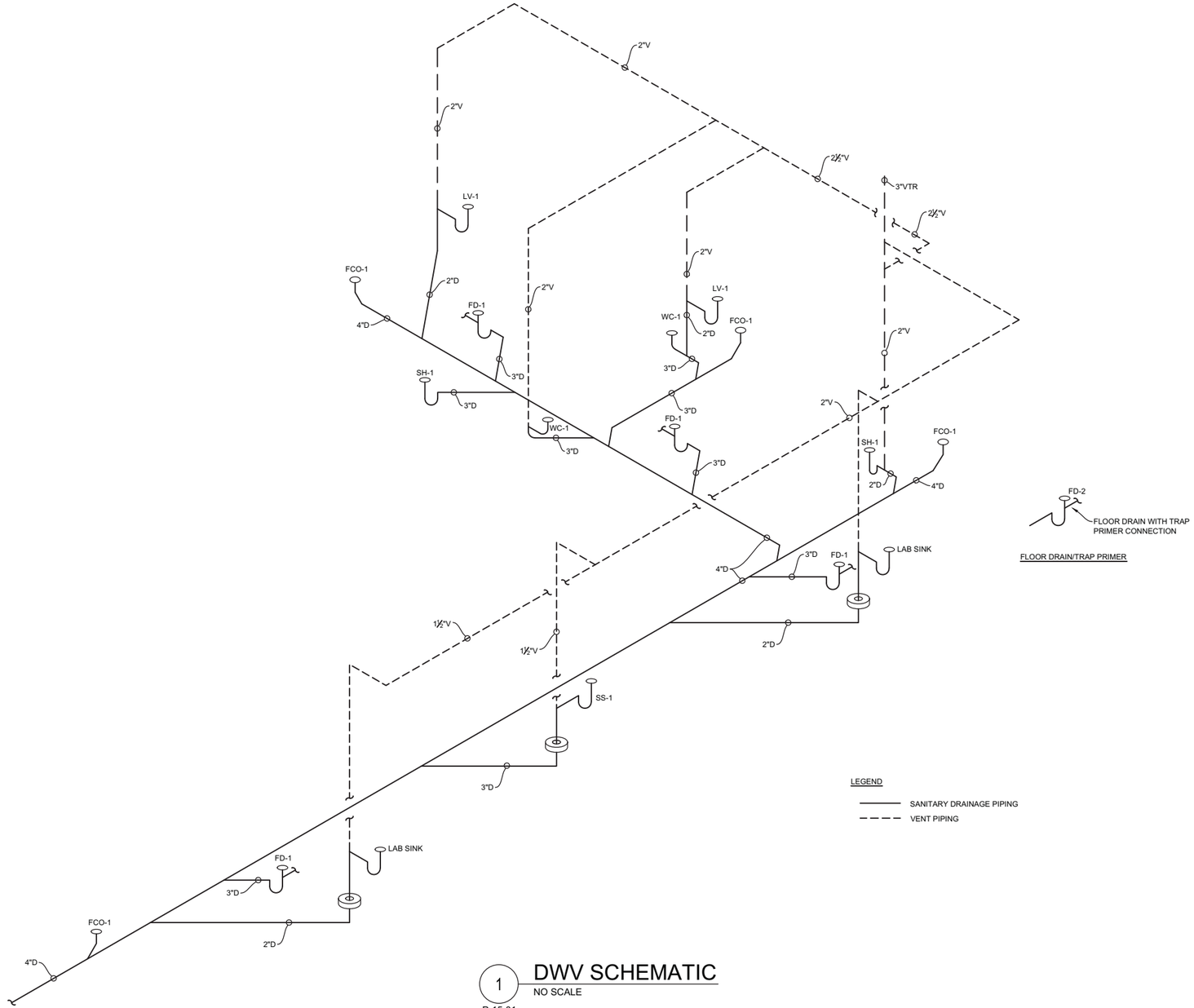

1 DWV SCHEMATIC
NO SCALE
P-15-01

- DRAFT -
NOT FOR CONSTRUCTION

ETIC ENGINEERING

ARCADIS

NO.	DATE	DESCRIPTION	GM/SPEC	DWN	CHKD	SUPV	APVD	BY
0	2/2/15	SUPPLEMENTAL PRE-FINAL (90%) DESIGN		AJW	JPB	JPB	JEF	

REVISIONS

APPROVED BY: JEF

SO
SUPV JPB
DSGN JPB
DWN AJW
CHKD JPB
OK JEF
DATE 2/2/15
SCALES AS SHOWN

TOPOCK GROUNDWATER REMEDIATION PROJECT

PLUMBING SCHEMATIC - DWV

GAS TRANSMISSION & DISTRIBUTION
PACIFIC GAS AND ELECTRIC COMPANY
SAN FRANCISCO, CALIFORNIA

MICROFILM
BILL OF MATL
DWG LIST
SUPSDS
SUPSD BY
SHEET NO. of SHEETS
P-15-02
REV 1

N180B

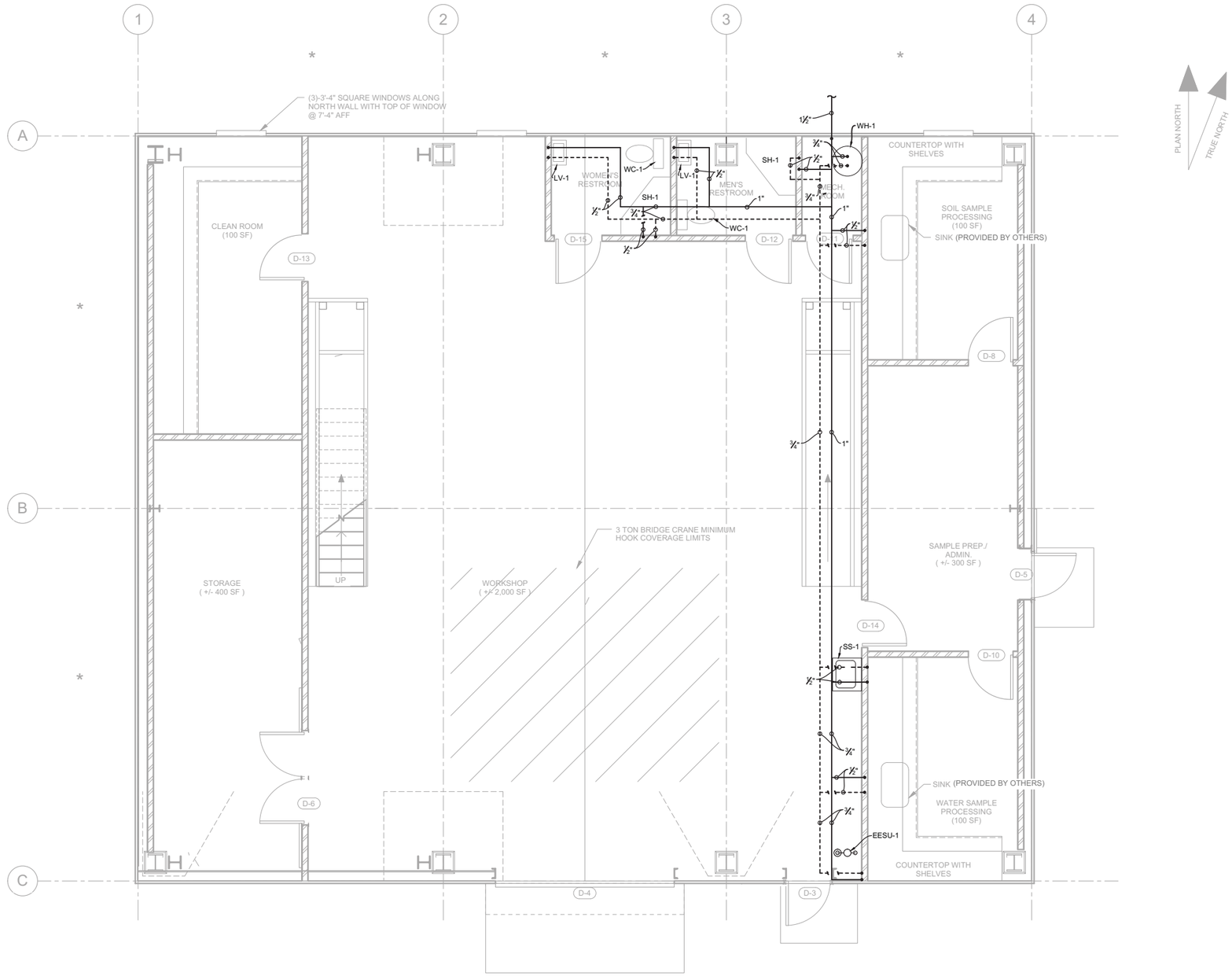

1 PLUMBING FLOOR PLAN - DOMESTIC HOT AND COLD WATER

1/4"=1'-0"

- DRAFT -
NOT FOR
CONSTRUCTION

ETIC ENGINEERING

ARCADIS

NO.	DATE	DESCRIPTION	GM/SPEC	DWN	CHKD	SUPV	APVD	BY
0	2/2/15	SUPPLEMENTAL PRE-FINAL (90%) DESIGN		AJW	JPB	JPB	JEF	

REVISIONS

APPROVED BY		
JEF	SO	
	SUPV	JPB
	DSGN	JPB
	DWN	AJW
	CHKD	JPB
	OK	JEF
	DATE	2/2/15
	SCALES	AS SHOWN

TOPOCK GROUNDWATER REMEDIATION PROJECT

PLUMBING FLOOR PLAN-
DOMESTIC HOT AND COLD WATER

GAS TRANSMISSION & DISTRIBUTION
PACIFIC GAS AND ELECTRIC COMPANY
SAN FRANCISCO, CALIFORNIA

MICROFILM	
BILL OF MATL	
DWG LIST	
SUPSDS	
SUPSD BY	
SHEET NO. of	SHEETS
P-15-03	REV 1

N1808

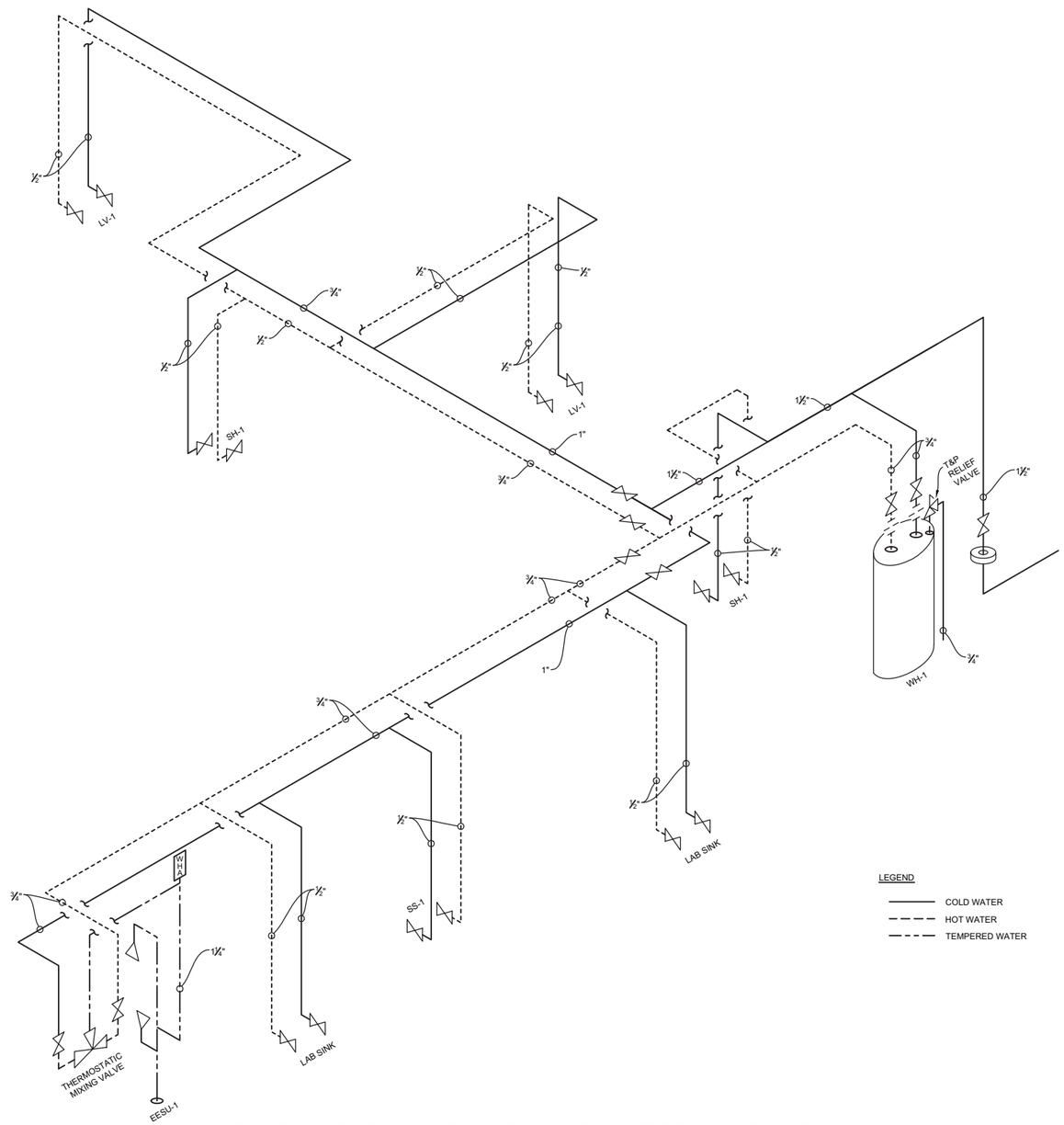

1 DOMESTIC HOT AND COLD WATER SCHEMATIC

NO SCALE

P-15-01

- DRAFT -
NOT FOR
CONSTRUCTION

ETIC ENGINEERING

ARCADIS

NO.	DATE	DESCRIPTION	GM/SPEC	DWN	CHKD	SUPV	APVD BY
0	2/2/15	SUPPLEMENTAL PRE-FINAL (90%) DESIGN		AJW	JPB	JPB	JEF

REVISIONS

APPROVED BY: JEF

SO
SUPV JPB
DSGN JPB
DWN AJW
CHKD JPB
OK JEF
DATE 2/2/15
SCALES AS SHOWN

TOPOCK GROUNDWATER REMEDIATION PROJECT

PLUMBING SCHEMATIC-
DOMESTIC HOT AND COLD WATER

GAS TRANSMISSION & DISTRIBUTION
PACIFIC GAS AND ELECTRIC COMPANY
SAN FRANCISCO, CALIFORNIA

MICROFILM
BILL OF MATL
DWG LIST
SUPSDS
SUPSD BY
SHEET NO. of SHEETS
P-15-04
REV 1

N1808

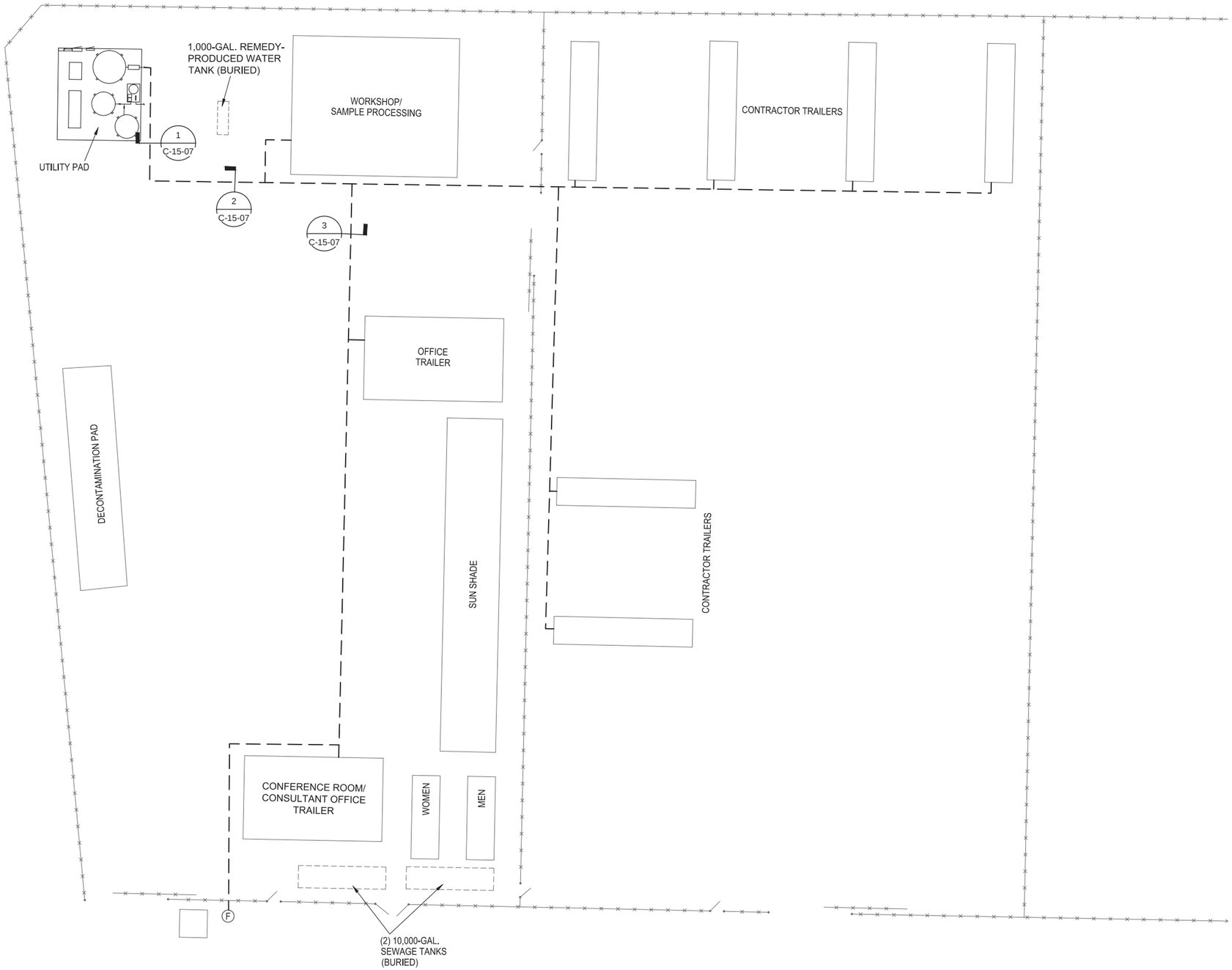

LEGEND:

— — — — 6" FIRE SUPPRESSION WATER LINE

(F) FIRE HYDRANT

FIRE PROTECTION REQUIREMENTS:

FIRE PROTECTION LINE FLOW AND PRESSURE REQUIREMENTS ARE AS FOLLOWS:
750 GPM FOR 60 MINUTES (45,000 GALLONS AVAILABLE) AT A LINE PRESSURE OF 50 PSI

N

0 20' 40' 60'

SCALE: 1"=20'

- DRAFT - NOT FOR CONSTRUCTION

ETIC ENGINEERING

ARCADIS

NO.	DATE	DESCRIPTION	GM/SPEC	DWN	CHKD	SUPV	APVD BY
0	2/2/15	SUPPLEMENTAL PRE-FINAL (90%) DESIGN		AJW	JMS	JPB	JEF

REVISIONS

APPROVED BY: JEF

SO	
SUPV	JPB
DSGN	JMS
DWN	AJW
CHKD	JPB
OK	JEF
DATE	2/2/15
SCALES	1" = 20'

TOPOCK GROUNDWATER REMEDIATION PROJECT

CONSTRUCTION HEADQUARTERS FIRE SUPPRESSION YARD PLAN

GAS TRANSMISSION & DISTRIBUTION

PACIFIC GAS AND ELECTRIC COMPANY
SAN FRANCISCO, CALIFORNIA

MICROFILM

BILL OF MATL

DWG LIST

SUPSDS

SUPSD BY

SHEET NO. of SHEETS

F-15-01

REV 1

N1808

BRANCH LINE RESTRAINT NOTES
(FOR PIPE HUNG w/ROD LONGER THAN 6")

1. BRANCH LINE RESTRAINT SHALL BE PROVIDED BY THE USE OF ONE OF THE FOLLOWING (PER NFPA 13, 2013 ed., SECTION 9.3.6):

   1.1. Listed sway brace assembly (see seismic bracing details).
   1.2. Wraparound U-hook satisfying the requirements of 9.3.5.5.11
   1.3. No. 12, 440 lb wire installed at least 45° from the vertical plane and anchored on both sides of the pipe. (wire restraint shall be located within 24" of a hanger which is of a type that will prevent upward movement per 9.3.6.2.
   1.4. CPVC hangers utilizing two points of attachment.
   1.5. Hanger not less than 45° from vertical installed within 6" of the vertical hanger arranged for restraint against upward movement, provided it is utilized such that l/r does not exceed 400, where the rod shall extend to the pipe or have a surge clip installed. MAX LENGTH OF ⅜" ROD @ l/r of 400 = 30"

2. THE END SPRINKLER ON A LINE SHALL BE RESTRAINED. PER 9.3.6.3.

3. BRANCH LINES SHALL BE LATERALLY RESTRAINED AT INTERVALS NOT EXCEEDING THOSE SPECIFIED IN TABLE 9.3.6.4(a) BASED ON BRANCH LINE DIAMETER AND THE VALUE OF Cp. (PER 9.3.5.9.3, Cp = .35)

4. WHERE BRANCH LINES ARE SUPPORTED BY RODS LESS THAN 6" LONG MEASURED BETWEEN THE TOP OF THE PIPE AND THE POINT OF ATTACHMENT TO THE BUILDING STRUCTURE, THE REQUIREMENTS OF 9.3.6.1 THROUGH 9.3.6.4 SHALL NOT APPLY AND ADDITIONAL RESTRAINT SHALL NOT BE REQUIRED. (PER 9.3.6.5.)

5. SPRIGS 4 FT OR LONGER SHALL BE RESTRAINED AGAINST LATERAL MOVEMENT. (9.3.6.6)

6. DROPS AND ARMOVERS SHALL NOT REQUIRE RESTRAINT. (9.3.6.7)

Cp value per NFPA 13 - 2013 table 9.3.5.9.3

Ss	Cp
0.23 =	0.35

SEISMIC COEFFICIENT
ASCE 7 Standard

Latitude = 34.84806 Longitude = -114.614131

Spectral Response Accelerations Ss and S1
Ss and S1 = Mapped Spectral Acceleration Values
Site Class B - Fa = 1.0 ,Fv = 1.0
Data are based on a 0.01 deg grid spacing

Period (sec)	Sa (g)
0.2	0.226 (Ss, Site Class B)
1.0	0.135 (S1, Site Class B)

MAX SPACING OF STEEL BRANCHLINE RESTRAINTS PER NFPA Table 9.3.6.4(a)

SEISMIC COEFFICIENT (Cp)			
PIPE (IN.)	Cp≤0.50	0.5<Cp≤0.71	Cp>0.71
1"	43	36	26
1¼"	46	39	27
1½"	49	41	29
2"	53	45	31

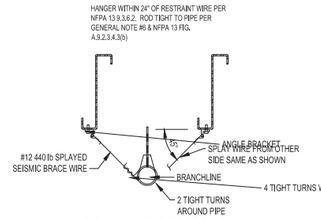

BRANCH LINE RESTRAINT
(FOR PIPE HUNG w/ROD LONGER THAN 6")

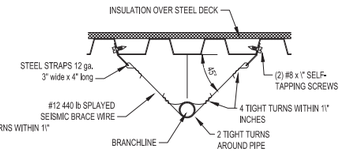

BRANCH LINE RESTRAINT
(FOR PIPE HUNG w/ROD LONGER THAN 6")

RESTRAINT TO BE INSTALLED WITHIN 24" OF HANGER PER NFPA 13, ROD TO BE RUN DOWN TIGHT TO PIPE PER NFPA 13.

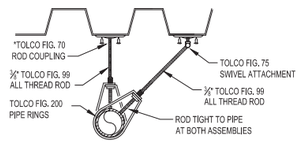

TYPICAL BRANCH LINE RESTRAINT
(FOR PIPE HUNG w/ROD LONGER THAN 6")

HANGER WITHIN 6" OF RESTRAINT WIRE PER NFPA 13 9.3.6.2. ROD TIGHT TO PIPE PER GENERAL NOTE #6 & NFPA 13 FIG. A.9.2.3.4.3(b)

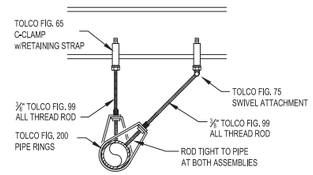

TYPICAL BRANCH LINE RESTRAINT
(FOR PIPE HUNG w/ROD LONGER THAN 6")

HANGER WITHIN 6" OF RESTRAINT WIRE PER NFPA 13 9.3.6.2. ROD TIGHT TO PIPE PER GENERAL NOTE #6 & NFPA 13 FIG. A.9.2.3.4.3(b)

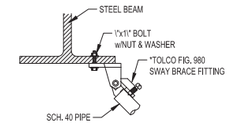

DETAIL S1
*PARALLEL OR PERPENDICULAR TO BEAM

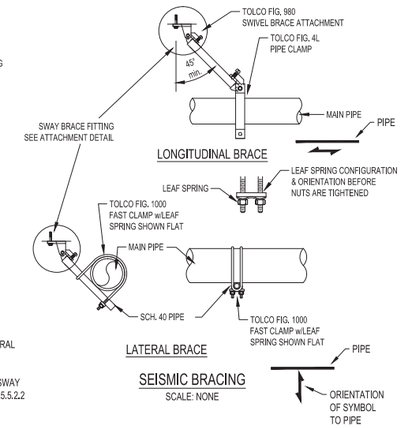

SEISMIC BRACING
SCALE: NONE

EARTHQUAKE BRACING NOTES

1. EARTHQUAKE BRACING SHALL BE PROVIDED PER NFPA 13, 2013 ed., SECTION 9.3.5.
2. LOADS ARE DETERMINED BY ANALYSIS PER 9.3.5.5.3 (SEE ANNEX E & CALCULATIONS).
3. LONGITUDINAL BRACES SHALL BE ALLOWED TO ACT AS LATERAL BRACES WHERE THEY ARE INSTALLED WITHIN 24" OF PIPING WHICH IS BRACED LATERALLY AND VICE VERSA PER 9.3.5.6.27 & 9.3.5.5.8.
4. EACH RUN OF PIPE BETWEEN A CHANGE IN DIRECTION SHALL BE PROVIDED WITH BOTH LATERAL AND LONGITUDINAL BRACING. EXCEPTION: PIPE RUNS LESS THAN 12 ft. PER 9.3.5.7.2.
5. WHERE THERE IS A CHANGE IN DIRECTION, THE CUMULATIVE DISTANCE BETWEEN LATERAL SWAY BRACES SHALL NOT EXCEED THE MAXIMUM PERMITTED DISTANCE IN ACCORDANCE WITH 9.3.5.5.2.2 (40 FT).

GENERAL NOTES

1. THE AUTOMATIC SPRINKLER SYSTEM SHALL CONFORM TO THE REQUIREMENTS OF THE 2013 EDITION OF NFPA 13.
2. PENETRATIONS OF RATED ASSEMBLIES SHALL BE FIRE STOPPED. (SEE DETAIL)
3. ALL ELECTRICAL WIRING TO BE PERFORMED BY OTHERS.
4. ARMOVERS LONGER THAN 24" SHALL BE PROVIDED WITH A HANGER.
5. THE NEW SYSTEM IS HYDRAULICALLY CALCULATED. (SEE PIPING PLAN)
6. NEW PIPING SHALL BE SUPPLIED FROM NEW UNDERGROUND.
7. UPON COMPLETION, THE OVERHEAD SYSTEM SHALL BE TESTED AT 200 PSI FOR TWO (2) HOURS. (BEFORE TIE-IN)
8. BUILDING CONSTRUCTION IS OF NON-COMBUSTIBLE CONSTRUCTION.
9. OWNER:
10. FOR INSPECTION CALL:
11. EXCLUSIONS WORK(BY OTHERS):
    1. Installation of Systems.
    2. Wiring of Fire Alarm Systems.
    3. All Underground Fire Line and Hydrant Design (By Civil)
    4. Structural Calculations.
    5. Plan Review, Permit and Water Dept. Flow Fees

U.L. SYSTEM NO. WJ1067
METAL PIPE THROUGH A SLEEVE IN CONCRETE FLOOR,WALL,OR BLOCK WALL
F RATING = 1 & 2-HR.
T RATING = 0-HR.
L RATING AT AMBIENT = 0 LESS THAN 1 CFM/SQ. FT.
L RATING AT 400° = 4 CFM/SQ. FT.

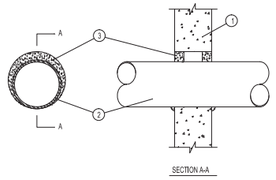

1. WALL ASSEMBLY :
   A. MINIMUM 5" THICK LIGHTWEIGHT OR NORMAL WEIGHT CONCRETE WALL.
   B. U.L. CLASSIFIED CONCRETE BLOCK WALL (MINIMUM 8" BLOCK).
2. PENETRATING ITEM TO BE ONE OF THE FOLLOWING :
   A. MAXIMUM 30" DIAMETER SCHEDULE 10 OR HEAVIER STEEL PIPE.
   B. MAXIMUM 6" NOMINAL DIAMETER COPPER PIPE.
   C. MAXIMUM 6" NOMINAL DIAMETER STEEL CONDUIT.
   D. MAXIMUM 4" NOMINAL DIAMETER EMT.
3. HILTI FS-ONE HIGH PERFORMANCE INTUMESCENT FIRESTOP SEALANT:
   MIN. 5/8" THICKNESS APPLIED WITHIN ANNULUS, FLUSH WITH BOTH SURFACES OF WALL.
   AT THE POINT OR CONTINUOUS CONTACT LOCATIONS BETWEEN PIPE AND WALL, A MIN 1/2" DIAM BEAD OF FILL MATERIAL SHALL BE APPLIED AT PIPE-WALL INTERFACE ON BOTH SURFACES

NOTES : 1. MAXIMUM DIAMETER OF OPENING = 32-1/4".
2. "ANNULAR SPACE = MINIMUM 0", MAXIMUM 1-7/8".
3. PIPE TO BE CENTERED WITHIN THE FIRESTOP SYSTEM.

SEE HILTI FIRESTOP INSTALLATION MANUAL FOR ADDITIONAL INSTRUCTIONS
HILTI, INC. TULSA, OK 1-800-879-8000

* PIPES 4" AND LARGER SHALL BE PROVIDED WITH A FLEXIBLE COUPLING WITHIN 12" OF EACH SIDE OF PENETRATION.(NFPA 13)

PENETRATION DETAIL

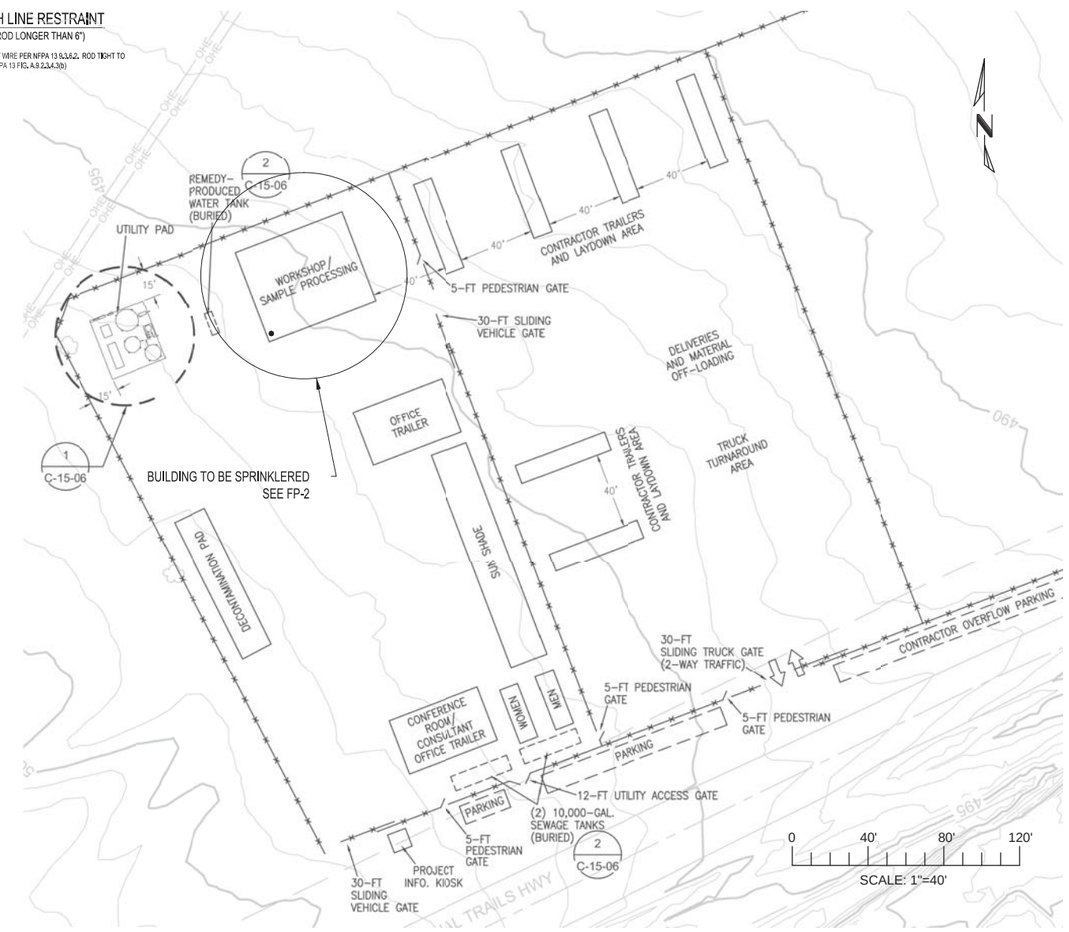

- DRAFT -
NOT FOR CONSTRUCTION

MARQUEE FIRE PROTECTION
710 W. Stadium Lane
Sacramento, CA. 95834-1130
TEL. 916. 641-7997 / 707. 642-7905
FAX. 916. 641-0775
CA. LIC. 570970 C-16

ARCADIS

NO.	DATE	DESCRIPTION	GM/SPEC	DWN	CHKD	SUPV	APVD	BY
0	2/2/15	SUPPLEMENTAL PRE-FINAL (90%) DESIGN		AJW	JMS	JPB	JEF	

REVISIONS

APPROVED BY: JEF

SO	
SUPV	JPB
DSGN	JMS
DWN	AJW
CHKD	JPB
OK	JEF
DATE	2/2/15
SCALES	1" = 20'

TOPOCK GROUNDWATER REMEDIATION PROJECT
WORKSHOP FIRE PROTECTION PLAN (1 OF 3)
GAS TRANSMISSION & DISTRIBUTION
PACIFIC GAS AND ELECTRIC COMPANY
SAN FRANCISCO, CALIFORNIA

MICROFILM
BILL OF MATL
DWG LIST
SUPSDS
SUPSD BY
SHEET NO. of SHEETS
F-15-02
REV 1

N180B

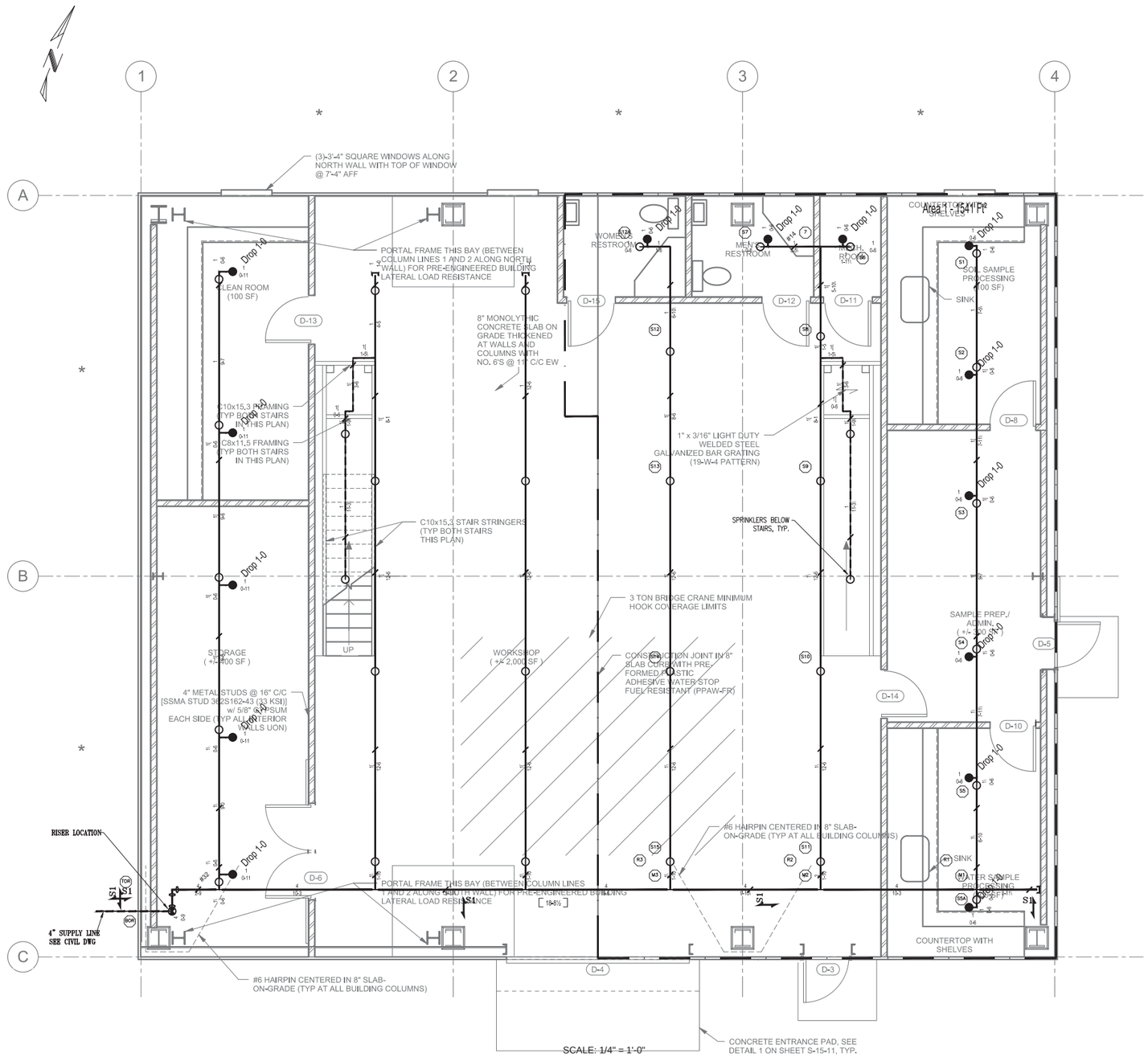

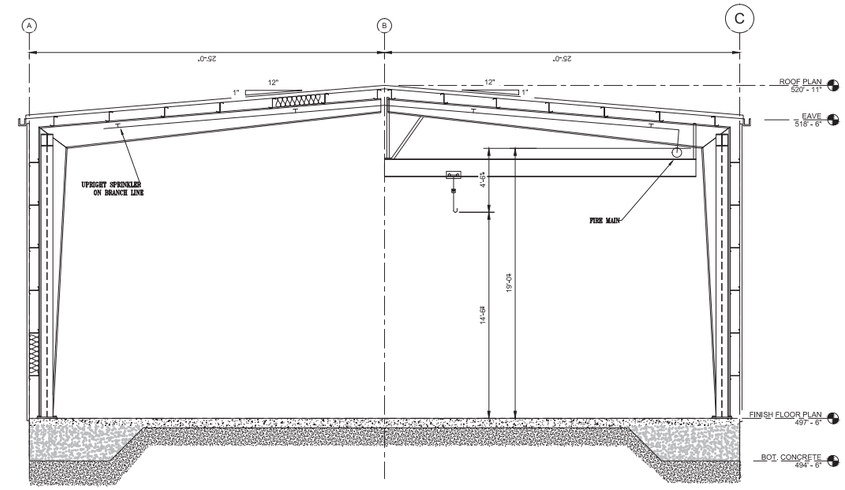

SCALE: 3/16" = 1'-0"

PIPING PLAN

1. AT OBSTRUCTED CONSTRUCTION SPRINKLER DEFLECTOR SHALL NOT EXCEED 6" BELOW THE BOTTOM OF THE FRAMING. (DEFLECTOR SHALL NOT EXCEED 22" BELOW THE DECK.)
2. MAIN PIPING SHALL HANG AT 18'-8\" AFF.
   LINE PIPING SHALL HANG AT 6" BOTTOM OF FRAMING.
3. MAIN HANGERS SHALL BE (#7) C-CLAMP W/ RETAINER STRAP.
   LINE HANGERS SHALL BE (#4) SIDE BEAM BRACKET. (SEE DETAILS)
4. MAIN PIPING SHALL BE SCHEDULE 10 STEEL (THINWALL) AND SHALL BE ROLL GROOVED PER NFPA 13.
   LINE PIPING SHALL BE SCHEDULE 40 STEEL (STANDARD) AND SHALL BE GROOVED OR THREADED PER NFPA 13.

- DRAFT -
NOT FOR CONSTRUCTION

MARQUEE FIRE PROTECTION
710 W. Stadium Lane
Sacramento, CA. 95834-1130
TEL. 916.641-7997 / 707.642-7905
FAX. 916.641-0775
CA. LIC. 570970 C-16

ARCADIS

NO.	DATE	DESCRIPTION	GM/SPEC	DWN	CHKD	SUPV	APVD BY
0	2/2/15	SUPPLEMENTAL PRE-FINAL (90%) DESIGN		AJW	JMS	JPB	JEF

REVISIONS

APPROVED BY	
JEF	SO
	SUPV JPB
	DSGN JMS
	DWN AJW
	CHKD JPB
	OK JEF
	DATE 2/2/15
	SCALES AS NOTED

TOPOCK GROUNDWATER REMEDIATION PROJECT

WORKSHOP FIRE PROTECTION PLAN (2 OF 3)

GAS TRANSMISSION & DISTRIBUTION
PACIFIC GAS AND ELECTRIC COMPANY
SAN FRANCISCO, CALIFORNIA

MICROFILM	
BILL OF MATL	
DWG LIST	
SUPSDS	
SUPSD BY	
SHEET NO. of SHEETS	
F-15-03	REV 1

N1808

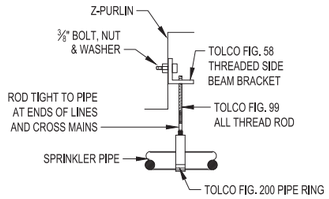

SIDE BEAM BRACKET
HANGER #4

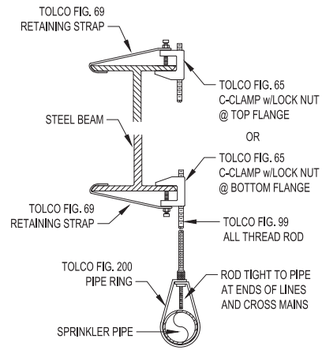

C-CLAMP
HANGER #7

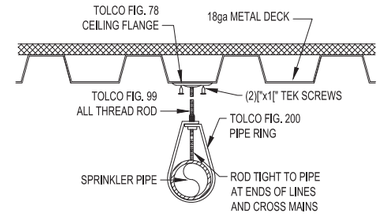

CEILING FLANGE
HANGER #14

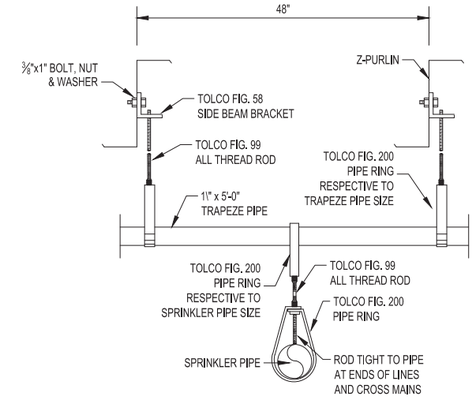

PIPE TRAPEZE
HANGER #32

HANGER NOTES

1. ALL HANGER ASSEMBLIES ARE PER NFPA 13 & MANUFACTURER DETAILS.

2. PER CBC AND NFPA 13 THE BUILDING STRUCTURE MUST BE CAPABLE OF SUPPORTING THE ADD LOAD OF THE WATER FILLED PIPE PLUS A MINIMUM OF 250 lbs.

3. HANGER SPACING SHALL BE PER NFPA 13 TABLE 9.2.2.1(a).

9.2.4 Location of Hangers on Mains

9.2.4.1 Unless the requirements of 9.2.4.2, 9.2.4.3, 9.2.4.4, 9.2.4.5 or 9.2.4.6 are met, hangers for mains shall be in accordance with 9.2.2, between each branch line or on each section of pipe, whichever is the lesser dimension.

9.2.4.2: For welded or mechanical outlets on a continuous section of pipe, hanger spacing shall be according to Table 9.2.2.1(a).

9.2.4.3: For cross mains in steel pipe systems in bays having two branch lines, the intermediate hanger shall be permitted to be omitted provided that a hanger attached to a purlin is installed on each branch line located as near to the cross main as the location of the purlin permits. Remaining branch line hangers shall be installed in accordance with 9.2.3.

9.2.4.7: A single section of pipe shall not require a hanger when the cumulative distance between hangers on the main does not exceed the spacing required by Table 9.2.2.1(a).

HANGER SPACING TABLE PER NFPA Table 9.2.2.1(a)

Nominal Pipe Size (in.)	1"	1["	1\"	2"	2\"	3"	4"	6"
Steel Pipe	12'-0"	12'-0"	15'-0"	15'-0"	15'-0"	15'-0"	15'-0"	15'-0"

CALCULATION DESIGN INFORMATION

SYSTEM or AREA No. . . . . ONE

QUICK RESPONSE SPRINKLERS? YES
SYSTEM TYPE. . . . . WET
K-FACTOR. 8.0
HAZARD. . . . . ORD. GP. 2
DENSITY (GPM/FT^2) 20
AREA PER SPRINKLER (FT^2) . 128

AREA OF OPERATION (FT^2) . 1500
AREA OF OPERATION ADJUSTED AS FOLLOWS:
DRY PIPE INCREASE (30%) . . N/A
SLOPE >2:12 INCREASE (30%). N/A
CEILING HEIGHT: . . N/A
% REDUCTION: . . . N/A
CEILING HEIGHT REDUCTION (FT^2) N/A
ADJ. AREA OF OPERATION (FT^2) 1500

WATER SUPPLY

STATIC (PSI). . . . . N/A
RESIDUAL (PSI) . . . . . N/A
FLOW (GPM) . . . . . N/A
PUMP (GPM @ PSI). N/A @ N/A

SYSTEM DEMAND

REQUIRED AT: BASE OF RISER

PSI REQUIRED 43.372
GPM REQUIRED. 499.353
PSI AVAILABLE. . . . . N/A
GPM AVAILABLE . . . . . N/A
SAFETY MARGIN . . . . . N/A
HOSE STREAM DEMAND (GPM):
INSIDE:. N/A – OUTSIDE:. 250

LOCATION: WORKSHOP

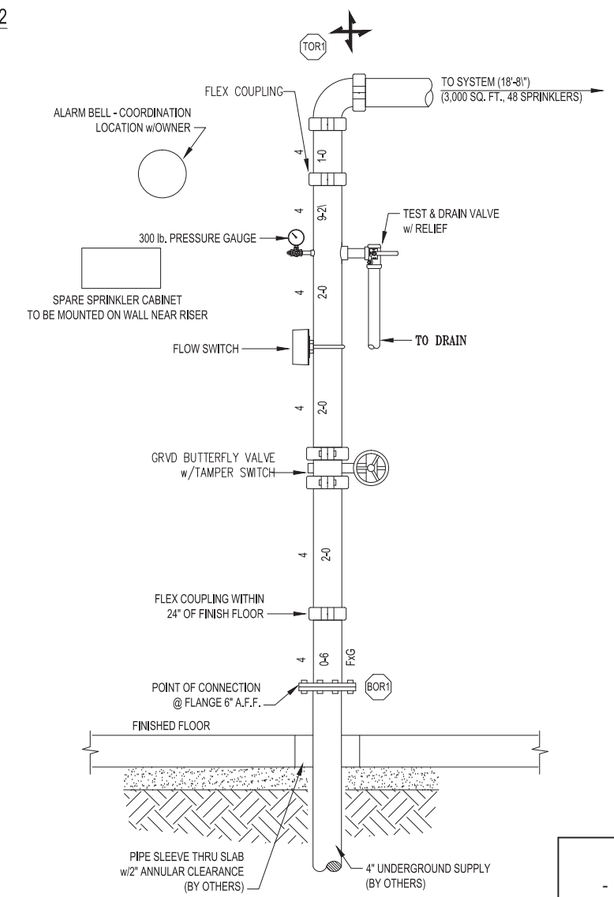

FIRE SPRINKLER RISER DETAIL
NTS

- DRAFT -
NOT FOR CONSTRUCTION

MARQUEE
FIRE PROTECTION
710 W. Stadium Lane
Sacramento, CA. 95834-1130
TEL. 916. 641-7997 / 707. 642-7905
FAX. 916. 641-0775
CA. LIC. 570970 C-16

ARCADIS

NO.	DATE	DESCRIPTION	GM/SPEC	DWN	CHKD	SUPV	APVD BY
0	2/2/15	SUPPLEMENTAL PRE-FINAL (90%) DESIGN		AJW	JMS	JPB	JEF

REVISIONS

APPROVED BY: JEF

SO	
SUPV	JPB
DSGN	JMS
DWN	AJW
CHKD	JPB
OK	JEF
DATE	2/2/15
SCALES	AS NOTED

TOPOCK GROUNDWATER REMEDIATION PROJECT

WORKSHOP FIRE PROTECTION PLAN (3 OF 3)

GAS TRANSMISSION & DISTRIBUTION
PACIFIC GAS AND ELECTRIC COMPANY
SAN FRANCISCO, CALIFORNIA

MICROFILM
BILL OF MATL
DWG LIST
SUPSDS
SUPSD BY
SHEET NO. of SHEETS
F-15-04
REV 1

N1808

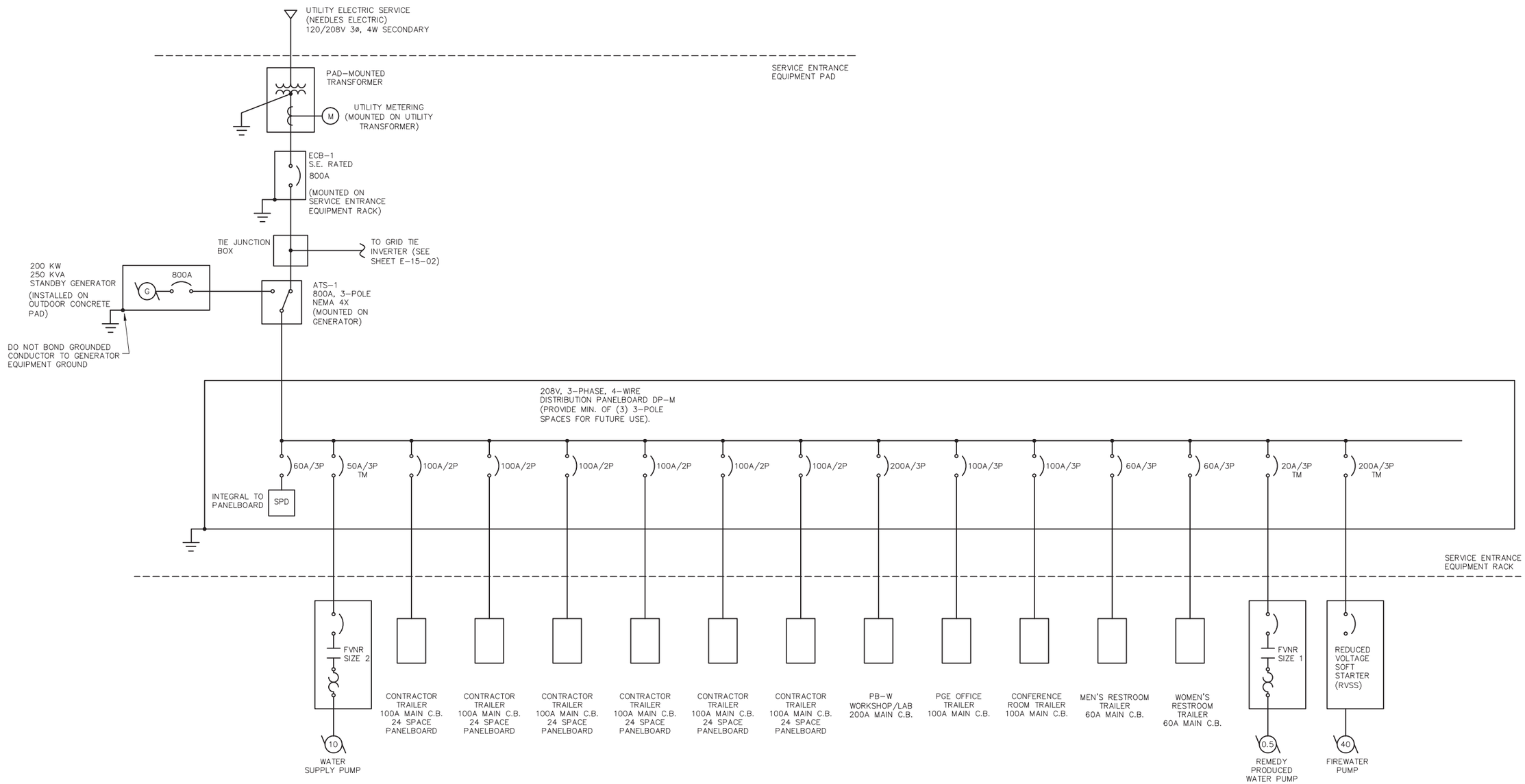

SINGLE LINE DIAGRAM

- DRAFT -
NOT FOR
CONSTRUCTION

ARCADIS

NO.	DATE	DESCRIPTION	GM/SPEC	DWN	CHKD	SUPV	APVD BY
0	2/2/15	SUPPLEMENTAL PRE-FINAL (90%) DESIGN		AJW	JMS	JPB	JEF

REVISIONS

APPROVED BY: JEF

SO	
SUPV	JPB
DSGN	JMS
DWN	AJW
CHKD	JPB
OK	JEF
DATE	2/2/15
SCALES	AS SHOWN

TOPOCK GROUNDWATER REMEDIATION PROJECT

CONSTRUCTION HEADQUARTERS
SINGLE LINE DIAGRAM

GAS TRANSMISSION & DISTRIBUTION
PACIFIC GAS AND ELECTRIC COMPANY
SAN FRANCISCO, CALIFORNIA

MICROFILM
BILL OF MATL
DWG LIST
SUPSDS
SUPSD BY
SHEET NO. of SHEETS
E-15-01
REV 1

N1808

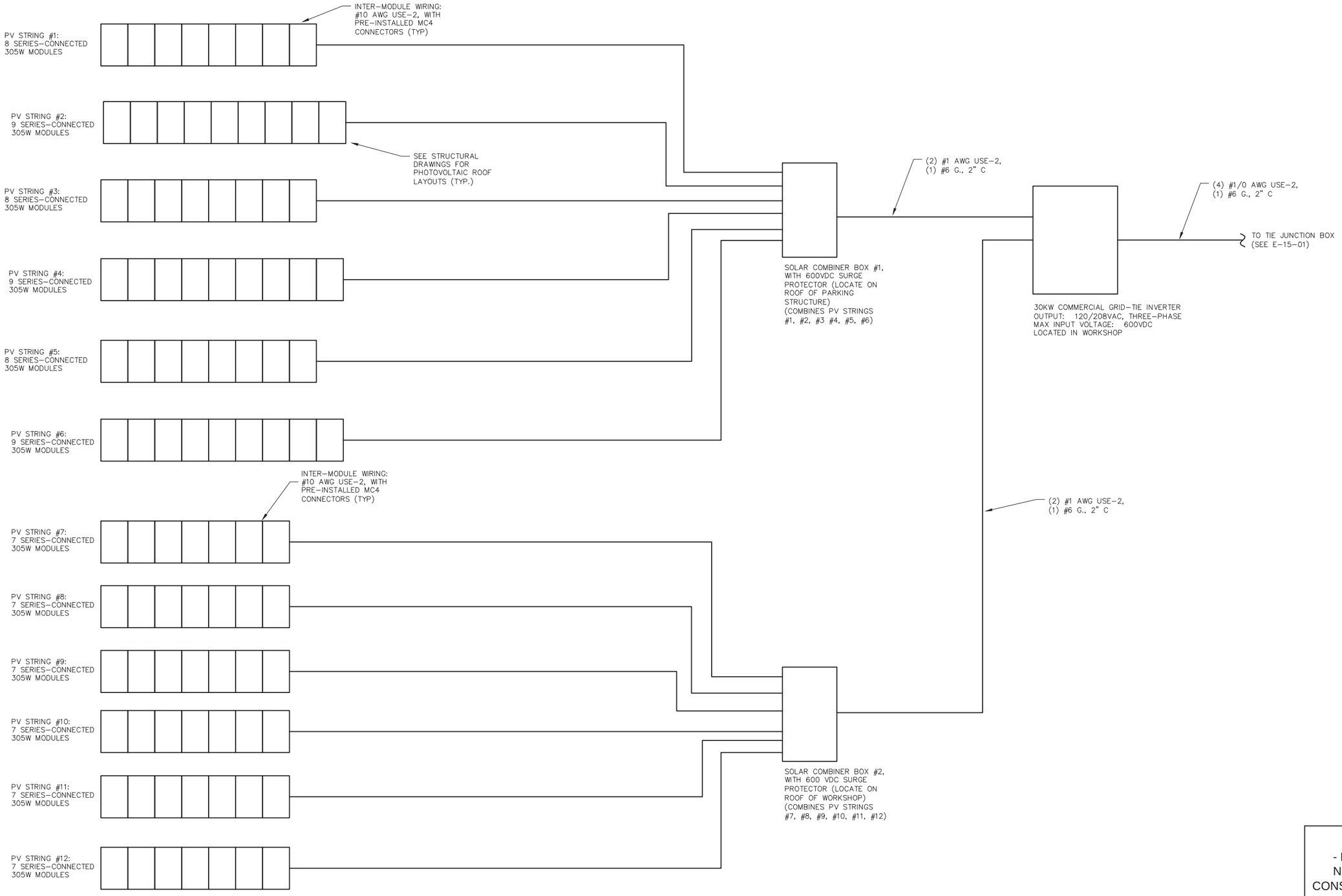

- DRAFT -
NOT FOR CONSTRUCTION

ARCADIS

NO.	DATE	DESCRIPTION	GM/SPEC	DWN	CHKD	SUPV	APVD BY
0	2/2/15	SUPPLEMENTAL PRE-FINAL (90%) DESIGN		AJW	JMS	JPB	JEF

REVISIONS

APPROVED BY: JEF

SO	
SUPV	JPB
DSGN	JMS
DWN	AJW
CHKD	JPB
OK	JEF
DATE	2/2/15
SCALES	AS SHOWN

TOPOCK GROUNDWATER REMEDIATION PROJECT

CONSTRUCTION HEADQUARTERS SOLAR SINGLE LINE DIAGRAM

GAS TRANSMISSION & DISTRIBUTION
PACIFIC GAS AND ELECTRIC COMPANY
SAN FRANCISCO, CALIFORNIA

MICROFILM
BILL OF MATL
DWG LIST
SUPSDS
SUPSD BY
SHEET NO. of SHEETS
E-15-02
REV 1

N1808

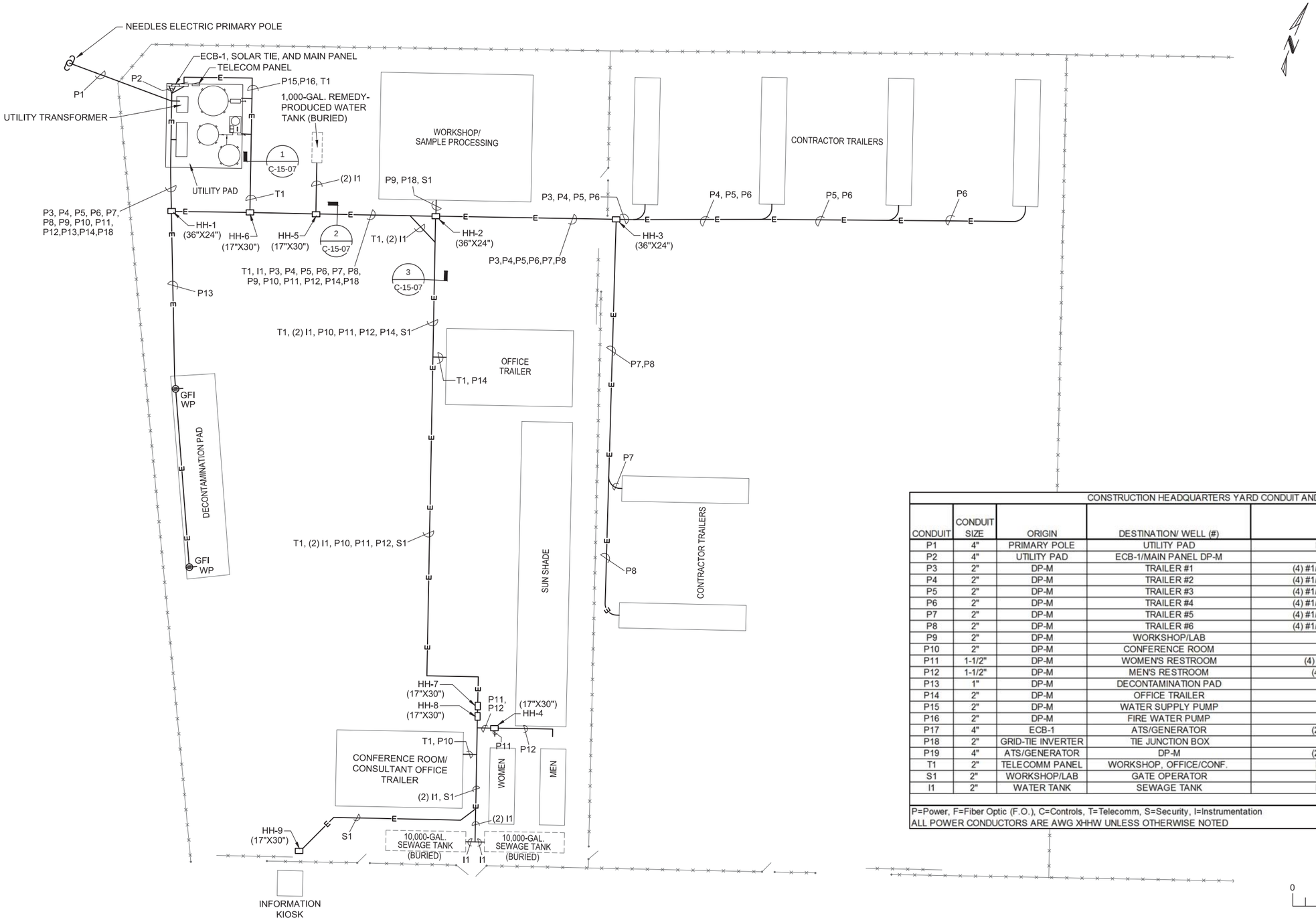

CONSTRUCTION HEADQUARTERS YARD CONDUIT AND CABLE SCHEDULE

CONDUIT	CONDUIT SIZE	ORIGIN	DESTINATION/ WELL (#)	CONDUCTOR	NOTES
P1	4"	PRIMARY POLE	UTILITY PAD	EMPTY 4" CONDUIT WITH PULL LINE	
P2	4"	UTILITY PAD	ECB-1/MAIN PANEL DP-M	(2) SETS OF (4) 600 KCM	
P3	2"	DP-M	TRAILER #1	(4) #1/0, (1) #6 GND (CONTRACTOR TRAILER #1)	
P4	2"	DP-M	TRAILER #2	(4) #1/0, (1) #6 GND (CONTRACTOR TRAILER #2)	
P5	2"	DP-M	TRAILER #3	(4) #1/0, (1) #6 GND (CONTRACTOR TRAILER #3)	
P6	2"	DP-M	TRAILER #4	(4) #1/0, (1) #6 GND (CONTRACTOR TRAILER #4)	
P7	2"	DP-M	TRAILER #5	(4) #1/0, (1) #6 GND (CONTRACTOR TRAILER #5)	
P8	2"	DP-M	TRAILER #6	(4) #1/0, (1) #6 GND (CONTRACTOR TRAILER #6)	
P9	2"	DP-M	WORKSHOP/LAB	(4) #3/0, (1) #6 GND	
P10	2"	DP-M	CONFERENCE ROOM	(4) #1/0, (1) #6 GND	
P11	1-1/2"	DP-M	WOMEN'S RESTROOM	(4) #1, (1) #8 GND (WOMEN'S RESTROOM)	
P12	1-1/2"	DP-M	MEN'S RESTROOM	(4) #1, (1) #8 GND (MEN'S RESTROOM)	
P13	1"	DP-M	DECONTAMINATION PAD	(2) #8, (1) #8 GND (DECON PAD)	(2) SETS
P14	2"	DP-M	OFFICE TRAILER	(4) #1 / 0, (1) #6 GND	
P15	2"	DP-M	WATER SUPPLY PUMP	(3) #4, (1) #6 GND	
P16	2"	DP-M	FIRE WATER PUMP	(3) #3/0, (1) #6 GND	
P17	4"	ECB-1	ATS/GENERATOR	(2) SETS OF (4) 600 KCM, (1) #1/0 GND	
P18	2"	GRID-TIE INVERTER	TIE JUNCTION BOX	(4) #1/0 USE, (1) #6 GND	
P19	4"	ATS/GENERATOR	DP-M	(2) SETS OF (4) 600 KCM, (1) #1/0 GND	
T1	2"	TELECOMM PANEL	WORKSHOP, OFFICE/CONF.	EMPTY 2" CONDUIT WITH PULL LINE	
S1	2"	WORKSHOP/LAB	GATE OPERATOR	EMPTY 2" CONDUIT WITH PULL LINE	
I1	2"	WATER TANK	SEWAGE TANK	EMPTY 2" CONDUIT WITH PULL LINE	

P=Power, F=Fiber Optic (F.O.), C=Controls, T=Telecomm, S=Security, I=Instrumentation
ALL POWER CONDUCTORS ARE AWG XHHW UNLESS OTHERWISE NOTED

- DRAFT -
NOT FOR CONSTRUCTION

ETIC ENGINEERING

ARCADIS

NO.	DATE	DESCRIPTION	GM/SPEC	DWN	CHKD	SUPV	APVD BY
0	2/2/15	SUPPLEMENTAL PRE-FINAL (90%) DESIGN		AJW	JMS	JPB	JEF

REVISIONS

APPROVED BY: JEF

SO	
SUPV	JPB
DSGN	JMS
DWN	AJW
CHKD	JPB
OK	JEF
DATE	2/2/15
SCALES	1" = 20'

TOPOCK GROUNDWATER REMEDIATION PROJECT

CONSTRUCTION HEADQUARTERS ELECTRICAL PLAN

GAS TRANSMISSION & DISTRIBUTION
PACIFIC GAS AND ELECTRIC COMPANY
SAN FRANCISCO, CALIFORNIA

MICROFILM
BILL OF MATL
DWG LIST
SUPSDS
SUPSD BY
SHEET NO. of SHEETS
E-15-03
REV 1

N180B

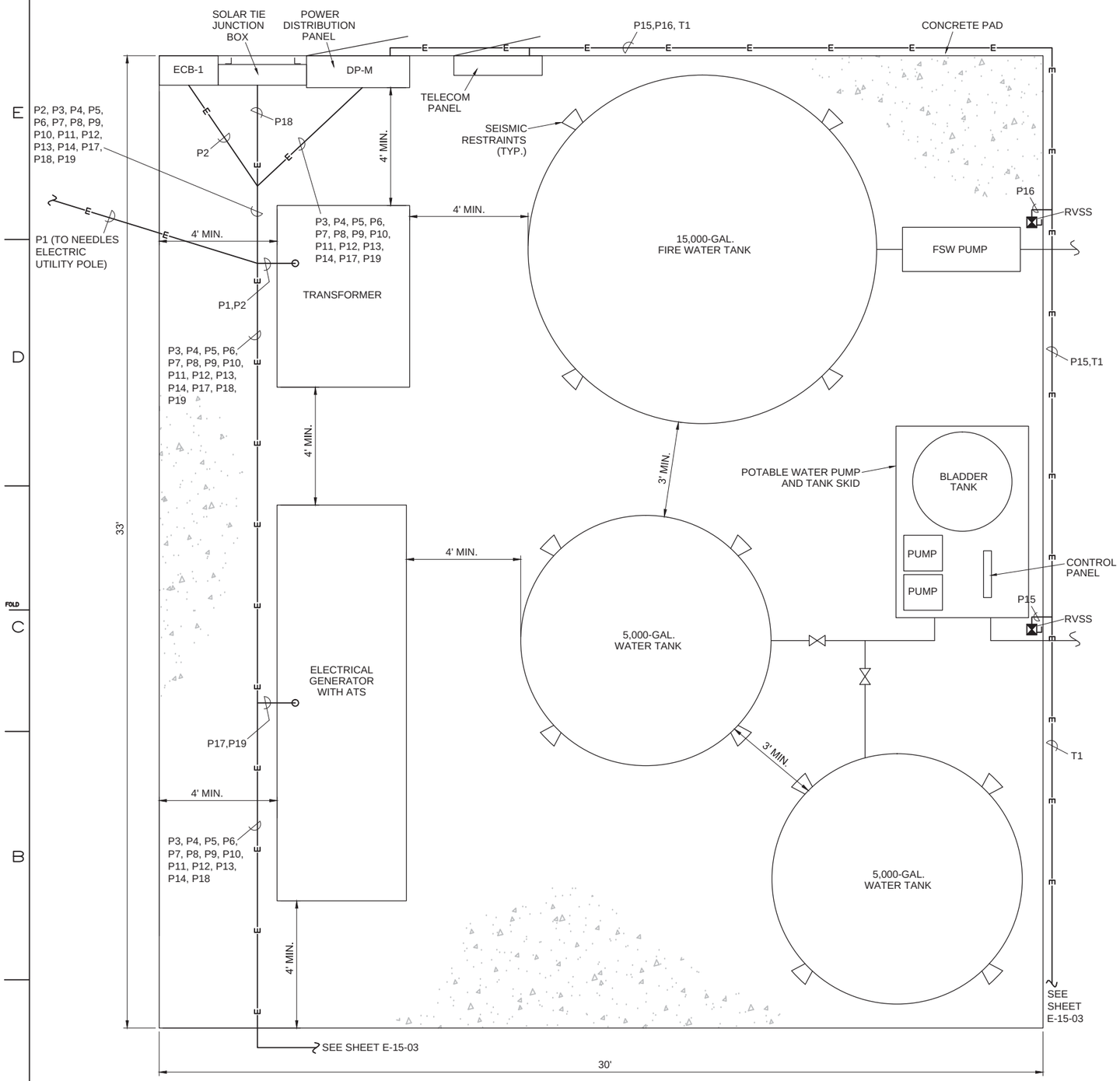

1 UTILITY PAD ELECTRICAL PLAN

1/2"=1'-0"

- DRAFT - NOT FOR CONSTRUCTION

ETIC ENGINEERING

ARCADIS

NO.	DATE	DESCRIPTION	GM/SPEC	DWN	CHKD	SUPV	APVD BY
0	2/2/15	SUPPLEMENTAL PRE-FINAL (90%) DESIGN		AJW	JMS	JPB	JEF

REVISIONS

APPROVED BY: JEF

SO	
SUPV	JPB
DSGN	JMS
DWN	AJW
CHKD	JPB
OK	JEF
DATE	2/2/15
SCALES	NONE

TOPOCK GROUNDWATER REMEDIATION PROJECT

UTILITY PAD ELECTRICAL PLAN

GAS TRANSMISSION & DISTRIBUTION

PACIFIC GAS AND ELECTRIC COMPANY

SAN FRANCISCO, CALIFORNIA

MICROFILM

BILL OF MATL

DWG LIST

SUPSDS

SUPSD BY

SHEET NO. of SHEETS: E-15-04

REV: 1

N1808

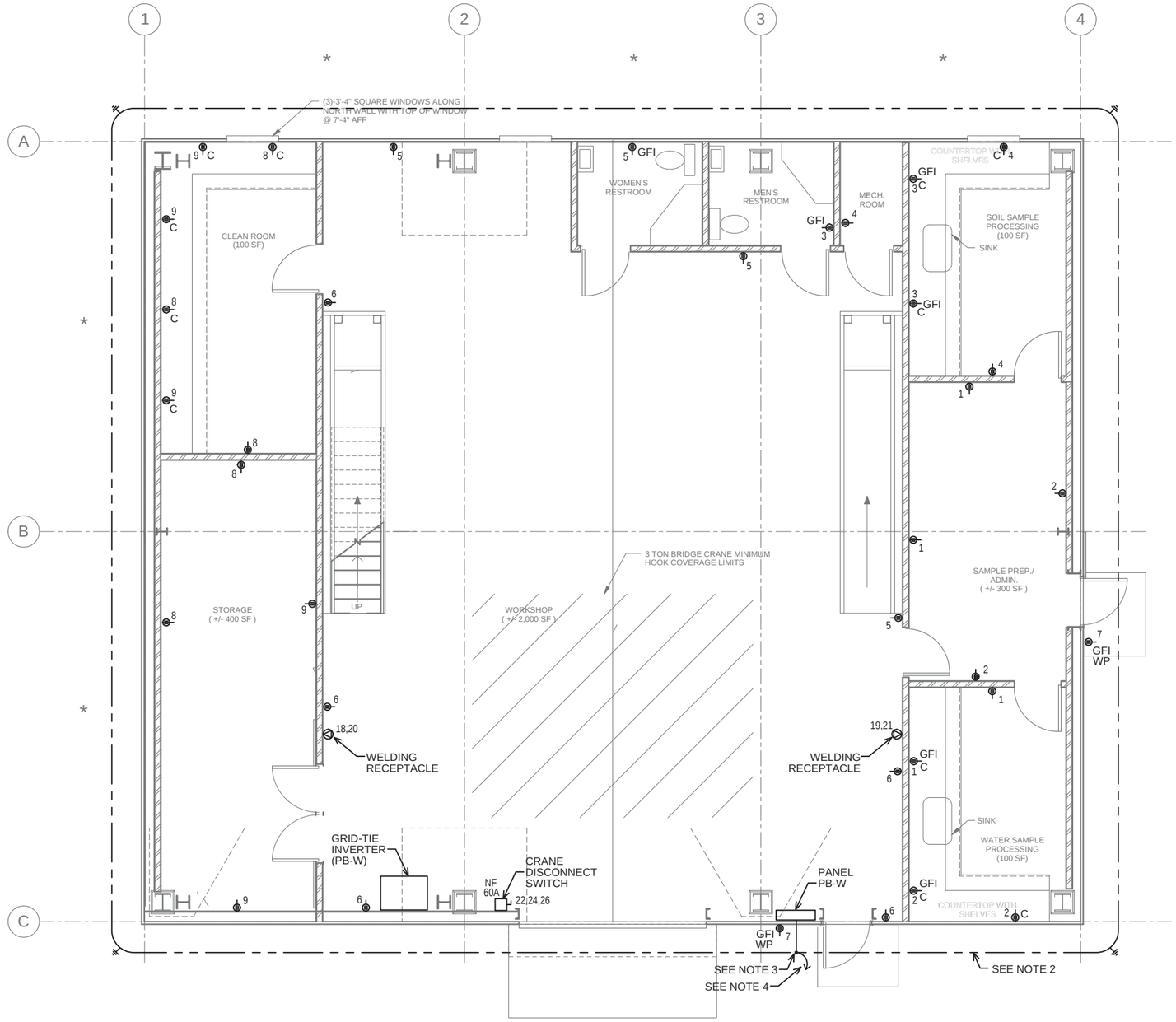

1 POWER PLAN
1/4"=1'-0"

NOTES:
1. REFER TO SINGLE LINE DIAGRAMS FOR CONDUIT AND WIRE SCHEDULE.
2. PROVIDE AND INSTALL #2 / 0 GROUNDING RING.
3. PROVIDE AND INSTALL #1 / 0 AWG GROUNDING ELECTRODE CONDUCTOR TO SERVICE ENTRANCE DISCONNECT IN PANEL PB-W. DO NOT PROVIDE N-G BOND.
4. PROVIDE AND INSTALL #2 GROUNDING ELECTRODE TO FOUNDATION REBAR.
5. USE #10 CONDUCTORS FOR 120V, 20a BRANCH CIRCUITS OVER 100 FEET.
6. 120V, 1Ø CIRCUITING WIRED TO PANEL PB-W, CIRCUIT NUMBER AS SHOWN ON PLANS, UNLESS OTHERWISE NOTED.

- DRAFT -
NOT FOR CONSTRUCTION

ETIC ENGINEERING

ARCADIS

NO.	DATE	DESCRIPTION	GM/SPEC	DWN	CHKD	SUPV	APVD BY
0	2/2/15	SUPPLEMENTAL PRE-FINAL (90%) DESIGN		AJW	JMS	JPB	JEF

REVISIONS

APPROVED BY: JEF

SO	
SUPV	JPB
DSGN	JMS
DWN	AJW
CHKD	JPB
OK	JEF
DATE	2/2/15
SCALES	AS SHOWN

TOPOCK GROUNDWATER REMEDIATION PROJECT

WORKSHOP BUILDING
ELECTRICAL PLAN

GAS TRANSMISSION & DISTRIBUTION
PACIFIC GAS AND ELECTRIC COMPANY
SAN FRANCISCO, CALIFORNIA

MICROFILM
BILL OF MATL
DWG LIST
SUPSDS
SUPSD BY
SHEET NO. of SHEETS
E-15-05
REV 1

N1808

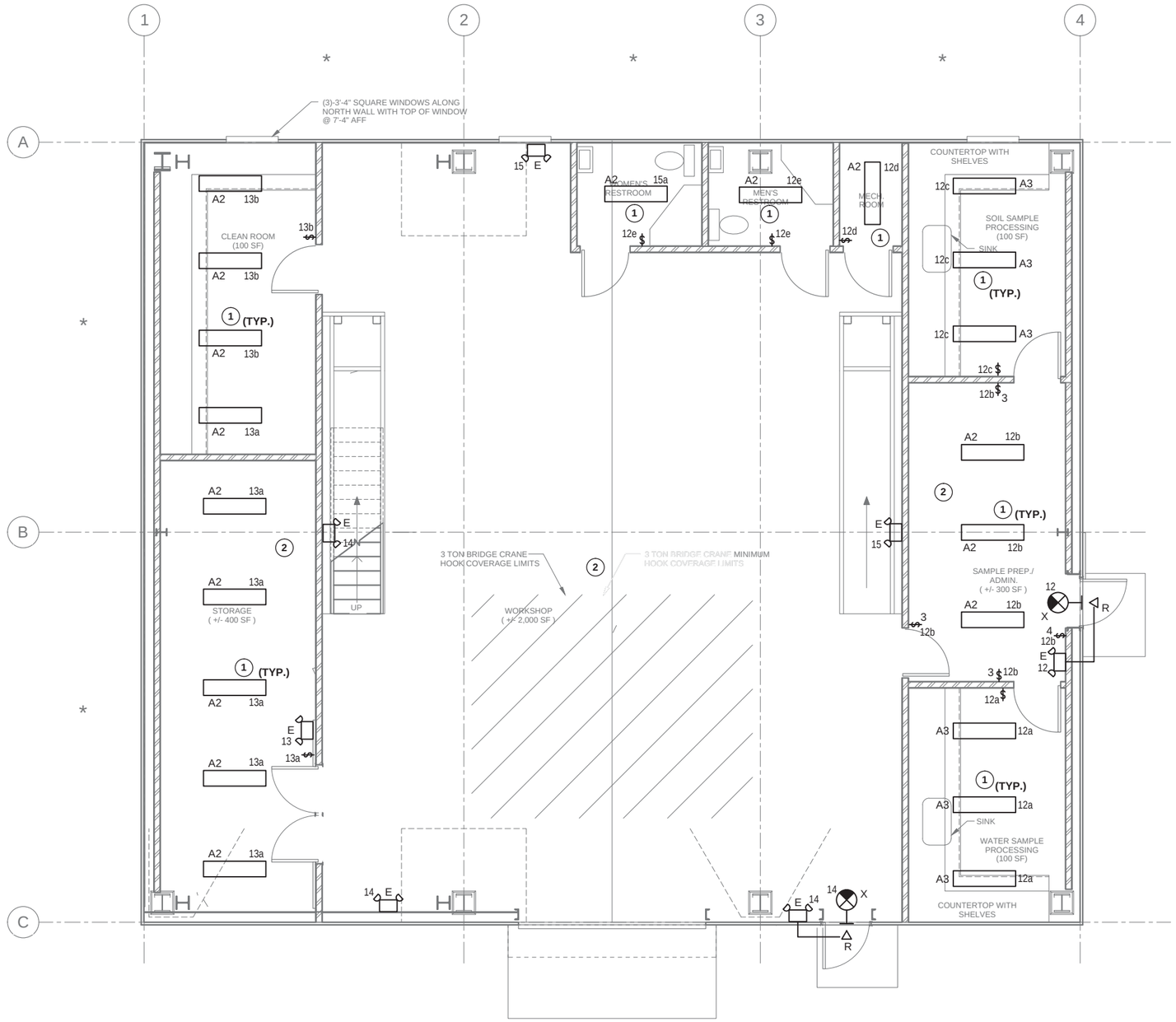

1 LIGHTING PLAN
1/4"=1'-0"

LEGEND:

$ 2a — NUMBER INDICATES CIRCUIT, LOWER CASE LETTER INDICATES SWITCH LEG

GENERAL NOTES:

1. MONORAIL LOCATION SHOULD BE AVOIDED FOR LIGHTING LAYOUT IN WORKSHOP.
2. 120V, 1Ø CIRCUITING TO BE (2) #12, (1) #12 G., 3/4" C., UNLESS OTHERWISE NOTED.
3. USE #10 CONDUCTORS FOR 120V, 20A BRANCH CIRCUITS OVER 100 FEET.
4. 120V, 1Ø LIGHTING CIRCUITING WIRED TO PANEL PB-W, CIRCUIT NUMBER AS SHOWN ON PLANS, UNLESS OTHERWISE NOTED.
5. CIRCUIT EXIT AND EMERGENCY LIGHTING AHEAD OF LOCAL SWITCHING.

PLAN NOTES:

1 MOUNT LUMINAIRE DIRECTLY TO CEILING SURFACE.

2 SEE SHEET E-15-07 FOR WORKSHOP AREA AND STORAGE AREA LIGHTING AND SWITCHING.

- DRAFT - NOT FOR CONSTRUCTION

ETIC ENGINEERING

ARCADIS

NO.	DATE	DESCRIPTION	GM/SPEC	DWN	CHKD	SUPV	APVD BY
0	2/2/15	SUPPLEMENTAL PRE-FINAL (90%) DESIGN		AJW	JMS	JPB	JEF

REVISIONS

APPROVED BY: JEF

SO	
SUPV	JPB
DSGN	JMS
DWN	AJW
CHKD	JPB
OK	JEF
DATE	2/2/15
SCALES	AS SHOWN

TOPOCK GROUNDWATER REMEDIATION PROJECT

WORKSHOP BUILDING LIGHTING PLAN (1 OF 2)

GAS TRANSMISSION & DISTRIBUTION
PACIFIC GAS AND ELECTRIC COMPANY
SAN FRANCISCO, CALIFORNIA

MICROFILM
BILL OF MATL
DWG LIST
SUPSDS
SUPSD BY
SHEET NO. of SHEETS: E-15-06
REV: 1

N1808

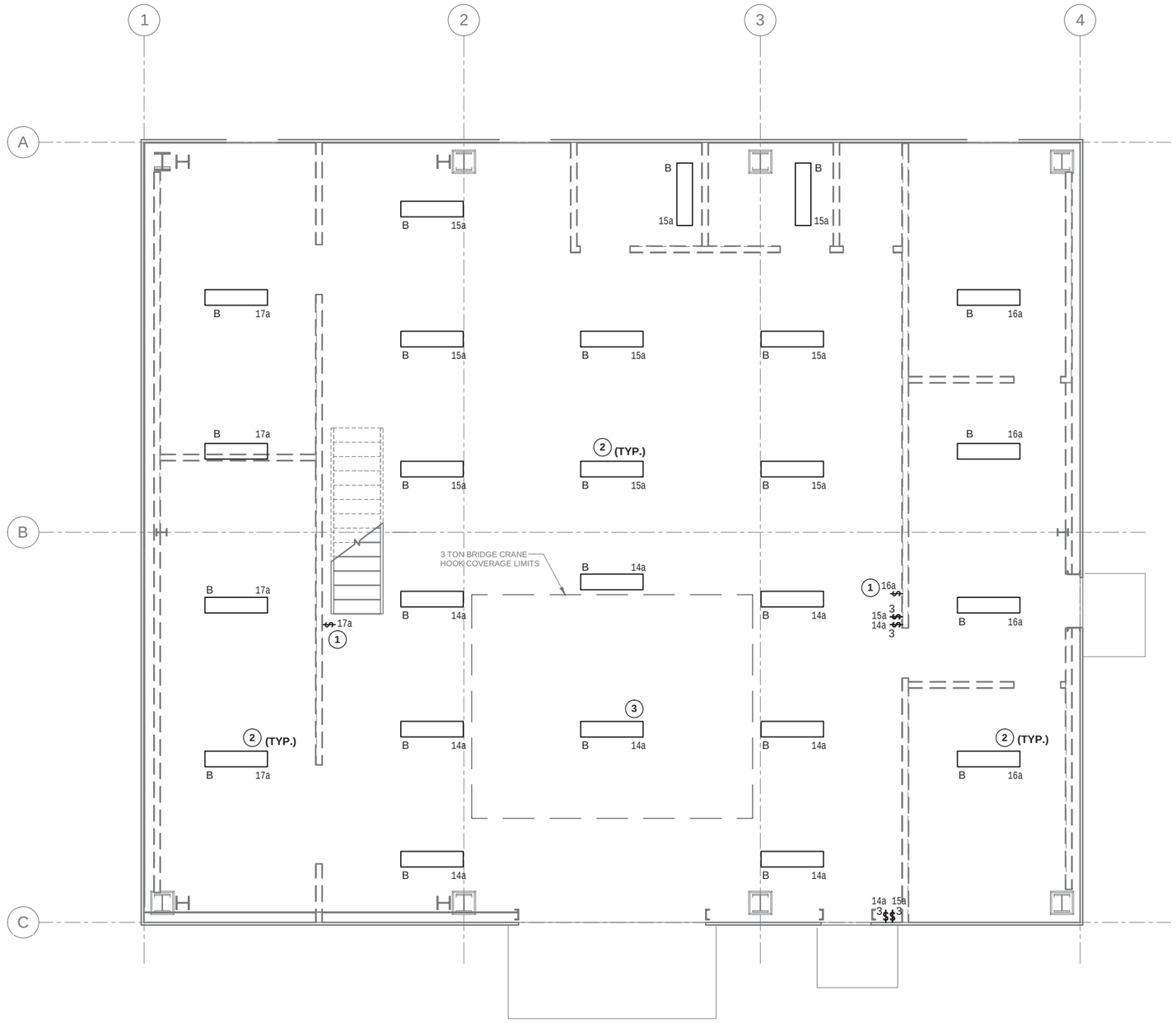

1 LIGHTING PLAN
1/4"=1'-0"

LEGEND:

$ 2a

NUMBER INDICATES CIRCUIT,
LOWER CASE LETTER INDICATES SWITCH LEG

GENERAL NOTES:

1. MONORAIL LOCATION SHOULD BE AVOIDED FOR LIGHTING LAYOUT IN WORKSHOP.
2. 120V, 1Ø CIRCUITING TO BE (2) #12, (1) #12 G., 3/4" C., UNLESS OTHERWISE NOTED.
3. USE #10 CONDUCTORS FOR 120V, 20A BRANCH CIRCUITS OVER 100 FEET.
4. 120V, 1Ø LIGHTING CIRCUITING WIRED TO PANEL PB-W, CIRCUIT NUMBER AS SHOWN ON PLANS, UNLESS OTHERWISE NOTED.
5. CIRCUIT EXIT AND EMERGENCY LIGHTING AHEAD OF LOCAL SWITCHING.

PLAN NOTES:

1. LIGHTING SWITCH FOR ABOVE ROOM STORAGE SPACE.
2. PENDANT MOUNT, AT 18' ABOVE FINISHED FLOOR.
3. PENDANT MOUNT, AT 19' ABOVE FINISHED FLOOR (ABOVE TRAVELING BRIDGE CRANE PATH).

- DRAFT -
NOT FOR
CONSTRUCTION

ETIC ENGINEERING

ARCADIS

NO.	DATE	DESCRIPTION	GM/SPEC	DWN	CHKD	SUPV	APVD BY
0	2/2/15	SUPPLEMENTAL PRE-FINAL (90%) DESIGN		AJW	JMS	JPB	JEF

REVISIONS

APPROVED BY: JEF

SO	
SUPV	JPB
DSGN	JMS
DWN	AJW
CHKD	JPB
OK	JEF
DATE	2/2/15
SCALES	AS SHOWN

TOPOCK GROUNDWATER REMEDIATION PROJECT

WORKSHOP BUILDING
LIGHTING PLAN (2 OF 2)

GAS TRANSMISSION & DISTRIBUTION
PACIFIC GAS AND ELECTRIC COMPANY
SAN FRANCISCO, CALIFORNIA

MICROFILM
BILL OF MATL
DWG LIST
SUPSDS
SUPSD BY
SHEET NO. of SHEETS
E-15-07
REV 1

N1808

LUMINAIRE SCHEDULE

		LAMPS QUANTITY	LAMPS TYPE	CONNECTED WATTS			
A2		2	F32T8	64	ENCLOSED AND GASKETED FLUORESCENT LUMINAIRE, WITH IMPACT RESISTANT FIBERGLASS REINFORCED POLYESTER HOUSING, AND HIGH IMPACT ACRYLIC DIFFUSER.	LITHONIA CAT NO. DMW232-120-GEB10IS, DAY-BRITE, OR EQUAL.	MOUNT DIRECTLY TO CEILING SURFACE
A3		3	F3278	96	SAME AS TYPE A2, EXCEPT 3-LAMP	LITHONIA CAT NO. DMW332-120-GEB10IS, DAY-BRITE, OR EQUAL.	MOUNT DIRECTLY TO CEILING SURFACE
B		2	F54T5	108	FLUORESCENT HIGH OUTPUT HIGH-BAY LUMINAIRE, WITH FULL FIXTURE BODY, CLEAR ACRYLIC SHIELDING, AND CHAIN HANGER MOUNT ACCESSORIES	LITHONIA CAT NO. FSB-254L-ACL-MVOLT-LP835-HSD36	MOUNT AT 18' ABOVE FINISHED FLOOR
E		2	25W SBT	20	SELF-CONTAINED EMERGENCY LIGHTING UNIT WITH 120V CHARGER, 12V LEAD-CALCIUM BATTERY, AND CAPABILITY FOR THE ADDITION OF REMOTE HEADS	DUAL-LITE CAT NO. LM112-12V-D-I, EMERGI-LITE, OR EQUAL CAPACITY FOR SRHSW1225 REMOTE HEAD	MOUNT AT 8' ABOVE FINISHED FLOOR, UON
H		1	50W MH	50M	METAL HALIDE WALL PACK, WITH CUTOFF DISTRIBUTION, CORROSION-RESISTANT, DIE-CAST ALUMINUM HOUSING, AND PHOTOCELL, UL LISTED FOR WET LOCATIONS	LUMINAIRE: LITHONIA CAT NO. TWAC-50M-120-PE-LPI, OR EQUAL	MOUNT AT 8' ABOVE GRADE TO CENTERLINE OF LUMINAIRE, UON
R		1	25W SBT	20	REMOTE INCANDESCENT OUTDOOR HEAD FOR EMERGENCY LIGHTING UNIT E1 ABOVE.	DUAL-LITE CAT NO. SRHSW1225, EMERGI-LITE, OR EQUAL	EXTERIOR MOUNT AT 8' ABOVE GRADE TO CENTERLINE OF LUMINAIRE, UON
X		6	RED LED	4	RED LED EXIT SIGN, WITH THERMOPLASTIC HOUSING, NICKEL-CADMIUM BATTERY, WITH SELF-TESTING ELECTRONICS	DUAL LITE LXURWE-I, EMERGI-LITE OR EQUAL	WALL OR PENDANT MOUNT FROM CEILING

PANEL:	PB-W	LOCATION:	CHQ Workshop											CABINET MOUNTING:	SURFACE
VOLTS:	208Y/120V	PHASE:	3	WIRE:	4		ENCLOSURE: NEMA TYPE	1						RATING:	10 KAIC
FEED:	BOTTOM, 200A MAIN C/B	NEUTRAL:	100%	NOTE:											

LOAD SERVED	LOAD (KVA) A	LOAD (KVA) B	LOAD (KVA) C	BREAKER AMP	BREAKER POLE	CKT	PH	CKT	BREAKER AMP	BREAKER POLE	LOAD (KVA) A	LOAD (KVA) B	LOAD (KVA) C	LOAD SERVED
RECEPTACLES--SAMPLE/ADMIN, WATER SAMPLE	0.8			20	1	1	A	2	20	1	0.8			RECEPTACLES--SAMPLE/ADMIN, WATER SAMPLE PROCESSING
RECEPTACLES--SOIL SAMPLE PROCESSING, MECH		0.6		20	1	3	B	4	20	1		0.6		RECEPTACLES--SOIL SAMPLE PROCESSING, MECH ROOM, RR
RECEPTACLES--WORKSHOP			0.8	20	1	5	C	6	20	1			1.0	RECEPTACLES--WORKSHOP
RECEPTACLES--OUTDOOR	0.4			20	1	7	A	8	20	1	1.0			RECEPTACLES--STORAGE, CLEAN ROOM
RECEPTACLES--STORAGE, CLEAN ROOM		0.8		20	1	9	B	10	20	1				SPARE
SPARE				20	1	11	C	12	20	1			0.9	LIGHTING--WATER, SOIL SAMPLE PROCESSING, SAMPLE,
LIGHTING--STORAGE, CLEAN ROM	0.5			20	1	13	A	14	20	1	1.0			LIGHTING--WORKSHOP
LIGHTING--WORKSHOP		1.0		20	1	15	B	16	20	1		0.7		LIGHTING--STORAGE AREA
LIGHTING--STORAGE AREA			0.5	20	1	17	C	18	50	2			2.1	WELDER RECEPTACLE
WELDER RECEPTACLE	2.1			50	2	19	A	20			2.1			" "
" "		2.1				21	B	22				3.0		CRANE
FC-1/CU-1			1.4	20	2	23	C	24	35	3			3.0	" "
" "	1.4					25	A	26			3.0			" "
FC-2/CU-2		1.4		20	2	27	B	28	20	2		1.4		FC-1/CU-1
" "			1.4			29	C	30					1.4	" "
SPARE				20	1	31	A	32	20	2	1.4			FC-1/CU-1
FC-1/CU-1		1.4		20	2	33	B	34				1.4		" "
" "			1.4			35	C	36	20	1				SPARE
SPARE				20	1	37	A	38	20	1				SPARE
SPARE				20	1	39	B	40	20	1				SPARE
SPARE				20	1	41	C	42	20	1				SPARE
SUB-TOTAL CONNECTED KVA:	5.2										9.3			14.5
		7.3										7.1		14.4
			5.5										8.4	13.9
													TOTAL CONNECTED KVA:	42.8

Topock CHQ Utility Estimate					
Load Calculations					
	Connected Load			Service	Running
Equipment	Quantity	KVA		Factor	KVA
Double Wide Contractor Trailer	6	12		1	72
(20'x50' office trailer, 1000 SF)					
Lighting: 3 KW					
Recept: 3 KW (includes printer)					
HVAC: 12 KW					
Workshop (2500 SF)	1	43		1	43
Manufactured building, w/ 500 SF office space, clean room, bathroom and shower					
Lighting: as shown in PB-W					
Recept/Misc. Power: as shown in PB-W					
HVAC: as shown in PB-W					
Conference Room/Consultant Conference Trailer	1	20		1	20
(Three 10'x50' connected office trailers, 1500 SF)					
Lighting: 3 KW					
Recept: 5 KW					
HVAC: 12 KW					
PGE Office Trailer (1500 SF)	1	20		1	20
(Three 10'x50' connected office trailers, with 6 offices and two bathrooms, 1500 SF)					
Lighting: 3 KW					
Recept: 5 KW					
HVAC: 12 KW					
Lab	1	22		1	22
(Two 10'x50' connected office trailers, 1000 SF)					
Lighting: 2 KW					
Recept: 10 KW					
HVAC: 10 KW					
Bathroom Trailer (10'x20') (200 SF) (2 total)	2	3.5		1	7
(Two 10'x 20' trailers)					
Lighting: 1 KW					
Recept: 1 KW					
HVAC: 1.5 KW					
Water Tank Area					
Water Supply Pump, 10 HP	1	12		1	12
Firewater Pump, 10 HP	1	12		1	12
Remedy Produced Water Pump, 0.5 HP	1	1		1	1
Yard Area/Security Lighting	1	2		1	2
Soil Processing Area/Security Lighting	1	2		1	2
ATV Charging station	1	3		1	3
Total KVA					216
Total (125% of largest motor)					219
Total FLA (208V, 3-phase)					600

CHQ Anticipated Electrical Service:	120/208V, 3-phase, 4-wire, 800A
Anticipated Transformer Size for CHQ Service:	225 KVA
Anticipated Generator Size:	250 KVA
Estimate of Peak Load:	200 KVA
Estimate of Average Load:	125 KVA
Peak Load Characteristics (duration, frequency):	May through September, continuously 24 hours/day

- DRAFT -
NOT FOR
CONSTRUCTION

ETIC ENGINEERING

ARCADIS

NO.	DATE	DESCRIPTION	GM/SPEC	DWN	CHKD	SUPV	APVD BY
0	2/2/15	SUPPLEMENTAL PRE-FINAL (90%) DESIGN		AJW	JMS	JPB	JEF

REVISIONS

APPROVED BY: JEF

SO	
SUPV	JPB
DSGN	JMS
DWN	AJW
CHKD	JPB
OK	JEF
DATE	2/2/15
SCALES	AS SHOWN

TOPOCK GROUNDWATER REMEDIATION PROJECT

WORKSHOP BUILDING
ELECTRICAL SCHEDULES

GAS TRANSMISSION & DISTRIBUTION
PACIFIC GAS AND ELECTRIC COMPANY
SAN FRANCISCO, CALIFORNIA

MICROFILM
BILL OF MATL
DWG LIST
SUPSDS
SUPSD BY
SHEET NO. of SHEETS
E-15-08
REV 1

N1808

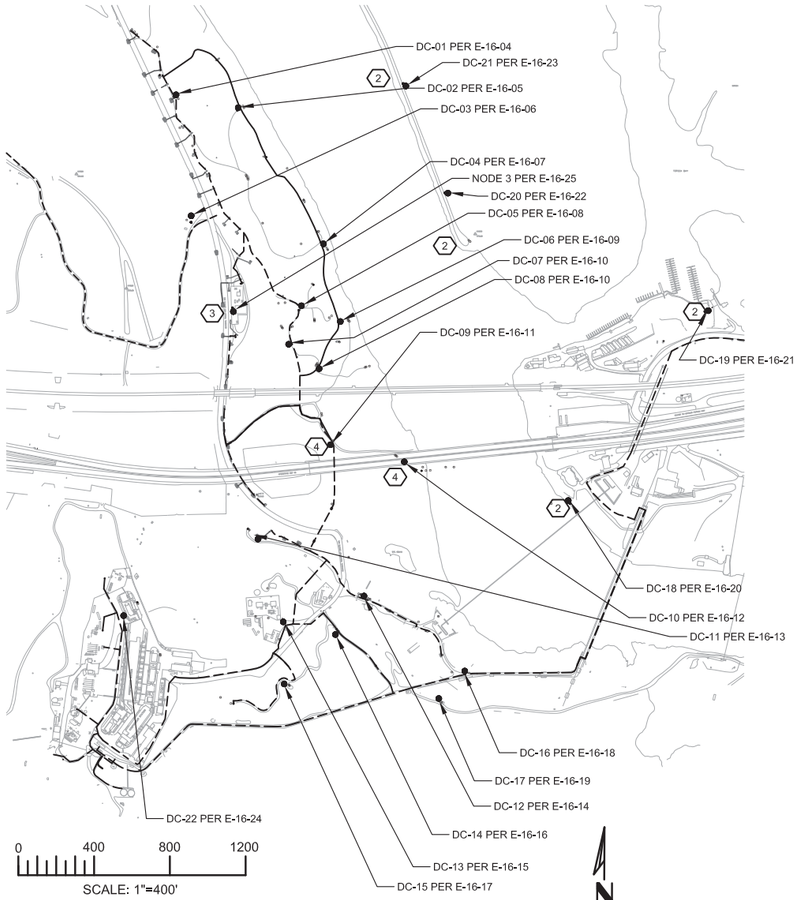

DATA COLLECTION STATION LOCATION SITE PLAN

1

DATA COLLECTION STATION	MONITORING WELL	XMTR	PROBE SENSOR	CONDUIT NUMBER	POWER (CONDUIT)	COMM. (CONDUIT)
DC-01	MW-B	T1	LEVEL	D-DC01A	IRZ-5 (L-DC01)	IRZ-5 (D-DC01)
	IRZ-9		LEVEL	D-DC01B		
	TW-4		LEVEL	D-DC01C		
	IRZ-5		LEVEL	D-DC01D		
	MW-A		LEVEL	D-DC01E		
	MW-35-135		LEVEL	D-DC01F		
	MW-35-060		LEVEL			
	IRZ-1		LEVEL	D-DC01G		

DATA COLLECTION STATION	MONITORING WELL	XMTR	PROBE SENSOR	CONDUIT NUMBER	POWER (CONDUIT)	COMM. (CONDUIT)
DC-02	RB-1	T1	LEVEL	D-DC02A	RB-1 (L-DC02)	RB-1 (D-DC02)
	MW-49-135		LEVEL	D-DC02B		
	MW-49-275		LEVEL			
	MW-49-365		LEVEL			
	MW-29		LEVEL	D-DC02C		
	RB-2		LEVEL	D-DC02D		
	MW-33-150	T2	LEVEL	D-DC02E		
	MW-33-210		LEVEL			
	MW-33-090		LEVEL			
	MW-33-040		LEVEL			

DATA COLLECTION STATION	MONITORING WELL	XMTR	PROBE SENSOR	CONDUIT NUMBER	POWER (CONDUIT)	COMM. (CONDUIT)
DC-03	TW-5	T1	LEVEL	D-DC03A	IRZ-16 (L-DC03)	IRZ-16 (D-DC03)

DATA COLLECTION STATION	MONITORING WELL	XMTR	PROBE SENSOR	CONDUIT NUMBER	POWER (CONDUIT)	COMM. (CONDUIT)
DC-04	MW-28-090	T1	LEVEL	D-DC04A	RB-4 (L-DC04)	RB-4 (D-DC04)
	MW-28-025		LEVEL			
	RB-3		LEVEL	D-DC04B		
	MW-O		LEVEL	D-DC04C		
	RB-4		LEVEL	D-DC04D		
	MW-46-175		LEVEL	D-DC04E		
	MW-46-205		LEVEL			
	MW-H		LEVEL	D-DC04F		

DATA COLLECTION STATION	MONITORING WELL	XMTR	PROBE SENSOR	CONDUIT NUMBER	POWER (CONDUIT)	COMM. (CONDUIT)
DC-05	MW-44-115	T1	LEVEL	D-DC05A	IRZ-17 (L-DC05)	DC-07 (D-DC05)
	MW-44-070		LEVEL			
	MW-44-125		LEVEL			
	PT-5D		LEVEL	D-DC05B		
	PT-5M		LEVEL	D-DC05C		
	PT-5S		LEVEL	D-DC05D		
	MW-36-090	T2	LEVEL	D-DC05E		
	MW-36-070		LEVEL			
	MW-36-100		LEVEL			
	MW-36-050		LEVEL			
	MW-36-040		LEVEL			
	MW-36-020		LEVEL			
	MW-45-095A		LEVEL	D-DC05F		
	MW-45-095B		LEVEL			

DATA COLLECTION STATION	MONITORING WELL	XMTR	PROBE SENSOR	CONDUIT NUMBER	POWER (CONDUIT)	COMM. (CONDUIT)
DC-06	MW-34-100	T1	LEVEL	D-DC06A	RB-5 (L-DC06)	RB-5 (D-DC06)
	MW-34-080		LEVEL			
	MW-34-055		LEVEL			

DATA COLLECTION STATION	MONITORING WELL	XMTR	PROBE SENSOR	CONDUIT NUMBER	POWER (CONDUIT)	COMM. (CONDUIT)
DC-07	MW-30-050	T1	LEVEL	D-DC07A	RB-5 (L-DC07)	DC-08 (D-DC07)
	MW-30-030		LEVEL			
	MW-39-040		LEVEL	D-DC07B		
	MW-39-070		LEVEL			
	MW-39-080		LEVEL			
	MW-39-050		LEVEL			
	MW-39-100		LEVEL			
	MW-39-060		LEVEL			

DATA COLLECTION STATION	MONITORING WELL	XMTR	PROBE SENSOR	CONDUIT NUMBER	POWER (CONDUIT)	COMM. (CONDUIT)
DC-08	MW-42-065	T1	LEVEL	D-DC08A	RB-5 (L-DC08)	RB-5 (D-DC08)
	MW-42-055		LEVEL			
	MW-42-030		LEVEL			
	MW-27-060		LEVEL	D-DC08B		
	MW-27-085		LEVEL			
	MW-27-020		LEVEL			
	RB-5		LEVEL	D-DC08C		

DATA COLLECTION STATION	MONITORING WELL	XMTR	PROBE SENSOR	CONDUIT NUMBER	POWER (CONDUIT)	COMM. (CONDUIT)
DC-09	MW-22	T1	LEVEL	D-DC09A	IRZ-39 (L-DC09)	IRZ-39 (F-DC09) 4
	MW-W		LEVEL	D-DC09B		
	MW-32-020		LEVEL	D-DC09C		
	MW-32-035		LEVEL			

DATA COLLECTION STATION	MONITORING WELL	XMTR	PROBE SENSOR	CONDUIT NUMBER	POWER (CONDUIT)	COMM. (CONDUIT)
DC-10	MW-43-025	T1	LEVEL	D-DC10A	IRZ-39 (L-DC10)	IRZ-39 (F-DC10)
	MW-43-075		LEVEL			
	MW-43-090		LEVEL			
	MW-52S	T2	LEVEL	D-DC10B		
	MW-53S		LEVEL	D-DC10C		
	MW-52M		LEVEL	D-DC10D		
	MW-52D		LEVEL	D-DC10E		
	MW-53M		LEVEL	D-DC10F		
	MW-53D		LEVEL	D-DC10G		

DATA COLLECTION STATION	MONITORING WELL	XMTR	PROBE SENSOR	CONDUIT NUMBER	POWER (CONDUIT)	COMM. (CONDUIT)
DC-11	MW-12	T1	LEVEL	D-DC11A	IRZ-39 (L-DC11)	IRZ-39 (D-DC11)

DATA COLLECTION STATION	MONITORING WELL	XMTR	PROBE SENSOR	CONDUIT NUMBER	POWER (CONDUIT)	COMM. (CONDUIT)
DC-12	MW-23-060	T1	LEVEL	D-DC12A	ER-1 (L-DC12)	ER-1 (D-DC12)
	MW-23-080		LEVEL			
	ER-1		LEVEL	D-DC12B		
	MW-62BR		LEVEL	D-DC12C		
	MW-62-190		LEVEL			
	MW-62-110		LEVEL			
	MW-62-065		LEVEL			
	ER-2		LEVEL	D-DC12D		

DATA COLLECTION STATION	MONITORING WELL	XMTR	PROBE SENSOR	CONDUIT NUMBER	POWER (CONDUIT)	COMM. (CONDUIT)
DC-13	MW-59-100	T1	LEVEL	D-DC13A	OP BUILDING (L-DC13)	OP BUILDING (D-DC13)
	MW-K		LEVEL	D-DC13B		
	TWB-2		LEVEL	D-DC13C		
	TWB-1		LEVEL	D-DC13D		

DATA COLLECTION STATION	MONITORING WELL	XMTR	PROBE SENSOR	CONDUIT NUMBER	POWER (CONDUIT)	COMM. (CONDUIT)
DC-14	MW-57-050	T1	LEVEL	D-DC14A	ER-1 (L-DC14)	ER-1 (D-DC14)
	MW-57-185		LEVEL			
	MW-57-070		LEVEL			
	MW-61-110		LEVEL	D-DC14B		

DATA COLLECTION STATION	MONITORING WELL	XMTR	PROBE SENSOR	CONDUIT NUMBER	POWER (CONDUIT)	COMM. (CONDUIT)
DC-15	MW-58-065	T1	LEVEL	D-DC15A	ER-6 (L-DC15)	ER-6 (D-DC15)
	MW-58-115		LEVEL			
	MW-58-205		LEVEL			
	ER-6		LEVEL	D-DC15B		
	MW-70BR-225		LEVEL	D-DC15C		
	MW-70-105		LEVEL			

DATA COLLECTION STATION	MONITORING WELL	XMTR	PROBE SENSOR	CONDUIT NUMBER	POWER (CONDUIT)	COMM. (CONDUIT)
DC-16	ER-5	T1	LEVEL	D-DC16A	ER-4 (L-DC16)	ER-4 (D-DC16)
	ER-4		LEVEL	D-DC16B		
	ER-3		LEVEL	D-DC16C		
	MW-T		LEVEL	D-DC16D		
	MW-63-065		LEVEL	D-DC16E		
	MW-72-080		LEVEL	D-DC16F		
	MW-73-080		LEVEL	D-DC16G		

DATA COLLECTION STATION	MONITORING WELL	XMTR	PROBE SENSOR	CONDUIT NUMBER	POWER (CONDUIT)	COMM. (CONDUIT)
DC-17	MW-64-150	T1	LEVEL	D-DC17A	ER-4 (L-DC17)	ER-4 (D-DC17)
	MW-64-205		LEVEL			
	MW-64-260		LEVEL			

DATA COLLECTION STATION	MONITORING WELL	XMTR	PROBE SENSOR	CONDUIT NUMBER	POWER (CONDUIT)	COMM. (CONDUIT)
DC-18 2	MW-56S	T1	LEVEL	D-DC18A	SOLAR	RADIO
	MW-56M		LEVEL	D-DC18B		
	MW-56D		LEVEL	D-DC18C		

DATA COLLECTION STATION	MONITORING WELL	XMTR	PROBE SENSOR	CONDUIT NUMBER	POWER (CONDUIT)	COMM. (CONDUIT)
DC-19 2	MW-55-045	T1	LEVEL	D-DC19A	SOLAR	RADIO
	MW-55-120		LEVEL			

DATA COLLECTION STATION	MONITORING WELL	XMTR	PROBE SENSOR	CONDUIT NUMBER	POWER (CONDUIT)	COMM. (CONDUIT)
DC-20 2	MW-54-140	T1	LEVEL	D-DC20A	SOLAR	RADIO
	MW-54-085		LEVEL			
	MW-54-195		LEVEL			
	MW-Y-060		LEVEL	D-DC20B		
	MW-Y-120		LEVEL			
	MW-Y-220		LEVEL	D-DC20C		
	MW-Y-300		LEVEL			

DATA COLLECTION STATION	MONITORING WELL	XMTR	PROBE SENSOR	CONDUIT NUMBER	POWER (CONDUIT)	COMM. (CONDUIT)
DC-21 2	MW-X	T1	LEVEL	D-DC21A	SOLAR	RADIO

DATA COLLECTION STATION	MONITORING WELL	XMTR	PROBE SENSOR	CONDUIT NUMBER	POWER (CONDUIT)	COMM. (CONDUIT)
DC-22 4	MW-67-185	T1	LEVEL	D-DC22A	LP-REM (L-DC22)	REM-COM (D-DC22)
	MW-67-225		LEVEL			
	MW-67-260		LEVEL			
	MW-68BR-280		LEVEL	D-DC22B		
	MW-68-240		LEVEL			
	MW-68-180		LEVEL			

DATA COLLECTION STATION	MONITORING WELL	XMTR	PROBE SENSOR	CONDUIT NUMBER	POWER (CONDUIT)	COMM. (CONDUIT)
NODE 3	IRZ-23	T1	LEVEL	D-DC23A	N/A	N/A
	TW-3D		LEVEL	D-DC23B		
	TW-2D		LEVEL	D-DC23C		
	TW-2S		LEVEL	D-DC23D		

DRAWING REFERENCED NOTES:

1. SEE DWG E-16-04 THROUGH E-16-25 FOR DATA COLLECTION STATION LOCATIONS
2. RADIO COMMUNICATIONS FOR THIS DATA COLLETION SITE
3. NODE 3 WILL HOUSE THE LEVEL ANALYZER FOR THE WELLS IN THE AREA.
4. DATA COLLECTION STATION BEING SUPPLIED COMMUNICATIONS WITH FIBER.

DRAFT
NOT FOR
CONSTRUCTION

FRISCH ENGINEERING, INC.
CONSULTING ELECTRICAL ENGINEERS
13405 FOLSOM BLVD, UNIT 600
FOLSOM, CA 95630
PH 916 353 1025
WWW.FRISCHENGINEERING.COM

CH2MHILL®

NO.	DATE	DESCRIPTION	GM/SPEC	DWN	CHKD	SUPV	APVD BY
1	12/30/14	SUPPLEMENTAL PRE-FINAL (90%) DESIGN		MBY			TPF
0	9/8/14	PRE-FINAL (90%) DESIGN		MBY			TPF

REVISIONS

APPROVED BY: TPF
SO
SUPV TPF
DSGN MBY
DWN MBY, NC
CHKD MF
OK TPF
DATE
SCALES N/A

TOPOCK GROUNDWATER REMEDIATION PROJECT
MONITORING WELLS
DATA COLLECTION STATIONS
SITE PLAN
GAS TRANSMISSION & DISTRIBUTION
PACIFIC GAS AND ELECTRIC COMPANY
SAN FRANCISCO, CALIFORNIA

MICROFILM
BILL OF MATL
DWG LIST
SUPSDS
SUPSD BY
SHEET NO. E-16-01 of SHEETS
REV 0

FILENAME: FE-E-XXX-1601AD.DWG
PLOT DATE: Dec 08, 2014 PLOT TIME: 2:04:17pm

N1808

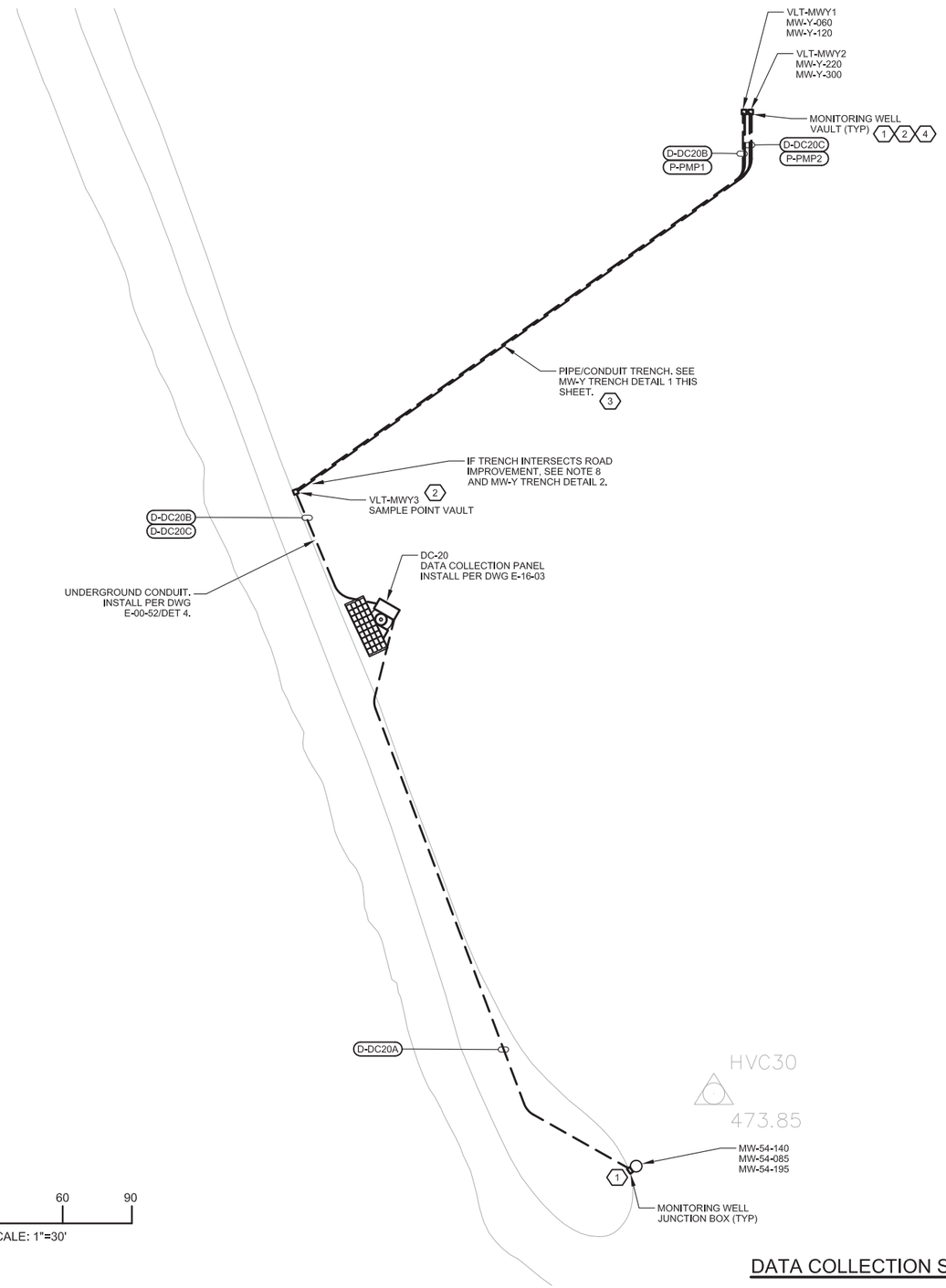

DATA COLLECTION STATION DC-20 5 6

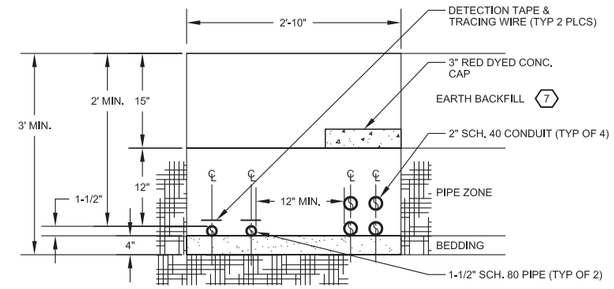

MW-Y TRENCH DETAIL 1

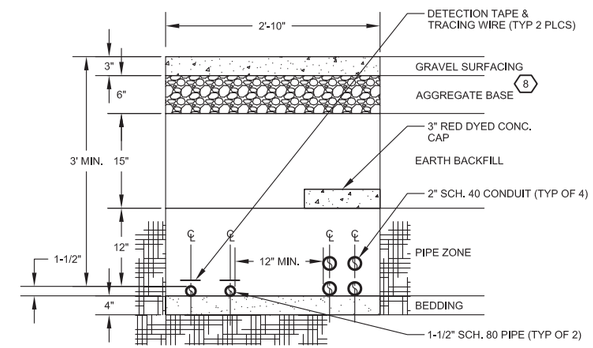

MW-Y TRENCH DETAIL 2

ELECTRICAL PLAN NOTES:

1. SEE ELECTRICAL PLAN NOTES ON DRAWING E-00-02.

NOTES REFERENCED IN DRAWING:

1. WALLMOUNT 10"X8"X4" NEMA 3R LOCKABLE TYPE JUNCTION BOX IN VAULT. PROVIDE HOFFMAN A-1008CHS OR EQUAL WITH EXTERNAL PADLOCK ATTACHMENT.
2. INSTALL 3 EMCO WHEATON VAULTS A0717-724VWL OR APPROVED EQUAL. TWO VAULTS LOCATED AT WELL SITE WITH ONE FOR EACH BOREHOLE (VLT-MWY1 AND -MWY2) AND ONE SAMPLE POINT VAULT (VLT-MWY3) LOCATED WITHIN 5 FEET OF ROAD EDGE. PROVIDE (1) 1-1/2 INCH SCH 80 PVC PIPE AND (1) 1 INCH SCH 40 PVC CONDUIT PENETRATIONS ON EACH WELL VAULT WITH MINIMUM DEPTH OF 12". SAMPLE POINT VAULT WILL HAVE 4 PENETRATIONS. VAULT PENETRATIONS WILL BE ACCOMPLISHED WITH SCH. 40 STEEL PIPE SLEEVE PASSING THROUGH WALL AND SEAL WELD AROUND PIPE ON BOTH SIDES. SLEEVES SHALL BE 2-1/2 INCH FOR PIPE AND 2 INCH FOR CONDUIT. INSTALL PIPE WALL PENETRATION SEAL (METRAFLEX OR EQUAL).
3. ROUTE PIPE AND CONDUIT BETWEEN VAULTS WITH MINIMUM BURIAL DEPTH OF 18". PIPE WILL BE USED TO CONTAIN 2 - ¼" DIA. ID (X 3/8" OD) PTFE FLEXIBLE TUBING (ALTAFLUOR 100 OR EQUAL). PROVIDE 15' EXTRA TUBING COILED INSIDE SAMPLE POINT VAULT (VLT-MWY3) WITH BARBED PVC CONNECTORS. INSTALL 2 POWER CABLES SUPPLIED WITH PUMP INSIDE EACH CONDUIT.
4. FURNISH (4) SS MEGA-MONSOON PUMPS (PROACTIVE ENVIRONMENTAL PRODUCTS). PROVIDE SUFFICIENT CABLE TO OPERATE PUMPS AT SPECIFIED DEPTHS. ROUTE PUMP CABLE THROUGH CONDUIT FROM VLT-MWY3 TO VLT-MWY1 AND VLT-MWY2. FURNISH MANUFACTURERS STANDARD CABLE CONNECTIONS FOR CONTROLLER AND SPRING STYLE BATTERY CLIPS CONNECTIONS TO 12 VOLT BATTERY.
5. ALL CONDUITS SHOWN ARE REQUIRED TO BE INSTALLED TO ENSURE A COMPLETE SYSTEM. WHERE POSSIBLE COORDINATE CONDUIT ROUTING WITH ELECTRICAL TRENCH SECTIONS SHOWN ON THE CIVIL DRAWINGS AND COMBINE CONDUIT IN COMMON TRENCH.
6. MONITORING WELL LOCATIONS SHOWN ARE APPROXIMATE. ACTUAL MONITORING WELL LOCATIONS ARE DEFINED BY THE CIVIL PLANS AND SPECIFICATIONS.
7. TRENCH BACKFILL COMPLETION TO BE 12" MINIMUM THICKNESS. PLACE NATIVE MATERIAL AND MATCH TO EXISTING GRADE. TRENCH CUT SLOPE TO BE DETERMINED BY CONTRACTOR PER OSHA GUIDELINES. WATER PIPES TO BE PLACED ON COMPACTED BED OF GRANULAR FILL 4" MINIMUM THICKNESS.
8. TRENCH BACKFILL COMPLETION TO BE 12" MINIMUM THICKNESS. IF WITHIN ROAD IMPROVEMENT, PLACE COMPACTED GRAVEL BASE AND MATCH TO FINISHED GRADE. OTHERWISE PLACE NATIVE MATERIAL AND MATCH TO EXISTING GRADE. TRENCH CUT SLOPE TO BE DETERMINED BY CONTRACTOR PER OSHA GUIDELINES. WATER PIPES TO BE PLACED ON COMPACTED BED OF GRANULAR FILL 4" MINIMUM THICKNESS.

DRAFT
NOT FOR
CONSTRUCTION

FRISCH ENGINEERING, INC.
CONSULTING ELECTRICAL ENGINEERS
13405 FOLSOM BLVD, UNIT 600
FOLSOM, CA 95630
PH 916 353 1025
WWW.FRISCHENGINEERING.COM

CH2MHILL®

NO.	DATE	DESCRIPTION	GM/SPEC	DWN	CHKD	SUPV	APVD BY
1	12/30/14	SUPPLEMENTAL PRE-FINAL (90%) DESIGN		MBY			TPF
0	9/8/14	PRE-FINAL (90%) DESIGN		MBY			TPF

REVISIONS

APPROVED BY: TPF
SO
SUPV TPF
DSGN MBY
DWN MBY, NC
CHKD MF
OK TPF
DATE
SCALES N/A

TOPOCK GROUNDWATER REMEDIATION PROJECT
MONITORING WELL
DATA COLLECTION SYSTEM
SHEET 19
GAS TRANSMISSION & DISTRIBUTION
PACIFIC GAS AND ELECTRIC COMPANY
SAN FRANCISCO, CALIFORNIA

MICROFILM
BILL OF MATL
DWG LIST
SUPSDS
SUPSD BY
SHEET NO. of SHEETS
E-16-22
REV 0

FILENAME: FE-E-XXX-1615AD.dwg
PLOT DATE: Dec 08, 2014 PLOT TIME: 4:15:00pm

N1808

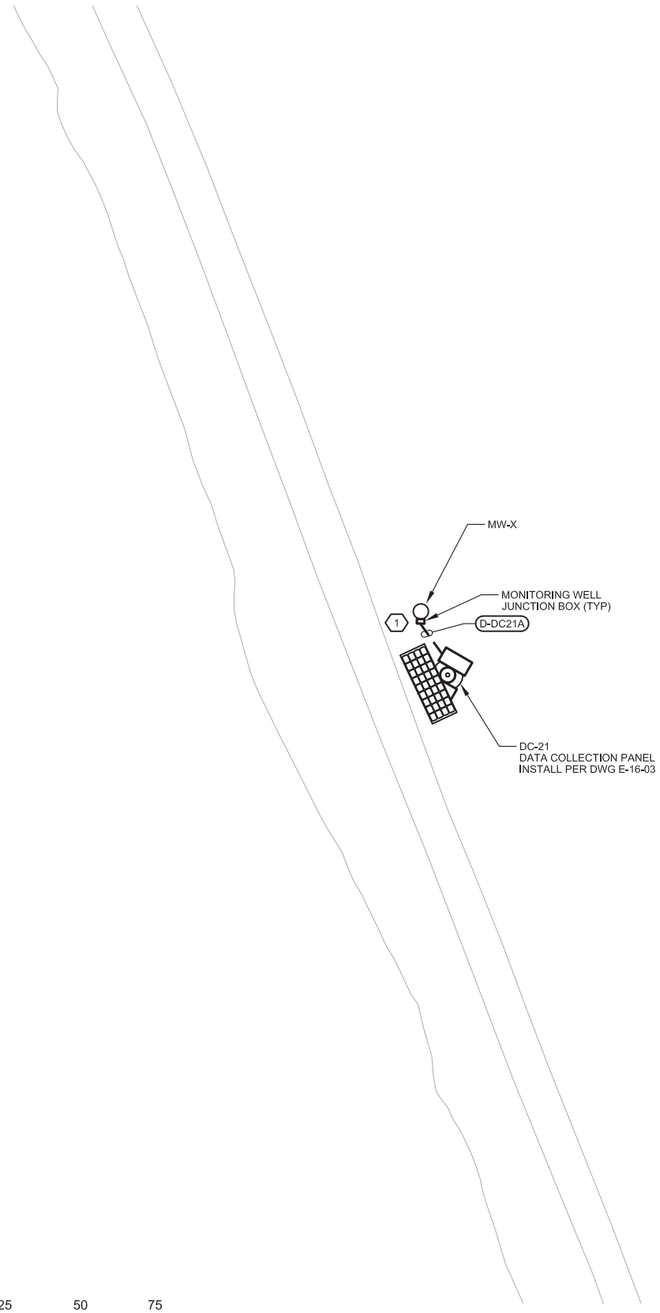

ELECTRICAL PLAN NOTES:

1. SEE ELECTRICAL PLAN NOTES ON DRAWING E-00-02.

NOTES REFERENCED IN DRAWING:

1. INSTALL MONITORING WELL JUNCTION BOX PER DWG E-00-52/DET 6 (TYP).
2. ALL CONDUITS SHOWN ARE REQUIRED TO BE INSTALLED TO ENSURE A COMPLETE SYSTEM. WHERE POSSIBLE COORDINATE CONDUIT ROUTING WITH ELECTRICAL TRENCH SECTIONS SHOWN ON THE CIVIL DRAWINGS AND COMBINE CONDUIT IN COMMON TRENCH.
3. MONITORING WELL LOCATIONS SHOWN ARE APPROXIMATE. ACTUAL MONITORING WELL LOCATIONS ARE DEFINED BY THE CIVIL PLANS AND SPECIFICATIONS.

0 25 50 75
SCALE: 1"=25'

DATA COLLECTION STATION DC-21 (2)(3)

DRAFT
NOT FOR
CONSTRUCTION

FRISCH ENGINEERING, INC.
CONSULTING ELECTRICAL ENGINEERS
13405 FOLSOM BLVD, UNIT 600
FOLSOM, CA 95630
PH 916 353 1025
WWW.FRISCHENGINEERING.COM

CH2MHILL®

NO.	DATE	DESCRIPTION	GM/SPEC	DWN	CHKD	SUPV	APVD BY
1	12/30/14	SUPPLEMENTAL PRE-FINAL (90%) DESIGN		MBY			TPF
0	9/8/14	PRE-FINAL (90%) DESIGN		MBY			TPF

REVISIONS

APPROVED BY: TPF
SO
SUPV TPF
DSGN MBY
DWN MBY, NC
CHKD MF
OK TPF
DATE
SCALES N/A

TOPOCK GROUNDWATER REMEDIATION PROJECT
MONITORING WELL
DATA COLLECTION SYSTEM
SHEET 20
GAS TRANSMISSION & DISTRIBUTION
PACIFIC GAS AND ELECTRIC COMPANY
SAN FRANCISCO, CALIFORNIA

MICROFILM
BILL OF MATL
DWG LIST
SUPSDS
SUPSD BY
SHEET NO. of SHEETS
E-16-23
REV 0

PLOT DATE: Dec 08, 2014 PLOT TIME: 23:24:41pm
FILENAME: FE-E-XXX-1615AD.dwg