

Pacific Gas and Electric Company®

PG&E Topock
Compressor Station
Needles, California

Basis of Design Report / Final (100%) Design Submittal for the Final Groundwater Remedy

Appendix L: Operation and Maintenance Manual

November 2015

CH2MHILL®

ES102411163118BAO

Basis of Design Report Appendix L

Operation and Maintenance Manual Final (100%) Design Submittal for the Final Groundwater Remedy

PG&E Topock Compressor Station Needles, California

Prepared for

Pacific Gas & Electric Company

November 2015

CH2MHILL®
155 Grand Avenue
Suite 800
Oakland, CA 94612

Contents

Acronyms and Abbreviations ..... **L-v**

L1 Introduction **L1-1**
L1.1 Overview of Groundwater Remedy and Requirements L1-1
L1.1.1 Remedial Action Objectives, Completion Criteria/Performance Standards, and Short-Term Goals L1-2
L1.1.2 Incorporation of ARARs and EIR Mitigation Measures into Operation and Maintenance L1-3
L1.2 Organization and Content of O&M Manual L1-4

L2 Project Management, Communication Framework, and Workers Training **L2-1**
L2.1 Project Management L2-1
L2.2 Summary of Communication Procedures and Protocols L2-1
L2.3 Workers Training L2-11

L3 Data Management, Documentation, and Reporting **L3-1**
L3.1 Data Management L3-1
L3.2 Recordkeeping L3-2
L3.3 Reporting L3-2

L4 Corrective Measures/Remedial Action Completion Criteria **L4-1**

L5 References **L5-1**

Exhibits

L2.1-1 Project Team Organization Chart 2-2

L2.1-2 Key Project Personnel, Qualifications, Levels of Authority and Responsibility, and Lines of Communication 2-3

L2.2-1 Communication Framework During Operation and Maintenance 2-5

L2.2-2 Quarterly Progress Report Template 2-9

L2.2-3 Work Variance Request Form 2-11

L3.1-1 Simplified Data Management Process 3-3

Tables *(on CD-ROM only)*

L1.1-1 Summary of Compliance with EIR Mitigation Measures

L1.1-2 Summary of Compliance with Cultural Impact Minimization Program (CIMP) Protocols

L1.1-3 Summary of Compliance with Identified ARARs

L1.1-3A Information for the Havasu National Wildlife Refuge's Appropriate Use Analysis and Compatibility Determination (AUA/CD)

L1.1-4 Summary of Compliance with Applicable Programmatic Agreement (PA) Stipulations

L1.1-5 Summary of Compliance with Applicable Cultural and Historic Properties Management Plan (CHPMP) Provisions

Additional Volumes Attached to this O&M Manual

Volume 1: Operation and Maintenance Plan

Volume 2: Sampling and Monitoring Plan

Volume 3: Contingency Plan

Volume 4: Soil Management Plan

Volume 5: Project Health and Safety Plan

Acronyms and Abbreviations

µg/L	micrograms per liter
ADEQ	Arizona Department of Environmental Quality
AE	Applied Earthworks
AMM	Avoidance and Minimization Measure
AOC	Area of Concern
APE	Area of Potential Effect
ARARs	applicable or relevant and appropriate requirements
BLM	U.S. Bureau of Land Management
BMP	Best Management Practice
BOD	Basis of Design
BOR	U.S. Bureau of Reclamation
CACA	Corrective Action Consent Agreement
Caltrans	California Department of Transportation
CD	Consent Decree
CDFW	California Department of Fish and Wildlife
CEQA	California Environmental Quality Act
CERCLA	Comprehensive Environmental Response, Compensation, and Liability Act
CESA	California Endangered Species Act
CHPMP	Cultural and Historic Properties Management Plan
CIMP	Cultural Impact Mitigation Program
CMI	Corrective Measures Implementation
COC	constituent of concern
COPC	constituent of potential concern
Cr(III)	trivalent chromium
Cr(T)	total chromium
Cr(VI)	hexavalent chromium
CRIT	Colorado River Indian Tribes
CTF	Clearinghouse Task Force
CUPA	Certified Unified Program Agency
CWG	Consultative Working Group
DOI	United States Department of the Interior
DTSC	California Department of Toxic Substances Control
EIR	environmental impact report

EPCRA	Emergency Planning and Community Right-to-Know Act
FCR	Field Contact Representative
HSP	health and safety plan
HNWR	Havasu National Wildlife Refuge
ICs	institutional controls
IRL	Inner Recirculation Loop
IRZ	In-situ Reactive Zone
MMRP	Mitigation Monitoring and Reporting Program
MNA	monitored natural attenuation
MOU	Memorandum of Understanding
MWD	Metropolitan Water District
NRC	National Response Center
NTH	National Trails Highway
O&M	operation and maintenance
OES	California Governor's Office of Emergency Services
OF	Operational and Functional
OPS	Operating Properly and Successfully
PG&E	Pacific Gas and Electric Company
PA	Programmatic Agreement
PBA	Programmatic Biological Assessment
PM	Project Manager
QA	quality assurance
QC	quality control
RA	Remedial Action
RAO	remedial action objective
RCRA	Resource Conservation and Recovery Act
RD	Remedial Design
ROD	Record of Decision
SOP	Standard Operating Procedure
SWMU	Solid Waste Management Unit
SWPPP	Stormwater Pollution Prevention Plan
SWRCB	State Water Resources Control Board
TCS	Topock Compressor Station
TLP	Topock Leadership Partnership
TWG	Technical Working Group
USEPA	U.S. Environmental Protection Agency
USFWS	U.S. Fish and Wildlife Services

SECTION L1

Introduction

This Operation and Maintenance (O&M) Manual is Appendix L of the Basis of Design (BOD) Report/Final (100%) Design Submittal. The O&M Manual (or manual) consists of plans for operation and maintenance, sampling and monitoring, and management of contingencies associated with the selected final groundwater remedy at the Pacific Gas and Electric Company (PG&E) Topock Compressor Station (TCS, or the Compressor Station) in San Bernardino County, California. In addition, the O&M Manual also includes a Soil Management Plan and a Health and Safety Plan (HSP) for remedy O&M. (The terms "final groundwater remedy" and "remedy" are interchangeable as used throughout this document; other equivalent terms used herein include "selected groundwater remedy" and "groundwater remedy.")

The California Department of Toxic Substances Control (DTSC) is the state lead agency overseeing corrective actions at the Compressor Station in accordance with the Resource Conservation and Recovery Act (RCRA) Corrective Action. In February 1996, PG&E and DTSC entered into a Corrective Action Consent Agreement (CACA) pursuant to Section 25187 of the California Health and Safety Code (DTSC 1996). The U.S. Department of the Interior (DOI) is the lead federal agency overseeing response actions on or emanating from land under its jurisdiction, custody, or control near the Compressor Station pursuant to the Comprehensive Environmental Response, Compensation, and Liability Act (CERCLA). In July 2005, PG&E and the federal agencies (DOI, U.S. Bureau of Land Management (BLM), U.S. Fish and Wildlife Service (USFWS), and U.S. Bureau of Reclamation [BOR]) entered into an Administrative Consent Agreement (DOI 2005). A Remedial Design/Remedial Action Consent Decree (CD) between the United States, on behalf of the DOI, and PG&E (DOI 2013) was approved by the United States District Court for the Central District of California in November 2013. DOI and DTSC executed a Memorandum of Understanding (MOU) concerning the coordination in overseeing the implementation of groundwater response action at TCS on November 22, 2011 (DTSC and DOI 2011). In a coordinated effort, DOI and DTSC selected the final groundwater remedy to address chromium in groundwater at Solid Waste Management Unit (SWMU) 1/ Area of Concern (AOC) 1 and AOC 10.

In conformance with the 1996 CACA (DTSC 1996) and the CD requirements (DOI 2013), this O&M Manual builds on the framework established in the Revised Groundwater Corrective Measures Implementation/Remedial Design (CMI/RD) Work Plan for SWMU 1/ AOC 1 and AOC 10 (CH2M HILL 2011). The Revised CMI/RD Work Plan was approved by the DOI on November 3, 2011 for use in development of the groundwater remedy design documents and associated plans (DOI 2011). The CMI/RD Work Plan and other key project documents may be reviewed on the DTSC's Topock Compressor Station web site: http://www.dtsc-topock.com.

The following subsections describe the remedy and the remedial action objectives (RAOs), summarize the applicable or relevant and appropriate requirements (ARARs) and EIR Mitigation Measures, and describe the content and organization of this O&M Manual.

L1.1 Overview of Groundwater Remedy and Requirements

The final groundwater remedy, its objectives, and its regulatory requirements are described below. The groundwater remedy includes:

- An In-situ Reactive Zone (IRZ) using a line of wells installed along National Trails Highway (NTH) that may be used as both injection and extraction wells to circulate groundwater and distribute an organic carbon source to promote reduction of the hexavalent chromium (Cr[VI]) to trivalent chromium (Cr[III]).
- An Inner Recirculation Loop (IRL) comprised of:
  - River Bank Extraction Wells along the Colorado River to provide hydraulic capture of Cr(VI) groundwater concentrations, clean up the floodplain downgradient of the IRZ, enhance the flow of contaminated groundwater through the NTH IRZ line, and control migration of IRZ-generated by-products.

  - IRL injection wells to re-inject groundwater extracted from the River Bank Extraction Wells (which may be amended with an organic carbon source) and/or inject fresh water in the upgradient portion of the Cr(VI) plume to flush the plume through the NTH IRZ.

- A TCS Recirculation Loop comprised of:
  - East Ravine Extraction Wells in the eastern (downgradient) end of the East Ravine to provide hydraulic capture of contaminated groundwater in bedrock.
  - TCS injection wells located upgradient of the TCS for the re-injection of groundwater extracted from the East Ravine Extraction Wells and Transwestern Bench Extraction Wells, which will be amended with an organic carbon source to promote reduction of the Cr(VI) to Cr(III) and remove elevated Cr(VI) groundwater concentrations from the alluvial aquifer in the vicinity of the TCS.
- Freshwater injection wells to inject freshwater into wells upgradient of the Cr(VI) plume to control and confine the plume migration to the west, to assist with flushing the chromium plume through the NTH IRZ, and to constrain westward spread of carbon-amended water and in-situ byproducts from the Inner Recirculation Loop.
- A monitoring well network that consists of existing site wells and new monitoring wells.
- Institutional controls (ICs) to restrict surface land uses and prevent the use of groundwater.
- Monitored natural attenuation (MNA) as a long-term component to address residual chromium that may remain in recalcitrant portions of the aquifer after enhanced in-situ treatment and optimized system performance.

L1.1.1 Remedial Action Objectives, Completion Criteria/Performance Standards, and Short-Term Goals

The RAOs for the groundwater remedy are to:

1. Prevent ingestion of groundwater as a potable water source having Cr(VI) in excess of the regional background concentration of 32 micrograms per liter (µg/L).
2. Prevent or minimize migration of total chromium (Cr[T]) and Cr(VI) in groundwater to ensure concentrations in surface water do not exceed water quality standards that support the designated beneficial uses of the Colorado River (11 µg/L Cr[VI]).
3. Reduce the mass of Cr(T) and Cr(VI) in groundwater at the site to achieve compliance with ARARs in groundwater. This RAO will be achieved through the cleanup goal of the regional background concentration of 32 µg/L of Cr(VI).
4. Ensure that the geographic location of the target remediation area does not permanently expand following completion of the remedial action.

The completion criteria or performance standards for the groundwater remedy are mainly driven by RAO #3, reducing Cr(VI) concentrations throughout the plume to concentrations of 32 µg/L or less. Attainment of the completion criteria or achievement of performance standards (Cr[VI] concentrations of 32 µg/L or less) is intended to be applied throughout the area of contaminated groundwater. In establishing this criterion, the following are recognized:

- Attaining the cleanup criterion of 32 µg/L Cr(VI) in groundwater may be achieved through active remediation or through MNA after active remediation has been employed and optimized.
- Different areas of the plume may reach the cleanup criterion of 32 µg/L Cr(VI) in groundwater at different times.

Additional discussions about the Corrective Measures/Remedial Action Completion Criteria are included in Section L4.

In addition to the RAOs, short-term goals and criteria are being developed in coordination with DTSC and DOI to facilitate future evaluations of remedy performance including assessments of whether the remedy is Operational and Functional (OF) and Operating Properly and Successfully (OPS).

Pursuant to CERCLA, 40 CFR § 300.435(f)(2), the groundwater remedy becomes OF either one year after construction is complete, or when the groundwater remedy is determined by DOI to be functioning properly and is performing as designed, whichever is earlier. DOI may grant extensions to the one-year period, as appropriate. This period is often referred to as "commissioning" or "shakedown," when the construction contractor(s) make minor adjustments as necessary to ensure the remedy is operating as designed.

Pursuant to Exhibit A to the Settlement Agreement between DTSC and the FMIT (DTSC 2012), the groundwater remedy is considered to be OPS when a) the remedy is operating as designed, b) the information obtained from remedy operation indicates that the remedy is protective of human health and the environment, and c) the remedy is likely to be able to achieve the cleanup levels or performance goals delineated in the DTSC's Statement of Basis (DTSC 2011a) and the DOI's Record of Decision (ROD; DOI 2010) for the groundwater remedy at the PG&E Topock Site. In general, OPS is expected within 1 to 3 years of the beginning of remedy start-up.

L1.1.2 Incorporation of ARARs and EIR Mitigation Measures into Operation and Maintenance

CERCLA remedial actions are required to comply with the substantive requirements of identified ARARs. Therefore, the operation and maintenance as well as sampling and monitoring of the final groundwater remedy incorporates the requirements of ARARs documented in the ROD (DOI 2010). These ARARs include federal, California, and Arizona chemical-specific, location-specific, and action-specific ARARs. The chemical-specific ARARs for the site constituents of concern (COCs) (Cr[VI] and Cr[T]) have already been incorporated into the RAOs, ensuring that compliance with these ARARs (for the site COCs) will be attained when the remedy is complete (defined by attainment of the RAOs). Evaluation of the compliance with chemical specific ARARs for arsenic in the freshwater source is addressed in Table L1.1-3, Summary of Compliance with Identified ARARs (Items 2, 52, 99, and 100).

In conformance with the California Environmental Quality Act (CEQA), DTSC prepared and certified the Final Environmental Impact Report (EIR) (DTSC 2011b), and adopted a Mitigation Monitoring and Reporting Program (MMRP) for the groundwater remedy. The MMRP includes mitigation measures for various resources, including aesthetic, air quality, cultural, biological, geology and soils, hazardous materials, hydrology and water quality, noise, and water supply resources. An addendum to the EIR (2013 Addendum; DTSC 2013) was subsequently issued on August 2, 2013 to evaluate potential alternative freshwater supply locations in order to identify a freshwater supply source of adequate quantity and quality to be used in the Topock groundwater remedy.

Identification and demonstration of how the identified EIR mitigation measures and ARARs have been incorporated into the design and remedy O&M are summarized and discussed in tables presented in Section 6 of the Final BOD Report; copies of these tables are presented as Tables L1.1-1 and L1.1-3, respectively, at the end of this volume (for the reader's convenience).[1] In addition, a summary of compliance with applicable Cultural Impact Mitigation Program (CIMP; PG&E 2015) protocols, Programmatic Agreement (PA; BLM 2010) stipulations, and

[1] The compliance tables in this O&M Manual are copied directly from Section 6 of the Basis of Design Report to which this O&M Manual is an appendix. The table numbers have been changed, but the contents of the tables are unchanged. This includes the reference citations, which correspond to the References List (Section 9) of the BOD Report, not the References List in this O&M Manual. Please refer to Section 9 of the BOD Report to identify the sources cited in these tables in the O&M Manual. References within the tables to Tables 6.1-1, 6.1-2, 6.2-1, 6.2-1A, 6.2-2, and 6.2-3 of the BOD Report correspond to Tables L1.1-1, L1.1-2, L1.1-3, L1.1-3A, L1.1-4, and L1.1-5, respectively, in this document.

Cultural and Historic Properties Management Plan (CHPMP; BLM 2012) provisions[2] are included in Tables L1.1-2, L1.1-4, and L1.1-5, respectively.

L1.2 Organization and Content of O&M Manual

In conformance with the 1996 CACA and the 2013 CD requirements, this O&M Manual is organized into the following sections:

- Section 1 describes the groundwater remedy and the RAOs, summarizes how the plans included herein have complied and will continue to comply with the ARARs and EIR MMRP, and describes the organization and content of this O&M Manual.
- Section 2 describes the levels of authority and responsibility (including organization chart), lines of communication, and the qualifications /training of personnel who will operate and maintain the corrective measure.
- Section 3 describes the framework for the evaluation of analytical data and field measurements, along with the documentation, management, and maintenance of information. Details are presented in Volume 2 of the manual.
- Section 4 discusses the process and criteria for determining when the corrective measure/remedial action may cease. This section also describes the process and criteria for determining when maintenance and monitoring may cease.
- Section 5 provides reference information for the works cited in this report.

This O&M Manual also includes the following five volumes consisting of related project plans:

- **Volume 1 (Operation and Maintenance Plan)** describes the main remedy system and its supporting systems, discusses procedures for O&M including start-up/shutdown and replacement schedule for equipment and system alarms, describes means and methods for well and pipeline maintenance, and describes waste management practices and other site management practices such as road maintenance, stormwater pollution prevention, and hazardous material management. Detailed standard operating procedures (SOPs) for O&M tasks are included in this volume.
- **Volume 2 (Sampling and Monitoring Plan)** presents the goals and data quality objectives for sampling and monitoring of groundwater, surface water, and process water, along with details (i.e., sampling locations, analytes, and sampling frequencies) for various monitoring programs including remedy compliance monitoring, in-situ remediation performance monitoring (including monitoring of the upland injected water quality), monitoring for other constituents of potential concern (COPCs) (selenium, molybdenum, and nitrate), monitoring of freshwater source, process control monitoring for the remedy-produced water management system, and domestic/private well monitoring. This volume also includes sampling methods and procedures as well as data management, documentation, and reporting.
- **Volume 3 (Contingency Plan)** presents contingency planning and procedures to address potential operational problems, equipment failures, failures due to “acts of god,” etc.
- **Volume 4 (Soil Management Plan)** presents sampling protocols and analysis for soil and the plan for managing soils during O&M, consistent with the established displaced material handling protocols. Also presented are a sampling and analysis plan to document baseline soil conditions prior to remedy implementation, and a plan to implement Best Management Practices (BMPs) to prevent or reduce storm water pollution related to soil storage activities during remedy O&M.

[2] Per DOI’s comment #511 DOI-190 on the 60% BOD Report, “It should be noted that additional CHPMP measures may be identified during ongoing consultation meetings with the Tribes, and the CHPMP will be modified accordingly.”

- **Volume 5 (Project Health and Safety Plan)** presents the Project HSP which provides a framework for safe operation and maintenance of the remedy and includes procedures that will apply to PG&E employees who may operate and maintain the remedy. Any contractor who may be involved in the operation and maintenance of the remedy will be required to prepare its own site-specific HSP in conformance with this Project HSP that addresses their specific scope of work. Contractor personnel will be required to sign a form acknowledging that they understand and will fully comply with their own HSP.

SECTION L2

Project Management, Communication Framework, and Workers Training

As required by the 1996 CACA and 2013 CD (DTSC 1996; DOI 2013), this section describes the management approach for this project, including levels of authority and responsibility, lines of communication, and qualifications of key personnel who will operate and maintain the remedy. In addition, this section also describes training for O&M personnel and presents a framework for communication during the O&M phase of the project.

L2.1 Project Management

PG&E is committed to implementing the remedial action in an effective manner that is safe, sustainable, and respectful to the sacredness and sensitivity of the cultural, historical, and biological resources at or near the Topock site, while complying fully with all regulatory mandates. Pursuant to DTSC's direction, PG&E will comply with the California Business and Professions Code during the implementation of the groundwater remedy.

PG&E has chartered an implementation team with the accountability to ensure that the above commitment is fulfilled. Exhibit L2.1-1 presents the overall PG&E Topock Groundwater Remedy Implementation Project Team organization chart. This project organization is intended to be a "living" element throughout the remedy implementation, meaning that it can be updated as new information becomes available as the project proceeds or as site circumstances change.

Exhibit L2.1-2 summarizes the qualifications and project roles of key personnel, as well as their levels of authority and responsibility and lines of communication. At the time of the preparation of this O&M Manual, contractor(s) for the construction and O&M of the groundwater remedy have not been identified.

L2.2 Summary of Communication Procedures and Protocols

This section presents a summary of communication procedures and protocols to be used during the operation and maintenance of the project, and is intended to be used by PG&E to inform, seek inputs, seek approval (from agencies), resolve issues, and/or comply with requirements. This summary is a compilation of the communication procedures and protocols specified in various project directives and agreements (e.g., the CACA, CD, EIR mitigation measures, PA, Programmatic Biological Assessment (PBA), CHPMP, CIMP, HMBP, and Section 1600 Avoidance and Minimization Measures) and relevant state and federal requirements (e.g., those related to reporting of releases of fuels or hazardous materials). This communication framework is intended to be a dynamic "living" element throughout the remedy implementation, meaning that it can be updated as new information becomes available as the project proceeds or as site circumstances change.

In general, project communications occurs in two forms -- routine (regular periodic communication) and non-routine (communication when the project experiences unexpected changes during O&M). Communication could be spoken, written, or both. Examples of routine communication include quarterly Consultative Working Group (CWG) meetings and quarterly progress reports. Examples of non-routine communication include notification of a pipeline leak or unplanned system shutdown. Exhibit L2.2-1 identifies triggering events, party or parties initiating communication, party or parties receiving communication, and general communication protocols and procedures.

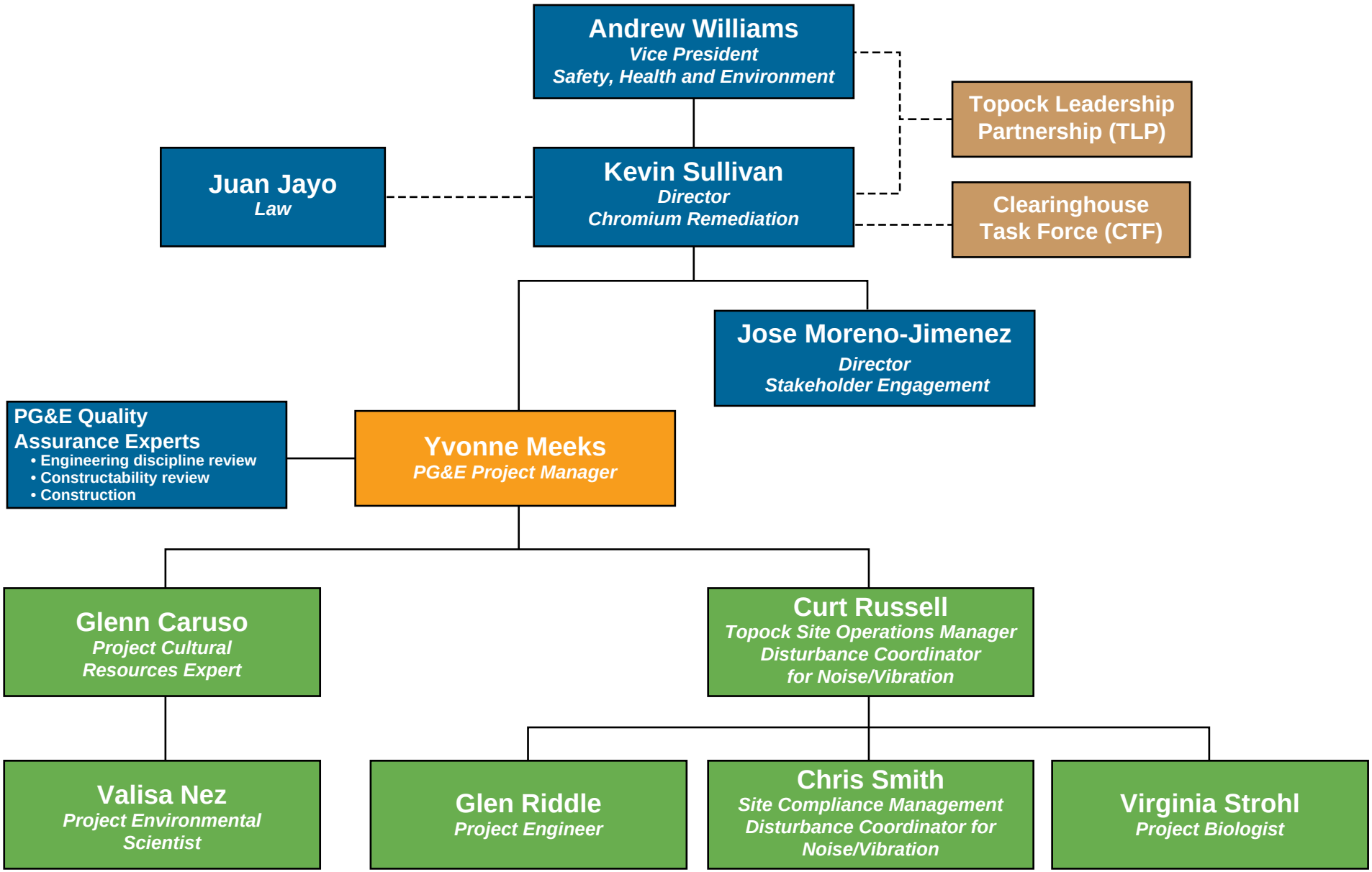

EXHIBIT L2.1-1
Project Team Organization Chart
Groundwater Remedy Operation and Maintenance Manual
PG&E Topock Compressor Station, Needles, California

EXHIBIT L2.1-2
Key Project Personnel, Qualifications, Levels of Authority and Responsibility, and Lines of Communication
Groundwater Remedy Operation and Maintenance Manual
PG&E Topock Compressor Station, Needles, California

Key Personnel	Project Role, Summary of Qualifications, and Lines of Communication
Andrew Williams	**PG&E Vice President Safety, Health, and Environmental** Mr. Williams is the executive sponsor of the project and represents PG&E at the executive level on the Topock Leadership Partnership (TLP). Mr. Williams has served in this role since 2014.
Kevin Sullivan	**PG&E Director of Chromium Remediation** Mr. Sullivan reports to Mr. Williams; he has the overall responsibility for the project direction and implementation, and represents PG&E at the executive level on the Clearinghouse Task Force (CTF). Mr. Sullivan has served in this role since June 2014.
Jose Moreno-Jimenez	**PG&E Director of Stakeholder Engagement** Mr. Jimenez has the overall responsibility for community relations, outreach programs, and stakeholder engagement. Mr. Jimenez has served in this role since 2015.
Juan Jayo	**Legal** Mr. Jayo has the overall responsibility for the legal aspects of the project and reports to the General Counsel of PG&E. Mr. Jayo has served in this role since 2005.
Yvonne Meeks	**PG&E Project Manager** Ms. Meeks reports to Mr. Sullivan; she is responsible for the technical direction and the day-to-day execution of the project. Ms. Meeks has served in this role since 2004.
Curt Russell	**PG&E Topock Site Operations Manager** Mr. Russell reports to Ms. Meeks; he is responsible for all aspects of Topock site/local operations related to the project. Mr. Russell has served in this role since 2005. For the groundwater remedy implementation, Mr. Russell is also a designated disturbance coordinator for noise/vibration.
Glenn Caruso	**PG&E Project Cultural Resources Expert** Mr. Caruso reports to Ms. Meeks; he is the project liaison for issues related to cultural resources and historic properties. Mr. Caruso has served in this role since 2004.
Virginia Strohl	**PG&E Project Biologist** Ms. Strohl reports to Mr. Russell; she is the project liaison for issues related to biological resources. Ms. Strohl has served in this role since June 2012.
Chris Smith	**PG&E Site Compliance Management** Mr. Smith reports to Mr. Russell; he is responsible for the overall site compliance management activities. Mr. Smith has served in this role since 2005. For the groundwater remedy implementation, Mr. Smith is also a designated disturbance coordinator for noise/ vibration.
Glen Riddle	**Project Engineer** Mr. Riddle reports to Mr. Russell; he is responsible for engineering design activities. Mr. Riddle has served in this role since 2012.
Valisa Nez	**Project Environmental Scientist** Ms. Nez reports to Mr. Caruso; she is the project liaison for issues related to regulatory compliance. Ms. Nez has served in this role since January 2013.
PG&E In-House Quality Assurance Team	**PG&E in-house subject matter experts** report to Ms. Meeks and will perform review/quality assurance of the remedial design documents prepared by the remedial design contractors. The engineering discipline reviewers will include, but not be limited to, structural, geotechnical, electrical, and instrumentation and controls.

EXHIBIT L2.2-1
Communication Framework During Operation and Maintenance
Groundwater Remedy Operation and Maintenance Manual
PG&E Topock Compressor Station, Needles, California

Type	Triggering Event	Required By[1]	Party Initiating Communication	Party Receiving Communication[2]	General Communication Procedures/Protocols
Routine Communication	Notification of planned O&M/field activities (including sampling activities and planned downtime)	Cultural Impact Mitigation Program (CIMP) and EIR MMRP measures CUL-1a-8a, CUL-1a-8j, CUL-1a-8l, CUL-1a-8h EIR MMRP measures NOISE-1b, 2d, and 3b Consent Decree (CD) #24 Corrective Action Consent Agreement (CACA) X(3) Programmatic Agreement (PA) Appendix C Monitoring Protocol Section 1600 Avoidance and Minimization Measure (AMM) #34	PG&E Topock Site Operations Manager or designee	DTSC, DOI, HNWR, Tribes, CDFW, BLM Project stakeholders	Notify agencies and Tribes monthly of scheduled project-related field activities. For Tribal monitoring/observation of ground-disturbing activities, notify Tribes as early as possible, but at least three business days in advance of the initiation of the identified project work, whenever possible per the PA's Monitoring Protocol and not less than one week in advance of the initiation of planned activities (CUL-1a-8l/CIMP § 2.12). When activity is imminent and advance notification was not possible, PG&E will place telephone calls to key Tribal representatives (CUL-1a-8j/CIMP § 2.10). Notify DOI 28 days in advance of sample collection activities, unless shorter notice is agreed to by DOI (CD ¶24). Notify DTSC at least 7 days in advance of sample collection activities (CACA X[3]). In the event short-order sampling/field activity needs occur, PG&E will call DTSC and DOI (prior to proceeding with the activity) and then follow up by email. In the event that email or voice mail is not available to PG&E, a text message will be sent to DTSC and DOI prior to proceeding with the activity and then a follow-up by email. Notify CDFW at least 5 days prior to initiation of construction (project) activities and at least 5 days prior to completion of construction (project) activities (Section 1600 AMM #34). See also CIMP § 2.8.5 for details related to, depend on activities, notifications to nearby vibration-sensitive and noise-sensitive receptors.
	Progress reporting	CACA Attachments 6 and 7 CD ¶32; CD, Appendix C, Section 5	PG&E Project Manager (PM) or designee	DTSC, DOI	Quarterly during O&M; Exhibit L2.2-2 presents a template for the Quarterly O&M Progress Reports.
	EIR mitigation measure compliance reporting	EIR MMRP measures CUL-1a-8a, CUL-1a-2, CUL-1a-3b, CUL-1a-11	PG&E PM or designee	DTSC	Quarterly reports via email during design and construction/start-up, and annually during O&M.
	Tribal outreach activities	2006 Settlement Agreement between PG&E and FMIT (Section VIII[A]); PG&E Memoranda of Agreement with various Tribes EIR mitigation measure CUL-1a-8a	PG&E PM or designee	Tribes, Agencies	Frequent communications with Tribes to address current issues and provide a forecast of upcoming activities (CUL-1a-8a). Additional communications will depend on purpose of the communication and type of info to be exchanged.
Non-Routine Communication *(Remedy O&M)*	**Request for Variance/Notification of Changes**				
	Material deviation[5] from Work Plans, Mitigation Monitoring and Reporting Program (MMRP), action-specific and location-specific ARARs, design documents, etc.	This O&M Manual	PG&E PM, PG&E Topock Site Operations Manager, or designee	DTSC, DOI, Interested Tribes FMIT (for material deviation on FMIT property)	Notify the agencies orally within 3 days of when PG&E first knew of potential material deviations. Submit a variance request form to agencies for approval 5 calendar days before the anticipated work occurs. Agencies will act on the request or notify PG&E that more time is required. Exhibit L2.2-3 presents a template for a Work Variance Request Form. Report the material deviations in quarterly progress reports. Notify FMIT that a Work Variance Request has been submitted to the agencies for a material deviation on FMIT property.
	Discovery of event that occurs or has occurred that causes delay in the performance of any obligation under the CD for which PG&E intends to assert a claim of force majeure	CD ¶61	PG&E PM or designee	DOI	Orally within 3 working days of when PG&E first knew the event might cause a delay and written notification within 7 days thereafter.
	Discovery of changes to the schedule described in the progress reports (i.e., change in schedule described in the quarterly progress reports for the performance of any activity including, but not limited to data collection and implementation of work plans)	CD ¶33 CACA	PG&E PM, PG&E Topock Site Operations Manager, or designee	DOI, DTSC	No later than 7 days prior to the performance of the activities, or as otherwise agreed to by DOI and PG&E.

EXHIBIT L2.2-1
Communication Framework During Operation and Maintenance
Groundwater Remedy Operation and Maintenance Manual
PG&E Topock Compressor Station, Needles, California

Type	Triggering Event	Required By[1]	Party Initiating Communication	Party Receiving Communication[2]	General Communication Procedures/Protocols
	Changes in chemical use in remedy operation	Resolution to 60% design comment (RTCs #13a, 13b, 854, 863, 868)	PG&E PM or designee	FMIT	Notify Tribe and discuss if requested. PG&E will proceed with making changes as necessary to minimize disruption to operations.
	Confirmation of parameter exceedance of Action Level	This O&M Manual, specifically the Sampling and Monitoring Plan (O&M Volume 2)	PG&E PM or designee	DTSC, DOI	See Sampling and Monitoring Plan - Figures 2.2-11 (Protocol for Notification of Confirmed Exceedance of Action Levels) and 5.1-7 (COPC Perimeter Assessment Plan).
	Confirmation of arsenic exceedance in groundwater due to freshwater injection	This O&M Manual, specifically the Sampling and Monitoring Plan (O&M Volume 2)	PG&E PM or designee	DTSC, DOI	See Sampling and Monitoring Plan – Figure 2.2-9 (Freshwater Injection System Decision Rules/ Operational Framework).
	Water temperature from freshwater supply well increases significantly	Resolution to 90% design comment (RTC #31)	PG&E PM or designee	Hualapai Tribe	Notify the Hualapai Tribe and discuss if requested.
	Notification when Contingency Triggers				
	Major breakdown and/or complete failure of the remedy, includes emergency situations such as fires, incidents that result in hospitalization or death, acts of god (e.g., earthquake, flood), etc.	CACA Attachment 6, Item (B)(11)(c) CD ¶52 Programmatic Biological Assessment [PBA] #19 and #22	PG&E PM, PG&E Topock Site Operations Manager, or designee	DTSC, DOI, Affected Land Owners/Managers (FMIT, BOR, BLM, HNWR/ USFWS) If there is a potential threat to the river, notify MWD and immediate downstream users such as the Chemehuevi Indian Tribe as soon as possible. Notify the Chemehuevi Indian Tribe orally within 12 hours followed by a written report within 5 days, and a follow-up (verbal or written) within 15 days.	Call 911 if there is an impact to human health that requires immediate medical attention by emergency response/health care professionals. Within 48 hrs to BLM (PBA #19 and #22). Immediate notification to DOI's Project Manager, or, if the Project Manager is unavailable, DOI's Alternate Project Manager, then to the responsible bureau for emergency and release events. To comply with this specific CD requirement, PG&E interprets immediate to be "within 24 hours". Within 24 hrs to DTSC orally; within 72 hrs in writing; include in next progress report. Additional notifications may be required (e.g., spills).
	Releases[3] of EPCRA-listed extremely hazardous substances and CERCLA-listed hazardous substances to the environment that are subject to reporting under EPCRA Section 304.	CACA IV(A)(3) CD ¶34 and ¶35 PBA #19 and #22 Project-specific Hazardous Material Business Plan (HMBP) CERCLA Section 103(a)	PG&E Topock Site Operations Manager, or designee	NRC, OES, CUPA, DTSC, DOI, Affected Land Owners/ Managers (FMIT, BOR, BLM, HNWR/ USFWS) If there is a potential threat to the river, notify MWD and immediate downstream users such as the Chemehuevi Indian Tribe as soon as possible. Notify the Chemehuevi Indian Tribe orally within 12 hours followed by a written report within 5 days, and a follow-up (verbal or written) within 15 days.	Call 911 if there is an impact to human health that requires immediate medical attention by emergency response/health care professionals. Within 15 minutes verbally to the NRC, OES, and the CUPA. Written follow-up report to OES and CUPA within 30 days. Within 24 hrs to DOI PM or if DOI PM is not available, DOI's Alternate Project Manager, then to the responsible bureau for emergency and release events. Written reports to DOI within 30 days of onset of event and again, within 45 days after conclusion of event (latter report detailing actions taken in response). Within 48 hrs to BLM (PBA #19 and #22). Within 48 hrs orally and within 10 days in writing to DTSC; include incident in next progress report.
	Releases[3] of CERCLA-listed hazardous substances to the environment that are reportable under CERCLA Section 103.	CACA IV(A)(3) CD ¶34 and ¶35 PBA #19 and #22 HMBP CERCLA Section 103(a)	PG&E PM, PG&E Topock Site Operations Manager, or designee	NRC, OES, CUPA, DTSC, DOI, Affected Land Owners/ Managers (FMIT, BOR, BLM, HNWR/ USFWS) If there is a potential threat to the river, notify MWD and immediate downstream users such as the Chemehuevi Indian Tribe as soon as possible. Notify the Chemehuevi Indian Tribe orally within 12 hours followed by a written report within 5 days, and a follow-up (verbal or written) within 15 days.	Call 911 if there is an impact to human health that requires immediate medical attention by emergency response/health care professionals. Within 15 minutes verbally to the NRC, OES, and the CUPA. Written follow-up report to OES and CUPA within 30 days. Within 24 hrs to DOI PM or if DOI PM is not available, DOI's Alternate Project Manager, then to the responsible bureau for emergency and release events. Written reports to DOI within 30 days of onset of event and again, within 45 days after conclusion of event (latter report detailing actions taken in response). Within 48 hrs to BLM (PBA #19 and #22). Within 48 hrs orally and within 10 days in writing to DTSC; include incident in next progress report.

EXHIBIT L2.2-1
Communication Framework During Operation and Maintenance
Groundwater Remedy Operation and Maintenance Manual
PG&E Topock Compressor Station, Needles, California

Type	Triggering Event	Required By[1]	Party Initiating Communication	Party Receiving Communication[2]	General Communication Procedures/Protocols
	Releases[3] of hazardous materials to the environment reportable under CHSC Section 25501 and 19 CCR 2703	CACA IV(A)(3) HMBP PBA #19 and #22 CHSC Section 25501, 19 CCR 2703	PG&E PM, PG&E Topock Site Operations Manager, or designee	NRC if over reportable quantity, OES, CUPA, DTSC, DOI, Affected Land Owners/ Managers (FMIT, BOR, BLM, HNWR/ USFWS) If there is a potential threat to the river, notify MWD and immediate downstream users such as the Chemehuevi Indian Tribe as soon as possible. Notify the Chemehuevi Indian Tribe orally within 12 hours followed by a written report within 5 days, and a follow-up (verbal or written) within 15 days.	Call 911 if there is an impact to human health that requires immediate medical attention by emergency response/health care professionals. Immediate verbal report to OES and CUPA. Written follow-up report within 30 days. Include incident in next progress report. Within 48 hrs to BLM (PBA #19 and #22). Within 48 hrs orally and within 10 days in writing to DTSC; include incident in next progress report. Follow this order of communication to the federal agencies: DOI PM or if DOI PM is not available, DOI's Alternate Project Manager, then to the responsible bureau for emergency and release events
	Release of oil to navigable waters of the US or adjacent shorelines in quantity that causes a sheen on the water or a violation of applicable water quality standards. Release of any quantity of oil to waters of the State, or release of 1 barrel (42 gallons) or more to a location on land where it could potentially enter waters of the State.	33 USC 1321 CWC Section 13272 Calif. State Oil Spill Contingency Plan Fuel SOP (EIR MMRP measure HAZ-1b)	PG&E PM, PG&E Topock Site Operations Manager, or designee	NRC (for spills to waters of the US), OES, DTSC, DOI, Affected Land Owners/ Managers (FMIT, BOR, BLM, HNWR/ USFWS), If there is a potential threat to the river, notify MWD and immediate downstream users such as the Chemehuevi Indian Tribe as soon as possible. Notify the Chemehuevi Indian Tribe orally within 12 hours followed by a written report within 5 days, and a follow-up (verbal or written) within 15 days.	Within 15 minutes to NRC and OES. Follow this order of communication to the federal agencies: DOI PM or if DOI PM is not available, DOI's Alternate Project Manager, then to the responsible bureau for emergency and release events
	Release of hazardous waste or hazardous waste constituents that could threaten human health or the environment outside the facility.	CACA IV(A)(3) and Attachment 6, Item B(11)(c) CD ¶52 HMBP PBA #19 and #22 22 CCR 66265.56	PG&E PM, PG&E Topock Site Operations Manager, or designee	OES, DTSC, DOI, Affected Land Owners/ Managers (FMIT, BOR, BLM, HNWR/ USFWS), If there is a potential threat to the river, notify MWD and immediate downstream users such as the Chemehuevi Indian Tribe as soon as possible. Notify the Chemehuevi Indian Tribe orally within 12 hours followed by a written report within 5 days, and a follow-up (verbal or written) within 15 days.	Immediate verbal report to OES. Written follow-up report within 15 days to DTSC. Within 48 hrs to BLM (PBA #19 and #22). Within 24 hrs orally; within 72 hrs in writing to DTSC; include incident in next progress report. Follow this order of communication to the federal agencies: DOI PM or if DOI PM is not available, DOI's Alternate Project Manager, then to the responsible bureau for emergency and release events
	Release of DOT-regulated hazardous material during transportation[4] that is reportable under 49 CFR 171.15(b)	49 CFR 171.15 CD ¶52 CACA	PG&E PM, PG&E Topock Site Operations Manager, or designee	NRC, DOI, DTSC Affected Land Owners/ Managers (FMIT, BOR, BLM, HNWR/USFWS If there is a potential threat to the river, notify MWD and immediate downstream users such as the Chemehuevi Indian Tribe as soon as possible. Notify the Chemehuevi Indian Tribe orally within 12 hours followed by a written report within 5 days, and a follow-up (verbal or written) within 15 days.	Call 911 if there is an impact to human health that requires immediate medical attention by emergency response/health care professionals. Immediate verbal report to NRC. Written follow-up report within 30 days. Follow this order of communication to the federal agencies: DOI PM or if DOI PM is not available, DOI's Alternate Project Manager, then to the responsible bureau for emergency and release events

EXHIBIT L2.2-1
Communication Framework During Operation and Maintenance
Groundwater Remedy Operation and Maintenance Manual
PG&E Topock Compressor Station, Needles, California

Type	Triggering Event	Required By[1]	Party Initiating Communication	Party Receiving Communication[2]	General Communication Procedures/Protocols
	Discovery of human-caused disturbance/human remains or burials/previously unidentified potentially significant cultural, historic, or paleontological resources/dead or injured listed species				
	Discovery of human-caused disturbance to remedy facilities	EIR MMRP measure CUL-1a-3b Site Security Plan	PG&E Topock Site Operations Manager, PG&E Remediation Resources Specialist or designee	DTSC, DOI, Landowners involved in the incursion (BLM, USFWS, or FMIT)	Notification protocols per Site Security Plan; summarized in quarterly compliance report. Additional notifications may be required (e.g., spills).
	Discovery of human remains or burials	EIR MMRP measure CUL-4 PA Section IX CHPMP (Section 8.2 and Appendix D, Plan of Action)	PG&E Topock Site Operations Manager, PG&E Cultural Resources Expert, Qualified Cultural Resources Consultant, or designee	PG&E's initial communication is to the San Bernardino County Coroner, and PG&E's and DTSC's project managers. The qualified cultural resources consultant shall coordinate the interaction between Tribes, PG&E, the County, and DTSC to determine proper treatment and disposition of any remains. Human remains found on federal land would require notification of BLM. BLM will then notify the Advisory Council on Historic Preservation, California and Arizona State Historic Preservation Officers, BOR, USFWS, DTSC, relevant County Coroner, and Interested Tribes, The County Coroner will contact the Native American Heritage Commission (NAHC) if it determines the remains are Native American and not related to a crime.	Suspend work in the immediate vicinity of the discovery (not less than 5 meters and not to exceed 50 meters from the discovered remains), and if the discovery is on federal land, notify BLM as soon as possible, but no later than 24 hours of the discovery by telephone, followed by written confirmation within three business days. If the remains are found in California, BLM will notify the County Coroner. If the discovery is on non-federal/non-Tribal lands in Arizona, then BLM in consultation with PG&E will report the discovery to the Arizona State Museum. If the discovery is on non-federal/non-Tribal lands in California, then PG&E will notify the County Coroner. Additional notifications and communications are described in the CHPMP, Appendix D, Plan of Action.
	Discovery of previously unidentified potentially significant cultural, historical, and/or paleontogical resources	PBA #29 EIR MMRP measure CUL-1b/c-4 PA Section IX CHPMP (Section 8.1 and Appendix C Discovery Plan) CIMP (CUL-1a-8b/o)	PG&E Topock Site Operations Manager, PG&E Cultural Resources Expert, Qualified Cultural Resources Consultant, or designee	PG&E's initial communication is to BLM and the Tribes, if the resource is Native American in nature. BLM will then notify DOI, the Advisory Council on Historic Preservation, California and Arizona State Historic Preservation Officers, BOR, USFWS, the Tribes (if not already notified) and DTSC.	Suspend work in the immediate vicinity of the discovery (not less than 5 meters and not to exceed 50 meters from the discovered remains), notify BLM and the Tribes, if the resource is Native American in nature, immediately. Qualified archaeologists will inspect and evaluate any new sites that may be discovered during construction and will notify Tribal Monitors of the discovery. Tribal Monitors will then inspect and evaluate the new site(s) (CIMP, Subsections 2.2 and 2.15, EIR MMRP measures CUL-1a-8b and 8o).
	Locate dead or injured listed species	PBA #28	PG&E Topock Site Operations Manager, PG&E Project Biologist or designee	BLM, USFWS	Notify Agencies within 3 working days of its finding.

Notes:
[1] EIR MMRP = Environmental Impact Report Mitigation Measures Reporting Program (DTSC 2011b), PA = Programmatic Agreement (BLM 2010), CD = Consent Decree (DOI 2013), PBA = Programmatic Biological Assessment (CH2M HILL 2014), CHPMP = Cultural and Historic Properties Management Plan (BLM 2012), CACA = Corrective Action Consent Agreement (DTSC 1996), HMBP = Hazardous Materials Business Plan (see Appendix F of the O&M Plan [Volume 1 of this O&M Manual]), AMM = Avoidance and Minimization Measures, CIMP = Cultural Impact Mitigation Program (PG&E 2015).
[2] Agencies: ADEQ = Arizona Department of Environmental Quality; BLM = U.S. Bureau of Land Management; BOR = U.S. Bureau of Reclamation; CDFW = California Department of Fish and Wildlife; CUPA = California Unified Permitting Agency; DOI = U.S. Department of the Interior; DTSC = California Department of Toxic Substances Control; HNWR = Havasu National Wildlife Refuge; MWD = Metropolitan Water District; NRC = National Response Center; OES = California Governor's Office of Emergency Services; RWQCB = Regional Water Quality Control Board; USFWS = U.S. Fish and Wildlife Service.
[3] Excludes permitted discharge of materials and release of hazardous materials/waste into secondary containment areas that is not released to the environment
[4] Transportation includes loading, offloading, and storage of DOT-regulated vehicle/trailer. Notify the NRC in the event of a transportation incident involving death, hospitalization, damage greater than $50,000, roadway shutdown or public evacuation exceeding 1 hour, fire, breakage or spillage.
[5] This notification excludes changes that are considered process improvements and system optimization which are anticipated over decades-long operation. The need for and the timing/frequency of updating this O&M Manual will be discussed with the agencies as remedy start-up and operation progresses. Operations staff will have the latest SOPs on file at the site.

PG&E Topock Compressor Station Groundwater Remediation Project Quarterly Progress Report for Remedy Operation and Maintenance [Indicate Reporting Period]

Table of Contents

1. Introduction

PG&E is implementing the groundwater remedy to address chromium in groundwater at Solid Waste Management Unit (SWMU) 1/Area of Concern (AOC) 1 and AOC 10 near the Topock Compressor Station, in conformance with the requirements of the Resource Conservation and Recovery Act (RCRA) Corrective Action and the Comprehensive Environmental Response, Compensation, and Liability Act (CERCLA). The groundwater remedy includes:

- Construction of an In-situ Reactive Zone (IRZ) along National Trails Highway (NTH) using a line of wells that may be used as both injection and extraction wells to circulate groundwater and distribute an organic carbon source to promote reduction of the Cr(VI) to Cr(III).
- Flushing accomplished through a combination of fresh water injection and injection of carbon-amended water in wells upgradient of the plume.
- Extraction wells near the Colorado River to provide hydraulic capture of the plume, clean up the floodplain downgradient of the NTH IRZ, and enhance the flow of contaminated groundwater through the IRZ line.
- East Ravine Extraction Wells in the eastern (downgradient) end of the East Ravine to provide hydraulic capture of contaminated groundwater in bedrock; and Transwestern Bench Extraction Wells in the area northeast of the TCS to accelerate capture of Cr(VI) impacted groundwater from the alluvial deposits located downgradient of the TCS.
- Institutional controls to restrict surface land uses and prevent the use of groundwater.
- Monitored natural attenuation (MNA) as a long-term component to address residual Cr(VI) that may remain in recalcitrant portions of the aquifer after enhanced in-situ treatment.

The Remedial Action Objectives (RAOs) for the groundwater remedy are to:

1. Prevent ingestion of groundwater as a potable water source having Cr(VI) in excess of the regional background concentration of 32 micrograms per liter (µg/L).
2. Prevent or minimize migration of total chromium (Cr[T]) and Cr(VI) in groundwater to ensure concentrations in surface water do not exceed water quality standards that support the designated beneficial uses of the Colorado River (11 µg/L Cr[VI]).
3. Reduce the mass of Cr(T) and Cr(VI) in groundwater at the site to achieve compliance with ARARs in groundwater. This RAO will be achieved through the cleanup goal of the regional background concentration of 32 µg/L of Cr(VI).
4. Ensure that the geographic location of the target remediation area does not permanently expand following completion of the remedial action.

The completion criteria or performance standards for the groundwater remedy is mainly driven by RAO #3, reducing Cr(VI) concentrations throughout the plume to concentrations of 32 µg/L or less. Attainment of the completion criteria or achievement of performance standards, Cr(VI) concentrations of 32 µg/L or less, is intended to be applied throughout the area of contaminated groundwater. In establishing this criterion, the following are recognized:

- Attaining the cleanup criteria of 32 µg/L Cr(VI) in groundwater may be through active remediation or through MNA after active remediation has been employed and optimized.
- Different areas of the plume may reach the cleanup criteria of 32 µg/L Cr(VI) in groundwater at different times.

In compliance with the 1996 CACA (Attachment 6, Part B, Section 12 and Attachment 7) and the 2013 RD/RA CD, Appendix C Section 5, this quarterly report describes activities taken to implement the Corrective Measure/Remedial

EXHIBIT L2.2-2
Quarterly Progress Report Template
Groundwater Remedy Operation and Maintenance Manual
PG&E Topock Compressor Station, Needles, California

Action since last, reporting period and activities planned for the next reporting period, presents available results from sampling and testing since last reporting period, summarizes progress towards attaining the RAOs, any issues encountered/deviations from design documents, O&M Manual, and Construction/Remedial Action Work Plan, and any optimizations and enhancements. In addition, this report discusses personnel changes and summarizes activities performed and activities planned in support of the DTSC's Community Outreach Plan, DOI's Community Involvement Plan, and any contacts with local community, representatives of the press, and stakeholders/Tribes.

2. Operations Summary

Describe routine and non-routine system downtime, operational data (listed below) and process monitoring data (listed below) (including percentage of time treatment systems were operational on a monthly basis, quantity of water recovered for treatment/recirculated for in-situ remedy, as well as cumulative total, quantity of ethanol injected, etc.), utilities and consumables used and waste handling/disposal, any issues encountered with system operation, any personnel changes, any system optimizations and maintenance that were performed, and any material deviations from design documents, O&M Manual, and Construction/ Remedial Action Work Plan.

- *In-situ remediation - volume of water recirculated, volume of ethanol (or other carbon substrate) injected, volume of well rehabilitation chemicals used, carbon amendment system monitoring data (as needed)*
- *Freshwater supply – volume of water extracted and injected, percentage of time the extraction pumps were operating on a monthly basis*
- *Remedy-produced water management – volume of water managed through the conditioning process, percentage of time the conditioning system was operational on a monthly basis*

3. Performance Summary

Describe monitoring events and sampling performed during the current reporting period, the sampling results and interpretation of results (including volume of water collected and treated, Cr(VI) mass treated, influent-effluent data, etc., where applicable), an evaluation of the hydraulic control of the plume, an interpretation of progress toward RAOs, and any material deviations from design documents, O&M Manual, and Construction/Remedial Action Work Plan (e.g., gaps or inconsistencies in the site conceptual model)

- *In-situ remediation*
- *Freshwater supply*
- *Remedy-produced water management*
- *Material changes to the model including updates and recalibrations will be noted in the corresponding quarterly report, and presented in detail in the annual report.*

4. Green Remediation Evaluation Matrix (GREM) Summary

Summarize the O&M GREM and any changes since last reporting period.

5. Summary of Activities in Support of the Community Relations Plan and Contacts with the Press, Local Community, and Stakeholders/Tribes

Summarize activities performed in support of DTSC's Community Outreach Plan, DOI's Community Involvement Plan, and contacts with local community, representatives of the press, and stakeholders/Tribes, if any.

6. Recommendations

Provide suggestions for system optimizations or procedural enhancements, as applicable, to improve performance, reduce costs, reduce wastes, etc. Optimizations and/or enhancements could be based on system inefficiencies, technological developments, modified regulations, etc. If applicable, discuss whether or not recommendations from the previous quarter were adopted and if not, why not.

7. Planned Activities for Next Reporting Period

Provide planned activities of the next reporting period (O&M activities, groundwater/surface monitoring events, activities in support of the Community Relations Plan, etc.).

8. References

EXHIBIT L2.2-2 (Continued)
Quarterly Progress Report Template
Groundwater Remedy Operation and Maintenance Manual
PG&E Topock Compressor Station, Needles, California

PG&E TOPOCK GROUNDWATER REMEDIATION PROJECT
WORK VARIANCE REQUEST FORM

Request Prepared By: Request Approval From:

Date Submitted: Date Approval Required:

Variance Request No.: Map Area:

Location:

Landowner: Landowner Parcel Number(s):

Current Vegetative Cover/Land Use:

Existing Sensitive Resource? ☐ No ☐ Yes Specify:

Variance From: ☐ Mitigation Measure ☐ Work Plan/Procedure ☐ Response to Comments
☐ Drawing ☐ Permit Condition ☐ Other

Detailed Description of Variance and Justification (Attach additional information if necessary):

Attachments: ☐ Photo ☐ Construction Drawing ☐ Aerial Photo Mark-Up ☐ Correspondence ☐ Other

Potential Impacts of Variance:

☐ Air Quality	☐ Hazardous Materials	☐ Aesthetic
☐ Biological Resources	☐ Noise	☐ Water Resources
☐ Geology and Soils	☐ Paleo Resources	
☐ Cultural Resources	☐ Hydrology and Water Quality	

Description and Justification:

Approval Signatures:

_____
PG&E Site Operations Manager or Designee

_____
QA Manager or Designee

_____
Approving Agency

EXHIBIT L2.2-3
Work Variance Request Form
Groundwater Remedy Operation and Maintenance Manual
PG&E Topock Compressor Station, Needles, California

L2.3 Workers Training

PG&E is committed to implementing the remedial action in a manner that is respectful of the sacredness and sensitivity of the resources at and near the project area. To that end, PG&E and its contractors will fully comply with the mitigation measures set forth to minimize impacts to the sensitive resources as well as protocols and/or provisions that are in the Cultural Historic Properties Management Plan (BLM 2012) and in the CIMP. Consistent with its obligations under the Programmatic Agreement's Monitoring Protocol, existing PG&E standard practice, and the EIR MMRP requirements, cultural sensitivity training is required of all staff, workers, and contractors engaged in activities within the Area of Potential Effect (APE) and the EIR Project Area to familiarize them with the sacred nature and cultural significance of the area so that they will perform their jobs in a respectful manner. This training includes discussion of appropriate behavior, activities that are to be avoided and consequences for noncompliance. Consistent with these obligations, PG&E will not tolerate any disrespectful behavior in the field and will remove any staff, workers, or contractors who do not comply with this section. In addition, all workers will be required to comply with the training requirements specified in the overall Project HSP (see Volume 5 of the O&M Manual) and their own site-specific HSP specific to their operations on the project.

Cultural and Historical Resources

Cultural and historical resources sensitivity education has been a central part of the Topock remediation project to date. The existing education on cultural/historical resources sensitivity for Topock occurs via periodic training and project initiation meetings. Sensitivity training classes are conducted at least annually, and are attended by all workers available to participate. Sensitivity training/education is also provided at project initiation meetings, typically held at the site and prior to field work. Site orientation will stress that all site activities will be conducted in a respectful manner. Sensitivity training will be provided by PG&E Site Operations Manager, PG&E Remediation Resources Specialist, and PG&E will invite participation from the Tribes, archaeological monitors, and agency staff, as appropriate.

Several EIR mitigation measures associated with the groundwater remedy (e.g., CUL-1a-13, CUL-1b/c-4, CUL-4) are related to continued training of workers regarding cultural resources, historical resources, and the identification of human remains. In compliance with CUL-1a-13, PG&E has prepared, in coordination with agencies and Tribes, educational materials used in Orientation sessions for the Topock project. In addition, PG&E has prepared a cultural sensitivity education program to educate workers (included as an appendix to the Construction/Remedial Action Work Plan). Implementation of this program is underway.

With regard to CUL-1b/c-4, consistent with CUL-1a-3, PG&E has retained Applied Earthworks, Inc. (AE), a consulting firm with qualified cultural resources consultants, to observe ground-disturbing activities and provide training to workers as required. For implementation of CUL-4, qualified cultural resources consultant(s) and designated Tribal monitor(s) will train construction personnel in the identification of human remains and potential burial goods so they may aid in their identification (see guidance for implementing CUL-4 in an appendix to the Construction/Remedial Action Work Plan).

Biological Resources

As with cultural and historical resources, biological resources sensitivity education has also been a central part of the Topock project. PG&E's education program covering threatened and endangered species and the general project management measures specified under the PBA is provided at project initiation meetings, typically held at the site and prior to field work. The training is provided by the PG&E Topock Site Operations Manager, the PG&E Project Biologist, and supporting contract biologists. New employees will receive the training prior to working onsite.

In accordance with the PBA, a PG&E-designated Field Contact Representative (FCR) will be responsible for overseeing compliance with the mitigation measures. The FCR has the authority to halt activities that pose a danger to listed species and/or are in violation with the mitigation measures. A qualified biologist will conduct a preconstruction survey immediately prior to initiation of ground disturbing activities. Within 60 days of completion of construction activities, the FCR and the qualified biologist will prepare a report for submittal to BLM.

SECTION L3

Data Management, Documentation, and Reporting

This section describes the overall management and documentation of data anticipated to be collected during remedy operation, and the reporting of those data. Also discussed are the record-keeping and maintenance of the data. Details on methodology for data collection and evaluation of remedy performance are discussed in Section 4 of Volume 2 (Sampling and Monitoring Plan).

L3.1 Data Management

Three types of data are expected to be collected during implementation of the remedy: field measurement/ process monitoring data, onsite laboratory data, and offsite laboratory data. The management of each type of data is described below. Exhibit L3.1-1 presents a simplified data management process for the project.

Field Measurement/Process Monitoring Data

Field measurements will be collected from the monitoring and remediation well network, the carbon amendment facilities, the remedy-produced water conditioning plant, and the freshwater pre-injection treatment system. Measurements will be conducted in accordance with the SOPs (as described in Section 7.1 of the Sampling and Monitoring Plan [O&M Manual Volume 2] and included in Appendix A of Volume 2), and are recorded manually in a field logbook, field sampling form, tablet computer, and/or process monitoring checklist, or recorded automatically by stationary or handheld data loggers and transmitted to a database using a telemetry system. Periodic field audits by experienced staff will be conducted to verify that SOPs are being followed. Equipment calibration will follow manufacturers' recommendations to ensure data quality. Manually recorded data will be entered and/or transferred into a database. In addition, process monitoring and control data generated in facilities/plants will be automatically recorded into a data historian that resides in the plant control system. The data will be maintained in a database and reviewed by an experienced field staff member or chemist. Historical trends, water quality data, and well construction details will also be made available to the field crew so that anomalous data (compared to historical values) can be identified in a timely manner and field verified/corrected after consulting with an experienced scientist or chemist, as appropriate.

Onsite Laboratory Data

Certain testing for process control monitoring will be performed at an onsite laboratory in accordance with site-specific SOPs (O&M Manual Volume 2, Appendix A). Onsite lab measurements include Cr(VI), Cr(T), ferrous iron, conductivity, turbidity, pH, nitrate, sulfate, alkalinity, total organic carbon, orthophosphate, manganese, and total dissolved solids (see O&M Manual Volume 2, Section 7.1 for list of measurements and Appendix A for SOPs). Additional measurements could be added in the future.

The onsite lab data will be recorded in a bench log book and entered into a spreadsheet and/or database periodically. Although the onsite data will not be validated using the same procedures as the offsite lab data, they will be reviewed; anomalous results will be identified and reviewed and, if needed, reanalyzed at the direction of the project chemist. After quality control (QC) review, data will be stored in a database for use by the project team. Onsite laboratory samples will periodically be analyzed in conjunction with offsite analysis, and the data will be reviewed/compared for quality and accuracy.

Offsite Laboratory Data

The data flow (electronic and hard copy) from offsite laboratory to the project chemist is tracked to ensure that the data are reviewed and validated in a timely manner. The project chemist will discuss and resolve technical issues, if any, with the laboratory. Electronic data will be entered into a database where they undergo QC checks before being validated. Validated data will be stored in a database for use by project team. The laboratory will maintain electronic and hardcopy records sufficient to re-create each analytical event. In compliance with Section XXV of the CD (DOI 2013), PG&E will maintain offsite laboratory records for 10 years following receipt of certification of completion. At the conclusion of the record retention period, PG&E will notify DOI and DTSC in

writing at least 90 days prior to the destruction of any records and will provide DOI and DTSC with the opportunity to take possession of any records. At a minimum, the laboratory will maintain the following records:

- Raw data, including instrument printouts, bench work sheets, and chromatograms, with compound identification and quantitation reports.
- Laboratory-specific, written SOPs for each analytical method and QA/QC function implemented during the analysis of project samples.

Maintenance Records

It is the responsibility of the plant/system operators to incorporate regular preventative maintenance into the routine work schedule based on guidelines presented in this plan and the maintenance requirements provided in the manufacturer's manual for each piece of equipment in the plant. Computerized maintenance management programs will be implemented at the facility, as appropriate, to keep track of maintenance requirements. In those cases, operators will access the program to determine required maintenance tasks. The maintenance management program will have the capacity to issue work orders for routine maintenance activities. Records documenting completion of preventative maintenance tasks will be kept onsite.

Hardcopy and electronic versions will be archived in project files, on electronic archive tapes, and/or on other electronic storage media for the duration of remedy operation as specified in Section L3.2 (Recordkeeping). All electronic data will be subject to routine back-up until it is archived for long-term retention.

L3.2 Recordkeeping

In compliance with Section XII of the 1996 CACA (DTSC 1996) and Section XXV of the CD (DOI 2013), PG&E will maintain all records for 10 years following receipt of certification of completion. At the conclusion of the record retention period, PG&E will notify DOI and DTSC in writing at least 90 days prior to the destruction of any records and will provide DOI and DTSC with the opportunity to take possession of any records.

L3.3 Reporting

In compliance with Attachment 7 of the 1996 CACA (DTSC 1996) as well as Section X of the 2013 CD and Section 5 of Appendix C of the 2013 CD (DOI 2013), progress reports will be submitted monthly during construction and quarterly after the remedy has been implemented and demonstrated to be operating as intended. Exhibit L2.2-2 in Section L2 presents a quarterly report template that was developed with guidance from the *O&M Report Template for Ground Water Remedies (with Emphasis on Pump and Treat Systems)* (USEPA 2005). A monthly construction report template is included in the Construction/Remedial Action Work Plan (CH2M HILL 2015; see Exhibit 2.2-2 of the Work Plan). It is noted that the agencies may request additional information or reports as the remedy progresses.

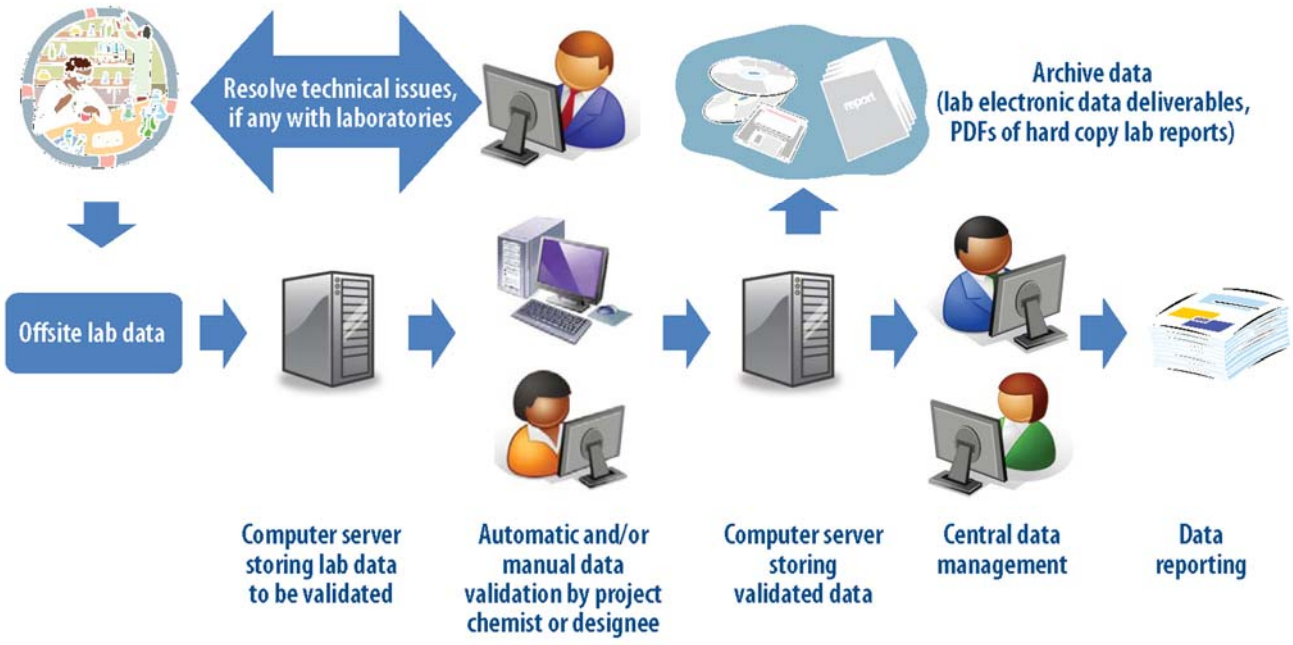

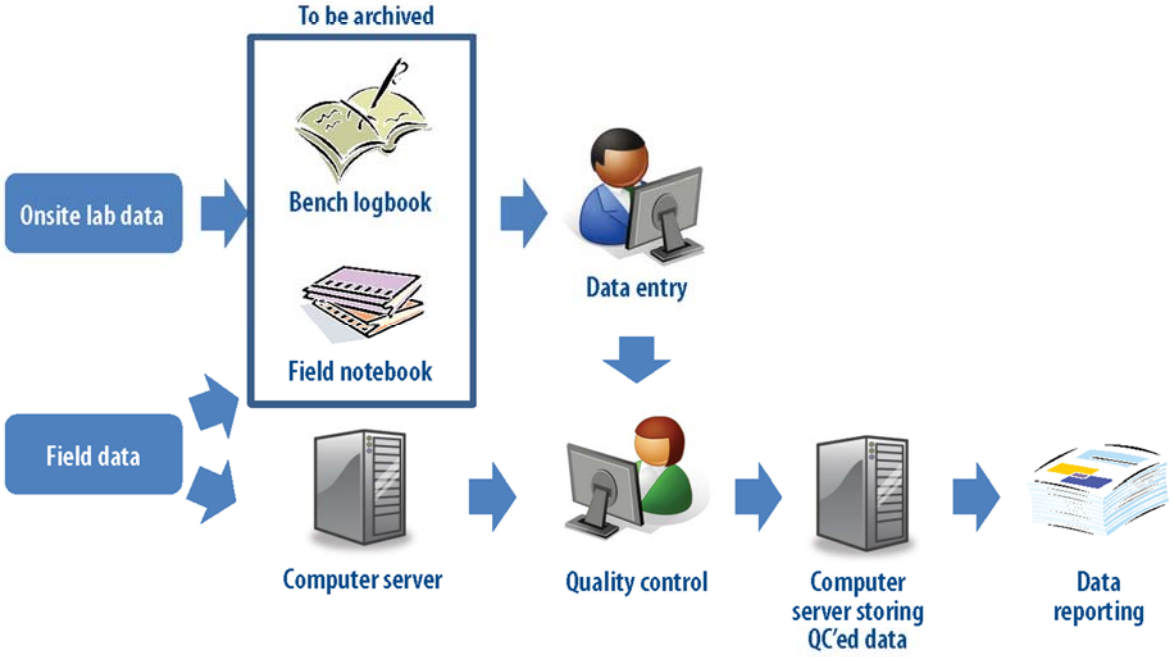

Exhibit L3.1-1
Simplified Data Management Process
Groundwater Remedy Operation and Maintenance Manual
PG&E Topock Compressor Station, Needles, California

SECTION L4

Corrective Measures/Remedial Action Completion Criteria

The RAOs are defined in the DTSC Statement of Basis (DTSC 2011a) and DOI ROD (DOI 2010); as noted above in Section 1.1.1 they are:

1. Prevent ingestion of groundwater as a potable water source having Cr(VI) in excess of the regional background concentration of 32 µg/L.
2. Prevent or minimize migration of Cr(T) and Cr(VI) in groundwater to ensure concentrations in surface water do not exceed water quality standards that support the designated beneficial uses of the Colorado River (11 µg/L Cr[VI]).
3. Reduce the mass of Cr(T) and Cr(VI) in groundwater at the site to achieve compliance with ARARs in groundwater. This RAO will be achieved through the cleanup goal of the regional background concentration of 32 µg/L of Cr(VI).
4. Ensure that the geographic location of the target remediation area does not permanently expand following completion of the remedial action.

The completion criteria or performance standards for the groundwater remedy are mainly driven by RAO #3, reducing Cr(VI) concentrations throughout the plume to concentrations of 32 µg/L or less. During the time prior to attaining these concentrations, an institutional control will be established to prohibit development of the groundwater within the plume as a drinking water source, to meet RAO #1. Following attainment of the Cr(VI) concentrations of 32 µg/L or less, the IC can be lifted. Reducing concentrations of Cr(VI) in groundwater to concentrations of 32 µg/L or less will meet RAO #2 by increasing the level of certainty that surface water quality will continue to remain below surface water quality standards in the future. Reducing concentrations of Cr(VI) in groundwater to concentrations of 32 µg/L or less will meet RAO #4 by reducing, and eventually eliminating, the target remediation area.

Attainment of the completion criteria or achievement of performance standards (Cr[VI] concentrations of 32 µg/L or less) is intended to be applied throughout the area of contaminated groundwater. In establishing this criterion, the following are recognized:

- Attaining the cleanup criteria of 32 µg/L Cr(VI) in groundwater may be through active remediation or through MNA after active remediation has been employed and optimized.
- Different areas of the plume may reach the cleanup criteria of 32 µg/L Cr(VI) in groundwater at different times.

MNA is included as a long-term component of the groundwater remedy to address residual chromium that may remain in recalcitrant portions of the aquifer following efforts to enhance and optimize in-situ treatment and flushing systems during the O&M phase. Decisions on specific areas of the plume appropriate for MNA will be made during future evaluations, such as 5-year reviews, based on information about the types and options for active remediation system adjustments, data evaluating the effectiveness of active remediation systems, and location of proposed MNA areas relative to natural reductive zones in the aquifer.

Due to heterogeneity in the aquifer, it is expected that during the decades-long O&M period there will be portions of the site that attain the RAOs at different times. The existing footprint of the plume is expected to change in size and shape, and to diminish. In addition, there may be portions of the site where it could be determined that MNA is appropriate to address residual Cr(VI). During future evaluations, such as 5-year reviews, distinct geographical areas of the site where RAOs have been attained and/or where it has been determined that MNA is appropriate to address residual Cr(VI) could be designated (as appropriate) for Corrective Action/Remedial Action Completion.

For those areas, a Corrective Measure/Remedial Action Completion Report will be prepared. The completion report will demonstrate how the criteria for the completion of the groundwater remedy have been satisfied and outline the criteria for when O&M may cease. A Decommissioning Plan will also be prepared following remedial action completion and/or determination that remedial infrastructure is no longer needed to support the active operation. Post-remediation monitoring and eventual lifting of the IC will be aspects of the Corrective Measure/ Remedial Action completion.

SECTION L5

References

California Department of Fish and Wildlife (CDFW). 2013. Letter from Chris Hayes/CDFW, Deputy Regional Manager (Inland Deserts Region) to Ms. Yvonne Meeks/PG&E. Subject: Confirmation of Application of the CERCLA 121(e)(1) Permit Exemption to PG&E's Soil and Groundwater Investigation and Remediation Project. March 6, 2013.

California Department of Toxic Substances Control (DTSC). 1996. *Corrective Action Consent Agreement (Revised), Pacific Gas and Electric Company's Topock Compressor Station, Needles, California.* EPA ID No. CAT080011729. February 2.

_____. 2011a. *Statement of Basis for Groundwater Remedy at Pacific Gas and Electric Company, Topock Compressor Station, Needles, San Bernardino County, California*. EPA ID No. CAT080011729. January 31.

_____.2011b. *Final Environmental Impact Report for the Topock Compressor Station Groundwater Remediation Project.* January 31.

_____. 2012. Settlement Agreement between the Fort Mojave Indian Tribe and DTSC, dated December 19, 2012.

_____. 2013. *Topock Compressor Station Groundwater Remediation Project, Environmental Impact Report Addendum No. 1 for Alternative Freshwater Source Evaluation Activities*. August 2.

California Department of Toxic Substances Control (DTSC) and U.S. Department of the Interior (DOI). 2011. Memorandum of Understanding (MOU) concerning the coordination in overseeing the implementation of groundwater response action at Topock Compressor Station. November 22.

California Stormwater Quality Association. 2003. *California Stormwater Quality Association Construction BMP Handbook*. Sacramento, CA.

CH2M HILL. 2011. *Revised Groundwater Corrective Measure Implementation/Remedial Design (CMI/RD) Work Plan for SWMU 1/AOC 1 and AOC 10, PG&E Topock Compressor Station, Needles, California*. November 2.

_____. 2014. *Programmatic Biological Assessment for Pacific Gas and Electric Topock Compressor Station Final Groundwater Remedy*. April 28.

_____. 2015. *Construction/Remedial Action Work Plan, Pacific Gas and Electric Company, Topock Compressor Station, Needles, California.* November 18.

Pacific Gas & Electric Company (PG&E). 2015. *Cultural Impact Mitigation Program for the Topock Remediation Project, Mohave County, Arizona, and San Bernardino County, California*. November.

State Water Resources Control Board (SWRCB). 2009. Construction General Permit Fact Sheet. Adopted Order No. 2009-0009-DWQ. Sacramento, CA.

U.S. Bureau of Land Management (BLM). 2010. Programmatic Agreement among the Bureau of Land Management, Arizona Historic Preservation Officer, California State Historic Preservation Officer, and the Advisory Council on Historic Preservation for the Topock Remediation Project in San Bernardino County, California and Mohave County, Arizona. October.

_____. 2011. *PG&E Topock Remediation Project Tribal Access Plan for Federal Properties*. November 26.

_____. 2012. *Cultural and Historic Properties Management Plan for Pacific Gas and Electric Company's Topock Remediation Project.* January.

U.S. Department of the Interior (DOI). 2005. IN THE MATTER OF: Topock Compressor Station, Pacific Gas and Electric Company (Respondent), Proceeding Under Sections 104 and 122 of the Comprehensive

Environmental Response, Compensation, and Liability Act as amended 42 USC §§ 9604 and 9622— Administrative Consent Agreement. July 11.

_____. 2010. *Groundwater Record of Decision, Pacific Gas and Electric Company, Topock Compressor Station, Needles, San Bernardino County, California*. ROD cover date is December 2010; signed/approved by DOI on January 20, 2011.

_____.2011. Letter from Ms. Pamela Innis/DOI to Ms. Yvonne Meeks of PG&E. *PG&E Topock Compressor Station Remediation Site – Revised Groundwater Corrective Measure Implementation/Remedial Design Work Plan for SWMU1/AOC1 and AOC10, PG&E Topock Compressor Station, Needles, California*. November 3.

_____. 2013. Remedial Action/Remedial Design Consent Decree (CD) between the United States of America and Pacific Gas & Electric Company. Case 5:13-cv-00074-BRO-OP, Document 23. Entered November 21.

U.S. Environmental Protection Agency (USEPA). 2005. *O&M Report Template for Ground Water Remedies (with Emphasis on Pump and Treat Systems).*

Tables *(on CD-ROM only)*

Please note: These compliance tables, presented on the CD-ROM version of this O&M Manual, are copied directly from Section 6 of the Basis of Design Report to which this O&M Manual is an appendix. The table numbers have been changed, but the contents of the tables are unchanged. This includes the reference citations, which correspond to the References List (Section 9) of the BOD Report, not the References List in this O&M Manual. Please refer to Section 9 of the BOD Report to identify the sources cited in these tables. References within the tables to Tables 6.1-1, 6.1-2, 6.2-1, 6.2-1A, 6.2-2, and 6.2-3 of the BOD Report correspond to Tables L1.1-1, L1.1-2, L1.1-3, L1.1-3A, L1.1-4, and L1.1-5, respectively, in this document.

TABLE L1.1-1
Summary of Compliance with EIR Mitigation Measures
Groundwater Remedy Basis of Design Report/Final (100%) Design
PG&E Topock Compressor Station, Needles, California

Resources	Mitigation Number	Mitigation Measure	Which document(s) will contain or satisfy this measure?[1]	Action (Compliance Status)				Date Completed
				Preliminary (30%) Design	Intermediate (60%) Design	Pre-Final (90%)/Supplemental 90% Design	Final (100%) Design	
Aesthetics	**AES-1**	**Impacts on Views from Topock Maze Locus B, a Scenic Vista (Key View 5) - The proposed project shall be designed and implemented to adhere to the design criteria presented below.**						
Aesthetics	AES-1a	a) Existing mature plant specimens shall be protected in place during construction, operation, and decommissioning phases consistent with CUL1a-5. The identification of plant specimens that are determined to be mature and retained shall occur as part of the design phase and mapped/identified by a qualified plant ecologist or biologist and integrated into the final design and project implementation.	Mature Plants Survey Report including map of mature plant species Aesthetics and Visual Resources Protection and Revegetation Plan	Identification and mapping of mature plant species was completed in August 2011. The survey methodology is summarized in a technical memorandum entitled "*Topock Groundwater Remediation Project, Mature Plants Survey Methodology*" (CH2M HILL 2011b) and is included in Appendix A3 of the Basis of Design Report. The mature plant map is under preparation and will be used to guide the remedy design and the planning for construction.	The Mature Plants Survey Report (CH2M HILL 2012b) was completed on January 17, 2012, and is included in Appendix A4 of the 60% BOD Report. The report contains surveys results and associated maps, which have been used to guide the design. An overview of the report and the survey results were discussed with interested Tribes on January 26, 2012. Figure 2.4-8 in the 60% BOD Report document presents the mature plant survey information for Key Views 5 and 11. PG&E biologist Melanie Day and CH2M HILL biologist Marjorie Eisert participated in a field review of planned remedial facilities with the design team on April 23-24, 2012. A field review was also conducted on June 20 by PG&E biologist Virginia Strohl. The purpose of these field reviews along with in office reviews was to ensure the footprints of planned facilities including potential access routes are designed to avoid disturbance of sensitive habitats to the extent feasible.	An addendum to the Mature Plants Survey Report (CH2M HILL 2014j) was completed on May 22, 2014, and is included in Appendix A4 of the 90% BOD Report. The addendum contains surveys results and associated maps for the freshwater well sites (HNWR-1 and Site B) in Arizona as well as potential sites identified for soil storage and/or construction staging west of Moabi Regional Park. Figure 2.4-8 in the 90% BOD Report presents the mature plant survey information for Key Views 5 and 11. The Aesthetics and Visual Resources Protection and Revegetation Plan (CH2M HILL 2014l) is included in an appendix of the Construction/Remedial Action Work Plan. CH2M HILL biologist Steve Long and E2 biologist Russell Huddleston participated in a field review of planned remedial facilities with the design team on April 7-10, 2014. An additional field review of planned remedial facilities was conducted by CH2M HILL biologist Melissa Fowler and E2 biologist Russell Huddleston on August 6-8, 2014. PG&E biologist Virginia Strohl also led the office reviews of planned facilities and footprints. The purpose of the field reviews along with in office reviews was to ensure the footprints of planned facilities including access routes and construction footprints are designed to avoid disturbance of mature plant specimens and sensitive habitats to the extent feasible.		The survey methodology tech memo was completed on October 31, 2011, and provided to Interested Tribes on November 8, 2011. The Mature Plants Survey Report (CH2M HILL 2012e) was completed on January 17, 2012. An addendum to the Mature Plants Survey Report was completed on May 22, 2014. The Aesthetics and Visual Resources Protection and Revegetation Plan was submitted with the Construction/Remedial Action Work Plan (Appendix N) on September 8, 2014 with the 90% design submittal and again on November 18, 2015 with the final design submittal.

TABLE L1.1-1
Summary of Compliance with EIR Mitigation Measures
Groundwater Remedy Basis of Design Report/Final (100%) Design
PG&E Topock Compressor Station, Needles, California

Resources	Mitigation Number	Mitigation Measure	Which document(s) will contain or satisfy this measure?[1]	Action (Compliance Status)				Date Completed
				Preliminary (30%) Design	Intermediate (60%) Design	Pre-Final (90%)/Supplemental 90% Design	Final (100%) Design	
Aesthetics	AES-1b	b) Revegetation of disturbed areas within the riparian vegetation along the Colorado River shall occur concurrently with construction operations. Plans and specifications for revegetation shall be developed by a qualified plant ecologist or biologist before any riparian vegetation is disturbed and shall be implemented consistent with CUL-1a-5. The revegetation plan shall include specification of maintenance and monitoring requirements, which shall be implemented for a period of 5 years after project construction or after the vegetation has successfully established, as determined by a qualified plant ecologist or biologist.	Aesthetics and Visual Resources Protection and Revegetation Plan	A revegetation plan for the riparian vegetation along the river will be prepared and submitted with the final design.	A revegetation plan for the riparian vegetation along the river will be prepared and submitted with the final design.	The Aesthetics and Visual Resources Protection and Revegetation Plan is included in Appendix N of the Construction/Remedial Action Work Plan. The plan was prepared by plant ecologist Russell Huddleston of E2 Consulting under the direction of Linda Cyra-Korsgaard, a CH2M HILL landscape architect licensed in California. The plan will be implemented consistent with mitigation measure CUL-1a-5. A technical memorandum titled *Preliminary Assessment of Proposed Mitigation Planting Areas for Final Groundwater Remedy Impacts, Topock Compressor Station, California* (CH2M HILL 2015e) identifies potential revegetation areas where mitigation vegetation could be planted to offset potential impacts to riparian vegetation along the Colorado River that may occur during construction of the remedy. The memo was completed on January 27, 2015 and included in Appendix V of the Supplemental 90% for review and comment.	The *Preliminary Assessment of Proposed Mitigation Planting Areas for Final Groundwater Remedy Impacts, Topock Compressor Station, California* was revised to incorporate review comments, and was submitted with the Construction/Remedial Action Work Plan concurrently with the final design.	The Aesthetics and Visual Resources Protection and Revegetation Plan was submitted with the Construction/Remedial Action Work Plan (Appendix N) on September 8, 2014 with the 90% design submittal and again on November 18, 2015 with the final design submittal. The revised *Preliminary Assessment of Proposed Mitigation Planting Areas for Final Groundwater Remedy Impacts, Topock Compressor Station, California* (CH2M HILL 2015e) was submitted with the Construction/ Remedial Action Work Plan, concurrently with the final design submittal.
Aesthetics	AES-1c	c) Plant material shall be consistent with surrounding native vegetation.	Aesthetics and Visual Resources Protection and Revegetation Plan	This requirement will be incorporated into the revegetation plan, and therefore, will be satisfied by implementation of AES-1b/2c.	This requirement will be incorporated into the revegetation plan, and therefore will be satisfied by implementation of AES-1b/2c.	This requirement was incorporated into the revegetation plan, and therefore satisfied by implementation of AES-1b/2c.	This requirement was incorporated into the revegetation plan, and will be satisfied by implementation of AES-1b/2c.	See AES-1b/2c.
Aesthetics	AES-1d	d) The color of the wells, pipelines, reagent storage tanks, control structures, and utilities shall consist of muted, earth-tone colors that are consistent with the surrounding natural color palette. Matte finishes shall be used to prevent reflectivity along the view corridor. Integral color concrete should be used in place of standard gray concrete.	Design submittals	The requirement of this mitigation measure has been incorporated into the design criteria as presented in Appendix C of this Basis of Design Report for the preliminary design. In addition, the detailed specification for colors will also be included the intermediate (60%) design.	The requirement of this mitigation measure was incorporated into the design criteria as presented in Appendix C of the 60% BOD Report. The detailed specification for colors are included in Appendix E of the 60% BOD Report.	The requirement of this mitigation measure was incorporated into the design criteria as presented in Appendix C of the 90% BOD Report. The detailed specification for colors are included in Appendix E of the 90% BOD Report.	The requirement of this mitigation measure was incorporated into the design criteria as presented in Appendix C (Section C.8) of this Final BOD Report. The detailed specifications for colors are included in Volume 1 Specifications, Painting and Coating, Part 3, Section 3.01.D, in Appendix E of this Final BOD Report.	The Final BOD Report was submitted on November 18, 2015.
Aesthetics	AES-1e	e) The final revegetation plans and specifications shall be reviewed and approved by an architect, landscape architect, or allied design professional licensed in the State of California to ensure that the design objectives and criteria are being met. Planting associated with biological mitigation may contribute to, but may not fully satisfy, visual mitigation.	Aesthetics and Visual Resources Protection and Revegetation Plan	This requirement will be incorporated into the revegetation plan, and therefore, will be satisfied by implementation of AES-1b/2c.	This requirement will be incorporated into the revegetation plan, and therefore will be satisfied by implementation of AES-1b/2c.	This requirement was incorporated into the final revegetation plan, and therefore will be satisfied by implementation of AES-1b/2c.	This requirement was incorporated into the revegetation plan and will be satisfied by implementation of AES-1b/2c.	See AES-1b/2c.

TABLE L1.1-1
Summary of Compliance with EIR Mitigation Measures
Groundwater Remedy Basis of Design Report/Final (100%) Design
PG&E Topock Compressor Station, Needles, California

Resources	Mitigation Number	Mitigation Measure	Which document(s) will contain or satisfy this measure?[1]	Action (Compliance Status)				Date Completed
				Preliminary (30%) Design	Intermediate (60%) Design	Pre-Final (90%)/Supplemental 90% Design	Final (100%) Design	
Aesthetics	**AES-2**	**Impacts on Views from Colorado River, a Scenic Resources Corridor (Key View 11) - The proposed project shall be designed and implemented to adhere to the design criteria presented below:**						
Aesthetics	AES-2a	a) A minimum setback requirement of 20 feet from the water (ordinary high water mark or OHWM) shall be enforced, except with regard to any required river intake facilities, to prevent substantial vegetation removal along the river bank.	Design submittals	The OHWM along the bank of the Colorado River, from the mouth of Bat Cave Wash to the BNSF railroad bridge, was mapped in March 2011. The OHWM methodology is summarized in a technical memorandum entitled "*Topock Groundwater Remediation Project, Ordinary High Water Mark Mapping Methodology*" (CH2M HILL 2011d) and is included in Appendix A3 of this Basis of Design Report. A 20-feet setback from the OHWM was used to guide the placement of the River Bank Extraction Wells and associated infrastructure in the floodplain. A map showing the OHWM and the 20-feet setback is included in Figure 2-17 of the 30% BOD Report.	Figure 2.4-6 in the 60% BOD Report illustrates that the locations of the River Bank Extraction Wells and associated piping met the 20-foot setback requirement.	Figure 2.4-6 in the 90% BOD Report illustrates that the locations of the River Bank Extraction Wells and associated access road/piping corridor met the 20-foot setback requirement.	Figure 2.4-6 in this Final BOD Report illustrates that the locations of the River Bank Extraction Wells and associated access road/piping corridor will meet the 20-foot setback requirement.	The mapping methodology technical memorandum and a map with the 20-foot setback from the OHWM were submitted on November 18, 2011, and are included in Appendix A of this report.
Aesthetics	AES-2b	b) Existing mature plant specimens shall be protected in place during construction, operation, and decommissioning phases. The identification of plant specimens that are determined to be mature and retained shall occur as part of the design phase and mapped/identified by a qualified plant ecologist or biologist and integrated into the final design and project implementation consistent with CUL1a-5.	Mature Plants Survey Report including map of mature plant species Aesthetics and Visual Resources Protection and Revegetation Plan	Identification and mapping of mature plant species was completed in August 2011. The survey methodology is summarized in a technical memorandum entitled "*Topock Groundwater Remediation Project, Mature Plants Survey Methodology*" (CH2M HILL 2011b) and is included in Appendix A3 of this Basis of Design Report. The mature plant map is under preparation and will be used to guide the remedy design and the planning for construction.	The Mature Plants Survey Report (CH2M HILL 2012b) was completed on January 17, 2012, and is included in Appendix A4 of the 60% BOD Report. The report contains surveys results and associated maps, which have been used to guide the design. An overview of the report and the survey results were discussed with interested Tribes on January 26, 2012. Figure 2.4-8 in the 60% BOD Report presents the mature plant survey information for Key Views 5 and 11. PG&E biologist Melanie Day and CH2M HILL biologist Marjorie Eisert participated in a field review of planned remedial facilities with the design team on April 23-24, 2012. A field review was also conducted on June 20 by PG&E biologist Virginia Strohl. The purpose of these field reviews along with in office reviews was to ensure the footprints of planned facilities including potential access routes are designed to avoid disturbance of sensitive habitats to the extent feasible.	An addendum to the Mature Plants Survey Report (CH2M HILL 2014j) was completed on May 19, 2014 and is included in Appendix A4 of the 90% BOD Report. The addendum contains surveys results and associated maps for the freshwater well sites (HNWR-1 and Site B) in Arizona as well as potential sites identified for soil storage and/or construction staging west of Moabi Regional Park. Figure 2.4-8 in the 90% BOD Report presents the mature plant survey information for Key Views 5 and 11. The Aesthetics and Visual Resources Protection and Revegetation Plan (CH2M HILL 2014l) is included as an appendix to the Construction/Remedial Action Work Plan (CH2M HILL 2014m). CH2M HILL biologist Steve Long and E2 biologist Russell Huddleston participated in a field review of planned remedial facilities with the design team on April 7-10, 2014. An additional field review of planned remedial facilities was conducted by CH2M HILL biologist Melissa Fowler and E2 biologist Russell Huddleston on August 6-8, 2014. PG&E biologist Virginia Strohl also led the office	On January 30, 2015, PG&E conducted biological surveys to identify plant specimens that are mature and to be retained in the area proposed for remedy use at Moabi Regional Park. On June 24-25, 2015, in conformance with direction from DTSC, PG&E conducted biological surveys to identify plant specimens that are mature and to be retained in an additional 35-acre area considered on the west side of Moabi Regional Park. The survey results were summarized in a technical memorandum titled *Assessment of Biological Resources for a 35-acre Area on the West Side of Moabi Regional Park* (CH2M HILL 2015d), which is included in Appendix A10 of this report. This memorandum provides updates to the January 2015 memorandum as well as information on the natural resources observed within the larger 35-acre area. In addition, a technical memorandum titled *Assessment of Biological Resources for the Proposed Sewer and Firewater Lines for the Construction Headquarters, Final Groundwater Remedy, Topock Compressor Station, California* (CH2M HILL 2015c) was prepared to provide a general	The survey methodology tech memo was completed on October 31, 2011, and provided to Interested Tribes on November 8, 2011. The Mature Plants Survey Report was completed on January 17, 2012. An addendum to the Mature Plants Survey Report was completed on May 22, 2014. The Aesthetics and Visual Resources Protection and Revegetation Plan was submitted with the Construction/Remedial Action Work Plan (Appendix N) on September 8, 2014 with the 90% design submittal and again on November 18, 2015 with the final design submittal. The *Assessment of Biological Resources for the Proposed Soil Management Area* was completed on January 19, 2015, and submitted with the Supplemental 90% on February 5, 2015. The *Assessment of Biological Resources for the Proposed Sewer and Firewater Lines for the Construction Headquarters, Final*

TABLE L1.1-1
Summary of Compliance with EIR Mitigation Measures
Groundwater Remedy Basis of Design Report/Final (100%) Design
PG&E Topock Compressor Station, Needles, California

Resources	Mitigation Number	Mitigation Measure	Which document(s) will contain or satisfy this measure?[1]	Action (Compliance Status)				Date Completed
				Preliminary (30%) Design	Intermediate (60%) Design	Pre-Final (90%)/Supplemental 90% Design	Final (100%) Design	
						reviews of planned facilities and footprints. The purpose of the field review along with in-office reviews was to ensure the footprints of planned facilities, including access routes and construction footprints, are designed to avoid disturbance of mature plant specimens and sensitive habitats to the extent feasible. In support of the Supplemental 90% design, PG&E conducted biological surveys (including for mature plants) of the 6.74-acre Construction Headquarters and soil management area at Moabi Regional Park on November 19, 2014 to identify existing mature plant specimens to be protected in place, consistent with mitigation measures AES-2b and CUL-1a-5. The survey results was summarized in a technical memorandum titled *Assessment of Biological Resources for the Proposed Soil Management Areas* (CH2M HILL 2015b), which was submitted in Appendix A10 of the Supplemental 90%.	assessment of biological resources (including mature plants) that could be affected by the proposed sewer and fire water lines that may be installed in the future and are associated with the construction headquarters facilities that would be located to the west of Moabi Regional Park, south of the National Trails Highway. The memo was completed on August 5, 2015 and submitted for review during the 90% RTC process and is included in Appendix A10 of this report.	*Groundwater Remedy, Topock Compressor Station, California* was completed on August 5, 2015 and submitted for review during the 90% RTC process. The *Assessment of Biological Resources for a 35-acre Area on the West Side of Moabi Regional Park: Final Groundwater Remedy, Topock Compressor Station, California* was completed on September 8, 2015. The above documents are also submitted again with the final design on November 18, 2015.
Aesthetics	AES-2c	c) Revegetation of disturbed areas within the riparian vegetation along the Colorado River shall occur concurrently with construction operations. Plans and specifications for revegetation shall be developed by a qualified plant ecologist or biologist before any riparian vegetation is disturbed. The revegetation plan shall include specification of maintenance and monitoring requirements, which shall be implemented for a period of 5 years after project construction or after the vegetation has successfully established, as determined by a qualified plant ecologist or biologist.	Aesthetics and Visual Resources Protection and Revegetation Plan	A revegetation plan for the riparian vegetation along the river will be prepared and submitted with the final design.	A revegetation plan for the riparian vegetation along the river will be prepared and submitted with the final design.	A Habitat Restoration Plan for Riparian Vegetation and Other Sensitive Habitats (CH2M HILL 2014o) is included in an appendix of the Construction/Remedial Action Work Plan (CH2M HILL 2014m). A technical memorandum titled *Preliminary Assessment of Proposed Mitigation Planting Areas for Final Groundwater Remedy Impacts, Topock Compressor Station, California* (CH2M HILL 2015e) identifies potential revegetation areas where mitigation vegetation could be planted to offset potential visual impacts that may occur from potential disturbance of riparian vegetation along the Colorado River during construction of the remedy. The memo was completed on January 27, 2015 and included in Appendix V of the Supplemental 90% for review and comment.	The Preliminary Assessment of Proposed Mitigation Planting Areas for Final Groundwater Remedy Impacts, Topock Compressor Station, California was revised to incorporate review comments.	The Habitat Restoration Plan for Riparian Vegetation and Other Sensitive Habitats was submitted with the Construction/Remedial Action Work Plan on September 8, 2014. Both the revised *Preliminary Assessment of Proposed Mitigation Planting Areas for Final Groundwater Remedy Impacts, Topock Compressor Station* (CH2M HILL 2015e) and the Habitat Restoration Plan were submitted with the Construction/ Remedial Action Work Plan, concurrently with the final design submittal.

TABLE L1.1-1
Summary of Compliance with EIR Mitigation Measures
Groundwater Remedy Basis of Design Report/Final (100%) Design
PG&E Topock Compressor Station, Needles, California

Resources	Mitigation Number	Mitigation Measure	Which document(s) will contain or satisfy this measure?[1]	Action (Compliance Status)				Date Completed
				Preliminary (30%) Design	Intermediate (60%) Design	Pre-Final (90%)/Supplemental 90% Design	Final (100%) Design	
Aesthetics	AES-2d	d) Plant material shall be consistent with surrounding native vegetation.	Aesthetics and Visual Resources Protection and Revegetation Plan	This requirement will be incorporated into the revegetation plan, and therefore, will be satisfied by implementation of AES-1b/2c.	This requirement will be incorporated into the revegetation plan, and therefore will be satisfied by implementation of AES-1b/2c.	This requirement was incorporated into the Habitat Restoration Plan for Riparian Vegetation and Other Sensitive Habitats (CH2M HILL 2014o) included as an appendix to the Construction/Remedial Action Work Plan, and therefore was satisfied by implementation of AES-1b/2c.	This requirement was incorporated into the Aesthetics and Visual Resources Protection and Revegetation Plan (CH2M HILL 2014l) drafted to satisfy AES-1/2 and included as Appendix N to the Construction/Remedial Action Work Plan, and which will be followed when AES-1/2 are implemented.	The Aesthetics and Visual Resources Protection and Revegetation Plan was submitted with the Construction/Remedial Action Work Plan (Appendix N) on September 8, 2014 with the 90% design submittal and again on November 18, 2015 with the final design submittal.
Aesthetics	AES-2e	e) The color of the wells, pipelines, and utilities shall consist of muted, earth-tone colors that are consistent with the surrounding natural color palette. Matte finishes shall be used to prevent reflectivity along the view corridor. Integral color concrete should be used in place of standard gray concrete.	Design submittals	The requirement of this mitigation measure has been incorporated into the design criteria as presented in Appendix C of the Basis of Design Report for the preliminary design. In addition, the detailed specification for colors will also be included the intermediate (60%) design.	The requirement of this mitigation measure was incorporated into the design criteria as presented in Appendix C of the BOD Report for the 60% design. The detailed specifications for colors are included in Appendix E of the 60% BOD Report.	The requirement of this mitigation measure was incorporated into the design criteria as presented in Appendix C of the 90% BOD Report. The detailed specifications for colors are included in Appendix E of the 90% BOD Report.	The requirement of this mitigation measure was incorporated into the design criteria as presented in Appendix C (Section C.8) of this Final BOD Report. The detailed specifications for colors are included in Volume 1 Specifications, Painting and Coating, Part 3, Section 3.01.D, in Appendix E of this Final BOD Report.	The Final BOD Report was submitted on November 18, 2015.
Aesthetics	AES-2f	f) The final revegetation plans and specifications shall be reviewed and approved by an architect, landscape architect, or allied design professional licensed in the State of California to ensure that the design objectives and criteria are being met. Planting associated with biological mitigation may contribute to, but may not fully satisfy, visual mitigation.	Aesthetics and Visual Resources Protection and Revegetation Plan	This requirement will be incorporated into the revegetation plan, and therefore will be satisfied by implementation of AES-1b/2c.	This requirement will be incorporated into the revegetation plan, and therefore will be satisfied by implementation of AES-1b/2c.	This requirement was incorporated into the Habitat Restoration Plan for Riparian Vegetation and Other Sensitive Habitats revegetation plan (CH2M HILL 2014o) included as an appendix to the Construction/ Remedial Action Work Plan, and therefore was satisfied by implementation of AES-1b/2c.	The Aesthetics and Visual Resources Protection and Revegetation Plan is included in Appendix N of the Construction/Remedial Action Work Plan. The plan was prepared by plant ecologist Russell Huddleston of E2 Consulting under the direction of Linda Cyra-Korsgaard, a CH2M HILL landscape architect licensed in California.	The Aesthetics and Visual Resources Protection and Revegetation Plan was submitted with the Construction/Remedial Action Work Plan (Appendix N) on September 8, 2014 with the 90% design submittal and again on November 18, 2015 with the final design submittal.
Aesthetics	AES-3	**Impacts on Visual Quality and Character along the Colorado River (Key View 11)** -- Mitigation Measure AES-1 shall be implemented. Implementation of Mitigation Measures AES-1 would reduce the overall change to the visual character of the view corridor along the Colorado River. Although the proposed project would still be visible, incorporating a facilities design that is aesthetically sensitive and preserving the vegetation would blend the proposed project into their visual setting within the floodplain and would reduce the overall contrast of the proposed project.	Design submittals	This requirement is addressed by the actions taken to address AES-1.	This requirement is addressed by the actions taken to address AES-1.	This requirement is addressed by the actions taken to address AES-1.	This requirement is addressed by the actions taken to address AES-1.	See AES-1.

TABLE L1.1-1
Summary of Compliance with EIR Mitigation Measures
Groundwater Remedy Basis of Design Report/Final (100%) Design
PG&E Topock Compressor Station, Needles, California

Resources	Mitigation Number	Mitigation Measure	Which document(s) will contain or satisfy this measure?[1]	Action (Compliance Status)				Date Completed
				Preliminary (30%) Design	Intermediate (60%) Design	Pre-Final (90%)/Supplemental 90% Design	Final (100%) Design	
Air Quality	**AIR-1**	**Short-Term Construction-Related Emissions of Criteria Air Pollutants and Precursors - PG&E shall implement the fugitive dust control measures below for any construction and/or demolition activities:**						
Air Quality	AIR-1a	a) Use periodic watering for short-term stabilization of disturbed surface area to minimize visible fugitive dust emissions during dust episodes. Use of a water truck to maintain moist disturbed surfaces and actively spread water during visible dusting episodes shall be considered sufficient;	Construction/Remedial Action Work Plan; Plan for Decommissioning and Removal of IM-3 Facility and Site Restoration; Plan for Decommissioning of Remedy Facilities and Restoration	This requirement will be incorporated into the forthcoming Corrective Measure Construction/ Remedial Action Work Plan; Plan for Decommissioning and Removal of IM-3 Facility and Site Restoration; and Closure Plan for Decommissioning of Remedy Facilities and Restoration	This requirement will be incorporated into the forthcoming Corrective Measure Construction/Remedial Action Work Plan (which will be submitted as part of the 90% design) and the Plan for Decommissioning and Removal of IM-3 Facility and Site Restoration (which will be submitted as part of the Cultural Impact Mitigation Program [CIMP; PG&E 2014] and concurrently with the 90% design). The Closure Plan for Decommissioning of Remedy Facilities and Restoration will be submitted in the future, prior to decommissioning.	This requirement was incorporated into the BMP Plan of the Construction/Remedial Action Work Plan (Section 4) and the Plan for Decommissioning and Removal of IM-3 Facility and Site Restoration (presented as an appendix in the CIMP and the Construction/Remedial Action Work Plan). Both plans were submitted as part of the 90% design documents. The Closure Plan for Decommissioning of Remedy Facilities and Restoration will be submitted in the future, prior to decommissioning.	This requirement was incorporated into the BMP Plan of the Construction/Remedial Action Work Plan (Section 4) and the Plan for Decommissioning and Removal of IM-3 Facility and Site Restoration (presented as an appendix in the CIMP and the Construction/Remedial Action Work Plan). Both plans were submitted as part of the final design documents. The Closure Plan for Decommissioning of Remedy Facilities and Restoration will be submitted in the future, prior to decommissioning.	The Construction/Remedial Action Work Plan was submitted on November 18, 2015. The revised IM-3 Decommissioning Plan was included in the C/RAWP as Appendix F and as part of the CIMP in Appendix H.
Air Quality	AIR-1b	b) Cover loaded haul vehicles while operating on publicly maintained paved surfaces;	Construction/Remedial Action Work Plan; Plan for Decommissioning and Removal of IM-3 Facility and Site Restoration; Plan for Decommissioning of Remedy Facilities and Restoration	This requirement will be incorporated into the forthcoming Corrective Measure Construction/ Remedial Action Work Plan; Plan for Decommissioning and Removal of IM-3 Facility and Site Restoration; and Closure Plan for Decommissioning of Remedy Facilities and Restoration	This requirement will be incorporated into the forthcoming Corrective Measure Construction/Remedial Action Work Plan which will be submitted as part of the 90% design, and the Plan for Decommissioning and Removal of IM-3 Facility and Site Restoration which will be submitted as part of the CIMP and concurrently with the 90% design. The Closure Plan for Decommissioning of Remedy Facilities and Restoration will be submitted in the future, prior to decommissioning.	This requirement was incorporated into the BMP Plan of the Construction/Remedial Action Work Plan (Section 4) and the Plan for Decommissioning and Removal of IM-3 Facility and Site Restoration (presented as an appendix in the CIMP and the Construction/Remedial Action Work Plan). Both plans were submitted as part of the 90% design documents. The Closure Plan for Decommissioning of Remedy Facilities and Restoration will be submitted in the future, prior to decommissioning.	This requirement was incorporated into the BMP Plan of the Construction/Remedial Action Work Plan (Section 4) and the Plan for Decommissioning and Removal of IM-3 Facility and Site Restoration (presented as an appendix in the CIMP and the Construction/Remedial Action Work Plan). Both plans were submitted as part of the final design documents. The Closure Plan for Decommissioning of Remedy Facilities and Restoration will be submitted in the future, prior to decommissioning.	The Construction/Remedial Action Work Plan was submitted on November 18, 2015. The Revised IM-3 Decommissioning Plan was included in the C/RAWP as Appendix F and as part of the CIMP in Appendix H.
Air Quality	AIR-1c	c) Stabilize (using soil binders or establish vegetative cover) graded site surfaces upon completion of grading when subsequent development is delayed or expected to be delayed more than 30 days, except when such delay is caused by precipitation that dampens the disturbed surface sufficiently to eliminate visible fugitive dust emissions;	Construction/Remedial Action Work Plan; Plan for Decommissioning and Removal of IM-3 Facility and Site Restoration; Plan for Decommissioning of Remedy Facilities and Restoration	This requirement will be incorporated into the forthcoming Corrective Measure Construction/ Remedial Action Work Plan; Plan for Decommissioning and Removal of IM-3 Facility and Site Restoration; and Closure Plan for Decommissioning of Remedy Facilities and Restoration	This requirement will be incorporated into the forthcoming Corrective Measure Construction/Remedial Action Work Plan which will be submitted as part of the 90% design, and the Plan for Decommissioning and Removal of IM-3 Facility and Site Restoration which will be submitted as part of the CIMP and concurrently with the 90% design. The Closure Plan for Decommissioning of Remedy Facilities and Restoration will be submitted in the future, prior to decommissioning.	This requirement was incorporated into the BMP Plan of the Construction/Remedial Action Work Plan (Section 4) and the Plan for Decommissioning and Removal of IM-3 Facility and Site Restoration (presented as an appendix in the CIMP and the Construction/Remedial Action Work Plan). Both plans were submitted as part of the 90% design documents. The Closure Plan for Decommissioning of Remedy Facilities and Restoration will be submitted in the future, prior to decommissioning.	This requirement was incorporated into the BMP Plan of the Construction/Remedial Action Work Plan (Section 4) and the Plan for Decommissioning and Removal of IM-3 Facility and Site Restoration (presented as an appendix in the CIMP and the Construction/Remedial Action Work Plan). Both plans were submitted as part of the final design documents. The Closure Plan for Decommissioning of Remedy Facilities and Restoration will be submitted in the future, prior to decommissioning.	The Construction/Remedial Action Work Plan was submitted on November 18, 2015. The revised IM-3 Decommissioning Plan was included in the C/RAWP as Appendix F and as part of the CIMP in Appendix H.

TABLE L1.1-1
Summary of Compliance with EIR Mitigation Measures
Groundwater Remedy Basis of Design Report/Final (100%) Design
PG&E Topock Compressor Station, Needles, California

Resources	Mitigation Number	Mitigation Measure	Which document(s) will contain or satisfy this measure?[1]	Action (Compliance Status)				Date Completed
				Preliminary (30%) Design	Intermediate (60%) Design	Pre-Final (90%)/Supplemental 90% Design	Final (100%) Design	
Air Quality	AIR-1d	d) Cleanup project-related track out or spills on publicly maintained paved surfaces within twenty-four hours; and	Construction/Remedial Action Work Plan; Plan for Decommissioning and Removal of IM-3 Facility and Site Restoration; Plan for Decommissioning of Remedy Facilities and Restoration	This requirement will be incorporated into the forthcoming Corrective Measure Construction/ Remedial Action Work Plan; Plan for Decommissioning and Removal of IM-3 Facility and Site Restoration; and Closure Plan for Decommissioning of Remedy Facilities and Restoration	This requirement will be incorporated into the forthcoming Corrective Measure Construction/Remedial Action Work Plan which will be submitted as part of the 90% design, and the Plan for Decommissioning and Removal of IM-3 Facility and Site Restoration which will be submitted as part of the CIMP and concurrently with the 90% design. The Closure Plan for Decommissioning of Remedy Facilities and Restoration will be submitted in the future, prior to decommissioning.	This requirement was incorporated into the BMP Plan of the Construction/Remedial Action Work Plan (Section 4) and the Plan for Decommissioning and Removal of IM-3 Facility and Site Restoration (presented as an appendix in the CIMP and the Construction/Remedial Action Work Plan). Both plans were submitted as part of the 90% design documents. The Closure Plan for Decommissioning of Remedy Facilities and Restoration will be submitted in the future, prior to decommissioning.	This requirement was incorporated into the BMP Plan of the Construction/Remedial Action Work Plan (Section 4) and the Plan for Decommissioning and Removal of IM-3 Facility and Site Restoration (presented as an appendix in the CIMP and the Construction/Remedial Action Work Plan). Both plans were submitted as part of the final design documents. The Closure Plan for Decommissioning of Remedy Facilities and Restoration will be submitted in the future, prior to decommissioning.	The Construction/Remedial Action Work Plan was submitted on November 18, 2015. The revised IM-3 Decommissioning Plan was included in the C/RAWP as Appendix F and as part of the CIMP in Appendix H.
Air Quality	AIR-1e	e) Curtail nonessential earth-moving activity under high wind conditions (greater than 25 miles per hour) or develop a plan to control dust during high wind conditions. For purposes of this rule, a reduction in earth-moving activity when visible dusting occurs from moist and dry surfaces due to wind erosion shall be considered sufficient to maintain compliance.	Construction/Remedial Action Work Plan; Plan for Decommissioning and Removal of IM-3 Facility and Site Restoration; Plan for Decommissioning of Remedy Facilities and Restoration	This requirement will be incorporated into the forthcoming Corrective Measure Construction/ Remedial Action Work Plan; Plan for Decommissioning and Removal of IM-3 Facility and Site Restoration; and Closure Plan for Decommissioning of Remedy Facilities and Restoration	This requirement will be incorporated into the forthcoming Corrective Measure Construction/Remedial Action Work Plan which will be submitted as part of the 90% design, and the Plan for Decommissioning and Removal of IM-3 Facility and Site Restoration which will be submitted as part of the CIMP and concurrently with the 90% design. The Closure Plan for Decommissioning of Remedy Facilities and Restoration will be submitted in the future, prior to decommissioning.	This requirement was incorporated into the BMP Plan of the Construction/Remedial Action Work Plan (Section 4) and the Plan for Decommissioning and Removal of IM-3 Facility and Site Restoration (presented as an appendix in the CIMP and the Construction/Remedial Action Work Plan). Both plans were submitted as part of the 90% design documents. The Closure Plan for Decommissioning of Remedy Facilities and Restoration will be submitted in the future, prior to decommissioning.	This requirement was incorporated into the BMP Plan of the Construction/Remedial Action Work Plan (Section 4) and the Plan for Decommissioning and Removal of IM-3 Facility and Site Restoration (presented as an appendix in the CIMP and the Construction/Remedial Action Work Plan). Both plans were submitted as part of the final design documents. The Closure Plan for Decommissioning of Remedy Facilities and Restoration will be submitted in the future, prior to decommissioning.	The Construction/Remedial Action Work Plan was submitted on November 18, 2015. The revised IM-3 Decommissioning Plan was included in the C/RAWP as Appendix F and as part of the CIMP in Appendix H.
Biological Resources	BIO-1	**Potential Fill of Wetlands and Other Waters of the United States and Disturbance or Removal of Riparian Habitat** -Areas of sensitive habitat in the project area have been identified during project surveys. These areas include floodplain and riparian areas, wetlands, and waters of the United States. Habitats designated by CDFW as sensitive, including desert washes and desert riparian, are also included. To the extent feasible, elements of the project shall be designed to avoid direct effects on these sensitive areas. During the design process and before ground disturbing activities within such areas (not including East Ravine), a qualified biologist shall coordinate with PG&E to ensure that the footprints of construction zones, drill pads, staging areas, and access routes are designed to avoid disturbance of sensitive habitats to the extent feasible. DTSC shall be responsible for enforcing compliance with design and all preconstruction measures.	Design submittals	During the preparation of the Construction/ Remedial Action Work Plan as part of the design process, a qualified biologist will coordinate to ensure that the footprints of construction zones, drill pads, staging areas, and access routes are designed to avoid disturbance of sensitive habitats (floodplain and riparian areas, wetlands, waters of the US, desert washes, and desert riparian) to the extent feasible. The draft and final work plans are planned for submittal in 2012.	During the preparation of the Construction/Remedial Action Work Plan as part of the design process, a qualified biologist will coordinate to ensure that the footprints of construction zones, drill pads, staging areas, and access routes are designed to avoid disturbance of sensitive habitats (floodplain and riparian areas, wetlands, waters of the US, desert washes, and desert riparian) to the extent feasible. The draft Construction/Remedial Action Work Plan is planned for submittal in late 2013, concurrently with the 90% design.	CH2M HILL biologist Steve Long and E2 biologist Russell Huddleston participated in a field review of planned remedial facilities with the design team on April 7-10, 2014. An additional field review of planned remedial facilities was conducted by CH2M HILL biologist Melissa Fowler and E2 biologist Russell Huddleston on August 6-8, 2014. CH2M HILL biologists Steve Long and Russell Huddleston also conducted field reviews of the planned facilities at Moabi Regional Park on November 19, 2014. PG&E biologist Virginia Strohl also led the office reviews of planned facilities and footprints. The purpose of the field review along with in-office reviews was to ensure the footprints of planned facilities, including access routes and	PG&E biologist Virginia Strohl led the office reviews of planned facilities and footprints in September 2015. The purpose of the review was to ensure that the footprints of planned facilities, including footprints of construction zones, staging areas, and access routes had been designed to avoid direct effects on sensitive habitats to the extent feasible. The Construction/Remedial Action Work Plan was submitted concurrently with the final design documents.	September 22, 2015.

TABLE L1.1-1
Summary of Compliance with EIR Mitigation Measures
Groundwater Remedy Basis of Design Report/Final (100%) Design
PG&E Topock Compressor Station, Needles, California

Resources	Mitigation Number	Mitigation Measure	Which document(s) will contain or satisfy this measure?[1]	Action (Compliance Status)				Date Completed
				Preliminary (30%) Design	Intermediate (60%) Design	Pre-Final (90%)/Supplemental 90% Design	Final (100%) Design	
						construction footprints, are designed to avoid disturbance of sensitive habitats to the extent feasible. The Construction/Remedial Action Work Plan was submitted on September 8, 2014 as part of the 90% design document.		
Biological Resources	BIO-1	If during the design process it is shown that complete avoidance of habitats under USACE jurisdiction is not feasible, the Section 404 permitting process shall be completed, or the substantive equivalent per CERCLA Section 121(e)(1). In either event, the acreage of affected jurisdictional habitat shall be replaced and/or rehabilitated to ensure "no-net-loss." Before any ground-disturbing project activities begin in areas that contain potentially jurisdictional wetlands, the wetland delineation findings shall be documented in a detailed report and submitted to USACE for verification as part of the formal Section 404 wetland delineation process and to DTSC. For all jurisdictional areas that cannot be avoided as described above, authorization for fill of wetlands and alteration of waters of the United States shall be secured from USACE through the Section 404 permitting process before project implementation. Habitat restoration, rehabilitation, and/or replacement shall be at a location and by feasible methods agreeable to USACE and consistent with applicable county and agency policies and codes. Minimization and compensation measures adopted through any applicable permitting processes shall be implemented. Alternately, if USACE declines to assert jurisdiction because it determines that CERCLA Section 121(e)(1) applies, the substantive equivalent of the Section 404 permitting process shall be complied with by ensuring that the acreage of jurisdictional wetland affected is be replaced on a "no-net-loss" basis in accordance with the substantive provisions of USACE regulations. Habitat restoration, rehabilitation, and/or replacement shall be at a location and by feasible methods consistent with USACE methods, and consistent with the purpose and intent of applicable county and agency policies and codes. Minimization and compensation measures adopted through any applicable permitting processes shall be implemented. In any event, a report shall be submitted to DTSC to document compliance with these mandates.	Jurisdictional Delineation of Waters and Wetlands Report	During the preliminary (30%) design, it has been determined that complete avoidance of habitats under USACE jurisdiction (e.g., Bat Cave Wash) is not feasible. PG&E will work with the USACE to determine and complete the Section 404 permitting process or the substantive equivalent per CERCLA Section 121(e)(1). It is anticipated that a wetland delineation will be conducted in the Spring of 2012.	Figure 2.4-5 in the 60% BOD Report shows the overlaps between planned remedy infrastructure and the USACE jurisdictional waters/wetlands. As shown in Figure 2.4-5, complete avoidance of washes is not feasible due to the need to install remediation and monitoring wells in washes (e.g., a wash in the Upland, Bat Cave Wash). On February 12, 2013, PG&E consulted with Mr. Gerardo Salas of USACE Los Angeles District in Los Angeles regarding the application of the CERCLA 121(e)(1) permit exemption to the Topock remediation project. PG&E will continue to coordinate with USACE on this matter, including on the substantive requirements of CWA Section 404.	On February 13-17, 2012, a wetland delineation was conducted to determine and map the extent of wetlands and other waters of the U.S. located within the EIR project area. Additional wetland delineation was conducted on July 16-17 and December 12-13, 2012, in study areas identified in the alternative freshwater evaluation. A report titled "*Wetlands and Waters of the United States Final Delineation Report for the Topock Compressor Station Groundwater Remediation Project, San Bernardino County, California*" (CH2M HILL 2014c) was prepared to summarize results of the above delineation efforts and submitted to DTSC and DOI on April 18, 2014. The report is also included in Appendix A3 of the 90% BOD Report. In support of the Supplemental 90% design, PG&E conducted surveys for jurisdictional waters and wetlands in the 6.74-acre Construction Heaquarters and soil management area at Moabi Regional Park on November 19, 2014. The survey results were summarized in a technical memorandum titled *Assessment of Biological Resources for the Proposed Soil Management Areas* (CH2M HILL 2015b), which was submitted with the Supplemental 90%. On July 10, 2013, the USACE confirmed that CERCLA 121(e)(1) permit exemption applies to the Topock remediation project, and therefore, PG&E is not required to comply with the administrative and procedural elements of Section 404 of the Clean Water Act; however, PG&E is obligated to comply with the substantive elements that would	On January 30, 2015, PG&E conducted biological surveys (including habitats under USACE jurisdiction) of the area proposed for remedy use at Moabi Regional Park. On June 24-25, 2015, in conformance with direction from DTSC, PG&E conducted surveys (for jurisdictional waters and wetlands) of an additional 35-acre area on the west side of Moabi Regional Park. The survey results were summarized in a technical memorandum titled *Assessment of Biological Resources for a 35-acre Area on the West Side of Moabi Regional Park* (CH2M HILL 2015d). This memorandum provides updates to the January 2015 memorandum as well as information on the natural resources observed within the larger 35-acre area, and is also included in Appendix A10 of this report. In addition, a technical memorandum titled *Assessment of Biological Resources for the Proposed Sewer and Firewater Lines for the Construction Headquarters, Final Groundwater Remedy, Topock Compressor Station, California* (CH2M HILL 2015c) was prepared to provide a general assessment of biological resources (including jurisdictional waters and wetlands) that could be affected by the proposed sewer and fire water lines that may be installed in the future and are associated with the construction headquarters facilities that would be located to the west of Moabi Regional Park, south of the National Trails Highway. The memo was completed on August 5, 2015 and submitted for review during the 90% RTC process and is included in Appendix A10 of this report.	On July 10, 2013, USACE issued a letter (USACE 2013a) that confirmed that a Section 404 permit is not required for the Topock remediation project because the site is exempted under CERCLA 121(e)(1). Additionally, USACE confirmed that it will not verify a jurisdictional delineation for this action because a permit is not required (G. Salas USACE, email communication to V. Nez PG&E, July 12, 2013). The wetland delineation report (CH2M HILL 2014c) was completed on April 18, 2014. The *Assessment of Biological Resources for the Proposed Soil Management Areas* (CH2M HILL 2015b) was completed on January 19, 2015. The *Assessment of Biological Resources for a 35-acre Area on the West Side of Moabi Regional Park: Final Groundwater Remedy, Topock Compressor Station, California* (CH2M HILL 2015d) was completed on September 8, 2015. The *Assessment of Biological Resources for the Proposed Sewer and Firewater Lines for the Construction Headquarters, Final Groundwater Remedy, Topock Compressor Station, California* was completed on August 5, 2015. The above documents are included in Appendix A of this report. The *Habitat Restoration Plan for Riparian Vegetation and Other Sensitive Habitats* (CH2M HILL 2014o) and the revised *Havasu National Wildlife Refuge Habitat*

TABLE L1.1-1
Summary of Compliance with EIR Mitigation Measures
Groundwater Remedy Basis of Design Report/Final (100%) Design
PG&E Topock Compressor Station, Needles, California

Resources	Mitigation Number	Mitigation Measure	Which document(s) will contain or satisfy this measure?[1]	Action (Compliance Status)				Date Completed
				Preliminary (30%) Design	Intermediate (60%) Design	Pre-Final (90%)/Supplemental 90% Design	Final (100%) Design	
						normally be required by a permit. The USACE also stated that it therefore will not verify the wetlands and waters delineation. Therefore, PG&E is not seeking verification from the USACE. Rather, PG&E assumes that the jurisdictional waters and wetlands delineated and identified as such in the aforementioned report are all the jurisdictional waters under Section 404 of the CWA. The locations of jurisdictional waters have been incorporated into the design. At the 90%/Supplemental 90% design stage, the final remedy avoids almost all permanent impacts within USACE jurisdictional areas with the following exceptions. There is one planned well, IRL-4, that will occur within a jurisdictional water of the U.S. There is also a freshwater pipeline that will be installed within an existing unpaved access road within the 100-year floodplain of the Colorado River. In addition, piping and conduits will be installed in two locations in Bat Cave Wash – one location in the Upland Area and one location near the TCS. However, complete avoidance of other jurisdictional non-wetland waters is not feasible. It has been determined that in order to meet the goals of protection of human health and the environment, to meet the RAOs for the remedy, to monitor remedy performance, to gather data for demonstration of compliance, as well as in response to resolution of design comments with the Tribes, infrastructure (remediation, monitoring wells, and associated piping/conduits) must be installed in certain washes. There are no practicable alternatives to locating certain infrastructure within waters of the United States. Figure 2.4-5 in the 90% BOD Report shows the unavoidable overlaps between planned remedy infrastructure and the USACE jurisdictional waters. In such cases where complete avoidance is not feasible, certain best management	The locations of USACE jurisdictional habitats were considered during the design. At the final design stage, the final remedy avoids almost all permanent impacts within USACE jurisdictional habitats with the following exceptions (see Figure 2.4-5 of this BOD Report): 1) Inner Recirculation Loop Well IRL-4 will occur within a jurisdictional water of the U.S. 2) Remedy and monitoring wells and associated piping/conduits will be installed in Bat Cave Wash, a jurisdictional water of the U.S. 3) Freshwater supply well HNWR-1A, contingent Site B well, associated equipment, and a portion of the freshwater pipeline will be installed within the 100-year floodplain of the Colorado River. 4) Riverbank Extraction Well RB-5, monitoring well MW-W, a portion of Pipeline C, and a portion of the ring road will be installed within the 100-year floodplain of the Colorado River. There are no practicable alternatives to locating the aforementioned infrastructure within waters of the U.S. In such cases where avoidance is not feasible, BMPs will be implemented to avoid and minimize temporary and permanent impacts for activities occurring within jurisdictional wetlands and non-wetland waters of the U.S. (for brevity, the detailed discussion on BMPs in the previous column is not repeated here). The *Preliminary Assessment of Proposed Mitigation Planting Areas for Final Groundwater Remedy Impacts, Topock Compressor Station, California* was revised to incorporate review comments, and was submitted with the Construction/Remedial Action Work Plan concurrently with the final design.	*Restoration Plan* (CH2M HILL 2015g) were submitted with the Construction/Remedial Action Work Plan on September 8, 2014 (90% design) and submitted again on November 18, 2015 (final design). The revised *Preliminary Assessment of Proposed Mitigation Planting Areas for Final Groundwater Remedy Impacts, Topock Compressor Station, California* was submitted with the Construction/Remedial Action Work Plan on November 18, 2015 (final design).

TABLE L1.1-1
Summary of Compliance with EIR Mitigation Measures
Groundwater Remedy Basis of Design Report/Final (100%) Design
PG&E Topock Compressor Station, Needles, California

Resources	Mitigation Number	Mitigation Measure	Which document(s) will contain or satisfy this measure?[1]	Action (Compliance Status)				Date Completed
				Preliminary (30%) Design	Intermediate (60%) Design	Pre-Final (90%)/Supplemental 90% Design	Final (100%) Design	
						practices (BMPs) (Exhibit 6.1-1 at the end of this table) will be implemented to avoid and minimize temporary and permanent impacts for activities occurring within jurisdictional wetlands and non-wetland waters of the U.S. Although the USACE did not provide a list of measures that may be taken to reduce impacts to jurisdictional waters and wetlands, the California Department of Fish and Wildlife (CDFW) requires compliance with avoidance and mitigation measures (AMMs) for all work conducted in CDFW jurisdictional washes (the 2013 CDFW AMMs can be downloaded from www.dtsc-topock.com, under Document Library, Other and Environmental Impact Review, Approval Letters and Communications). The geographic extent of CDFW's jurisdiction is broader than the jurisdictional extent of the USACE under CWA 404 and thus, avoidance and mitigation measures applied to CDFW jurisdictional waters would as a geographic consequence also be applied to CWA 404 waters. While Arizona does not have a similar state program, PG&E will also implement the same AMMs in Arizona identified by CDFW for California as well to ensure appropriate protection to CWA 404 jurisdictional areas in the project area, including those in Arizona. In addition to the CDFW AMMs, PG&E has identified additional BMPs for implementation during remedy construction, operation and maintenance, as well as decommissioning. The additional BMPs are described in the *Protocol for Compliance with EIR Mitigation and Monitoring Reporting Program BIO-1 and Applicable or Relevant and Appropriate Requirement (ARAR) #32 at the Topock Compressor Station* (see Exhibit 6.1-1 presented at the end of this table). A Habitat Restoration Plan for Riparian Vegetation and Other		

TABLE L1.1-1
Summary of Compliance with EIR Mitigation Measures
Groundwater Remedy Basis of Design Report/Final (100%) Design
PG&E Topock Compressor Station, Needles, California

Resources	Mitigation Number	Mitigation Measure	Which document(s) will contain or satisfy this measure?[1]	Action (Compliance Status)				Date Completed
				Preliminary (30%) Design	Intermediate (60%) Design	Pre-Final (90%)/Supplemental 90% Design	Final (100%) Design	
						Sensitive Habitats (CH2M HILL 2014o) was also prepared and included in an appendix of the Construction/Remedial Action Work Plan. A technical memorandum titled the *Preliminary Assessment of Proposed Mitigation Planting Areas for Final Groundwater Remedy Impacts, Topock Compressor Station, California* (CH2M HILL 2015e) was prepared to identify potential riparian revegetation areas where mitigation vegetation could be planted to offset potential plant impacts that may occur during construction of the remedy. The memo was completed on January 27, 2015 and included in Appendix V of the Supplemental 90% for review and comment.		
Biological Resources	BIO-1 (continued)	If during the design process it is shown that complete avoidance of habitats under CDFG jurisdiction (such as changes to the natural flow and/or bed and bank of a waterway) is infeasible, a Section 1602 streambed alteration agreement shall be obtained from CDFG and affected habitats shall be replaced and/or rehabilitated. If complete avoidance of identified riparian habitat is not feasible, the acreage of riparian habitat that would be removed shall be replaced or rehabilitated on a no-net-loss basis in accordance with CDFG regulations and, if applicable, as specified in the streambed alteration agreement, if needed. Habitat restoration, rehabilitation, and/or replacement shall be at a location and by methods agreeable to CDFG and consistent with the purpose and intent of applicable county policies and codes, as well as those policies outlined under the respective federal agency guidance documents. Minimization and compensation measures adopted through the permitting process shall also be implemented. Restoration of any disturbed areas shall include measures to achieve "no-net-loss" of habitat functions and values existing before project implementation. These measures shall be achieved by developing and implementing a habitat restoration plan submitted to CDFG, BLM, and USFWS that is agreeable to these agencies, or, alternately, through the implementation of a habitat restoration plan consistent with the substantive policies of CDFG, BLM, and USFWS. The plan shall include a revegetation seed mix or plantings design, a site grading concept plan, success criteria for	Havasu National Wildlife Refuge Habitat Restoration Plan, Habitat Restoration Plan for Riparian Vegetation and Other Sensitive Habitats	During the preliminary (30%) design, it has been determined that complete avoidance of habitats under CDFG jurisdiction (e.g., Bat Cave Wash) is not feasible. PG&E will work with the CDFG to determine and complete the Section 1600 permitting process or the substantive equivalent per CERCLA Section 121(e)(1).	Figure 2.4-5 in the 60% BOD Report shows the overlaps between remedy infrastructure and the CDFW jurisdictional waters/wetlands. As shown in Figure 2.4-5, complete avoidance of washes is not feasible due to the need to install remediation and monitoring wells, and associated pipes and components in washes (e.g., a wash in the Upland, Bat Cave Wash). The CDFG is now the California Department of Fish and Wildlife, and thus is referred to as CDFW in this report. On December 11, 2012, PG&E consulted with CDFW District Regional Manager and his staff at the Blythe, California office regarding the substantive requirements of the CDFW Section 1602 and the application of the CERCLA 121(e)(1) permit exemption to the Topock remediation project. On February 21, 2013, CDFW staff from the Blythe office conducted a field review of the project. On March 6, 2013, the CDFW issued a letter to PG&E confirming that CERCLA 121(e)(1) applies to response actions conducted onsite at Topock, specifically soil and groundwater investigation activities and remedial actions at the site	During the design, a process similar to the above was also conducted to avoid and minimize impacts to CDFW jurisdictional waters/wetlands. CDFW jurisdictional waters in the project area were delineated and mapped. A technical memorandum titled *Riparian Vegetation and California Department of Fish and Wildlife Jurisdiction for the Topock Compressor Station Groundwater Remediation Project* (CH2M HILL 2014i) was prepared to summarize the delineation results. The memo was submitted to the CDFW on 5/9/14, and to DTSC on 5/21/14, and is also included in Appendix A3 of the 90% BOD Report. In support of the Supplemental 90% design, PG&E conducted surveys for USACE jurisdictional waters and wetlands and habitats under CDFW jurisdiction in the 6.74-acre Construction Headquarters and soil management area at Moabi Regional Park on November 19, 2014. The survey results was summarized in a technical memorandum titled *Assessment of Biological Resources for the Proposed Soil Management Areas* (CH2M HILL 2015b), which was	During the design, a process similar to the above was also conducted to avoid and minimize impacts to CDFW jurisdictional waters/wetlands. 1) The locations of CDFW jurisdictional areas have been incorporated into the design. At the final design stage, the final remedy avoids almost all permanent impacts within CDFW jurisdictional areas with the following exceptions (see Figure 2.4-5A of this BOD Report): Inner Recirculation Loop Well IRL-4 will occur within a jurisdictional water of the State. 2) Remedy and monitoring wells and associated piping/conduits will be installed in Bat Cave Wash, a jurisdictional water of the State. 3) Freshwater supply well HNWR-1A, contingent Site B well, associated equipment, and a portion of the freshwater pipeline will be installed within the 100-year floodplain of the Colorado River. 4) Riverbank Extraction Well RB-5, monitoring well MW-W, a portion of Pipeline C, and a portion of the ring road will be	On March 6, 2013, CDFW issued a letter confirming that CERCLA 121(e)(1) permit exemption applies to response actions conducted onsite as part of the Topock remediation project, and specified the substantive requirements in the form of AMMs that PG&E must comply with for the duration of the project. A technical memorandum summarizing the results of delineating CDFW jurisdictional waters in the project area (CH2M HILL 2014i) was submitted to CDFW on May 9, 2014, and to DTSC on May 21, 2014. The memo is included in Appendix A of this report. The Habitat Restoration Plan for Riparian Vegetation and Other Sensitive Habitats (CH2M HILL 2014o) and the Havasu National Wildlife Refuge Habitat Restoration Plan (CH2M HILL 2015g) were submitted with the Construction/Remedial Action Work Plan on September 8, 2014 (90% design) and November 18, 2015 (final design).

TABLE L1.1-1
Summary of Compliance with EIR Mitigation Measures
Groundwater Remedy Basis of Design Report/Final (100%) Design
PG&E Topock Compressor Station, Needles, California

Resources	Mitigation Number	Mitigation Measure	Which document(s) will contain or satisfy this measure?[1]	Action (Compliance Status)				Date Completed
				Preliminary (30%) Design	Intermediate (60%) Design	Pre-Final (90%)/Supplemental 90% Design	Final (100%) Design	
		restoration, a monitoring plan for achieving no net loss of habitat values and functions, and an adaptive management plan. Alternately, if CDFG declines to assert jurisdiction because it determines that CERCLA Section 121(e)(1) applies, and during the design process it is shown that complete avoidance of habitats under CDFG jurisdiction (such as changes to the natural flow and/or bed and bank of a waterway) is infeasible, the substantive mandates of a streambed alteration agreement shall be implemented, and affected habitats shall be replaced and/or rehabilitated. If complete avoidance of identified riparian habitat is not feasible, the acreage of riparian habitat that would be removed shall be replaced or rehabilitated on a "no-net-loss" basis in accordance with CDFG regulations and, if applicable. Habitat restoration, rehabilitation, and/or replacement shall be at a location and by methods agreeable to CDFG and consistent with the purpose and intent of applicable county policies and codes, as well as those policies outlined under the respective federal agency guidance documents. Minimization and compensation measures adopted through the permitting process shall also be implemented. Restoration of any disturbed areas shall include measures to achieve "no-net-loss" of habitat functions and values existing before project implementation. These measures shall be achieved by developing and implementing a habitat restoration plan developed consistent with the substantive policies of CDFG, BLM and USFWS. The plan shall include a revegetation seed mix or plantings design, a site grading concept plan, success criteria for restoration, a monitoring plan for achieving no net loss of habitat values and functions, and an adaptive management plan.			(CDFW 2013). As a result, no Lake or Stream Bed Alteration Agreement is required by CDFW. However, PG&E must still comply with substantive elements CDFW would require in such an Agreement for the duration of the project. In this case, the substantive elements are the avoidance and minimization measures (AMMs) attached to the March 6, 2013 letter (this letter can be viewed or downloaded from the DTSC Topock website at www.dtsc-topock.com), and any additional measures PG&E's biologist determines to be necessary.	submitted with the Supplemental 90%. The locations of jurisdictional waters have been incorporated into the design. At the 90% design stage, the final remedy avoids almost all permanent impacts within USACE jurisdictional areas with the following exceptions. There is one planned well, IRL-4, that will occur within a jurisdictional waters of the US. There is also a freshwater pipeline that will be installed within an existing unpaved access road within the 100-year floodplain of the Colorado River. In addition, piping and conduits will be installed in two locations in Bat Cave Wash – one location in the Upland Area and one location near the TCS. However, complete avoidance of other CDFW jurisdictional non-wetland waters is not feasible for the same reasons described above for the USACE jurisdictional non-wetland waters. Figure 2.4-5A in the 90% BOD Report shows the unavoidable overlaps between planned remedy infrastructure and the CDFW jurisdictional waters. A Habitat Restoration Plan for Riparian Vegetation and Other Sensitive Habitats and a Havasu National Wildlife Refuge Habitat Restoration Plan were prepared and included as appendices of the Construction/Remedial Action Work Plan. A technical memorandum titled *Preliminary Assessment of Proposed Mitigation Planting Areas for Final Groundwater Remedy Impacts, Topock Compressor Station, California* (CH2M HILL 2015e) identifies potential revegetation areas where mitigation vegetation could be planted to offset potential plant impacts that may occur during construction of the remedy, The memo was completed on January 27, 2015 and included in Appendix V of the Supplemental 90% for review and comment.	installed within the 100-year floodplain of the Colorado River. There are no practicable alternatives to locating the aforementioned infrastructure within waters of the State. A Habitat Restoration Plan for Riparian Vegetation and Other Sensitive Habitats and a Havasu National Wildlife Refuge Habitat Restoration Plan were prepared and included as appendices of the Construction/Remedial Action Work Plan. The *Preliminary Assessment of Proposed Mitigation Planting Areas for Final Groundwater Remedy Impacts, Topock Compressor Station, California* was revised to incorporate review comments, and was submitted with the Construction/Remedial Action Work Plan concurrently with the final design.	The revised *Preliminary Assessment of Proposed Mitigation Planting Areas for Final Groundwater Remedy Impacts, Topock Compressor Station, California* was submitted with the Construction/Remedial Action Work Plan on November 18, 2015 (final design).

TABLE L1.1-1
Summary of Compliance with EIR Mitigation Measures
Groundwater Remedy Basis of Design Report/Final (100%) Design
PG&E Topock Compressor Station, Needles, California

Resources	Mitigation Number	Mitigation Measure	Which document(s) will contain or satisfy this measure?[1]	Action (Compliance Status)				Date Completed
				Preliminary (30%) Design	Intermediate (60%) Design	Pre-Final (90%)/Supplemental 90% Design	Final (100%) Design	
Biological Resources	BIO-2a	**Disturbance of Special-Status Birds and Loss of Habitat.** To the extent feasible, the project implementation plans shall be designed to minimize removal of habitat for special-status birds. During the design process and before ground disturbing activities (except within the East Ravine as described in the Revised Addendum and unless otherwise required as noted below), a qualified biologist shall coordinate with PG&E to ensure that the footprints of project elements and construction zones, staging areas, and access routes are designed to avoid direct or indirect effects on habitat and nesting habitat for other special-status species, to the extent feasible. DTSC will ensure compliance with all preconstruction and construction phase avoidance measures identified during this process and included in any design plans. Vegetation removal and other activities shall be timed to avoid the nesting season for special-status bird species that may be present. The nesting cycle for most birds in this region spans March 15 through September 30. **Preconstruction Measures**: Preconstruction breeding season surveys shall be conducted during the general nesting period, which encompasses the period from March 15 through September 30, if the final design of the project (including East Ravine investigation Sites I, K and L) could result in disturbance or loss of active nests of special-status bird species. If vegetation removal or other disturbance related to project implementation is required during the nesting season, focused surveys for active nests of special-status birds shall be conducted before such activities begin. A qualified biologist shall conduct preconstruction surveys to identify active nests that could be affected. The appropriate area to be surveyed and the timing of the survey may vary depending on the activity and species that could be affected. For the Yuma clapper rail, the preconstruction surveys shall specifically identify habitat within 300 feet of construction areas, in accordance with substantive policies of USFWS including those set out in USFWS protocols. **Construction Measures**: Before the initiation of project elements that could result in disturbance of active nests or nesting pairs of other special-status birds, a qualified biologist shall be consulted to identify appropriate measures to minimize adverse impacts during the construction phase of the project. If deemed appropriate for the final project design because of the potential for impacts, minimization measures will include focusing construction activities that must be conducted during the nesting season to less- sensitive periods in the nesting cycle, implementing buffers around	Avoidance and Minimization Plan; Construction/Remedial Action Work Plan; Plan for Decommissioning and Removal of IM-3 Facility and Site Restoration (part of CIMP); Plan for Decommissioning of Remedy Facilities and Restoration	A qualified biologist will coordinate to ensure that the footprints of project elements and construction zones, staging areas, and access routes are designed to avoid direct or indirect effects on habitat and nesting habitat for other special-status species, to the extent feasible, at the intermediate (60%) stage. An Avoidance and Minimization Plan for special-status birds will be developed in consultation with the USFWS, and is subject to agreement from DTSC.	The Yuma clapper rail/California black rail surveys consist of six focused surveys between March 14 and May 19, 2012. The southwestern willow flycatcher (SWFL) surveys were conducted May 21 through 25 and June 4 through 8; June 18 through 22; and June 26 through 30, 2012. The 2012 SWFL survey report was submitted to BLM and USFWS on January 31, 2013 (CH2M HILL 2013a). The results of the Yuma clapper rail/California black rail survey will be summarized in a forthcoming report. An Avoidance and Minimization Plan for special status birds is under preparation, in consultation with the USFWS.	PG&E submitted the Final Bird Impact Avoidance and Minimization Plan (CH2M HILL 2014d), which addresses minimization and avoidance of disturbance of special-status birds and loss of their habitat in the Topock remediation project area, on April 30, 2014. The plan is also included as an appendix of the Construction/Remedial Action Work Plan. Results of the 2012 Yuma clapper rail/California black rail survey were summarized in a report titled *2012 Focused Survey for the Yuma clapper rail and the California black rail at the PG&E Groundwater Remediation Project Site, Needles, California* (CH2M HILL 2013g). The SWFL surveys were conducted on May 20-23, June 3-6; June 16-19; July 1-3, and July 15-17, 2014. Surveys for the western yellow-billed cuckoo were conducted June 16-17; July 2-3; July 16-17; and August 6-8, 2014.	Additional western yellow-billed cuckoo (WYBC) surveys were conducted on June 23-25, July 7-9, July 20-23 and August 4-6, 2015. On June 24-25, 2015, in conformance with direction from DTSC, PG&E conducted biological surveys (including general surveys for wildlife, including surveys for special status birds and their habitat) of an additional 35-acre area on the west side of Moabi Regional Park. The survey results were summarized in a technical memorandum titled *Assessment of Biological Resources for a 35-acre Area on the West Side of Moabi Regional Park* (CH2M HILL 2015d). This memorandum provides updates to the January 2015 memorandum as well as information on the natural resources observed within the larger 35-acre area, and is also included in Appendix A10 of this report.	The Final Bird Impact Avoidance and Minimization Plan (CH2M HILL 2014d) was submitted on April 30, 2014. The C/RAWP was submitted on November 18, 2015. The Revised IM-3 Decommissioning Plan was included in the C/RAWP as Appendix F and as part of the CIMP in Appendix H. The 2014 Southwestern Willow Flycatcher Presence/Absence Surveys for the PG&E Topock Compressor Station report was submitted on October 29, 2014. The 2014 Western Yellow-Billed Cuckoo Presence/Absence Surveys for the PG&E Topock Compressor Station report was submitted on December 22, 2014.

TABLE L1.1-1
Summary of Compliance with EIR Mitigation Measures
Groundwater Remedy Basis of Design Report/Final (100%) Design
PG&E Topock Compressor Station, Needles, California

Resources	Mitigation Number	Mitigation Measure	Which document(s) will contain or satisfy this measure?[1]	Action (Compliance Status)				Date Completed
				Preliminary (30%) Design	Intermediate (60%) Design	Pre-Final (90%)/Supplemental 90% Design	Final (100%) Design	
		active nests of special-status birds to the extent practical and feasible to limit visual and noise disturbance, conducting worker awareness training, and conducting biological monitoring (including noise monitoring to determine if construction noise at the edge of suitable nesting habitat is elevated above 60 dBA Leq or ambient levels). An avoidance and minimization plan for special status bird species, as defined in Table 4.3-3 of the EIR and those species protected under the federal Migratory Bird Treaty Act, including the Yuma clapper rail, shall be developed and implemented in consultation with USFWS, and agreed upon by DTSC. Avoidance and impact minimization measures, such as prohibiting construction near or in sensitive bird habitat, limiting construction during breeding seasons, and requiring an on-site biological monitor, shall be included in the design plan and implemented to the extent necessary to avoid significant impacts on sensitive bird species.						

TABLE L1.1-1
Summary of Compliance with EIR Mitigation Measures
Groundwater Remedy Basis of Design Report/Final (100%) Design
PG&E Topock Compressor Station, Needles, California

Resources	Mitigation Number	Mitigation Measure	Which document(s) will contain or satisfy this measure?[1]	Action (Compliance Status)				Date Completed
				Preliminary (30%) Design	Intermediate (60%) Design	Pre-Final (90%)/Supplemental 90% Design	Final (100%) Design	
Biological Resources	BIO-2b	**Disturbance of Desert Tortoise and Loss of Habitat.** **Preconstruction Measures:** In areas where impacts to potential desert tortoise habitat are unavoidable, measures outlined in the Programmatic Biological Assessment (PBA) and in the USFWS letter concurring with the PBA, shall be implemented, as described below. To the extent feasible, project construction shall be designed to minimize removal of habitat for the desert tortoise. Before any ground-disturbing project activities begin, and except within the East Ravine for which potential effects to the tortoise have been considered per the PBA), a USFWS-authorized desert tortoise biologist shall identify potential desert tortoise habitat in areas that could be affected by the final project design. Through coordination with the authorized biologist, PG&E shall ensure that the footprints of project elements and construction zones, staging areas, and access routes are designed to avoid direct or indirect effects on potential desert tortoise habitat to the extent feasible. These measures include the presence of a USFWS-authorized desert tortoise biologist onsite or designated agent in accordance with the PBA who will examine work areas and vehicles for the presence of desert tortoises, and who will conduct preconstruction desert tortoise surveys in areas where unavoidable impacts to tortoise habitat would occur. If feasible, the preconstruction desert tortoise surveys would coincide with one of the two peak periods of desert tortoise activity (i.e., if feasible, the surveys should be conducted in either the period from April through May, or from September through October). The preconstruction surveys shall be in full accordance with the substantive requirements of USFWS protocols. **Construction Measures**: Before the initiation of project elements that could result in disturbance of desert tortoises or desert tortoise habitat, a USFWS-authorized desert tortoise biologist shall be consulted to identify appropriate measures to minimize adverse impacts. Minimization measures are likely to include micro-siting structures, pipelines, and access roads in previously disturbed areas or in areas with sparse scrub vegetation, conducting worker awareness	Construction/Remedial Action Work Plan; Plan for Decommissioning and Removal of IM-3 Facility and Site Restoration (part of CIMP); Plan for Decommissioning of Remedy Facilities and Restoration	PG&E, USFWS, and DOI are coordinating on the PBA for the final groundwater remedy. Goal is to complete the PBA in time for the completion of ESA Section 7 consultation prior to the approval of the Construction/Remedial Action Work Plan. Measures outlined in the forthcoming PBA and associated USFWS determination letter will be implemented before and during construction activities.	On September 25, 2012, the USFWS authorized two biologists, Melanie Day and Gabriel Valdes, to conduct activities described in this mitigation measure, pursuant to the PG&E Topock groundwater remediation project. Specifically, these two authorized biologists may survey, provide work area and vehicles inspection, and direct (pre)construction activities to avoid impacts on desert tortoise or their potential habitat, and to provide worker's awareness training for the groundwater remediation project. Gabriel Valdes identified the potential desert tortoise habitat shown in Figure 2.4-10 in the 60% BOD Report. Through coordination with the biologists (Gabriel Valdes and Melanie Day), the footprints of remediation wells, monitoring wells, piping, electrical transformers, access routes and pathways have been designed to avoid direct and indirect effects on potential desert tortoise habitat. PG&E, USFWS, and DOI continue to coordinate on the PBA for the final groundwater remedy. The goal is to complete the PBA in time for the completion of ESA Section 7 consultation prior to the approval of the Construction/Remedial Action Work Plan. Measures outlined in the forthcoming PBA and associated USFWS determination letter will be implemented before and during construction activities.	On April 1-2 and May 12-13, 2013, USFWS authorized biologist Gabriel Valdes conducted additional protocol surveys for desert tortoise in support of the design including the freshwater supply sites. Gabriel Valdes identified the potential desert tortoise habitat shown in Figure 2.4-10 in the 90% BOD Report. Through coordination with the biologists, the footprints of remediation wells, monitoring wells, piping, electrical transformers, access routes and pathways have been designed to avoid direct and indirect effects on potential desert tortoise habitat. PG&E, USFWS, BLM, and DOI coordinated on the PBA for the final groundwater remedy. This ESA Section 7 consultation was concluded with receipt of USFWS concurrency letter on July 7, 2014 which preceded the approval of the Construction/Remedial Action Work Plan. Measures outlined in the PBA and associated USFWS determination letter will be implemented before and during construction activities.	On January 29, 2015, another USFWS-approved biologist William Lee of Transcon Environmental, Inc. conducted a non-protocol survey for desert tortoise for proposed groundwater remedy activities around the Compressor Station Evaporation Ponds and access roadway. On June 24-25, 2015, in conformance with direction from DTSC, PG&E conducted biological surveys (including non-protocol surveys for desert tortoise) in an additional 35-acre area on the west side of Moabi Regional Park. Survey results were summarized in a technical memorandum titled *Assessment of Biological Resources for a 35-acre Area on the West Side of Moabi Regional Park* (CH2M HILL 2015d), which is included in Appendix A10 of this report.	The federal Endangered Species Act (ESA) Section 7 consultation on the PBA was concluded with receipt of USFWS concurrence letter on July 7, 2014 (USFWS 2014). The C/RAWP was submitted on November 18, 2015. The revised IM-3 Decommissioning Plan was included in the C/RAWP as Appendix F and as part of the CIMP in Appendix H. The *Assessment of Biological Resources for a 35-acre Area on the West Side of Moabi Regional Park: Final Groundwater Remedy, Topock Compressor Station, California* was completed on September 8, 2015.

TABLE L1.1-1
Summary of Compliance with EIR Mitigation Measures
Groundwater Remedy Basis of Design Report/Final (100%) Design
PG&E Topock Compressor Station, Needles, California

Resources	Mitigation Number	Mitigation Measure	Which document(s) will contain or satisfy this measure?[1]	Action (Compliance Status)				Date Completed
				Preliminary (30%) Design	Intermediate (60%) Design	Pre-Final (90%)/Supplemental 90% Design	Final (100%) Design	
Biological Resources	BIO-2c	**Disturbance of Special-Status Species and Loss of Habitat Caused by Decommissioning.** To avoid impacts on special-status species that may occur within the project area as a result of decommissioning activities, an avoidance and minimization plan shall be developed and implemented through consultation with CDFW, BLM, and USFWS. These measures shall be based on surveys conducted prior to decommissioning, and during the breeding season (as previously defined in this EIR for each species or suite of species). Restoration of any disturbed areas shall include measures to achieve no net loss of habitat functions and values existing before project implementation. These measures shall be achieved by developing and implementing a habitat restoration plan submitted to CDFW, BLM, and USFWS that is agreeable to these agencies. The plan shall include a revegetation seed mix or plantings design, a site grading concept plan, success criteria for restoration, a monitoring plan for achieving no net loss of habitat values and functions, and an adaptive management plan.	Avoidance and Minimization Plan	During planning of the IM-3 Decommissioning and Site Restoration Plan, an Avoidance and Minimization Plan and a Habitat Restoration Plan will be developed and implemented through consultation with CDFW, BLM, and USFWS.	The IM-3 Decommissioning Work Plan will describe the general procedures for restoration of the land and habitats. The Avoidance and Minimization Plan and Habitat Restoration Plan associated with decommissioning activities will be based on surveys conducted prior to decommissioning, and during the breeding season; therefore these Plans will be prepared in the future, prior to decommissioning (note that PG&E will prepare a separate Habitat Restoration Plan in compliance with the Consent Decree; this Plan will be developed in coordination with the USFWS Havasu National Wildlife Refuge (HNWR) Manager and submitted with the Construction/Remedial Action Work Plan).	<u>Avoidance and Minimization Associated with Decommissioning of IM-3 Facilities and Site Restoration:</u> A detailed Avoidance and Minimization Plan to minimize disturbance to special status species and their habitats associated with the decommissioning of IM-3 facilities will be developed based on surveys conducted prior to decommissioning, and during the breeding seasons closest to the start date of decommissioning; therefore, this Plan will be prepared in the future, prior to decommissioning. <u>Avoidance and Minimization Associated with Decommissioning of Remedial Facilities and Site Restoration:</u> In compliance with this mitigation measure, a detailed Avoidance and Minimization Plan to minimize disturbance to special status species and their habitats associated with decommissioning of remedial facilities will be developed based on surveys conducted prior to decommissioning, and during the breeding seasons closest to the start date of decommissioning; therefore, this Plan will be prepared in the future, prior to decommissioning. General procedures and protocols for restoring the environment to its preconstruction conditions upon decommissioning of remedial facilities were developed and are included as part of the CIMP (CUL-1a-8e). Also in compliance with the CD, a separate Habitat Restoration Plan for the Refuge was prepared and included as an appendix of the Construction/Remedial Action Work Plan.	<u>Avoidance and Minimization Associated with Decommissioning of IM-3 Facilities and Site Restoration:</u> A detailed Avoidance and Minimization Plan to minimize disturbance to special status species and their habitats associated with the decommissioning of IM-3 facilities will be developed based on surveys conducted prior to decommissioning, and during the breeding seasons closest to the start date of decommissioning; therefore, this Plan will be prepared in the future, prior to decommissioning, when the data necessary to complete the Plan can be collected. <u>Avoidance and Minimization Associated with Decommissioning of Remedial Facilities and Site Restoration:</u> In compliance with this mitigation measure, a detailed Avoidance and Minimization Plan to minimize disturbance to special status species and their habitats associated with decommissioning of remedial facilities will be developed based on surveys conducted prior to decommissioning, and during the breeding seasons closest to the start date of decommissioning; this Plan will also be prepared in the future, prior to decommissioning, when the data necessary to complete the Plan can be collected. General procedures and protocols for restoring the environment to its preconstruction conditions upon decommissioning of remedial facilities were developed and are included in the Cultural Impact Mitigation Program Section 2.5 (see also CUL-1a-8e), which is included in Appendix H of the Construction/Remedial Action Work Plan. In compliance with the CD, a separate Habitat Restoration Plan for the Refuge was prepared and included in Appendix G of the Construction/ Remedial Action Work Plan.	The CIMP and the Habitat Restoration Plan for the Refuge are included in Appendices H and G of the C/RAWP, respectively. The C/RAWP was submitted concurrently with the final design on November 18, 2015.

TABLE L1.1-1
Summary of Compliance with EIR Mitigation Measures
Groundwater Remedy Basis of Design Report/Final (100%) Design
PG&E Topock Compressor Station, Needles, California

Resources	Mitigation Number	Mitigation Measure	Which document(s) will contain or satisfy this measure?[1]	Action (Compliance Status)				Date Completed
				Preliminary (30%) Design	Intermediate (60%) Design	Pre-Final (90%)/Supplemental 90% Design	Final (100%) Design	
Biological Resources	BIO-3a	**Potential Impacts to Aquatic Habitat Related to Turbidity, Erosion, Sedimentation, and Overall Water Quality during Construction of the Intake Structure.** Hydrology & Water Quality Mitigation Measure HYDRO-1 shall be implemented in order to reduce water quality impacts related to erosion and pollutant runoff through implementation of BMPs. In addition, installing the cofferdam and dewatering a portion of the proposed intake structure site during fish screen construction may result in fish stranding. PG&E and its contractor shall coordinate with a qualified fisheries biologist to develop and implement a fish rescue plan. The fish rescue effort would be implemented during the dewatering of the area behind the cofferdam and would involve capturing those fish and returning them to suitable habitat within the river. The fish rescue plan shall identify and describe the following items: collection permits needed, fish capture zones, staffing, staging areas, fish collection and transport methods, species prioritization, resource agency contacts, fish handling protocols, fish relocation zones, site layout and progression of dewatering and fish rescue, and records and data. To ensure compliance, a fisheries biologist shall be present on-site during initial pumping (dewatering) activities and to oversee the fish rescue operation.		No further action is required. The preliminary (30%) design does not include a river water intake structure.	In response to comments on the 30% design submittals, PG&E prepared a technical memorandum to present additional details on three freshwater sources (groundwater from California, groundwater from Arizona, and Colorado River water). No further action is required. The intermediate (60%) design does not include a river water intake structure.	No further action is required. The pre-final (90%) design does not include a river water intake structure.	No further action is required. A river water intake is no longer considered as a potential source of fresh water for the remedy.	
Biological Resources	BIO-3b	**Potential Loss or Degradation of Aquatic Habitat.** To restore, replace, or rehabilitate habitat impacted by the intake structure, PG&E shall implement the measures described below. Unless as provided below, PG&E shall confer with CDFW regarding potential disturbance to fish habitat and shall obtain a streambed alteration agreement, pursuant to Section 1602 of the California Fish and Game Code, for construction work associated with intake structure construction; PG&E shall also confer with CDFW pursuant to the California Endangered Species Act (CESA) regarding potential impacts related to the loss of habitat or other operational impacts on state-listed fish species, respectively. PG&E shall comply with all requirements of the streambed alteration agreement and any CESA permits to protect fish or fish habitat or to restore, replace, or rehabilitate any important habitat on a "no-net-loss" basis. Alternatively, if CDFW declines to assert jurisdiction because it determines that CERCLA Section 121(e)(1) applies, the project proponent shall consult with CDFW regarding potential disturbance to fish habitat and shall meet the substantive policies of a streambed alteration agreement and of the CESA for construction work associated with intake structure		No further action is required. The preliminary (30%) design does not include a river water intake structure.	In response to comments on the 30% design submittals, PG&E prepared a technical memorandum to present additional details on three freshwater sources (groundwater from California, groundwater from Arizona, and Colorado River water). No further action is required. The intermediate (60%) design does not include a river water intake structure.	No further action is required. The pre-final (90%) design does not include a river water intake structure.	No further action is required. A river water intake is no longer considered as a potential source of fresh water for the remedy.	

TABLE L1.1-1
Summary of Compliance with EIR Mitigation Measures
Groundwater Remedy Basis of Design Report/Final (100%) Design
PG&E Topock Compressor Station, Needles, California

Resources	Mitigation Number	Mitigation Measure	Which document(s) will contain or satisfy this measure?[1]	Action (Compliance Status)				Date Completed
				Preliminary (30%) Design	Intermediate (60%) Design	Pre-Final (90%)/Supplemental 90% Design	Final (100%) Design	
		construction and operations. PG&E shall comply with all substantive requirements of the streambed alteration agreement and CESA to protect fish and fish habitat or to restore, replace, or rehabilitate any important habitat on a "no-net-loss" basis and to operate the facility in accordance with CESA to ensure no net loss of habitat function.						
Biological Resources	BIO-3b	Additionally, PG&E shall consult with USACE regarding the need to obtain permits under section 404 of the CWA and section 10 of the Rivers and Harbors Act. In conjunction with these permitting activities, the USACE must initiate consultation with USFWS under Section 7 of the federal ESA regarding potential impacts of the proposed project on federally listed fish species due to the loss of habitat on federally listed fish species. PG&E shall implement any additional measures developed through the ESA Section 7 processes, or its equivalent, to ensure "no-net loss" of habitat function. Alternatively, if USACE and/or USFWS decline to assert jurisdiction because it determines that CERCLA Section 121(e)(1) applies, PG&E shall confer with USFWS regarding potential disturbance to federally listed fish species and federally listed fish species habitat and shall meet the substantive mandates under Section 7 of the federal ESA regarding potential impacts to fish or to habitat of federally listed fish species. PG&E shall implement any additional measures developed through that processes, including compliance with the substantive requirements of all of what would be permit conditions if not exempt pursuant to CERCLA, and to ensure "no-net-loss" of habitat function. Because the type and extent of habitat potentially affected is unknown, PG&E shall have an instream habitat typing survey conducted in the area potentially affected by the intake construction. Further, cooperation with USFWS and other fisheries biologists shall determine suitable and acceptable location(s) for the intake structure(s) to avoid the spawning habitat of special-status fish species. PG&E shall avoid habitat modifications, especially to habitat that is preferred by native fishes for spawning or rearing including side channels, cobble or gravel bars, and shallow backwaters. If these habitat types cannot be avoided, any disturbed habitat will be restored or replaced to achieve "no-net-loss" of habitat types and values as described above.	Instream Habitat Typing Survey Report	No further action is required. The preliminary (30%) design does not include a river water intake structure.	In response to comments on the 30% design submittals, PG&E prepared a technical memorandum to present additional details on three freshwater sources (groundwater from California, groundwater from Arizona, and Colorado River water). As part of the preparation of the technical memorandum, an instream habitat survey was conducted on April 4, 2012 to determine the preferred locations for spawning and rearing of the razorback sucker and bonytail chub. Survey results were presented in a technical memorandum entitled *Instream Habitat Typing Survey, Topock Compressor Station, Colorado River* (CH2M HILL 2012a). The report was provided to DTSC on May 25, 2012, and is included in Appendix A6 of this BOD report.	No further action is required. The pre-final (90%) design does not include a river water intake structure.	No further action is required. A river water intake is no longer considered as a potential source of fresh water for the remedy.	The Instream Habitat Typing Survey Technical Memorandum (CH2M HILL 2012a) was completed on May 25, 2012.

TABLE L1.1-1
Summary of Compliance with EIR Mitigation Measures
Groundwater Remedy Basis of Design Report/Final (100%) Design
PG&E Topock Compressor Station, Needles, California

Resources	Mitigation Number	Mitigation Measure	Which document(s) will contain or satisfy this measure?[1]	Action (Compliance Status)				Date Completed
				Preliminary (30%) Design	Intermediate (60%) Design	Pre-Final (90%)/Supplemental 90% Design	Final (100%) Design	
Biological Resources	BIO-3c	**Potential Fish Entrainment and Impingement during Operation of the Intake Structure.** Both screened and unscreened diversions can entrain larval life stages of fish. For example, adverse effects to early life stages of fish could occur if diversions coincide with planktonic larval life stages that occur during summer months, a period of high entrainment vulnerability. Prior to operation of the intake structure, PG&E shall consult with USFWS and CDFW to determine the most vulnerable time of the year for entrainment or impingement of razorback sucker and bonytail chub eggs or larvae. PG&E shall install a state-of-the-art positive-barrier fish screen that would minimize fish entrainment and impingement at the intake structure. The fish screen shall be designed in accordance with CDFW and the National Marine Fisheries Service criteria, with specific consideration given to minimizing harm to fish eggs and other early life stages. To ensure that the fish screen operates as intended and reduce the risk of impacts, long-term monitoring of the operations and maintenance of the positive-barrier screen shall be conducted. Monitoring at the onset of diversions through the intake shall include approach velocity measurements immediately after the positive-barrier screen operations begin, with fine-tuning of velocity control baffles or other modifications as necessary, to achieve uniform velocities in conformance with the screen criteria established by regulatory agencies.		No further action is required. The preliminary (30%) design does not include a river water intake structure.	In response to comments on the 30% design submittals, PG&E prepared a technical memorandum to present additional details on three freshwater sources (groundwater from California, groundwater from Arizona, and Colorado River water). No further action is required. The intermediate (60%) design does not include a river water intake structure.	No further action is required. The pre-final (90%) design does not include a river water intake structure.	No further action is required. A river water intake is no longer considered as a potential source of fresh water for the remedy.	

TABLE L1.1-1
Summary of Compliance with EIR Mitigation Measures
Groundwater Remedy Basis of Design Report/Final (100%) Design
PG&E Topock Compressor Station, Needles, California

Resources	Mitigation Number	Mitigation Measure	Which document(s) will contain or satisfy this measure?[1]	Action (Compliance Status)				Date Completed
				Preliminary (30%) Design	Intermediate (60%) Design	Pre-Final (90%)/Supplemental 90% Design	Final (100%) Design	
Cultural Resources	CUL-1a	**During Design, Construction, O&M, and Decommissioning Implement Measures to Avoid, Minimize, or Mitigate Impacts on Cultural Resources.** Establishment of a cultural impact mitigation program and a Corrective Measures Implementation Workplan (CMI Workplan), with specific activities stipulated for each phase of the project, will reduce the potential for impacts on historical resources within the project area, and will help preserve the values of and access to the Topock Cultural Area for local Tribal users. As detailed below, measures will be implemented to avoid known resources, re-use existing disturbed areas to the extent feasible, allow for Tribal input to the final design and maintain access for Tribal users during design, construction, operation, and decommissioning activities, as appropriate. During construction, a Worker Education Program and regular archaeological and Tribal monitoring will be implemented, and measures intended to reduce the potential for incursion by outside parties will be strengthened. This measure does not apply to the activities included as part of the East Ravine Revised Addendum, Groundwater Investigation (dated December 31, 2010).	Corrective Measure Implementation Work Plan (CMI) and Cultural Impact Mitigation Program (CIMP)	The Corrective Measure Implementation Work Plan (CMI Work Plan) was completed in November 2011. Work on the Cultural Impact Mitigation Program (CIMP) commenced in May 2011, the CIMP will be submitted with the final design (due 2012) as directed.	Work on the CIMP commenced in May 2011, and the CIMP will be submitted with the 90% design (due late 2013).	PG&E started work on the CIMP in May 2011, in coordination with Interested Tribes during face- to-face meetings or teleconference calls held once per month. On July 8, 2013, PG&E provided a preliminary draft CIMP (including the IM-3 Decommissioning Plan) to Interested Tribes. Tribes provided comments on the draft CIMP in October 2013. PG&E reviewed and discussed select comments and responses with the Tribes during the March and April 2014 Tribal Monthly Updates (TMUs). At DTSC's and Tribes' request, the CIMP (PG&E 2014) was submitted on May 1, 2014, in advance of the 90% design (see paragraph below for submittal dates related to the IM-3 Decommissioning Plan). PG&E incorporated select Tribes' comments in the May 1, 2014 CIMP, and sent Tribes a letter to explain why certain comments were not incorporated. <u>IM-3 Decommissioning Plan (Appendix B of CIMP)</u> A preliminary draft IM-3 Decommissioning Plan was submitted to the Fort Mojave Indian Tribe (FMIT) in April 2013. The FMIT provided comments on the preliminary draft Plan in June 2013. PG&E updated the draft Plan and submitted it to Interested Tribes as an appendix to the CIMP on July 8, 2013. The FMIT and the Hualapai Tribe provided comments on the updated Plan in October 2013. PG&E sent letters to respond to the Tribes' comments on July 8, 2014 and discussed the responses during the July TMU. PG&E incorporated select Tribes' comments and submitted a revised Plan with the 90% design on September 8, 2014.	Minor editorial updates (e.g., change 90% to final design) were made to the CIMP (PG&E 2015). The updated CIMP was included in Appendix H to the C/RAWP, which is submitted concurrently with the final design.	The Revised Groundwater CMI/RD Work Plan (CH2M HILL 2011a) was completed on November 2, 2011. The Cultural Impact Mitigation Program was included in Appendix H to the C/RAWP, which is submitted concurrently with the final design on November 18, 2015.

TABLE L1.1-1
Summary of Compliance with EIR Mitigation Measures
Groundwater Remedy Basis of Design Report/Final (100%) Design
PG&E Topock Compressor Station, Needles, California

Resources	Mitigation Number	Mitigation Measure	Which document(s) will contain or satisfy this measure?[1]	Action (Compliance Status)				Date Completed
				Preliminary (30%) Design	Intermediate (60%) Design	Pre-Final (90%)/Supplemental 90% Design	Final (100%) Design	
Cultural Resources	CUL-1a-1	During development of the final design and the construction, operation, and decommissioning phases of the project, PG&E shall carry out and require all subcontractors to carry out all investigative, testing, and remediation activities, including all supporting operations and maintenance activities, in ways that avoid, minimize, and mitigate significant adverse effects to historically significant cultural and historic resources, consistent with the CEQA Guidelines, and including the Topock Cultural Area, to the maximum extent feasible as determined by DTSC.	Training material for cultural resources	Implementation of this measure will be carried out in a manner that respects cultural and historic resources, to the maximum extent feasible as determined by DTSC.	PG&E remediation resources specialist Glenn Caruso participated in field reviews of planned remedial facilities with the design team on April 23-24 and June 20, 2012. The purpose of these field reviews along with in-office reviews is to ensure that the footprints of planned facilities are designed in ways that avoid, minimize, and mitigate significant adverse effects to historically significant cultural and historic resources.	PG&E Cultural Resources Expert Glenn Caruso participated in field reviews of planned remedial facilities and construction footprints with the design team on April 7-10, 2014. He also led in-office reviews of locations of planned facilities and construction footprints. The purpose of these field reviews along with in-office reviews is to ensure that the footprints of planned facilities are designed in ways that avoid, minimize, and mitigate significant adverse effects to historically significant cultural and historic resources.	PG&E Cultural Resources Expert Glenn Caruso participated in field review of planned remedial facilities and temporary construction footprints at Moabi Regional Park in late 2014 and early 2015. Glenn Caruso also led in-office review of planned facilities and temporary construction-related footprints in September 2015. The purpose of the field review along with in-office reviews is to ensure that project footprints are designed in ways to avoid and minimize impacts on cultural and historical resources, consistent with the CEQA Guidelines, to the maximum extent feasible.	
Cultural Resources	CUL-1a-2	As part of the CMI Workplan, PG&E shall develop a written access plan to preserve Tribal members' access to, and use of, the project area for religious, spiritual, or other cultural purposes. This plan will allow access to the extent PG&E has the authority to facilitate such access, and be consistent with existing laws, regulations, and agreements governing property within the project area. The access plan may place restrictions on access into certain areas, such as the Compressor Station and the existing evaporation ponds, subject to DTSC review with regard to health and safety concerns and to ensure noninterference with approved remediation activities. This access plan may be developed in coordination with the federal agencies with land management responsibilities in the project area (e.g., BLM and USFWS) in accordance with the related stipulation (General Principle I.C) contained in the Programmatic Agreement (Appendix PA). PG&E shall demonstrate a good faith effort to coordinate with Interested Tribes[1] by including communication logs as part of the CMI Workplan. [1]*"Interested Tribes" means, for purposes of this EIR and the mitigation measures contained herein, the six Tribes that have substantially participated in the various administrative processes surrounding remediation of the site with DTSC, PG&E, and DOI, including throughout development of the final remedy. Interested Tribes include the Chemehuevi Indian Tribe, Cocopah Indian Tribe, Colorado River Indian Tribes, Fort Mojave Indian Tribe, Fort Yuma-Quechan Indian Tribe, and Hualapai Indian Tribe.*	Access Plan; Communication Log with Tribes (part of the EIR mitigation measure compliance reports)	In its June 17, 2011 comment on the Draft CMI Work Plan, DTSC stated that "Although DTSC specified that the site access and security plan are to be developed as part of the CMI Work Plan, DTSC acknowledges that the full scope of the plan cannot be accomplished without completion of the design. Therefore, DTSC agrees that PG&E can provide conceptual ideas within the CMI Work Plan for the development of a detailed plan as part of the final design." At the time of this writing, PG&E has been in contact with the BLM who has responsibility for preparing the Access Plan required by the PA. BLM has indicated that they are planning to complete their Access Plan by Fall 2011. Given the majority of land within the area is federal land, PG&E is waiting for BLM to complete their Access Plan in order to avoid the potential for inconsistencies. PG&E will then prepare an Access Plans for the lands not under federal management, for submittal with the final design (target late 2012).	PG&E has initiated work on an Access Plan for the lands not under federal management, taking into consideration the information in the BLM Access Plan, for submittal with the final design (target 2013). Communication logs with Tribes are submitted to DTSC quarterly as part of the quarterly EIR mitigation measures compliance reports (see Table 6.1-2 in the 60% BOD Report)	On October 21, 2013, PG&E provided the Tribes a draft of the Access Plan for lands not under federal management for review and comment. Tribal comments were received on November 22, 2013. PG&E has updated and discussed the plan at the July 24, 2014 TMU. The Access Plan is included as an appendix of the Construction/ Remedial Action Work Plan. Communication logs with Tribes are submitted to DTSC quarterly as part of the quarterly EIR mitigation measures compliance reports (the last quarterly report was submitted on July 31, 2014; the next quarterly report is due October 31, 2014).	The Access Plan to preserve Tribal members' access to and use of the project area for religious, spiritual, and other cultural purposes is included as an appendix of the Construction/Remedial Action Work Plan, which was submitted concurrently with the final design documents. Communication logs documenting efforts to coordinate with Tribes on the Access Plan have been submitted to DTSC quarterly as part of the quarterly EIR mitigation measures compliance reports.	The Access Plan is included in Appendix P (Cultural Resources Protocols) of the Construction/ Remedial Action Work Plan, which is submitted concurrently with the final design documents on November 18, 2015. Communication logs with Tribes are submitted to DTSC quarterly as part of the quarterly EIR mitigation measures compliance reports.

TABLE L1.1-1
Summary of Compliance with EIR Mitigation Measures
Groundwater Remedy Basis of Design Report/Final (100%) Design
PG&E Topock Compressor Station, Needles, California

Resources	Mitigation Number	Mitigation Measure	Which document(s) will contain or satisfy this measure?[1]	Action (Compliance Status)				Date Completed
				Preliminary (30%) Design	Intermediate (60%) Design	Pre-Final (90%)/Supplemental 90% Design	Final (100%) Design	
Cultural Resources	CUL-1a-3	PG&E shall enhance existing measures to prevent and reduce incursions from recreational and/or other outside users from affecting unique archeological and historically significant resources, including resources within the Topock Cultural Area, by:		This mitigation measure will be met through actions taken to comply with CUL-1a-3a through 3d (see below).	This mitigation measure will be met through actions taken to comply with CUL-1a-3a through 3d (see below).	This mitigation measure will be met through actions taken to comply with CUL-1a-3a through 3d (see below).	This mitigation measure will be met through actions taken to comply with CUL-1a-3a through 3d (see below).	See CUL-1a-3a and CUL-1a-3d.
Cultural Resources	CUL-1a-3a	a. Retaining a Qualified Cultural Resource Consultant to implement the Mitigation Monitoring and Reporting Program (MMRP) and conducting yearly inspections (or less frequently upon approval by DTSC) of identified historical resources, including inspections of the Topock Cultural Area, to determine if substantial adverse changes have occurred relative to the condition of the historical resources during the past year or prior to the implementation of the proposed project. PG&E shall offer to retain a Tribal monitor at historic rates of compensation or Tribal representatives designated by the Tribal Council or chairperson, if so requested, to accompany the Qualified Cultural Resources Consultant during the inspections. The Qualified Cultural Resource Consultant shall be a person who is acceptable to DTSC and who is also a qualified archaeologist with a graduate degree in archaeology, anthropology or closely related field, plus at least 3 years of full-time professional experience in general North American archaeological research and fieldwork, with expertise/experience in the Southwest preferred.	Annual cultural resources monitoring report	PG&E has retained qualified cultural resources consultants for implementation of the MMRP, subject to DTSC's approval.	On January 27, 2012, PG&E nominated Applied Earthworks, Inc. (AE) as the qualified cultural resource consultant for the groundwater remedy project and requested DTSC's consideration and approval of AE. On March 2, 2012, DTSC accepted PG&E's nomination and approved AE as the qualified cultural resource consultant for the groundwater remedy project. In 2012, the Annual Cultural Monitoring event was conducted November 5 through 7, 2012.	The 2013 annual report titled "*Topock Compressor Station Groundwater Remediation Project: Condition Assessments at Sixty-Nine Archaeological and Historical Sites"* (AE 2014a) was submitted to DTSC on March 12, 2014. On December 2, 2014, AE as PG&E's Qualified Cultural Resource Consultant conducted archaeological and historical field surveys of the locations considered for project features in Moabi Regional Park. A brief summary of the survey results was included in Appendix A11 of the Supplemental 90%.	The 2014 annual archaeological monitoring of the identified sites within the groundwater remedy project area was conducted December 11-19, 2014. The report was submitted to DTSC on March 2, 2015 (AE 2015). On June 24-26, 2015, PG&E conducted field surveys of the additional locations considered for remedy features in Moabi Regional Park. Survey results were summarized in a technical memorandum submitted on September 2, 2015.	DTSC accepted PG&E's nomination and approved AE as the qualified cultural resource consultant for the groundwater remedy project on March 2, 2012. PG&E has offered to retain Tribal monitors at historical rates of compensation.
Cultural Resources	CUL-1a-3b	b. Developing a site security plan as part of the CMI Workplan. The site security plan shall include, but not be limited to, instructions for PG&E personnel to inspect the project site routinely during construction and report any human-caused disturbance to project facilities and the surrounding environment to DTSC and the appropriate landowner, such as BLM, USFWS, or FMIT, as appropriate, depending on the ownership of the property involved in the incursion. Notification shall be within a specified period, as established in the site security plan for the event, and shall also be summarized as part of the periodic implementation status report, as approved by DTSC for remedy implementation. This measure does not impose any obligation on PG&E to perform law-enforcement duties on federal or private lands, but is intended to provide increased observation of potential intrusions into the project area during construction and operation of the final remedy that may impact significant cultural resources. PG&E staff, or assigned agents, should be instructed to report any outside disturbance to the environment personally observed over the course of the working day. Information shall be reported within a specific	Site security plan	In its June 17, 2011 comment on the Draft CMI Work Plan, DTSC stated that "Although DTSC specified that the site access and security plan are to be developed as part of the CMI Work Plan, DTSC acknowledges that the full scope of the plan cannot be accomplished without completion of the design. Therefore, DTSC agrees that PG&E can provide conceptual ideas within the CMI Work Plan for the development of a detailed plan as part of the final design." PG&E provided concepts of security provisions in the CMI Work Plan (Section 4.2.3). PG&E will prepare a site security plan for submittals as part of the final design (target late 2012).	Work on the site security plan has begun. The site security plan is planned for submittal as part of the 90% design (target late 2013).	A site security plan titled *"Groundwater Remedial Action Site Security Plan"* is included in an appendix of the Construction/ Remedial Action *Work Plan.* Also, PG&E will summarize any reports of human-caused disturbance to project facilities and the surrounding environment in the EIR mitigation monitoring compliance reports to be prepared quarterly during construction and annually during operations.	The Site Security Plan was revised in response to comments and included as Appendix Q of the Construction/ Remedial Action Work Plan. PG&E will summarize any reports of human-caused disturbance to project facilities and the surrounding environment in the EIR mitigation monitoring compliance reports to be prepared quarterly during construction and annually during operations.	A site security plan titled *Revised Groundwater Remedial Action Site Security Plan* is included in Appendix Q of the Construction/ Remedial Action Work Plan, which is submitted concurrently with the final design on November 18, 2015.

TABLE L1.1-1
Summary of Compliance with EIR Mitigation Measures
Groundwater Remedy Basis of Design Report/Final (100%) Design
PG&E Topock Compressor Station, Needles, California

Resources	Mitigation Number	Mitigation Measure	Which document(s) will contain or satisfy this measure?[1]	Action (Compliance Status)				Date Completed
				Preliminary (30%) Design	Intermediate (60%) Design	Pre-Final (90%)/Supplemental 90% Design	Final (100%) Design	
		period, as established in the site security plan, to DTSC and the appropriate landowners, such as BLM, USFWS, or FMIT, depending on the ownership of the property intruded upon. The site security plan may also include the use of PG&E security cameras at major ingress/egress gates into the project site. Finally, if requested by the FMIT the plan may include the use of private security personnel to patrol the FMIT-owned parcel within the project area to prevent outside incursions.						
Cultural Resources	CUL-1a-3c	c. Coordinating with BLM and San Bernardino County to facilitate an outreach effort to the staff at Moabi Regional Park, requesting that they communicate to visitors the parts of the project area that are off limits to off-road vehicle usage because of health and safety concerns, public lands management plans, or landowner requests. PG&E shall make a good faith effort to involve the surrounding Tribes in this outreach effort, providing Interested Tribes with the opportunity to comment on outreach materials or provide a Tribal cultural resources specialist the opportunity to participate in the outreach activities. As part of this outreach effort, PG&E shall work with Moabi Regional Park and offer to design, develop, and fund the installation of an informational kiosk within Moabi Regional Park that informs visitors of the work being done at the project site. PG&E shall involve the Tribes to the maximum extent feasible, as determined by DTSC, in the design and development of the informational kiosk.	Design submittals	PG&E is currently in the process of implementing this mitigation measure.	PG&E is currently in the process of implementing this mitigation measure and has discussed with Interested Tribes at the monthly meetings on November 22, 2011, December 22, 2011, January 26, 2012, and March 22, 2012. To date, Tribal inputs have been received for this measure. PG&E is coordinating with BLM and San Bernardino County on constructing an information kiosk within Moabi Regional Park and posting signage to communicate restrictions to off-road vehicle usage in part of the project area and inform visitors of the work being done at the site.	PG&E has prepared a protocol for a) outreach to Moabi Regional Park staff regarding communication to visitors about the restrictions for off-road vehicle use, and b) establishing an information kiosk. The protocol was included as an appendix of the Construction/Remedial Action Work Plan.	PG&E has prepared a protocol for outreach to Moabi Regional Park staff regarding communication to visitors about the restrictions for off-road vehicle use, and establishing an information kiosk. The protocol is included in Appendix P of the Construction/Remedial Action Work Plan, which is submitted concurrently with the final design. The protocol includes the requirement that PG&E communicate with the surrounding Tribes on the outreach materials, providing Interested Tribes the opportunity to comment on outreach materials.	A protocol was developed in compliance with this measure, and included in Appendix P of the Construction/Remedial Action Work Plan, which is submitted concurrently with the final design on November 18, 2015.
Cultural Resources	CUL-1a-3d	d. Posting signage to indicate those parts of the project area that are off limits to off-road vehicle usage due to possible health and safety concerns and to reduce potential damage to environmental resources. If agreed to by land owners and/or local, state, or federal management entities within the project area, PG&E shall work with the relevant land owner or land management entity to develop, design, and fund the installation of easily visible and clear signage. This may include coordination with BLM to install signage noting the designation of the area as an Area of Critical Environmental Concern owing to its biological and cultural resources, while ensuring that signs are placed in a way that does not draw unwanted attention to specific resources.	Design submittals	PG&E will seek to work with land owners and land management entities (BLM, the Refuge, USFWS) during the design so that the signage can be established prior to commencing construction activities; implementation of this measure may take longer, however, depending upon requirements of land owners and land management entities.	PG&E will seek to work with land owners and land management entities (BLM, the Refuge, USFWS) during the design so that the signage can be established prior to commencing construction activities; implementation of this measure may take longer, however, depending upon requirements of land owners and land management entities.	PG&E has prepared a protocol to establish signage to indicate areas that are off limits to off-road vehicle usage in coordination with BLM and other relevant landowners. The protocol was included as an appendix of the Construction/ Remedial Action Work Plan.	PG&E has prepared a protocol to establish signage to indicate areas that are off limits to off-road vehicle usage in coordination with BLM and other relevant landowners. The protocol was included in Appendix P of the Construction/Remedial Action Work Plan, which is submitted concurrently with the final design.	A protocol was developed in compliance with this measure, and included in Appendix P of the Construction/Remedial Action Work Plan is submitted concurrently with the final design on November 18, 2015.

TABLE L1.1-1
Summary of Compliance with EIR Mitigation Measures
Groundwater Remedy Basis of Design Report/Final (100%) Design
PG&E Topock Compressor Station, Needles, California

Resources	Mitigation Number	Mitigation Measure	Which document(s) will contain or satisfy this measure?[1]	Action (Compliance Status)				Date Completed
				Preliminary (30%) Design	Intermediate (60%) Design	Pre-Final (90%)/Supplemental 90% Design	Final (100%) Design	
Cultural Resources	CUL-1a-4	PG&E shall work with representative members of the Interested Tribes to convene and retain a multidisciplinary panel of independent scientific and engineering experts as part of a Technical Review Committee (TRC). The TRC shall be made up of not more than five multidisciplinary experts who will be on call to review project-related documents, participate in project-related meetings, and advise interested Tribal members on technical matters relating to the final design and remedy. The TRC shall include only persons with technical expertise, including but not limited to geology, hydrology, water quality, engineering, paleontology, toxicology, chemistry, biology, or botany. Before July 1, 2011, PG&E shall post an open grant or Request for Qualifications (RFQ) and retain members of the TRC at rates comparable to those paid historically to Tribal experts by PG&E for the remediation project. TRC members shall be selected by majority vote of one representative from each participating Interested Tribe. PG&E shall provide Interested Tribes at least 30-days' notice of the meeting to select TRC members and to review TRC candidate qualifications. For the purposes of contracting, the grant may be awarded to one Tribal government to manage or, alternatively, PG&E may reimburse the Tribe or TRC members directly. The entirety of the monies shall be used to fund the scientific and engineering team exclusively, and shall not be used to fund other Tribal government expenses or used to support legal counsel. A stipulation of the open grant shall be that the scientific and engineering team shall provide all deliverables and results to all involved Tribes, despite a possible contract agreement with only one Tribe or with PG&E. Upon conclusion of the construction phase of the project, the necessity and dollar value of the TRC shall be assessed by PG&E and, with the approval of DTSC, shall either be extended, reduced, or terminated under the operations and maintenance phase. An annual activity report shall be sent to DTSC for review and to ensure PG&E is in compliance.	EIR mitigation measures compliance reports (quarterly during design/ construction, annual during operation)	In compliance with this measure, PG&E posted a Request for Qualifications on several job boards, TRC members have been retained, and the TRC has been convened.	In March 2012, PG&E expanded the TRC scope to include review of documents related to the soil investigation at locations outside the Compressor Station. As directed by this measure, an annual activity report was submitted to DTSC on June 29, 2012. In addition, TRC activities are summarized and included in the quarterly EIR mitigation measures compliance reports.	As directed by this measure, the second annual activity report titled *"Annual Report Technical Review Committee Activities, Topock Compressor Station Groundwater Remediation Project, San Bernardino County, California"* (HDR 2013) was submitted on November 26, 2013. In addition, TRC activities are summarized and included in the quarterly EIR mitigation measures compliance reports (the last quarterly report was submitted on July 31, 2014; the next quarterly report is due October 31, 2014).	TRC activities are summarized and included in the quarterly EIR mitigation measures compliance reports. The 2014 annual TRC report was submitted in January 2015 (HDR 2015). PG&E continues to fund TRC members at rates comparable to those historically paid to Tribal experts by PG&E for the remediation project through an open grant. Upon conclusion of the construction phase of the project, the necessity and dollar value of the TRC will be assessed by PG&E and, with the approval of DTSC, shall either be extended, reduced, or terminated during the operations and maintenance phase.	The TRC was convened on July 1, 2011. The first annual activity report was submitted on June 29, 2012. The second annual activity report was submitted on November 26, 2013. The third annual activity report was submitted in January 2015.

TABLE L1.1-1
Summary of Compliance with EIR Mitigation Measures
Groundwater Remedy Basis of Design Report/Final (100%) Design
PG&E Topock Compressor Station, Needles, California

Resources	Mitigation Number	Mitigation Measure	Which document(s) will contain or satisfy this measure?[1]	Action (Compliance Status)				Date Completed
				Preliminary (30%) Design	Intermediate (60%) Design	Pre-Final (90%)/Supplemental 90% Design	Final (100%) Design	
Cultural Resources	CUL-1a-5	Should any indigenous plants of traditional cultural significance and listed in Appendix PLA of this FEIR be identified within the project area, PG&E shall avoid, protect, and encourage the natural regeneration of the identified plants when developing the remediation design, final restoration plan, and IM-3 decommission plan. In the event that impacts on the identified plants cannot be avoided and such plants will be displaced, PG&E shall retain a qualified botanist who shall prepare a plant transplantation/monitoring plan which can be included as part of the Cultural Impact Mitigation Program (CIMP) referenced in CUL-1a-8 either by (1) transplanting such indigenous plants to an on-site location, or (2) providing a 2:1 ratio replacement to another location decided upon between PG&E and members of the Interested Tribes. Plans to transplant or replace such plants shall be approved by DTSC. In coordination with the qualified botanist, PG&E shall monitor all replanted and replacement plants for at least 5 years, and shall ensure at least a 75 percent survivorship during that time. This mitigation measure is not meant to replace or subsume any actions required by state or federal entities with regard to the protection of species listed as rare, threatened, or endangered.	Mitigation and monitoring plan for culturally sensitive plants	A floristic survey was completed on November 1 through 8, 2011 to establish a comprehensive inventory of plant species that occur in the EIR project area, identify sensitive plants species and to comply with this mitigation measure, which requires PG&E to avoid, protect, and encourage the regeneration of ethnobotanically significant plants listed in Appendix PLA of the EIR. The survey methodology is summarized in a technical memorandum entitled "*Topock Groundwater Remediation Project, Floristic Survey Methodology*" (CH2M HILL 2011c) and is included in Appendix A3 of this Basis of Design Report. Another round of floristic survey will held in the Spring 2012, however, the exact timing of the survey will be determined by a qualified botanist. A map will be prepared to document the survey results.	A continuation of the Fall 2011 floristic survey was conducted from March 12 to 20, 2012. Additional floristic survey was conducted from March 12 through 14 2013. On March 29, 2013 PG&E submitted two reports related to plant surveys: a) The first report titled "Topock Groundwater Remediation Project Floristic Survey Report" summarizes the floristic survey results from 2011 and 2012; this report is included in Appendix A5 of this BOD report. Results from 2013 are planned to be included in the next design deliverable associated with the freshwater source details. b) The second report titled "Topock Groundwater Remediation Project Ethnobotany Survey Report" summarizes the survey results for ethnobotanically sensitive plants from 2011 and 2012; this report is included in Appendix A7 of this BOD report. Results from 2013 are planned to be included in the next design deliverable associated with the freshwater source details. In addition, PG&E is working with interested Tribes on the plant transplantation/monitoring plan required under this measure, as part of the CIMP.	A Revised Floristic Survey Report (CH2M HILL 2013h) summarizing survey results from 2011 through 2013, including freshwater supply sites, was submitted on December 30, 2013. The report is also included in Appendix A5 of the 90% BOD. A Revised Ethnobotany Survey Report (CH2M HILL 2014e) summarizing survey results from 2011 through 2013 was submitted on January 15, 2014. The report is also included in Appendix A7 of the 90% BOD. The *Supplemental Ethnobotanical Plant Surveys for the Pacific Gas and Electric Company's Topock Compressor Station, San Bernardino, California* report (CH2M HILL 2014f) summarizing the December 2013 Survey results was submitted on February 28, 2014. The supplemental report is also included in Appendix A7 of the 90% BOD. In compliance with this measure, a mitigation and monitoring plan for culturally sensitive plants was prepared and included as Appendix A of the CIMP. In support of the Supplemental 90% design, PG&E conducted biological surveys of the 6.74-acre Construction Headquarters and soil management area at Moabi Regional Park on November 19, 2014 to identify existing mature plant specimens and indigenous plants of traditional cultural significance. The survey results were summarized in a technical memorandum titled *Assessment of Biological Resources for the Proposed Soil Management Areas* (CH2M HILL 2015b); this memorandum provides general information of the flora and fauna observed in the areas added to the original project area, and also supplements information on the biological resources presented in prior project documents related to mature vegetation, ethnobotanical plants, and jurisdictional wetlands and waters. The technical	On January 30, 2015, PG&E conducted biological surveys (including indigenous plants of traditional cultural significance) of the area proposed for remedy use at Moabi Regional Park. On June 24-25, 2015, in conformance with direction from DTSC, PG&E conducted biological surveys (including indigenous plants of traditional cultural significance) of an additional 35-acre area on the west side of Moabi Regional Park. The survey results were summarized in a technical memorandum titled *Assessment of Biological Resources for a 35-acre Area on the West Side of Moabi Regional Park* (CH2M HILL 2015d). This memorandum provides updates to the January 2015 memorandum as well as information on the natural resources observed within the larger 35-acre area, and is also included in Appendix A10 of this report. In addition, a technical memorandum titled *Assessment of Biological Resources for the Proposed Sewer and Firewater Lines for the Construction Headquarters, Final Groundwater Remedy, Topock Compressor Station, California* (CH2M HILL 2015c) was prepared to provide a general assessment of biological and cultural resources (including indigenous plants of traditional cultural significance) that could be affected by the proposed sewer and fire water lines that may be installed in the future and are associated with the construction headquarters facilities that would be located to the west of Moabi Regional Park, south of the National Trails Highway. The memo was completed on August 5, 2015 and submitted for review during the 90% RTC process and is included in Appendix A10 of this report. The Preliminary Assessment of Proposed Mitigation Planting Areas for Final Groundwater Remedy Impacts, Topock Compressor Station, California was revised to incorporate	The survey methodology technical memorandum was completed on October 31, 2011, and provided to Interested Tribes on November 8, 2011. The revised Final Floristic Survey Report was completed on December 30, 2013. The revised Final Ethnobotany Survey Report was completed on January 15, 2014. A supplemental report was completed on February 28, 2014. A mitigation and monitoring plan for culturally sensitive plants was prepared and included as Appendix A of the CIMP. The Assessment of Biological Resources for the Proposed Soil Management Areas was completed on January 19, 2015, and submitted with the Supplemental 90% on February 5, 2015. The *Assessment of Biological Resources for the Proposed Sewer and Firewater Lines for the Construction Headquarters, Final Groundwater Remedy, Topock Compressor Station, California* was completed on August 5, 2015 and submitted for review during the 90% RTC process. The *Assessment of Biological Resources for a 35-acre Area on the West Side of Moabi Regional Park: Final Groundwater Remedy, Topock Compressor Station, California* was completed on September 8, 2015. The revised *Preliminary Assessment of Proposed Mitigation Planting Areas for Final Groundwater Remedy Impacts, Topock Compressor Station, California* (CH2M HILL 2015c) was submitted with the Construction/ Remedial Action Work Plan on November 18, 2015.

TABLE L1.1-1
Summary of Compliance with EIR Mitigation Measures
Groundwater Remedy Basis of Design Report/Final (100%) Design
PG&E Topock Compressor Station, Needles, California

Resources	Mitigation Number	Mitigation Measure	Which document(s) will contain or satisfy this measure?[1]	Action (Compliance Status)				Date Completed
				Preliminary (30%) Design	Intermediate (60%) Design	Pre-Final (90%)/Supplemental 90% Design	Final (100%) Design	
						memorandum was included in Appendix A10 of the Supplemental 90%. A technical memorandum titled *Preliminary Assessment of Proposed Mitigation Planting Areas for Final Groundwater Remedy Impacts, Topock Compressor Station, California* (CH2M HILL 2015e) identifies potential revegetation areas where mitigation vegetation could be planted to offset potential plant impacts that may occur during construction of the remedy. The memo was completed on January 27, 2015 and included in Appendix V of the Supplemental 90% for review and comment.	review comments, and was submitted with the Construction/Remedial Action Work Plan concurrently with the final design.	
Cultural Resources	CUL-1a-6	All additional phone calls and alarms associated with remediation activities or facilities shall not be routed through PG&E's existing alarm system utilized at the compressor station. The notification system for remediation-related alerts and/or phone calls shall not introduce additional noise to the project area, to the maximum extent feasible, provided there is ongoing compliance with applicable safety regulations or standards of the Federal Energy Regulatory Commission, Occupational Safety and Health Administration, and other agencies. (See Mitigation Measure NOISE-3 for additional mitigation related to the Topock Cultural Area).	Design submittals	The requirement of this mitigation measure has been incorporated into the design criteria as presented in Appendix C of this Basis of Design Report for the preliminary design. In addition, the detailed specification for phone calls and alarms associated with remediation activities will also be included the intermediate (60%) design.	The requirement of this mitigation measure has been incorporated into the design criteria as presented in Appendix C of the BOD Report for the intermediate (60%) design.	The requirement of this mitigation measure has been incorporated into the design criteria as presented in Appendix C of the BOD Report for the pre-final (90%) design.	The requirement of this mitigation measure has been incorporated into the design criteria as presented in Appendix C of this Final BOD Report for the final design.	The requirement of this mitigation measure has been incorporated into the design criteria as presented in Appendix C of the BOD Report for the final design, submitted on November 18, 2015.
Cultural Resources	CUL-1a-7	Nighttime construction-related activities shall be limited to work that cannot be disrupted or suspended until the following day, such as, but not limited to, well drilling and development or decommissioning activities. Lighting considerations, including the potential use of solar power for some lighting, shall be included as part of the remedial design plan to be developed with involvement of Interested Tribes and the U.S. Department of the Interior. To minimize construction and operations-related lighting impacts, the lighting in the remedial design plan shall include, at a minimum: (1) shrouding/shielding for portable lights needed during construction and operational activities; (2) installation of portable lights at the lowest allowable height and in the smallest number feasible to maintain adequate night lighting for safety; (3) shielding and orientation of lights such that off-site visibility of light sources, glare, and light from construction activities is minimized to the extent feasible. No additional permanent poles shall be installed for lighting. This mitigation measure is not	Design submittals	The requirement of this mitigation measure has been incorporated into the design criteria as presented in Appendix C of this Basis of Design Report for the preliminary design (see C.5.2). In addition, the detailed specification for lighting will also be included the intermediate (60%) design.	The requirement of this mitigation measure has been incorporated into the design criteria as presented in Appendix C of the BOD Report for the intermediate (60%) design. PG&E discussed this measure with interested Tribes in the monthly meetings on April 26, 2012, July 27, 2012, October 25, 2012, and November 9, 2012.	The requirement of this mitigation measure has been incorporated into the design criteria as presented in Appendix C of the BOD Report for the pre-final (90%) design.	The requirement of this mitigation measure has been incorporated into the design criteria as presented in Appendix C of this BOD Report for the final design.	The requirements of this mitigation measure were incorporated into the design criteria in Appendix C of the final design, submitted on November 18, 2015. The protocol for implementing CUL-1a-7 was included in Appendix P of the C/RAWP, which was submitted on November 18, 2015.

TABLE L1.1-1
Summary of Compliance with EIR Mitigation Measures
Groundwater Remedy Basis of Design Report/Final (100%) Design
PG&E Topock Compressor Station, Needles, California

Resources	Mitigation Number	Mitigation Measure	Which document(s) will contain or satisfy this measure?[1]	Action (Compliance Status)				Date Completed
				Preliminary (30%) Design	Intermediate (60%) Design	Pre-Final (90%)/Supplemental 90% Design	Final (100%) Design	
		meant to replace or subsume any actions required by the County or state or federal entities with regard to lighting required for minimum security and safety purposes.						
Cultural Resources	CUL-1a-8	Prior to commencement of construction, PG&E shall submit as part of the final Remedial Design, a CIMP developed in coordination with Interested Tribes for DTSC's review and approval. The CIMP may be developed in coordination with the federal agencies with land management responsibilities in the project area (e.g., BLM and USFWS) in accordance with the Programmatic Agreement (Appendix PA). The CIMP shall include, at a minimum and to DTSC's satisfaction, the following:	CIMP	Work on the CIMP commenced in May 2011. The CIMP will be submitted as part of final design as directed.	Work on the CIMP is ongoing. PG&E has been working collaboratively with interested Tribes on various sub-measures under the CIMP. A draft CIMP will be provided to interested Tribes for review prior to submittal to DTSC for review and approval.	PG&E started work on the CIMP in May 2011, in coordination with Interested Tribes during face- to-face meetings or teleconference calls held once per month. On July 8, 2013, PG&E provided a preliminary draft CIMP (including the IM-3 Decommissioning Plan) to Interested Tribes. Tribes provided comments on the draft CIMP in October 2013. PG&E reviewed and discussed select comments and responses with the Tribes during the March and April 2014 TMUs. At DTSC's and Tribes' request, the CIMP (PG&E 2014) was submitted on May 1, 2014, in advance of the 90% design (see paragraph below for submittal dates related to the IM-3 Decommissioning Plan). PG&E incorporated select Tribes' comments in the May 1, 2014 CIMP, and sent Tribes a letter to explain why certain comments were not incorporated. <u>IM-3 Decommissioning Plan (Appendix B of CIMP)</u> A preliminary draft IM-3 Decommissioning Plan was submitted to the FMIT in April 2013. The FMIT provided comments on the preliminary draft Plan in June 2013. PG&E updated the draft Plan and submitted to Interested Tribes as an appendix to the CIMP on July 8, 2013. The FMIT and the Hualapai Tribe provided comments on the updated Plan in October 2013. PG&E sent letters to respond to the Tribes' comments on July 1 and discussed the responses during the July TMU. PG&E incorporated select Tribes' comments and submitted a revised Plan with the 90% design on September 8, 2014.	Minor editorial updates (e.g., change 90% to final design) were made to the CIMP (PG&E 2015). The updated CIMP was included in Appendix H to the C/RAWP, which is submitted concurrently with the final design.	The Cultural Impact Mitigation Program was included in Appendix H to the C/RAWP, which was submitted concurrently with the final design on November 18, 2015.
Cultural Resources	CUL-1a-8a	a. Protocols for continued communication. Consistent with past practice and the communication processes previously entered into by PG&E with Interested Tribes, the company shall	EIR mitigation measures compliance reports (quarterly during design/	Outreach efforts have been and are ongoing. Table 7-2 of the 30% BOD Report contains a log of Tribal communications for the	Outreach efforts have occurred and are ongoing. Protocols for continued communication are being developed as part of the CIMP. This measure was	Outreach efforts have occurred and are ongoing (e.g., monthly TMUs). Protocols for continued	Communication with Interested Tribes has occurred and is ongoing (e.g., monthly TMUs). Protocols for continued communication were	Outreach efforts have occurred and are ongoing (e.g., monthly TMUs). Protocols for continued communication were developed

TABLE L1.1-1
Summary of Compliance with EIR Mitigation Measures
Groundwater Remedy Basis of Design Report/Final (100%) Design
PG&E Topock Compressor Station, Needles, California

Resources	Mitigation Number	Mitigation Measure	Which document(s) will contain or satisfy this measure?[1]	Action (Compliance Status)				Date Completed
				Preliminary (30%) Design	Intermediate (60%) Design	Pre-Final (90%)/Supplemental 90% Design	Final (100%) Design	
		continue to communicate with Interested Tribes during the design, construction, operation, and decommissioning of the project. Prior to implementation of construction, PG&E shall communicate with Interested Tribes that place cultural significance on the Topock Cultural Area. Outreach efforts between the Tribes and PG&E shall be communicated by PG&E to DTSC quarterly during the design and construction phase for review and input, and annually during project operations.	construction, annual during project operation)	specified time period. With the completion of the CMI Work Plan in November 2011, PG&E will start to submit quarterly reports to DTSC, starting with the first report (Q4 2011) in January 2012.	discussed with interested Tribes at the monthly meeting on May 24, 2012 and December 4, 2012. As required by DTSC, a log of communications with interested Tribes has been maintained and included in the quarterly EIR mitigation measure compliance reports since January 2012. The last quarterly report was submitted to DTSC on January 31, 2013. Table 6.1-2 of the 60% BOD Report contains a log of Tribal communications since the start of Q1 2013 through March 19, 2013.	communication were developed and included as part of the CIMP. As required by DTSC, a log of communications with interested Tribes has been maintained and included in the quarterly EIR mitigation measure compliance reports since January 2012. The last quarterly report was submitted on July 31, 2014; the next quarterly report is due October 31, 2014.	developed and included as part of the CIMP. As required by DTSC, a log of communications with interested Tribes has been maintained and included in the quarterly EIR mitigation measure compliance reports since January 2012. The last quarterly report was submitted on October 31, 2015; the next quarterly report is due January 31, 2016.	and included as part of the CIMP, included as Appendix H of the C/RAWP submitted on November 18, 2015. As required by DTSC, a log of communications with interested Tribes has been maintained and included in the quarterly EIR mitigation measure compliance reports since January 2012.
Cultural Resources	CUL-1a-8b	b. Protocols for the appropriate treatment of archaeological materials that may be disturbed or discovered during implementation of the final remedy, including protocols for the repatriation of significant items of cultural patrimony that may be recovered during the project, and protocols for the curation of cultural materials recovered during the project. Treatment of archaeological sites may include data recovery or capping. If data recovery is proposed, a Research Design following California Office of Historic Preservation guidelines or federal guidelines, as applicable, shall be prepared and reviewed and approved by DTSC.	CIMP	The required protocols will be developed and included in the CIMP. The CIMP will be submitted with the final design as directed.	Work on the CIMP is ongoing. The CIMP outline was discussed with interested Tribes on March 23 2012. PG&E has and will continue to discuss with and solicit inputs from interested Tribes on various mitigation measures under the CIMP. This measure was discussed with interested Tribes at the monthly meeting on June 28, 2012 and December 4, 2012. A draft CIMP will be provided to interested Tribes for review prior to submittal to DTSC for review and approval.	Protocols for the appropriate treatment of archaeological materials that may be disturbed or discovered during implementation of the final remedy were developed and included as part of the CIMP.	Protocols for the appropriate treatment of archaeological materials that may be disturbed or discovered during implementation of the final remedy were developed and included as part of the CIMP.	Protocols were included as part of the CIMP and submitted on November 18, 2015.
Cultural Resources	CUL-1a-8c	c. Protocols for the review of cultural resource-related documents throughout the design, construction, and operational phases.	CIMP	Draft protocols for review of cultural resource-related documents were included in the CMI Work Plan (Section 4.8), and will also be included in the CIMP. The CIMP will be submitted with the final design as directed.	Work on the CIMP is ongoing. The CIMP outline was discussed with interested Tribes on March 23 2012. PG&E has and will continue to discuss with and solicit inputs from interested Tribes on various mitigation measures under the CIMP. This measure was discussed with interested Tribes at the monthly meeting on June 28, 2012, August 23, 2012, September 19, 2012, September 27, 2012, and January 15, 2013. A draft CIMP will be provided to interested Tribes for review prior to submittal to DTSC for review and approval.	Protocols for the review of cultural resource-related documents throughout the design, construction, and operational phases were developed and included as part of the CIMP.	Protocols for the review of cultural resource-related documents throughout the design, construction, and operational phases were developed and included as part of the CIMP.	Protocols were included as part of the CIMP and submitted on November 18, 2015.

TABLE L1.1-1
Summary of Compliance with EIR Mitigation Measures
Groundwater Remedy Basis of Design Report/Final (100%) Design
PG&E Topock Compressor Station, Needles, California

Resources	Mitigation Number	Mitigation Measure	Which document(s) will contain or satisfy this measure?[1]	Action (Compliance Status)				Date Completed
				Preliminary (30%) Design	Intermediate (60%) Design	Pre-Final (90%)/Supplemental 90% Design	Final (100%) Design	
Cultural Resources	CUL-1a-8d	d. Protocols for the review of project design documents before the beginning of construction, including reviews of project design documents throughout the design process (e.g., Preliminary [approximately 30% completed], Intermediate [approximately 60% completed] and Pre-final design).	CIMP	Draft protocols for review of project design documents were included in the CMI Work Plan (Section 4.8), and will also be included in the CIMP. The CIMP will be submitted with the final design as directed.	Work on the CIMP is ongoing. The CIMP outline was discussed with interested Tribes on March 23 2012. PG&E has and will continue to discuss with and solicit inputs from interested Tribes on various mitigation measures under the CIMP. This measure was discussed with interested Tribes at the monthly meetings on February 23, 2012, March 22, 2012, April 26, 2012, May 24, 2012, and January 15, 2013. A draft CIMP will be provided to interested Tribes for review prior to submittal to DTSC for review and approval.	Protocols for the review of project design documents were developed and included as part of the CIMP.	Protocols for the review of project design documents were developed and included as part of the CIMP.	Protocols were included as part of the CIMP and submitted on November 18, 2015.
Cultural Resources	CUL-1a-8e	e. Protocols for the appropriate methods to be used to restore the environment to its preconstruction condition upon decommissioning of individual groundwater remedy facilities.	CIMP	The required protocols will be developed and included in the CIMP. The CIMP will be submitted with the final design as directed.	Work on the CIMP is ongoing. The CIMP outline was discussed with interested Tribes on March 23 2012. PG&E has and will continue to discuss with and solicit inputs from interested Tribes on various mitigation measures under the CIMP. This measure was discussed with Interested Tribes at the monthly meeting on January 15, 2013. A draft CIMP will be provided to interested Tribes for review prior to submittal to DTSC for review and approval.	Protocols for the appropriate methods to be used to restore the environment to its preconstruction condition upon decommissioning of individual groundwater remedy facilities were developed and included as part of the CIMP.	Protocols for the appropriate methods to be used to restore the environment to its preconstruction condition upon decommissioning of individual groundwater remedy facilities were developed and included as part of the CIMP.	Protocols were included as part of the CIMP and submitted on November 18, 2015.
Cultural Resources	CUL-1a-8f	f. A plan for the decommissioning and removal of the IM-3 Facility and proposed restoration of the site (to be an appendix to the CIMP).	Plan for Decommissioning and Removal of IM-3 Facility and Site Restoration	The plan for the decommissioning and removal of the IM-3 Facility and Site Restoration will be included as an appendix to the CIMP. The CIMP will be submitted with the final design as directed.	Work on the CIMP is ongoing. The CIMP outline was discussed with interested Tribes on March 23 2012. PG&E has and will continue to discuss with and solicit inputs from interested Tribes on various mitigation measures under the CIMP. A draft CIMP will be provided to interested Tribes for review prior to submittal to DTSC for review and approval.	The plan for the decommissioning and removal of the IM-3 Facility and site restoration was developed and included in Appendix B of the CIMP and also as an appendix of the Construction/Remedial Action Work Plan.	The plan for the decommissioning and removal of the IM-3 Facility and site restoration was revised to incorporate comments. The revised plan is included in Appendix B of the CIMP and also as an appendix of the Construction/Remedial Action Work Plan.	The revised IM-3 Decommissioning Plan was submitted as Appendix B of the CIMP, and submitted as Appendix F of the C/RAWP on November 18, 2015.

TABLE L1.1-1
Summary of Compliance with EIR Mitigation Measures
Groundwater Remedy Basis of Design Report/Final (100%) Design
PG&E Topock Compressor Station, Needles, California

Resources	Mitigation Number	Mitigation Measure	Which document(s) will contain or satisfy this measure?[1]	Action (Compliance Status)				Date Completed
				Preliminary (30%) Design	Intermediate (60%) Design	Pre-Final (90%)/Supplemental 90% Design	Final (100%) Design	
Cultural Resources	CUL-1a-8g	g. Protocols for the repatriation of clean soil cuttings generated during construction activities and during drilling associated with repair/replacement activities during operations and maintenance phases. The soil cuttings shall be managed in compliance with applicable laws and regulations on site.	CIMP	Discussions regarding repatriation of soils have been and are ongoing since early 2011. The required protocols will be developed and included in the CIMP. The CIMP will be submitted with the final design as directed.	Discussions regarding protocols for the repatriation of soils have been and are ongoing since early 2011. Agencies and Tribal members reviewed and provided inputs on the draft *Management Protocol for Handling and Disposition of Displaced Site Material*, as well as participated in conference calls (January 9, 2012, April 10, 2012, June 15, 2012, and August 2012) to discuss comments. A revised protocol along with responses to comments (RTCs) was sent to Agencies and Tribes for review on August 28, 2012. FMIT sent a comment letter on the revised protocol and RTCs on September 7, 2012. DTSC responded to FMIT on September 18, 2012. Tribes and Agencies met on October 16, 2012 to further discuss RTC process. Subsequent to this meeting, DTSC issued directives for implementation of an updated RTC process. On January 14, 2013, the revised protocol was reissued along with updated RTCs (that reflected the updated RTC process) as part of the Final Soil RCRA Facility Investigation/Remedial Investigation Work Plan (CH2M HILL 2013b). The revised protocol is also included in Appendix B of the Soil Management Plan (Volume 4 of the Draft O&M Manual), and will again be included in the CIMP. A draft CIMP will be provided to interested Tribes for review prior to submittal to DTSC for review and approval.	The revised *Management Protocol for Handling and Disposition of Displaced Site Material* was included in Appendix C of the CIMP, Appendix B of the Soil Management Plan (Volume 4 of the Revised O&M Manual), and also as an appendix of the Construction/Remedial Action Work Plan. Detailed procedures to implement the management protocol are included in the Soil Management Plan.	The revised *Management Protocol for Handling and Disposition of Displaced Site Material* (PG&E 2015b), which is the protocol for the repatriation of clean soils cuttings generated during construction and O&M, was revised in response to 90% comment #803. A draft redline of the protocol was provided for discussion during the 90% RTC process at the July 23, August 19, and August 26, 2015 Technical Working Group (TWG) meetings. The revised protocol is included in Appendix C of the CIMP, Appendix B of the Soil Management Plan (Volume 4 of the Revised O&M Manual), and also as an appendix of the Construction/Remedial Action Work Plan. Detailed procedures to implement the management protocol are included in the Soil Management Plan.	The revised protocol was included as part of the CIMP and submitted on November 18, 2015.

TABLE L1.1-1
Summary of Compliance with EIR Mitigation Measures
Groundwater Remedy Basis of Design Report/Final (100%) Design
PG&E Topock Compressor Station, Needles, California

Resources	Mitigation Number	Mitigation Measure	Which document(s) will contain or satisfy this measure?[1]	Action (Compliance Status)				Date Completed
				Preliminary (30%) Design	Intermediate (60%) Design	Pre-Final (90%)/Supplemental 90% Design	Final (100%) Design	
Cultural Resources	CUL-1a-8h	h. Protocols for the appropriate methods, consistent with Mitigation Measure NOISE-3, to reduce auditory impacts.	CIMP	The required protocols will be developed and included in the CIMP. The CIMP will be submitted with the final design as directed.	Work on the CIMP is ongoing. The CIMP outline was discussed with interested Tribes on March 23 2012. PG&E has and will continue to discuss with and solicit inputs from interested Tribes on various mitigation measures under the CIMP. A draft CIMP will be provided to interested Tribes for review prior to submittal to DTSC for review and approval. This measure was discussed with interested Tribes at the monthly meeting on February 19, 2013.	Protocols for the appropriate methods, consistent with Mitigation Measure NOISE-3, to reduce auditory impacts, were developed and included as part of the CIMP.	Protocols for the appropriate methods, consistent with Mitigation Measure NOISE-3, to reduce auditory impacts, were developed and included as part of the CIMP. Specifically, the following communication protocols developed as part of the CIMP noise protocol (Section 2.8.4) will be implemented. All project construction activities will be communicated to nearby noise-sensitive receptors and Interested Tribes. Elements of this communication include: • A detailed project schedule is established and published for all stakeholders. • Monthly notification to agencies and Tribes of scheduled field activities. During periods of extensive construction activity, these notifications will be issued more frequently – weekly and/or daily, as appropriate. • After issuing these notifications, notify the nearby noise-sensitive receptors and Tribes of any schedule changes. • Provide an open-communication process for Tribal representatives to seek more information about Project noise-generating activities. PG&E welcomes Tribal input on timing of Project noise-generating activities and on potential noise-reducing methods. Per CUL-1a-8k, if ceremonies are requested by any Tribe during construction, then PG&E will follow the protocol to accommodate such requests, which could include monitoring to ensure that construction noise does not exceed the normally acceptable exterior noise level standard in San Bernardino County for places of worship. • The contact information for the disturbance coordinator will be posted in a conspicuous location near the construction areas. This information will also be mailed to	Protocols were included as part of the CIMP and submitted on November 18, 2015.

TABLE L1.1-1
Summary of Compliance with EIR Mitigation Measures
Groundwater Remedy Basis of Design Report/Final (100%) Design
PG&E Topock Compressor Station, Needles, California

Resources	Mitigation Number	Mitigation Measure	Which document(s) will contain or satisfy this measure?[1]	Action (Compliance Status)				Date Completed
				Preliminary (30%) Design	Intermediate (60%) Design	Pre-Final (90%)/Supplemental 90% Design	Final (100%) Design	
							all nearby noise-sensitive receptors and Interested Tribes. • In addition to the communication methods described above, PG&E will also consider posting construction schedule information at the information kiosk (CUL-1a-3c). PG&E may also decide to use other communication processes, including a Project website (a Project website could list Project activity schedules and other Project related information) that could be accessed by computer or smartphone and/or other simple push applications that apply to mobile devices.	
Cultural Resources	CUL-1a-8i	i. Protocols for the appropriate methods, consistent with Mitigation Measures AES-1 and AES-2, to reduce visual intrusions.	CIMP	The required protocols will be developed and included in the CIMP. The CIMP will be submitted with the final design as directed.	Work on the CIMP is ongoing. The CIMP outline was discussed with interested Tribes on March 23 2012. PG&E has and will continue to discuss with and solicit inputs from interested Tribes on various mitigation measures under the CIMP. This measure was discussed with interested Tribes at the monthly meeting on June 28, 2011, October 25, 2012, November 9, 2012, and March 19, 2013. A draft CIMP will be provided to interested Tribes for review prior to submittal to DTSC for review and approval.	Protocols for the appropriate methods, consistent with Mitigation Measures AES-1 and AES-2, to reduce visual intrusion were developed and included as part of the CIMP.	Protocols for the appropriate methods, consistent with Mitigation Measures AES-1 and AES-2, to reduce visual intrusion were developed and included as part of the CIMP.	Protocols were included as part of the CIMP and submitted on November 18, 2015.
Cultural Resources	CUL-1a-8j	j. Protocols for Tribal notification in advance of project-related activities that the Interested Tribes may feel have the potential to cause adverse impacts to sensitive cultural resources.	CIMP	The required protocols will be developed and included in the CIMP. The CIMP will be submitted with the final design as directed.	Work on the CIMP is ongoing. The CIMP outline was discussed with interested Tribes on March 23 2012. PG&E has and will continue to discuss with and solicit inputs from interested Tribes on various mitigation measures under the CIMP. This measure was discussed with Interested Tribes at the monthly meeting on September 27, 2012, October 10, 2012, November 9, 2012, and March 19, 2013. A draft CIMP will be provided to interested Tribes for review prior to submittal to DTSC for review and approval.	Protocols for Tribal notification in advance of project-related activities were developed and included as part of the CIMP.	Protocols for Tribal notification in advance of project-related activities that have the potential to cause adverse impacts to sensitive cultural resources were developed and included as part of the CIMP.	Protocols were included as part of the CIMP and submitted on November 18, 2015.

TABLE L1.1-1
Summary of Compliance with EIR Mitigation Measures
Groundwater Remedy Basis of Design Report/Final (100%) Design
PG&E Topock Compressor Station, Needles, California

Resources	Mitigation Number	Mitigation Measure	Which document(s) will contain or satisfy this measure?[1]	Action (Compliance Status)				Date Completed
				Preliminary (30%) Design	Intermediate (60%) Design	Pre-Final (90%)/Supplemental 90% Design	Final (100%) Design	
Cultural Resources	CUL-1a-8k	k. Protocols to be followed by project personnel to accommodate, if feasible as determined by DTSC, key Tribal ceremonies that involve the Topock Cultural Area.	CIMP	Project personnel will accommodate, if feasible as determined by DTSC, key Tribal ceremonies that involve the Topock Cultural Area, provided that such Tribal ceremonies may not interfere with the expeditious implementation of the remedy or create health and safety concerns. This protocol will be included in the CIMP. The CIMP will be submitted with the final design as directed.	Work on the CIMP is ongoing. The CIMP outline was discussed with interested Tribes on March 23 2012. PG&E has and will continue to discuss with and solicit inputs from interested Tribes on various mitigation measures under the CIMP. This measure was discussed with interested Tribes at the monthly meeting on May 24, 2012, September 27, 2012, October 10, 2012, November 9, 2012, and February 19, 2013. A draft CIMP will be provided to interested Tribes for review prior to submittal to DTSC for review and approval.	Protocols to be followed by project personnel to accommodate key Tribal ceremonies that involve the Topock Cultural Area were developed and included as part of the CIMP.	Protocols to be followed by project personnel to accommodate key Tribal ceremonies that involve the Topock Cultural Area were developed and included as part of the CIMP.	Protocols were included as part of the CIMP and submitted on November 18, 2015.
Cultural Resources	CUL-1a-8l	l. Provisions affording sufficient Tribal monitors to observe ground-disturbing activities and/or other scientific surveying (e.g., biological surveys) that may occur in preparation for construction activities. Ground-disturbing activities include trenching, excavation, grading, well excavation/drilling, decommissioning of the IM-3 Facility and subsurface pipeline, or other construction-related activities.	CIMP	Tribal monitors will be invited to observe ground-disturbing activities. This provision will be included in the CIMP. The CIMP will be submitted with the final design as directed.	Work on the CIMP is ongoing. The CIMP outline was discussed with interested Tribes on March 23 2012. PG&E has and will continue to discuss with and solicit inputs from interested Tribes on various mitigation measures under the CIMP. This measure was discussed with interested Tribes at the monthly meeting on May 24, 2012, December 18, 2012, and February 19, 2013. A draft CIMP will be provided to interested Tribes for review prior to submittal to DTSC for review and approval.	Protocols for Tribal monitors to observe ground- disturbing activities were developed and included as part of the CIMP.	Protocols for affording sufficient Tribal monitors to observe ground-disturbing activities and/or other scientific surveying done in preparation of construction were developed and included as part of the CIMP.	Protocols were included as part of the CIMP and submitted on November 18, 2015.
Cultural Resources	CUL-1a-8m	m. Provisions of reasonable compensation for Tribal monitors consistent with historical rates.	CIMP	Tribal monitors will receive reasonable compensation consistent with agreed upon historical rates. This provision will be included in the CIMP. The CIMP will be submitted with the final design as directed.	Work on the CIMP is ongoing. The CIMP outline was discussed with interested Tribes on March 23 2012. PG&E has and will continue to discuss with and solicit inputs from interested Tribes on various mitigation measures under the CIMP. This measure was discussed with interested Tribes at the monthly meeting on May 24, 2012, December 18, 2012, and March 19, 2013. A draft CIMP will be provided to interested Tribes for review prior to submittal to DTSC for review and approval.	Provisions required in this mitigation measure were developed and included as part of the CIMP.	Provisions for reasonable compensation for Tribal monitors consistent with historical rates were developed and included as part of the CIMP.	Protocols were included as part of the CIMP and submitted on November 18, 2015.

TABLE L1.1-1
Summary of Compliance with EIR Mitigation Measures
Groundwater Remedy Basis of Design Report/Final (100%) Design
PG&E Topock Compressor Station, Needles, California

Resources	Mitigation Number	Mitigation Measure	Which document(s) will contain or satisfy this measure?[1]	Action (Compliance Status)				Date Completed
				Preliminary (30%) Design	Intermediate (60%) Design	Pre-Final (90%)/Supplemental 90% Design	Final (100%) Design	
Cultural Resources	CUL-1a-8n	n. Locations requiring specific protective devices, such as temporary fencing, flagging, or other type of demarcation during construction.	CIMP	Locations requiring specific protective devices, such as temporary fencing, flagging, or other type of demarcation during construction will be included in the CIMP.	Work on the CIMP is ongoing. The CIMP outline was discussed with interested Tribes on March 23 2012. PG&E has and will continue to discuss with and solicit inputs from interested Tribes on various mitigation measures under the CIMP. This measure was discussed with interested Tribes at the monthly meeting on April 26, 2012, August 23, 2012, September 19, 2012, and March 19, 2013. A draft CIMP will be provided to interested Tribes for review prior to submittal to DTSC for review and approval.	Protocols for protective measures for archaeological/historical sites during construction were developed and included as part of the CIMP.	Protocols for determining the locations requiring specific protective devices for protection of cultural resources during construction and protocols for the protective measures were developed and included as part of the CIMP.	Protocols were included as part of the CIMP and submitted on November 18, 2015.
Cultural Resources	CUL-1a-8o	o. Protocols for the reporting of discoveries of cultural importance consistent with existing statutes and regulations.	CIMP	The required protocols will be developed and included in the CIMP. The CIMP will be submitted with the final design as directed.	Work on the CIMP is ongoing. The CIMP outline was discussed with interested Tribes on March 23 2012. PG&E has and will continue to discuss with and solicit inputs from interested Tribes on various mitigation measures under the CIMP. This measure was discussed with interested Tribes at the monthly meeting on June 28, 2012, September 27, 2012, October 10, 2012, and November 9, 2012. A draft CIMP will be provided to interested Tribes for review prior to submittal to DTSC for review and approval.	Protocols for the reporting of discoveries of cultural importance were developed and included as part of the CIMP.	Protocols for the reporting of discoveries of cultural importance were developed and included as part of the CIMP.	Protocols were included as part of the CIMP and submitted on November 18, 2015.
Cultural Resources	CUL-1a-8p	p. Protocols for the inspection of remediation facilities and/or staging areas throughout the construction phase.	CIMP	The required protocols will be developed and included in the CIMP. The CIMP will be submitted with the final design as directed.	Work on the CIMP is ongoing. The CIMP outline was discussed with interested Tribes on March 23 2012. PG&E has and will continue to discuss with and solicit inputs from interested Tribes on various mitigation measures under the CIMP. This measure was discussed with interested Tribes at the monthly meeting on June 28, 2012 and December 4, 2012. A draft CIMP will be provided to interested Tribes for review prior to submittal to DTSC for review and approval.	Protocols for the inspection of remediation facilities and/or staging areas during construction were developed and included as part of the CIMP.	Protocols for the inspection of remediation facilities and/or staging areas during construction were developed and included as part of the CIMP.	Protocols were included as part of the CIMP and submitted on November 18, 2015.

TABLE L1.1-1
Summary of Compliance with EIR Mitigation Measures
Groundwater Remedy Basis of Design Report/Final (100%) Design
PG&E Topock Compressor Station, Needles, California

Resources	Mitigation Number	Mitigation Measure	Which document(s) will contain or satisfy this measure?[1]	Action (Compliance Status)				Date Completed
				Preliminary (30%) Design	Intermediate (60%) Design	Pre-Final (90%)/Supplemental 90% Design	Final (100%) Design	
Cultural Resources	CUL-1a-9	During selection of the design and specific locations for physical remediation facilities, PG&E shall, in communication with the Interested Tribes (and subject to their review), and to the maximum extent feasible, as determined by DTSC, give: (1) priority to previously disturbed areas for the placement of new physical improvements; and (2) priority to re-use of existing physical improvements, such as but not limited to wells and pipelines, but not including IM-3 facilities. "Disturbed" areas in this context means those areas outside of documented archaeological site boundaries that have experienced ground disturbance in the last 50 years. PG&E shall produce an aerial map of these disturbed areas to guide project design, and PG&E shall make a good faith effort to provide Tribes with an opportunity to review and comment on the information displayed on the map in determining "disturbed" areas.	Aerial map of disturbed areas	As directed, PG&E prepared an aerial map of disturbed areas to guide project design and made a good faith effort to provide Tribes with an opportunity to review and comment. PG&E provided the disturbed areas map to Interested Tribes for review and comment on May 26, 2011. Written comments on the map were received from the FMIT on July 5, 2011 and the Hualapai Tribe on July 1, 2011. PG&E responded to the Hualapai and the FMIT in July 2011 with an invitation to a site walk for discussion of the comments and ground-truth the map. To date, three Tribes have attended site walks/onsite meetings to discuss the map -- the site walk/meeting with the Colorado River Indian Tribes (CRIT) occurred on June 7, 2011, the site walk/meeting with the FMIT occurred on October 4, 2011, and the site walk/meeting with the Hualapai Tribe occurred on October 26, 2011. Additional discussions regarding the aerial map are planned. A current version of the aerial map is included in Appendix A2 of this Basis of Design Report. In compliance with the directive to give priority to re-use of existing physical improvements and to previously disturbed areas for new physical improvements, the preliminary (30%) design proposes the following: • The freshwater supply for the remedy will be the existing HNWR-1 well. If needed, this water supply can be supplemented by the current Compressor Station water supply (by existing Topock-2 and Topock-3 wells in Arizona). • The freshwater supply storage will be the existing water storage tanks at the Compressor Station. • The remedy-produced water treatment plant will be located	The design has been and is carried out in a manner that gives: (1) priority to previously disturbed areas for the placement of new physical improvements; and (2) priority to re-use of existing physical improvements, including but not limited to wells and pipelines, but not including IM-3 facilities. In compliance with the directive to give priority to re-use of existing physical improvements and to previously disturbed areas for new physical improvements, the intermediate (60%) design proposes the following: • All existing monitoring wells have been incorporated into the monitoring well network for the remedy, thereby reducing the need for drilling new monitoring wells. • The freshwater supply for the remedy will be the existing HNWR-1 well. • The freshwater supply storage will be the existing water storage tanks at the Compressor Station. • The remedy-produced water treatment plant and the freshwater pre-injection treatment system will be located entirely within the footprint of Compressor Station. • The central maintenance facility for the remedy will be located entirely on PG&E property, at the Transwestern Bench. By centralizing maintenance functions into one location, this reduces the footprint of remedy structure outside of PG&E property.	The aerial map of disturbed areas was updated to include areas with planned facilities associated with freshwater supply in Arizona, and areas west of Moabi Regional Park associated with soil storage. The updated map is included in Appendix A2 of the 90% BOD Report. In compliance with the directive to give priority to re-use of existing physical improvements and to previously disturbed areas for new physical improvements, the pre-final (90%) design proposes the following: • All existing monitoring wells have been incorporated into the monitoring well network for the remedy, thereby reducing the need for drilling new monitoring wells. • The piping corridor is located almost entirely in existing roadways, right- of- ways and previously disturbed areas. • Most of the existing access roads have been incorporated into the 90% design. • The remedy-produced water conditioning plant and the contingent systems (arsenic treatment and dissolved metals removal) are located entirely within the footprint of the Compressor Station. • The operation building and carbon storage/amendment facilities are located on the existing Transwestern Bench and MW-20 Bench. • All of the proposed soil storage and construction staging areas are located on previously disturbed areas. • The main construction headquarters and staging area is located on previously disturbed areas at Moabi Regional Park.	The aerial map of disturbed areas was updated to include areas with planned facilities associated with freshwater supply in Arizona, and areas west of Moabi Regional Park associated with soil storage. The updated map is included in Appendix A2 of this report. In compliance with the directive to give priority to re-use existing physical improvements and to use previously disturbed areas for new physical improvements to the maximum extent feasible as determined by DTSC, the final design proposes the following: • Incorporating all existing monitoring wells into the monitoring well network for the remedy, thereby reducing the need for drilling new monitoring wells. • Locating the piping corridor almost entirely in existing roadways, right-of-ways and previously disturbed areas. • Incorporating most of the existing access routes into the design. • Locating the remedy-produced water conditioning plant and the contingent systems (arsenic treatment and dissolved metals removal) entirely within the footprint of the Compressor Station. • Locating the operation building on the existing Transwestern Bench. • Locating the consolidated carbon storage/amendment facilities on the MW-20 Bench. • Locating all of the proposed soil processing and construction staging areas on previously disturbed areas. • Locating the main construction headquarters and staging area on previously disturbed areas (at Moabi Regional Park). In compliance with this measure, PG&E communicated with the Interested Tribes regarding designing the remedy in a manner that located infrastructure in previously disturbed	A current version of the aerial map of disturbed areas was submitted on November 18, 2011. An update of the aerial map of disturbed areas is included in Appendix A2 of this Final BOD Report.

TABLE L1.1-1
Summary of Compliance with EIR Mitigation Measures
Groundwater Remedy Basis of Design Report/Final (100%) Design
PG&E Topock Compressor Station, Needles, California

Resources	Mitigation Number	Mitigation Measure	Which document(s) will contain or satisfy this measure?[1]	Action (Compliance Status)				Date Completed
				Preliminary (30%) Design	Intermediate (60%) Design	Pre-Final (90%)/Supplemental 90% Design	Final (100%) Design	
				entirely within the footprint of Compressor Station and much of it will replace existing structures within the maintenance shop area.			areas and reused existing physical improvements, including providing the 30%, 60%, and 90% design documents to the Interested Tribes for their review and comment.	
Cultural Resources	CUL-1a-10	PG&E shall consider the location of Loci A, B, and C of the Topock Maze during the design and approval of the physical facilities necessary for the final remedy and is prohibited from creating any direct physical impact on the Topock Maze, as it is manifested archaeologically. Through the design, PG&E shall prevent all indirect (e.g. noise, aesthetics) impacts on the Topock Maze, to the maximum extent feasible as determined by DTSC.	Design submittals	The design has been and is carried out in a manner that excluded direct impacts on Loci A, B, and C of the Topock Maze. Prevention of indirect impacts to the Maze will be incorporated into the design to the maximum extent feasible as determined by DTSC.	The design has been and is carried out in a manner that avoids any direct impacts on Loci A, B, and C of the Topock Maze. PG&E Remediation Resources Specialist Glenn Caruso participated in field reviews of planned remedial facilities with the design team on April 23-24 and June 20, 2012. The purpose of these field reviews along with in-office reviews is to ensure that the footprints of planned facilities do not create direct physical impact on the Topock Maze, as it is manifested archaeologically. There are no remedy facilities inside the Topock Maze. Prevention of indirect impacts to the Maze will be incorporated into the design to the maximum extent feasible as determined by DTSC.	The design was carried out in a manner that avoids any direct impacts on Loci A, B, and C of the Topock Maze. PG&E Cultural Resources Expert Glenn Caruso participated in field review of planned remedial facilities and temporary construction footprints with the design team on April 7-10, 2014. Glenn Caruso also led in-office reviews of planned facilities and temporary construction-related footprints. The purpose of the field review along with in-office reviews is to ensure that project footprints do not create direct physical impact on the Topock Maze, as it is manifested archaeologically. There are no remedy facilities inside the Topock Maze. Prevention of indirect impacts (e.g., noise, aesthetics) to the Maze has been incorporated into the design as follows: <u>Noise/Vibration</u> a) In compliance with EIR mitigation measure NOISE-1a, there is no proposed remediation or new monitoring wells within 45 feet of vibration-sensitive receptors (i.e., homes/structures) or within 30 feet and 275 feet of vibration-sensitive land uses (i.e., homes) in California and Arizona, respectively. b) During the design, PG&E conducted site visits with Agencies, Tribes, and Stakeholders to view and obtain inputs on locations of planned facilities including new remediation, new monitoring wells, and piping corridors. c) In response to Tribes' comments on the 60% design, PG&E moved all remedy wells and vaults from the west side of NTH to the east side. In addition, PG&E will not use the east side (side that is closer to Maze A) of	The design was carried out in a manner that avoids any direct impacts on the Topock Maze as it is manifested archaeologically. PG&E Cultural Resources Expert Glenn Caruso led in-office reviews of planned facilities and temporary construction-related footprints. The purpose of the reviews is to ensure that project footprints do not create direct physical impact on the Topock Maze as it is manifested archaeologically. There are no remedy facilities inside the Topock Maze as it is manifested archaeologically. Prevention of indirect impacts (e.g., noise, aesthetics) to the Maze has been incorporated into the design to the maximum extent feasible as follows: <u>Noise/Vibration</u> a) During the design, PG&E conducted site visits with Agencies, Tribes, and Stakeholders to view and obtain inputs on locations of planned facilities including new remediation, new monitoring wells, and piping corridors. b) In response to Tribes' comments about noise and vibration impacts on the Maze during the 60% design, PG&E moved all remedy wells and vaults from the west side of NTH to the east side. In addition, PG&E will not use the east side (side that is closer to Maze A) of the TCS evaporation ponds for remedy construction staging. c) As indicated in the 60% RTC #319, the Noise Engineer has reviewed the selection of aboveground transformers and air conditioning units for the enclosures of aboveground communication/control panels for conformance with the project noise design criteria (Appendix C of the Final BOD Report) and found them to be in compliance.	This measure was incorporated in the final design, which was submitted on November 18, 2015.

TABLE L1.1-1
Summary of Compliance with EIR Mitigation Measures
Groundwater Remedy Basis of Design Report/Final (100%) Design
PG&E Topock Compressor Station, Needles, California

Resources	Mitigation Number	Mitigation Measure	Which document(s) will contain or satisfy this measure?[1]	Action (Compliance Status)				Date Completed
				Preliminary (30%) Design	Intermediate (60%) Design	Pre-Final (90%)/Supplemental 90% Design	Final (100%) Design	
						the TCS evaporation ponds for remedy construction staging. d) As indicated in the 60% RTC #319, the Noise Engineer has reviewed the selection of aboveground transformers and air conditioning units for the enclosures of aboveground communication/control panels for conformance with the project noise design criteria (Appendix C of the 90% BOD Report). e) Mitigation measure NOISE-2 to reduce auditory impacts related to project-generated construction-related noise has been incorporated into the Construction/Remedial Action Work Plan (Section 4) for implementation during construction. f) PG&E has developed protocols to reduce auditory impacts, consistent with EIR mitigation measure NOISE-3, as part of the CIMP, and has included those protocols in the Construction/Remedial Action Work Plan (Section 4) for implementation. <u>Aesthetics</u> a) During the design, PG&E conducted site visits with Agencies, Tribes, and Stakeholders to view and obtain inputs on locations of planned remedial facilities. b) PG&E implemented additional design protocols to reduce visual intrusions, as outlined in Section 2.9.2 of the CIMP. c) PG&E has and will continue to provide opportunities for Agency, Tribal, and Other Stakeholder input on the visual nature of project design through inclusion of visualizations of select remedy components in design documents (CIMP protocol, see Section 2.9.3). d) PG&E has developed protocols to reduce visual intrusion, consistent with mitigation measures AES-1 and AES-2, as part of the CIMP, and has included these protocols in the Construction/Remedial Action Work Plan (Section 4) for implementation.	d) Mitigation measure NOISE-2 to reduce auditory impacts related to project-generated construction-related noise has been incorporated into the Construction/Remedial Action Work Plan (Section 4) for implementation during construction. e) PG&E has developed protocols to reduce auditory impacts in the Topock Cultural Area, consistent with EIR mitigation measure NOISE-3, as part of the CIMP, and has included those protocols in the Construction/ Remedial Action Work Plan (Section 4) for implementation. <u>Aesthetics</u> a) During the design, PG&E conducted site visits with Agencies, Tribes, and Stakeholders to view and obtain inputs on locations of planned remedial facilities. b) PG&E implemented additional design protocols to reduce visual intrusions, as outlined in Section 2.9.2 of the CIMP. c) PG&E has provided opportunities for Agency, Tribal, and Other Stakeholder input on the visual nature of project design through inclusion of visualizations of select remedy components in design documents (Section 2.9.3 of the CIMP). d) PG&E has developed protocols to reduce visual intrusion, consistent with mitigation measures AES-1 and AES-2, as part of the CIMP (Section 2.9), and has included these protocols in the Construction/Remedial Action Work Plan (Section 4) for implementation. e) In response to Tribes' comments on the 90% design, PG&E changed the design of the Bat Cave Wash crossing in the Uplands to directly bury pipes/ conduits in the wash (instead of in the road), thereby eliminating the concrete box culverts. Concurrently, PG&E changed the design of the Bat Cave Wash crossing near TCS to directly bury pipes/conduits in the wash, thereby eliminated the aerial crossing. The revised design was submitted for review and comment	

TABLE L1.1-1
Summary of Compliance with EIR Mitigation Measures
Groundwater Remedy Basis of Design Report/Final (100%) Design
PG&E Topock Compressor Station, Needles, California

Resources	Mitigation Number	Mitigation Measure	Which document(s) will contain or satisfy this measure?[1]	Action (Compliance Status)				Date Completed
				Preliminary (30%) Design	Intermediate (60%) Design	Pre-Final (90%)/Supplemental 90% Design	Final (100%) Design	
							during the 90% RTC process and is included in the final design.	
Cultural Resources	CUL-1a-11	PG&E shall provide an open grant for two part-time cultural resource specialist/project manager positions during the design and construction phases of the remediation project. The positions shall be filled by qualified members of an Interested Tribe as nominated by a majority vote of their Tribal Council(s) and appointed by DTSC's project manager if more than two members are nominated. The award of the grants is for continued involvement in review of project documents and participation in project-related meetings, including TRC meetings, at rates of historic compensation. Additionally, in light of FMIT's ownership of land in the project area and historical involvement in the environmental process, additional funding is guaranteed for one full-time FMIT position upon submission of an application by a qualified FMIT member who shall be appointed by the FMIT council, provided such funding is not duplicative of the services and funding provided by PG&E pursuant to the Settlement Agreement between PG&E and the FMIT in Fort Mojave Indian *Tribe v. Dept. of Toxic Substances Control, et al.*, Case No. 05CS00437 for a position with the FMIT's AhaMakav Culture Society. The payment of grant monies shall be timed to the awarded Tribes' fiscal cycles so that the Tribes are not forced to front funds for long periods of time. These positions shall act as cultural resources contacts and project managers for interactions between the Tribes, PG&E, and DTSC to ensure coordination for review and comment of subsequent project and/or environmental documents related to the design and implementation of the groundwater remediation project to avoid, reduce, or otherwise mitigate impacts on historical resources, as defined by CEQA. This funding is separate from provisions for Tribal monitor positions and shall not be used for routine Tribal business or legal counsel. For review and approval, PG&E shall provide DTSC with the names of the selected grant recipients and an annual report that summarizes activities associated with the grant program. Upon the conclusion of the construction phase of the project, the necessity and dollar value of the grant program shall be assessed by PG&E and, with the approval of DTSC, shall either be extended or terminated under the operations and maintenance phase.	Administrative step - no technical document required	A notice of the open grant for funding of two part-time cultural resource specialist/project manager positions was sent to Interested Tribes by a letter dated April 20, 2011. To date, PG&E has not received any responses to the April 20, 2011 letter from Tribes.	As of the submittal of the 60% design, PG&E has funded a second project manager position for the Cocopah Indian Tribe. The first funded position was for the Chemehuevi Indian Tribe.	There was no change since the 60% design.	There was no change since the 90% design.	As of the time of this writing, PG&E has funded a second project manager position for the Cocopah Indian Tribe. The first funded position was for the Chemehuevi Indian Tribe.
Cultural Resources	CUL-1a-12	PG&E shall provide sufficient opportunity, as determined by DTSC, for Interested Tribes to provide a traditional healing/cleansing ceremony (or	Construction/Remedial Action Work Plan; Plan for Decommissioning and Removal of IM-3 Facility	PG&E will offer interested Native American Tribes the opportunity to provide a traditional healing/cleansing ceremony (or	PG&E will offer interested Native American Tribes the opportunity to provide a traditional healing/cleansing ceremony (or ceremonies) before and	PG&E will offer interested Native American Tribes the opportunity to provide a traditional healing/ cleansing ceremony (or ceremonies)	PG&E will provide sufficient opportunity for interested Native American Tribes to provide a traditional healing/cleansing	This measure is satisfied by the CIMP, which is Appendix H of the C/RAWP and was submitted on November 18, 2015.

TABLE L1.1-1
Summary of Compliance with EIR Mitigation Measures
Groundwater Remedy Basis of Design Report/Final (100%) Design
PG&E Topock Compressor Station, Needles, California

Resources	Mitigation Number	Mitigation Measure	Which document(s) will contain or satisfy this measure?[1]	Action (Compliance Status)				Date Completed
				Preliminary (30%) Design	Intermediate (60%) Design	Pre-Final (90%)/Supplemental 90% Design	Final (100%) Design	
		ceremonies) before and after ground disturbing construction activities occur.	and Site Restoration; Plan for Decommissioning of Remedy Facilities and Restoration	ceremonies) before and after ground disturbing activities occur.	after ground disturbing activities occur.	before and after ground disturbing activities occur.	ceremony (or ceremonies) before and after ground disturbing activities occur by following the protocols in Sections 2.10 and 2.11 of the CIMP.	
Cultural Resources	CUL-1a-13	PG&E shall, in communication with Interested Tribes, develop as part of the CMI Workplan, a worker cultural sensitivity education program. The program shall be implemented before commencement of construction and throughout construction and operations as personnel are added. This program may include information provided directly by Tribal entities either in written form or on video, in a manner consistent with Appendix C in the existing BLM Programmatic Agreement. The worker cultural sensitivity education program shall ensure that every person working on the project as an employee or contractor, before participating in design or outdoor activities at the project site, is informed regarding: the cultural significance of the Topock Cultural Area, appropriate behavior to use within the Topock Cultural Area, activities that are to be avoided in the Topock Cultural Area, and consequences in the event of noncompliance.	Worker Cultural Sensitivity Education Program	As described in the CMI Work Plan (Section 4.2.1), the education on cultural/historical resources sensitivity for Topock currently occurs via periodic training and project initiation meetings. Sensitivity training classes are conducted at least annually, and are attended by all workers available to participate. Sensitivity training/education is also provided at project initiation meetings, typically held at the site prior to field work. The training is provided by the Site Operations Manager, the Project Archaeologist, and Interested Tribal members who attend the meetings. In compliance with this measure, a training/education manual will be prepared using existing and new material, as available.	As described in Section 4.2.1 of the CMI/RD Work Plan (CH2M HILL 2011a), the education on cultural/historical resources sensitivity for Topock currently occurs via periodic training and project initiation meetings. Sensitivity training classes are conducted at least annually, and are attended by all workers available to participate. Sensitivity training/education is also provided at project initiation meetings, typically held at the site prior to field work. The training is provided by the Site Operations Manager, the Project Remediation Resources Specialist, and Interested Tribal members who attend the meetings. In compliance with this measure, PG&E and Tribes are collaborating on a training/education manual to educate workers. This measure was discussed with interested Tribes at the monthly meeting on April 26, 2012, August 23, 2012 and September 19, 2012.	PG&E has prepared, in coordination with agencies and Tribes, educational materials used in Orientation sessions for the Topock project. In addition, PG&E has prepared, in compliance with this measure, a protocol for the development of a cultural sensitivity education program to educate workers (included as an appendix to the Construction/Remedial Action Work Plan). Implementation of this protocol is underway.	PG&E has prepared, in coordination with agencies and Tribes, cultural sensitivity educational materials used in Orientation sessions for the Topock project. In addition, PG&E has prepared a protocol for the development of a cultural sensitivity education program to educate workers (included as an appendix to the Construction/Remedial Action Work Plan). Implementation of this protocol is underway.	The protocol for implementing CUL-1a-13 was included in Appendix P of the C/RAWP, which was submitted on November 18, 2015.

TABLE L1.1-1
Summary of Compliance with EIR Mitigation Measures
Groundwater Remedy Basis of Design Report/Final (100%) Design
PG&E Topock Compressor Station, Needles, California

Resources	Mitigation Number	Mitigation Measure	Which document(s) will contain or satisfy this measure?[1]	Action (Compliance Status)				Date Completed
				Preliminary (30%) Design	Intermediate (60%) Design	Pre-Final (90%)/Supplemental 90% Design	Final (100%) Design	
Cultural Resources	CUL-1b and 1c	**During Design, Construction, O&M, and Decommissioning Consider the Location of Historical Resources and Implement Measures to Avoid Resources to the Extent Feasible.** The following actions will reduce the potential for impacts on identified historically significant resources (other than the Topock Cultural Area, which is separately addressed in CUL-1a) within the project area. As detailed below, these actions include consideration of the location of historical resources, preparation of a cultural resources study, and preparation of a treatment plan. Monitoring of ground-disturbing activities during project construction will further protect historically significant resources. Protective actions are also described pertaining to the discovery of any previously unidentified potentially significant cultural resources.	Design submittals	This mitigation measure will be met through actions taken to implement CUL-1b/c-1 through c-4 (see below). In addition, the aerial map of disturbed areas (CUL-1a-9) provides a first cut at protecting and avoiding archaeological and historical sites.	This mitigation measure will be met through actions taken to implement CUL-1b/c-1 through c-4 (see below). In addition, the aerial map of disturbed areas (CUL-1a-9) provides a first cut at protecting and avoiding archaeological and historical sites. PG&E remediation resources specialist Glenn Caruso participated in field reviews of planned remedial facilities with the design team on April 23-24 and June 20, 2012. The purpose of these field reviews along with in office reviews is to ensure that the footprints of planned facilities are designed in ways to avoid, minimize, or mitigate impacts on historical and archaeological resources to the maximum extent feasible.	This mitigation measure will be met through actions taken to implement CUL-1b/c-1 through c-4 (see below). In addition, the aerial map of disturbed areas (CUL-1a-9) provides a first cut at protecting and avoiding archaeological and historical sites. PG&E Cultural Resources Expert Glenn Caruso participated in field review of planned remedial facilities and temporary construction footprints with the design team on April 7-10, 2014. Glenn Caruso also led in-office reviews of planned facilities and temporary construction-related footprints. The purpose of the field review along with in-office reviews is to ensure that project footprints are designed in ways to avoid, minimize, or mitigate impacts on historical and archaeological resources to the maximum extent feasible.	This mitigation measure will be met through actions taken to implement CUL-1b/c-1 through c-4 (see below). In addition, the aerial map of disturbed areas (CUL-1a-9) provides a first cut at protecting and avoiding archaeological and historical sites. PG&E Cultural Resources Expert Glenn Caruso participated in field review of planned remedial facilities and temporary construction footprints at Moabi Regional Park in late 2014 and early 2015. Glenn Caruso also led in-office review of planned facilities and temporary construction-related footprints in September 2015. The purpose of the field review along with in-office reviews is to ensure that project footprints are designed in ways to avoid and minimize impacts on historical and archaeological resources to the maximum extent feasible.	
Cultural Resources	CUL-1b/c-1	PG&E shall consider the locations of the identified historic resources described above (EIR Table 4.4-3) during the design of the physical improvements necessary for the proposed project and avoid, minimize, or mitigate impacts on historical and archaeological resources to the maximum extent feasible, as determined by DTSC. The final design plans for the project will be submitted to DTSC for review and approval.	Design submittals	The design has been and is carried out to avoid impacts to historical and archaeological resources to the maximum extent practicable as determined by DTSC. The final design will be submitted to DTSC as directed.	PG&E remediation resources specialist Glenn Caruso participated in field reviews of planned remedial facilities with the design team on April 23-24 and June 20, 2012. The purpose of these field reviews along with in office reviews is to ensure that the footprints of planned facilities are designed in ways to avoid, minimize, or mitigate impacts on historical and archaeological resources to the maximum extent feasible.	PG&E Cultural Resources Expert Glenn Caruso participated in field review of planned remedial facilities and temporary construction footprints with the design team on April 7-10, 2014. Glenn Caruso also led in-office reviews of planned facilities and temporary construction-related footprints. The purpose of the field review along with in-office reviews is to ensure that project footprints are designed in ways to avoid, minimize, or mitigate impacts on historical and archaeological resources to the maximum extent feasible. As noted above under CUL-1a-3a, on December 2, 2014, AE as PG&E's Qualified Cultural Resource Consultant conducted archaeological and historical field surveys of the locations considered for project features in Moabi Regional Park. A brief summary of the survey results was included in Appendix A11 of the Supplemental 90%.	As noted above under CUL-1a-3a, on June 24-26, 2015, PG&E conducted field surveys of the additional locations considered for remedy features in Moabi Regional Park. Survey results were summarized in a technical memorandum submitted on September 2, 2015. PG&E Cultural Resources Expert Glenn Caruso participated in field review of planned remedial facilities and temporary construction footprints at Moabi Regional Park in late 2014 and early 2015. Glenn Caruso also led in-office review of planned facilities and temporary construction-related footprints in September 2015. The purpose of the field review along with in-office reviews is to ensure that project footprints are designed in ways to avoid and minimize impacts on historical and archaeological resources to the maximum extent feasible.	The final design was submitted on November 18, 2015.

TABLE L1.1-1
Summary of Compliance with EIR Mitigation Measures
Groundwater Remedy Basis of Design Report/Final (100%) Design
PG&E Topock Compressor Station, Needles, California

Resources	Mitigation Number	Mitigation Measure	Which document(s) will contain or satisfy this measure?[1]	Action (Compliance Status)				Date Completed
				Preliminary (30%) Design	Intermediate (60%) Design	Pre-Final (90%)/Supplemental 90% Design	Final (100%) Design	
Cultural Resources	CUL-1b/c-2	During preparation of the final design, and consistent with CUL-1 a-3, PG&E shall retain a Qualified Cultural Resources Consultant to prepare a cultural resources study that assesses the potential for the construction, operations, or decommissioning of specific proposed improvements to result in significant impacts on identified historically significant resources described in Impacts CUL-1b and CUL-1c. This may include a geoarchaeological investigation and/or non-destructive remote-sensing surveys of potentially disturbed areas to determine if a potential exists for buried historical and archaeological resources. "Significant impacts" as used here means the potential for construction to demolish or materially alter in an adverse manner those physical characteristics of a resource that convey its historical significance and that justify its inclusion in, or eligibility for, inclusion in the CRHR. The study will be submitted to DTSC for review and evaluation to determine if existing mitigation measures are appropriate.	Cultural resources study/Geoarchaeological investigation report	Consistent with CUL-1a-3, PG&E has retained qualified cultural resources consultants to prepare a cultural resources study. The study will commence at the intermediate (60%) design stage, after the locations of remedial facilities are confirmed.	This measure was discussed with interested Tribes at the monthly meeting on April 26, 2012. Geoarchaeological investigations were conducted on June 5-8, 2012 by Dr. Roland Brady of Brady and Associates Geological Services (BAGS) and Pat Maloney of Applied Earthworks (AE); Pat Maloney is the qualified cultural resources consultant. Participants from Interested Tribes include Wirlene Fischer-Holt (CRIT), Dr. Leo Leonhart (Consultant to the FMIT), and Dr. Margaret Eggers (TRC). A geoarchaeological investigation report is forthcoming.	The geoarchaeological investigation report titled *Geoarchaeological Assessment for the Topock Remediation Project, Mohave County, AZ, and San Bernardino County, CA* was completed and submitted to DTSC on February 28, 2014 (BAGS and AE 2014). The information in this report has been used to inform the design (i.e., via reviews by PG&E Cultural Resources Expert) and incorporated into the Construction/Remedial Action Work Plan as protocols to be followed during construction activities (Section 4).	The *Geoarchaeological Assessment for the Topock Remediation Project, Mohave County, AZ, and San Bernardino County, CA* was revised to incorporate comments from DTSC. The report was submitted on September 15, 2015 (BAGS and AE 2015). The information in the report has been used to inform the design (i.e., via reviews by PG&E Cultural Resources Expert) and incorporated into the Construction/Remedial Action Work Plan as protocols to be followed during construction activities (Section 4).	The revised geoarchaeological investigation report (BAGS and AE 2015) was completed on September 15, 2015, and included in Appendix A12 of the Final BOD and T of the C/RAWP. The C/RAWP was submitted concurrently with the final design on November 18, 2015.
Cultural Resources	CUL-1b/c-3	If the cultural resources study determines that the construction of physical improvements would result in significant impacts on identified historically significant resources described in Impacts CUL-1b and CUL-1c, and avoidance of the resource is not feasible, PG&E shall prepare a treatment plan that identifies measures to reduce these impacts (see above description of the CIMP) for DTSC's review and approval. The treatment plan shall identify which criteria for listing on the CRHR contribute to the affected resource's significance and which aspects of significance would be materially altered by construction, operations, or decommissioning and shall provide for reasonable efforts to be made to permit the resource to be preserved in place or left in an undisturbed state. Methods of accomplishing this may include capping or covering the resource with a layer of soil. To the extent that a resource cannot feasibly be preserved in place or left in an undisturbed state, excavation as mitigation shall be restricted to those parts of the resource that would be damaged or destroyed by the project. Excavation as mitigation shall not be required for a historically significant resource if the treatment plan determines that testing or studies already completed have adequately recovered the scientifically consequential information from and about the resource. The plan shall require communication with all Interested Tribes with regard to their perspectives and wishes for the treatment of the resources.	Cultural resources treatment plan	Implementation of this measure is dependent upon the cultural resources study conducted under CUL-1b/c-2.	This measure was discussed with Interested Tribes at the monthly meeting on October 25, 2012 and November 9, 2012.	A Cultural Resources Treatment Plan will be prepared and submitted to DTSC shortly after submission of the 90% design.	A Cultural and Historical Property Treatment Plan, which includes a requirement to communicate with all Interested Tribes with respect to their perspectives and wishes for the treatment of resources, was prepared and submitted to DTSC on September 12, 2014 (AE 2014b).	A Cultural and Historical Property Treatment Plan was prepared and submitted to DTSC on September 12, 2014 (AE 2014b).

TABLE L1.1-1
Summary of Compliance with EIR Mitigation Measures
Groundwater Remedy Basis of Design Report/Final (100%) Design
PG&E Topock Compressor Station, Needles, California

Resources	Mitigation Number	Mitigation Measure	Which document(s) will contain or satisfy this measure?[1]	Action (Compliance Status)				Date Completed
				Preliminary (30%) Design	Intermediate (60%) Design	Pre-Final (90%)/Supplemental 90% Design	Final (100%) Design	
Cultural Resources	CUL-1b/c-4	Consistent with CUL-1a-3a above, PG&E shall retain a Qualified Cultural Resources Consultant to observe ground-disturbing activities and shall be required to request the participation of Tribal monitors during those activities, including steps necessary during operations and decommissioning activities to ensure that historically significant resources are avoided to the maximum extent feasible, as determined by DTSC, during actual construction (see the description of the CMI Workplan, above). The Qualified Cultural Resources Consultant shall provide training to construction personnel on the locations of identified resources, values associated with the identified resources, responsibility for reporting suspected historic resources, and procedures for suspension of work in the immediate vicinity of the discovery, and shall use exclusionary fencing, flagging, or other appropriate physical barriers to mark the boundaries of identified resources. The Qualified Cultural Resources Consultant shall invite participation from Interested Tribal members to participate in the training. In the event that previously unidentified potentially significant cultural resources are discovered during ground-disturbing activities, the Qualified Cultural Resources Consultant shall have the authority to divert or temporarily halt ground-disturbing activities in the area of discovery to allow evaluation of the potentially significant cultural resources. If such discoveries occur on land managed by a federal agency, Stipulation IX (Discoveries) of the Programmatic Agreement shall apply and are deemed adequate by DTSC. If a discovery occurs on other lands within the project area, the Qualified Cultural Resources Consultant shall contact the PG&E and DTSC project managers at the time of discovery and, in consultation with DTSC and Tribal monitors, shall evaluate the resource before construction activities will be allowed to resume in the affected area. For significant cultural resources, and before construction activities are allowed to resume in the affected area, the resource(s) shall be recovered with coordination of the Tribal monitors and DTSC. Recovery may include a Research Design and/or Data Recovery Program submitted to DTSC for review and approval. The Qualified Cultural Resources Consultant (and Tribal monitors) shall determine the amount of material to be recovered for an adequate sample for analysis or data recovery. Any concerns or recommendations regarding the ground-disturbing activities or the handling of cultural resources shall be directed to the Qualified Cultural Resources Consultant or PG&E's site supervisor.		Consistent with CUL-1a-3, PG&E has retained qualified cultural resources consultants to observe ground-disturbing activities and provide training as required.	Consistent with CUL-1a-3, PG&E has retained AE, a consulting firm with qualified cultural resources consultants, to observe ground-disturbing activities and provide training as required. This measure was discussed with Interested Tribes at the monthly meeting on October 25, 2012 and November 9, 2012.	Consistent with CUL-1a-3, PG&E has retained AE, a consulting firm with qualified cultural resources consultants, to observe ground-disturbing activities and provide training as required.	Consistent with CUL-1a-3, PG&E has retained AE, a consulting firm with qualified cultural resources consultants, to observe ground-disturbing activities and provide training as required. PG&E has included the requirement to request participation of Tribal monitors during those activities in CIMP Section 2.12.	PG&E retained AE, which DTSC determined was a Qualified Cultural Resources Consultant, on March 2, 2012.

TABLE L1.1-1
Summary of Compliance with EIR Mitigation Measures
Groundwater Remedy Basis of Design Report/Final (100%) Design
PG&E Topock Compressor Station, Needles, California

Resources	Mitigation Number	Mitigation Measure	Which document(s) will contain or satisfy this measure?[1]	Action (Compliance Status)				Date Completed
				Preliminary (30%) Design	Intermediate (60%) Design	Pre-Final (90%)/Supplemental 90% Design	Final (100%) Design	
Cultural Resources	CUL-2	**During Project Design Consider the Location of Unique Archaeological Resources and Avoid Resources to the Maximum extent Feasible.** Cultural resources that qualify as unique archaeological sites in the project area would probably also meet one or more of the criteria for historical resources and would be subject to Mitigation Measures CUL-1b/c-2 and CUL-1b/c-3. The mitigation measures under this identified impact are the same as listed for Impact CUL-1b and CUL-1c. These mitigation measures would reduce the potential for impacts on unique archaeological resources.	Cultural resources study/ Geoarchaeological investigation report; Cultural resources treatment plan	The requirements of this mitigation measure will be met by implementation of CUL-1b/c-2 and CUL-1b/c-3.	The requirements of this mitigation measure will be met by implementation of CUL-1b/c-2 and CUL-1b/c-3. This measure was discussed with interested Tribes at the monthly meeting on May 24, 2012.	The requirements of this mitigation measure have been met by implementation of CUL-1b/c-2 and CUL-1b/c-3.	The requirements of this mitigation measure have been met by implementation of CUL-1b and CUL-1c.	See CUL-1b and CUL-1c.
Cultural Resources	CUL-3	**Conduct Survey and Construction Monitoring**. A **paleontological investigation**, **including a detailed survey of the project area** by a qualified paleontologist, shall be conducted to refine the potential impacts on unique paleontological resources within the final design area and determine whether preconstruction recovery of sensitive resources and/or construction monitoring would be warranted. If construction monitoring is determined to be warranted, ground-altering activity would be monitored by a qualified paleontologist to assess, document, and recover unique fossils. Monitoring shall include the inspection of exposed surfaces and microscopic examination of matrix in potential fossil bearing formations. In the event microfossils are discovered, the monitor shall collect matrix for processing. In the event paleontological resources are encountered during earthmoving activities, recovered specimens shall be prepared by the paleontologist to a point of identification and permanent preservation. PG&E shall retain a Qualified Paleontologist to observe ground-disturbing activities where determined necessary based on the results of the paleontological investigation and shall be required to request the participation of Tribal monitors during those activities, including steps necessary during operations and decommissioning activities to ensure that historically significant resources are avoided to the maximum extent feasible, as determined by DTSC, during actual construction (see above description of the CMI Workplan). Paleontological resources of scientific value shall be identified and curated into an established, accredited, professional museum repository in the region with permanent retrievable paleontological storage. This measure does not apply to the activities included as part of the East Ravine Revised Addendum, Groundwater Investigation.	Paleontological investigation report	PG&E has retained a paleontologist to conduct the investigation, planning for this investigation is currently underway. A draft report has been prepared and is being reviewed by PG&E.	This measure was discussed with interested Tribes at the monthly meeting on January 26, 2012. A paleontological investigation was conducted on July 25, 2012. The outcome of the survey was provided in a report completed in December 2012; this report is currently being revised to incorporate comments received.	The paleontological investigation results were summarized in a report titled "*Paleontological Resources Management Plan: MMRP CUL-3*" (Parus 2014) and submitted to DTSC on February 28, 2014. The plan is also included in an appendix of the Construction/Remedial Action Work Plan.	The *Paleontological Resources Management Plan: MMRP CUL-3* was revised to incorporate DTSC's comments and submitted on October 9. 2015 and is included in Appendix A9 of this report. The plan is also included in Appendix J of the Construction/Remedial Action Work Plan. As a result of the July 2012 survey, the paleontologist determined that paleontological monitoring would not be required during grading and trenching activities. Even though borings would have a low potential to produce significant fossils, the paleontologist recommended that paleontological resources awareness training be completed by field personnel and that a paleontologist be on call to respond if fossils are encountered during drilling. PG&E has hired Qualified Paleontologists from AE to be on call during construction activities. See CUL-1a-8l for provisions related to Tribal Monitors during ground-disturbing activities.	The revised paleontological investigation report (Parus 2015) was completed on October 9, 2015, and included in Appendices A9 of the Final BOD and J of the C/RAWP, respectively.

TABLE L1.1-1
Summary of Compliance with EIR Mitigation Measures
Groundwater Remedy Basis of Design Report/Final (100%) Design
PG&E Topock Compressor Station, Needles, California

Resources	Mitigation Number	Mitigation Measure	Which document(s) will contain or satisfy this measure?[1]	Action (Compliance Status)				Date Completed
				Preliminary (30%) Design	Intermediate (60%) Design	Pre-Final (90%)/Supplemental 90% Design	Final (100%) Design	
Cultural Resources	CUL-4	**With Discovery of Human Remains or Burials Suspend Work, Protect Remains, and Comply with Local, State, and Federal Laws Regarding Discoveries During Ground-Disturbing Activities.** Ground-disturbing activities may disturb as-yet undiscovered human remains or Native American burials and associated grave goods. PG&E shall retain a Qualified Cultural Resource Consultant and request designated Tribal monitor(s) to train construction personnel in the identification of human remains so that they may aid in the identification of such resources (see above description of the CIMP). A Qualified Cultural Resource Consultant and Tribal monitor(s) shall be in place to adequately oversee all ground-disturbing activities. In the event human remains are uncovered over the course of project construction, operation and maintenance, and/or decommissioning activities, the following procedures shall be followed to ensure compliance with all applicable local, state, and federal laws.	Training material for the identification of human remains	PG&E will retain Qualified Cultural Resources Consultants prior to construction to prepare training material for the identification of human remains, provide training and oversee ground-disturbing activities as required. All of the provisions of this measure will remain in effect during construction, and will be implemented as directed in the event any human remains are uncovered during construction.	PG&E has retained AE and prior to construction monitoring AE will prepare training material for the identification of human remains, provide training and oversee ground-disturbing activities as required by this mitigation measure. All of the provisions of this measure will remain in effect during construction, and will be implemented as directed in the event any human remains are uncovered during construction.	PG&E has retained AE as the qualified cultural resource consultant and prior to construction monitoring, AE will prepare training material for the identification of human remains, provide training, and oversee ground-disturbing activities as required by this mitigation measure. All of the provisions of this measure will remain in effect during construction, and will be implemented as directed in the event any human remains are uncovered during construction. Procedures for implementing this measure are included in an appendix of the Construction/Remedial Action Work Plan.	PG&E has retained AE as the qualified cultural resource consultant and prior to construction monitoring, AE will prepare training material for the identification of human remains and provide the training required by this mitigation measure. PG&E also will request designated Tribal monitors to train construction personnel in the identification of human remains. AE and the Tribal monitors shall be in place to oversee ground disturbing activities. These requirements are in Appendix P of the C/RAWP. All of the provisions of this measure will remain in effect during construction, and will be implemented as directed in the event any human remains are uncovered during construction.	Procedures for implementing this measure are included in Appendix P of the Construction/Remedial Action Work Plan, submitted on November 18, 2015.
Cultural Resources	CUL-4f	f) The construction contractor shall immediately suspend work within the vicinity of the discovery and determine if the remains discovered are human or nonhuman. This determination shall be made by the Qualified Cultural Resources Consultant, a qualified archaeologist and/or physical anthropologist with expert skill in the identification of human osteological (bone) remains.	Construction/Remedial Action Work Plan; Plan for Decommissioning and Removal of IM-3 Facility and Site Restoration; Plan for Decommissioning of Remedy Facilities and Restoration	This requirement will be met by actions to be taken under CUL-4.	This requirement will be met by actions to be taken under CUL-4.	This requirement will be met by actions taken under CUL-4.	The training and monitoring required by CUL-4 will ensure that this requirement is met.	This measure was incorporated into the O&M Manual (see Exhibit L2.2-1), the C/RAWP (see Table 2.3-1), and the IM-3 Decommissioning Plan (see Table 6-1). These documents were submitted on November 18, 2015.
Cultural Resources	CUL-4g	g) The Qualified Cultural Resources Consultant (and Tribal monitor), or construction contractor, shall protect discovered human remains and/or burial goods remaining in the ground from additional disturbance.	Construction/Remedial Action Work Plan; Plan for Decommissioning and Removal of IM-3 Facility and Site Restoration; Plan for Decommissioning of Remedy Facilities and Restoration	This requirement will be met by actions to be taken under CUL-4.	This requirement will be met by actions to be taken under CUL-4.	This requirement will be met by actions taken under CUL-4.	This requirement was incorporated into the O&M Manual (see Exhibit L2.2-1), the C/RAWP (see Table 2.3-1), and the IM-3 Decommissioning Plan (see Table 6-1). Further, the training and monitoring required by CUL-4 will ensure that this requirement is met.	This measure was incorporated into the O&M Manual (see Exhibit L2.2-1), the C/RAWP (see Table 2.3-1), and the IM-3 Decommissioning Plan (see Table 6-1). These documents were submitted on November 18, 2015.

TABLE L1.1-1
Summary of Compliance with EIR Mitigation Measures
Groundwater Remedy Basis of Design Report/Final (100%) Design
PG&E Topock Compressor Station, Needles, California

Resources	Mitigation Number	Mitigation Measure	Which document(s) will contain or satisfy this measure?[1]	Action (Compliance Status)				Date Completed
				Preliminary (30%) Design	Intermediate (60%) Design	Pre-Final (90%)/Supplemental 90% Design	Final (100%) Design	
Cultural Resources	CUL-4h	h) The Qualified Cultural Resources Consultant, archaeologist, or construction site supervisor shall contact the San Bernardino County Coroner, and the PG&E and DTSC project managers immediately. In California, all subsequent action shall conform to the protocols established in the Health and Safety Code and regulations. In Arizona, the Qualified Cultural Resources Consultant or PG&E construction site supervisor will follow Arizona laws and the implementing regulations. Human remains found on federal land would require the notification of the BLM Havasu City field office and compliance with applicable federal laws and regulations, including the Native American Graves Protection and Repatriation Act if the remains are determined to be of Native American origin. The Qualified Cultural Resources Consultant shall coordinate the interaction between Interested Tribes, PG&E, the County, and DTSC to determine proper treatment and disposition of any remains.	Construction/Remedial Action Work Plan; Plan for Decommissioning and Removal of IM-3 Facility and Site Restoration; Plan for Decommissioning of Remedy Facilities and Restoration	This requirement will be met by actions to be taken under CUL-4.	This requirement will be met by actions to be taken under CUL-4.	This requirement will be met by actions taken under CUL-4.	These requirements were incorporated into the O&M Manual (see Exhibit L2.2-1), the C/RAWP (see Table 2.3-1), and the IM-3 Decommissioning Plan (see Table 6-1). The training and monitoring required by CUL-4 will ensure that this requirement is met.	This measure was incorporated into the O&M Manual (see Exhibit L2.2-1), the C/RAWP (see Table 2.3-1), and the IM-3 Decommissioning Plan (see Table 6-1). These documents were submitted on November 18, 2015.
Cultural Resources	CUL-4i	i) The San Bernardino County Coroner will determine if the remains are of recent origin and if an investigation of the cause of death is required (California Health and Safety Code Section 7050.5). If the coroner determines that the human remains are not Native American and not evidence of a crime, project personnel shall coordinate with the Qualified Cultural Resources Consultant (s) to develop an appropriate treatment plan. This may include contacting the next of kin to solicit input on subsequent disposition of the remains. If there is no next-of-kin, or recommendations by the next-of-kin are considered unacceptable by the landowner, the landowner will reinter the remains with appropriate dignity in a location outside the project area and where they would be unlikely to be disturbed in the future.	Construction/Remedial Action Work Plan; Plan for Decommissioning and Removal of IM-3 Facility and Site Restoration; Plan for Decommissioning of Remedy Facilities and Restoration	This requirement will be met by actions to be taken under CUL-4.	This requirement will be met by actions to be taken under CUL-4.	This requirement will be met by actions taken under CUL-4.	These requirements were incorporated into the O&M Manual (see Exhibit L2.2-1), the C/RAWP (see Table 2.3-1), and the IM-3 Decommissioning Plan (see Table 6-1). The training and monitoring required by CUL-4 will ensure that this requirement is met.	This measure was incorporated into the O&M Manual (see Exhibit L2.2-1), the C/RAWP (see Table 2.3-1), and the IM-3 Decommissioning Plan (see Table 6-1). These documents were submitted on November 18, 2015.
Cultural Resources	CUL-4j	j) In the event that the San Bernardino County Coroner determines that the human remains are Native American and not evidence of a crime, project personnel shall contact the NAHC so that a most likely descendent (MLD) can be identified as required under California Public Resources Code Section 5097.98.	Construction/Remedial Action Work Plan; Plan for Decommissioning and Removal of IM-3 Facility and Site Restoration; Plan for Decommissioning of Remedy Facilities and Restoration	This requirement will be met by actions to be taken under CUL-4.	This requirement will be met by actions to be taken under CUL-4.	This requirement will be met by actions taken under CUL-4.	This requirement was incorporated into the O&M Manual (see Exhibit L2.2-1), the C/RAWP (see Table 2.3-1), and the IM-3 Decommissioning Plan (see Table 6-1). The training and monitoring required by CUL-4 will ensure that this requirement is met.	This measure was incorporated into the O&M Manual (see Exhibit L2.2-1), the C/RAWP (see Table 2.3-1), and the IM-3 Decommissioning Plan (see Table 6-1). These documents were submitted on November 18, 2015.

TABLE L1.1-1
Summary of Compliance with EIR Mitigation Measures
Groundwater Remedy Basis of Design Report/Final (100%) Design
PG&E Topock Compressor Station, Needles, California

Resources	Mitigation Number	Mitigation Measure	Which document(s) will contain or satisfy this measure?[1]	Action (Compliance Status)				Date Completed
				Preliminary (30%) Design	Intermediate (60%) Design	Pre-Final (90%)/Supplemental 90% Design	Final (100%) Design	
Cultural Resources	CUL-4k	k) The MLD(s) shall inspect the area in which the human remains were found and provide treatment recommendations to the landowner and PG&E site manager in accordance with the provisions of PRC Section 5097.98. The treatment may include reburial, scientific removal of the discovered human remains and relinquishment to the MLD(s), nondestructive analysis of human remains and/or other culturally appropriate treatment. If the MLD(s) so requests, the landowner would reinter the remains with the appropriate dignity in a location outside the area of disturbance in a location unlikely to be disturbed in the future.	Construction/Remedial Action Work Plan; Plan for Decommissioning and Removal of IM-3 Facility and Site Restoration; Plan for Decommissioning of Remedy Facilities and Restoration	This requirement will be met by actions to be taken under CUL-4.	This requirement will be met by actions to be taken under CUL-4.	This requirement will be met by actions taken under CUL-4.	This requirement was incorporated into the O&M Manual (see Exhibit L2.2-1), the C/RAWP (see Table 2.3-1), and the IM-3 Decommissioning Plan (see Table 6-1). The training and monitoring required by CUL-4 will ensure that this requirement is met.	This measure was incorporated into the O&M Manual (see Exhibit L2.2-1), the C/RAWP (see Table 2.3-1), and the IM-3 Decommissioning Plan (see Table 6-1). These documents were submitted on November 18, 2015.
Cultural Resources	CUL-4l	l) To the maximum extent feasible, Mitigation Measure CUL-4 shall be implemented in a manner that is consistent with mitigation required by local, state, and federal requirements.	Construction/Remedial Action Work Plan; Plan for Decommissioning and Removal of IM-3 Facility and Site Restoration; Plan for Decommissioning of Remedy Facilities and Restoration	This requirement will be met by actions to be taken under CUL-4.	This requirement will be met by actions to be taken under CUL-4.	This requirement will be met by actions to be taken under CUL-4.	This requirement was incorporated into the O&M Manual (see Exhibit L2.2-1), the C/RAWP (see Table 2.3-1), and the IM-3 Decommissioning Plan (see Table 6-1). The training and monitoring required by CUL-4 will ensure that this requirement is met.	This measure was incorporated into the O&M Manual (see Exhibit L2.2-1), the C/RAWP (see Table 2.3-1), and the IM-3 Decommissioning Plan (see Table 6-1). These documents were submitted on November 18, 2015.
Geology & Soils	**GEO-1a**	**Construction, Operation and Maintenance, and Decommissioning Impacts Related to Erosion of Soils.**						
Geology & Soils	GEO-1a-a	a) A DTSC-approved grading and erosion control plan, prepared by a California Registered Civil Engineer, shall be completed prior to implementation of any grading in areas of the site where there is a potential for substantial erosion or loss of top soils. The plan shall outline specific procedures for controlling erosion or loss of topsoil during construction, operation and maintenance, and decommissioning.	Construction/Remedial Action Work Plan; Plan for Decommissioning and Removal of IM-3 Facility and Site Restoration; Plan for Decommissioning of Remedy Facilities and Restoration; O&M Manual	A grading and erosion control plan will be prepared and included in the Construction/Remedial Action Work Plan for DTSC review and approval.	A grading and erosion control plan will be prepared and included in the Construction/Remedial Action Work Plan, which will be submitted as part of the final design for DTSC review and approval.	Grading plans including erosion control are included in Appendix D of the 90% BOD. Erosion control measures to be implemented during construction are also included in the Construction/Remedial Action Work Plan.	Grading plans including specific erosion control procedures were prepared by a California registered engineer and are included in Appendix D of this Final BOD. In addition to the grading and erosion control plan(s) required by this measure, other measures to control soil erosion are included in: • The Final BOD (Appendix C – Design Criteria). • The C/RAWP (Appendix F – IM-3 Decommissioning Work Plan [Appendix G, Construction BMPs Plan] and Appendix M – BMPs Plan). • Volume 1 of the O&M Manual (Appendix B – SOPs, Appendix D – SWPPP for O&M activities, and Section 7.4 – BMPs for maintenance of roads and access pathways). • Volume 2 of the O&M Manual (Appendix A – SOPs). These are discussed below as well.	The grading and erosion control plan (Appendix D of the BOD) was submitted on November 18, 2015.

TABLE L1.1-1
Summary of Compliance with EIR Mitigation Measures
Groundwater Remedy Basis of Design Report/Final (100%) Design
PG&E Topock Compressor Station, Needles, California

Resources	Mitigation Number	Mitigation Measure	Which document(s) will contain or satisfy this measure?[1]	Action (Compliance Status)				Date Completed
				Preliminary (30%) Design	Intermediate (60%) Design	Pre-Final (90%)/Supplemental 90% Design	Final (100%) Design	
Geology & Soils	GEO-1a-b	b) To ensure soils do not directly or indirectly discharge sediments into surface waters as a result of construction, operation and maintenance, or decommission activities, PG&E shall develop a SWPPP as discussed in mitigation measure HYDRO-1 of the "Hydrology and Water Quality" section of this EIR. The SWPPP shall identify best management practices (BMPs) that would be used to protect stormwater runoff and minimize erosion during construction. PG&E shall prepare plans to control erosion and sediment, prepare preliminary and final grading plans, and shall prepare plans to control urban runoff from the project site during construction, consistent with the substantive requirements of the San Bernardino County Building and Land Use Services Department for erosion control.	Construction/Remedial Action Work Plan; Plan for Decommissioning and Removal of IM-3 Facility and Site Restoration; Plan for Decommissioning of Remedy Facilities and Restoration	PG&E will prepare a BMP Plan prior to construction activities that will be included in the Construction/Remedial Action Work Plan.	PG&E will prepare a BMP Plan prior to construction activities that will be included in the Construction/Remedial Action Work Plan, to be submitted concurrently with the 90% design.	In compliance with mitigation measure HYDRO-1, a BMPs Plan for construction activities was prepared and is included in Section 4.10 of the Construction/Remedial Action Work Plan, as well as an appendix. In addition, an industrial SWPPP was also prepared in compliance with mitigation measure HYDRO-1 and included in Appendix E of the O&M Plan (Volume 1 of the O&M Manual). The SWPPP includes BMPs related to operation and maintenance activities of the remedy.	In compliance with mitigation measure HYDRO-1, PG&E developed a BMPs Plan to minimize erosion during construction activities (see HYDRO-1). This is included in Section 4.10 of the Construction/Remedial Action Work Plan, as well as Appendix M to the C/RAWP. PG&E will follow the General SWPPP for all construction activities. In addition, PG&E has prepared plans to control erosion and sediment runoff, consistent with the County's erosion control requirements, requiring the use of BMPs during construction, operations, and decommissioning. The BMPs for construction activities are located in Appendix G to the IM-3 Decommissioning Plan and Appendix M of the C/RAWP. The SWPPP (including BMPs) for operation and maintenance activities is included in Appendix E of the O&M Plan (Volume 1 of the O&M Manual). In addition, PG&E has prepared grading plans, which are included in Appendix D of this Final BOD.	Appendix G to the IM-3 Decommissioning Plan and Appendix M of the C/RAWP include BMPs to protect storm water runoff and minimize erosion during decommissioning and construction, respectively. In addition, a SWPPP for O&M activities was prepared and included in Appendix D of the O&M Manual Volume 1. The O&M Manual and the C/RAWP (which includes the IM-3 Decommissioning Plan) were submitted on November 18, 2015.
Geology & Soils	GEO-1a-c	c) During road preparation activities, loose sediment shall be uniformly compacted consistent with the substantive San Bernardino County Building and Land Use Services Department requirements to aid in reducing wind erosion. Ongoing road maintenance including visual inspection to identify areas of erosion and performing localized road repair and regrading, installation and maintenance of erosion control features such as berms, silt fences, or straw wattles, and grading for road smoothness shall be performed as needed to reduce potential for erosion.	Construction/Remedial Action Work Plan; Plan for Decommissioning and Removal of IM-3 Facility and Site Restoration; Plan for Decommissioning of Remedy Facilities and Restoration	This measure will be implemented as directed, to aid in reducing wind erosion.	This measure will be implemented as directed to aid in reducing wind erosion.	This measure will be implemented as directed to aid in reducing wind erosion (see BMPs Plan, in Section 4.10 and an appendix of the Construction/Remedial Action Work Plan). Section 6.4 of the O&M Plan (Volume 1 of the O&M Manual) discusses general guidelines for maintenance of access roads and pathways, from visual assessment, local repairs, soil stabilization, and installation/ maintenance of erosion controls, to grading.	The requirements, consistent with County requirements, to uniformly compact loose sediment and to provide ongoing road maintenance (including visual inspection to identify areas of erosion and performing localized road repair and regrading; installation and maintenance of erosion control features such as berms, silt fences, or straw wattles; and grading for road smoothness) to reduce the potential for erosion during road preparation activities have been included as BMPs in the BMPs Plan (Section 4.10 and Appendix M, Section 1.1.3 of the C/RAWP) and are included in Appendix G to the IM-3 Decommissioning Work Plan. This measure will be implemented as directed to aid in reducing wind erosion (see BMPs Plan, in Section 4.10 and an appendix of the Construction/Remedial Action Work Plan). In addition, Section 7.4 of the O&M Plan (Volume 1 of the O&M Manual)	Appendix G to the IM-3 Decommissioning Work Plan and Appendix M of the C/RAWP include BMPs to protect storm water runoff and minimize erosion during decommissioning and construction, respectively. In addition, Section 7.4 of the O&M Manual Volume 1 contains BMPs for ongoing maintenance of roads and pathways. The O&M Manual and the C/RAWP (which includes the IM-3 Decommissioning Work Plan) were submitted on November 18, 2015.

TABLE L1.1-1
Summary of Compliance with EIR Mitigation Measures
Groundwater Remedy Basis of Design Report/Final (100%) Design
PG&E Topock Compressor Station, Needles, California

Resources	Mitigation Number	Mitigation Measure	Which document(s) will contain or satisfy this measure?[1]	Action (Compliance Status)				Date Completed
				Preliminary (30%) Design	Intermediate (60%) Design	Pre-Final (90%)/Supplemental 90% Design	Final (100%) Design	
							discusses general guidelines for maintenance of access roads and pathways, from visual assessment, local repairs, soil stabilization, and installation/maintenance of erosion controls, to grading.	
Geology & Soils	GEO-1a-d	d) Regarding the potential for contaminated soils to be eroded and contribute contamination into receiving waters, Mitigation Measures GEO-2 and HAZ-2 shall be implemented. Mitigation Measure GEO-2 provides the provisions for mitigating erosion through BMPs which shall be implemented. Mitigation Measure HAZ-2 provides the provisions for safe work practices and handling of contaminated soils as investigation derived wastes.	Construction/Remedial Action Work Plan; Plan for Decommissioning and Removal of IM-3 Facility and Site Restoration; Plan for Decommissioning of Remedy Facilities and Restoration	This mitigation measure will be met through actions to be taken to implement Mitigation Measures GEO-2 and HAZ-2 to prevent contaminated soils to be eroded and contribute contamination into receiving waters.	This mitigation measure will be met through actions to be taken to implement Mitigation Measures GEO-2 and HAZ-2 to prevent contaminated soils to be eroded and contribute contamination into receiving waters.	This mitigation measure will be met through actions to be taken to implement Mitigation Measures GEO-2 and HAZ-2 to prevent contaminated soils from being eroded and contributing contamination into receiving waters.	This mitigation measure will be met through implementation of mitigation measure HAZ-2 to prevent contaminated soils from being eroded and contributing contamination into receiving waters.	This mitigation measure was incorporated into the Health and Safety Plan for O&M activities (included as Volume 5 of the O&M Manual) and construction activities (included as Appendix D of the C/RAWP). Both the O&M Manual and C/RAWP were submitted on November 18, 2015.
Geology & Soils	**GEO-1b**	**Construction, Operation and Maintenance, and Decommissioning Impacts Related to Differential Compaction of Soils.**						
Geology & Soils	GEO-1b-a	a) BMPs shall be implemented during construction, operation and maintenance, and decommissioning activities to minimize impacts on the affected areas. Such BMPs could include, but would not be limited to, the following: uniform compaction of roadways created for accessing the project area as per San Bernardino County Building and Land Use Services Department requirements, returning areas adversely affected by differential compaction to preexisting conditions when these areas are no longer needed, and continuing maintenance of access roads, wellhead areas, and the treatment plant areas.	Construction/Remedial Action Work Plan; Plan for Decommissioning and Removal of IM-3 Facility and Site Restoration; Plan for Decommissioning of Remedy Facilities and Restoration	This measure will be implemented as directed. The BMPs will be identified in the Corrective Measure Construction/Remedial Action Work Plan; Plan for Decommissioning and Removal of IM-3 Facility and Site Restoration (part of CIMP); Closure Plan for Decommissioning of Remedy Facilities and Restoration, as appropriate.	This measure will be implemented as directed. The BMPs will be identified in the Construction/Remedial Action Work Plan and Plan for Decommissioning and Removal of IM-3 Facility and Site Restoration which will be submitted as part of the 90% design, as well as the Closure Plan for Decommissioning of Remedy Facilities and Restoration, which will be submitted prior to decommissioning.	This measure will be implemented as directed (see BMPs Plan Section 4.10 and in an appendix of the Construction/Remedial Action Work Plan; Section C2.2, Earthwork, in Appendix C (Design Criteria) of the 90% BOD; and Section 7.4, Access Road and Pathway Maintenance, of the O&M Plan (O&M Manual Volume 1).	BMPs will be implemented as directed (see BMPs Plan in Section 4.10 and Appendix M of the Construction/ Remedial Action Work Plan; Section C2.2, Earthwork, in Appendix C (Design Criteria) of the Final BOD; and Section 7.4, Access Road and Pathway Maintenance, of the O&M Plan (O&M Manual Volume 1).	The BOD, O&M Manual, and the C/RAWP (which includes the IM-3 Decommissioning Work Plan) were submitted on November 18, 2015.
Geology & Soils	GEO-1b-b	b) Work area footprints shall be minimized to the greatest extent feasible to limit the areas exposed to differential compaction. Where possible, existing unpaved access roads and staging/working areas shall be reused and maintained for different stages of the construction. New graded areas for staging or for access roads shall be compacted to a uniform specification, typically on the order of 90 to 95% compaction and consistent with substantive San Bernardino County Building and Land Use Services Department requirements to reduce differential compaction and subsequent erosion of site soils.	Construction/Remedial Action Work Plan; Plan for Decommissioning and Removal of IM-3 Facility and Site Restoration; Plan for Decommissioning of Remedy Facilities and Restoration	This measure will be implemented as directed, to minimize work area footprints to the greatest extent feasible.	This measure will be implemented as directed, to minimize work area footprints to the greatest extent feasible.	This measure has been and will be continue to be implemented as directed. PG&E will strive to minimize work area footprints to the maximum extent feasible, while maintaining a safe work zone and environment for all staffs, contractors, as well as monitors and observers. As discussed in CUL-1a-9, all of the soil storage and construction staging areas proposed in the 90% design are located on existing and/or previously used staging areas, as well as previously disturbed areas. All trench sections underneath roadways and shoulders are designed to be compacted to 95% and all other areas to at least 90%.	This measure has been and will continue to be implemented as directed. PG&E will strive to minimize work area footprints to the maximum extent feasible, while maintaining a safe work zone and environment for all staffs, contractors, as well as monitors and observers. Where possible, PG&E will reuse and maintain existing access routes and staging areas for different stages of construction. As discussed in CUL-1a-9, all of the soil storage and construction staging areas proposed in the final design are located on existing and/or previously used staging areas, as well as previously disturbed areas. Consistent with this measure and GEO-1a-c, all trench sections underneath roadways and shoulders are designed to be compacted to 95% and all other areas to at least 90%.	The O&M Manual and the C/RAWP (which includes the IM-3 Decommissioning Work Plan) were submitted on November 18, 2015.

TABLE L1.1-1
Summary of Compliance with EIR Mitigation Measures
Groundwater Remedy Basis of Design Report/Final (100%) Design
PG&E Topock Compressor Station, Needles, California

Resources	Mitigation Number	Mitigation Measure	Which document(s) will contain or satisfy this measure?[1]	Action (Compliance Status)				Date Completed
				Preliminary (30%) Design	Intermediate (60%) Design	Pre-Final (90%)/Supplemental 90% Design	Final (100%) Design	
Geology & Soils	GEO-1b-c	c) After the completion of the operation and maintenance phase, the disturbed areas which result in increased potential for compaction shall be returned to their respective preexisting condition by regrading consistent with the preconstruction slopes as documented through surveys that may include topographic surveys or photo surveys. The areas will be returned to the surrounding natural surface topography and compacted consistent with unaltered areas near the access roads or staging areas in question. The habitat restoration plan outlined in mitigation measure BIO-1 shall include restoration of native vegetation or other erosion control measures where revegetation would be infeasible or inadequate, for purposes of soil stabilization and erosion control of the project area.	Construction/Remedial Action Work Plan; Plan for Decommissioning and Removal of IM-3 Facility and Site Restoration; Plan for Decommissioning of Remedy Facilities and Restoration	This measure will be implemented as directed. The Habitat Restoration Plan, developed in compliance with BIO-1, will include the requirements under this measure.	This measure will be implemented as directed. The forthcoming Habitat Restoration Plan, to be developed in compliance with BIO-1, will include the requirements under this measure.	**Resurfacing to Preconstruction Condition** These requirements are included in the restoration guidelines for both the Plan for Decommissioning and Removal of the IM-3 Facility and Site Restoration (see Sections 8.1.2 and 8.1.3 of Appendix B of the CIMP) and measure CUL-1a-8e, Protocols for Restoring the Environment to its Preconstruction Conditions (see Sections 2.5.3 and 2.5.4 of the CIMP). **Habitat Restoration and Revegetation** In compliance with BIO-1, the Havasu National Wildlife Refuge Habitat Restoration Plan and the Habitat Restoration Plan for Riparian Vegetation and Other Sensitive Habitats (both provided as appendices to the Construction/ Remedial Action Work Plan) include measures to address restoration of native vegetation.	**Resurfacing to Preconstruction Condition** The requirement to survey sloped areas that will be disturbed by the remedy and return such areas that have an increased potential for compaction to preexisting conditions is included in the restoration guidelines for both the Plan for Decommissioning and Removal of the IM-3 Facility and Site Restoration (see Sections 8.1.2 and 8.1.3 of Appendix B of the CIMP) and measure CUL-1a-8e, Protocols for Restoring the Environment to its Preconstruction Conditions (see Sections 2.5.3 and 2.5.4 of the CIMP). **Habitat Restoration and Revegetation** In compliance with BIO-1, the Havasu National Wildlife Refuge Habitat Restoration Plan and the Habitat Restoration Plan for Riparian Vegetation and Other Sensitive Habitats (both provided as appendices to the Construction/Remedial Action Work Plan) evaluated restoration of native vegetation for the purpose of control erosion. As stated in Section 3.1 of the HNWR Habitat Restoration Plan and Section 2.1 of the Habitat Restoration Plan for Riparian Vegetation and Other Sensitive Habitats, the use of herbaceous vegetation covers as a soil stabilization technique is not being proposed for this project because this approach was not considered appropriate for this environment.	The C/RAWP (includes the CIMP) was submitted on November 18, 2015.

TABLE L1.1-1
Summary of Compliance with EIR Mitigation Measures
Groundwater Remedy Basis of Design Report/Final (100%) Design
PG&E Topock Compressor Station, Needles, California

Resources	Mitigation Number	Mitigation Measure	Which document(s) will contain or satisfy this measure?[1]	Action (Compliance Status)				Date Completed
				Preliminary (30%) Design	Intermediate (60%) Design	Pre-Final (90%)/Supplemental 90% Design	Final (100%) Design	
Hazardous Materials	**HAZ-1a**	**Spills or Releases of Contaminants during Operation and Maintenance Activities.**						
Hazardous Materials	HAZ-1a-a	a) PG&E shall store, handle, and transport hazardous material in compliance with applicable local, state, and federal laws.	O&M Plan (Volume 1 of the O&M Manual)	This measure will be implemented as directed.	This measure will be implemented as directed. Storage and handling of hazardous materials will be discussed in the Hazardous Materials Business Plan (HMBP), the outline for which is presented in Appendix F of the O&M Plan, with the complete HMBP to be submitted as part of the 90% design.	This measure will be implemented as directed. Storage and handling of hazardous materials are discussed in the HMBP (Appendix F of the O&M Plan).	This measure will be implemented as directed. Storage, transport, and handling of hazardous materials are discussed in the HMBP (Appendix E of the O&M Plan) and will be followed during project implementation.	Volume 1 of the O&M Manual was submitted on November 18, 2015.
Hazardous Materials	HAZ-1a-b	b) All chemical storage and loading areas shall be equipped with proper containment and spill response equipment. BMPs to be implemented may include, but are not limited to, use of secondary containment in mixing and storage areas; availability of spill kits and spill containment booms, and appropriate storage containers for containment of the materials generated during the spill response.	O&M Plan (Volume 1 of the O&M Manual)	This measure will be implemented as directed.	This measure will be implemented as directed. Secondary containment for hazardous materials is described in the design criteria and drawings which are presented in Appendices C and D, respectively, of this BOD Report for the 60% design. Storage and handling of hazardous materials will be discussed in the HMBP, the outline for which is presented in Appendix F of the O&M Plan (Volume 1), with the complete HMBP to be submitted as part of the 90% design.	This measure will be implemented as directed. Secondary containment for hazardous materials is described in the design criteria and drawings which are presented in Appendices C and D, respectively, of the BOD Report for the 90% design. Storage and handling of hazardous materials are discussed in the HMBP (Appendix F of the O&M Plan).	This measure will be implemented as directed. The requirement for all chemical loading and storage areas to be equipped with proper containment and spill response equipment is in the design criteria and drawings which are presented in Appendices C and D, respectively, of this Final BOD Report. Storage and handling of hazardous materials are also discussed in the HMBP (Appendix F of the O&M Plan).	The BOD, including Volume 1 of the O&M Manual, was submitted on November 18, 2015.
Hazardous Materials	HAZ-1a-c	c) A project-specific HMBP, chemical standard operating procedure (SOP) protocols and contingency plans shall be developed to ensure that proper response procedures would be implemented in the event of spills or releases. Specifically, the HMBP and SOPs shall describe the procedures for properly storing and handling fuel on-site, the required equipment and procedures for spill containment, required personal protective equipment, and the measures to be used to reduce the likelihood of releases or spills during fueling or vehicle maintenance activities. BMPs to be implemented may include, but are not limited to, use of secondary containment in mixing and storage areas; availability of spill kits and spill containment booms, and appropriate storage containers for containment of the materials generated during the spill response. The field manager in charge of operations and maintenance activities shall be responsible for ensuring that these procedures are followed at all times.	Project-specific HBMP; O&M Plan (Volume 1 of the O&M Manual)	This measure will be implemented as directed. A project-specific HMBP, chemical standard operating procedure (SOP) protocols and contingency plans will be developed to ensure that proper response procedures would be implemented in the event of spills or releases.	This measure will be implemented as directed. Storage and handling of hazardous materials and spill response procedures will be discussed in the HMBP, the outline for which is presented in Appendix F of the O&M Plan (Volume 1), with the complete HMBP to be submitted as part of the 90% design.	This measure will be implemented as directed. Storage and handling of hazardous materials and spill response procedures will be discussed in the HMBP (Appendix F of O&M Plan).	Storage and handling of hazardous materials and spill response procedures are discussed in the HMBP (Appendix E of O&M Plan). The policy for safe fueling and proper handling of fuel on-site and measures to be used to reduce the likelihood of releases or spills during fueling are discussed in the Fuel SOP (Appendix F of the O&M Plan). The requirement to use appropriate personal protective equipment is contained in several locations in the O&M Manual, including Sections 6 and 7 of Volume 1 as well as Volume 5. The field manager in charge of operations and maintenance activities, or his/her designee, will be responsible for ensuring that safety procedures are followed at all times.	The project-specific HBMP was included as Appendix E in Volume 1 of the O&M Manual which was submitted on November 18, 2015.

TABLE L1.1-1
Summary of Compliance with EIR Mitigation Measures
Groundwater Remedy Basis of Design Report/Final (100%) Design
PG&E Topock Compressor Station, Needles, California

Resources	Mitigation Number	Mitigation Measure	Which document(s) will contain or satisfy this measure?[1]	Action (Compliance Status)				Date Completed
				Preliminary (30%) Design	Intermediate (60%) Design	Pre-Final (90%)/Supplemental 90% Design	Final (100%) Design	
Hazardous Materials	**HAZ-1b**	**Spill or Release of Contaminants during Construction and Decommissioning Activities.**						
Hazardous Materials	HAZ-1b-a	a) Fueling areas and maintenance areas would be supplied with proper secondary containment and spill response equipment.	Construction/Remedial Action Work Plan; Plan for Decommissioning and Removal of IM-3 Facility and Site Restoration; Plan for Decommissioning of Remedy Facilities and Restoration	This measure will be implemented as directed. Fueling areas and maintenance areas will be supplied with proper secondary containment and spill response equipment.	This measure will be implemented as directed. Fueling areas and maintenance areas will be supplied with proper secondary containment and spill response equipment. BMPs/SOPs for fueling during construction will be described in the BMP Plan, which will be submitted at the 90% design stage as part of Corrective Measure Construction/Remedial Action Work Plan and Plan for Decommissioning and Removal of IM-3 Facility and Site Restoration.	This measure will be implemented as directed. Fueling areas and maintenance areas will be supplied with proper secondary containment and spill response equipment. BMPs/SOPs for fueling during construction are described in the BMPs Plan in an appendix of the Construction/ Remedial Action Work Plan. Appendix C of the Plan for Decommissioning and Removal of IM-3 Facility and Site Restoration contains a safe fueling and fuel handling policy for activities during implementation of the Work Plan.	This measure will be implemented as directed. Fueling areas and maintenance areas will be supplied with proper secondary containment and spill response equipment. BMPs/SOPs for fueling during construction are described in the BMPs Plan in an appendix of the Construction/ Remedial Action Work Plan. Appendix C of the Plan for Decommissioning and Removal of IM-3 Facility and Site Restoration contains a safe fueling and fuel handling policy for activities during implementation of the Work Plan.	This mitigation measure is addressed in Section 3 of the Revised IM-3 Decommissioning Plan as well as Section 3.2.3.1 and Appendix M of the C/RAWP. Both documents were submitted on November 18, 2015.
Hazardous Materials	HAZ-1b-b	b) PG&E shall develop fueling SOP protocols and a contingency plan that would be implemented at all fueling areas on-site. The SOPs shall describe the procedures for properly storing and handling fuel on-site, the required equipment and procedures for spill containment, required PPE, and the measures to be used to reduce the likelihood of releases or spills during fueling or vehicle maintenance activities. Potential measures include but are not limited to, fuel storage in bermed areas, performing vehicle maintenance in paved and bermed areas, and availability of spill kits for containment and cleanup of petroleum releases. The field manager in charge of construction and decommissioning activities shall be responsible for ensuring that these procedures are followed at all times.	Construction/Remedial Action Work Plan; Plan for Decommissioning and Removal of IM-3 Facility and Site Restoration; Plan for Decommissioning of Remedy Facilities and Restoration	This measure will be implemented as directed. Fueling SOP protocols and a contingency plan will be developed for implementation at fueling areas on-site during construction.	This measure will be implemented as directed. Fueling areas and maintenance areas will be supplied with proper secondary containment and spill response equipment. BMPs/SOPs for fueling during construction will be described in the BMP Plan, which will be submitted at the 90% design stage as part of Corrective Measure Construction/Remedial Action Work Plan and Plan for Decommissioning and Removal of IM-3 Facility and Site Restoration.	This measure will be implemented as directed. Fueling areas and maintenance areas will be supplied with proper secondary containment and spill response equipment. BMPs/SOPs for fueling during construction are described in the BMPs Plan in an appendix of the Construction/Remedial Action Work Plan. Appendix G (Construction BMPs Plan) of the Plan for Decommissioning and Removal of IM-3 Facility and Site Restoration contains BMPs for storage and handling of hazardous materials.	PG&E has developed fueling SOP protocols that meet the requirements of this measure (Appendix F of Volume 1 of the O&M Manual, Appendix B of the C/RAWP, and Appendix C of the Plan for Decommissioning and Removal of IM-3 Facility and Site Restoration).	This mitigation measure was incorporated into Appendix F of Volume 1 of the O&M Manual, Appendix B of the C/RAWP, and Appendix C of the Plan for Decommissioning and Removal of IM-3 Facility and Site Restoration. These documents were submitted on November 18, 2015.
Hazardous Materials	HAZ-1b-c	c) PG&E shall comply with local, state, and federal regulations related to the bulk storage and management of fuels.	Construction/Remedial Action Work Plan; Plan for Decommissioning and Removal of IM-3 Facility and Site Restoration; Plan for Decommissioning of Remedy Facilities and Restoration	This measure will be implemented as directed, for compliance with local, state, and federal regulations related to the bulk storage and management of fuels.	This measure will be implemented as directed. Fueling areas and maintenance areas will be supplied with proper secondary containment and spill response equipment. BMPs/SOPs for fueling during construction will be described in the BMP Plan, which will be submitted at the 90% design stage as part of Corrective Measure Construction/Remedial Action Work Plan and Plan for Decommissioning and Removal of IM-3 Facility and Site Restoration.	This measure will be implemented as directed. Fueling areas and maintenance areas will be supplied with proper secondary containment and spill response equipment. BMPs/SOPs for fueling during construction are described in the BMPs Plan in Section 4 as well as an appendix of the Construction/ Remedial Action Work Plan. Appendix G (Construction BMPs Plan) of the IM-3 Decommissioning Plan contains BMPs addressing waste and materials storage and handling areas.	This measure will be implemented as directed. PG&E has a bulk storage tank for fuel at the TCS that is included in the TCS HMBP. The TCS HMBP is on file with the local Fire Department.	The TCS HMBP (February 2014) is on file with the local Fire Department.

TABLE L1.1-1
Summary of Compliance with EIR Mitigation Measures
Groundwater Remedy Basis of Design Report/Final (100%) Design
PG&E Topock Compressor Station, Needles, California

Resources	Mitigation Number	Mitigation Measure	Which document(s) will contain or satisfy this measure?[1]	Action (Compliance Status)				Date Completed
				Preliminary (30%) Design	Intermediate (60%) Design	Pre-Final (90%)/Supplemental 90% Design	Final (100%) Design	
Hazardous Materials	HAZ-2	**Reasonably Foreseeable Releases of Chemicals from Excavated or Disturbed Soil** -- Before initiating ground-disturbing operations, a health and safety plan shall be developed and implemented by qualified environmental professionals to ensure health and safety precautions are being met. It is not possible to prepare the health and safety plan at this stage of the planning process because final construction plans and other design documents have not been finalized in sufficient detail. However, at a minimum, the health and safety plan shall include procedures to mitigate potential hazards, and such procedures shall include the use of PPE, measures that provide protection from physical hazards, measures that provide protection from chemical hazards that may be present at the site, decontamination procedures, and worker and health and safety monitoring criteria to be implemented during construction. The worker health and safety plan shall include protective measures and PPE that are specific to the conditions of concern and meet the requirements of the U.S. Occupational Safety and Health Administration's (OSHA's) construction safety requirements and Hazardous Waste Operations and Emergency Response Standard (29 CFR 1910.120). In accordance with OSHA requirements, appropriate training and recordkeeping shall also be a part of the health and safety program. The worker health and safety plan shall be certified by a Certified Industrial Hygienist in accordance with OSHA regulations. The worker health and safety plan shall be explained to the construction workers and all workers shall be required to sign the plan, which will be kept on the construction site at all times. Worker safety training shall occur prior to initiation of ground disturbing activities. Training shall include the review of all health and safety measures and procedures. All workers and engineering inspectors at the site shall provide written acknowledgement that the soils management plan (discussed below), worker health and safety plan, and community health and safety plan were reviewed and training was received prior to commencement of construction activities. The following are specific elements and directives that shall be included in the health and safety plan and implemented by PG&E during construction, operation and maintenance, and decommissioning of this project:	Health and Safety Plan	This mitigation measure will be implemented as directed. A health and safety plan will be developed for O&M activities and will be submitted with the O&M Plan. Similarly, a health and safety plan will be developed for construction activities and will be submitted with the Construction/Remedial Action Work Plan. The plans will be implemented by qualified environmental professionals.	This mitigation measure will be implemented as directed. A health and safety plan will be developed for O&M activities and will be submitted at the 90% design stage. Similarly, a health and safety plan will be developed for construction activities and will be submitted with the Construction/Remedial Action Work Plan at the 90% design stage. The plans will be implemented by qualified environmental professionals.	This mitigation measure will be implemented as directed. A health and safety plan for O&M activities was developed and is included in Volume 5 of the O&M Manual. Similarly, a health and safety plan for construction activities was developed and is included in an appendix of the Construction/ Remedial Action Work Plan.	This mitigation measure will be implemented as directed. A health and safety plan and guidelines for O&M activities were developed and are included in Volume 5 of the O&M Manual. The final O&M health and safety plan that meets the requirements of this mitigation measure will be submitted during the start-up phase of the remedy. A health and safety plan for construction activities that meets the requirements of this mitigation measure was developed and is included in Appendix D of the Construction/Remedial Action Work Plan.	The O&M Manual and C/RAWP were submitted on November 18, 2015. The Construction Health and Safety Plan was certified by a Certified Industrial Hygienist in accordance with OSHA regulations on November 8, 2015.

TABLE L1.1-1
Summary of Compliance with EIR Mitigation Measures
Groundwater Remedy Basis of Design Report/Final (100%) Design
PG&E Topock Compressor Station, Needles, California

Resources	Mitigation Number	Mitigation Measure	Which document(s) will contain or satisfy this measure?[1]	Action (Compliance Status)				Date Completed
				Preliminary (30%) Design	Intermediate (60%) Design	Pre-Final (90%)/Supplemental 90% Design	Final (100%) Design	
Hazardous Materials	HAZ-2a	a. Vehicles traveling on unpaved roadways or surfaces would be directed to avoid traveling in areas where contaminated soils are known to be present; vehicle speeds shall be controlled (e.g., limited to 15 mph or slower) to limit generation of dust; measures, such as wetting of surfaces, will be employed to prevent dust generation by vehicular traffic or other dust-generating work activities.	Construction/Remedial Action Work Plan; Plan for Decommissioning and Removal of IM-3 Facility and Site Restoration; Plan for Decommissioning of Remedy Facilities and Restoration	This measure will be implemented as directed. Vehicle movement will be controlled to avoid traveling in areas where contaminated soils are known to be present, and limit speeds to limit generation of dust.	This measure will be implemented as directed. Vehicle movement will be controlled to avoid traveling in areas where contaminated soils are known to be present, and speeds will be limited to limit generation of dust.	This measure will be implemented as directed. Vehicle movement will be controlled to avoid traveling in areas where contaminated soils are known to be present, and speeds will be limited to limit generation of dust.	This measure will be implemented as directed. Vehicle movement will be controlled to avoid traveling in areas where contaminated soils are known to be present, and speeds will be limited to limit generation of dust.	This mitigation measure was incorporated into the O&M Manual, the C/RAWP, and the IM-3 Decommissioning Plan. These documents were submitted on November 18, 2015.
Hazardous Materials	HAZ-2b	b. Pre-mobilization planning shall occur during which the likelihood of encountering contaminated soils shall be reviewed along with the HMBP, site-specific health and safety plan, and SOPs so that the procedures are followed and the contingencies for handling contaminated soils are in-place prior to implementing the field operations.	Construction/Remedial Action Work Plan; Plan for Decommissioning and Removal of IM-3 Facility and Site Restoration; Plan for Decommissioning of Remedy Facilities and Restoration	This measure will be implemented as directed. Pre-mobilization planning will be used to review the likelihood of encountering contaminated soils, the HMBP, site-specific health and safety plan, and SOPs so that the procedures are followed and the contingencies for handling contaminated soils are in-place.	This measure will be implemented as directed. Pre-mobilization planning will be used to review the likelihood of encountering contaminated soils, the HMBP, site-specific health and safety plan, and SOPs so that the procedures are followed and the contingencies for handling contaminated soils are in-place.	This measure will be implemented as directed, and included in the health and safety plans. Pre-mobilization planning will be used to review the likelihood of encountering contaminated soils, the HMBP, site-specific health and safety plan, and SOPs so that the procedures are followed and the contingencies for handling contaminated soils are in-place.	This measure will be implemented as directed, and has been included in the health and safety plans, which require pre-mobilization planning to review the likelihood of encountering contaminated soils. The HMBP, site-specific health and safety plan, and SOPs will be reviewed at a pre-mobilization meeting so that the procedures are followed and the contingencies for handling contaminated soils are in-place.	This mitigation measure was incorporated into the O&M Manual and the C/RAWP (including the IM-3 Decommissioning Plan). These documents were submitted on November 18, 2015.
Hazardous Materials	HAZ-2c	c. Should evidence of contaminated soil be identified during ground disturbing activities (e.g., noxious odors, discolored soil), work in this area will immediately cease until soil samples can be collected and analyzed for the presence of contaminants by the site supervisor or the site safety officer. Contaminated soil shall be managed and disposed of in accordance with a project-specific health and safety plan and soil management plan. The health and safety plan and soil management plan shall be approved by DTSC before beginning any ground disturbing activities. While the project is exempt from the requirements of the San Bernardino County Division of Environmental Health, the health and safety plan and soil management plan shall be prepared in general accordance with the substantive requirements of this agency.	Health and Safety Plan; Soil Management Plan (Volume 4 of O&M Manual)	This measure will be implemented as directed. A Health and Safety Plan and a Soil Management Plan will be prepared as part of the Construction/Remedial Action Work Plan and submitted to DTSC.	This measure will be implemented as directed. Project-specific Health and Safety Plans for construction and O&M activities will be prepared and submitted to DTSC at the 90% design stage. A Soil Management Plan (SMP) is included in Volume 4 of the O&M Manual, which is Appendix L to the 60% BOD report. The SMP includes procedures and protocols for the management and disposal of potentially contaminated soil displaced during drilling, construction, O&M of the groundwater remedy, and the decommissioning and removal of the IM-3 system.	This mitigation measure will be implemented as directed. A health and safety plan for O&M activities was developed and is included in Volume 5 of the O&M Manual, which is Appendix L to the 90% BOD. Similarly, a health and safety plan for construction activities was developed and is included in an appendix of the Construction/Remedial Action Work Plan. A Soil Management Plan (SMP) is included in Volume 4 of the O&M Manual. The SMP includes procedures and protocols for the management and disposal of displaced soil, including potentially contaminated soil, during drilling, construction, O&M of the groundwater remedy, and the decommissioning and removal of the IM-3 system.	This mitigation measure will be implemented as directed. Section 4.6.2.2 of the C/RAWP requires that if evidence of contaminated soil is identified during ground-disturbing activities, work will be halted until soil samples are analyzed. A Soil Management Plan (SMP) is included in Volume 4 of the O&M Manual. The SMP includes procedures and protocols for the management and disposal of displaced soil, including potentially contaminated soil, during drilling, construction, O&M of the groundwater remedy, and the decommissioning and removal of the IM-3 system.	This mitigation measure was incorporated into the C/RAWP and the O&M Manual. Both the O&M Manual and C/RAWP were submitted on November 18, 2015.

TABLE L1.1-1
Summary of Compliance with EIR Mitigation Measures
Groundwater Remedy Basis of Design Report/Final (100%) Design
PG&E Topock Compressor Station, Needles, California

Resources	Mitigation Number	Mitigation Measure	Which document(s) will contain or satisfy this measure?[1]	Action (Compliance Status)				Date Completed
				Preliminary (30%) Design	Intermediate (60%) Design	Pre-Final (90%)/Supplemental 90% Design	Final (100%) Design	
Hazardous Materials	HAZ-2d	d. In the event that drilling sites must be located within areas of suspected soil contamination, the appropriate PPE shall be worn by all personnel working in these areas and methods specified in the health and safety plan used to control the generation of dust. When working in these areas, personnel shall be required to follow all guidance presented in the site-specific health and safety plan and soil management plan. The site-specific health and safety plan shall include provisions for site control such as, but not limited to, delineation of the exclusion, contaminant reduction and support zones for each work area, decontamination procedures, and procedures for the handling of contaminated soils and other investigation derived wastes. Soil that is excavated shall be loaded directly into containers such as roll-off bins; dust suppression methods shall be used prior to and during loading of soils into the bins. Suspected contaminated soils shall be segregated from suspected uncontaminated soils.	Health and Safety Plan	This measure will be implemented as directed. A Health and Safety Plan will be prepared as part of the Construction/Remedial Action Work Plan and submitted to DTSC.	This measure will be implemented as directed. Project-specific Health and Safety Plans for construction and O&M activities will be prepared and submitted to DTSC at the 90% design stage.	This mitigation measure will be implemented as directed. A health and safety plan for O&M activities was developed and is included in Volume 5 of the O&M Manual. Similarly, a health and safety plan for construction activities was developed and is included in an appendix of the Construction/ Remedial Action Work Plan.	This mitigation measure will be implemented as directed. The requirements of this mitigation measure are included in a health and safety plan for O&M activities (Volume 5 of the O&M Manual) and a health and safety plan for construction activities (Appendix D of the Construction/Remedial Action Work Plan). For example, delineation of the exclusion, contaminant reduction and support zones for each work area, and decontamination, are discussed in Section 6 of the HSP. The management and handling of potentially contaminated soil is included in the Soil Management Plan (Volume 4 of the O&M Manual).	The O&M Manual and the C/RAWP were submitted on November 18, 2015.
Hazardous Materials	HAZ-2e	e. Personnel working at the site shall be trained in Hazardous Waste Operations.	Health and Safety Plan	This measure will be implemented as directed. A Health and Safety Plan will be prepared as part of the Construction/Remedial Action Work Plan, and will include requirement for training of personnel working at the site in Hazardous Waste Operations.	This measure will be implemented as directed. Project-specific Health and Safety Plans for construction and O&M activities will be prepared and submitted to DTSC at the 90% design stage, and will include requirement for training of personnel working at the site in Hazardous Waste Operations.	This mitigation measure will be implemented as directed. A health and safety plan for O&M activities was developed and is included in Volume 5 of the O&M Manual. Similarly, a health and safety plan for construction activities was developed and is included in an appendix of the Construction/ Remedial Action Work Plan.	This mitigation measure will be implemented as directed. The requirement that personnel who will manage hazardous waste or potentially hazardous waste be trained in hazardous waste operations is included in Section 4.1 of the Soil Management Plan (Volume 4 of the O&M Manual), a health and safety plan and guideline for O&M activities (Volume 5 of the O&M Manual), and a health and safety plan for construction activities (Section 5, Appendix D of the C/RAWP).	The O&M Manual and C/RAWP were submitted on November 18, 2015.
Hazardous Materials	HAZ-2f	f. All soil excavated and placed in roll-off bins or trucks for transportation off-site shall be covered with a tarp or rigid closure before transporting, and personnel working in the area shall be positioned upwind of the loading location.	Soil Management Plan (Volume 4 of O&M Manual)	This measure will be implemented as directed. A Soil Management Plan will be prepared as part of the Construction/Remedial Action Work Plan, and will include requirement for soil excavated and placed in roll-off bins or trucks for transportation off-site to be covered with a tarp or rigid closure before transporting.	This measure will be implemented as directed. A Soil Management Plan (SMP) is included in Volume 4 of the O&M Manual, which is Appendix L to the 60% BOD report. The SMP includes requirement for soil excavated and placed in roll-off bins or trucks for transportation off-site to be covered with a tarp or rigid closure before transporting.	This measure will be implemented as directed. An SMP is included in Volume 4 of the O&M Manual, which is Appendix L to the 90% BOD report. The SMP includes requirement for soil excavated and placed in roll-off bins or trucks for transportation off-site to be covered with a tarp or rigid closure before transporting (see Section 4.6 of the SMP).	This measure will be implemented as directed. The requirements of this mitigation measure are included in the Soil Management Plan, which is included in Volume 4 of the O&M Manual, which is Appendix L to this Final BOD report. The Soil Management Plan includes the requirement for soil excavated and placed in roll-off bins or trucks for transportation off-site to be covered with a tarp or rigid closure before transporting (see Section 4.6 of the SMP). In general, personnel working in the area will be positioned upwind of construction activities including bin loading – this safety detail is usually covered under a Job	The Soil Management Plan is included as Volume 4 of the O&M Manual, which was submitted on November 18, 2015. The Construction Health and Safety Plan was included as Appendix D of the C/RAWP which was submitted on November 18, 2015.

TABLE L1.1-1
Summary of Compliance with EIR Mitigation Measures
Groundwater Remedy Basis of Design Report/Final (100%) Design
PG&E Topock Compressor Station, Needles, California

Resources	Mitigation Number	Mitigation Measure	Which document(s) will contain or satisfy this measure?[1]	Action (Compliance Status)				Date Completed
				Preliminary (30%) Design	Intermediate (60%) Design	Pre-Final (90%)/Supplemental 90% Design	Final (100%) Design	
							Safety Analysis (JSA), which is also known as Activity Hazard Analysis (AHA)) or Job Hazard Analysis (JHA) (see Section 7.2 of the Construction Health and Safety Plan).	
Hydrology and Water Quality	HYDRO-1	**Exceedance of Water Quality Standards.** The project shall implement BMPs to meet the substantive criteria of NPDES General Permit for Stormwater Discharges Associated with Construction and Land Disturbance Activities Order No. 2009-0009-DWQ, NPDES No. CAS000002 (General Permit) (SWRCB 2009) as well as all other applicable federal, state, and local permit and regulatory requirements, even if a permit is not required pursuant to CERCLA, for purposes of ensuring the protection of receiving water quality. As such, a BMP plan shall be prepared and implemented for the project prior to construction and decommissioning phase activities. Impacts on water quality from pollutants, including soils from erosion, shall be controlled through use of the following types of BMPs, which shall be incorporated into the appropriate project-specific BMP plan. The General Permit requirements include specific BMPs as well as numeric effluent levels (NELs) and numeric action levels (NALs) to achieve the water quality standards (SWRCB 2009:3). Types of BMPs cited in the General Permit (SWRCB 2009:7) include: a) Scheduling of Activities; b) Prohibitions of Practices; c) Maintenance Procedures; d) Other Management Practices to Prevent or Reduce Discharge of Pollutants to Waters of the United States; e) Treatment Requirements; and f) Operating Procedures and Practice to Control Site Runoff, Spillage or Leaks, Sludge or Waste Disposal, or Drainage from Raw Materials Storage. Visual inspections and monitoring and sampling are required under the General Permit to evaluate the effectiveness of the BMPs and to determine whether modifying BMPs or implementing additional BMPs is required. The BMP designations cited below are based on those used by the California Stormwater Quality Association Construction BMP Handbook (California Stormwater Quality Association 2003) and are consistent with the types of BMPs referenced in the General Permit: g) Scheduling (SS-1): Proper scheduling assists in identifying ways to minimize disturbed areas, which allows for a reduction in the active project area requiring protection and also minimizes the length of time disturbed soils are exposed to erosive processes.	BMP Plan	This measure will be implemented as directed. PG&E will prepare a BMP Plan prior to construction activities which will be included in the Construction/Remedial Action Work Plan.	This measure will be implemented as directed. PG&E will prepare a BMP Plan prior to construction activities (at the 90% design stage) which will be included in the Construction/Remedial Action Work Plan. On December 27, 2011, the Superior Court issued a judgment in response to litigation, and the State Water Board will be amending Order 2009-0009-DWQ (as modified by Order No. 2010-00014-DWQ) in accordance with the related peremptory writ of mandate. As a result, the Numeric Effluent Limits (NELs) are no longer in effect. In addition, further amendments to the permit are possible.	This measure will be implemented as directed. A BMP Plan was prepared and included in an appendix of the Construction/Remedial Action Work Plan. On July 17, 2012, the State Water Resources Control Board amended Order 2009-009-DWQ by adopting Order No. 2012-0006-DWQ, NPDES NO. CAS000002. Order 2012-006-DWQ requires effluent monitoring and reporting for pH and turbidity in storm water discharges. The monitoring will be used to evaluate whether numeric action levels (NALs) and numeric effluent limitations (NELs) for Active Treatment Systems included in the Construction General Permit are exceeded. The Permit contains only narrative effluent limitations and does not contain numeric effluent limitations, except for Active Treatment Systems (ATSs).	This measure will be implemented as directed. A BMP Plan was prepared by Gino Nguyen, a Qualified SWPPP Developer, to meet the substantive criteria of the applicable General Permit (including the July 2012 requirements) and all other applicable federal, state, and local permit and regulatory requirements. The BMP Plan is Appendix M to the Construction/Remedial Action Work Plan. Section 2 of the BMP Plan requires visual inspections and monitoring and sampling to evaluate the effectiveness of the BMPs and determine whether modification is required.	This measure is incorporated into the C/RAWP (see Appendix M) and in the IM-3 Decommissioning Work Plan (see Appendix G).These documents were submitted on November 18, 2015.

TABLE L1.1-1
Summary of Compliance with EIR Mitigation Measures
Groundwater Remedy Basis of Design Report/Final (100%) Design
PG&E Topock Compressor Station, Needles, California

Resources	Mitigation Number	Mitigation Measure	Which document(s) will contain or satisfy this measure?[1]	Action (Compliance Status)				Date Completed
				Preliminary (30%) Design	Intermediate (60%) Design	Pre-Final (90%)/Supplemental 90% Design	Final (100%) Design	
		h) Preservation of Existing Vegetation (SS-2): Preserving existing vegetation to the maximum extent practicable facilitates protection of surfaces from erosion and can also help to control sediments. Sensitive areas should also be clearly identified and protected. i) Hydraulic Mulch (S S-3), Straw Mulch (S S-6), and Wood Mulching (SS-8): Using various mulches is a method for temporarily stabilizing soil and can be used on surfaces with little or no slope. j) Geotextiles, Plastic Covers, and Erosion Control Blankets/Mats (SS-7): These erosion control methods can be used on flat or, usually, sloped surfaces, channels, and stockpiles. k) Stabilized Construction Entrance/Exit (TC-1): A graveled area or pad located at points where vehicles enter and leave a construction site can be built. This BMP provides a buffer area where vehicles can drop their mud and sediment to avoid transporting it onto public roads, to control erosion from surface runoff, and to help control dust. l) Runoff Control Measures (SS-9, SS-10, and SC-10): These include graded surfaces to redirect sheet flow, diversion dikes or berms that force sheet flow around a protected area, and stormwater conveyances (swales, channels, gutters, drains, sewers) that intercept, collect, and redirect runoff. Diversions can be either temporary or permanent. Temporary diversions include excavation of a channel along with placement of the spoil in a dike on the downgradient side of the channel, and placement of gravel in a ridge below an excavated swale. Permanent diversions are used to divide a site into specific drainage areas, should be sized to capture and carry a specific magnitude of storm event, and should be constructed of more permanent materials. A water bar is a specific kind of runoff diversion that is constructed diagonally at intervals across a linear sloping surface such as a road or right-of-way that is subject to erosion. Water bars are meant to interrupt accumulation of erosive volumes of water through their periodic placement down the slope, and divert the resulting segments of flow into adjacent undisturbed areas for dissipation. m) Silt Fence (SC-1): A temporary sediment barrier consisting of fabric is designed to retain sediment from small disturbed areas by reducing the velocity of sheet flows. n) Gravel Bag Berm (SC-6) and Sand/Gravel Bag Barrier (SC-8): A temporary sediment barrier consisting of gravel-filled fabric bags is designed to						

		retain sediment from small disturbed areas by reducing the velocity of sheet flows. o) Desilting Basin (SC-2) and Sediment Trap (SC-3): Constructing temporary detention structures facilitates the removal of sediment from waters. The devices provide time for sediment particles to settle out of the water before runoff is discharged. Secondary concerns include potential pollutants from inappropriate material storage and handling procedures and nonstormwater discharges. These will be addressed through the following types of BMPs, which shall be incorporated into the stormwater BMP plan: p) Material Delivery and Storage (WM-1): Provide covered storage for materials, especially toxic or hazardous materials, to prevent exposure to stormwater. Store and transfer toxic or hazardous materials on impervious surfaces that will provide secondary containment for spills. Park vehicles and equipment used for material delivery and storage, as well as contractor vehicles, in designated areas. q) Spill Prevention and Control (WM-4): Ensure that spills and releases of materials are cleaned up immediately and thoroughly. Ensure that appropriate spill response equipment, preferably spill kits preloaded with absorbents in an overpack drum, is provided at convenient locations throughout the site. Spent absorbent material must be managed and disposed of in accordance with applicable regulations. In particular, absorbents used to clean up spills of hazardous materials or waste must be managed as hazardous waste unless characterized as nonhazardous. r) Solid Waste Management (WM-5): Provide a sufficient number of conveniently located trash and scrap receptacles to promote proper disposal of solid wastes. Ensure that the receptacles are provided with lids or covers to prevent windblown litter. s) Hazardous Waste Management (WM-6): Provide a sufficient number of proper receptacles to promote proper disposal of hazardous wastes. t) Concrete Waste Management (WM-8): Dispose of excess concrete in specific concrete washout facilities. u) Sanitary/Septic Waste Management (WM-9): Locate sanitary and septic waste facilities away from drainage courses and traffic areas. Maintain the facilities regularly. v) Vehicle and Equipment Cleaning (NS-8): Clean vehicles and equipment that regularly enter and leave the construction site. w) Vehicle and Equipment Fueling (NS-9): Fuel vehicles and equipment off- site whenever possible. If off-site fueling is not practical, establish a designated on-site fueling area with proper containment and spill cleanup materials. x) Vehicle and Equipment Maintenance (NS-10): Use off-site maintenance facilities whenever possible.						

TABLE L1.1-1
Summary of Compliance with EIR Mitigation Measures
Groundwater Remedy Basis of Design Report/Final (100%) Design
PG&E Topock Compressor Station, Needles, California

Resources	Mitigation Number	Mitigation Measure	Which document(s) will contain or satisfy this measure?[1]	Action (Compliance Status)				Date Completed
				Preliminary (30%) Design	Intermediate (60%) Design	Pre-Final (90%)/Supplemental 90% Design	Final (100%) Design	
		Any on-site maintenance areas must be protected from stormwater runoff and on-site flooding.						
Hydrology and Water Quality	HYDRO-1	In addition to BMPs implemented to avoid or reduce impacts from the construction and decommissioning phases, BMPs shall also be implemented to avoid or reduce impacts from the operations and maintenance phases. To address potential violation of water quality standards caused by insufficient treatment, system failure at concentrations in excess of water quality standards, proper design shall include contingency measures such as safeguards to shut down the extraction wells in case of pipeline failure or malfunction. In addition, operation of the proposed project will be governed by and follow an O&M plan. PG&E will comply with all applicable water quality standards, the General Permit, and any SWRCB or RWQCB resolutions identified as ARAR, as well as a corrective action monitoring program. Under the corrective action monitoring program, data will be collected to measure performance of the remedy, compliance with standards, and progress of the remedial action as a part of the project description. In addition, the project will be operated to continually assess performance issues and to modify the type, method, and configuration of the treatment delivery systems to enhance performance of the remedy to attain the cleanup goals and to respond to site conditions and performance issues as described in the project description.	O&M Plan	This measure will be implemented as directed. An O&M Plan will be developed and will include BMPs to avoid or reduce impacts from the operations and maintenance phases, and a monitoring program in compliance with applicable water quality standards, the General Permit, and identified ARARs.	This measure will be implemented as directed. The Contingency Plan (Volume 3) of the O&M Manual, which is included in the 60% design, includes BMPs to avoid or reduce impacts from the operations and maintenance phases. The Sampling and Monitoring Plan (Volume 2) of the O&M Manual includes a monitoring program in compliance with applicable water quality standards, and identified ARARs. The O&M SWPPP (Appendix E of the O&M Plan) will include a storm water monitoring program in compliance with the General Permit. The outline for the O&M SWPPP is included in the Draft O&M Manual at the 60% design stage; the complete SWPPP will be provided at the 90% design stage.	This measure will be implemented as directed. The Contingency Plan (Volume 3) of the O&M Manual, which is included in the 90% design, includes BMPs to avoid or reduce impacts from the operations and maintenance phases. The Sampling and Monitoring Plan (Volume 2) of the O&M Manual includes a monitoring program in compliance with applicable water quality standards, and identified ARARs. The O&M (or industrial) SWPPP (Appendix E of the O&M Plan) includes a storm water monitoring program in compliance with the new Statewide Industrial Storm Water General Permit, which will become effective on July 1, 2015.	This measure will be implemented as directed. The Contingency Plan (Volume 3) of the O&M Manual, which is included in the final design, includes BMPs to avoid or reduce hydrology and water quality impacts from the operations and maintenance phases, including, but not limited to, protocols for shutting down the extraction wells in case of pipeline failure or malfunction. An O&M Manual has been prepared to govern the operation of the remedy. The Sampling and Monitoring Plan (Volume 2) of the O&M Manual includes a monitoring program in compliance with applicable water quality standards, the General Permit, and identified ARARs. The O&M (or industrial) SWPPP (Appendix D of the O&M Plan) includes a storm water monitoring program in compliance with the new Statewide Industrial Storm Water General Permit, which became effective on July 1, 2015.	This measure is incorporated into the Contingency Plan (Volume 3) of the O&M Manual and the Sampling and Monitoring Plan (Volume 2) of the O&M Manual, which was submitted on November 18, 2015.
Hydrology and Water Quality	HYDRO-1	A SWPPP will also be prepared for the proposed project, which will contain BMPs related to industrial activities (industrial SWPPP). The BMPs are designed to reduce pollutants in discharges that may affect receiving water quality during operations and maintenance of the proposed project. As noted above, BMP designations are based on those used by the *California Stormwater Quality Association Construction BMP Handbook* (California Stormwater Quality Association 2003) and those referenced in the General Permit The SWPPP will incorporate BMPs such as the following: y) Good Housekeeping: Maintain facility in a clean manner and train facility personnel to contribute to a safe, clean, and orderly environment by properly disposing of trash in designated containers, storing materials in appropriate locations, and keeping equipment clean and in good working condition. z) Preventative Maintenance: Prevent or minimize release of pollutants. Develop Standard Operating Procedures for operation and maintenance of facility components and train employees to follow the procedures.	Stormwater Pollution Prevention Plan (SWPPP)/ BMP Plan and Monitoring and Reporting	This measure will be implemented as directed. An industrial Storm Water Pollution Prevention Plan (SWPPP) will be developed as part of the O&M Plan and implemented to reduce pollutants in discharges that may affect receiving water quality during operations and maintenance of the remedy	This measure will be implemented as directed. The O&M SWPPP outline is included as Appendix E of the O&M Plan. The complete SWPPP will be submitted at the 90% design stage. The SWPPP will be developed in compliance with the Industrial Storm Water General Permit Order 97-03-DWQ (General Industrial Permit), or the relevant applicable requirements.	This measure will be implemented as directed. The industrial SWPPP was developed and included in Appendix E of the O&M Plan. The O&M (or industrial) SWPPP (Appendix E of the O&M Plan) includes a storm water monitoring program in compliance with the new Statewide Industrial Storm Water General Permit which will become effective on July 1, 2015.	This measure will be implemented as directed. The industrial SWPPP that complies with the requirements of this mitigation measure and the General Permit was developed and included in Appendix D of the O&M Plan. For example, the O&M (or industrial) SWPPP (Appendix D of the O&M Plan) includes a storm water monitoring program in compliance with the new Statewide Industrial Storm Water General Permit which became effective on July 1, 2015.	This measure is incorporated in Appendix D (Storm Water Pollution Prevention Plan for O&M Activities) of the O&M Manual, Volume 1, which was submitted on November 18, 2015.

TABLE L1.1-1
Summary of Compliance with EIR Mitigation Measures
Groundwater Remedy Basis of Design Report/Final (100%) Design
PG&E Topock Compressor Station, Needles, California

Resources	Mitigation Number	Mitigation Measure	Which document(s) will contain or satisfy this measure?[1]	Action (Compliance Status)				Date Completed
				Preliminary (30%) Design	Intermediate (60%) Design	Pre-Final (90%)/Supplemental 90% Design	Final (100%) Design	
		aa) Non-Stormwater Discharges (SC-10): Ensure that used oil, used antifreeze, and hazardous chemical recycling programs are being implemented. Conduct regular inspections of high priority areas. bb) Spill Prevention, Control, and Cleanup (SC-1 1): Store materials properly to prevent spills from entering the storm drain system or surface waters. Ensure that spill cleanup materials are located on-site and are easily accessible. Clean up leaks and spills immediately using proper absorbent materials. Absorbents used to clean up hazardous materials must be disposed of as hazardous waste. Educate employees about spill prevention and cleanup. cc) Vehicle and Equipment Fueling (SC-20): Maintain clean fuel-dispensing areas using dry cleanup methods, such as sweeping or using rags and absorbents for leaks and spills. Cover the fueling area to prevent contact with stormwater. Train personnel in pollution prevention, focusing on containment of spills and leaks. dd) Outdoor Loading/Unloading (SC-30): Load and unload chemicals during dry weather, if possible, and load and unload in designated areas. Check equipment regularly for leaks. ee) Outdoor Liquid Container Storage (SC-3 1): Cover the storage area with a roof and provide secondary containment. Inspect storage areas regularly for leaks or spills. ff) Outdoor Equipment Operations (SC-32): Perform activities during dry weather, cover the work area with a roof, and use secondary containment. Train employees in proper techniques for spill containment and cleanup. gg) Waste Handling and Disposal (SC-34): Cover storage containers with leak-proof lids, check for leaks weekly, and clean storage areas regularly. Ensure that wastes are disposed of properly. hh) Tank Design System: Ensure that tank systems have sufficient strength to avoid collapse, rupture, or failure and that they are protected against physical damage and excessive stress. Provide adequate secondary containment.						
Hydrology and Water Quality	HYDRO-1	In conformance with the substantive requirements of General Permit (Order No. 2009-0009-DWQ, a monitoring and reporting program will be implemented to assess the effectiveness of BMPs and to modify BMPs and revise the SWPPP, if necessary, to continue to reduce pollutants and impacts on receiving waters. The monitoring program shall include the following minimum elements as per the General Permit: ii) quarterly, nonstormwater visual inspections,	Stormwater Pollution Prevention Plan (SWPPP)/ BMP Plan and Monitoring and Reporting	This measure will be implemented as directed. The SWPPP will include a monitoring and reporting program to assess the effectiveness of BMPs and to modify BMPs and revise the SWPPP, if necessary.	This measure will be implemented as directed. The O&M SWPPP and BMP Plan, which will be submitted at the 90% design stage, will include a monitoring and reporting program to assess the effectiveness of BMPs and to modify BMPs and revise the SWPPP, if necessary. On December 27, 2011, the Superior Court issued a judgment in response	This measure will be implemented as directed. The industrial SWPPP and BMP Plan include a monitoring and reporting program to assess the effectiveness of BMPs and to modify BMPs and revise the SWPPP, if necessary. On July 17, 2012, The State Water Resources Control Board amended Order 2009-009-DWQ by adopting	This measure will be implemented as directed. The industrial SWPPP and BMP Plan include a monitoring and reporting program to assess the effectiveness of BMPs and to modify BMPs and revise the SWPPP, if necessary.	This measure is incorporated in Appendix D (Storm Water Pollution Prevention Plan for O&M Activities) of the O&M manual, Volume 1; Appendix M of the C/RAWP; as well as Appendix G of the IM-3 Decommissioning Plan. These documents were submitted on November 18, 2015.

TABLE L1.1-1
Summary of Compliance with EIR Mitigation Measures
Groundwater Remedy Basis of Design Report/Final (100%) Design
PG&E Topock Compressor Station, Needles, California

Resources	Mitigation Number	Mitigation Measure	Which document(s) will contain or satisfy this measure?[1]	Action (Compliance Status)				Date Completed
				Preliminary (30%) Design	Intermediate (60%) Design	Pre-Final (90%)/Supplemental 90% Design	Final (100%) Design	
		jj) storm-related visual inspections within 2 business days of a qualifying rain event (producing precipitation of one-half inch or more of discharge), kk) visual inspection after a storm event, ll) monitoring of nonvisual pollutants based on the calculated risk level for the project, with Risk Level 2 and 3 requiring a minimum of three samples per day during qualifying rain events (SWRCB 2009: Tables 5 and 6, 22–27), and mm) monitoring and reporting for linear projects as per Table 2.7-1A of the General Permit Results of this monitoring shall be reported annually to DTSC and to the Storm Water Multi-Application Reporting and Tracking System (SMARTS). The annual report shall include a summary and evaluation of all sampling and analysis results, original laboratory reports, and chain of custody forms; a summary of all corrective actions taken during the compliance year; and identification of any compliance activities or corrective actions that were not implemented. NEL Violation Reports and/or NAL Violation Reports are required for Risk Level 3 and linear underground/overhead project (LUP) Type 3 Discharges. Should the project meet these criteria, the respective reports shall be submitted within 5 days of the end of the storm event, as per General Permit requirements, and provide the required information identified (SWRCB 2009:26–27 and Table 2.7-1A). The implementation of stormwater plans shall include an education component to train workers on water quality concerns and proper BMP implementation, maintenance, and repair, in addition to stormwater management program training on the construction BMP plan and industrial SWPPP.			to litigation, and the State Water Board will be amending Order 2009-0009-DWQ (as modified by Order No. 2010-00014-DWQ) in accordance with the related peremptory writ of mandate. As a result, the Numeric Effluent Limits (NELs) are no longer in effect. In addition, further amendments to the permit are possible.	Order No. 2012-0006-DWQ NPDES NO. CAS000002. Order 2012-006-DWQ requires effluent monitoring and reporting for pH and turbidity in storm water discharges. The monitoring will be used to evaluate whether numeric action levels (NALs) and numeric effluent limitations (NELs) for Active Treatment Systems included in the Construction General Permit are exceeded. The Permit contains only narrative effluent limitations and does not contain numeric effluent limitations, except for Active Treatment Systems (ATSs).		
Hydrology and Water Quality	HYDRO-2	**Exceedance of Water Quality Standards and/or Waste Discharge Requirements** - Implement Mitigation Measure HYDRO-1. Implementation of appropriate BMPs defined in Mitigation Measure HYDRO-1 would minimize impacts on water quality by controlling erosion and siltation. Consequently, any impacts associated with erosion and siltation resulting from alterations of drainage and hydrology and water quality during construction, operation and maintenance, and decommissioning.	Stormwater Pollution Prevention Plan (SWPPP)/ BMP Plan and Monitoring and Reporting	This measure will be met through actions to be taken under HYDRO-1.	This measure will be met through actions to be taken under HYDRO-1.	This measure will be met through actions to be taken under HYDRO-1.	This measure will be met through actions to be taken under HYDRO-1.	See HYDRO-1.
Hydrology and Water Quality	HYDRO-3	**Exceedance of Water Quality Standards and/or Waste Discharge Requirements.** Implement Mitigation Measure HYDRO-1. Mitigation Measure HYDRO- 1 shall be implemented. Implementation of appropriate BMPs defined in Mitigation Measure HYDRO-1 would minimize impacts on water quality by controlling potential pollutants, including sediment, and runoff discharges from the project area. Consequently, any impacts associated with	Stormwater Pollution Prevention Plan (SWPPP)/ BMP Plan and Monitoring and Reporting	This measure will be met through actions to be taken under HYDRO-1.	This measure will be met through actions to be taken under HYDRO-1.	This measure will be met through actions to be taken under HYDRO-1.	This measure will be met through actions to be taken under HYDRO-1.	See HYDRO-1.

TABLE L1.1-1
Summary of Compliance with EIR Mitigation Measures
Groundwater Remedy Basis of Design Report/Final (100%) Design
PG&E Topock Compressor Station, Needles, California

Resources	Mitigation Number	Mitigation Measure	Which document(s) will contain or satisfy this measure?[1]	Action (Compliance Status)				Date Completed
				Preliminary (30%) Design	Intermediate (60%) Design	Pre-Final (90%)/Supplemental 90% Design	Final (100%) Design	
		pollutants resulting from alterations of drainage and water quality during construction, operation and maintenance, and decommissioning.						
Noise	**Noise-1**	**Short-Term Groundborne Noise and Vibration Levels Caused by Construction Activities near Sensitive Receptors.**						
Noise	Noise-1a	a) Construct new wells a minimum of 45 feet from vibration-sensitive receptors. Avoid constructing wells within 30 feet of vibration- sensitive land uses located in California and 275 feet of vibration-sensitive land uses located in Arizona;	Construction/Remedial Action Work Plan; Plan for Decommissioning and Removal of IM-3 Facility and Site Restoration; Plan for Decommissioning of Remedy Facilities and Restoration	The EIR defined the Topock Marina Mobile Home Park or single family residences (page 4.9-20) as vibration-sensitive receptors. Since the EIR does not define vibration-sensitive land uses, PG&E assumes that they are residential and mobile home parks. Based on this definition, none of the remediation wells presented in the preliminary (30%) design are located within 45 feet of vibration-sensitive receptors or within 30 feet and 275 feet of vibration-sensitive land uses in California and Arizona, respectively. Locations of new monitoring wells will be presented in the intermediate (60%) design, these wells will be placed to meet the requirements of this mitigation measure.	The EIR defined the Topock Marina Mobile Home Park or single family residences (page 4.9-20) as vibration-sensitive receptors. Based on the EIR discussion, PG&E assumes that vibration-sensitive land uses are residential and mobile home parks. Based on this definition, none of the proposed remediation or new monitoring wells presented in the 60% design is located within 45 feet of vibration-sensitive receptors or within 30 feet and 275 feet of vibration-sensitive land uses in California and Arizona, respectively.	PG&E understands that NOISE-1 analyzes whether construction may result in the exposure of sensitive receptors to groundborne noise and vibration levels that exceed the applicable standards of the San Bernardino County Development Code (83.01.090) and the Mohave County Zoning Ordinance**.** Potential significant impacts the measure is designed to mitigate are “annoyance and/or architectural/structural damage.” For the purpose of NOISE-1, the EIR defined the Topock Marina Mobile Home Park or single family residences (page 4.9-20) as vibration-sensitive receptors. Based on this definition, none of the proposed remediation or new monitoring wells presented in the 90% design is located within 45 feet of vibration-sensitive receptors or within 30 feet and 275 feet of vibration-sensitive land uses in California and Arizona, respectively.	PG&E understands that NOISE-1 analyzes whether construction may result in the exposure of sensitive receptors to groundborne noise and vibration levels that exceed the applicable standards of the San Bernardino County Development Code (83.01.090) and the Mohave County Zoning Ordinance**.** Potential significant impacts the measure is designed to mitigate are “annoyance and/or architectural/structural damage.” For the purpose of NOISE-1, the EIR defined the Topock Marina Mobile Home Park or single family residences (page 4.9-20) as vibration-sensitive receptors. Based on this definition, none of the proposed remediation or new monitoring wells presented in the final design is located within 45 feet of vibration-sensitive receptors or within 30 feet and 275 feet of vibration-sensitive land uses in California and Arizona, respectively.	This measure was incorporated into the final design, submitted on November 18, 2015.

TABLE L1.1-1
Summary of Compliance with EIR Mitigation Measures
Groundwater Remedy Basis of Design Report/Final (100%) Design
PG&E Topock Compressor Station, Needles, California

Resources	Mitigation Number	Mitigation Measure	Which document(s) will contain or satisfy this measure?[1]	Action (Compliance Status)				Date Completed
				Preliminary (30%) Design	Intermediate (60%) Design	Pre-Final (90%)/Supplemental 90% Design	Final (100%) Design	
Noise	Noise-1b	b) A disturbance coordinator will be designated by the project applicant, which will post contact information in a conspicuous location near the entrance so that it is clearly visible to nearby receivers most likely to be disturbed. The coordinator will manage complaints resulting from the construction vibration. Reoccurring disturbances will be evaluated by a qualified acoustical consultant retained by the project applicant to ensure compliance with applicable standards. The disturbance coordinator will contact nearby vibration-sensitive receptors, advising them of the construction schedule.	Construction/Remedial Action Work Plan; Plan for Decommissioning and Removal of IM-3 Facility and Site Restoration; Plan for Decommissioning of Remedy Facilities and Restoration	Noise disturbance coordinators have been designated to manage communication with nearby vibration-sensitive receptors, and noise/vibration issues and complaints.	Noise disturbance coordinators have been designated to manage communication with nearby vibration-sensitive receptors, and noise/vibration issues and complaints.	PG&E disturbance coordinators (Curt Russell and Chris Smith) have been designated to manage both noise and vibration concerns that may arise during construction. The disturbance coordinators will post their contact information in a conspicuous location near the construction trailer entrance so that it is clearly visible to nearby receivers. The disturbance coordinator will send the construction schedule to nearby vibration-sensitive receptors prior to commencement of that construction work. Should a concern about the actual noise generated by remedy construction arise, PG&E disturbance coordinator will thoroughly investigate and resolve the issue appropriately. A qualified acoustical consultant will evaluate all reoccurring disturbances for compliance with applicable standards. All noise complaints and their resolutions will be recorded, tracked, and reported to DTSC in the quarterly compliance reports.	PG&E disturbance coordinators (Curt Russell and Chris Smith) have been designated to manage both noise and vibration concerns that may arise during construction. The disturbance coordinators will post their contact information in a conspicuous location near the construction trailer entrance so that it is clearly visible to nearby receivers. The disturbance coordinator will send the construction schedule to nearby vibration-sensitive receptors prior to commencement of that construction work. Should a concern about the actual noise generated by remedy construction arise, the PG&E disturbance coordinator(s) will thoroughly investigate and resolve the issue appropriately. A qualified acoustical consultant will evaluate all reoccurring disturbances for compliance with applicable standards. All noise complaints and their resolutions will be recorded, tracked, and reported to DTSC in the quarterly compliance reports.	Disturbance coordinators were designated on November 18, 2011
Noise	**Noise-2**	**Project-Generated Construction-Related Noise Levels.**						
Noise	Noise-2a	a) Construction equipment shall be properly maintained per manufacturer specifications and fitted with the best available noise suppression devices (e.g., mufflers, silencers, wraps). All impact tools shall be shrouded or shielded, and all intake and exhaust ports on power equipment shall be muffled or shielded.	Construction/Remedial Action Work Plan; Plan for Decommissioning and Removal of IM-3 Facility and Site Restoration; Plan for Decommissioning of Remedy Facilities and Restoration	This measure will be implemented as directed. Construction equipment will be maintained and fitted with available noise suppression devices, impact tools will be shrouded or shielded, and all intake and exhaust ports on power equipment will be muffled or shielded.	This measure will be implemented as directed. Construction equipment will be maintained and fitted with available noise suppression devices, impact tools will be shrouded or shielded, and all intake and exhaust ports on power equipment will be muffled or shielded.	This measure will be implemented as directed. Construction equipment will be maintained and fitted with best available noise suppression devices, applicable impact tools will be shrouded or shielded, and all intake and exhaust ports on power equipment will be muffled or shielded.	This measure will be implemented as directed. Construction equipment will be maintained and fitted with best available noise suppression devices, applicable impact tools will be shrouded or shielded, and all intake and exhaust ports on power equipment will be muffled or shielded.	This measure was incorporated into the C/RAWP and the IM-3 Decommissioning Work Plan (Appendix F) which were submitted on November 18, 2015.
Noise	Noise-2b	b) Construction equipment shall not idle for extended periods of time (more than 15 minutes) when not being utilized during construction activities.	Construction/Remedial Action Work Plan; Plan for Decommissioning and Removal of IM-3 Facility and Site Restoration; Plan for Decommissioning of Remedy Facilities and Restoration	This measure will be implemented as directed. Construction equipment will not be left idle for extended periods of time (more than 15 minutes) when not being used.	This measure will be implemented as directed. Construction equipment will not be left idle for extended periods of time (more than 15 minutes) when not being used.	This measure will be implemented as directed. Construction equipment will not be left idle for extended periods of time (more than 15 minutes) when not being used.	This measure will be implemented as directed. The BMP Plan (Section 4.6.3 of the C/RAWP) and Appendix G to the IM-3 Decommissioning Work Plan BMPs (Appendix G to Appendix F of the C/RAWP) require construction equipment to not be left idle for extended periods of time (more than 15 minutes) when not being used.	The C/RAWP and the IM-3 Decommissioning Work Plan (Appendix F) were submitted on November 18, 2015.

TABLE L1.1-1
Summary of Compliance with EIR Mitigation Measures
Groundwater Remedy Basis of Design Report/Final (100%) Design
PG&E Topock Compressor Station, Needles, California

Resources	Mitigation Number	Mitigation Measure	Which document(s) will contain or satisfy this measure?[1]	Action (Compliance Status)				Date Completed
				Preliminary (30%) Design	Intermediate (60%) Design	Pre-Final (90%)/Supplemental 90% Design	Final (100%) Design	
Noise	Noise-2c	c) Construction activities shall include the use of berms, stockpiles, dumpsters, and or bins to shield the nearest noise-sensitive receptor adjacent to construction activities to within acceptable non-transportation noise level standards. When construction activities are conducted within the distances outlined above (i.e., 1,850 feet and 5,830 feet from California receptors and 330 feet and 735 feet from Arizona receptors for daytime and nighttime noise, respectively) relative to noise-sensitive uses in the project area, noise measurements shall be conducted by a qualified acoustical consultant at the nearest noise-sensitive land use relative to the construction activities with a sound level meter that meets the standards of the American National Standards Institute (ANSI Section S14 1979, Type 1 of Type 2) to ensure that construction noise associated with the project component complies with applicable daytime and nighttime noise standards. If noise levels are still determined to exceed noise standards, temporary barriers shall be erected as close to the construction activities as feasible, breaking the line of sight between the source and receptor where noise levels exceed applicable standards. All acoustical barriers shall be constructed with material having a minimum surface weight of 2 pounds per square foot or greater and a demonstrated Sound Transmission Class (STC) rating of 25 or greater as defined by the American Society for Testing and Materials' Test Method E90. Placement, orientation, size, and density of acoustical barriers shall be specified by a qualified acoustical consultant.	Construction/Remedial Action Work Plan; Plan for Decommissioning and Removal of IM-3 Facility and Site Restoration; Plan for Decommissioning of Remedy Facilities and Restoration	This measure will be implemented as directed. The use of berms, stockpiles, dumpsters, and or bins to shield the nearest noise-sensitive receptor adjacent to construction activities will be implemented. When construction activities are within the distance outline, the additional requirements specified in this measure will be implemented.	This measure will be implemented as directed. PG&E interprets the acceptable non-transportation noise level standards cited in the mitigation measure to be San Bernardino County Development Code 83.01.080; specifically Table 83-2 specifies noise standards for stationary noise sources for residential land use to be 55 A-weighted decibels (dBA) from 7 am-10 pm and 45 dBA from 10 pm-7 am, other Commercial land use to be 60 dBA all day, and Industrial land use to be 70 dBA all day. In addition, Section (g) of the County Code 83.01.080 lists the noise sources that are exempted from the regulations which include a) motor vehicles not under the control of the commercial or industrial use, b) emergency equipment/vehicles/devices, and c) temporary construction, maintenance, repair, or demolition activities between 7 am and 7 pm, except Sundays and Federal holidays. The use of berms, stockpiles, dumpsters, and/or bins to shield the nearest noise-sensitive receptor adjacent to construction activities will be implemented as needed. When construction activities are within the distance outline, the additional requirements specified in this measure will be implemented.	This measure will be implemented as directed. PG&E interprets the acceptable non-transportation noise level standards cited in the mitigation measure to be San Bernardino County Development Code 83.01.080; specifically Table 83-2 specifies noise standards for stationary noise sources for residential land use to be 55 A-weighted decibels (dBA) from 7 am-10 pm and 45 dBA from 10 pm-7 am, other Commercial land use to be 60 dBA all day, and Industrial land use to be 70 dBA all day. In addition, Section (g) of the County Code 83.01.080 lists the noise sources that are exempted from the regulations which include a) motor vehicles not under the control of the commercial or industrial use, b) emergency equipment/vehicles/devices, and c) temporary construction, maintenance, repair, or demolition activities between 7 am and 7 pm, except Sundays and federal holidays. Figures in Section 4 of the Construction/Remedial Action Work Plan identify the noise sensitive receptors and potential construction activities that could trigger noise monitoring in accordance with the EIR mitigation measure Noise-2c. Although night-time construction is not planned, activities that could occur within specified distance from the sensitive receptors are identified on both figures for completeness. Noise monitoring locations will be the boundary of the noise receptors facing the project-related construction activities. The precise monitoring locations will be determined in the field by a qualified acoustical consultant. The use of berms, stockpiles, dumpsters, and/or bins to shield the nearest noise-sensitive receptor adjacent to construction activities will be implemented as needed, and is included in the Construction/Remedial Action Work Plan.	This measure will be implemented as directed. Based on the text in the 2011 EIR, PG&E interprets the acceptable non-transportation noise level standards cited in the mitigation measure to be San Bernardino County Development Code 83.01.080; specifically Table 83-2 specifies noise standards for stationary noise sources for residential land use to be 55 A-weighted decibels (dBA) from 7 am-10 pm and 45 dBA from 10 pm-7 am, other Commercial land use to be 60 dBA all day, and Industrial land use to be 70 dBA all day. In addition, Section (g) of the County Code 83.01.080 lists the noise sources that are exempted from the regulations which include a) motor vehicles not under the control of the commercial or industrial use, b) emergency equipment/vehicles/devices, and c) temporary construction, maintenance, repair, or demolition activities between 7 am and 7 pm, except Sundays and federal holidays. Figures in Section 4 of the Construction/Remedial Action Work Plan identify the noise sensitive receptors and potential construction activities that could trigger noise monitoring in accordance with the EIR mitigation measure Noise-2c. Although night-time construction is not planned, activities that could occur within specified distance from the sensitive receptors are identified on both figures for completeness. Noise monitoring locations will be the boundary of the noise receptors facing the project-related construction activities. The precise monitoring locations will be determined in the field by a qualified acoustical consultant. The use of berms, stockpiles, dumpsters, and/or bins to shield the nearest noise-sensitive receptor adjacent to construction activities will be implemented as needed, and is included in the Construction/Remedial Action Work Plan.	This measure was incorporated into the C/RAWP and the IM-3 Decommissioning Work Plan (Appendix F) which were submitted on November 18, 2015.

TABLE L1.1-1
Summary of Compliance with EIR Mitigation Measures
Groundwater Remedy Basis of Design Report/Final (100%) Design
PG&E Topock Compressor Station, Needles, California

Resources	Mitigation Number	Mitigation Measure	Which document(s) will contain or satisfy this measure?[1]	Action (Compliance Status)				Date Completed
				Preliminary (30%) Design	Intermediate (60%) Design	Pre-Final (90%)/Supplemental 90% Design	Final (100%) Design	
						When construction activities are within the distance outline, the additional requirements specified in this measure will be implemented (additional details are provided in the Construction/Remedial Action Work Plan).	When construction activities are within the distance outline, the additional requirements specified in this measure will be implemented (additional details are provided in the Construction/Remedial Action Work Plan).	
Noise	Noise-2d	d) A disturbance coordinator will be designated by the project applicant, which will post contact information in a conspicuous location near construction areas so that it is clearly visible to nearby receivers most likely to be disturbed. In addition, mailing of the same information will be sent to nearby receptors and all Tribes. The coordinator will manage complaints resulting from the construction noise. Reoccurring disturbances will be evaluated by a qualified acoustical consultant retained by the project applicant to ensure compliance with applicable standards. The disturbance coordinator will contact nearby noise-sensitive receptors, advising them of the construction schedule.	Construction/Remedial Action Work Plan; Plan for Decommissioning and Removal of IM-3 Facility and Site Restoration; Plan for Decommissioning of Remedy Facilities and Restoration	Noise disturbance coordinators have been designated to manage communication with nearby vibration-sensitive receptors, and noise/vibration issues and complaints.	Noise disturbance coordinators have been designated to manage communication with nearby vibration-sensitive receptors, and noise/vibration issues and complaints.	PG&E disturbance coordinators (Curt Russell and Chris Smith) have been designated to manage both noise and vibration concerns that may arise during construction. The disturbance coordinators will post their contact information in a conspicuous location near the construction trailer entrance so that it is clearly visible to nearby receivers. The disturbance coordinator will send the construction schedule to nearby noise-sensitive receptors prior to commencement of that construction work. Should a concern about the actual noise generated by remedy construction arise, PG&E disturbance coordinator will thoroughly investigate and resolve the issue appropriately. A qualified acoustical consultant will evaluate all reoccurring disturbances for compliance with applicable standards. All noise complaints and their resolutions will be recorded, tracked, and reported to DTSC in the quarterly compliance reports.	PG&E disturbance coordinators (Curt Russell and Chris Smith) have been designated to manage both noise and vibration concerns that may arise during construction. The disturbance coordinators will post their contact information in a conspicuous location near the construction trailer entrance so that it is clearly visible to nearby receivers. The disturbance coordinator will send the construction schedule to nearby noise-sensitive receptors prior to commencement of that construction work. Should a concern about the actual noise generated by remedy construction arise, the PG&E disturbance coordinator(s) will thoroughly investigate and resolve the issue appropriately. A qualified acoustical consultant will evaluate all reoccurring disturbances for compliance with applicable standards. All noise complaints and their resolutions will be recorded, tracked, and reported to DTSC in the quarterly compliance reports.	Disturbance coordinators were designated on November 18, 2011
Noise	**NOISE-3**	**Land Use Compatibility of Future Project Noise Levels with Places of Worship and the Topock Cultural Area.** Provided that the proposed project would be required to achieve the normally acceptable exterior noise level standard for places of worship, the following mitigation measure shall be incorporated in the project design:		This mitigation measure will be met through actions taken to implement NOISE-3a and 3b (see below).	This mitigation measure will be met through actions taken to implement NOISE-3a and 3b (see below).	The project has been designed to meet the normally acceptable exterior noise-level standard for places of worship during operation. This mitigation measure also will be met through actions taken to implement NOISE-3a and 3b (see below).	The project has been designed to meet the normally acceptable exterior noise-level standard for places of worship during operation. This mitigation measure also will be met through actions taken to implement NOISE-3a and 3b (see below).	
Noise	NOISE-3a	a) Implement all of the mitigation measures outlined for Impact NOISE- 1 and Impact NOISE-2;		This measure will be met through actions to be taken under mitigation measures outlined for Impact NOISE- 1 and Impact NOISE-2.	This measure will be met through actions to be taken under mitigation measures outlined for Impact NOISE-1 and Impact NOISE-2.	This measure will be met through actions to be taken under mitigation measures outlined for Impact NOISE-1 and Impact NOISE-2.	This measure will be met through actions to be taken under mitigation measures outlined for Impact NOISE-1 and Impact NOISE-2.	See NOISE-1 and NOISE-2. A protocol to implement this measure was included in the CIMP (CUL-1a-8h). The CIMP was included as an appendix to the C/RAWP which was submitted on November 18, 2015.

TABLE L1.1-1
Summary of Compliance with EIR Mitigation Measures
Groundwater Remedy Basis of Design Report/Final (100%) Design
PG&E Topock Compressor Station, Needles, California

Resources	Mitigation Number	Mitigation Measure	Which document(s) will contain or satisfy this measure?[1]	Action (Compliance Status)				Date Completed
				Preliminary (30%) Design	Intermediate (60%) Design	Pre-Final (90%)/Supplemental 90% Design	Final (100%) Design	
Noise	NOISE-3b	b) Upon completion of detailed project design, the determination of remediation activities and the schedule established to achieve these activities shall be communicated to Native American Tribes. PG&E shall maintain a liaison with requesting Tribes to alert them to project activities that would generate new noise in the Topock Cultural Area on at least an annual basis.		This measure will be implemented as directed. A liaison with requesting Native American Tribes will alert them to project activities that would generate new noise in the Topock Cultural Area on at least an annual basis.	This measure will be implemented as directed. A liaison with requesting Native American Tribes will alert them to project activities that would generate new noise in the Topock Cultural Area on at least an annual basis.	This measure will be implemented as directed. A liaison with requesting Native American Tribes will alert them to project activities that would generate new noise in the Topock Cultural Area on at least an annual basis. In addition, the following communication protocols developed as part of the CIMP noise protocol CUL-1a-8h (Section 2.8.4) will also be implemented: All project construction activities will be communicated to nearby noise-sensitive receptors and Interested Tribes. Elements of this communication include: • A detailed project schedule is established and published for all stakeholders. • Monthly notification to agencies and Tribes of scheduled field activities. During periods of extensive construction activity, these notifications will be issued more frequently – weekly and/or daily, as appropriate. • After issuing these notifications, notify the nearby noise-sensitive receptors and Tribes of any schedule changes. • Provide an open-communication process for Tribal representatives to seek more information about Project noise-generating activities. PG&E welcomes Tribal input on timing of Project noise-generating activities and on potential noise-reducing methods. Per CUL-1a-8k, if ceremonies are requested by any Tribe during construction, then PG&E will follow the protocol to accommodate such requests, which could include monitoring to ensure that construction noise does not exceed the normally acceptable exterior noise level standard in San Bernardino County for places of worship. • The contact information for the disturbance coordinator will be posted in a conspicuous location near the construction areas. This information will also be mailed to	This measure will be implemented as directed. The CIMP contains the requirement to communicate the remediation activities and schedule to the Tribes (see, e.g., CIMP sections 2.1, 2.4, and 2.10) and to maintain a liaison with requesting Native American Tribes to alert those Tribes to project activities that would generate new noise in the Topock Cultural Area on at least an annual basis (CIMP section 2.8.5). Mitigation Measure CUL-1a-8h addresses other measures to minimize impacts to cultural resources from project-related noise. See Mitigation Measure CUL-1a-8h for those measures.	A protocol to implement this measure was included in the CIMP (CUL-1a-8h). The CIMP was included as Appendix H to the C/RAWP which was submitted on November 18, 2015.

TABLE L1.1-1
Summary of Compliance with EIR Mitigation Measures
Groundwater Remedy Basis of Design Report/Final (100%) Design
PG&E Topock Compressor Station, Needles, California

Resources	Mitigation Number	Mitigation Measure	Which document(s) will contain or satisfy this measure?[1]	Action (Compliance Status)				Date Completed
				Preliminary (30%) Design	Intermediate (60%) Design	Pre-Final (90%)/Supplemental 90% Design	Final (100%) Design	
						all nearby noise-sensitive receptors and Interested Tribes. In addition to the communication methods described above, PG&E will also consider posting construction schedule information at the information kiosk (CUL-1a-3c). PG&E may also decide to use other communication processes, including a Project website (a Project website could list Project activity schedules and other Project related information) that could be accessed by computer or smartphone and/or other simple push applications that apply to mobile devices.		
Water Supply	WATER-1	**Depletion of Groundwater.** To mitigate potentially significant effects on local groundwater levels associated with the freshwater extraction wells, in the event that freshwater is to be supplied from wells rather than from a surface intake, a hydrologic analysis shall be conducted during the design phase of the project to evaluate the proposed pumping rates for extraction, the potential cone of depression, and the extraction effect on any existing wells in proximity. Proximity shall be defined by the cone of depression boundary of any well to be used in the extraction process. Extraction well location and/or extraction rates shall be adjusted during project design based on this analysis to ensure that extraction does not substantially adversely affect the production rates of existing nearby wells (e.g., adversely affect well production such that existing land uses would not be supported). It shall be demonstrated using computer simulations or other appropriate hydrologic analysis that production rates of existing nearby wells will not be substantially affected before the installation of any new freshwater extraction wells.	Alternative Freshwater Sources Evaluation Technical Memorandum	Work on the required hydrologic analysis has commenced and will be reported in the intermediate (60%) design.	A plan for conducting a long-term constant-rate extraction test at HNWR-1 well is included in the *Revised Implementation Plan for Evaluation of Alternative Freshwater Sources* (CH2M HILL 2013c). Upon receipt of agencies' approval, PG&E will implement the plan. Data collected will be used to evaluate compliance with this measure.	A 72-hour constant-rate extraction test at Havasu National Wildlife Refuge (HNWR)-1 well was conducted in February 11-14, 2014 in accordance with the *Final Implementation Plan for Evaluation of Alternative Freshwater Sources* (CH2M HILL, 2013j). In addition, a 72-hour constant-rate extraction test was conducted at the Site B well from February 7 to 10, 2014. Test results indicated that existing nearby wells will not be substantially affected by pumping at the potential freshwater sites. PG&E presented the information to agencies, Tribes, and stakeholders at the March 19, 2014 TWG meeting, and summarized the results in a technical memorandum (CH2M HILL 2014b) for submittal to DTSC and DOI on April 2, 2014.	A 72-hour constant-rate extraction test at Havasu National Wildlife Refuge (HNWR)-1 well was conducted in February 11-14, 2014 in accordance with the *Final Implementation Plan for Evaluation of Alternative Freshwater Sources* (CH2M HILL, 2013j). In addition, a 72-hour constant-rate extraction test was conducted at the Site B well from February 7 to 10, 2014. Test results indicated that existing nearby wells will not be substantially affected by pumping at the potential freshwater sites. PG&E presented the information to agencies, Tribes, and stakeholders at the March 19, 2014 TWG meeting, and summarized the results in a technical memorandum (CH2M HILL 2014b) for submittal to DTSC and DOI on April 2, 2014.	A 72-hour constant rate extraction test was conducted at potential freshwater supply wells (HNWR-1 and Site B) in February 2014. Test results indicated that existing nearby wells will not be substantially affected by pumping at the potential freshwater sites. Results were summarized in a technical memorandum (CH2M HILL, 2014j) and submitted to DTSC and DOI on April 2, 2014. The memorandum is also included in Appendix N of this report.

Notes:

[1] The intent of this column is to identify what current or future document(s) are intended to satisfy this measure and be transparent on future forthcoming documentation. This column is not intended to document compliance with the mitigation measure.

EXHIBIT L1.1-1

Protocol for Compliance with EIR MMRP Mitigation Measure BIO-1 and ARAR #32 at the Topock Compressor Station

Groundwater Remedy Basis of Design Report/Final (100%) Design
PG&E Topock Compressor Station, Needles, California

Application of Section 404 of the Clean Water Act to the Project

Pacific Gas & Electric Company (PG&E) has prepared this protocol to identify procedures to be taken to ensure compliance with Section 404 of the Clean Water Act (CWA) and for the Topock Remediation Project (the project) located at the Topock Compressor Station in Needles, California. Section 404 of the CWA is an Applicable or Relevant and Appropriate Requirement (ARAR) for the project. Additionally, the Final Environmental Impact Report (EIR) Mitigation and Monitoring Reporting Program (MMRP; California Department of Toxic Substances Control [DTSC] 2011c) mitigation measure BIO-1 contains applicable mitigation requirements related to CWA Section 404.

The text of MMRP BIO-1 (excerpted) and ARAR #32 are as follows:

> **BIO-1:** "If during the design process it is shown that complete avoidance of habitats under U.S. Army Corps of Engineers (USACE) jurisdiction is not feasible, the Section 404 permitting process shall be completed, or the substantive equivalent per CERCLA Section 121(e)(1). In either event, the acreage of affected jurisdictional habitat shall be replaced and/or rehabilitated to ensure 'no-net-loss' Before any ground-disturbing Project activities begin in areas that contain potentially jurisdictional wetlands, the wetland delineation findings shall be documented in a detailed report and submitted to USACE for verification as part of the formal Section 404 wetland delineation process and to DTSC. For all jurisdictional areas that cannot be avoided as described above, authorization for fill of wetlands and alteration of waters of the United States shall be secured from USACE through the Section 404 permitting process before project implementation. Habitat restoration, rehabilitation, and/or replacement shall be at a location and by feasible methods agreeable to USACE and consistent with applicable county and agency policies and codes. Minimization and compensation measures adopted through any applicable permitting processes shall be implemented.
>
> Alternatively, if USACE declines to assert jurisdiction because it determines that CERCLA Section 121(e)(1) applies, the substantive equivalent of the Section 404 permitting process shall be complied with by ensuring that the acreage of jurisdictional wetland affected is replaced on a "no-net-loss" basis in accordance with the substantive provisions of USACE regulations. Habitat restoration, rehabilitation, and/or replacement shall be at a location and by feasible methods consistent with USACE methods, and consistent with the purpose and intent of applicable county and agency policies and codes. Minimization and compensation measures adopted through any applicable permitting processes shall be implemented. In any event, a report shall be submitted to DTSC to document compliance with these mandates."
>
> **ARAR #32**: "This section of the Clean Water Act prohibits certain activities with respect to on-site wetlands and waterways. No discharge of dredged or fill material shall be permitted if there is a practicable alternative to the proposed activity which would have less adverse impact to the aquatic ecosystem." Federal Water Pollution Control Act (Clean Water Act), 33 USC § 1344, 40 CFR 230.10.

Under CWA Section 404, activities that discharge dredged or fill material into waters of the United States typically require a CWA Section 404 permit from the USACE.

PG&E has determined that the Topock Remediation Project would result in a discharge of dredged or fill material into jurisdictional waters and wetlands. However, the project is a CERCLA response action, and therefore the permit exemption at CERCLA Section 121(e)(1) applies to the project's on-site activities.[3] Therefore, PG&E is not required to

[3] *See* 42 U.S.C. 9921(e)(1) ("No Federal, State, or local permit shall be required for the portion of any removal or remedial action conducted entirely on-site where such remedial action is selected and carried out in compliance with this section."); DOI Memorandum, dated November 16, 2007.

comply with the procedural permitting requirements under Section 404. Although no CWA Section 404 permit is required for the Project, PG&E must still comply with the substantive requirements of the CWA Section 404.

PG&E received a letter from the USACE Los Angeles District Regulatory Program, dated July 10, 2013 (USACE 2013a), which stated that no permit is required for the Topock Remediation Project because the project is proceeding pursuant to the U.S. Department of the Interior's (DOI) CERCLA authority. Further, the USACE confirmed that no "substantive requirements or applicable conditions" were provided and the USACE would not verify PG&E's wetland delineation because no permit is required for the CERCLA action (USACE 2013b).

Section 404(b)(1) of the CWA requires that alternatives (or proposed actions) be designed to avoid or minimize adverse impacts to aquatic resources and waters of the United States. Compliance with the 404(b)(1) Guidelines can be achieved generally through the use of appropriate and practicable mitigation measures to minimize or compensate for potential adverse impacts of the discharge on the aquatic ecosystem (40 CFR 230.10(d)). Compensatory mitigation is considered after other appropriate and practicable options have been addressed to avoid and minimize adverse impacts to the aquatic environment. "Practicable" is defined in 40 CFR 230.3(q) to mean "available and capable of being done after taking into consideration cost, existing technology, and logistics in light of overall project purposes."

Further, Section 404(b)(1) requires the least environmentally damaging practicable alternative be selected. During the course of the groundwater remedy design (including the Alternative Freshwater Source Evaluation), efforts were undertaken to avoid and minimize impacts to jurisdictional waters of the United States. However, it has been determined that in order to meet the goals of protection of human health and the environment, to meet the RAOs for the remedy, to monitor remedy performance, to gather data for demonstration of compliance, as well as in response to resolution of design comments with the Tribes, infrastructure (remediation, monitoring wells, and associated piping/conduits) must be installed in certain washes. There are no practicable alternatives to locating certain infrastructure within waters of the United States. For example, monitoring well Q is sited in a wash because it is designed to monitor the effects of injection from well IRL-4, which was placed in a wash as a result of comment resolution at 30% design. Also, to minimize new infrastructure, the remedy design incorporates all existing monitoring wells into the remedy monitoring program. Some of the existing wells are located in Bat Cave Wash and the East Ravine.

1. Avoidance of Adverse Impacts to Wetlands and Non-Wetland Waters of the U.S.

In order to achieve the goal of no-net loss of jurisdictional waters of the U.S., including wetlands, avoidance and minimization measures (AMMs) have been and will continue to be implemented during implementation of the remedy. PG&E prepared a Final Wetlands and Waters of the U.S. Delineation Report (CH2M HILL 2014c), delineating jurisdictional waters of the U.S., that was submitted to DTSC and DOI in April 2014, and has taken the location of jurisdictional waters of the U.S. into consideration in the design of the groundwater remedy in order to avoid impacts to jurisdictional wetlands and waters of the U.S. to the extent practicable.

During the design phase, PG&E's design team consulted the Wetlands and Waters of the U.S. Delineation Report while considering the location of remedy infrastructure. PG&E's design team prioritized avoidance of all wetland and non-wetland waters of the U.S. During the design, PG&E implemented avoidance, to the extent practicable, and impacts to jurisdictional waters would occur only when there is no practicable alternative available.

2. Minimization of Adverse Impacts to Wetlands and Non-Wetland Waters of the U.S.

Consistent with 40 CFR 230.10(d) and Subpart H of Part 40 CFR 230 requirements to minimize the adverse effects of the discharge of dredged or fill material associated with the Topock Remediation Project, PG&E has implemented AMMs during the design phase and will continue to implement best management practices (BMPs) during construction of the remedy in order to minimize adverse impacts to wetlands and non-wetland waters of the U.S.

Minimization measures will be implemented to minimize impacts to wetland and non-wetland waters of the United States within the Project area. All efforts will be taken to avoid jurisdictional resources to the extent practicable. Although the USACE did not provide a list of measures that may be taken to reduce impacts to jurisdictional waters and wetlands, the California Department of Fish and Wildlife (CDFW) requires compliance with AMMs in lieu of a Lake or Streambed Alteration Agreement pursuant to CERCLA Section 121(e) for all work conducted in CDFW jurisdictional washes (CDFW 2013). The geographic extent of CDFW's jurisdiction under California law is broader than the

jurisdictional extent of the USACE under CWA 404 and thus avoidance and mitigation measures applied to CDFW jurisdictional waters would as a geographic consequence also be applied to CWA 404 waters. While Arizona does not have a similar state program, PG&E has implemented and will continue to implement the same AMMs in Arizona identified by CDFW for California to ensure appropriate protection to CWA 404 jurisdictional areas in the project limits, including those in Arizona. Thirty-four AMMs are to be implemented by PG&E for CDFW jurisdictional washes. Actions taken by PG&E, including in the design phase, to avoid and minimize impacts to jurisdictional wetlands and waters will be recorded in a table and maintained by PG&E for the Project.

Remedy Construction, Operation, Maintenance, and Decommissioning BMPs. During construction, operation, maintenance, and decommissioning, certain best management practices would be implemented to avoid and minimize temporary and permanent impacts for activities occurring within jurisdictional wetlands and non-wetland waters of the U.S. These techniques include flagging or fencing around jurisdictional resources, reducing soil erosion/runoff, sediment controls, spill controls, and other BMPs as described in Best Management Practices and Wetlands Avoidance Measures (see Attachment 1 on the following page) and the CDFW AMMs.

3. Compensatory Mitigation

Under the *2008 Compensatory Mitigation for Losses of Aquatic Resources, Final Rule*, compensatory mitigation requires actions that offset the unavoidable adverse impacts to wetlands, streams, and other aquatic resources authorized by Department of the Army permits. Compensatory mitigation is only considered when all appropriate and practicable steps have been taken to avoid and minimize adverse impacts to the aquatic ecosystem. Compensatory mitigation can be implemented by restoration, enhancement, establishment, or preservation. Restoration involves restoring a previously-existing wetland or aquatic site, enhancement involves improving or enhancing the functions of an existing aquatic site, establishment is the creation of a new aquatic site, and preservation involves an existing aquatic site. Compensatory mitigation can be provided by three methods: permittee-responsible compensatory mitigation, mitigation banks, and in-lieu fee mitigation. Further, compensatory mitigation should be commensurate with the amount and type of impact associated with the project.

PG&E will calculate temporary and permanent impacts to jurisdictional waters of the United States resulting from project activities prior to construction and periodically thereafter if additional impacts occur. Temporary impacts to waters of the United States will be restored on site, where possible. Otherwise, impacts will be treated as permanent impacts.

At the Topock Remediation Project, PG&E plans to implement mitigation bank compensatory mitigation for permanent loss of waters of the U.S. at the project site, where reasonably available. Mitigation banks involve off-site compensation under the direction of a third party who ensures that compensation is completed and that no-net loss of wetlands and non-wetland waters is successful. Mitigation bank credits are the preferred option for successfully providing compensatory mitigation under the Final Rule. Restoration is the preferred method of mitigation, and PG&E will attempt to fund a mitigation bank that provides restoration of wetlands at a 1:1 ratio of impact to wetlands, where possible. If a wetland restoration bank is unavailable then an enhancement or preservation bank, or other appropriate option, would be suitable. PG&E will also provide compensatory mitigation for impacts to non-wetland waters of the U.S. at a 1:1 ratio.

ATTACHMENT 1 TO PROTOCOL FOR PG&E COMPLIANCE WITH EIR MMRP MITIGATION MEASURE BIO-1 AND ARAR #32 AT THE TOPOCK COMPRESSOR STATION

Best Management Practices and Wetlands Avoidance Measures

The potential impacts to jurisdictional waters associated with implementation of the Final Groundwater Remedy at the Topock Compressor Station may be permanent or temporary. Permanent impacts are those that are associated with the construction of the new remedy facilities themselves, which will remain in place during the operation phase until decommissioning and removal. These facilities include new wells, pipelines, and ancillary facilities (e.g., drainage features, remote monitoring equipment, and security fencing). Temporary impacts are those that are associated with construction activities that may require removal of vegetation or soil disturbance from construction activities (i.e., access roads) but will not result in permanent modifications to the bed, bank or channel of waterways.

The following wetland avoidance measures and Best Management Practices (BMPs) will be employed for the Topock Final Remedy Project:

1. A delineation of wetlands and waters of the United States has been prepared for the proposed project area, and submitted to DTSC (CH2M HILL 2014c). This delineation has informed the remedial design and was used to avoid or minimize impacts to sensitive resources. In addition to the mapping of federal jurisdictional wetlands and waters of the U.S., there was also a determination of the areas that are jurisdictional by CDFW under Section 1600. The CERCLA Section 121(e) exemption for the Topock Program obviates the need to secure permits from the U.S. Army Corps of Engineers or from CDFW, however, the substantive requirements of applicable state and federal laws are satisfied. A March 6, 2013 letter from CDFW confirming application of the CERCLA Section 121(e) exemption to the Topock Final Remedy Project and stating that PG&E need not obtain a Lake or Streambed Alteration Agreement, was accompanied by a list of Avoidance and Minimization Measures for the Project.

2. When planned work activities occur near or within jurisdictional wetland and waters, a biological monitor will provide a worker environmental awareness training to construction crews. The training will include information on sensitive biological resources that may occur in construction areas and the requirements to protect those resources. The training will also include information about BMPs to avoid potential indirect impacts to water quality at the project location or in downstream areas as described in the CDFW AMMs. PG&E's construction foreman will be responsible for verifying that all construction workers completed the training prior to beginning work at the project site.

3. Where boundaries of jurisdictional wetlands or waters are found in close proximity to planned construction activities, these features will be clearly demarcated in the field using flagging or brightly colored mesh fencing in order to ensure that they are not inadvertently impacted. The demarcation will be conducted under the supervision of a qualified biologist. The biologist will also survey any vegetation areas prior to clearing or cutting to ensure that there are no sensitive biological resources (such as active bird nests) that might be affected. The pre-construction survey will also include photographic documentation of pre-project conditions.

4. Access routes that pass through jurisdictional wetlands and waters, if needed, will be identified in order to minimize the impacts to perennial vegetation (e.g., trees and shrubs). Where impacts cannot be avoided to arrowweed stands within the historical floodplain, the stems of these plants will be cut to approximately 1 to 1 ½ feet above the ground surface. Then plastic sheeting or a tarp will be placed over the cut stems prior to crossing the area with construction vehicles. This approach will favor ready re-growth of the cut plants after the completion of construction activities. Any protected perennial trees or shrubs that are removed as a result of this project will be mitigated as part of the revegetation planning process.

5. Pre-construction surveys for listed species or actively nesting birds will be conducted immediately prior to the start of construction and after demarcation. Should any listed individuals or active nests be identified, the PG&E biologist will contact the United States Fish and Wildlife Service (USFWS) to determine an appropriate response. Only a biologist with an active Section 10(a) permit will be authorized to remove any individuals from the construction areas to a USFWS-approved release location.

6. The boundaries of the construction work zones and staging (supporting) areas including access routes will follow existing routes as much as possible. All construction work zones will be shown on detail site maps and demarcated in the field. No construction activities, vehicular access, equipment storage, stockpiling, or significant human intrusion will be allowed outside of the designated construction work zone and staging areas.

7. Equipment will not be operated in areas of ponded or flowing water, and no wet excavations will be performed during construction. Construction vehicles and equipment will be checked periodically to ensure that they are in proper working condition and that there are no apparent oil or fuel leaks. Onsite refueling or lubrication of vehicles and cleaning of equipment, or other activities that involve the use of fuels, lubricants, or solvents, will occur only in locations that are away from jurisdictional wetlands and waters.

8. Compliance with the above AMMs within jurisdictional waters will be tracked and reported to DTSC in the quarterly EIR mitigation measures compliance reports.

9. At project completion, the designated biological monitor will return to the site to document the post-construction conditions at the site. Information on the pre-and post-construction conditions will be documented in the Remedial Action Construction Completion Report. Post-construction conditions will be documented with photographs.

TABLE L1.1-2
Summary of Compliance with Cultural Impact Mitigation Program (CIMP) Protocols
Groundwater Remedy Basis of Design Report/Final (100%) Design
PG&E Topock Compressor Station, Needles, California

Item No.	Reference Location in CIMP Document	Protocols/Relevant Excerpts from Document	Action (Compliance Status)	
			Pre-Final (90%)/Supplemental 90% Design	Final (100%) Design
1	Section 2.1	CUL-1a-8a: Protocols for Continuation of Tribal Communications This protocol requires that communication be consistent with past practices and communication processes previously entered into by PG&E with Interested Tribes, and that PG&E would continue to communicate with Interested Tribes during the design, construction, operation, and decommissioning of the project. Prior to implementation of construction. For examples of communication procedures consistent with past practices, see CIMP Section 2.1. Prior to implementation of construction, PG&E shall communicate with Interested Tribes that place cultural significance on the Topock Cultural Area. Outreach efforts between the Tribes and PG&E shall be communicated by PG&E to DTSC quarterly during the design and construction phase for review and input, and annually during project operations.	PG&E has communicated with the Interested Tribes and will continue to communicate with them during all phases of the Project from design and construction through operation and maintenance as well as decommissioning. Tribes were invited to attend monthly meetings to review pieces of the design as they are prepared and to receive updates on the progress of the project. PG&E also held field meetings with Tribes (e.g., meetings to site well locations, etc.) to assist in Tribal understanding of the remedy design. During construction, PG&E will continue to communicate regularly and will also provide updates on field activities so that Tribal monitors may also participate. Outreach efforts are communicated to DTSC on a quarterly basis during design, and will continue to occur quarterly during construction. As required by DTSC, a log of communications with interested Tribes has been maintained and included in the quarterly EIR mitigation measure compliance reports since January 2012.	PG&E has communicated with the Interested Tribes and will continue to communicate with them during all phases of the Project from design and construction through operation and maintenance as well as decommissioning. During construction, PG&E will continue to communicate regularly and will also provide updates on field activities so that Tribal monitors may also participate. Outreach efforts were communicated to DTSC on a quarterly basis during design, and will continue to occur quarterly during construction. As required by DTSC, a log of communications with interested Tribes has been maintained and included in the quarterly EIR mitigation measure compliance reports since January 2012.
2	Section 2.2	CUL-1a-8b: Protocols for Appropriate Treatment of Archaeological Materials These protocols include the following components: • Protocols for the appropriate treatment of archaeological materials that may be disturbed or discovered during implementation of the final remedy – Avoidance is preferred (by PG&E and Tribes) means of treatment in a discovery situation. If PG&E recommends that avoidance is not feasible and the Agencies make a determination that it is not feasible, then the protocols of Discovery Plan of the CHPMP will be followed for appropriate treatment of discoveries. • Protocols for the repatriation of significant items of cultural patrimony that may be recovered during the project • Protocols for the curation of cultural materials recovered during the project. • Treatment of archaeological sites, if data recovery is proposed	During design and construction, if discoveries are made, avoidance is the preferred method of treatment of discoveries. If, however, Agencies make a determination that avoidance is not feasible, PG&E will provide treatment of archaeological materials as outlined in Appendix C (Discovery Plan) of the CHPMP. As described in the protocol, during design and construction, Native American human remains and/or archaeological materials from federal or Tribal land that are funerary objects, or ceremonial objects, or objects of cultural patrimony will be treated as prescribed in the Native American Graves Protection and Repatriation Act (NAGPRA) and its implementing regulations (43 Code of Federal Regulations [CFR] 10), and as discussed in Section 8.2 (Treatment of Any Human Remains, Funerary Objections, Ceremonial Objects and Items of Cultural Patrimony) and Appendix D (Plan of Action) of the CHPMP (BLM 2012). If data recovery is proposed for treatment of an archaeological site, PG&E will follow the steps outlined in Section 2.2.3 of the CIMP.	During design and construction, if discoveries are made, avoidance is the preferred method of treatment of discoveries. If, however, Agencies make a determination that avoidance is not feasible, PG&E will provide treatment of archaeological materials as outlined in Appendix C (Discovery Plan) of the CHPMP. As described in the protocol, during design and construction, Native American human remains and/or archaeological materials from federal or Tribal land that are funerary objects, or ceremonial objects, or objects of cultural patrimony will be treated as prescribed in the Native American Graves Protection and Repatriation Act (NAGPRA) and its implementing regulations (43 Code of Federal Regulations [CFR] 10), and as discussed in Section 8.2 (Treatment of Any Human Remains, Funerary Objections, Ceremonial Objects and Items of Cultural Patrimony) and Appendix D (Plan of Action) of the CHPMP (BLM 2012). If data recovery is proposed for treatment of an archaeological site, PG&E will follow the steps outlined in Section 2.2.3 of the CIMP.
3	Section 2.3	CUL-1a-8c: Protocols for the Review of Cultural Resource-Related Documents These protocols apply to the extent that the BLM has not consulted with Tribes under the consultation process in the Programmatic Agreement and referenced in the CHPMP, and include the following: • Review of cultural resource related documents, including timelines and procedures are specified in detail at Section 2.3.2. • PG&E will afford the Tribes an opportunity to review and comment on Project cultural resource-related documents • Standards as stipulated in the Programmatic Agreement Section XI will be implemented. (Section 2.3.4)	To date, the review of cultural resource related documents has occurred under the procedures identified by the Programmatic Agreement and referenced in the CHPMP. Certain EIR-required cultural resource related documents have also been sent to DTSC for review.	To date, the review of cultural resource related documents has occurred under the procedures identified by the Programmatic Agreement and referenced in the CHPMP. Certain EIR-required cultural resource related documents have also been sent to DTSC for review.
4	Section 2.4	CUL-1a-8d: Protocols for the Review of Project Design Documents These protocols provide for the review of the Topock Compressor Station Groundwater Remediation Project (Project) Design Documents at the Preliminary, Intermediate, and Pre-final phases. In general, at the preliminary phase of each design, PG&E will submit the design document to DTSC/DOI who will then submit to reviewers and invite their initial comments. See CIMP Figure 2-1 for a complete overview of the review process during design.	PG&E has followed the protocols outlined in Figure 2-1 of the CIMP regarding the review of design documents at the 30%, 60%, and 90% design phases.	Pursuant to 90% RTC #7, PG&E understands that there will not be a comment/review process for the final design.

TABLE L1.1-2
Summary of Compliance with Cultural Impact Mitigation Program (CIMP) Protocols
Groundwater Remedy Basis of Design Report/Final (100%) Design
PG&E Topock Compressor Station, Needles, California

Item No.	Reference Location in CIMP Document	Protocols/Relevant Excerpts from Document	Action (Compliance Status)	
			Pre-Final (90%)/Supplemental 90% Design	Final (100%) Design
5	Section 2.5	CUL-1a-8e: Protocols for Restoring the Environment to Its Preconstruction Conditions Upon Decommissioning The protocol presents the general approach for restoration of the areas affected by the groundwater remediation facilities. Restoration activities include grading, contouring, and revegetating the site. The restoration approach will be informed by documentation of the pre-construction condition (e.g., ground photographic records, topographic/aerial maps, disturbed area map, archaeological surveys, historical resource surveys, biological surveys). PG&E will seek ways to restore the affected areas to the conditions prior to construction, as closely as possible. Discussions will take place with the Tribes to develop an understanding of the different restoration techniques and expectations for different environments. For additional details, see Sections 2.5.3 (Restoration Guidelines) and 2.5.4 (Habitat Restoration and Revegetation).	A Plan for Decommissioning of Remedy Facilities and Restoration will be completed within 120 days of DOI's certification of completion of the remediation and a determination by DOI that removal of such facilities is protective of human health and the environment. This Restoration Plan will be developed in consultation with the land owners and managers, including FMIT, U.S. Bureau of Reclamation (USBR), and BLM. The BLM will consult with Signatories, Tribes, and Invited Signatories to the PA on the Restoration Plan. PG&E will implement the Plan to restore the site to conditions existing prior to the construction of the groundwater remediation facilities to the maximum extent practicable.	A Plan for Decommissioning of Remedy Facilities and Restoration will be completed within 120 days of DOI's certification of completion of the remediation and a determination by DOI that removal of such facilities is protective of human health and the environment. This Restoration Plan will be developed in consultation with the land owners and managers, including FMIT, U.S. Bureau of Reclamation (USBR), and BLM. The BLM will consult with Signatories, Tribes, and Invited Signatories to the PA on the Restoration Plan. PG&E will implement the Plan to restore the site to conditions existing prior to the construction of the groundwater remediation facilities to the maximum extent practicable.
6	Section 2.6	CUL-1a-8f: IM-3 Decommissioning Plan	The IM-3 Decommissioning, Removal, and Restoration Work Plan is included as Appendix B of the CIMP and also as an appendix of the Construction/Remedial Action Work Plan.	The IM-3 Decommissioning, Removal, and Restoration Work Plan was revised to incorporate comments and is included as Appendix B of the CIMP and also as an appendix of the Construction/Remedial Action Work Plan.
7	Section 2.7	CUL-1a-8g: Protocols for Repatriation of Clean Soils During Construction Specifically, the management protocol for Handling and Disposition of Displaced Site Material requires work plans that involve activities that displace site material (and that are finalized subsequent to the development of the protocol) to include the following information: • The process for soliciting and considering the inputs of Tribe(s) regarding the management of the material that is displaced as a result of the work. • Details on material handling and short-term/long-term storage (including an inventory of materials displaced by the work). • Process for assessing contamination assessment. • Final disposition alternatives for displaced material.	The Soil Management Plan (SMP) (Volume 4 of the O&M Manual) contains procedures and protocols for the management and disposal of displaced soil including potentially contaminated soil, during drilling, construction, operation, and maintenance of the remedy as well as decommissioning of IM-3 facilities. The procedures and protocols included soil and waste characterization, screening and classification of soils, handling and short-term storage of soils, long-term storage of soils, transportation and disposal of hazardous wastes, and record keeping. Additional procedures and protocols for handling, management, and disposal of other waste streams that could be generated from remedy construction and start-up are included in the Waste Management Plan in an appendix of the Construction/ Remedial Action Work Plan.	The Soil Management Plan (SMP) (Volume 4 of the O&M Manual) was revised to incorporate comments. Additional procedures and protocols for handling, management, and disposal of other waste streams that could be generated from remedy construction and start-up are included in the Waste Management Plan in an appendix of the Construction/ Remedial Action Work Plan.
8	Section 2.8	CUL-1a-8h: Noise Protocols <u>Pre-Construction (Section 2.8.3)</u> a) Establish a disturbance coordinator, who will coordinate both noise and vibration concerns that may arise during construction. b) Identify and coordinate activities where Noise-2 requires noise monitoring. Noise-2 states that noise monitoring will be conducted when construction activities are conducted within 1,850 feet and 5,830 feet from California receptors and 330 feet and 735 feet from Arizona receptors for daytime and nighttime noise, respectively. c) If noise monitoring during construction is required, noise monitoring locations will be selected in coordination with the Tribes. The EIR MMRP requires that noise measurements be conducted at the nearest noise-sensitive land use relative to the construction activities. d) Examples of noise barriers that could be used during construction to mitigate noise concerns (e.g., berms, stockpiles, dumpsters, bins, and engineered acoustical barriers), and approaches for implementation, will be included in the Construction/Remedial Action Work Plan for review and comment by Tribes and agencies. In the unlikely event that engineered acoustical barriers are required during construction, they will comply with requirements of the EIR. <u>Construction (Section 2.8.3)</u> e) If noise monitoring finds that the relevant noise thresholds are exceeded, temporary noise barriers will be erected. f) Maintain all construction equipment according to manufacturer guidelines. Equipment will be fitted with the best available noise suppression devices. All impact tools will be shrouded or shielded, and all intake or exhaust ports on power equipment will be muffled or shielded. g) Construction equipment will not be allowed to idle for extended periods of time (more than 15 minutes) when not being used for construction. h) Should a concern about the actual noise generated by remedy construction arise, PG&E disturbance coordinator will thoroughly investigate and resolve the issue appropriately. A qualified acoustical consultant (INCE Board Certified or Professional Engineer in	<u>Pre-Construction</u> a) PG&E disturbance coordinators, Curt Russell and Chris Smith, will coordinate both noise and vibration concerns that may arise during construction. b) Noise monitoring locations will be the boundary of noise receptors as defined by EIR MMRP NOISE-2 facing the project-related construction activities. The precise monitoring locations will be determined in the field by a qualified acoustical consultant in coordination with the Tribes. c) Section 4 of the Construction/Remedial Action Work Plan contains examples of noise barriers that could be used during construction to mitigate noise concerns. Protocols during construction, operation and maintenance, and decommissioning will be adhered to during implementation of each phase. Compliance actions will be documented and reported to DTSC in the quarterly compliance reports. <u>Communication (Section 2.8.4)</u> • A detailed construction schedule is established and included in the Construction/Remedial Action Work Plan for review by agencies, stakeholders, and Tribes.	<u>Pre-Construction</u> a) PG&E disturbance coordinators, Curt Russell and Chris Smith, will coordinate both noise and vibration concerns that may arise during construction. b) Noise monitoring locations will be the boundary of noise receptors as defined by EIR MMRP NOISE-2 facing the project-related construction activities. The precise monitoring locations will be determined in the field by a qualified acoustical consultant in coordination with the Tribes. c) Section 4 of the Construction/Remedial Action Work Plan contains examples of noise barriers that could be used during construction to mitigate noise concerns. Protocols during construction, operation and maintenance, and decommissioning will be adhered to during implementation of each phase. Compliance actions will be documented and reported to DTSC in the quarterly compliance reports. <u>Communication (Section 2.8.4)</u> • A detailed construction schedule is established and included in the Construction/Remedial Action Work Plan for review by agencies, stakeholders, and Tribes.

TABLE L1.1-2
Summary of Compliance with Cultural Impact Mitigation Program (CIMP) Protocols
Groundwater Remedy Basis of Design Report/Final (100%) Design
PG&E Topock Compressor Station, Needles, California

Item No.	Reference Location in CIMP Document	Protocols/Relevant Excerpts from Document	Action (Compliance Status)	
			Pre-Final (90%)/Supplemental 90% Design	Final (100%) Design
		Acoustics) will evaluate all reoccurring disturbances for compliance with applicable standards. Noise measurements will be in accordance with the Topock Sound Measurement Protocol in the Basis of Design Report and the forthcoming Remedial Action Work Plan. All noise complaints and its resolutions will be recorded, tracked, and reported to DTSC in the quarterly compliance reports. Operation and Maintenance (Section 2.8.3) i) Should a concern about the actual noise generated by remedy operation arise, PG&E disturbance coordinator will thoroughly investigate and resolve the issue appropriately. A qualified acoustical consultant will evaluate all reoccurring disturbances for compliance with applicable standards. Noise measurements will be in accordance with the Topock Project Sound Measurement Protocol. All noise complaints and their resolutions will be recorded, tracked, and reported to DTSC in the quarterly compliance reports. j) If a new well needs to be installed or an existing well has to rebuilt during the operation phase, these activities are considered short-term construction activities and all noise protocols for pre-construction and construction phases will apply. Decommissioning (Section 2.8.3) k) Decommissioning are considered short-term construction activities. All noise protocols for pre-construction and construction phases will also apply to the decommissioning phase. Communication (Section 2.8.4) -All Project construction activities shall be communicated to nearby noise-sensitive receptors and Interested Tribes. Elements of this communication include: • A detailed project schedule is established and published for all stakeholders. • Monthly notification to agencies and Tribes of scheduled field activities. During periods of extensive construction activity, these notifications will be issued more frequently – weekly and/or daily, as appropriate. • After issuing these notifications, notify the nearby noise-sensitive receptors and Tribes of any schedule changes. • Provide an open-communication process for Tribal representatives to seek more information about Project noise-generating activities. PG&E welcomes Tribal input on timing of Project noise-generating activities and on potential noise-reducing methods. • The contact information for the disturbance coordinator will be posted in a conspicuous location near the construction areas. This information will also be mailed to all nearby noise-sensitive receptors and Interested Tribes. In addition to the communication methods described above, PG&E will also consider posting construction schedule information at the information kiosk (CUL-1a-3c). PG&E may also decide to use other communication processes, including a Project website (a Project website could list Project activity schedules and other Project related information) that could be accessed by computer or smartphone and/or other simple push applications that apply to mobile devices.	• Monthly notification to agencies and Tribes of scheduled field activities has been and will continue to be sent by PG&E (Curt Russell or his designee). During periods of extensive construction activity, these notifications will be issued more frequently – weekly and/or daily, as appropriate. This element has been incorporated into the overall communication framework for construction and start-up (see Table 2.3-1 of the Construction/Remedial Action Work Plan). • After issuing these notifications, PG&E will notify the nearby noise-sensitive receptors and Tribes of any schedule changes. Nearby noise-sensitive receptors are residents of the mobile home park at Moabi Regional Park and the Topock Marina, as well as private residents in Topock Marina area. When construction activities occur within 1,850 feet of noise-sensitive receptors to the east, PG&E will post contact information in a conspicuous location near construction areas so that it is clearly visible to nearby sensitive receptors. In addition, mailing of the same information will be sent to those receptors and all Tribes (see Table 2.3-1 of the Construction/Remedial Action Work Plan). • Provide an open-communication process for Tribal representatives to seek more information about Project noise-generating activities. PG&E welcomes Tribal input on timing of Project noise-generating activities and on potential noise-reducing methods. Per CUL-1a-8k, if ceremonies are requested by any Tribe during construction, then PG&E will follow the protocol to accommodate any requests for Tribal ceremonies, which could include monitoring to ensure that construction noise does not exceed the normally acceptable exterior noise level standard in San Bernardino County for places of worship. • The contact information for the Project disturbance coordinators (Curt Russell and Chris Smith) will be posted in a conspicuous location near the construction areas. This information will also be mailed to all nearby noise-sensitive receptors and Interested Tribes. Nearby noise-sensitive receptors include residents at Moabi Regional Park and the Topock Marina area.	• Monthly notification to agencies and Tribes of scheduled field activities has been and will continue to be sent by PG&E (Curt Russell or his designee). During periods of extensive construction activity, these notifications will be issued more frequently – weekly and/or daily, as appropriate. This element has been incorporated into the overall communication framework for construction and start-up (see Table 2.3-1 of the Construction/ Remedial Action Work Plan). • After issuing these notifications, PG&E will notify the nearby noise-sensitive receptors and Tribes of any schedule changes. Nearby noise-sensitive receptors are residents of the mobile home park at Moabi Regional Park and the Topock Marina, as well as private residents in Topock Marina area. When construction activities occur within 1,850 feet of noise-sensitive receptors to the east, PG&E will post contact information in a conspicuous location near construction areas so that it is clearly visible to nearby sensitive receptors. In addition, mailing of the same information will be sent to those receptors and all Tribes (see Table 2.3-1 of the Construction/Remedial Action Work Plan). • Provide an open-communication process for Tribal representatives to seek more information about Project noise-generating activities. PG&E welcomes Tribal input on timing of Project noise-generating activities and on potential noise-reducing methods. Per CUL-1a-8k, if ceremonies are requested by any Tribe during construction, then PG&E will follow the protocol to accommodate any requests for Tribal ceremonies, which could include monitoring to ensure that construction noise does not exceed the normally acceptable exterior noise level standard in San Bernardino County for places of worship. • The contact information for the Project disturbance coordinators (Curt Russell and Chris Smith) will be posted in a conspicuous location near the construction areas. This information will also be mailed to all nearby noise-sensitive receptors and Interested Tribes. Nearby noise-sensitive receptors include residents at Moabi Regional Park and the Topock Marina area.

TABLE L1.1-2
Summary of Compliance with Cultural Impact Mitigation Program (CIMP) Protocols
Groundwater Remedy Basis of Design Report/Final (100%) Design
PG&E Topock Compressor Station, Needles, California

Item No.	Reference Location in CIMP Document	Protocols/Relevant Excerpts from Document	Action (Compliance Status)	
			Pre-Final (90%)/Supplemental 90% Design	Final (100%) Design
9	Section 2.9	CUL-1a-8i: Protocols for the Appropriate Methods, consistent with Mitigation Measures, AES-1 and AES-2, to Reduce Visual Intrusion Additional Design Protocols that PG&E May Employ to Reduce Visual Intrusions (Section 2.9.2) In addition to the specific requirements identified in AES-1 and AES-2, PG&E may employ various feasible design concepts identified by PG&E, Tribes, or other interested parties prior to implementation of a Project activity to reduce visual intrusions of the Project design. Potential design concepts include: • Construction of aboveground facilities within existing facilities, when appropriate. • Building designs that are harmonious with existing buildings and nearby landforms, including low profiles when available. • Flush-mount or below-ground installations whenever feasible. • Construction within existing transportation corridors. • Working only within previously-disturbed sites, whenever possible. • Placing aboveground facilities away from traffic, where feasible (i.e., areas where the introduction of the facilities would not create safety issues or visual impacts), to reduce the need for traffic barricades. • Design the lighting associated with above ground facilities to minimize glare and to focus lighting within a facility (e.g., using shields on lighting to reflect light downward and focused within a facility). Opportunity for Agency, Tribal, and Other Stakeholder Input on the Visual Nature of Project Design (Section 2.9.3) Within the design packages, PG&E will include visualizations of various design features described within the text and drawings in the package. Although the visualizations will not be comprehensive of the entire project, they will include many of the aboveground facilities that may be visible to stakeholders after construction. Potential Temporary Visual Intrusions Identified During Remedy Implementation (Section 2.9.4) During the course of remedy implementation, if agencies, Tribes, or other stakeholders identify temporary visual intrusions that should be addressed by PG&E, they should notify the Project Disturbance Coordinator(s), who will be responsible for resolving the issue or coordinating resolution of the issue with the Tribes, DTSC, other agencies, and/or stakeholders.	See response to EIR mitigation measures AES-1 and AES-2 in Table 6.1-1 for compliance actions. Examples of where the additional protocols were employed during the design to reduce visual intrusions: Building designs that are harmonious with existing buildings and nearby landforms, including low profiles when available. For example, the remedy building inside the compressor station and the TW Bench are designed to be compatible with existing buildings and/or the environment. Flush-mount or below-ground installations whenever feasible. For example, most well head completion is flush-mount and most piping installations are below ground. Construction within existing transportation corridors. For example, the majority of piping corridors are within existing roads. Working only within previously-disturbed sites, whenever possible. For example, all proposed construction staging areas and yard are located in previously-disturbed areas. Design the lighting associated with above ground facilities to minimize glare and to focus lighting within a facility (e.g., using shields on lighting to reflect light downward and focused within a facility). This design concept is followed in all building design for the project. Opportunity for Agency, Tribal, and Other Stakeholder Input on the Visual Nature of Project Design (Section 2.9.3) As was done at the 60% design stage, visualizations of various design components are provided in the 90%/Supplemental 90% BOD Report to facilitate review. In addition, photos of typical construction equipment are provided in the Construction/Remedial Action Work Plan to facilitate review of the document. Potential Temporary Visual Intrusions Identified During Remedy Implementation (Section 2.9.4) During the course of remedy implementation, if agencies, Tribes, or other stakeholders identify temporary visual intrusions that should be addressed by PG&E, they should notify Curt Russell and Chris Smith, the Project Disturbance Coordinator(s), who will be responsible for resolving the issue or coordinating resolution of the issue with the Tribes, DTSC, other agencies, and/or stakeholders.	See response to EIR mitigation measures AES-1 and AES-2 in Table 6.1-1 for compliance actions. In addition to the examples implemented during the 90% stage, PG&E also provided to agencies, Tribes, and stakeholders for review and comment during the 90% RTC process, various figures/maps revised to incorporate comments, and a visualization of the revised design of the Construction Headquarters at its new location at Moabi Regional Park.
10	Section 2.10	CUL-1a-8j: Protocols for Tribal Notification in advance of Project-Related Activities Protocols for Tribal notification in advance of project-related activities that the Interested Tribes may feel have the potential to cause adverse impacts to sensitive cultural resources - PG&E will take care in these advance notifications to identify the field activities that have the potential to be ground disturbing. Examples of field activities which may include potentially ground-disturbing aspects include grading, trenching, boring, drilling, or other excavation for new injection, extraction or monitoring wells. In addition, construction of new pipelines, new treatment facilities, new access roads, new staging areas, other new transportation facilities, or other new Project components may include ground-disturbing aspects. PG&E will use communication methods specified in Section 2.10, and will provide two weeks advance notice of covered activities when possible.	PG&E has provided advance notice of ground-disturbing activities to Tribes during pre-construction phases such as the Freshwater Implementation Plan and Utility Potholing. PG&E also sends monthly emails to Tribes and Agencies that outline the field activities occurring at the Topock Compressor Station for the month. PG&E provides a two week advance notice where possible. PG&E will continue to provide advance notice to Tribes during any other ground-disturbing activities that may occur pre-construction. PG&E will also continue to follow this protocol during construction of the remedy and during operation, maintenance, and decommissioning.	PG&E has and will continue to send monthly emails to Tribes and Agencies that outline the field activities occurring at the Topock Compressor Station for the month. PG&E will provide a two week advance notice where possible. PG&E will continue to provide advance notice to Tribes during any other ground-disturbing activities that may occur prior to the start of remedy construction. PG&E will also continue to follow this protocol during construction of the remedy and during operation, maintenance, and decommissioning.

TABLE L1.1-2
Summary of Compliance with Cultural Impact Mitigation Program (CIMP) Protocols
Groundwater Remedy Basis of Design Report/Final (100%) Design
PG&E Topock Compressor Station, Needles, California

Item No.	Reference Location in CIMP Document	Protocols/Relevant Excerpts from Document	Action (Compliance Status)	
			Pre-Final (90%)/Supplemental 90% Design	Final (100%) Design
11	Section 2.11	CUL-1a-8k: Protocols to Accommodate Tribal Ceremonies or Activities involving the Topock Cultural Area Protocols to be followed by project personnel to accommodate, if feasible as determined by DTSC, key Tribal ceremonies that involve the Topock Cultural Area. Under the protocol, any Tribe(s) wishing to perform such a ceremony may contact PG&E's Site Manager at the Topock Compressor Station by telephone, email, or in writing to discuss the specific request. PG&E will communicate directly with the requester (by telephone or in person) as soon as the request has been evaluated. PG&E will indicate if all of the requests can be accommodated and, if not, suggest alternatives that PG&E can accommodate. The requestor and PG&E will also discuss the details of other services that PG&E may agree to provide for the benefit of the ceremonial activity, including, power, water, parking, signage, or other support. PG&E will also identify any reasonable and necessary stipulations regarding health and safety, logistical, communication, or site access procedures to be followed in the Topock Compressor Station Groundwater Remediation Project (Project) Area. One stipulation will clearly state that the Topock Compressor Station is excluded, and that access to it cannot be provided.	No requests to conduct Tribal ceremonies have been submitted. If ceremonies are requested during design, construction, operation and maintenance, then PG&E will follow the protocol to accommodate any requests for Tribal ceremonies.	To date, in 2015, PG&E has received one request from Tribes to conduct a Tribal ceremony. This Tribal request was accommodated by PG&E. If ceremonies are requested during construction, operation and maintenance, PG&E will follow the protocol to accommodate any requests for Tribal ceremonies.
12	Section 2.12	CUL-1a-8l: Protocols for Tribal Monitors to Observe Ground Disturbance Activities Provisions affording sufficient Tribal monitors to observe ground disturbing activities and/or other scientific surveying (e.g., biological surveys) that may occur in preparation for construction activities. Ground-disturbing activities include trenching, excavation, grading, well excavation/drilling, decommissioning the IM-3 Facility and subsurface pipeline, or other construction-related activities. Pacific Gas and Electric Company (PG&E) will notify the Interested Tribes (Tribes) as defined by the Environmental Impact Report (EIR) of planned ground-disturbing activities and other scientific surveying that is conducted in anticipation of construction activities. This provides the opportunity for Tribes to send Tribal monitors to the site to observe these activities, if they wish. While on site, Tribal monitors will have the opportunity to discuss their concerns directly with the PG&E project team while the activities are proceeding, as well as reporting their observations and any issues of concern directly to the Tribe(s) that they represent. Sufficient time (a minimum of 1 week notice) will be allowed between the notification and the beginning of the field activity that the Tribe(s) will be able to prepare adequately without undue haste and arrange for one or more monitors.	PG&E has provided notification to Tribes in advance of ground-disturbing activities during the design phase, including during the Alternative Freshwater Evaluation and Utility potholing activities. PG&E will continue to notify Tribes in accordance with the protocol throughout the remainder of the design, construction, operation and maintenance, and decommissioning.	PG&E will continue to notify Tribes in accordance with the protocol throughout remedy implementation including construction, operation and maintenance, and decommissioning.
13	Section 2.13	CUL-1a-8m: Provision of Reasonable Compensation for Tribal Monitors Provisions of reasonable compensation for Tribal monitors consistent with historical rates. PG&E will provide reasonable compensation for Tribal monitors who work on the Project. PG&E will negotiate with Tribes, taking into account the requirements of any pertinent MOUs or other legal agreements, to establish pay rates for monitors consistent with historical rates. The negotiated compensation rates will then be formalized in a separate MOU, or in amendments to an existing MOU, with each Tribe that will be supplying the services of one or more monitors.	PG&E has been operating under MOUs and has provided compensation for Tribal monitors currently and will continue to provide compensation during construction, operation and maintenance, and decommissioning phases.	PG&E has been operating under MOUs and has provided compensation for Tribal monitors currently and will continue to provide compensation during construction, operation and maintenance, and decommissioning phases.
14	Section 2.14	CUL-1a-8n: Protocols for Protective Measures for Archaeological/Historical Sites During Construction Locations requiring specific protective devices, such as temporary fencing, flagging, or other type of demarcation during construction. 2.14.1 Pre-Construction Measures to Identify Sites Requiring Protection. Pre-construction planning efforts will: (1) identify the location and boundaries of any archaeological, historical, and other cultural sites requiring protective measures during construction; and (2) establish zones within which construction may proceed. PG&E and BLM will consult with the Tribes during this process. 2.14.2 Identification of Protective Measures Prior to Construction. Avoidance will be implemented. Avoidance of known cultural sites/sensitive areas may be accomplished by using existing or approved routes of travel, and by carefully avoiding archaeological and historical sites when selecting laydown, access, and temporary work areas appurtenant to construction activities. 2.14.3 Measures to Identify New Sites Requiring Protection during Construction. PG&E's qualified archaeologist would inspect and evaluate any previously unidentified or suspected archaeological or historical resources found during construction, operation, or decommissioning. If resources are discovered, earth-disturbing activities will be temporarily suspended at the location of the find. The find will then be treated by modifying the extent of the construction zone to avoid and protect the resource(s). Thereafter, earth-moving activities may resume within the modified construction zone. Tribal notification will occur under requirements of the CHPMP and PA. 2.14.4 Implementation of Protective Measures. If warranted, protective measures may be employed on or around the archaeological or historical site to protect the resource from disturbance. These measures may include, but are not limited to, protective coverings of soil or riprap, onsite personnel to prevent access to sensitive areas, use of flagging, blaze orange mesh fencing secured to steel posts, bollards, natural barriers of rocks or piled brush, cables suspended between secure posts, and/or signage (e.g., "This Area Closed" or "Exclusion Zone: Keep Out"). Any such measures will be temporary (only as needed during construction), and will, to the extent practicable, not call undue attention to the nature of the resource being protected. Ongoing work within the established construction zone may continue. PG&E, in consultation with DTSC and BLM (if Federal and/or Tribal land is involved) and the Tribes, will determine the appropriate protective measures on a case-by- case basis, and may increase or reduce the size of the Environmentally Sensitive Area (ESA) or Exclusion Zone (EZ) if agreed to by representatives of these parties in the field. The protective measures set forth in this section will be thoroughly covered in the Worker Education Program. 2.14.5 Installation and Inspection of Protective Measures during Construction. PG&E's qualified archaeologists will monitor the installation of all protective measures and their removal after construction. Similarly, Tribal Monitors will be notified and invited to monitor the	PG&E will implement the protocols for protective measures for archaeological/historical sites during the construction of the remedy. As stated in the protocol, avoidance is the preferred protective measure and will be implemented where any identified archaeological, historical, or other cultural sites require protective measures during construction. If protective measures are used, the measures identified in Section 2.14.4 would be implemented. PG&E's archaeologist would monitor the installation and removal of all protective measures, and Tribal monitors would also be invited to monitor installation and removal. After removal, restoration would occur to pre-construction conditions.	PG&E will implement the protocols for protective measures for archaeological/historical sites during the construction of the remedy. As stated in the protocol, avoidance is the preferred protective measure and will be implemented where any identified archaeological, historical, or other cultural sites require protective measures during construction. If protective measures are used, the measures identified in Section 2.14.4 would be implemented. PG&E's archaeologist would monitor the installation and removal of all protective measures, and Tribal monitors would also be invited to monitor installation and removal. After removal, restoration would occur to pre-construction conditions.

TABLE L1.1-2
Summary of Compliance with Cultural Impact Mitigation Program (CIMP) Protocols
Groundwater Remedy Basis of Design Report/Final (100%) Design
PG&E Topock Compressor Station, Needles, California

Item No.	Reference Location in CIMP Document	Protocols/Relevant Excerpts from Document	Action (Compliance Status)	
			Pre-Final (90%)/Supplemental 90% Design	Final (100%) Design
		installation of all protective measures and their removal. PG&E construction inspectors will conduct and document systematic inspections of the integrity of protective measures during the entire period of construction activity. 2.14.6 Protection of New Sites Discovered during Construction. PG&E's qualified archaeologist will inspect and evaluate any new sites that may be discovered during construction and will notify Tribal Monitors of the discovery. Tribal Monitors will then inspect and evaluate the new site(s). Every effort will be made to avoid adverse effects on the discovered site(s) to the maximum extent practicable. Details on the initial inspection procedures are provided in Section 2.14.6. 2.14.7 Restoration After Removal of Protective Measures. After removal of protective measures (e.g., fencing, poles), the areas will be restored to pre-construction conditions. For details on documentation of pre-construction condition and post-construction condition, see Section 2.14.7.		
15	Section 2.15	CUL-1a-8o: Protocols for Reporting Discoveries of Cultural Importance Protocols for the reporting of discoveries of cultural importance consistent with existing statutes and regulations. In the event that any previously unidentified or suspected historic or archeological resource, such as human remains and/or associated funerary objects or graves, is discovered during construction, PG&E will immediately notify the DTSC, BLM, and Tribal representatives if the resource is Native American, consistent with the CHPMP and the EIR Chapter 5.1.1. Human remains, items of cultural patrimony, or funerary objects that may be found shall be handled with utmost cultural and religious sensitivity. As specified in Section 2.2.1, avoidance of cultural resources is preferred over excavation, removal, or further disturbance, particularly in discoveries involving human remains, items of cultural patrimony, or funerary objects. Where human remains and funerary objects, ceremonial items, and items of cultural patrimony are discovered, PG&E will implement the reporting protocols provided in Appendix D (Plan of Action [POA]) of the CHPMP and consistent with Mitigation Measure CUL-4 in EIR Chapter 5.1.1. During initial inspection, PG&E's qualified Cultural Resources Consultant (as specified in CUL-1a-3(a)) will document the discovery. Tribal monitors will be invited to assist in the preparation of the documentation and identification of Tribal cultural values. Discoveries identified as having cultural importance will be documented in a culturally sensitive manner acceptable to the Interested Tribe(s). PG&E will consult with the BLM, and BLM will consult with the Tribal representatives if the resource is Native American in nature, to define the nature and extent of any further studies that may be required.	PG&E will follow the protocol for reporting discoveries, in addition to complying with the CHPMP and PA.	PG&E will follow the protocol for reporting discoveries, in addition to complying with the CHPMP and PA.
16	Section 2.16	CUL-1a-8p: Protocols for Inspecting Remediation Facilities and/or Staging Areas During Construction Protocols for the inspection of remediation facilities and/or staging areas throughout the construction phase. The locations of remediation facilities and staging areas will be examined for cultural resources throughout the construction phase. This process will include advance notification of interested parties, including Interested Tribes, implementation of procedures for the review of Project design documents, selecting previously impacted land wherever feasible for re-use as staging areas and/or for the siting of remediation facilities, and avoiding direct physical impacts to the Topock Maze as it is manifested archaeologically. PG&E's qualified archaeologist, in coordination with the Tribes, will perform background research and field verification to identify and evaluate any cultural, historical, or archaeological resources within the location of remediation facilities and/or staging areas. Any resources present will be avoided to the extent feasible during construction and use of staging areas and/or remediation facilities pursuant to CUL-1b/c and CUL-2. Further, construction monitoring and treatment of any unanticipated discoveries will be as specified in CUL-1b/c-4 and CUL- 1a-8o. Accordingly, archaeological and Native American monitors will be invited to observe all earth-disturbing activities at remediation facilities and/or staging areas during construction. These monitors will at all times comply with Project-wide and job site-specific safety requirements.	PG&E has included Tribes in review of project design documents at the 30% and 60% phases, and PG&E has selected previously disturbed land for staging areas and siting of remediation facilities wherever feasible. PG&E's remedial design avoids direct impact to the Topock Maze as it is manifested archaeologically. During construction, PG&E will implement the procedures of the protocol to identify and evaluate any cultural, historical, or archaeological resources within the vicinity of staging areas and remediation facilities. Avoidance will then be implemented for any identified resources, and monitoring and treatment in the case of unanticipated discoveries. PG&E will invite Tribal monitors to observe all earth-disturbing activities.	PG&E has included Tribes in review of project design documents at the 90% phase, and PG&E has selected previously disturbed land for staging areas and siting of remediation facilities wherever feasible. PG&E's remedial design avoids direct impact to the Topock Maze as it is manifested archaeologically by avoiding it. During construction, PG&E will implement the procedures of the protocol to identify and evaluate any cultural, historical, or archaeological resources within the vicinity of staging areas and remediation facilities. Avoidance will then be implemented for any identified resources, and monitoring and treatment in the case of unanticipated discoveries. PG&E will invite Tribal monitors to observe all earth-disturbing activities.

TABLE L1.1-3
Summary of Compliance with Identified ARARs
Groundwater Remedy Basis of Design Report/Final (100%) Design
PG&E Topock Compressor Station, Needles, California

Item No.[1]	Category[1]	Citation[1,2]	Determination[1,2]	Description in DOI's ARARs Table[1,2]	Triggering Event	Compliance Responsibility	Which existing/ future document(s) will document continued compliance with this ARAR?[4]	Action (Compliance Status)			
								Preliminary (30%) Design	Intermediate (60%) Design	Pre-Final (90%)/Supplemental 90% Design	Final (100%) Design
Chemical-Specific											
1	Federal Chemical-Specific	Federal Safe Drinking Water Act - 42 USC § 300f, et seq.; 40 CFR 141 -- Subpart F– Maximum Contaminant Level Goals (MCLGs)	ARAR Relevant and Appropriate	MCLGs are not federally enforceable drinking water standards, but CERCLA § 121(d) identifies MCLGs as relevant and appropriate requirements.	Remedy Implementation	PG&E	Quarterly progress reports during remedy O&M Other data/reports requested by agencies	Compliance with this requirement will be achieved by reducing the concentration of Cr(T) in the affected aquifer to a concentration below the federal maximum contaminant level goal (MCLG) for Cr(T) of 100 µg/L. There is no federal MCLG for Cr(VI) and the RAO has been established based on the regional background concentration of 32 µg/L Cr(VI) at the conclusion of remedy implementation. Although concentrations of Cr(VI) and in-situ byproducts (e.g., arsenic, manganese) may fluctuate within the treatment area during remedy implementation, institutional controls will prevent use of affected groundwater as a drinking water source until the remedy is complete. Groundwater monitoring will be used to track performance of the remedy and verify that the RAOs have been achieved at the conclusion of remedy implementation and prior to removing the institutional control.	Compliance with this requirement will be achieved by reducing the concentration of Cr(T) in the affected aquifer to a concentration below the federal MCLG for Cr(T) of 100 µg/L. There is no federal MCLG for Cr(VI) and the RAO has been established based on the regional background concentration of 32 µg/L Cr(VI) at the conclusion of remedy implementation. Although concentrations of Cr(VI) and in-situ byproducts (e.g., arsenic, manganese) may fluctuate within the treatment area during remedy implementation, institutional controls will prevent use of affected groundwater as a drinking water source until the remedy is complete. Groundwater monitoring will be used to track performance of the remedy and verify that the RAOs have been achieved at the conclusion of remedy implementation and prior to removing the institutional control.	Compliance with this requirement will be achieved by reducing the concentration of Cr(T) in the affected aquifer to a concentration below the federal MCLG for Cr(T) of 100 µg/L. There is no federal MCLG for Cr(VI) and the RAO has been established based on the regional background concentration of 32 µg/L Cr(VI) at the conclusion of remedy implementation. Although concentrations of Cr(VI) and in-situ byproducts (e.g., arsenic, manganese) may fluctuate within the treatment area during remedy implementation, institutional controls will prevent use of affected groundwater as a drinking water source until the remedy is complete. Groundwater monitoring will be used to track performance of the remedy and verify that the RAOs have been achieved at the conclusion of remedy implementation and prior to removing the institutional control.	Compliance with this requirement will be achieved by reducing the concentration of Cr(T) in the affected aquifer to a concentration below the federal MCLG for Cr(T) of 100 µg/L. There is no federal MCLG for Cr(VI) and the RAO has been established based on the regional background concentration of 32 µg/L Cr(VI) at the conclusion of remedy implementation. Although concentrations of Cr(VI), arsenic from freshwater injection, and in-situ byproducts (e.g., arsenic, manganese) should increase or fluctuate within or immediately adjacent to the plume during remedy implementation, institutional controls will prevent use of affected groundwater as a drinking water source until the remedy is complete. At the completion of the remedy, any elevated concentrations resulting from PG&E's activities should have reverted back to values below MCLGs that are set at levels above zero, MCLs, RAOs, or background concentrations.

TABLE L1.1-3
Summary of Compliance with Identified ARARs
Groundwater Remedy Basis of Design Report/Final (100%) Design
PG&E Topock Compressor Station, Needles, California

Item No.[1]	Category[1]	Citation[1,2]	Determination[1,2]	Description in DOI's ARARs Table[1,2]	Triggering Event	Compliance Responsibility	Which existing/ future document(s) will document continued compliance with this ARAR?[4]	Action (Compliance Status)			
								Preliminary (30%) Design	Intermediate (60%) Design	Pre-Final (90%)/Supplemental 90% Design	Final (100%) Design
2	Federal Chemical-Specific	Federal Safe Drinking Water Act - 42 USC § 300g-1; 40 CFR 141 -- Subpart G – National Primary Drinking Water Regulations (MCLs)	ARAR Relevant and Appropriate	These MCLs are relevant and appropriate standards, which establish the maximum permissible level of contaminants (e.g., chromium) in sources (or potential sources) of drinking water. MCLs may be applicable where water at a CERCLA site is delivered through a public water supply system.	Remedy Implementation	PG&E	Quarterly progress reports during remedy O&M Other data/reports requested by agencies	Compliance with this requirement will be achieved by reducing the concentration of Cr(T) in the affected aquifer below the federal maximum contaminant level (MCL) for Cr(T) of 100 µg/L. There is no federal MCL for Cr(VI) and the RAO has been established based on the regional background concentration of 32 µg/L at the conclusion of remedy implementation. Although concentrations of Cr(VI) and in-situ by-products (e.g., arsenic, manganese) may fluctuate within the treatment area during remedy implementation, institutional controls will prevent use of affected groundwater as a drinking water source until the remedy is complete. Groundwater monitoring will be used to track performance of the remedy and verify that RAOs have been achieved at the conclusion of remedy implementation and prior to removing the institutional controls.	Compliance with this requirement will be achieved by reducing the concentration of Cr(T) in the affected aquifer below the federal MCL for Cr(T) of 100 µg/L. There is no federal MCL for Cr(VI) and the RAO has been established based on the regional background concentration of 32 µg/L at the conclusion of remedy implementation. Concentrations of Cr(VI) and in-situ by-products (e.g., arsenic, manganese) may fluctuate within the treatment area during remedy implementation. In addition, as part of the remedy fresh water from a well in Arizona will be injected west of the plume, within the project's Area of Potential Effects. The naturally occurring arsenic concentration in water from the well exceeds the MCL of 10 µg/L, which is typical of water quality in the vicinity of Topock, Arizona**,** and will be removed to below MCL prior to injection**.** Modeling indicates that arsenic concentrations that may temporarily be elevated by the generation from in-situ remediation are localized, will attenuate under site conditions and will return to pre-remedy baseline levels after the end of active remediation. Institutional controls will prevent use of affected groundwater as a drinking water source until the remedy is complete. Groundwater monitoring will be used to track performance of the remedy and verify that RAOs have been achieved at the conclusion of remedy implementation and prior to removing the institutional controls.	Compliance with this requirement will be achieved by reducing the concentration of Cr(T) in the affected aquifer below the federal MCL for Cr(T) of 100 µg/L. There is no federal MCL for Cr(VI) and the RAO has been established based on the regional background concentration of 32 µg/L at the conclusion of remedy implementation. Concentrations of Cr(VI) and in-situ by-products (e.g., arsenic, manganese) may fluctuate within the treatment area during remedy implementation. In addition, as part of the remedy fresh water from a well in Arizona will be injected west of the plume, within the project's Area of Potential Effects. The naturally occurring arsenic concentration in water from the well exceeds the MCL of 10 µg/L, which is typical of water quality in the vicinity of Topock, Arizona**.** Modeling indicates that arsenic concentrations that may temporarily be elevated by the generation from in-situ remediation and freshwater injection are localized, will attenuate under site conditions and will return to pre-remedy baseline levels after the end of active remediation and the cessation of freshwater injection, respectively. Institutional controls will prevent use of affected groundwater as a drinking water source until the remedy is complete. Groundwater monitoring will be used to track performance of the remedy and verify that RAOs	Compliance with this requirement will be achieved by reducing the concentration of Cr(T) in the affected aquifer below the federal MCL for Cr(T) of 100 µg/L. There is no federal MCL for Cr(VI) and the RAO has been established based on the regional background concentration of 32 µg/L at the conclusion of remedy implementation. Concentrations of Cr(VI) and in-situ by-products (e.g., arsenic, manganese) may fluctuate within the treatment area during remedy implementation. In addition, as part of the remedy fresh water from a well in Arizona will be injected west of the plume, within the project's Area of Potential Effects. The naturally occurring arsenic concentration in water from the well exceeds the MCL of 10 µg/L, which is typical of water quality in the vicinity of Topock, Arizona**.** Modeling indicates that elevated arsenic concentrations generated from in-situ remediation and freshwater injection are localized, will attenuate under site conditions, and will return to pre-remedy baseline levels approximately 10 years after the end of active remediation and the cessation of freshwater injection, respectively. Institutional controls will prevent use of affected groundwater as a drinking water source until the remedy is complete. Groundwater monitoring will be used to track performance of the remedy and verify that RAOs have been achieved at the

TABLE L1.1-3
Summary of Compliance with Identified ARARs
Groundwater Remedy Basis of Design Report/Final (100%) Design
PG&E Topock Compressor Station, Needles, California

Item No.[1]	Category[1]	Citation[1,2]	Determination[1,2]	Description in DOI's ARARs Table[1,2]	Triggering Event	Compliance Responsibility	Which existing/ future document(s) will document continued compliance with this ARAR?[4]	Action (Compliance Status)			
								Preliminary (30%) Design	Intermediate (60%) Design	Pre-Final (90%)/Supplemental 90% Design	Final (100%) Design
										have been achieved at the conclusion of remedy implementation and prior to removing the institutional controls.	conclusion of remedy implementation and prior to removing the institutional controls.
3	Federal Chemical-Specific	Federal Water Pollution Control Act (Clean Water Act) - 33 USC §§ 1251-1387; 40 CFR 131.38	ARAR Applicable	These are federally promulgated Water Quality Standards for surface waters. Such water quality standards include specific criteria for water bodies in California, including standards for hexavalent chromium.	Remedy Implementation	PG&E	Quarterly progress reports during remedy O&M Other data/reports requested by agencies	Surface water sampling in the Colorado River near the site shows concentrations less than the federal water quality criteria (California Toxics Rule) for Cr(VI) of 11 µg/L. Reducing Cr(VI) concentrations in groundwater by implementation of the remedy will increase the level of certainty that surface water quality will continue to remain below this level. The remedy is designed to prevent migration of contaminants to the Colorado River that would result in an exceedance of California Toxics Rule criteria.	Surface water sampling in the Colorado River near the site shows concentrations less than the federal water quality criteria (California Toxics Rule) for Cr(VI) of 11 µg/L. Reducing Cr(VI) concentrations in groundwater by implementation of the remedy will prevent any and all discharges to the Colorado River from the groundwater contamination. The remedy is designed to prevent migration of contaminants to the Colorado River that would result in an exceedance of applicable water quality standards.	Surface water sampling in the Colorado River near the site shows concentrations less than the federal water quality criteria (California Toxics Rule) for Cr(VI) of 11 µg/L. Reducing Cr(VI) concentrations in groundwater by implementation of the remedy will prevent any and all discharges to the Colorado River from the groundwater contamination. The remedy is designed to prevent migration of contaminants to the Colorado River that would result in an exceedance of applicable water quality standards, including federal, California, and Arizona standards.	Surface water sampling in the Colorado River near the site shows concentrations less than the federal water quality criteria (California Toxics Rule) for Cr(VI) of 11 µg/L. Reducing Cr(VI) concentrations in groundwater by implementation of the remedy will prevent any and all discharges to the Colorado River from the groundwater contamination. The remedy is designed to prevent migration of contaminants to the Colorado River that would result in an exceedance of applicable water quality standards, including federal, California, and Arizona standards.

TABLE L1.1-3
Summary of Compliance with Identified ARARs
Groundwater Remedy Basis of Design Report/Final (100%) Design
PG&E Topock Compressor Station, Needles, California

Item No.[1]	Category[1]	Citation[1,2]	Determination[1,2]	Description in DOI's ARARs Table[1,2]	Triggering Event	Compliance Responsibility	Which existing/ future document(s) will document continued compliance with this ARAR?[4]	Action (Compliance Status)			
								Preliminary (30%) Design	Intermediate (60%) Design	Pre-Final (90%)/Supplemental 90% Design	Final (100%) Design
52	California Chemical-Specific	California Safe Drinking Water Act - Title 22, CCR, Div 4, Ch 15, §64431, §64444	ARAR Applicable	Maximum Contaminant Levels (MCLs) which shall not be exceeded in the water supplied to the public. California state MCLs for drinking water standards are more stringent than primary federal standards.	Remedy Implementation	PG&E	Quarterly progress reports during remedy O&M Other data/reports requested by agencies	Compliance with this requirement will be achieved by reducing the concentration of Cr(T) in the affected aquifer to a concentration below the state MCL for Cr(T) of 50 µg/L. There is no state MCL for Cr(VI) and the RAO has been established based on the regional background concentration of 32 µg/L at the conclusion of remedy implementation. Although concentrations of Cr(VI) and in-situ byproducts (e.g., arsenic, manganese) may fluctuate during remedy implementation, institutional controls will prevent use of affected groundwater as a drinking water source until the remedy is complete. Groundwater monitoring will be used to track performance of the remedy and verify that the RAOs have been achieved at the conclusion of remedy implementation and prior to removing the institutional control.	Compliance with this requirement will be achieved by reducing the concentration of Cr(T) in the affected aquifer to a concentration below the state MCL for Cr(T) of 50 µg/L. There is no state MCL for Cr(VI) and the RAO has been established based on the regional background concentration of 32 µg/L at the conclusion of remedy implementation. Concentrations of Cr(VI) and in-situ byproducts (e.g., arsenic, manganese) may fluctuate during remedy implementation. In addition, as part of the remedy fresh water from a well in Arizona will be injected west of the plume, within the project's Area of Potential Effects. The naturally occurring arsenic concentration in water from the well exceeds the MCL of 10 µg/L, which is typical of water quality in the vicinity of Topock, Arizona**,** and will be removed to below MCL prior to injection**.** Modeling indicates that arsenic concentrations that may temporarily be elevated by the generation from in-situ remediation are localized, will attenuate under site conditions and will return to pre-remedy baseline levels after the end of active remediation. Institutional controls will prevent use of affected groundwater as a drinking water source until the remedy is complete. Groundwater monitoring will be used to track performance of the remedy and verify that the RAOs have been achieved at the conclusion of remedy implementation and prior to removing the institutional control.	Compliance with this requirement will be achieved by reducing the concentration of Cr(T) in the affected aquifer to a concentration below the state MCL for Cr(T) of 50 µg/L. The state MCL for Cr(VI) is 10 µg/L. The RAO has been established based on the regional background concentration of 32 µg/L at the conclusion of remedy implementation. Concentrations of Cr(VI) and in-situ byproducts (e.g., arsenic, manganese) may fluctuate during remedy implementation. In addition, as part of the remedy fresh water from a well in Arizona will be injected west of the plume, within the project's Area of Potential Effects. The naturally occurring arsenic concentration in water from the well exceeds the MCL of 10 µg/L, which is typical of water quality in the vicinity of Topock, Arizona. Modeling indicates that arsenic concentrations that may temporarily be elevated by the generation from in-situ remediation and freshwater injection are localized, will attenuate under site conditions and will return to pre-remedy baseline levels after the end of active remediation and the cessation of freshwater injection, respectively. Institutional controls will prevent use of affected groundwater as a drinking water source until the remedy is complete. Groundwater monitoring will be used to track performance of the remedy and verify that the RAOs have been achieved at	Compliance with this requirement will be achieved by reducing the concentration of Cr(T) in the affected aquifer to a concentration below the state MCL for Cr(T) of 50 µg/L. The state MCL for Cr(VI) is 10 µg/L, but the RAO has been established based on the Alluvial Aquifer regional background concentration of 32 µg/L at the conclusion of remedy implementation. Concentrations of Cr(VI) and in-situ byproducts (e.g., arsenic, manganese) may fluctuate during remedy implementation. In addition, as part of the remedy fresh water from a well in Arizona will be injected west of the plume, within the project's Area of Potential Effects. The naturally occurring arsenic concentration in water from the well exceeds the MCL of 10 µg/L, which is typical of water quality in the vicinity of Topock, Arizona. Modeling indicates that elevated arsenic concentrations generated from in-situ remediation and freshwater injection are localized, will attenuate under site conditions and will return to pre-remedy baseline levels approximately 10 years after the end of active remediation and the cessation of freshwater injection, respectively. Institutional controls will prevent use of affected groundwater as a drinking water source until the remedy is complete. Groundwater monitoring will be used to track performance of the remedy and verify that the RAOs have been achieved at the conclusion of remedy

TABLE L1.1-3
Summary of Compliance with Identified ARARs
Groundwater Remedy Basis of Design Report/Final (100%) Design
PG&E Topock Compressor Station, Needles, California

Item No.[1]	Category[1]	Citation[1,2]	Determination[1,2]	Description in DOI's ARARs Table[1,2]	Triggering Event	Compliance Responsibility	Which existing/ future document(s) will document continued compliance with this ARAR?[4]	Action (Compliance Status)			
								Preliminary (30%) Design	Intermediate (60%) Design	Pre-Final (90%)/Supplemental 90% Design	Final (100%) Design
										the conclusion of remedy implementation and prior to removing the institutional control.	implementation and prior to removing the institutional control.
53	California Chemical-Specific	Secondary MCLs list for drinking water - Title 22, CCR, Div 4, Ch 15, §64449	ARAR Relevant and Appropriate	State secondary MCLs for drinking water standards are more stringent than federal standards. These secondary MCLs are relevant and appropriate standards, which establish the maximum permissible level of contaminants in sources (or potential sources) of drinking water. These secondary MCLs would be applicable if water at the site was used as drinking water and delivered through a community water supply system.	Remedy Implementation	PG&E	Quarterly progress reports during remedy O&M Other data/reports requested by agencies	There is no secondary MCL for Cr(VI) or Cr(T). Secondary MCLs are community acceptance standards for constituents that may adversely affect the taste, odor or appearance of drinking water. An institutional control will be enforced throughout the chromium plume area during implementation of the remedial action to prohibit use of the groundwater as a drinking water source.	There is no secondary MCL for Cr(VI) or Cr(T). Secondary MCLs are community acceptance standards for constituents that may adversely affect the taste, odor or appearance of drinking water. Concentrations of in-situ by-products (arsenic, manganese [secondary MCL of 50 µg/L]) may fluctuate within the treatment area during remedy implementation. Institutional control will be enforced throughout the chromium plume area during implementation of the remedial action to prohibit use of the groundwater as a drinking water source. Additionally, there are currently no municipal or private wells in the chromium plume area, to PG&E's knowledge.	There is no secondary MCL for Cr(VI) or Cr(T). Secondary MCLs are community acceptance standards for constituents that may adversely affect the taste, odor or appearance of drinking water. Concentrations of in-situ by-products (arsenic, manganese [secondary MCL of 50 µg/L]) may fluctuate within the treatment area during remedy implementation. Institutional control will be enforced throughout the chromium plume area during implementation of the remedial action to prohibit use of the groundwater as a drinking water source. Additionally, there are currently no municipal or private wells in the chromium plume area, to PG&E's knowledge.	There is no secondary MCL for Cr(VI) or Cr(T). Secondary MCLs are community acceptance standards for constituents that may adversely affect the taste, odor or appearance of drinking water. Concentrations of in-situ by-products (arsenic, manganese [secondary MCL of 50 µg/L]) may fluctuate within the treatment area during remedy implementation. Institutional controls will be enforced throughout the chromium plume area during implementation of the remedial action to prohibit use of the groundwater as a drinking water source. Additionally, there are currently no municipal or private wells in the chromium plume area, to PG&E's knowledge.
55	California Chemical-Specific	Groundwater and vadose zone protection standards - Title 22, CCR, Div 4.5, Ch 15, Article 6, §66265.94	ARAR Applicable	RCRA hazardous waste Interim Status TSD facilities shall comply and ensure that hazardous constituents entering the groundwater, surface water, and soil from a regulated unit do not exceed the concentration limit from contaminants of concern in the uppermost aquifer underlying the waste management area beyond the point of compliance.	Remedy Implementation	PG&E	N/A. No further action required unless post-design approval change triggers.	Compliance with this requirement will be achieved by reducing the concentration of Cr(VI) in the affected aquifer to the regional background concentration of 32 µg/L at the conclusion of remedy implementation. Although concentrations of Cr(VI) and in-situ byproducts (e.g., arsenic, manganese) may fluctuate during remedy implementation, institutional controls will prevent use of affected groundwater until the remedy is complete. Groundwater monitoring will be used to track performance of the remedy and verify that the RAOs have been achieved at the conclusion of remedy implementation.	Compliance with this requirement will be achieved by reducing the concentration of Cr(VI) in the affected aquifer to the regional background concentration of 32 µg/L at the conclusion of remedy implementation. Although concentrations of Cr(VI) and in-situ byproducts (e.g., arsenic, manganese) may fluctuate during remedy implementation, institutional controls will prevent use of affected groundwater until the remedy is complete. Groundwater monitoring will be used to track performance of the remedy and verify that the RAOs have been achieved at the conclusion of remedy implementation.	Compliance with this requirement will be achieved by reducing the concentration of Cr(VI) in the affected aquifer to the regional background concentration of 32 µg/L at the conclusion of remedy implementation. Although concentrations of Cr(VI) and in-situ byproducts (e.g., arsenic, manganese) may fluctuate during remedy implementation, institutional controls will prevent use of affected groundwater until the remedy is complete. Groundwater monitoring will be used to track performance of the remedy and verify that the RAOs have been achieved at the conclusion of remedy implementation.	DOI has determined that the specific regulations under this ARAR do not currently apply to the RCRA corrective action that is being conducted at the site (see RTC #391). Therefore, no further action is required.

TABLE L1.1-3
Summary of Compliance with Identified ARARs
Groundwater Remedy Basis of Design Report/Final (100%) Design
PG&E Topock Compressor Station, Needles, California

Item No.[1]	Category[1]	Citation[1,2]	Determination[1,2]	Description in DOI's ARARs Table[1,2]	Triggering Event	Compliance Responsibility	Which existing/ future document(s) will document continued compliance with this ARAR?[4]	Action (Compliance Status)			
								Preliminary (30%) Design	Intermediate (60%) Design	Pre-Final (90%)/Supplemental 90% Design	Final (100%) Design
Action-Specific											
31	Federal Action-Specific	Federal Safe Drinking Water Act - 42 USC §300f, et seq. Part C – Protection of Underground Sources of Drinking Water; 40 CFR 144-148	ARAR Applicable	These Underground Injection Control Regulations assure that any underground injection performed on-site will not endanger drinking water sources. Substantive requirements include, but are not limited to, regulation of well construction and well operation. These requirements will be applicable if underground injection is proposed as a part of a site remedy.	Underground injection activities	PG&E	Filing of inventory of injection wells	Injection wells are classified as Class V injection wells and will be registered with USEPA prior to installation. The injection wells will be monitored to ensure they will not endanger drinking water sources. An institutional control will be enforced throughout the chromium plume area during implementation of the remedial action to prohibit use of the groundwater as a drinking water source. All injection wells will be properly closed upon completion of the remedy.	Injection wells are classified as Class V injection wells and will be registered with USEPA prior to installation. The injection wells will be monitored to ensure they will not endanger drinking water sources. An institutional control will be enforced throughout the chromium plume area during implementation of the remedial action to prohibit use of the groundwater as a drinking water source. All injection wells will be properly closed upon completion of the remedy.	Injection wells are classified as Class V injection wells and will be registered with USEPA prior to installation. An institutional control will be enforced throughout the chromium plume area during implementation of the remedial action to prohibit use of the groundwater as a drinking water source. All injection wells will be properly closed upon completion of the remedy.	Injection wells are classified as Class V injection wells and will be registered with USEPA prior to installation. An institutional control will be enforced throughout the chromium plume area during implementation of the remedial action to prohibit use of the groundwater as a drinking water source. All injection wells will be properly closed upon completion of the remedy.
32	Federal Action-Specific	Federal Water Pollution Control Act (Clean Water Act) - 33 USC § 1344 ; 40 CFR 230.10	ARAR Applicable	This section of the Clean Water Act prohibits certain activities with respect to on-site wetlands and waterways. No discharge of dredged or fill material shall be permitted if there is a practicable alternative to the proposed activity which would have less adverse impact to the aquatic ecosystem.	Activities that occur in the Colorado River or in jurisdictional waters of the United States that result in discharge of dredged or fill material.	PG&E	N/A. No further action required unless post-design approval change triggers.	The preliminary (30%) design includes facilities in the jurisdictional water of the U.S. (see Figure 2-16 of the 30% BOD Report). PG&E will work with the USACE to ensure compliance with the substantive requirements of Section 404 per CERCLA Section 121(e)(1). It is anticipated that a wetland delineation will be conducted in the Spring of 2012.	The intermediate (60%) design includes facilities in the jurisdictional waters of the U.S. (see Figure 2.4-5 in the 60% BOD Report document). PG&E will work with the USACE to ensure compliance with the substantive requirements of Section 404 per CERCLA Section 121(e)(1). A wetlands delineation was completed in March 2012 and is to be revised in April 2013; results will be summarized in a forthcoming report for DTSC review.	A report titled "*Wetlands and Waters of the United States Final Delineation Report for the Topock Compressor Station Groundwater Remediation Project, San Bernardino County, California"* (CH2M HILL 2014c) was prepared to summarize results of efforts to delineate jurisdictional areas in the project area, and was submitted to DTSC and DOI on April 18, 2014. The report is also included in Appendix A3 of the 90% BOD Report. In support of the Supplemental 90% design, PG&E conducted surveys for jurisdictional waters and wetlands in the 6.74-acre and soil management area at Moabi Regional Park on November 19, 2014. The survey results were summarized in a technical memorandum titled *Assessment of Biological Resources for the Proposed Soil Management Areas* (CH2M HILL 2015b), which was submitted with the Supplemental 90%. On July 10, 2013, the USACE confirmed that CERCLA 121(e)(1) permit exemption	On January 30, 2015, PG&E conducted biological surveys (including mature plants and culturally significant plants) of the area proposed for remedy use at Moabi Regional Park. On June 24-25, 2015, in conformance with direction from DTSC, PG&E conducted biological surveys (including mature plants and culturally significant plants) of an additional 35-acre area on the west side of Moabi Regional Park. The survey results were summarized in a technical memorandum titled *Assessment of Biological Resources for a 35-acre Area on the West Side of Moabi Regional Park* (CH2M HILL 2015d). This memorandum provides updates to the January 2015 memorandum as well as information on the natural resources observed within the larger 35-acre area, and is also included in Appendix A10 of this report. In addition, a technical memorandum titled *Assessment of Biological Resources for the Proposed Sewer and Firewater Lines for*

TABLE L1.1-3
Summary of Compliance with Identified ARARs
Groundwater Remedy Basis of Design Report/Final (100%) Design
PG&E Topock Compressor Station, Needles, California

Item No.[1]	Category[1]	Citation[1,2]	Determination[1,2]	Description in DOI's ARARs Table[1,2]	Triggering Event	Compliance Responsibility	Which existing/ future document(s) will document continued compliance with this ARAR?[4]	Action (Compliance Status)			
								Preliminary (30%) Design	Intermediate (60%) Design	Pre-Final (90%)/Supplemental 90% Design	Final (100%) Design
										applies to the Topock remediation project, and therefore, PG&E is not required to comply with the administrative and procedural elements of Section 404 of the Clean Water Act, however PG&E is obligated to comply with the substantive elements of Section 404 of the Clean Water Act. The locations of jurisdictional wetlands and waters have been incorporated into the design. At the 90%/ Supplemental 90% design stage, the final remedy avoids almost all permanent impacts within USACE jurisdictional areas with the following exceptions. There is one planned well, IRL-4, that will occur within a jurisdictional waters of the US. There is also a freshwater pipeline that will be installed within an existing unpaved access road within the 100-year floodplain of the Colorado River. In addition, piping and conduits will be installed in two locations in Bat Cave Wash – one location in the Upland Area and one location near the TCS. However, complete avoidance of other jurisdictional non-wetland waters is not feasible. It has been determined that in order to meet the goals of protection of human health and the environment, to meet the RAOs for the remedy, to monitor remedy performance, to gather data for demonstration of compliance, as well as in response to resolution of design comments with the Tribes, infrastructure (remediation, monitoring wells, and associated piping/conduits) must be	*the Construction Headquarters, Final Groundwater Remedy, Topock Compressor Station, California* (CH2M HILL 2015c) was prepared to provide a general assessment of biological resources that could be affected by the proposed sewer and fire water lines that may be installed in the future and are associated with the construction headquarters facilities that would be located to the west of Moabi Regional Park, south of the National Trails Highway. The memo was completed on August 5, 2015 and submitted for review during the 90% RTC process and is included in Appendix A10 of this report. The locations of jurisdictional waters have been considered in the design. At the final design stage, the final remedy avoids almost all permanent impacts within USACE jurisdictional areas with the following exceptions: 1) Inner Recirculation Loop well IRL-4 will occur within a jurisdictional water of the U.S. 2) Remedy and monitoring wells and associated piping/conduits will be installed in Bat Cave Wash, a jurisdictional water of the U.S. 3) Freshwater supply well HNWR-1A, contingent Site B well, associated equipment, and a portion of the freshwater pipeline will be installed within the 100-year floodplain of the Colorado River. 4) Riverbank Extraction Well RB-5, monitoring well MW-W, a portion of Pipeline C,

TABLE L1.1-3
Summary of Compliance with Identified ARARs
Groundwater Remedy Basis of Design Report/Final (100%) Design
PG&E Topock Compressor Station, Needles, California

Item No.[1]	Category[1]	Citation[1,2]	Determination[1,2]	Description in DOI's ARARs Table[1,2]	Triggering Event	Compliance Responsibility	Which existing/ future document(s) will document continued compliance with this ARAR?[4]	Action (Compliance Status)			
								Preliminary (30%) Design	Intermediate (60%) Design	Pre-Final (90%)/Supplemental 90% Design	Final (100%) Design
										installed in certain washes. There are no practicable alternatives to locating certain infrastructure within waters of the United States. Figure 2.4-5 in the 90% BOD Report shows the unavoidable overlaps between planned remedy infrastructure and the USACE jurisdictional waters. In such cases where complete avoidance is not feasible, certain best management practices (BMPs) will be implemented to avoid and minimize temporary and permanent impacts for activities occurring within jurisdictional wetlands (if any) and non-wetland waters of the U.S. Although the USACE did not provide a list of measures that may be taken to reduce impacts to jurisdictional waters and wetlands, the California Department of Fish and Wildlife (CDFW) requires compliance with avoidance and mitigation measures (AMMs) for all work conducted in CDFW jurisdictional washes. The geographic extent of CDFW's jurisdiction is broader than the jurisdictional extent of the USACE under CWA 404 and thus, avoidance and mitigation measures applied to CDFW jurisdictional waters would as a geographic consequence also be applied to CWA 404 waters. While Arizona does not have a similar state program, PG&E will also implement the same AMMs in Arizona identified by CDFW for California as well to ensure appropriate protection to CWA 404 jurisdictional areas in the project area, including those in Arizona.	and a portion of the ring road will be installed within the 100-year floodplain of the Colorado River. Complete avoidance of jurisdictional areas is not feasible. It has been determined that in order to meet the goals of protection of human health and the environment, to meet the RAOs for the remedy, to monitor remedy performance, to gather data for demonstration of compliance, as well as in response to resolution of design comments with the Tribes, infrastructure (remediation, monitoring wells, and associated piping/conduits) must be installed in certain washes. There are no practicable alternatives to locating certain infrastructure within the waters of the United States. Figure 2.4-5 in this Final BOD Report shows the unavoidable overlaps between planned remedy infrastructure and the USACE jurisdictional waters. In such cases where complete avoidance is not feasible, BMPs will be implemented to avoid and minimize temporary and permanent impacts for activities occurring within jurisdictional wetlands and non-wetland waters of the U.S. (for brevity, the detailed discussion on BMPs in the previous column is not repeated here).

TABLE L1.1-3
Summary of Compliance with Identified ARARs
Groundwater Remedy Basis of Design Report/Final (100%) Design
PG&E Topock Compressor Station, Needles, California

Item No.[1]	Category[1]	Citation[1,2]	Determination[1,2]	Description in DOI's ARARs Table[1,2]	Triggering Event	Compliance Responsibility	Which existing/ future document(s) will document continued compliance with this ARAR?[4]	Action (Compliance Status)			
								Preliminary (30%) Design	Intermediate (60%) Design	Pre-Final (90%)/Supplemental 90% Design	Final (100%) Design
										In addition to the CDFW AMMs, PG&E has identified additional BMPs for implementation during remedy construction, operation and maintenance, as well as decommissioning. The additional BMPs are described in the *Protocol for Compliance with EIR Mitigation and Monitoring Reporting Program BIO-1 and Applicable or Relevant and Appropriate Requirement (ARAR) #32 at the Topock Compressor Station* (see Exhibit 6.1-1 at the end of Table 6.1-1). A Habitat Restoration Plan for Riparian Vegetation and Other Sensitive Habitats (CH2M HILL 2014o) was also prepared and submitted as an appendix of the Construction/Remedial Action Work Plan.	
33	Federal Action-Specific	Federal Water Pollution Control Act (Clean Water Act) - 33 USC § 1342; 40 CFR 122; 40 CFR 125	ARAR Applicable	These National Pollutant Discharge Elimination System (NPDES) requirements regulate discharges of pollutants from any point source into waters of the United States.	Point source discharges to waters of the US.	PG&E	N/A. No further action required unless post-design approval change triggers.	No further action required. The remedy as presented in the preliminary (30%) design does not result in point source discharges to waters of the United States that will require an NPDES permit.	No further action required. The remedy as presented in the 60% design does not result in point source discharges to waters of the United States that will require an NPDES permit.	No further action required. The remedy as presented in the 90% design does not result in point source discharges to waters of the United States that will require an NPDES permit.	No further action required. The remedy as presented in the final design does not result in point source discharges to waters of the United States that will require an NPDES permit.
34	Federal Action-Specific	Federal Water Pollution Control Act (Clean Water Act) -40 CFR 122.26	ARAR Applicable	These regulations define the necessary requirements with respect to the discharge of storm water under the NPDES program. These regulations will apply if proposed remedial actions result in storm water runoff which comes in contact with any construction activity from the site remediation.	Ground disturbance as a result of construction is > 1 acre	PG&E	SWPPP, BMP Plans and Monitoring & Reporting, Construction/ Remedial Action Work Plan, Plan for Decommissioning and Removal of IM-3 and Site Restoration, Decommissioning Plan for Remedy Facilities and Restoration	PG&E will prepare a BMP Plan prior to construction activities that will be included in the Construction/Remedial Action Work Plan.	PG&E will prepare a BMP Plan to address construction activities which will be included in the Construction/Remedial Action Work Plan and the IM-3 Decommissioning Work Plan that will be submitted as part of the 90% design. In addition, PG&E will prepare an industrial or O&M SWPPP that will include a storm water monitoring program in compliance with the General Permit. The outline for the O&M SWPPP is included in Appendix E of the O&M Plan (Volume 1) at the 60% design stage; the complete industrial SWPPP will be provided at the 90% design stage.	A BMP Plan for construction activities was prepared and is included as an appendix in the Construction/Remedial Action Work Plan and the IM-3 Decommissioning Work Plan. In addition, an industrial SWPPP was also prepared and included in Appendix E of the O&M Plan (Volume 1). The SWPPP includes BMPs for O&M activities and a storm water monitoring program in compliance with the General Permit.	A BMP Plan for construction activities was prepared and is included as an appendix in the Construction/Remedial Action Work Plan and the IM-3 Decommissioning Work Plan. In addition, an industrial SWPPP was also prepared and included in Appendix E of the O&M Plan (Volume 1). The SWPPP includes BMPs for O&M activities and a storm water monitoring program in compliance with the General Permit.

TABLE L1.1-3
Summary of Compliance with Identified ARARs
Groundwater Remedy Basis of Design Report/Final (100%) Design
PG&E Topock Compressor Station, Needles, California

Item No.[1]	Category[1]	Citation[1,2]	Determination[1,2]	Description in DOI's ARARs Table[1,2]	Triggering Event	Compliance Responsibility	Which existing/ future document(s) will document continued compliance with this ARAR?[4]	Action (Compliance Status)			
								Preliminary (30%) Design	Intermediate (60%) Design	Pre-Final (90%)/Supplemental 90% Design	Final (100%) Design
35	Federal Action-Specific	River and Harbor Act of 1899 - 33 USC §§ 401 and 403	ARAR Applicable	This Act prohibits the creation of any obstruction in navigable waters, in addition to banning activities such as depositing refuse, excavating, filling, or in any manner altering the course, condition, or capacity of navigable waters. These requirements will apply if proposed activities at the Topock site have the potential of affecting any navigable waters on the site.	Activities with the potential to affect any navigable waters on the site	PG&E	N/A. No further action required unless post-design change approval triggers.	No further action required. The remedy, as presented in the preliminary (30%) design, will not affect navigable waters.	No further action required. The remedy, as presented in the 60% design, will not affect navigable waters.	No further action required. The remedy, as presented in the 90% design, will not affect navigable waters.	No further action required. The remedy, as presented in the final design, will not affect navigable waters.
38	Federal Action-Specific	Clean Air Act - USC §§ 7401, et seq. (National Emission Standards for Hazardous Air Pollutants (NESHAP)); 40 CFR 61; 40 CFR 63	ARAR Applicable	NESHAPs are regulations which establish emissions standards for certain hazardous air pollutants (HAPs) identified in the regulations. NESHAPs will apply if remediation activities on the site produce identified HAP emissions.	Activities produce identified HAP emissions	PG&E	N/A. No further action required unless post-design approval change triggers.	No further action required. The remedy, as presented in the preliminary (30%) design does not include activities subject to NESHAPs.	No further action required. The remedy, as presented in the 60% design does not include activities subject to NESHAPs.	No further action required. The remedy, as presented in the 90% design does not include activities subject to NESHAPs.	No further action required. The remedy, as presented in the final design does not include activities subject to NESHAPs.

TABLE L1.1-3
Summary of Compliance with Identified ARARs
Groundwater Remedy Basis of Design Report/Final (100%) Design
PG&E Topock Compressor Station, Needles, California

Item No.[1]	Category[1]	Citation[1,2]	Determination[1,2]	Description in DOI's ARARs Table[1,2]	Triggering Event	Compliance Responsibility	Which existing/ future document(s) will document continued compliance with this ARAR?[4]	Action (Compliance Status)			
								Preliminary (30%) Design	Intermediate (60%) Design	Pre-Final (90%)/Supplemental 90% Design	Final (100%) Design
39	Federal Action-Specific	Religious Freedom Restoration Act - 42 USC § 2000bb	ARAR Applicable	Pursuant to this Act, the government shall not substantially burden a person's exercise of religion, unless the application of the burden is in furtherance of a compelling government interest, and it is the least restrictive means of furthering that interest. To constitute a "substantial burden" on the exercise of religion, a government action must (1) force individuals to choose between following the tenets of their religion and receiving a governmental benefit or (2) coerce individuals to act contrary to their religious beliefs by the threat of civil or criminal sanctions. If any remedial action selected imposes a substantial burden on a person's exercise of religion, it must be in furtherance of a compelling government interest and be the least restrictive means of achieving that interest.	Activities with the potential to impose a substantial burden on a person's exercise of religion.	DOI/BLM	Design submittals, Construction/ Remedial Action Work Plan, O&M Plan, Progress Reports, Decommissioning Plan	The remedy, as presented in the preliminary (30%) design does not substantially burden a person's exercise of religion. Additionally, in compliance with the PA, a Tribal Access Plan is being developed for Tribal access to areas within the Topock site for traditional religious, cultural, or spiritual purposes during implementation of the Remedy. BLM is also developing a *Cultural and Historic Properties Management Plan* (CHPMP) to avoid, minimize and mitigate potential affects to historic properties, including the Topock TCP during implementation of the Remedy. BLM distributed a draft CHPMP on November 1, 2011. Comments on the draft CHPMP are due December 5, 2011. The BLM is anticipating that the final CHPMP will be issued by January 20, 2012 The preliminary (30%) design was submitted on November 18, 2011. PG&E will prepare future design submittals, a Construction/Remedial Action Work Plan, a Plan for decommissioning, removal, and restoration of IM-3 facility, and a Decommissioning Plan for Remedy Facilities and Restoration. The other documents will be prepared and submitted.	The remedy, as presented in the intermediate (60%) design, does not substantially burden a person's exercise of religion. Additionally, in compliance with the PA, a Tribal Access Plan (BLM 2011) was completed for Tribal access to lands under federal management within the Topock site for traditional religious, cultural, or spiritual purposes during implementation of the Remedy. PG&E has initiated work on an Access Plan for the lands not under federal management, taking into consideration the information in the BLM Access Plan, for submittal with the final design (target 2013). BLM also developed the CHPMP to avoid, minimize and mitigate potential affects to historic properties, including the Topock TCP, during implementation of the Remedy. BLM issued the final CHPMP on January 20, 2012. The CHPMP can be modified and updated, as needed, to address new information and ongoing activities related to the project. Therefore, subsequently to the issuance of the CHPMP, BLM continues to hold periodic working meetings on the CHPMP. It should be noted that treatment measures are included in the CHPMP and a treatment plan will continue to be developed throughout the design to address mitigation measures. The intermediate (60%) design was submitted on April 5, 2013. PG&E will prepare and submit future design submittals; a Construction/Remedial Action Work Plan; a plan for decommissioning, removal, and restoration of the IM-3 facility; and a Decommissioning Plan for Remedy Facilities and Restoration.	The remedy, as presented in the 90% design, does not substantially burden a person's exercise of religion. Additionally, in compliance with the PA, a Tribal Access Plan (BLM 2011) was completed for Tribal access to lands under federal management within the Topock site for traditional religious, cultural, or spiritual purposes during implementation of the Remedy. On October 21, 2013, PG&E provided the Tribes a draft of the Access Plan for lands not under federal management for review and comment. Tribal comments were received on November 22, 2013. PG&E has updated and discussed the plan at the July 24, 2014 TMU. The Access Plan is included in an appendix of the Construction/Remedial Action Work Plan. BLM also developed the CHPMP to avoid, minimize and mitigate potential affects to historic properties, including the Topock TCP, during implementation of the Remedy. BLM issued the final CHPMP on January 20, 2012. The CHPMP can be modified and updated, as needed, to address new information and ongoing activities related to the project. Therefore, subsequently to the issuance of the CHPMP, BLM continues to hold periodic working meetings on the CHPMP. It should be noted that treatment measures are included in the CHPMP and a treatment plan will be prepared and submitted to	The remedy, as presented in the final design, does not substantially burden a person's exercise of religion. Additionally, in compliance with the PA, a Tribal Access Plan (BLM 2011) was completed for Tribal access to lands under federal management within the Topock site for traditional religious, cultural, or spiritual purposes during implementation of the remedy. PG&E has prepared an Access Plan in coordination with Tribes, for the lands not under federal management, taking into consideration the information in the BLM Access Plan. The Access Plan is included in an appendix of the Construction/Remedial Action Work Plan and was submitted on November 18, 2015. PG&E's Tribal Access Plan preserves Tribal members' access to, and use of, the project area for religious, spiritual, or other cultural purposes, to the extent that PG&E has the authority to facilitate such access, consistent with the requirements of EIR mitigation measure CUL-1a-2. BLM also developed the CHPMP to avoid, minimize and mitigate potential affects to historic properties, including the Topock TCP, during implementation of the Remedy. BLM issued the final CHPMP on January 20, 2012. The CHPMP can be modified and updated, as needed, to address new information and ongoing activities related to the project. Therefore, subsequently to the issuance of the CHPMP, BLM continues

TABLE L1.1-3
Summary of Compliance with Identified ARARs
Groundwater Remedy Basis of Design Report/Final (100%) Design
PG&E Topock Compressor Station, Needles, California

Item No.[1]	Category[1]	Citation[1,2]	Determination[1,2]	Description in DOI's ARARs Table[1,2]	Triggering Event	Compliance Responsibility	Which existing/ future document(s) will document continued compliance with this ARAR?[4]	Action (Compliance Status)			
								Preliminary (30%) Design	Intermediate (60%) Design	Pre-Final (90%)/Supplemental 90% Design	Final (100%) Design
										DTSC shortly after submission of the 90% design. The 90% design was submitted on September 8, 2014. A Construction/Remedial Action Work Plan and a plan for decommissioning, removal, and restoration of the IM-3 facility were submitted concurrently with the 90% design. In compliance with the CD (Appendix C Scope of Work, Item 9), a Decommissioning Plan for Remedy Facilities will be submitted within 120 days of receipt of DOI's certification of completion of the RA and a determination by DOI that removal of such facilities is protective of human health and the environment.	to hold periodic working meetings on the CHPMP. It should be noted that treatment measures are included in the CHPMP and also in the Cultural and Historical Property Treatment Plan submitted to DTSC and DOI with the 90% design submittal. The final design was submitted on November 18, 2015. A Construction/Remedial Action Work Plan and a plan for decommissioning, removal, and restoration of the IM-3 facility were submitted concurrently with the final design. In compliance with the CD (Appendix C Scope of Work, Item 9), a Decommissioning Plan for Remedy Facilities will be submitted within 120 days of receipt of DOI's certification of completion of the RA and a determination by DOI that removal of such facilities is protective of human health and the environment.

TABLE L1.1-3
Summary of Compliance with Identified ARARs
Groundwater Remedy Basis of Design Report/Final (100%) Design
PG&E Topock Compressor Station, Needles, California

Item No.[1]	Category[1]	Citation[1,2]	Determination[1,2]	Description in DOI's ARARs Table[1,2]	Triggering Event	Compliance Responsibility	Which existing/ future document(s) will document continued compliance with this ARAR?[4]	Action (Compliance Status)			
								Preliminary (30%) Design	Intermediate (60%) Design	Pre-Final (90%)/Supplemental 90% Design	Final (100%) Design
40	Federal Action-Specific	Endangered Species Act of 1973 - 16 USC §§ 1531-1544;50 CFR 402	ARAR Applicable	The ESA makes it unlawful to remove or "take" threatened and endangered plants and animals and protects their habitats by prohibiting certain activities. Examples of such species in or around the Topock site may include, but are not limited to, southwestern willow flycatcher, Mojave Desert tortoise, Yuma clapper rail, Colorado pike minnow, razorback sucker, and bonytail chub. Any remedial action selected for the Topock site will not result in the take of, or adverse impacts to, threatened and endangered species or their habitats, as determined based on consultation with the Fish and Wildlife Service under section 7 of the ESA.	Extension of existing PBA through December 31, 2017 or construction of remedy, whichever is sooner	DOI/USFWS/ PG&E	PBA, Construction/ Remedial Action Work Plan, Plan for decommissioning, removal, and restoration of IM-3 facility, Plan for Decommissioning of Remedy Facilities and Restoration.	PG&E, USFWS, and DOI are coordinating on the Programmatic Biological Assessment (PBA) for the final groundwater remedy. Goal is to complete the PBA in time for the completion of ESA Section 7 consultation prior to the approval of the Construction/Remedial Action Work Plan.	Preparation of the PBA for the final groundwater remedy and coordination with USFWS and DOI are ongoing. Goal is to complete the PBA in time for the completion of ESA Section 7 consultation prior to the approval of the Construction/Remedial Action Work Plan.	The Final Groundwater Remedy PBA was prepared to support informal consultations for actions to be conducted under the remedial action, including activities located on BLM and U.S. Fish and Wildlife Service administered lands. Coordination with USFWS, BLM, and DOI on the PBA had occurred. This ESA Section 7 consultation was concluded with receipt of USFWS concurrency letter on July 7, 2014 which preceded the approval of the Construction/ Remedial Action Work Plan.	The Final Groundwater Remedy PBA was prepared to support informal consultations for actions to be conducted under the remedial action, including activities located on BLM and U.S. Fish and Wildlife Service administered lands. Coordination with USFWS, BLM, and DOI on the PBA occurred. This ESA Section 7 consultation was concluded with receipt of USFWS concurrence letter on July 7, 2014 which preceded the approval of the Construction/ Remedial Action Work Plan.
41	Federal Action-Specific	Migratory Bird Treaty Act - 16 USC 703-712	ARAR Applicable	This Act makes it unlawful to "take, capture, kill," or otherwise impact a migratory bird or any nest or egg of a migratory bird. The Havasu National Wildlife Refuge, which is part of the Topock site, was created as a refuge and breeding ground for migratory birds and other wildlife, therefore, there is potential for contact with migratory birds during proposed remediation activities. Any remedial action selected for the Topock site will be designed and implemented so as to not take, capture, kill, or otherwise impact a migratory bird, nest, or egg.	Remedial action for Topock site	PG&E	Construction/ Remedial Action Work Plan, Plan for decommissioning, removal, and restoration of IM-3 facility, Plan for Decommissioning of Remedy Facilities and Restoration	Avoidance and minimization measures will be included in the Construction/Remedial Action Work Plan to the extent necessary to not take, capture, kill, or otherwise impact a migratory bird, nest, or egg.	Avoidance and minimization measures will be included in the Construction/Remedial Action Work Plan, which will be submitted as part of the 90% design, to the extent necessary to not take, capture, kill, or otherwise impact a migratory bird, nest, or egg. Regarding decommissioning activities, the Avoidance and Minimization Plan and Habitat Restoration Plan will be based on surveys conducted prior to decommissioning, and during the breeding season; therefore these Plans will be prepared in the future, prior to decommissioning. The IM-3 Decommissioning Work Plan will describe the general procedures for restoration of the land and habitats.	PG&E submitted the Final Bird Impact Avoidance and Minimization Plan (CH2M HILL, 2014d) on April 30, 2014. The plan is also included as an appendix of the Construction/Remedial Action Work Plan, and Appendix I of the IM-3 Decommissioning Work Plan. Regarding decommissioning activities, the Avoidance and Minimization Plan will be based on surveys conducted prior to decommissioning, and during the breeding season; therefore this Plan will be prepared in the future, prior to decommissioning.	PG&E submitted the Final Bird Impact Avoidance and Minimization Plan (CH2M HILL 2014d) on April 30, 2014. The plan is also included as an appendix of the Construction/Remedial Action Work Plan, and Appendix I of the IM-3 Decommissioning Work Plan. Regarding decommissioning activities, another Avoidance and Minimization Plan will be based on surveys conducted prior to decommissioning, and during the breeding season; therefore this Plan will be prepared in the future, prior to decommissioning.

TABLE L1.1-3
Summary of Compliance with Identified ARARs
Groundwater Remedy Basis of Design Report/Final (100%) Design
PG&E Topock Compressor Station, Needles, California

Item No.[1]	Category[1]	Citation[1,2]	Determination[1,2]	Description in DOI's ARARs Table[1,2]	Triggering Event	Compliance Responsibility	Which existing/ future document(s) will document continued compliance with this ARAR?[4]	Action (Compliance Status)			
								Preliminary (30%) Design	Intermediate (60%) Design	Pre-Final (90%)/Supplemental 90% Design	Final (100%) Design
45	Arizona Action-Specific	Arizona Well Standards - A.A.C. R-12-15-850	ARAR	These requirements on the placement of wells will apply if the selected remedy includes placement of wells in Arizona.	During project design and construction of wells in Arizona	PG&E		The preliminary (30%) design assumes that freshwater supply comes from the existing irrigation well (HNWR-1) on the Refuge in Arizona. If the Refuge irrigation well is not used in the final design, placement of new freshwater supply wells will be needed. In addition, new monitoring wells may also be constructed in Arizona, the locations of the monitoring wells will be presented in the intermediate (60%) design. Wells constructed in Arizona will comply with the Arizona Well Standards	The 60% design assumes that freshwater supply comes from the existing well (HNWR-1) on the Refuge in Arizona, and does not include any new monitoring wells in Arizona. If the Refuge irrigation well is not used in the final design, placement of new freshwater supply wells will be needed. If any new wells are constructed in Arizona they will comply with the Arizona Well Standards.	While the 90% design includes freshwater supply from existing wells in Arizona, these supply wells are part of the alternative freshwater source evaluation (also known as the Fresh Water Implementation Plan [FWIP]). Compliance with ARARs, including the Arizona Well Standards, for the supply wells are included in the FWIP. If additional wells in Arizona are required, they will comply with the Arizona Well Standards.	While the final design includes freshwater supply (planned and contingent) from existing wells in Arizona, two of these supply wells (HNWR-1A and Site B) are part of the alternative freshwater source evaluation (also known as the Fresh Water Implementation Plan [FWIP]). Compliance with ARARs, including the Arizona Well Standards, for these supply wells are included in the FWIP. If additional wells in Arizona are required, they will comply with the Arizona Well Standards.
46	Arizona Action-Specific	Design criteria for treatment units - A.A.C. R18-5-(501-502)	ARAR	These minimum design criteria will apply if the selected remedy includes construction of a groundwater treatment plant.	Construction of treatment plant in Arizona	PG&E	N/A. No further action required unless post-design approval change triggers.	No further action is required. The preliminary (30%) design does not involve the construction of a groundwater treatment plant in Arizona.	No further action is required. The 60% design does not involve the construction of a groundwater treatment plant in Arizona.	No further action is required. The 90% design does not involve the construction of a groundwater treatment plant in Arizona.	No further action is required. The final design does not involve the construction of a groundwater treatment plant in Arizona.
47	Arizona Action-Specific	Requirements for wells, groundwater withdrawal, treatment, and reinjection -A.R.S. §45-454.01	ARAR	This statute exempts new well construction, withdrawal, treatment, and reinjection into a groundwater aquifer as a part of a CERCLA Remedial Action from the requirements of the Arizona Groundwater Code, except that they must comply with the substantive requirements of A.R.S. 45-594, 45-595, 45-596, and 45-600. If groundwater that is withdrawn is not reinjected into the aquifer, the groundwater shall be put to reasonable and beneficial use.	Construction of wells in Arizona	PG&E		This remediation project is a CERCLA remedial action. If a new freshwater supply well or additional monitoring wells in Arizona are required they will be constructed in conformance with State construction standards (A.R.S 45-594) by a State-licensed well driller (A.R.S. 45-595). A notice of intention to drill will be filed (A.R.S. 45-596), and a well driller's report will be filed within 30 days of completion of drilling (A.R.S. 45-600). Most of the groundwater that is withdrawn will be reinjected into the aquifer. Any groundwater that is withdrawn but not reinjected into the aquifer shall be put to reasonable and beneficial use.	This remediation project is a CERCLA remedial action. The 60% design assumes that freshwater supply comes from the existing irrigation well (HNWR-1) on the Refuge in Arizona, and does not include any new monitoring wells in Arizona. If a new freshwater supply well or additional monitoring wells in Arizona are required they will be constructed in conformance with State construction standards (A.R.S. 45-594) by a State-licensed well driller (A.R.S. 45-595). A notice of intention to drill will be filed (A.R.S. 45-596), and a well driller's report will be filed within 30 days of completion of drilling (A.R.S. 45-600). Most of the groundwater that is withdrawn will be reinjected into the aquifer. Any groundwater that is withdrawn but not reinjected into the aquifer shall be put to reasonable and beneficial use.	While the 90% design includes freshwater supply from existing wells in Arizona, these supply wells are part of the alternative freshwater source evaluation (also known as the Fresh Water Implementation Plan [FWIP]). Compliance with ARARs, including the Arizona Well Standards, for the supply wells are included in the FWIP. If a new freshwater supply well or additional monitoring wells in Arizona are required they will be constructed in conformance with State construction standards (A.R.S. 45-594) by a State-licensed well driller (A.R.S. 45-595). A notice of intention to drill will be filed (A.R.S. 45-596), and a well driller's report will be filed within 30 days of completion of drilling (A.R.S. 45-600). Most of the groundwater that is withdrawn will be reinjected	While the final design includes freshwater supply (planned and contingent) from existing wells in Arizona, two of these supply wells (HNWR-1A and Site B) are part of the alternative freshwater source evaluation (also known as the Fresh Water Implementation Plan [FWIP]). Compliance with ARARs for these supply wells are included in the FWIP. Most of the groundwater that is withdrawn will be reinjected into the aquifer. Any groundwater that is withdrawn but not reinjected into the aquifer shall be put to reasonable and beneficial use. If additional wells in Arizona are required, they will be constructed in conformance with state construction standards (A.R.S. 45-594) by a state-licensed well driller (A.R.S. 45-595). A notice of

TABLE L1.1-3
Summary of Compliance with Identified ARARs
Groundwater Remedy Basis of Design Report/Final (100%) Design
PG&E Topock Compressor Station, Needles, California

Item No.[1]	Category[1]	Citation[1,2]	Determination[1,2]	Description in DOI's ARARs Table[1,2]	Triggering Event	Compliance Responsibility	Which existing/ future document(s) will document continued compliance with this ARAR?[4]	Action (Compliance Status)			
								Preliminary (30%) Design	Intermediate (60%) Design	Pre-Final (90%)/Supplemental 90% Design	Final (100%) Design
										into the aquifer. Any groundwater that is withdrawn but not reinjected into the aquifer shall be put to reasonable and beneficial use.	intention to drill will be filed (A.R.S. 45-596), and a well driller's report will be filed within 30 days of completion of drilling (A.R.S. 45-600).
48	Arizona Action-Specific	Well construction standards -A.R.S. §45-594 and 595	ARAR	These provisions identify the well construction standards and requirements for new well construction in the State of Arizona. These requirements will apply if the selected remedy involves the construction of wells in Arizona.	Construction of wells in Arizona	PG&E		The preliminary (30%) design assumes that freshwater supply comes from the existing irrigation well (HNWR-1) on the Refuge in Arizona. If the Refuge irrigation well is not used in the final design, placement of new freshwater supply wells will be needed. In addition, new monitoring wells may also be constructed in Arizona, the locations of the monitoring wells will be presented in the intermediate (60%) design. If a new freshwater supply well or additional monitoring wells in Arizona are required they will be constructed in conformance with State construction standards (A.R.S 45-594) by a State-licensed well driller (A.R.S. 45-595).	The 60% design assumes that freshwater supply comes from the existing irrigation well (HNWR-1) on the Refuge in Arizona, and does not include any new monitoring wells in Arizona. If the Refuge irrigation well is not used in the final design, placement of new freshwater supply wells will be needed. If a new freshwater supply well or additional monitoring wells in Arizona are required they will be constructed in conformance with State construction standards (A.R.S. 45-594) by a State-licensed well driller (A.R.S. 45-595).	While the 90% design includes freshwater supply from existing wells in Arizona, these supply wells are part of the alternative freshwater source evaluation (also known as the Fresh Water Implementation Plan [FWIP]). Compliance with ARARs, including the Arizona Well Standards, for the supply wells are included in the FWIP. If a new freshwater supply well or additional monitoring wells in Arizona are required they will be constructed in conformance with State construction standards (A.R.S. 45-594) by a State-licensed well driller (A.R.S. 45-595).	While the final design includes freshwater supply (planned and contingent) from existing wells in Arizona, two of these supply wells (HNWR-1A and Site B) are part of the alternative freshwater source evaluation (also known as the Fresh Water Implementation Plan [FWIP]). Compliance with ARARs for these supply wells are included in the FWIP. If a new freshwater supply well or additional monitoring wells in Arizona are required they will be constructed in conformance with state construction standards (A.R.S. 45-594) by a state-licensed well driller (A.R.S. 45-595).
49	Arizona Action-Specific	Notice of intention to drill - A.R.S. §45-596	ARAR	Substantive requirements will apply if the selected remedy involves the construction of wells in Arizona.	Construction of wells in Arizona	PG&E		The preliminary (30%) design assumes that freshwater supply comes from the existing irrigation well (HNWR-1) on the Refuge in Arizona. If the Refuge irrigation well is not used in the final design, placement of new freshwater supply wells will be needed. In addition, new monitoring wells may also be constructed in Arizona, the locations of the monitoring wells will be presented in the intermediate (60%) design. If a new freshwater supply well or additional monitoring wells in Arizona are required, a notice of intention to drill will be filed (A.R.S. 45-596).	The 60% design assumes that freshwater supply comes from the existing irrigation well (HNWR-1) on the Refuge in Arizona, and does not include any new monitoring wells in Arizona. If the Refuge irrigation well is not used in the final design, placement of new freshwater supply wells will be needed. If a new freshwater supply well or additional monitoring wells in Arizona are required, a notice of intention to drill will be filed (A.R.S. 45-596).	While the 90% design includes freshwater supply from existing wells in Arizona, these supply wells are part of the alternative freshwater source evaluation (also known as the Fresh Water Implementation Plan [FWIP]). Compliance with ARARs, including the Arizona Well Standards, for the supply wells are included in the FWIP. If a new freshwater supply well or additional monitoring wells in Arizona are required, a notice of intention to drill will be filed (A.R.S. 45-596).	While the final design includes freshwater supply (planned and contingent) from existing wells in Arizona, two of these supply wells (HNWR-1A and Site B) are part of the alternative freshwater source evaluation (also known as the Fresh Water Implementation Plan [FWIP]). Compliance with ARARs for these supply wells are included in the FWIP. If a new freshwater supply well or additional monitoring wells in Arizona are required, a notice of intention to drill will be filed (A.R.S. 45-596).

TABLE L1.1-3
Summary of Compliance with Identified ARARs
Groundwater Remedy Basis of Design Report/Final (100%) Design
PG&E Topock Compressor Station, Needles, California

Item No.[1]	Category[1]	Citation[1,2]	Determination[1,2]	Description in DOI's ARARs Table[1,2]	Triggering Event	Compliance Responsibility	Which existing/ future document(s) will document continued compliance with this ARAR?[4]	Action (Compliance Status)			
								Preliminary (30%) Design	Intermediate (60%) Design	Pre-Final (90%)/Supplemental 90% Design	Final (100%) Design
50	Arizona Action-Specific	Report by driller - A.R.S. §45-600	ARAR	Substantive requirements will apply if the selected remedy involves the construction of wells in Arizona.	Construction of wells in Arizona	PG&E		The preliminary (30%) design assumes that freshwater supply comes from the existing irrigation well (HNWR-1) on the Refuge in Arizona. If the Refuge irrigation well is not used in the final design, placement of new freshwater supply wells will be needed. In addition, new monitoring wells may also be constructed in Arizona, the locations of the monitoring wells will be presented in the intermediate (60%) design. If a new freshwater supply well or additional monitoring wells in Arizona are required, a well driller's report will be filed within 30 days of completion of drilling (A.R.S. 45-600).	The 60% design assumes that freshwater supply comes from the existing irrigation well (HNWR-1) on the Refuge in Arizona, and does not include any new monitoring wells in Arizona. If the Refuge irrigation well is not used in the final design, placement of new freshwater supply wells will be needed. If a new freshwater supply well or additional monitoring wells in Arizona are required, a well driller's report will be filed within 30 days of completion of drilling (A.R.S. 45-600).	While the 90% design includes freshwater supply from existing wells in Arizona, these supply wells are part of the alternative freshwater source evaluation (also known as the Fresh Water Implementation Plan [FWIP]). Compliance with ARARs, including the Arizona Well Standards, for the supply wells are included in the FWIP. If a new freshwater supply well or additional monitoring wells in Arizona are required, a well driller's report will be filed within 30 days of completion of drilling (A.R.S. 45-600).	While the final design includes freshwater supply (planned and contingent) from existing wells in Arizona, two of these supply wells (HNWR-1A and Site B) are part of the alternative freshwater source evaluation (also known as the Fresh Water Implementation Plan [FWIP]). Compliance with ARARs for these supply wells are included in the FWIP. If a new freshwater supply well or additional monitoring wells in Arizona are required, a well driller's report will be filed within 30 days of completion of drilling (A.R.S. 45-600).
51	Arizona Action-Specific	Arizona Remedial Action Requirements - A.R.S. §49-282.06(A)(2)	ARAR	Any treatment of groundwater must be conducted in a manner to provide for the maximum beneficial use of the waters of the state.	Treatment of groundwater in Arizona	PG&E	Not applicable. No further action required unless post-design approval change triggers.	No further action is required. The preliminary (30%) design does not involve treatment of groundwater in Arizona.	No further action is required. The intermediate (60%) design does not involve treatment of groundwater in Arizona.	No further action is required. The pre-final (90%) design does not involve treatment of groundwater in Arizona.	No further action is required. The final design does not involve treatment of groundwater in Arizona.
74	California Action-Specific	Hazardous Waste Control Act (HWCA) - Standards applicable to generators of hazardous waste Title 22, CCR, Div 4.5, Ch 12, Article 1, §66262.11	ARAR Applicable	Owners or operators who generate waste shall determine whether waste is a hazardous waste. Applicable for any operation where waste is generated. The determination of whether wastes generated during remedial activities are hazardous shall be made when the wastes are generated.	Activity that generates waste that could potentially be hazardous	PG&E	O&M Plan, Construction/ Remedial Action Work Plan, Plan for Decommissioning and Removal of IM-3 Facility and Site Restoration; Plan for Decommissioning of Remedy Facilities and Restoration	PG&E will prepare an O&M Plan, a Construction/Remedial Action Work Plan, and a Plan for Decommissioning of IM-3 Facility prior to construction activities. These plans will describe waste management procedures. Waste generated during construction and operation of the remedy will be evaluated when the wastes are generated to determine if they are hazardous wastes.	PG&E will prepare an O&M Plan, a Construction/Remedial Action Work Plan, and a Plan for Decommissioning of IM-3 Facility prior to construction activities. These plans will describe waste management procedures. Waste management is described in Section 6 of the O&M Plan (Volume 1), which is included in this BOD Report for the 60% design as Appendix L. The Construction/Remedial Action Work Plan will be submitted as part of the 90% design. The Plan for Decommissioning of the IM-3 Facility will also be submitted as part of the 90% design. Waste generated during construction and operation of the remedy will be evaluated when the wastes are generated to determine if they are hazardous wastes.	Waste management procedures are described in the following documents: 1) O&M Plan (Volume 1 of O&M Manual), Section 6, Waste Management Plan and Recoverable Materials, describes procedures for the collection, characterization, storage, transportation, and disposal of waste generated during operation and maintenance of the remedy. 2) Soil Management Plan (Volume 4 of O&M Manual), includes procedures and protocols for the management and disposal of potentially contaminated or contaminated soils displaced during drilling, construction, operation and maintenance of the remedy, and decommissioning and removal of IM-3 facilities. 3) The Waste Management Plan in an appendix of the	Waste management procedures are described in the following documents: 1) O&M Plan (Volume 1 of O&M Manual), Section 6, Waste Management Plan and Recoverable Materials, describes procedures for the collection, characterization, storage, transportation, and disposal of waste generated during operation and maintenance of the remedy. 2) Soil Management Plan (Volume 4 of O&M Manual) includes procedures and protocols for the management and disposal of potentially contaminated or contaminated soils displaced during drilling, construction, operation and maintenance of the remedy, and decommissioning and removal of IM-3 facilities. 3) The Waste Management Plan in an appendix of the

TABLE L1.1-3
Summary of Compliance with Identified ARARs
Groundwater Remedy Basis of Design Report/Final (100%) Design
PG&E Topock Compressor Station, Needles, California

Item No.[1]	Category[1]	Citation[1,2]	Determination[1,2]	Description in DOI's ARARs Table[1,2]	Triggering Event	Compliance Responsibility	Which existing/ future document(s) will document continued compliance with this ARAR?[4]	Action (Compliance Status)			
								Preliminary (30%) Design	Intermediate (60%) Design	Pre-Final (90%)/Supplemental 90% Design	Final (100%) Design
										Construction/Remedial Action Work Plan includes procedures for the management of wastes (other than soil) generated during construction and startup of the remedy. 4) IM-3 Decommissioning, Removal, and Restoration Work Plan, Section 5, Waste Management Plan and Recoverable Materials includes procedures for collection, characterization, storage, transportation, and disposal of wastes (other than soil) generated during the decommissioning and removal of IM-3 facilities.	Construction/Remedial Action Work Plan includes procedures for the management of wastes (other than soil) generated during construction and startup of the remedy. 4) IM-3 Decommissioning, Removal, and Restoration Work Plan, Section 5, Waste Management Plan and Recoverable Materials includes procedures for collection, characterization, storage, transportation, and disposal of wastes (other than soil) generated during the decommissioning and removal of IM-3 facilities.
75	California Action-Specific	Hazardous Waste Control Act (HWCA) -Title 22, CCR, Div 4.5, Ch 12, Article 1, §66262.12	ARAR Applicable	A generator shall not treat, store, dispose of, transport or offer for transportation, hazardous waste without having received an identification number. Substantive requirements will be applicable for any operation where waste is generated. The determination of whether wastes generated during remedial activities are hazardous shall be made when the wastes are generated.	Activity that generates waste that could potentially be hazardous	PG&E	USEPA ID Number	Hazardous waste generated by the final remedy will be managed under the existing USEPA ID number for the Topock groundwater remediation area, CAR000151118.	Hazardous waste generated by the final remedy will be managed under the existing USEPA ID number for the Topock groundwater remediation area, CAR000151118.	Hazardous waste generated by the final remedy will be managed under the existing USEPA ID number for the Topock groundwater remediation area, CAR000151118.	Hazardous waste generated by the final remedy will be managed under the existing USEPA ID number for the Topock groundwater remediation area, CAR000151118.

TABLE L1.1-3
Summary of Compliance with Identified ARARs
Groundwater Remedy Basis of Design Report/Final (100%) Design
PG&E Topock Compressor Station, Needles, California

Item No.[1]	Category[1]	Citation[1,2]	Determination[1,2]	Description in DOI's ARARs Table[1,2]	Triggering Event	Compliance Responsibility	Which existing/ future document(s) will document continued compliance with this ARAR?[4]	Action (Compliance Status)			
								Preliminary (30%) Design	Intermediate (60%) Design	Pre-Final (90%)/Supplemental 90% Design	Final (100%) Design
76	California Action-Specific	Hazardous Waste Control Act (HWCA) - Standards for owners and operators of hazardous waste transfer and TSD facilities Title 22, CCR, Div 4.5, Ch 14, Article 2	ARAR Applicable	Establish requirements for a hazardous waste treatment facility to have a plan for waste analysis, develop a security system, conduct regular inspections, provide training to facility personnel, and use a quality assurance program during construction. The requirements may be applicable if CERCLA response action includes treatment, storage, or disposal as defined under RCRA, or may be relevant and appropriate if the requirements address problems or situations sufficiently similar to the specific circumstances at the site that their usage will be well suited.	Activity associated with construction and operation of a treatment facility or long term (longer than 90 days) storage of hazardous waste. If waste is simply removed, stored in appropriate containers after characterization, and removed off-site within 90 days, PG&E will be required to follow the substantive requirements of PG&E of a generator, including use of manifests, record keep, segregation of incompatibles, etc.	PG&E	O&M Plan, Construction/ Remedial Action Work Plan, Plan for Decommissioning and Removal of IM-3 Facility and Site Restoration; Plan for Decommissioning of Remedy Facilities and Restoration	In-situ treatment of contaminated groundwater or conditioning of remedy-produced water does not comprise a hazardous waste treatment facility as defined in the hazardous waste regulations. However, a variety of these provisions will be addressed in documents such as the O&M Plan, Soil Management Plan prepared under EIR mitigation measure HAZ-2c, and the Security Plan prepared under EIR mitigation measure CUL-1a-3b. Waste analysis procedures will be addressed in standard operating procedures for the treatment/conditioning process that will be developed.	In-situ treatment of contaminated groundwater or conditioning of remedy-produced water does not comprise a hazardous waste treatment facility as defined in the hazardous waste regulations. However, a variety of these provisions will be addressed in documents such as the O&M Plan, Soil Management Plan prepared under EIR mitigation measure HAZ-2c, and the Security Plan prepared under EIR mitigation measure CUL-1a-3b. Waste management, including waste analysis, is described in Section 6 of the O&M Manual, which is included in this BOD Report for the 60% design as Appendix L. The Soil Management Plan is also included in the O&M Manual (Volume 4).	In-situ treatment of contaminated groundwater or conditioning of remedy-produced water does not comprise a hazardous waste treatment facility as defined in the hazardous waste regulations. However, a variety of these provisions are addressed in documents such as the O&M Plan, the Soil Management Plan prepared under EIR mitigation measure HAZ-2c, the Construction/ Remedial Action Work Plan (including the Construction Quality Assurance Project Plan), and the Security Plan prepared under EIR mitigation measure CUL-1a-3b. Waste management, including waste analysis, is described in: a) Section 6 of the O&M Plan, which is included in the BOD Report for the 90% design as Volume 1 of the O&M Manual (Appendix L), b) The Soil Management Plan, which is included in Volume 4 of the O&M Manual (Appendix L), c) The Waste Management Plan, which is included as an appendix of the Construction/ Remedial Action Work Plan, and d) Section 5 of the IM-3 Decommissioning, Removal, and Restoration Work Plan (appendix to the CIMP and to the Construction/Remedial Action Work Plan).	In-situ treatment of contaminated groundwater or conditioning of remedy-produced water does not comprise a hazardous waste treatment facility as defined in the hazardous waste regulations. However, a variety of these provisions are addressed in documents such as the O&M Plan, the Soil Management Plan prepared under EIR mitigation measure HAZ-2c, the Construction/ Remedial Action Work Plan (including the Construction Quality Assurance Project Plan), and the Security Plan prepared under EIR mitigation measure CUL-1a-3b. Waste management, including waste analysis, is described in: a) Section 6 of the O&M Plan, which is included in the BOD Report for the final design as Volume 1 of the O&M Manual (Appendix L), b) The Soil Management Plan, which is included in Volume 4 of the O&M Manual (Appendix L), c) The Waste Management Plan, which is included as an appendix of the Construction/ Remedial Action Work Plan, and d) Section 5 of the IM-3 Decommissioning, Removal, and Restoration Work Plan (appendix to the CIMP and to the Construction/Remedial Action Work Plan).

TABLE L1.1-3
Summary of Compliance with Identified ARARs
Groundwater Remedy Basis of Design Report/Final (100%) Design
PG&E Topock Compressor Station, Needles, California

Item No.[1]	Category[1]	Citation[1,2]	Determination[1,2]	Description in DOI's ARARs Table[1,2]	Triggering Event	Compliance Responsibility	Which existing/ future document(s) will document continued compliance with this ARAR?[4]	Action (Compliance Status)			
								Preliminary (30%) Design	Intermediate (60%) Design	Pre-Final (90%)/Supplemental 90% Design	Final (100%) Design
77	California Action-Specific	Hazardous Waste Control Act (HWCA) - Standards applicable to generators of hazardous waste Title 22, CCR, Div 4.5, Ch 12, Article 2, §66262.20, §66262.22	ARAR Applicable	A generator of hazardous waste who transports or offers hazardous waste for transportation shall prepare a manifest. Substantive requirements will be applicable for any operation where waste is generated. The determination of whether wastes generated during remedial activities are hazardous shall be made when the wastes are generated.	Preparation of offsite shipment of hazardous waste	PG&E	O&M Plan, Construction/ Remedial Action Work Plan, Plan for Decommissioning and Removal of IM-3 Facility and Site Restoration; Plan for Decommissioning of Remedy Facilities and Restoration	PG&E will prepare an O&M Plan, a Construction/Remedial Action Work Plan, and a Plan for Decommissioning of IM-3 Facility prior to construction activities. These plans will describe waste management procedures. Hazardous waste manifests will be prepared for each off-site shipment of hazardous waste.	Waste management is described in Section 6 of the O&M Plan (Volume 1), which is included in this BOD Report for the 60% design as Appendix L. Waste management will also be described in the Construction/Remedial Action Work Plan and the Plan for Decommissioning of the IM-3 Facility that will be submitted as part of the 90% design. Hazardous waste manifests will be prepared for each off-site shipment of hazardous waste.	Waste management procedures are described in the following documents: 1) O&M Plan (Volume 1 of O&M Manual), Section 6, Waste Management Plan and Recoverable Materials describes procedures for the collection, characterization, storage, transportation, and disposal of waste generated during operation and maintenance of the remedy. 2) Soil Management Plan (Volume 4 of O&M Manual) includes procedures and protocols for the management and disposal of potentially contaminated or contaminated soils displaced during drilling, construction, operation and maintenance of the remedy, and decommissioning and removal of IM-3 facilities. 3) The Waste Management Plan in an appendix of the Construction/Remedial Action Work Plan includes procedures for the management of wastes (other than soil) generated during construction and startup of the remedy. 4) IM-3 Decommissioning, Removal, and Restoration Work Plan, Section 5, Waste Management Plan and Recoverable Materials includes procedures for collection, characterization, storage, transportation, and disposal of wastes (other than soil) generated during the decommissioning and removal of IM-3 facilities. Hazardous waste manifests will be prepared for each off-site shipment of hazardous waste.	Waste management procedures are described in the following documents: 1) O&M Plan (Volume 1 of O&M Manual), Section 6, Waste Management Plan and Recoverable Materials describes procedures for the collection, characterization, storage, transportation, and disposal of waste generated during operation and maintenance of the remedy. 2) Soil Management Plan (Volume 4 of O&M Manual) includes procedures and protocols for the management and disposal of potentially contaminated or contaminated soils displaced during drilling, construction, operation and maintenance of the remedy, and decommissioning and removal of IM-3 facilities. 3) The Waste Management Plan in an appendix of the Construction/Remedial Action Work Plan includes procedures for the management of wastes (other than soil) generated during construction and startup of the remedy. 4) IM-3 Decommissioning, Removal, and Restoration Work Plan, Section 5, Waste Management Plan and Recoverable Materials includes procedures for collection, characterization, storage, transportation, and disposal of wastes (other than soil) generated during the decommissioning and removal of IM-3 facilities. Hazardous waste manifests will be prepared for each off-site shipment of hazardous waste.

TABLE L1.1-3
Summary of Compliance with Identified ARARs
Groundwater Remedy Basis of Design Report/Final (100%) Design
PG&E Topock Compressor Station, Needles, California

Item No.[1]	Category[1]	Citation[1,2]	Determination[1,2]	Description in DOI's ARARs Table[1,2]	Triggering Event	Compliance Responsibility	Which existing/ future document(s) will document continued compliance with this ARAR?[4]	Action (Compliance Status)			
								Preliminary (30%) Design	Intermediate (60%) Design	Pre-Final (90%)/Supplemental 90% Design	Final (100%) Design
78	California Action-Specific	Hazardous Waste Control Act (HWCA) - Standards applicable to generators of hazardous waste Title 22, CCR, Div 4.5, Ch 12, Article 3, §66262.30, §66262.31, §66262.32, §66262.33	ARAR Applicable	Before transporting hazardous waste or offering hazardous waste for transportation off-site, the generator must do the following in accordance with DOT regulations: package the waste, label and mark each package of hazardous waste, and ensure that the transport vehicle is correctly placarded.	Preparation of offsite shipment of hazardous waste	PG&E	O&M Plan, Construction/ Remedial Action Work Plan, Plan for Decommissioning and Removal of IM-3 Facility and Site Restoration; Plan for Decommissioning of Remedy Facilities and Restoration	PG&E will prepare an O&M Plan, a Construction/Remedial Action Work Plan, and a Plan for Decommissioning of IM-3 Facility prior to construction activities. These plans will describe waste management procedures. Hazardous waste will be managed in accordance with Title 22 CCR Div 4.5, Ch 12, Article 3, §66262.30, §66262.31, §66262.32, and §66262.33..	Waste management is described in Section 6 of the O&M Plan (Volume 1), which is included in this BOD Report for the 60% design as Appendix L. Waste management will also be described in the Construction/Remedial Action Work Plan and the Plan for Decommissioning of the IM-3 Facility that will be submitted as part of the 90% design. Hazardous waste will be managed in accordance with Title 22 CCR Div 4.5, Ch 12, Article 3, §66262.30, §66262.31, §66262.32, and §66262.33.	Waste management procedures are described in the following documents: 1) O&M Plan (Volume 1 of O&M Manual), Section 6, Waste Management Plan and Recoverable Materials, describes procedures for the collection, characterization, storage, transportation, and disposal of waste generated during operation and maintenance of the remedy. 2) Soil Management Plan (Volume 4 of O&M Manual), includes procedures and protocols for the management and disposal of potentially contaminated or contaminated soils displaced during drilling, construction, operation and maintenance of the remedy, and decommissioning and removal of IM-3 facilities. 3) The Waste Management Plan in an appendix of the Construction/Remedial Action Work Plan includes procedures for the management of wastes (other than soil) generated during construction and startup of the remedy. 4) IM-3 Decommissioning, Removal, and Restoration Work Plan, Section 5, Waste Management Plan and Recoverable Materials includes procedures for collection, characterization, storage, transportation, and disposal of wastes (other than soil) generated during the decommissioning and removal of IM-3 facilities.	Waste management procedures are described in the following documents: 1) O&M Plan (Volume 1 of O&M Manual), Section 6, Waste Management Plan and Recoverable Materials, describes procedures for the collection, characterization, storage, transportation, and disposal of waste generated during operation and maintenance of the remedy. 2) Soil Management Plan (Volume 4 of O&M Manual), includes procedures and protocols for the management and disposal of potentially contaminated or contaminated soils displaced during drilling, construction, operation and maintenance of the remedy, and decommissioning and removal of IM-3 facilities. 3) The Waste Management Plan in an appendix of the Construction/Remedial Action Work Plan includes procedures for the management of wastes (other than soil) generated during construction and startup of the remedy. 4) IM-3 Decommissioning, Removal, and Restoration Work Plan, Section 5, Waste Management Plan and Recoverable Materials includes procedures for collection, characterization, storage, transportation, and disposal of wastes (other than soil) generated during the decommissioning and removal of IM-3 facilities.

TABLE L1.1-3
Summary of Compliance with Identified ARARs
Groundwater Remedy Basis of Design Report/Final (100%) Design
PG&E Topock Compressor Station, Needles, California

Item No.[1]	Category[1]	Citation[1,2]	Determination[1,2]	Description in DOI's ARARs Table[1,2]	Triggering Event	Compliance Responsibility	Which existing/ future document(s) will document continued compliance with this ARAR?[4]	Action (Compliance Status)			
								Preliminary (30%) Design	Intermediate (60%) Design	Pre-Final (90%)/Supplemental 90% Design	Final (100%) Design
79	California Action-Specific	Hazardous Waste Control Act (HWCA) - Standards applicable to generators of hazardous waste Title 22, CCR, Div 4.5, Ch 12, Article 3, §66262.34	ARAR Applicable	Requirements with respect to accumulation of waste on-site.	Accumulation of hazardous waste onsite	PG&E	O&M Plan, Construction/ Remedial Action Work Plan, Plan for Decommissioning and Removal of IM-3 Facility and Site Restoration; Plan for Decommissioning of Remedy Facilities and Restoration; Operations documents (e.g., manifests, inspection records)	PG&E will prepare an O&M Plan, a Construction/Remedial Action Work Plan, and a Plan for Decommissioning of IM-3 Facility prior to construction activities. These plans will describe waste management procedures. Hazardous waste generated onsite will meet the accumulation requirements of 22 CCR §66262.34.	Waste management is described in Section 6 of the O&M Plan (Volume 1), which is included in this BOD Report for the 60% design as Appendix L. Waste management will also be described in the Construction/Remedial Action Work Plan and the Plan for Decommissioning of the IM-3 Facility that will be submitted as part of the 90% design. Hazardous waste generated onsite will meet the accumulation requirements of 22 CCR §66262.34.	Waste management procedures (including accumulation requirements) are described in the following documents: 1) O&M Plan (Volume 1 of O&M Manual), Section 6, Waste Management Plan and Recoverable Materials, describes procedures for the collection, characterization, storage, transportation, and disposal of waste generated during operation and maintenance of the remedy. 2) Soil Management Plan (Volume 4 of O&M Manual), includes procedures and protocols for the management and disposal of potentially contaminated or contaminated soils displaced during drilling, construction, operation and maintenance of the remedy, and decommissioning and removal of IM-3 facilities. 3) The Waste Management Plan in an appendix of the Construction/Remedial Action Work Plan includes procedures for the management of wastes (other than soil) generated during construction and startup of the remedy. 4) IM-3 Decommissioning, Removal, and Restoration Work Plan, Section 5, Waste Management Plan and Recoverable Materials includes procedures for collection, characterization, storage, transportation, and disposal of wastes (other than soil) generated during the decommissioning and removal of IM-3 facilities.	Waste management procedures (including accumulation requirements) are described in the following documents: 1) O&M Plan (Volume 1 of O&M Manual), Section 6, Waste Management Plan and Recoverable Materials, describes procedures for the collection, characterization, storage, transportation, and disposal of waste generated during operation and maintenance of the remedy. 2) Soil Management Plan (Volume 4 of O&M Manual), includes procedures and protocols for the management and disposal of potentially contaminated or contaminated soils displaced during drilling, construction, operation and maintenance of the remedy, and decommissioning and removal of IM-3 facilities. 3) The Waste Management Plan in an appendix of the Construction/Remedial Action Work Plan includes procedures for the management of wastes (other than soil) generated during construction and startup of the remedy. 4) IM-3 Decommissioning, Removal, and Restoration Work Plan, Section 5, Waste Management Plan and Recoverable Materials includes procedures for collection, characterization, storage, transportation, and disposal of wastes (other than soil) generated during the decommissioning and removal of IM-3 facilities.

TABLE L1.1-3
Summary of Compliance with Identified ARARs
Groundwater Remedy Basis of Design Report/Final (100%) Design
PG&E Topock Compressor Station, Needles, California

Item No.[1]	Category[1]	Citation[1,2]	Determination[1,2]	Description in DOI's ARARs Table[1,2]	Triggering Event	Compliance Responsibility	Which existing/ future document(s) will document continued compliance with this ARAR?[4]	Action (Compliance Status)			
								Preliminary (30%) Design	Intermediate (60%) Design	Pre-Final (90%)/Supplemental 90% Design	Final (100%) Design
80	California Action-Specific	Hazardous Waste Control Act (HWCA) - Standards applicable to generators of hazardous waste Title 22, CCR, Div 4.5, Ch 12, Article 4, §66262.40, §66262.41	ARAR Applicable	Establishes requirements for record keeping of manifests, test results, waste analyses, and Biennial Reports. Any substantive requirements shall be attained.	Activity generating hazardous waste	PG&E	O&M Plan, Construction/ Remedial Action Work Plan, Plan for Decommissioning and Removal of IM-3 Facility and Site Restoration; Plan for Decommissioning of Remedy Facilities and Restoration, Operations documents (e.g., manifests, waste profiling records)	PG&E will prepare an O&M Plan, a Construction/Remedial Action Work Plan, and a Plan for Decommissioning of IM-3 Facility prior to construction activities. These plans will describe waste management procedures. Hazardous waste generated onsite will meet the recordkeeping requirements of 22 CCR §66262.40, §66262.41.	Waste management is described in Section 6 of the O&M Plan (Volume 1), which is included in this BOD Report for the 60% design as Appendix L. Waste management will also be described in the Construction/Remedial Action Work Plan and the Plan for Decommissioning of the IM-3 Facility that will be submitted as part of the 90% design. Hazardous waste generated onsite will meet the recordkeeping requirements of 22 CCR §66262.40, §66262.41.	Waste management procedures (including record keeping requirements) are described in the following documents: 1) O&M Plan (Volume 1 of O&M Manual), Section 6, Waste Management Plan and Recoverable Materials, describes procedures for the collection, characterization, storage, transportation, and disposal of waste generated during operation and maintenance of the remedy. 2) Soil Management Plan (Volume 4 of O&M Manual), includes procedures and protocols for the management and disposal of potentially contaminated or contaminated soils displaced during drilling, construction, operation and maintenance of the remedy, and decommissioning and removal of IM-3 facilities. 3) The Waste Management Plan in an appendix of the Construction/Remedial Action Work Plan includes procedures for the management of wastes (other than soil) generated during construction and startup of the remedy. 4) IM-3 Decommissioning, Removal, and Restoration Work Plan, Section 5, Waste Management Plan and Recoverable Materials includes procedures for collection, characterization, storage, transportation, and disposal of wastes (other than soil) generated during the decommissioning and removal of IM-3 facilities.	Waste management procedures (including record keeping requirements) are described in the following documents: 1) O&M Plan (Volume 1 of O&M Manual), Section 6, Waste Management Plan and Recoverable Materials, describes procedures for the collection, characterization, storage, transportation, and disposal of waste generated during operation and maintenance of the remedy. 2) Soil Management Plan (Volume 4 of O&M Manual), includes procedures and protocols for the management and disposal of potentially contaminated or contaminated soils displaced during drilling, construction, operation and maintenance of the remedy, and decommissioning and removal of IM-3 facilities. 3) The Waste Management Plan in an appendix of the Construction/Remedial Action Work Plan includes procedures for the management of wastes (other than soil) generated during construction and startup of the remedy. 4) IM-3 Decommissioning, Removal, and Restoration Work Plan, Section 5, Waste Management Plan and Recoverable Materials includes procedures for collection, characterization, storage, transportation, and disposal of wastes (other than soil) generated during the decommissioning and removal of IM-3 facilities.

TABLE L1.1-3
Summary of Compliance with Identified ARARs
Groundwater Remedy Basis of Design Report/Final (100%) Design
PG&E Topock Compressor Station, Needles, California

Item No.[1]	Category[1]	Citation[1,2]	Determination[1,2]	Description in DOI's ARARs Table[1,2]	Triggering Event	Compliance Responsibility	Which existing/ future document(s) will document continued compliance with this ARAR?[4]	Action (Compliance Status)			
								Preliminary (30%) Design	Intermediate (60%) Design	Pre-Final (90%)/Supplemental 90% Design	Final (100%) Design
81	California Action-Specific	Corrective Action - Title 22, CCR, Div 4.5, Ch 14, Article 6, §66264.100 (a) through (d), (f), (g)(1), and (h)	ARAR Relevant and Appropriate	The owner or operator is required to take corrective action under Title 22, CCR, §66264.91 to remediate releases from the regulated unit and to ensure that the regulated unit achieves compliance with the water quality protection standard. Substantive technical requirements are potentially relevant and appropriate for remedial action including groundwater monitoring.	Remedy implementation	PG&E	Not applicable. No further action required unless post-design approval change triggers.	PG&E will prepare an O&M Plan, a Construction/Remedial Action Work Plan, and a Plan for Decommissioning of IME Facility prior to construction activities. These plans will describe spill control and response procedures and will incorporate requirements of mitigation measure HAZ-1a, HAZ-1b, and HYDRO-1 for spill prevention, control, and cleanup during O&M, construction, and decommissioning activities.. In addition the O&M Plan will include a sampling and monitoring plan for groundwater.	The O&M Manual, which is included in this BOD Report for the 60% design as Appendix L, includes a Sampling and Monitoring Plan in Volume 2 to ensure that the regulated unit achieves compliance with the water quality protection standard, and a Contingency Plan in Volume 3 to address circumstances that may adversely affect the operation of the remedy.	The O&M Manual, which is included in the BOD Report for the 90% design as Appendix L, includes a Sampling and Monitoring Plan in Volume 2 to ensure that the regulated unit achieves compliance with the water quality protection standard, and a Contingency Plan in Volume 3 to address circumstances that may adversely affect the operation of the remedy.	DOI has determined that the specific regulations under this ARAR do not currently apply to the RCRA corrective action that is being conducted at the site (see RTC #393). Therefore, no further action is required.
82	California Action-Specific	Corrective Action for Waste Management Units -Title 22, CCR, Div 4.5, Ch 14, Article 6, §66264.101	ARAR Relevant and Appropriate	The owner or operator is required to take corrective action to remediate releases from any solid or hazardous waste management unit at the facility to protect public health and the environment. Substantive technical requirements are potentially relevant and appropriate for remedial action including groundwater monitoring.	Remedy implementation	PG&E	O&M Plan (sampling and monitoring plan, contingency plan), Progress Reports, Construction/ Remedial Action Completion Report	PG&E will prepare O&M Plan and a Construction/Remedial Action Work Plan. These plans will describe spill control and response procedures and will incorporate requirements of mitigation measure HAZ-1a, HAZ-1b, and HYDRO-1 for spill prevention, control, and cleanup during O&M and construction activities. In addition, the O&M Plan will include a sampling and monitoring plan for groundwater.	The O&M Manual, which is included in this BOD Report for the 60% design as Appendix L, includes a Sampling and Monitoring Plan in Volume 2 to ensure that the regulated unit achieves compliance with the water quality protection standard, and a Contingency Plan in Volume 3 to address circumstances that may adversely affect the operation of the remedy.	The O&M Manual, which is included in the BOD Report for the 90% design as Appendix L, includes a Sampling and Monitoring Plan in Volume 2 to ensure that the regulated unit achieves compliance with the water quality protection standard, and a Contingency Plan in Volume 3 to address circumstances that may adversely affect the operation of the remedy.	The O&M Manual, which is included in the Final BOD Report as Appendix L, includes a Sampling and Monitoring Plan in Volume 2 to ensure that the regulated unit achieves compliance with the water quality protection standard, and a Contingency Plan in Volume 3 to address circumstances that may adversely affect the operation of the remedy.
83	California Action-Specific	Closure and post-closure care -Title 22, CCR, Div 4.5, Ch 14, Article 7, §66264.111, §66264.112, §66264.115 through 120	ARAR Applicable	Owners and operators shall close a facility and perform post-closure care when contaminated subsurface soil cannot be practically removed or decontaminated. Contaminated soil, residues, or groundwater from remedial action at a site will achieve clean closure; otherwise, post-closure care requirements will be relevant and appropriate.	Decommissioning	PG&E	Not applicable. No further action required unless post-design approval change triggers.	PG&E will prepare a Decommissioning Plan for Remedy Facility and Site Restoration. Achievement of RAOs will be considered clean closure and that will remove any post-closure care obligations.	PG&E will prepare a Decommissioning Plan for Remedy Facility and Site Restoration that will be submitted prior to decommissioning. Achievement of RAOs will be considered clean closure and that will remove any post-closure care obligations.	The IM-3 Decommissioning, Removal, and Restoration Work Plan was prepared and is included in Appendix B of the CIMP and also as an appendix of the Construction/Remedial Action Work Plan. Achievement of RAOs will be considered clean closure and that will remove any post-closure care obligations. In compliance with the CD (Appendix C Scope of Work, Article 9), PG&E will prepare a site-specific Plan for Decommissioning and Restoration of remedy facilities within 120 days of DOI's certification of remedial action completion and a determination by DOI that removal of such facilities is	DOI has determined that the specific regulations under this ARAR do not currently apply to the RCRA corrective action that is being conducted at the site (see RTC #394). Therefore, no further action is required.

TABLE L1.1-3
Summary of Compliance with Identified ARARs
Groundwater Remedy Basis of Design Report/Final (100%) Design
PG&E Topock Compressor Station, Needles, California

Item No.[1]	Category[1]	Citation[1,2]	Determination[1,2]	Description in DOI's ARARs Table[1,2]	Triggering Event	Compliance Responsibility	Which existing/ future document(s) will document continued compliance with this ARAR?[4]	Action (Compliance Status)			
								Preliminary (30%) Design	Intermediate (60%) Design	Pre-Final (90%)/Supplemental 90% Design	Final (100%) Design
										protective of human health and the environment.	
84	California Action-Specific	Use and management of containers -Title 22, CCR, Div 4.5, Ch 14, Article 9	ARAR Applicable	Containers used for the transfer or storage of hazardous waste must be in good condition, compatible with the waste, kept closed except to add or remove materials and be inspected weekly. The area used to store the containers must provide adequate secondary containment and be designed with runoff controls. Also, appropriate closure of the containers must take place.	Design and management of hazardous waste containers	PG&E	Design Submittals; O&M Plan; Construction/ Remedial Action Work Plan.	PG&E will prepare an O&M Plan, and a Corrective Measure/Remedial Action Construction Work Plan. These plans will describe waste management procedures. Containers used to transfer, store or treat hazardous waste will comply with requirements in 22 CCR §66262.171-§66262.179.	Waste management is described in Section 6 of the O&M Plan (Volume 1), which is included in this BOD Report for the 60% design as Appendix L. Waste management will also be described in the Construction/Remedial Action Work Plan and the Plan for Decommissioning of the IM-3 Facility that will be submitted as part of the 90% design. Containers used to transfer, store or treat hazardous waste will comply with requirements in 22 CCR §66262.171-§66262.179.	Waste management procedures (including containers requirements) are described in the following documents: 1) O&M Plan (Volume 1 of O&M Manual), Section 6, Waste Management Plan and Recoverable Materials, describes procedures for the collection, characterization, storage, transportation, and disposal of waste generated during operation and maintenance of the remedy. 2) Soil Management Plan (Volume 4 of O&M Manual), includes procedures and protocols for the management and disposal of potentially contaminated or contaminated soils displaced during drilling, construction, operation and maintenance of the remedy, and decommissioning and removal of IM-3 facilities. 3) The Waste Management Plan in an appendix of the Construction/Remedial Action Work Plan includes procedures for the management of wastes (other than soil) generated during construction and startup of the remedy. 4) IM-3 Decommissioning, Removal, and Restoration Work Plan, Section 5, Waste Management Plan and Recoverable Materials includes procedures for collection, characterization, storage, transportation, and disposal of wastes (other than soil) generated during the decommissioning and removal of IM-3 facilities.	Waste management procedures (including containers requirements) are described in the following documents: 1) O&M Plan (Volume 1 of O&M Manual), Section 6, Waste Management Plan and Recoverable Materials, describes procedures for the collection, characterization, storage, transportation, and disposal of waste generated during operation and maintenance of the remedy. 2) Soil Management Plan (Volume 4 of O&M Manual), includes procedures and protocols for the management and disposal of potentially contaminated or contaminated soils displaced during drilling, construction, operation and maintenance of the remedy, and decommissioning and removal of IM-3 facilities. 3) The Waste Management Plan in an appendix of the Construction/Remedial Action Work Plan includes procedures for the management of wastes (other than soil) generated during construction and startup of the remedy. 4) IM-3 Decommissioning, Removal, and Restoration Work Plan, Section 5, Waste Management Plan and Recoverable Materials includes procedures for collection, characterization, storage, transportation, and disposal of wastes (other than soil) generated during the decommissioning and removal of IM-3 facilities.

TABLE L1.1-3
Summary of Compliance with Identified ARARs
Groundwater Remedy Basis of Design Report/Final (100%) Design
PG&E Topock Compressor Station, Needles, California

Item No.[1]	Category[1]	Citation[1,2]	Determination[1,2]	Description in DOI's ARARs Table[1,2]	Triggering Event	Compliance Responsibility	Which existing/ future document(s) will document continued compliance with this ARAR?[4]	Action (Compliance Status)			
								Preliminary (30%) Design	Intermediate (60%) Design	Pre-Final (90%)/Supplemental 90% Design	Final (100%) Design
85	California Action-Specific	Tank systems - Title 22, CCR, Div 4.5, Ch 14, Article 10	ARAR Applicable	The remedial activities may involve storage and/or treatment in tanks. These tanks are required to have secondary containment, be monitored and inspected, be provided with overfill and spill protection controls, and operated with adequate freeboard. Also, appropriate closure must take place.	During project design, operation and maintenance activities where tank systems are used to transfer, store or treat hazardous waste	PG&E	Design Submittals; O&M Plan	PG&E will prepare O&M Plan, and Corrective Measure/Remedial Action Construction Work Plan. Tank systems used to transfer, store or treat hazardous waste will comply with requirements in 22 CCR §66262.192-§66262.195.	At the 60% design stage, there is no transfer, storage and/or treatment of hazardous waste in tank systems.	At the 90% design stage, there are two design elements that could trigger compliance with this ARAR: **Sampling Purge Water Holding Tank in MW-20 Bench Carbon Amendment Building** If the purge water or decon pad water accumulated in this tank exhibits hazardous waste characteristics, the water tank and any ancillary equipment handling hazardous waste will comply with the requirements for hazardous waste tank systems. It will be labeled as a hazardous waste tank, be equipped with secondary containment and overfill prevention controls, daily inspections will be performed and documented, and an engineer's assessment of the tank system's integrity will be performed. **Portable Treatment Unit for Well Rehabilitation at Well Head** Treatment of well rehabilitation water with a pH below 2.0 at the well head may be performed in a portable treatment unit that is subject to the requirements for a fixed treatment unit (FTU) operating under the Conditional Authorization permit tier if it operates entirely onsite, or to the requirements for a transportable treatment unit (TTU) operating under the Permit By Rule permit tier if it operates at multiple sites. If the treatment unit includes tanks that accumulate or treat waste with hazardous characteristics, the tanks and any ancillary equipment that handles hazardous waste will	At the final design stage, there are two design elements that could trigger compliance with this ARAR: **Sampling Purge Water Holding Tank in MW-20 Bench Carbon Amendment Building** If the purge water or decon pad water accumulated in this tank exhibits hazardous waste characteristics, the water tank and any ancillary equipment handling hazardous waste will comply with the requirements for hazardous waste tank systems. It will be labeled as a hazardous waste tank, be equipped with secondary containment and overfill prevention controls, daily inspections will be performed and documented, and an engineer's assessment of the tank system's integrity will be performed. **Portable Treatment Unit for Well Rehabilitation at Well Head** Treatment of well rehabilitation water with a pH below 2.0 at the well head may be performed in a portable treatment unit that is subject to the requirements for a fixed treatment unit (FTU) operating under the Conditional Authorization permit tier if it operates entirely onsite, or to the requirements for a transportable treatment unit (TTU) operating under the Permit By Rule permit tier if it operates at multiple sites. If the treatment unit includes tanks that accumulate or treat waste with hazardous characteristics, the tanks and any ancillary equipment that

TABLE L1.1-3
Summary of Compliance with Identified ARARs
Groundwater Remedy Basis of Design Report/Final (100%) Design
PG&E Topock Compressor Station, Needles, California

Item No.[1]	Category[1]	Citation[1,2]	Determination[1,2]	Description in DOI's ARARs Table[1,2]	Triggering Event	Compliance Responsibility	Which existing/ future document(s) will document continued compliance with this ARAR?[4]	Action (Compliance Status)			
								Preliminary (30%) Design	Intermediate (60%) Design	Pre-Final (90%)/Supplemental 90% Design	Final (100%) Design
										comply with the requirements for hazardous waste tank systems, including labeling, having secondary containment and overfill prevention controls, being subject to documented daily inspections, and having an engineer's assessment of the tank system's integrity performed. If the treatment unit operates as a TTU, compliance will be the obligation of the TTU owner.	handles hazardous waste will comply with the requirements for hazardous waste tank systems, including labeling, having secondary containment and overfill prevention controls, being subject to documented daily inspections, and having an engineer's assessment of the tank system's integrity performed. If the treatment unit operates as a TTU, compliance will be the obligation of the TTU owner.
86	California Action-Specific	Waste piles - Title 22, CCR, Div 4.5, Ch 14, Article 12	ARAR Applicable	The waste piles should be placed upon a lined foundation or base with a leachate system, protected from precipitation and wind dispersal, designed to prevent run on and run off. Also, closure and post-closure care requirements. Remedial action may involve soil excavation and the compiling of soil in a temporary waste pile. This requirement is applicable if the excavated waste meets RCRA hazardous waste criteria.	Under broad application, a triggering event could be any temporary stockpiling of haz soil	PG&E	Soil Management Plan (Volume 4 of O&M Manual)	PG&E will prepare a Soil Management Plan in conformance with EIR mitigation measures HAZ-2 and HAZ-2f to describe management procedures in the event that evidence of contaminated soil is identified during ground disturbing activities (e.g., noxious odors, discolored soil). It is not anticipated that regulated waste piles will be constructed.	A Soil Management Plan is included in Volume 4 of the O&M Manual as part of the 60% design. In conformance with EIR mitigation measures HAZ-2 and HAZ-2f, the Soil Management Plan describes management procedures in the event that evidence of contaminated soil is identified during ground disturbing activities (e.g., noxious odors, discolored soil). It is not anticipated that long-term storage of soil requiring construction of a waste pile meeting Chapter 14, Article 12 requirements for soil exhibiting RCRA hazardous waste characteristics will occur. If necessary to facilitate characterization or staging for offsite transportation, RCRA and non-RCRA hazardous waste soil will be temporarily accumulated in a staging pile that meets the design standards specified in California Health and Safety Code Section 25123.3 for up to 90 days prior to transportation to a permitted offsite disposal facility.	A Soil Management Plan is included in Volume 4 of the O&M Manual as part of the 90% design. In conformance with EIR mitigation measures HAZ-2 and HAZ-2f, the Soil Management Plan describes management procedures in the event that evidence of contaminated soil is identified during ground disturbing activities (e.g., noxious odors, discolored soil). It is not anticipated that long-term storage of soil requiring construction of a waste pile meeting Chapter 14, Article 12 requirements for soil exhibiting RCRA hazardous waste characteristics will occur. If necessary to facilitate characterization or staging for offsite transportation, RCRA and non-RCRA hazardous waste soil will be temporarily accumulated in a staging pile that meets the design standards specified in California Health and Safety Code Section 25123.3 for up to 90 days prior to transportation to a permitted offsite disposal facility.	A Soil Management Plan is included in Volume 4 of the O&M Manual as part of the final design. In conformance with EIR mitigation measures HAZ-2 and HAZ-2f, the Soil Management Plan describes management procedures in the event that evidence of contaminated soil is identified during ground disturbing activities (e.g., noxious odors, discolored soil). Long-term storage of soil requiring construction of a waste pile meeting Chapter 14, Article 12 requirements for soil exhibiting RCRA hazardous waste characteristics will not occur. If necessary to facilitate characterization or staging for offsite transportation, RCRA and non-RCRA hazardous waste soil will be temporarily accumulated in a staging pile that meets the design standards specified in California Health and Safety Code Section 25123.3 for up to 90 days prior to transportation to a permitted offsite disposal facility.
87	California Action-Specific	Landfills - Title 22, CCR, Div 4.5, Ch 14, Article 14	ARAR Relevant and Appropriate	The requirements for landfills include the design and operation, action	Design, construct, O&M, and closure of landfills	PG&E	N/A. No further action required unless post-design	No further action is required. The preliminary (30%) design does not include construction of a landfill.	No further action is required. The 60% design does not include construction of a landfill.	No further action is required. The 90% design does not	No further action is required. The final design does not

TABLE L1.1-3
Summary of Compliance with Identified ARARs
Groundwater Remedy Basis of Design Report/Final (100%) Design
PG&E Topock Compressor Station, Needles, California

Item No.[1]	Category[1]	Citation[1,2]	Determination[1,2]	Description in DOI's ARARs Table[1,2]	Triggering Event	Compliance Responsibility	Which existing/ future document(s) will document continued compliance with this ARAR?[4]	Action (Compliance Status)			
								Preliminary (30%) Design	Intermediate (60%) Design	Pre-Final (90%)/Supplemental 90% Design	Final (100%) Design
				leakage rate, monitoring and inspection, response actions, surveying and recordkeeping and closure and post-closure care.	(66260.10 defines "Landfill" as a disposal facility or part of a facility where hazardous waste is placed in or on land and which is not a pile, a land treatment facility, a surface impoundment, an underground injection well, a salt dome formation, a salt bed formation, an underground mine, a cave, or a corrective action management unit.)		approval change triggers.			include construction of a landfill.	include construction of a landfill.
88	California Action-Specific	Miscellaneous Units - Title 22, CCR, Div 4.5, Ch 14, Article 16	ARAR Applicable	Applies to waste management unit not otherwise regulated under RCRA. It may include pumps, auxiliary equipment, air strippers, etc. The substantive requirements include design, construction, operation, maintenance and closure of the unit that will ensure protection of human health and the environment. The actions include general inspections for safety and operation efficiency, testing and maintenance of the equipment (including testing of warning systems). Applicable if pumps are used for extraction and treatment of leachate that meets RCRA hazardous waste criteria.	Design, construct, O&M, and closure of waste management units not otherwise regulated under RCRA	PG&E	Design Submittals; O&M Plan; Construction/ Remedial Action Work Plan	No further action is required. The preliminary (30%) design assumes that the only pumps used for extraction of groundwater meeting RCRA hazardous waste criteria are submersible well pumps in the IRZ wells along National Trails Highway.	No further action is required. The 60% design assumes that the only pumps used for extraction of groundwater meeting RCRA hazardous waste criteria are submersible well pumps in the IRZ wells along National Trails Highway.	No further action is required. The 90% design assumes that the only pumps used for extraction of groundwater meeting RCRA hazardous waste criteria are submersible well pumps in the IRZ wells along National Trails Highway.	No further action is required. The final design assumes that the only pumps used for extraction of groundwater meeting RCRA hazardous waste criteria are submersible well pumps in the IRZ wells along National Trails Highway.

TABLE L1.1-3
Summary of Compliance with Identified ARARs
Groundwater Remedy Basis of Design Report/Final (100%) Design
PG&E Topock Compressor Station, Needles, California

Item No.[1]	Category[1]	Citation[1,2]	Determination[1,2]	Description in DOI's ARARs Table[1,2]	Triggering Event	Compliance Responsibility	Which existing/ future document(s) will document continued compliance with this ARAR?[4]	Action (Compliance Status)			
								Preliminary (30%) Design	Intermediate (60%) Design	Pre-Final (90%)/Supplemental 90% Design	Final (100%) Design
89	California Action-Specific	Land Disposal Restrictions (LDR) for RCRA wastes and non-RCRA wastes -Title 22, CCR, Div 4.5, Ch 18, Articles 1, 3, 4, 10, 11	ARAR Applicable	Movement of hazardous waste to new locations and placed in or on land will trigger LDR. General applicability, dilution prohibited, waste analysis and record keeping, and special rules apply for wastes that exhibit a characteristic waste. Best Demonstrated Available Technology (BDA) standards for each hazardous constituent in each listed waste, if residual is to be disposed. Utilize treatment standards table when necessary. Where applicable, hazardous waste generated from remedial activities must comply with LDR and meet the treatment standards or notify the disposal facility of the treatment standards before disposal at an appropriate offsite disposal facility.	Activity that generates hazardous waste	PG&E	O&M Plan, Construction/ Remedial Action Work Plan; Plan for Decommissioning and Removal of IM-3 Facility and Site Restoration; Plan for Decommissioning of Remedy Facilities and Restoration	PG&E will prepare an O&M Plan, a Construction/Remedial Action Work Plan, and a Plan for Decommissioning of IM-3 Facility prior to construction activities. These plans will describe waste management procedures during construction, operation, and decommissioning. The remedy is not expected to involve onsite placement of hazardous waste that will trigger the LDR requirements. Hazardous waste generated will be characterized to determine if LDR treatment standards are exceeded. A notification will be submitted to the disposal facility indicating whether the waste is restricted from land disposal and whether it exceeds an applicable treatment standard.	Waste management is described in Section 6 of the O&M Plan (Volume 1), which is included in this BOD Report for the 60% design as Appendix L. Waste management will also be described in the Construction/ Remedial Action Work Plan and the Plan for Decommissioning of the IM-3 Facility that will be submitted as part of the 90% design. The remedy is not expected to involve onsite placement of hazardous waste that will trigger the LDR requirements. Hazardous waste generated will be characterized to determine if LDR treatment standards are exceeded. A notification will be submitted to the disposal facility indicating whether the waste is restricted from land disposal and whether it exceeds an applicable treatment standard.	Waste management is described in Section 6 of the O&M Plan (Volume 1), which is included in this BOD Report for the 90% design as Appendix L. Waste management is also be described in the Construction/Remedial Action Work Plan and the Plan for Decommissioning of the IM-3 Facility that was submitted as part of the 90% design. The remedy is not expected to involve onsite placement of hazardous waste that will trigger the LDR requirements. Hazardous waste generated will be characterized to determine if LDR treatment standards are exceeded. A notification will be submitted to the disposal facility indicating whether the waste is restricted from land disposal and whether it exceeds an applicable treatment standard.	Waste management is described in Section 6 of the O&M Plan (Volume 1 of the O&M Manual), which is included in this BOD Report as Appendix L. Waste management is also described in the Construction/Remedial Action Work Plan and the Plan for Decommissioning of the IM-3 Facility that was submitted as part of the final design. The remedy is not expected to involve onsite placement of hazardous waste that will trigger the LDR requirements. Hazardous waste generated will be characterized to determine if LDR treatment standards are exceeded. A notification will be submitted to the disposal facility indicating whether the waste is restricted from land disposal and whether it exceeds an applicable treatment standard.
90	California Action-Specific	Hazardous Waste Control Act (HWCA) - Standards for owners and operators of hazardous waste transfer and TSD facilities, Title 22, CCR, Div 4.5, Ch 14, Articles 3 and 4	ARAR Applicable	Establish requirements for a facility to plan for emergency conditions. In addition, the design and operation of the facility must be done to prevent releases. Other requirements include testing and maintenance of equipment and incorporation of communication and alarm systems and contingency plan. The requirements may be applicable if CERCLA response action includes treatment, storage, or disposal as defined under RCRA, or may be relevant and appropriate if the requirements address problems or situations sufficiently similar to the specific circumstances at the	Design, construction, operation and maintenance of the remedy	PG&E	Design submittals; Project-specific HMBP; O&M Plan; Construction/ Remedial Action Work Plan	PG&E will prepare a Project-specific HMBP; an O&M Plan; and a Construction/Remedial Action Work Plan that will address procedures for emergencies.	The Contingency Plan (Volume 3) of the O&M Manual includes contingency planning for potential failure modes (including large releases), assess and mitigate risks, and prioritize risk management in order to prevent problems before they arise. The O&M Plan (Volume 1) of the O&M Manual covers routine O&M activities which includes testing and maintenance of communication and alarm. Project-specific HMBP and a Construction/Remedial Action Work Plan will address procedures for emergencies. The outline for the HMBP is presented in Appendix F of the O&M Plan, which is included in the 60% design. The complete HMBP and Construction/Remedial Action Work Plan will be included in the 90% design.	The Contingency Plan (Volume 3) of the O&M Manual includes contingency planning for potential failure modes (including large releases), assessing and mitigating risks, and prioritizing risk management in order to prevent problems before they arise. The O&M Plan (Volume 1) of the O&M Manual covers routine O&M activities which includes testing and maintenance of communication and alarm systems. Section 5 of the Construction/Remedial Action Work Plan includes contingency planning for failure modes during construction (including large releases), assess and mitigate risks, and prioritize risk	The Contingency Plan (Volume 3) of the O&M Manual includes contingency planning for potential failure modes (including large releases), assessing and mitigating risks, and prioritizing risk management in order to prevent problems before they arise. The O&M Plan (Volume 1) of the O&M Manual covers routine O&M activities which includes testing and maintenance of communication and alarm systems. Section 5 of the Construction/ Remedial Action Work Plan includes contingency planning for failure modes during construction (including large releases), assessing and mitigating risks, and prioritizing risk management in order to

TABLE L1.1-3
Summary of Compliance with Identified ARARs
Groundwater Remedy Basis of Design Report/Final (100%) Design
PG&E Topock Compressor Station, Needles, California

Item No.[1]	Category[1]	Citation[1,2]	Determination[1,2]	Description in DOI's ARARs Table[1,2]	Triggering Event	Compliance Responsibility	Which existing/ future document(s) will document continued compliance with this ARAR?[4]	Action (Compliance Status)			
								Preliminary (30%) Design	Intermediate (60%) Design	Pre-Final (90%)/Supplemental 90% Design	Final (100%) Design
				site that their usage will be well suited.						management in order to prevent problems before they arise. The project-specific HMBP (Appendix F of the O&M Plan) also addresses procedures for emergencies. Communication protocols including contacts and notification in emergency conditions are presented in Exhibit L2.2-1 of the O&M Manual, Table 2.3-1 of the Construction/Remedial Action Work Plan, and the HMBP.	prevent problems before they arise. The project-specific HMBP (Appendix F of the O&M Plan) also addresses procedures for emergencies. Communication protocols including contacts and notification in emergency conditions are presented in Exhibit L2.2-1 of the O&M Manual, Table 2.3-1 of the Construction/Remedial Action Work Plan, and the HMBP.
91	California Action-Specific	Hazardous Waste Control Act (HWCA) - Groundwater monitoring and response, Title 22, CCR, Div 4.5, Ch 14, Article 6, §66264.91 (a) and (c)	ARAR Relevant and Appropriate	Owners or operators of a RCRA surface impoundment, waste pile, land treatment unit, or landfill shall conduct a monitoring and response program for each regulated unit. Substantive technical requirements are potentially relevant and appropriate for remedial action including groundwater monitoring.	Design, construction, operation and maintenance of the remedy	PG&E	No further action required unless post-design approval change triggers.	PG&E will prepare a project-specific HMBP; an O&M Plan (include sampling and monitoring plan); and a Construction/Remedial Action Work Plan. The preliminary (30%) design does not include regulated units.	PG&E will prepare a project-specific HMBP; an O&M Manual (including a sampling and monitoring plan); and a Construction/Remedial Action Work Plan. The O&M Manual, which includes a sampling and monitoring plan for groundwater and surface water, is included as Appendix L in this BOD Report for the 60% design. The outline for the HMBP is presented in Appendix F of the O&M Plan, which is included in the 60% design. The complete HMBP and Construction/Remedial Action Work Plan will be included in the 90% design. Although the 60% design does not include regulated units, these plans present a monitoring and response program that is functionally equivalent and will provide a level of protection to water quality equivalent to the cited requirement.	Although the 90% design does not include regulated units, the following plans present a monitoring and response program that is functionally equivalent and will provide a level of protection to water quality equivalent to the cited requirement: 1) Appendix E of the O&M Plan (Volume 1 of the O&M Manual) includes an industrial SWPPP that involves BMPs designed to reduce pollutants in discharges that may affect receiving water quality during operations and maintenance of the remedy. 2) Volume 2 of the O&M Manual includes a sampling and monitoring plan for groundwater and surface water. 3) The Construction/Remedial Action Work Plan includes a BMP Plan for construction activities that involves visual inspections and monitoring and sampling for purposes of ensuring the protection of receiving water quality. 4) The project-specific HMBP addresses procedures for emergencies.	DOI has determined that the specific regulations under this ARAR do not currently apply to the RCRA corrective action that is being conducted at the site (see RTC #393). Therefore, no further action is required.

TABLE L1.1-3
Summary of Compliance with Identified ARARs
Groundwater Remedy Basis of Design Report/Final (100%) Design
PG&E Topock Compressor Station, Needles, California

Item No.[1]	Category[1]	Citation[1,2]	Determination[1,2]	Description in DOI's ARARs Table[1,2]	Triggering Event	Compliance Responsibility	Which existing/ future document(s) will document continued compliance with this ARAR?[4]	Action (Compliance Status)			
								Preliminary (30%) Design	Intermediate (60%) Design	Pre-Final (90%)/Supplemental 90% Design	Final (100%) Design
92	California Action-Specific	Hazardous Waste Control Act (HWCA) - Monitoring, Title 22, CCR, Div 4.5, Ch 14, Article 6, §66264.97 (b), (c), (d) and (e)(1) through (e)(5)	ARAR Relevant and Appropriate	Requirements for monitoring groundwater, surface water, and vadose zone. Substantive technical requirements are potentially relevant and appropriate for remedial action including groundwater monitoring.	Design, operation and maintenance of the remedy	PG&E	No further action required unless post-design approval change triggers.	PG&E will prepare an O&M Plan and Progress Reports. The O&M Plan will include a sampling and monitoring plan for groundwater and surface water.	The O&M Manual, which includes a sampling and monitoring plan for groundwater and surface water, is included as Appendix L in this BOD Report for the 60% design. PG&E will prepare Progress Reports that presents the results and analysis of monitoring data.	The O&M Manual, which includes a sampling and monitoring plan for groundwater and surface water, is included as Appendix L in the BOD Report for the 90% design. PG&E will prepare quarterly Progress Reports that presents the results and analysis of monitoring data.	DOI has determined that the specific regulations under this ARAR do not currently apply to the RCRA corrective action that is being conducted at the site (see RTC #393). Therefore, no further action is required.
93	California Action-Specific	Hazardous Waste Control Act (HWCA) - Detection Monitoring Title 22, CCR, Div 4.5, Ch 14, Article 6, §66264.98	ARAR Relevant and Appropriate	Requires the owner or operator of a regulated unit to develop a detection monitoring program that will provide reliable indication of a release. Substantive technical requirements are potentially relevant and appropriate for remedial action including groundwater monitoring.	Design, operation and maintenance of the remedy	PG&E	No further action required unless post-design approval change triggers.	PG&E will prepare an O&M Plan and Progress Reports. The O&M Plan will include a sampling and monitoring plan for groundwater and surface water that provides a level of protection equivalent to a detection monitoring program that will provide reliable indication of a release	PG&E will prepare an O&M Manual and Progress Reports. The O&M Manual, which includes a sampling and monitoring plan for groundwater and surface water, is included as Appendix L in this BOD Report for the 60% design. Although the 60% design does not include regulated units, the programs described in these documents provide a level of protection equivalent to a detection monitoring program that will provide reliable indication of a release.	Although the 90% design does not include regulated units, the programs described in the sampling and monitoring plan for groundwater and surface water (Volume 2 of the O&M Manual) and future quarterly progress reports provide a level of protection equivalent to a detection monitoring program that will provide reliable indication of a release.	DOI has determined that the specific regulations under this ARAR do not currently apply to the RCRA corrective action that is being conducted at the site (see RTC #393). Therefore, no further action is required.
94	California Action-Specific	Hazardous Waste Control Act (HWCA) - Evaluation Monitoring, Title 22, CCR, Div 4.5, Ch 14, Article 6, §66264.99	ARAR Relevant and Appropriate	Requires the owner or operator of a regulated unit to develop an evaluation monitoring program that can be used to assess the nature and extent of a release from the unit. Substantive technical requirements are potentially relevant and appropriate for remedial action including groundwater monitoring.	Design, operation and maintenance of the remedy	PG&E	No further action required unless post-design approval change triggers.	PG&E will prepare an O&M Plan and Progress Reports. The O&M Plan will include a sampling and monitoring plan for groundwater and surface water that provides a level of protection equivalent to an evaluation monitoring program, based on site-specific conditions.	PG&E will prepare an O&M Plan and Progress Reports. Reports. The O&M Manual, which includes a sampling and monitoring plan for groundwater and surface water, is included as Appendix L in this BOD Report for the 60% design. Although the 60% design does not include regulated units, the programs described in these documents provide a level of protection equivalent to an evaluation monitoring program, based on site-specific conditions.	Although the 90% design does not include regulated units, the programs described in the sampling and monitoring plan for groundwater and surface water (Volume 2 of the O&M Manual) and future quarterly progress reports provide a level of protection equivalent to an evaluation monitoring program, based on site-specific conditions.	DOI has determined that the specific regulations under this ARAR do not currently apply to the RCRA corrective action that is being conducted at the site (see RTC #393). Therefore, no further action is required.

TABLE L1.1-3
Summary of Compliance with Identified ARARs
Groundwater Remedy Basis of Design Report/Final (100%) Design
PG&E Topock Compressor Station, Needles, California

Item No.[1]	Category[1]	Citation[1,2]	Determination[1,2]	Description in DOI's ARARs Table[1,2]	Triggering Event	Compliance Responsibility	Which existing/ future document(s) will document continued compliance with this ARAR?[4]	Action (Compliance Status)			
								Preliminary (30%) Design	Intermediate (60%) Design	Pre-Final (90%)/Supplemental 90% Design	Final (100%) Design
95	California Action-Specific	Discharges of Waste to Land - Title 23 CCR, Div 3, Ch 15	ARAR Relevant and Appropriate	The regulations in this chapter pertain to water quality aspects of hazardous waste discharge to land, establishing waste and site classifications and waste management requirements for waste treatment, storage, or disposal in landfills, surface impoundments, waste piles, and land treatment facilities. Requirements in this chapter are minimum standards for proper management of each waste category. Pursuant to Section 2511 (Exemptions), because this remediation constitutes actions taken by public agencies to cleanup unauthorized releases of waste, these regulations will only apply if the proposed remedial activities include (1) removal of waste from the immediate place of release, or (2) keeping some contamination in place.	Activities involve (1) removal of waste from the immediate place of release, or (2) keeping some contamination in place.	PG&E	N/A. No further action required unless post-design approval change triggers.	No further action is required. The remedy design does not involve removal of waste from the immediate place of release and is not designed to keep some contamination in place.	No further action is required. The remedy design does not involve removal of waste from the immediate place of release and is not designed to keep some contamination in place.	No further action is required. The remedy design does not involve removal of waste from the immediate place of release and is not designed to keep some contamination in place.	No further action is required. The remedy design does not involve removal of waste from the immediate place of release and is not designed to keep some contamination in place.
96	California Action-Specific	Consolidated Regulations for Storage, Treatment, Processing, or Disposal of Solid Waste - Title 27 CCR, Div 2, Subdivision 1	ARAR Relevant and Appropriate	The regulations in this subdivision (promulgated by the State Water Resources Control Board (SWRCB)) pertain to water quality aspects of discharges of solid waste to land for treatment, storage, or disposal. Pursuant to Section 20090 (Exemptions), because this remediation constitutes actions taken by public agencies to cleanup unauthorized releases of waste, these regulations will only apply if the proposed remedial activities include (1) removal of waste from the immediate place of release, or (2) keeping some contamination in place.	Activities involve (1) removal of waste from the immediate place of release, or (2) keeping some contamination in place.	PG&E	N/A. No further action required unless post-design approval change triggers.	No further action is required. The remedy design does not involve removal of waste from the immediate place of release and is not designed to keep some contamination in place.	No further action is required. The remedy design does not involve removal of waste from the immediate place of release and is not designed to keep some contamination in place.	No further action is required. The remedy design does not involve removal of waste from the immediate place of release and is not designed to keep some contamination in place.	No further action is required. The remedy design does not involve removal of waste from the immediate place of release and is not designed to keep some contamination in place.

TABLE L1.1-3
Summary of Compliance with Identified ARARs
Groundwater Remedy Basis of Design Report/Final (100%) Design
PG&E Topock Compressor Station, Needles, California

Item No.[1]	Category[1]	Citation[1,2]	Determination[1,2]	Description in DOI's ARARs Table[1,2]	Triggering Event	Compliance Responsibility	Which existing/ future document(s) will document continued compliance with this ARAR?[4]	Action (Compliance Status)			
								Preliminary (30%) Design	Intermediate (60%) Design	Pre-Final (90%)/Supplemental 90% Design	Final (100%) Design
97	California Action-Specific	Requirements for land-use covenants - Cal. Code Regs. Title 22, § 67391.1	ARAR Applicable	This regulation requires appropriate restrictions on use of property in the event that a proposed remedial alternative results in hazardous materials remaining at the property at levels which are not suitable for unrestricted use of the land. This is an ARAR with respect to PG&E-owned land at the Topock site.	A decision document finding that hazardous materials, hazardous wastes or constituents, or hazardous substances will remain at the property at levels which are not suitable for unrestricted use of the land.	DTSC	A land use covenant imposing appropriate limitations on land use shall be executed and recorded when hazardous materials, hazardous wastes or constituents, or hazardous substances will remain at the property at levels which are not suitable for unrestricted use of the land. The land use restrictions must be clearly stated in any response action decision document approved by DTSC. The following information must be specified: (1) the limitations or controls that will be incorporated into an appropriate land use covenant and (2) a description of the implementation and enforcement provisions, including but not limited to frequency of inspections and reporting requirements, necessary to ensure the integrity and long-term protectiveness of the land use covenant.	The final groundwater remedy includes restrictions on use of the groundwater for potable use, based on the conclusions of the groundwater risk assessment. The land use covenants (institutional controls) are described in Section 5.0.	The final groundwater remedy includes restrictions on use of the groundwater for potable use. The land use covenants (institutional controls) are described in Section 5.0 of the 60% BOD Report.	The final groundwater remedy includes restrictions on use of the groundwater for potable use. The land use covenants (institutional controls) are described in Section 5.0 of the 90% BOD Report.	The final groundwater remedy includes restrictions on use of the groundwater for potable use. The land use covenants (institutional controls) are described in Section 5.0 of the Final BOD Report.

TABLE L1.1-3
Summary of Compliance with Identified ARARs
Groundwater Remedy Basis of Design Report/Final (100%) Design
PG&E Topock Compressor Station, Needles, California

Item No.[1]	Category[1]	Citation[1,2]	Determination[1,2]	Description in DOI's ARARs Table[1,2]	Triggering Event	Compliance Responsibility	Which existing/ future document(s) will document continued compliance with this ARAR?[4]	Action (Compliance Status)			
								Preliminary (30%) Design	Intermediate (60%) Design	Pre-Final (90%)/Supplemental 90% Design	Final (100%) Design
98	California Action-Specific	California Water Code - Section 1380[c], California Well Standards, Bulletin 74-90 (Supplement to Bulletin 74-81)	ARAR Applicable	These standards for water, cathodic, and monitoring wells will be applicable if the remediation requires use of such wells.	Design, construction, decommission of groundwater wells	PG&E	Design submittals, Construction/ Remedial Action Work Plan, Plan for Decommissioning of IM-3 Facility and Site Restoration, Plan for Decommissioning of Remedy Facilities and Restoration.	PG&E will prepare Design submittals, a Construction/Remedial Action Work Plan, Plan for Decommissioning of IM-3 Facility and Site Restoration, and a Decommissioning Plan for Remedy Facility and Site Restoration. The remedy will include water and monitoring wells, and will adhere to the standards specified in this ARAR. Well construction and decommissioning standards will be described in the Construction /Remedial Action Work Plan.	The remedy includes water and monitoring wells, and will adhere to the standards specified in this ARAR. Note that the general approach for well decommissioning is currently being developed by a subgroup that includes PG&E, DTSC, DOI, and Interested Tribes. Protocols for well decommissioning will be based on this general approach and be presented in Appendix B of the O&M Plan (Volume 1 of the O&M Manual), at the 90% design stage. Well construction and decommissioning standards will also be described the Construction/Remedial Action Work Plan.	The remedy includes water and monitoring wells, and will adhere to the standards specified in this ARAR. An approach for well decommissioning has been developed by a subgroup that includes PG&E, DTSC, DOI, and Interested Tribes. Protocols for well decommissioning developed based on this approach, are presented in the O&M Plan (Volume 1 of the O&M Manual). Well construction and decommissioning procedures are also described in the Construction/Remedial Action Work Plan.	The remedy includes water and monitoring wells, and will adhere to the standards specified in this ARAR. An approach for well decommissioning has been developed by a subgroup that includes PG&E, DTSC, DOI, and Interested Tribes. Protocols for well decommissioning developed based on this approach are presented in the O&M Plan (Volume 1 of the O&M Manual). Well construction and decommissioning procedures are also described in the Construction/Remedial Action Work Plan.
99	California Action-Specific	State Water Resources Control Board Resolution No. 88-63 Adoption of Policy Entitled “Sources of Drinking Water”	ARAR Applicable	With certain exceptions, all surface and ground waters of the State of California are to be considered suitable, or potentially suitable, for municipal or domestic water supply. The Regional Water Quality Control Board and State Water Resources Board have designated the beneficial use of the ground and surface waters in the Topock Site area as “municipal and domestic water supply.” This designation is set forth in the Basin Plan.	Remedy implementation	PG&E	O&M Plan (sampling and monitoring plan, contingency plan), Progress Reports, Corrective Measure/Remedial Action Completion Report	Compliance with this requirement will be achieved by reducing the concentration of Cr(T) in the affected aquifer to a concentration below the federal and state MCLs of 100 µg/L and 50 mg/L respectively which represent the chemical concentrations in drinking water considered safe for human consumption. There are no MCLs or MCLGs for Cr(VI) and the RAO has been established based on the regional background concentration of 32 µg/L Cr(VI) at the conclusion of remedy implementation. The establishment of RAOs (see Section 1.2.1) is based on the conclusions of the groundwater risk assessment which assumed a hypothetical future use of groundwater within the plume as a drinking water supply. The final groundwater remedy includes an institutional control to restrict use of the groundwater for potable use until the remedy is complete. Groundwater monitoring will be used to track performance of the remedy and verify that the RAOs have been achieved at the conclusion	Compliance with this requirement will be achieved by reducing the concentration of Cr(T) in the affected aquifer to a concentration below the federal and state MCLs of 100 µg/L and 50 mg/L respectively, which represent the chemical concentrations in drinking water considered safe for human consumption. There are no MCLs or MCLGs for Cr(VI) and the RAO of 32 µg/L (based on the regional background concentration) has been established at the conclusion of remedy implementation. Concentrations of Cr(VI) and in-situ byproducts (e.g., arsenic, manganese) may fluctuate above baseline levels within the treatment area during remedy implementation. In addition, as part of the remedy fresh water from a well in Arizona will be injected west of the plume, within the project’s Area of Potential Effects. The naturally occurring arsenic concentration in water from the well exceeds the MCL of 10 µg/L, which is typical of water quality in the vicinity of Topock,	Compliance with this requirement will be achieved by reducing the concentration of Cr(T) in the affected aquifer to a concentration below the federal and state MCLs of 100 µg/L and 50 mg/L respectively, which represent the chemical concentrations in drinking water considered safe for human consumption. The state MCL for Cr(VI) is 10 µg/L. The RAO has been established based on the regional background concentration of 32 µg/L at the conclusion of remedy implementation. Concentrations of Cr(VI) and in-situ byproducts (e.g., arsenic, manganese) may fluctuate above baseline levels within the treatment area during remedy implementation. In addition, as part of the remedy fresh water from a well in Arizona will be injected west of the plume, within the project’s Area of Potential Effects. The naturally occurring arsenic	Compliance with this requirement will be achieved by reducing the concentration of Cr(T) in the affected aquifer to a concentration below the federal and state MCLs of 100 µg/L and 50 mg/L respectively, which represent the chemical concentrations in drinking water considered safe for human consumption. The state MCL for Cr(VI) is 10 µg/L but the RAO has been established based on the Alluvial Aquifer regional background concentration of 32 µg/L at the conclusion of remedy implementation. Concentrations of Cr(VI) and in-situ byproducts (e.g., arsenic, manganese) may fluctuate above baseline levels within the treatment area during remedy implementation. In addition, as part of the remedy fresh water from a well in Arizona will be injected west of the plume, within the project’s Area of Potential Effects. The naturally occurring arsenic

TABLE L1.1-3
Summary of Compliance with Identified ARARs
Groundwater Remedy Basis of Design Report/Final (100%) Design
PG&E Topock Compressor Station, Needles, California

Item No.[1]	Category[1]	Citation[1,2]	Determination[1,2]	Description in DOI's ARARs Table[1,2]	Triggering Event	Compliance Responsibility	Which existing/ future document(s) will document continued compliance with this ARAR?[4]	Action (Compliance Status)			
								Preliminary (30%) Design	Intermediate (60%) Design	Pre-Final (90%)/Supplemental 90% Design	Final (100%) Design
								of remedy implementation and prior to removing the institutional control.	Arizona**,** will be pre-treated to below MCL prior to injection. Modeling indicates that arsenic concentrations that may temporarily be elevated by the generation from in-situ remediation are localized, will attenuate under site conditions, and will return to pre-remedy baseline levels after the end of active remediation. Modeling also indicates that manganese generated from in-situ remediation does not exceed the upper tolerance level of background manganese concentration at the site. The final groundwater remedy includes an institutional control to restrict use of the groundwater for potable use until the remedy is complete. Groundwater monitoring will be used to track performance of the remedy and verify that the RAOs have been achieved at the conclusion of remedy implementation and prior to removing the institutional control.	concentration in water from the well exceeds the MCL of 10 µg/L, which is typical of water quality in the vicinity of Topock, Arizona. Modeling indicates that arsenic concentrations that may temporarily be elevated by the generation from in-situ remediation and freshwater injection are localized, will attenuate under site conditions, and will return to pre-remedy baseline levels after the end of active remediation and the cessation of freshwater injection, respectively. Modeling also indicates that manganese generated from in-situ remediation does not exceed the upper tolerance level of background manganese concentration at the site. The final groundwater remedy includes an institutional control to restrict use of the groundwater for potable use until the remedy is complete. Groundwater monitoring will be used to track performance of the remedy and verify that the RAOs have been achieved at the conclusion of remedy implementation and prior to removing the institutional control.	concentration in water from the well exceeds the MCL of 10 µg/L, which is typical of water quality in the vicinity of Topock, Arizona. Modeling indicates that elevated arsenic concentrations generated from in-situ remediation and freshwater injection are localized, will attenuate under site conditions, and will return to pre-remedy baseline levels approximately 10 years after the end of active remediation and the cessation of freshwater injection, respectively. Modeling also indicates that manganese generated from in-situ remediation does not exceed the upper tolerance level of background manganese concentration at the site. The final groundwater remedy includes an institutional control to restrict use of the groundwater for potable use until the remedy is complete. Groundwater monitoring will be used to track performance of the remedy and verify that the RAOs have been achieved at the conclusion of remedy implementation and prior to removing the institutional control.

TABLE L1.1-3
Summary of Compliance with Identified ARARs
Groundwater Remedy Basis of Design Report/Final (100%) Design
PG&E Topock Compressor Station, Needles, California

Item No.[1]	Category[1]	Citation[1,2]	Determination[1,2]	Description in DOI's ARARs Table[1,2]	Triggering Event	Compliance Responsibility	Which existing/ future document(s) will document continued compliance with this ARAR?[4]	Action (Compliance Status)			
								Preliminary (30%) Design	Intermediate (60%) Design	Pre-Final (90%)/Supplemental 90% Design	Final (100%) Design
100	California Action-Specific	Water Quality Control Plan; Colorado River Basin-Region 7, June 2006 (Basin Plan)	ARAR Applicable	This Basin Plan designates the Colorado River and the Colorado Hydrologic unit as having the beneficial use of "MUN" (or, municipal or domestic water supply). The Basin Plan also prescribes General Surface Water Objectives and Ground Water Objectives, in addition to Specific Surface Water Objectives for the Colorado River, which include a flow-weighted average annual numeric criterion for salinity for the portion of the Colorado River on the Topock Site of 723 mg/L. This TDS value must not be exceeded in any remedial alternative being considered	Remedy implementation	PG&E	O&M Plan (sampling and monitoring plan, contingency plan), Progress Reports, Corrective Measure/Remedial Action Completion Report	Surface water sampling in the Colorado River near the site shows concentrations of Cr(T) less than the federal and state MCLs of 100 µg/L and 50 mg/L (drinking water supply standards). Surface water sampling in the Colorado River also show concentrations of Cr(VI) less than the California Toxics Rule criterion of 11 µg/L (protection of freshwater aquatic life). Reducing Cr(VI) concentrations in groundwater by implementation of the remedy will increase the level of certainty that surface water quality will continue to remain below these levels. PG&E will prepare an O&M Plan, Progress Reports, and a Corrective Measure/Remedial Action Completion Report. The remedy is intended to restore groundwater to the regional background Cr(VI) concentration of 32 µg/L, thereby addressing any contribution by PG&E affecting potential beneficial uses. The operation of the River Bank Extraction Wells will prevent migration of contaminants to the Colorado river that could impact beneficial uses or result in a failure to meet surface water quality objectives.	Surface water sampling in the Colorado River near the site shows concentrations of Cr(T) less than the federal and state MCLs of 100 µg/L and 50 mg/L (drinking water supply standards). Surface water sampling in the Colorado River also show concentrations of Cr(VI) less than the California Toxics Rule criterion of 11 µg/L (protection of freshwater aquatic life). Reducing Cr(VI) concentrations in groundwater by implementation of the remedy will increase the level of certainty that surface water quality will continue to remain below these levels. The remedy is intended to restore groundwater to the regional background Cr(VI) concentration of 32 µg/L, thereby addressing any contribution by PG&E affecting potential beneficial uses. The operation of the River Bank Extraction Wells will prevent migration of contaminants to the Colorado River that could impact beneficial uses or result in a failure to meet surface water quality objectives. The remedy is also designed and will be implemented to control the generation and migration of in-situ by-products (arsenic, manganese). The MCL for arsenic is 10 µg/L and the secondary MCL for manganese is 50 µg/L. In addition, as part of the remedy fresh water from a well in Arizona will be injected west of the plume, within the project's Area of Potential Effects. The naturally occurring arsenic concentration in water from the well exceeds the MCL of 10 µg/L (which is typical of water quality in the vicinity of Topock, Arizona) will be pre-treated to below MCL prior to injection**.** Modeling indicates that arsenic concentrations that may temporarily be elevated by	Surface water sampling in the Colorado River near the site shows concentrations of Cr(T) less than the federal and state MCLs of 100 µg/L and 50 mg/L (drinking water supply standards). Surface water sampling in the Colorado River also show concentrations of Cr(VI) less than the California Toxics Rule criterion of 11 µg/L (protection of freshwater aquatic life). Surface water data in the Colorado River show concentrations of TDS less than the Surface Water Objectives for the Colorado River of 723 mg/L. Calculations show that remedy operations have insignificant impact on TDS in the river. Reducing Cr(VI) concentrations in groundwater by implementation of the remedy will increase the level of certainty that surface water quality will continue to remain below these levels. The remedy is intended to restore groundwater to the regional background Cr(VI) concentration of 32 µg/L, thereby addressing any contribution by PG&E affecting potential beneficial uses. The operation of the River Bank Extraction Wells will prevent migration of contaminants to the Colorado River that could impact beneficial uses or result in a failure to meet surface water quality objectives. The remedy is also designed and will be implemented to control the generation and migration of in-situ by-products (arsenic, manganese). The MCL for arsenic is 10 µg/L and the secondary MCL for manganese is 50 µg/L. In	Surface water sampling in the Colorado River near the site shows concentrations of Cr(T) less than the federal and state MCLs of 100 µg/L and 50 mg/L (drinking water supply standards). Surface water sampling in the Colorado River also show concentrations of Cr(VI) less than the California Toxics Rule criterion of 11 µg/L (protection of freshwater aquatic life). Surface water data in the Colorado River show concentrations of TDS less than the Surface Water Objectives for the Colorado River of 723 mg/L. Calculations show that remedy operations have insignificant impact on TDS in the river. The remedy is intended to restore groundwater to the regional background Cr(VI) concentration of 32 µg/L, thereby addressing any contribution by PG&E affecting potential beneficial uses. The operation of the River Bank Extraction Wells will prevent migration of contaminants to the Colorado River that could impact beneficial uses or result in a failure to meet surface water quality objectives. The remedy is also designed and will be implemented to control the generation and migration of in-situ by-products (arsenic, manganese). The MCL for arsenic is 10 µg/L and the secondary MCL for manganese is 50 µg/L. In addition, as part of the remedy fresh water from a well in Arizona will be injected west of the plume, within the project's Area of Potential Effects. The naturally occurring arsenic concentration in water from

TABLE L1.1-3
Summary of Compliance with Identified ARARs
Groundwater Remedy Basis of Design Report/Final (100%) Design
PG&E Topock Compressor Station, Needles, California

Item No.[1]	Category[1]	Citation[1,2]	Determination[1,2]	Description in DOI's ARARs Table[1,2]	Triggering Event	Compliance Responsibility	Which existing/ future document(s) will document continued compliance with this ARAR?[4]	Action (Compliance Status)			
								Preliminary (30%) Design	Intermediate (60%) Design	Pre-Final (90%)/Supplemental 90% Design	Final (100%) Design
									the generation from in-situ remediation are localized, will attenuate under site conditions and will return to pre-remedy baseline levels after the end of active remediation. Modeling also indicates that manganese generated from in-situ remediation does not exceed the upper tolerance level of background manganese concentration at the site. The O&M Manual is Appendix L of this BOD Report for the 60% design. PG&E will prepare Progress Reports and a Corrective Measure/Remedial Action Completion Report.	addition, as part of the remedy fresh water from a well in Arizona will be injected west of the plume, within the project's Area of Potential Effects. The naturally occurring arsenic concentration in water from the well exceeds the MCL of 10 µg/L, which is typical of water quality in the vicinity of Topock, Arizona. Modeling indicates that arsenic concentrations that may temporarily be elevated by the generation from in-situ remediation and freshwater injection are localized, will attenuate under site conditions and will return to pre-remedy baseline levels after the end of active remediation and the cessation of freshwater injection, respectively. Modeling also indicates that manganese generated from in-situ remediation does not exceed the upper tolerance level of background manganese concentration at the site.	the well exceeds the MCL of 10 µg/L, which is typical of water quality in the vicinity of Topock, Arizona. Modeling indicates that elevated arsenic concentrations generated from in-situ remediation and freshwater injection are localized, will attenuate under site conditions and will return to pre-remedy baseline levels approximately 10 years after the end of active remediation and the cessation of freshwater injection, respectively. Modeling also indicates that manganese generated from in-situ remediation does not exceed the upper tolerance level of background manganese concentration at the site.

TABLE L1.1-3
Summary of Compliance with Identified ARARs
Groundwater Remedy Basis of Design Report/Final (100%) Design
PG&E Topock Compressor Station, Needles, California

Item No.[1]	Category[1]	Citation[1,2]	Determination[1,2]	Description in DOI's ARARs Table[1,2]	Triggering Event	Compliance Responsibility	Which existing/ future document(s) will document continued compliance with this ARAR?[4]	Action (Compliance Status)			
								Preliminary (30%) Design	Intermediate (60%) Design	Pre-Final (90%)/Supplemental 90% Design	Final (100%) Design
101	California Action-Specific	State Water Resources Control Board Resolution No. 68-16 ("Antidegradation Policy") - Statement of Policy with respect to Maintaining High Quality of Waters in California	ARAR Applicable	Any activity which produces or may produce a waste or increased volume or concentration of waste and which discharges or proposes to discharge to existing high quality waters will be required to meet waste discharge requirements which will result in the best practicable treatment or control of the discharge necessary to assure that (a) a pollution or nuisance will not occur and (b) the highest water quality consistent with maximum benefit to the people of the State will be maintained.	Remedy implementation	PG&E	O&M Plan (sampling and monitoring plan, contingency plan), Progress Reports, Corrective Measure/Remedial Action Completion Report	PG&E will prepare an O&M Plan, Progress Reports, and a Corrective Measure/Remedial Action Completion Report. Although constituent concentrations will fluctuate inside the footprint of the remedy during implementation, at the conclusion of the remedy the RAOs will achieve background levels for chromium. Therefore, the remedy will comply with the substantive provisions of the SWRCB Resolution 68-16 that requires maintenance of the highest water quality consistent with maximum benefit to the people of the State, and with the substantive provisions of SWRCB Resolution 92-49 that require restoration of background water quality.	The O&M Manual is Appendix L of the BOD Report for the 60% design. PG&E will prepare Progress Reports and a Corrective Measure/Remedial Action Completion Report. Although constituent concentrations will fluctuate inside the footprint of the remedy during implementation, at the conclusion of the remedy the RAOs will achieve background levels for chromium. In addition, as part of the remedy fresh water from a well in Arizona will be injected west of the plume, within the project's Area of Potential Effects. The naturally occurring arsenic concentration in water from the well exceeds the MCL of 10 µg/L, which is typical of water quality in the vicinity of Topock, Arizona**,** will be pre-treated to below MCL prior to injection. Modeling indicates that arsenic concentrations that may temporarily be elevated by the generation from in-situ remediation will attenuate under site conditions, are localized, and will return to pre-remedy baseline levels after the end of active remediation. Modeling also indicates that manganese generated from in-situ remediation does not exceed the upper tolerance level of background manganese concentration at the site. Therefore, the remedy will comply with the substantive provisions of the SWRCB Resolution 68-16 that requires maintenance of the highest water quality consistent with maximum benefit to the people of the State, and with the substantive provisions of SWRCB Resolution 92-49 that require restoration of background water quality.	The O&M Manual is Appendix L of the BOD Report for the 90% design. PG&E will prepare Progress Reports and a Corrective Measure/Remedial Action Completion Report. Although constituent concentrations will fluctuate inside the footprint of the remedy during implementation, at the conclusion of the remedy the RAOs will achieve background levels for chromium. In addition, as part of the remedy fresh water from a well in Arizona will be injected west of the plume, within the project's Area of Potential Effects. The naturally occurring arsenic concentration in water from the well exceeds the MCL of 10 µg/L, which is typical of water quality in the vicinity of Topock, Arizona. Modeling indicates that arsenic concentrations that may temporarily be elevated by the generation from in-situ remediation and freshwater injection will attenuate under site conditions, are localized, and will return to pre-remedy baseline levels after the end of active remediation and the cessation of freshwater injection, respectively. Modeling also indicates that manganese generated from in-situ remediation does not exceed the upper tolerance level of background manganese concentration at the site. Therefore, the remedy will comply with the substantive provisions of the SWRCB Resolution 68-16 that requires maintenance of the highest water quality consistent with	The O&M Manual is Appendix L of the Final BOD Report. PG&E will prepare Progress Reports and a Corrective Measure/Remedial Action Completion Report. Although constituent concentrations will fluctuate inside the footprint of the remedy during implementation, at the conclusion of the remedy the RAOs will achieve background levels for chromium. In addition, as part of the remedy fresh water from a well in Arizona will be injected west of the plume, within the project's Area of Potential Effects. The naturally occurring arsenic concentration in water from the well exceeds the MCL of 10 µg/L, which is typical of water quality in the vicinity of Topock, Arizona. Modeling indicates that elevated arsenic concentrations generated from in-situ remediation and freshwater injection will attenuate under site conditions, are localized, and will return to pre-remedy baseline levels approximately 10 years after the end of active remediation and the cessation of freshwater injection, respectively. Modeling also indicates that manganese generated from in-situ remediation does not exceed the upper tolerance level of background manganese concentration at the site. Therefore, the remedy will comply with the substantive provisions of the SWRCB Resolution 68-16 that requires maintenance of the highest water quality consistent with

TABLE L1.1-3
Summary of Compliance with Identified ARARs
Groundwater Remedy Basis of Design Report/Final (100%) Design
PG&E Topock Compressor Station, Needles, California

Item No.[1]	Category[1]	Citation[1,2]	Determination[1,2]	Description in DOI's ARARs Table[1,2]	Triggering Event	Compliance Responsibility	Which existing/ future document(s) will document continued compliance with this ARAR?[4]	Action (Compliance Status)			
								Preliminary (30%) Design	Intermediate (60%) Design	Pre-Final (90%)/Supplemental 90% Design	Final (100%) Design
										maximum benefit to the people of the State, and with the substantive provisions of SWRCB Resolution 92-49 that require restoration of background water quality.	maximum benefit to the people of the State, and with the substantive provisions of SWRCB Resolution 92-49 that require restoration of background water quality.
102	California Action-Specific	State Water Resources Control Board Resolution No. 92-49 -- Policies and Procedures for investigation and Cleanup and Abatement of Discharges under Water Code Section 13304	ARAR Relevant and Appropriate	Section III.A of this Resolution states that the Regional Water Board shall "concur with any investigative and abatement proposal which the discharger demonstrates and the Regional Water Board finds to have a substantial likelihood to achieve compliance within a reasonable time frame…"	Remedy implementation	PG&E	Corrective Measure/ Remedial Action Completion Report	PG&E will prepare a Corrective Measure/Remedial Action Completion Report. Because RAOs will achieve background levels for chromium, the remedy will comply with the substantive provisions of the SWRCB Resolution 92-49 that require restoration of background water quality.	PG&E will prepare a Corrective Measure/Remedial Action Completion Report. Because RAOs will achieve background levels for chromium, the remedy will comply with the substantive provisions of the SWRCB Resolution 92-49 that require restoration of background water quality.	PG&E will prepare a Corrective Measure/Remedial Action Completion Report. Because RAOs will achieve background levels for chromium, the remedy will comply with the substantive provisions of the SWRCB Resolution 92-49 that require restoration of background water quality.	PG&E will prepare and submit a Corrective Measure/ Remedial Action Completion Report. Because RAOs will achieve background levels for chromium, the remedy will comply with the substantive provisions of the SWRCB Resolution 92-49 that require restoration of background water quality.
Location-Specific											
5	Federal Location-Specific	Federal Land Policy and Management Act - (FLPMA);43 USC § 1701, et seq.; 43 CFR 2800	ARAR Applicable	In managing public lands, BLM is directed to take any action necessary to prevent unnecessary or undue degradation of the lands. Actions[3] taken on the public land (i.e. BLM-managed land) portions of the Topock site should provide the "optimal balance between authorized resource use and the protection and long-term sustainability of sensitive resources."	Activities on public lands	BLM	Design submittals, Construction/ Remedial Action Work Plan, O&M Plan, Progress Reports, Plan for Decommissioning of Remedy Facilities and Restoration	The preliminary (30%) design was submitted by PG&E to DOI on November 18, 2011, and includes proposed facilities on BLM land. PG&E will prepare future design submittals, a Construction/Remedial Action Work Plan, an O&M Plan, Progress Reports, and a Decommissioning Plan for review by DOI. PG&E understands that DOI will coordinate its review of these submittals with BLM.	The 60% design was submitted to DOI on April 5, 2013, and includes proposed facilities on BLM land. Engineering drawings are included as Appendix D to this 60% design report and an O&M Manual is included as Appendix L. PG&E will submit a Construction/Remedial Action Work Plan as part of the 90% design, a Decommissioning Plan prior to decommissioning, and progress reports for review by DOI. PG&E understands that DOI will coordinate its review of these submittals with BLM.	The 90% design was submitted to DOI on September 8, 2014, and includes proposed facilities on BLM land. Engineering drawings are included as Appendix D to the 90% design report and an O&M Manual is included as Appendix L. The Construction/Remedial Action Work Plan was also submitted concurrently with the 90% design as part of the 90% design. Progress reports will be submitted during the construction and operation and maintenance of the remedy. PG&E understands that DOI will coordinate its review of these submittals with BLM. In compliance with the CD (Appendix C Scope of Work, Article 9), PG&E will prepare a site-specific Plan for Decommissioning and Restoration of remedy facilities within 120 days of DOI's certification of remedial action completion and a determination by DOI that removal of such facilities is	The final design was submitted to DOI on November 18, 2015, and includes proposed facilities on BLM land. Engineering drawings are included as Appendix D to this final design report and an O&M Manual is included as Appendix L. The Construction/Remedial Action Work Plan was also submitted concurrently with the final design. Progress reports will be submitted during the construction and operation and maintenance of the remedy. PG&E understands that DOI will coordinate its review of these submittals with BLM. In compliance with the CD (Appendix C Scope of Work, Article 9), PG&E will prepare a site-specific Plan for Decommissioning and Restoration of remedy facilities within 120 days of DOI's certification of remedial action completion and a determination by DOI that removal of such facilities is

TABLE L1.1-3
Summary of Compliance with Identified ARARs
Groundwater Remedy Basis of Design Report/Final (100%) Design
PG&E Topock Compressor Station, Needles, California

Item No.[1]	Category[1]	Citation[1,2]	Determination[1,2]	Description in DOI's ARARs Table[1,2]	Triggering Event	Compliance Responsibility	Which existing/ future document(s) will document continued compliance with this ARAR?[4]	Action (Compliance Status)			
								Preliminary (30%) Design	Intermediate (60%) Design	Pre-Final (90%)/Supplemental 90% Design	Final (100%) Design
										protective of human health and the environment.	protective of human health and the environment.
7	Federal Location-Specific	National Wildlife Refuge System Administration Act, as amended - 16 USC §§ 668dd-ee; 50 CFR Part 27	ARAR Applicable	This Act governs the use and management of National Wildlife Refuges. The Act requires that USFWS evaluate ongoing and proposed activities and uses to ensure that such activities are appropriate and compatible with both the mission of the overall National Wildlife Refuge System, as well as the specific purposes for which the Havasu National Wildlife Refuge (HNWR) was established. The Topock site includes portions of the HNWR. Prior to selection of a remedial action[3] by DOI/USFWS, that remedial action must be found by the Refuge Manager to be both an appropriate use of the HNWR and compatible with the mission of the HNWR and the Refuge System as a whole. [2]	Activities on the HNWR	USFWS/DOI	Design submittals, Construction/ Remedial Action Work Plan, O&M Plan, Progress Reports, Plan for Decommissioning of Remedy Facilities and Restoration	The preliminary (30%) design was submitted by PG&E to agencies on November 18. 2011 and includes proposed facilities on HNWR land. PG&E will prepare future design submittals, a Construction/Remedial Action Work Plan, an O&M Plan, Progress Reports, and a Decommissioning Plan for review by DOI. PG&E understands that DOI will coordinate its review of these submittals with USFWS.	The 60% design was submitted to DOI on April 5, 2013, and includes proposed facilities on HNWR land. Engineering drawings are included as Appendix D to this 60% design report and an O&M Manual is included as Appendix L. PG&E will submit a Construction/Remedial Action Work Plan as part of the 90% design, a Decommissioning Plan prior to decommissioning, and progress reports for review by DOI. PG&E understands that DOI will coordinate its review of these submittals with USFWS.	See Table 6.2-1A, Information for the Havasu National Wildlife Refuge's Appropriate Use Analysis and Compatibility Determination (AUA/CD).	See Table 6.2-1A, Information for the Havasu National Wildlife Refuge's Appropriate Use Analysis and Compatibility Determination (AUA/CD).

TABLE L1.1-3
Summary of Compliance with Identified ARARs
Groundwater Remedy Basis of Design Report/Final (100%) Design
PG&E Topock Compressor Station, Needles, California

Item No.[1]	Category[1]	Citation[1,2]	Determination[1,2]	Description in DOI's ARARs Table[1,2]	Triggering Event	Compliance Responsibility	Which existing/ future document(s) will document continued compliance with this ARAR?[4]	Action (Compliance Status)			
								Preliminary (30%) Design	Intermediate (60%) Design	Pre-Final (90%)/Supplemental 90% Design	Final (100%) Design
13	Federal Location-Specific	Fish and Wildlife Coordination Act - 16 USC §§ 661-667e	ARAR Applicable	This Act requires that any federally-funded or authorized modification of a stream or other water body must provide adequate provisions for conservation, maintenance, and management of wildlife resources and their habitat. Necessary measures should be taken to mitigate, prevent, and compensate for project-related losses of wildlife resources. Any remedial action selected for the Topock site that includes any modification of a water body will be subject to these requirements.	Any modification of a water body	PG&E	N/A. No further action required unless design change triggers; reconfirm in design submittals.	No further action is required. The preliminary (30%) design does not include modification of a water body.	Figure 2.4-5 in the 60% BOD Report document shows the overlaps between remedy infrastructure and the USACE and CDFW jurisdictional waters/wetlands. As shown in Figure 2.4-5, PG&E determined in the 60% Design that complete avoidance of washes is not feasible due to the need to install remediation and monitoring wells and associated pipes and components in washes (e.g., a wash in the Upland, Bat Cave Wash). For activities to be conducted in CDFW jurisdictional washes, PG&E will comply with the avoidance and minimization measures specified in the CDFW letter dated March 6, 2013 (CDFW 2013), and any additional measures PG&E's biologist determines to be necessary. PG&E will work with USACE and USFWS to determine and comply with the substantive requirements, per CERCLA 121(e), of Section 404 and the Fish and Wildlife Coordination Act, respectively.	Figure 2.4-5 in the 90% BOD Report document shows the overlaps between remedy infrastructure and the USACE and CDFW jurisdictional waters/wetlands. As shown in Figure 2.4-5, PG&E determined in the 90% Design that complete avoidance of washes is not feasible due to the need to install remediation and monitoring wells and associated pipes and components in washes (e.g., a wash in the Upland, Bat Cave Wash). For activities to be conducted in CDFW jurisdictional washes, PG&E will comply with the avoidance and minimization measures specified in the CDFW letter dated March 6, 2013 (CDFW 2013), and any additional measures PG&E's biologist determines to be necessary. PG&E will also comply with avoidance, minimization and mitigation measures specified in the Section 404 protocol (see Exhibit 6.1-1 at the end of Table 6.1-1) and the requirements of the Programmatic Biological Assessment. USFWS will be consulted on the 90% BOD Report.	Figure 2.4-5 in this Final BOD Report document shows the overlaps between remedy infrastructure and the USACE and CDFW jurisdictional waters/wetlands. As shown in Figure 2.4-5, PG&E determined in the final design that complete avoidance of washes is not feasible due to the need to install remediation and monitoring wells and associated pipes and components in washes (e.g., a wash in the Upland, Bat Cave Wash). For activities to be conducted in CDFW jurisdictional washes, PG&E will comply with the avoidance and minimization measures specified in the CDFW letter dated March 6, 2013 (CDFW 2013), and any additional measures PG&E's biologist determines to be necessary. PG&E will also comply with avoidance, minimization and mitigation measures specified in the Section 404 protocol (see Exhibit 6.1-1 at the end of Table 6.1-1) and the requirements of the Programmatic Biological Assessment. USFWS was consulted on the 90% BOD Report and during the 90% RTC process.

TABLE L1.1-3
Summary of Compliance with Identified ARARs
Groundwater Remedy Basis of Design Report/Final (100%) Design
PG&E Topock Compressor Station, Needles, California

Item No.[1]	Category[1]	Citation[1,2]	Determination[1,2]	Description in DOI's ARARs Table[1,2]	Triggering Event	Compliance Responsibility	Which existing/ future document(s) will document continued compliance with this ARAR?[4]	Action (Compliance Status)			
								Preliminary (30%) Design	Intermediate (60%) Design	Pre-Final (90%)/Supplemental 90% Design	Final (100%) Design
14	Federal Location-Specific	National Historic Preservation Act - 16 USC § 470, et seq.;36 CFR 800.1, et seq.	ARAR Applicable	This statute and the implementing regulations direct federal agencies to consider the effects of their undertakings on historic properties included in or eligible for inclusion in the National Register of Historic Places and to consult with certain parties before moving forward with the undertaking. The agency must determine, based on consultation, if an undertaking's effects would be adverse and consider feasible and prudent alternatives that could avoid, mitigate, or minimize such adverse effects on a National Register or eligible property. The agency must then specify how adverse effects will be avoided or mitigated or acknowledge that such effects cannot be avoided or mitigated. The Topock site includes historic properties in or eligible for inclusion in the National Register and remedial action selected for the Topock site qualifies as an undertaking pursuant to the NHPA. Measures to avoid or mitigate adverse effects of any selected remedial action that are adopted by the agency through consultation must be implemented by the remedial action to comply with the NHPA.	Remedial action selected for the Topock site qualifies as an undertaking under NHPA	BLM, Advisory Council on Historic Preservation, California and Arizona State Historic Preservation Offices, USFWS and PG&E are parties to the PA	PA, CHPMP, Design Submittals, Construction/Remedial Action Work Plan, Plan for decommissioning, removal, and restoration of IM-3 facility, Plan for Decommissioning of Remedy Facilities and Restoration, Documents related to ongoing consultation, Brochure, Annual Report, Tribal Access Plan	Documents led by BLM include the PA, the CHPMP, the Brochure, the Annual Report, and the Tribal Access Plan. The PA has been completed. The Brochure to notify other state and federal agencies of the Signatories and Invited Signatories with the actions to be taken within the vicinity of the Topock Remediation Project, and the Topock Maze, is completed. The CHPMP, which is a requirement of the PA, is under preparation and the goal is to have a plan in place by January 20, 2012. BLM distributed a draft CHPMP on November 1, 2011. Comments on the draft CHPMP are due December 5, 2011. The Tribal Access Plan is also under preparation and the goal is to complete the Plan by November 26, 2011 (note that the PA-required Tribal Access Plan will be coordinated with the EIR-required Access Plan).Annual reports of cultural resources activities will be prepared and submitted to all Signatories, Tribes, and Invited Signatories as directed in the PA. Documents led by PG&E include design submittals, a Construction/Remedial Action Work Plan, a Plan for decommissioning, removal, and restoration of IM-3 facility, and a Decommissioning Plan for Remedy Facilities and Restoration. The preliminary (30%) design was submitted on November 18, 2011. The other documents will be prepared and submitted.	Documents led by BLM include the PA, the CHPMP, the Brochure, the Annual Report, and the Tribal Access Plan. The PA has been completed. The Brochure to notify other state and federal agencies of the Signatories and Invited Signatories with the actions to be taken within the vicinity of the Topock Remediation Project, and the Topock Maze, is completed. The CHPMP, which is a requirement of the PA, was issued on January 20, 2012. The CHPMP can be modified and updated, as needed, to address new information and ongoing activities related to the project. Therefore, subsequent to the issuance of the CHPMP, BLM continues to hold periodic working meetings on the CHPMP. It should be noted that treatment measures are included in the CHPMP and a treatment plan will continue to be developed throughout the design to address mitigation measures. The Tribal Access Plan for lands under federal management was completed on November 26, 2011 (note that the PA-required Tribal Access Plan will be coordinated with the EIR-required Access Plan). Annual reports of cultural resources activities will be prepared and submitted to all Signatories, Tribes, and Invited Signatories as directed in the PA. BLM published the first Annual Report on November 25, 2011, and the second Annual Report on January 29, 2013. The PA requires that such reports will be prepared and submitted by December 1 each year for the first five years after execution of the PA and every two years thereafter. Documents led by PG&E include design submittals; a Construction/Remedial Action	Documents led by BLM include the PA, the CHPMP, the Brochure, the Annual Report, and the Tribal Access Plan. The PA is completed. The Brochure to notify other state and federal agencies of the Signatories and Invited Signatories with the actions to be taken within the vicinity of the Topock Remediation Project, and the Topock Maze, is also completed. The CHPMP, which is a requirement of the PA, was issued on January 20, 2012. The CHPMP can be modified and updated, as needed, to address new information and ongoing activities related to the project. Therefore, subsequent to the issuance of the CHPMP, BLM continues to hold periodic working meetings on the CHPMP. It should be noted that treatment measures are included in the CHPMP and a treatment plan will be prepared and submitted to DTSC shortly after the submission of the 90% design. The Tribal Access Plan for lands under federal management was completed on November 26, 2011. On October 21, 2013, PG&E provided the Tribes a draft of the Access Plan for lands not under federal management for review and comment. Tribal comments were received on November 22, 2013. PG&E has updated the plan and included the plan in an appendix of the Construction/Remedial Action Work Plan. (Note that the PA-required Tribal Access Plan was coordinated with the EIR-required Access Plan).	Documents led by BLM include the PA, the CHPMP, the Brochure, the Annual Report, and the Tribal Access Plan. The PA is completed. The Brochure to notify other state and federal agencies of the Signatories and Invited Signatories with the actions to be taken within the vicinity of the Topock Remediation Project, and the Topock Maze, is also completed. The CHPMP, which is a requirement of the PA, was issued on January 20, 2012. The CHPMP can be modified and updated, as needed, to address new information and ongoing activities related to the project. Therefore, subsequent to the issuance of the CHPMP, BLM continues to hold periodic working meetings on the CHPMP. It should be noted that treatment measures are included in the CHPMP, and a Cultural and Historic Property Treatment Plan was submitted to DTSC, DOI, and BLM shortly after the 90% design submittal. The Tribal Access Plan for lands under federal management was completed on November 26, 2011. PG&E has prepared an Access Plan in coordination with Tribes for the lands not under federal management, taking into consideration the information in the BLM Access Plan. The Access Plan is included in an appendix of the Construction/Remedial Action Work Plan submitted on November 18, 2015. Annual reports of cultural resources activities will be prepared and submitted to all Signatories, Tribes, and Invited

TABLE L1.1-3
Summary of Compliance with Identified ARARs
Groundwater Remedy Basis of Design Report/Final (100%) Design
PG&E Topock Compressor Station, Needles, California

Item No.[1]	Category[1]	Citation[1,2]	Determination[1,2]	Description in DOI's ARARs Table[1,2]	Triggering Event	Compliance Responsibility	Which existing/ future document(s) will document continued compliance with this ARAR?[4]	Action (Compliance Status)			
								Preliminary (30%) Design	Intermediate (60%) Design	Pre-Final (90%)/Supplemental 90% Design	Final (100%) Design
									Work Plan; a Plan for decommissioning, removal, and restoration of the IM-3 facility; and a Decommissioning Plan for Remedy Facilities and Restoration. The intermediate (60%) design submittal was submitted on April 5, 2013. The other documents will be prepared and submitted.	Annual reports of cultural resources activities will be prepared and submitted to all Signatories, Tribes, and Invited Signatories as directed in the PA. BLM published the first Annual Report on November 25, 2011, and the second Annual Report on January 29, 2013. The Third Annual Report was provided by BLM to the Signatories, Tribes, and Invited Signatories for comment on June 18, 2014. The PA requires that such reports will be prepared and submitted by December 1 each year for the first five years after execution of the PA and every two years thereafter. Documents led by PG&E include design submittals; a Construction/Remedial Action Work Plan; a Plan for decommissioning, removal, and restoration of the IM-3 facility; and a Decommissioning Plan for Remedy Facilities and Restoration. The 90% design, the Construction/Remedial Action Work Plan, and the IM-3 decommissioning, removal, and restoration work plan were submitted on September 8, 2014. In compliance with the CD (Appendix C Scope of Work, Article 9), PG&E will prepare a site-specific Plan for Decommissioning and Restoration of remedy facilities within 120 days of DOI's certification of remedial action completion and a determination by DOI that removal of such facilities is protective of human health and the environment.	Signatories as directed in the PA. BLM published the first Annual Report on November 25, 2011, and the second Annual Report on January 29, 2013. The Third Annual Report was provided by BLM to the Signatories, Tribes, and Invited Signatories for comment on June 18, 2014. The PA requires that such reports will be prepared and submitted by December 1 each year for the first five years after execution of the PA and every two years thereafter. Documents led by PG&E include design submittals; a Construction/Remedial Action Work Plan; a Plan for decommissioning, removal, and restoration of the IM-3 facility; and a Decommissioning Plan for Remedy Facilities and Restoration. The final design, the Construction/Remedial Action Work Plan, and the IM-3 decommissioning, removal, and restoration work plan were submitted on November 18, 2015. In compliance with the CD (Appendix C Scope of Work, Article 9), PG&E will prepare a site-specific Plan for Decommissioning and Restoration of remedy facilities within 120 days of DOI's certification of remedial action completion and a determination by DOI that removal of such facilities is protective of human health and the environment.

TABLE L1.1-3
Summary of Compliance with Identified ARARs
Groundwater Remedy Basis of Design Report/Final (100%) Design
PG&E Topock Compressor Station, Needles, California

Item No.[1]	Category[1]	Citation[1,2]	Determination[1,2]	Description in DOI's ARARs Table[1,2]	Triggering Event	Compliance Responsibility	Which existing/ future document(s) will document continued compliance with this ARAR?[4]	Action (Compliance Status)			
								Preliminary (30%) Design	Intermediate (60%) Design	Pre-Final (90%)/Supplemental 90% Design	Final (100%) Design
17	Federal Location-Specific	National Archaeological and Historic Preservation Act – 16 USC § 469, et seq.; 36 CFR 65	ARAR Applicable	This statute requires the evaluation and preservation of historical and archaeological data which might otherwise be irreparably lost or destroyed through any alteration of terrain as a result of federal construction projects or a federally-licensed activity. The Topock site includes historical and archaeological data. Any remedial action selected for the Topock site must include measures for the evaluation and preservation of historical and archaeological data that might be lost or destroyed as a result of the remedial action.	Alteration of terrain that threatens significant scientific, historical or archaeological data.	Federal Agencies, PG&E	PA, CHPMP, Design Submittals, Construction/ Remedial Action Work Plan	Requirements in the PA and the forthcoming CHPMP will be adhered to. Documents led by PG&E include design submittals, a Construction/Remedial Action Work Plan, a Plan for decommissioning, removal, and restoration of IM-3 facility, and a Decommissioning Plan for Remedy Facilities and Restoration. The preliminary (30%) design was submitted on November 18, 2011. The other documents will be prepared and submitted.	Requirements in the PA and the CHPMP will be adhered to. Documents led by PG&E include design submittals; a Construction/Remedial Action Work Plan; a Plan for decommissioning, removal, and restoration of the IM-3 facility; and a Decommissioning Plan for Remedy Facilities and Restoration. The intermediate (60%) design submittal was submitted on April 5, 2013. The other documents will be prepared and submitted.	Requirements in the PA and the CHPMP will be adhered to. These requirements include implementation of mitigation measures identified in the PA and the CHPMP and through ongoing consultation activities with the Tribes that will avoid, mitigate, or otherwise minimize adverse effects from the undertaking. Tables 6.2-2 and 6.2-3 summarize actions by PG&E to implement the applicable provisions under the PA and the CHPMP. Documents led by PG&E include design submittals; a Construction/Remedial Action Work Plan; a Plan for decommissioning, removal, and restoration of the IM-3 facility; and a Decommissioning Plan for Remedy Facilities and Restoration. The 90% design, the Construction/Remedial Action Work Plan, and the IM-3 decommissioning, removal, and restoration work plan were submitted on September 8, 2014. In compliance with the CD (Appendix C Scope of Work, Article 9), PG&E will prepare a Plan for Decommissioning and Restoration of the remedy facilities within 120 days of DOI's certification of remedial action completion and a determination by DOI that removal of such facilities is protective of human health and the environment.	Requirements in the PA and the CHPMP will be adhered to. These requirements include implementation of mitigation measures identified in the PA and the CHPMP and through ongoing consultation activities with the Tribes that will avoid, mitigate, or otherwise minimize adverse effects from the undertaking. Tables 6.2-2 and 6.2-3 summarize actions by PG&E to implement the applicable provisions under the PA and the CHPMP. Additionally, treatment measures are included in a Cultural and Historic Property Treatment Plan that was submitted to DTSC, DOI, and BLM shortly after the 90% design submittal, and will be adhered to. Documents led by PG&E include design submittals; a Construction/Remedial Action Work Plan; a Plan for decommissioning, removal, and restoration of the IM-3 facility; and a Decommissioning Plan for Remedy Facilities and Restoration. The final design, the Construction/Remedial Action Work Plan, and the IM-3 decommissioning, removal, and restoration work plan were submitted on November 18, 2015. In compliance with the CD (Appendix C Scope of Work, Article 9), PG&E will prepare a Plan for Decommissioning and Restoration of the remedy facilities within 120 days of DOI's certification of remedial action completion and a determination by DOI that removal of such facilities is

TABLE L1.1-3
Summary of Compliance with Identified ARARs
Groundwater Remedy Basis of Design Report/Final (100%) Design
PG&E Topock Compressor Station, Needles, California

Item No.[1]	Category[1]	Citation[1,2]	Determination[1,2]	Description in DOI's ARARs Table[1,2]	Triggering Event	Compliance Responsibility	Which existing/ future document(s) will document continued compliance with this ARAR?[4]	Action (Compliance Status)			
								Preliminary (30%) Design	Intermediate (60%) Design	Pre-Final (90%)/Supplemental 90% Design	Final (100%) Design
											protective of human health and the environment.
18	Federal Location-Specific	Archaeological Resources Protection Act - 16 USC § 470aa-ii, et seq.;43 CFR 7.1, et seq.	ARAR Applicable	This statute provides for the protection of archeological resources located on public and Tribal lands. The Act establishes criteria which must be met for the land manager's approval of any excavation or removal of archaeological resources if a proposed activity involves soil disturbances. The Topock site includes archaeological resources on public land. Any remedial action selected for the Topock site must satisfy the criteria applicable to excavation or removal of archaeological resources that might be affected as a result of the remedial action.	Disturbance of archaeological and historical sites	Federal Agencies, PG&E	PA, CHPMP, Design Submittals, Construction/ Remedial Action Work Plan	Requirements in the PA and the forthcoming CHPMP will be adhered to. PG&E will prepare and submit design submittals and the Construction/Remedial Action Work Plan. The preliminary (30%) design was submitted on November 18, 2011.	Requirements in the PA and the CHPMP will be adhered to. PG&E will submit a Construction/ Remedial Action Work Plan as part of the 90% design. The 60% design was submitted on April 5, 2013.	Requirements in the PA and the CHPMP will be adhered to. These requirements include implementation of mitigation measures identified in the PA and the CHPMP and through ongoing consultation activities with the Tribes that will avoid, mitigate, or otherwise minimize adverse effects from the undertaking. Tables 6.2-2 and 6.2-3 summarize actions by PG&E to implement the applicable provisions under the PA and the CHPMP. The 90% design and the Construction/Remedial Action Work Plan were submitted on September 8, 2014.	Requirements in the PA and the CHPMP will be adhered to. These requirements include implementation of mitigation measures identified in the PA and the CHPMP and through ongoing consultation activities with the Tribes that will avoid, mitigate, or otherwise minimize adverse effects from the undertaking. Tables 6.2-2 and 6.2-3 summarize actions by PG&E to implement the applicable provisions under the PA and the CHPMP. Additionally, treatment measures are included in a Cultural and Historic Property Treatment Plan that was submitted to DTSC, BLM, and DOI shortly after the 90% design submittal, and will be adhered to. The final design and the Construction/Remedial Action Work Plan were submitted on November 18, 2015.
19	Federal Location-Specific	Historic Sites Act - 16 USC 461-467	ARAR Applicable	Pursuant to this Act, federal agencies are to consider the existence and location of historic sites, buildings, and objects of national significance using information provided by the National Park Service to avoid undesirable impacts upon such landmarks. There are no designated historic landmarks within the APE, although 16 USC 461, through Public Law 106-45, provides for a cooperative program "for the preservation of the Route 66 corridor" through grants and other measures. Undesirable impacts on this site that might result from any	Existence of a historic landmark	Federal Agencies	Reevaluate in design documents if designated historic landmark exist	There are no historic landmarks in the APE. No further action is required.	There are no historic landmarks in the APE. No further action is required.	There are no historic landmarks in the APE. No further action is required.	There are no historic landmarks in the APE. No further action is required.

TABLE L1.1-3
Summary of Compliance with Identified ARARs
Groundwater Remedy Basis of Design Report/Final (100%) Design
PG&E Topock Compressor Station, Needles, California

Item No.[1]	Category[1]	Citation[1,2]	Determination[1,2]	Description in DOI's ARARs Table[1,2]	Triggering Event	Compliance Responsibility	Which existing/ future document(s) will document continued compliance with this ARAR?[4]	Action (Compliance Status)			
								Preliminary (30%) Design	Intermediate (60%) Design	Pre-Final (90%)/Supplemental 90% Design	Final (100%) Design
				remedial action selected for the Topock site will be evaluated and mitigated to the maximum extent practicable.							
21	Federal Location-Specific	Native American Graves Protection and Repatriation Act (NAGPRA) - 25 USC § 3001, et seq.; 43 CFR 10.1, et seq.	ARAR Applicable	NAGPRA establishes requirements regulating the removal and trafficking of human remains and cultural items, including funerary and sacred objects. The Topock site may contain human remains. If remediation activities result in the discovery of Indian human remains or related objects, NAGPRA requirements must be met.	Federal Lands only - Discovery of human remains	PG&E	PA, CHPMP	Requirements of the PA and the forthcoming CHPMP (led by BLM) will be adhered to during the implementation of the remedy.	Requirements of the PA and the CHPMP (led by BLM) will be adhered to during the implementation of the remedy.	Requirements in the PA and the CHPMP will be adhered to. These requirements include implementation of mitigation measures identified in the PA and the CHPMP and through ongoing consultation activities with the Tribes that will avoid, mitigate, or otherwise minimize adverse effects from the undertaking. Tables 6.2-2 and 6.2-3 summarize actions by PG&E to implement the applicable provisions under the PA and the CHPMP.	Requirements in the PA and the CHPMP will be adhered to. These requirements include implementation of mitigation measures identified in the PA and the CHPMP and through ongoing consultation activities with the Tribes that will avoid, mitigate, or otherwise minimize adverse effects from the undertaking. Tables 6.2-2 and 6.2-3 summarize actions by PG&E to implement the applicable provisions under the PA and the CHPMP. Additionally, treatment measures are included in a Cultural and Historic Property Treatment Plan that was submitted to DTSC, BLM, and DOI shortly after the 90% design submittal, and will be adhered to.
22	Federal Location-Specific	American Indian Religious Freedom Act - 42 USC § 1996, et seq.	ARAR Relevant and Appropriate	The United States must "protect and preserve for American Indians their inherent right of freedom to believe, express, and exercise [their] traditional religions..." Any remedial action selected for the Topock site must satisfy this requirement.	Remedy selection	Federal Agencies (BLM Lead), PG&E	Tribal Access Plan	BLM leads the preparation of the Tribal Access Plan. Goal is to complete the plan by November 26, 2011. Note that the EIR-required Access Plan will be coordinated with the PA-required Access Plan.	BLM led the preparation of the Tribal Access Plan for lands under federal management, and the Plan was completed on November 26, 2011. Note that the EIR-required Access Plan is under preparation.	BLM led the preparation of the Tribal Access Plan for lands under federal management, and the Plan was completed on November 26, 2011. The EIR-required Access Plan was prepared and is included in an appendix of the Construction/ Remedial Action Work Plan.	BLM led the preparation of the Tribal Access Plan for lands under federal management, and the Plan was completed on November 26, 2011. The EIR-required Access Plan was prepared and is included in an appendix of the Construction/ Remedial Action Work Plan.

TABLE L1.1-3
Summary of Compliance with Identified ARARs
Groundwater Remedy Basis of Design Report/Final (100%) Design
PG&E Topock Compressor Station, Needles, California

Item No.[1]	Category[1]	Citation[1,2]	Determination[1,2]	Description in DOI's ARARs Table[1,2]	Triggering Event	Compliance Responsibility	Which existing/ future document(s) will document continued compliance with this ARAR?[4]	Action (Compliance Status)			
								Preliminary (30%) Design	Intermediate (60%) Design	Pre-Final (90%)/Supplemental 90% Design	Final (100%) Design
27	Federal Location-Specific	Resource Conservation and Recovery Act - 42 USC § 6901, et.seq.; 40 CFR 264.18	ARAR Applicable	These regulations promulgated under RCRA establish Seismic and Floodplain considerations which must be followed for treatment, storage, or disposal facilities constructed, operated, or maintained within certain distances of fault lines and floodplains. Portions of the Topock site are located on or near a 100-year floodplain.	Infrastructure in 100-year floodplain/ regulatory floodway	PG&E	Design submittals	The groundwater remedial facilities are not a permitted RCRA treatment, storage or disposal facility. Seismic load design criteria and geotechnical design criteria are described in Appendix C. The 100-year floodplain is defined in the Flood Insurance Rate Map (FIRM), Panel 5705 of 9400 for San Bernardino County, California and Unincorporated Areas, Revised August 28, 2008. The base flood elevation shown on the current FIRM is 464 at River Mile (RM) 234 of the Colorado River. The effective Flood Insurance Study (FIS) for San Bernardino County lists a regulatory base flood elevation of 463.90. This design uses the more conservative elevation of 464 as the base flood elevation. Wells and pipelines are included in the preliminary (30%) design in areas of the Colorado River floodplain necessary for capture and treatment of the chromium plume. The infrastructure in this preliminary (30%) design (wells, pipes) is mostly outside the 100-year floodplain, see Sheet C-2, well FP-EX-5.	The groundwater remedial facilities are not a permitted RCRA treatment, storage or disposal facility. Seismic load design criteria and geotechnical design criteria are described in Appendix C of this BOD Report for the 60% design. The 100-year floodplain is defined in the Flood Insurance Rate Map (FIRM), Panel 5705 of 9400 for San Bernardino County, California and Unincorporated Areas, Revised August 28, 2008, and Panel 5675 of 6700 for Mohave County, Arizona and Unincorporated Areas, Revised November 18, 2009 (Map Number 04015C5675G). The base flood elevation shown on the current FIRM is 464 at River Mile (RM) 234 of the Colorado River. A review of the Mohave County Flood Insurance Study (FIS) shows that this elevation is specific to the California side of the River only, and is different from information found in the newer FIS for Mohave County, AZ. The effective FIS for San Bernardino County lists a regulatory base flood elevation of 463.90 feet. This design uses the more conservative elevation of 464 feet as the base flood elevation for the project on the California side of the Colorado River. The vertical datum for all flood elevations shown on the San Bernardino County FIRM is NAVD88. The effective FIS for Mohave County lists a regulatory base flood elevation of 465.3 feet NAVD. This is used as the base flood elevation for the project on the Arizona side of the Colorado River. The vertical datum for all flood elevations shown on the Mohave County FIRM is NAVD88.	The groundwater remedial facilities are not a permitted RCRA treatment, storage or disposal facility. Seismic load design criteria and geotechnical design criteria are described in Appendix C of this BOD Report for the 90% design. The 100-year floodplain is defined in the Flood Insurance Rate Map (FIRM), Panel 5705 of 9400 for San Bernardino County, California and Unincorporated Areas, Revised August 28, 2008, and Panel 5675 of 6700 for Mohave County, Arizona and Unincorporated Areas, Revised November 18, 2009 (Map Number 04015C5675G). The base flood elevation shown on the current FIRM is 464 feet at River Mile (RM) 234 of the Colorado River. A review of the Mohave County Flood Insurance Study (FIS) shows that this elevation is specific to the California side of the River only, and is different from information found in the newer FIS for Mohave County, AZ. The effective FIS for San Bernardino County lists a regulatory base flood elevation of 463.90 feet. This design uses the more conservative elevation of 464 feet as the base flood elevation for the project on the California side of the Colorado River. The vertical datum for all flood elevations shown on the San Bernardino County FIRM is NAVD88. The effective FIS for Mohave County lists a regulatory base flood elevation of 465.3 feet NAVD. This is used as the base flood elevation for the project on the Arizona side of the	The groundwater remedial facilities are not a permitted RCRA treatment, storage or disposal facility. Seismic load design criteria and geotechnical design criteria are described in Appendix C of this BOD Report for the final design. The 100-year floodplain is defined in the Flood Insurance Rate Map (FIRM), Panel 5705 of 9400 for San Bernardino County, California and Unincorporated Areas, Revised August 28, 2008, and Panel 5675 of 6700 for Mohave County, Arizona and Unincorporated Areas, Revised November 18, 2009 (Map Number 04015C5675G). The base flood elevation shown on the current FIRM is 464 feet at River Mile (RM) 234 of the Colorado River. A review of the Mohave County Flood Insurance Study (FIS) shows that this elevation is specific to the California side of the River only, and is different from information found in the newer FIS for Mohave County, AZ. The effective FIS for San Bernardino County lists a regulatory base flood elevation of 463.90 feet. This design uses the more conservative elevation of 464 feet as the base flood elevation for the project on the California side of the Colorado River. The vertical datum for all flood elevations shown on the San Bernardino County FIRM is NAVD88. The effective FIS for Mohave County lists a regulatory base flood elevation of 465.3 feet NAVD. This is used as the base flood elevation for the project on the Arizona side of the

TABLE L1.1-3
Summary of Compliance with Identified ARARs
Groundwater Remedy Basis of Design Report/Final (100%) Design
PG&E Topock Compressor Station, Needles, California

Item No.[1]	Category[1]	Citation[1,2]	Determination[1,2]	Description in DOI's ARARs Table[1,2]	Triggering Event	Compliance Responsibility	Which existing/ future document(s) will document continued compliance with this ARAR?[4]	Action (Compliance Status)			
								Preliminary (30%) Design	Intermediate (60%) Design	Pre-Final (90%)/Supplemental 90% Design	Final (100%) Design
									In this 60% design, certain infrastructure (piping) cannot be located outside of the 100-year floodplain as defined by the above baseline flood elevation. PG&E will work with San Bernardino County and the Mohave County Flood Administrator to ensure compliance with the county requirements for construction in the floodplain.	Colorado River. The vertical datum for all flood elevations shown on the Mohave County FIRM is NAVD88. In the 90% design, certain infrastructure (piping) cannot be located outside of the 100-year floodplain as defined by the above baseline flood elevation. PG&E has worked with the Mohave County Flood Administrator to ensure compliance with the county requirements for construction in the floodplain.	Colorado River. The vertical datum for all flood elevations shown on the Mohave County FIRM is NAVD88. In the final design, certain infrastructure (piping) cannot be located outside of the 100-year floodplain as defined by the above baseline flood elevation. PG&E has worked with the Mohave County Flood Administrator to ensure compliance with the county requirements for construction in the floodplain.
43	Arizona Location-Specific	Archeological Discoveries - A.R.S. § 41-841 through 847	ARAR	This Act prohibits any person from knowingly excavating on Arizona State or State agency owned land which is a historic or prehistoric ruin, burial ground, archaeological or paleontological site. These requirements will apply if the selected remedy involves excavation in Arizona.	Only if remedy in Arizona - Discovery of any archaeological, paleontological or historical site or object (including human remains) that is at least fifty years old	PG&E	PA, CHPMP, Construction/ Remedial Action Work Plan	Requirements from the PA and the forthcoming CHPMP (led by BLM) will be adhered to during implementation of the remedy. PG&E will prepare and submit the Construction/Remedial Action Work Plan.	Requirements from the PA and the CHPMP (led by BLM) will be adhered to during implementation of the remedy. PG&E will prepare and submit the Construction/Remedial Action Work Plan as part of the 90% design.	Requirements in the PA and the CHPMP will be adhered to. These requirements include implementation of mitigation measures identified in the PA and the CHPMP and through ongoing consultation activities with the Tribes that will avoid, mitigate, or otherwise minimize adverse effects from the undertaking. Tables 6.2-2 and 6.2-3 summarize actions by PG&E to implement the applicable provisions under the PA and the CHPMP. The Construction/Remedial Action Work Plan was prepared and submitted concurrently with the 90% design on September 8, 2014.	Requirements in the PA and the CHPMP will be adhered to. These requirements include implementation of mitigation measures identified in the PA and the CHPMP and through ongoing consultation activities with the Tribes that will avoid, mitigate, or otherwise minimize adverse effects from the undertaking. Tables 6.2-2 and 6.2-3 summarize actions by PG&E to implement the applicable provisions under the PA and the CHPMP. Additionally, treatment measures are included in a Cultural and Historic Property Treatment Plan that was submitted to DTSC, BLM, and DOI shortly after the 90% design submittal, and will be adhered to. The Construction/Remedial Action Work Plan was prepared and submitted concurrently with the final design on November 18, 2015.

TABLE L1.1-3
Summary of Compliance with Identified ARARs
Groundwater Remedy Basis of Design Report/Final (100%) Design
PG&E Topock Compressor Station, Needles, California

Item No.[1]	Category[1]	Citation[1,2]	Determination[1,2]	Description in DOI's ARARs Table[1,2]	Triggering Event	Compliance Responsibility	Which existing/ future document(s) will document continued compliance with this ARAR?[4]	Action (Compliance Status)			
								Preliminary (30%) Design	Intermediate (60%) Design	Pre-Final (90%)/Supplemental 90% Design	Final (100%) Design
44	Arizona Location-Specific	Historic Preservation - A.R.S. § 41-865	ARAR	This Act restricts any person from disturbing human remains or funerary objects on lands other than lands[2] owned or controlled by the State. These requirements will apply if the selected remedy involves excavation in Arizona.	Only if remedy in Arizona on private lands - Discovery of human remains/funerary objects	PG&E	PA	Requirements from the PA and the forthcoming CHPMP will be adhered to during implementation of the remedy.	Requirements from the PA and the CHPMP will be adhered to during implementation of the remedy.	Requirements in the PA and the CHPMP will be adhered to. These requirements include implementation of mitigation measures identified in the PA and the CHPMP and through ongoing consultation activities with the Tribes that will avoid, mitigate, or otherwise minimize adverse effects from the undertaking. Tables 6.2-2 and 6.2-3 summarize actions by PG&E to implement the applicable provisions under the PA and the CHPMP.	Requirements in the PA and the CHPMP will be adhered to. These requirements include implementation of mitigation measures identified in the PA and the CHPMP and through ongoing consultation activities with the Tribes that will avoid, mitigate, or otherwise minimize adverse effects from the undertaking. Tables 6.2-2 and 6.2-3 summarize actions by PG&E to implement the applicable provisions under the PA and the CHPMP. Additionally, treatment measures are included in a Cultural and Historic Property Treatment Plan that was submitted to DTSC, BLM, and DOI shortly after the 90% design submittal, and will be adhered to.
63	California Location-Specific	Seismic and Floodplain standards -Title 22, CCR, Div 4.5, Ch 14, Article 2, §66264.18	ARAR Relevant and Appropriate	These standards are relevant and appropriate for TSD facilities constructed, operated, or maintained within certain distances of fault lines, floodplains, or the maximum high tide.	Infrastructure in 100-year floodplain/ regulatory floodway	PG&E	Design submittals, Construction/ Remedial Action Work Plan	The groundwater remedial facilities are not a permitted RCRA treatment, storage or disposal facility. Seismic load design criteria and geotechnical design criteria are described in Appendix C. The 100-year floodplain is defined in the Flood Insurance Rate Map (FIRM), Panel 5705 of 9400 for San Bernardino County, California and Unincorporated Areas, Revised August 28, 2008. The base flood elevation shown on the current FIRM is 464 at River Mile (RM) 234 of the Colorado River. The effective Flood Insurance Study (FIS) for San Bernardino County lists a regulatory base flood elevation of 463.90. This design uses the more conservative elevation of 464 as the base flood elevation. Wells and pipelines are included in the preliminary (30%) design in areas of the Colorado River floodplain necessary for capture and treatment of the chromium plume. The infrastructure in this preliminary (30%) design (wells, pipes) is mostly	The groundwater remedial facilities are not a permitted RCRA treatment, storage or disposal facility. Seismic load design criteria and geotechnical design criteria are described in Appendix C of the BOD report for the 60% design. The 100-year floodplain is defined in the FIRM, Panel 5705 of 9400 for San Bernardino County, California and Unincorporated Areas, Revised August 28, 2008. The base flood elevation shown on the current FIRM is 464 at RM 234 of the Colorado River. The effective FIS for San Bernardino County lists a regulatory base flood elevation of 463.90 feet. The vertical datum for all flood elevations shown on the San Bernardino County FIRM is NAVD88. This design uses the more conservative elevation of 464 feet as the base flood elevation.	The groundwater remedial facilities are not a permitted RCRA treatment, storage or disposal facility. Seismic load design criteria and geotechnical design criteria are described in Appendix C of the BOD report for the 90% design. The 100-year floodplain is defined in the FIRM, Panel 5705 of 9400 for San Bernardino County, California and Unincorporated Areas, Revised August 28, 2008. The base flood elevation shown on the current FIRM is 464 feet at RM 234 of the Colorado River. The effective FIS for San Bernardino County lists a regulatory base flood elevation of 463.90 feet. The vertical datum for all flood elevations shown on the San Bernardino County FIRM is NAVD88. This design uses the more conservative elevation of 464	The groundwater remedial facilities are not a permitted RCRA treatment, storage or disposal facility. Seismic load design criteria and geotechnical design criteria are described in Appendix C of the BOD report for the final design. The 100-year floodplain is defined in the FIRM, Panel 5705 of 9400 for San Bernardino County, California and Unincorporated Areas, Revised August 28, 2008. The base flood elevation shown on the current FIRM is 464 feet at RM 234 of the Colorado River. The effective FIS for San Bernardino County lists a regulatory base flood elevation of 463.90 feet. The vertical datum for all flood elevations shown on the San Bernardino County FIRM is NAVD88. This design uses the more conservative elevation of 464

TABLE L1.1-3
Summary of Compliance with Identified ARARs
Groundwater Remedy Basis of Design Report/Final (100%) Design
PG&E Topock Compressor Station, Needles, California

Item No.[1]	Category[1]	Citation[1,2]	Determination[1,2]	Description in DOI's ARARs Table[1,2]	Triggering Event	Compliance Responsibility	Which existing/ future document(s) will document continued compliance with this ARAR?[4]	Action (Compliance Status)			
								Preliminary (30%) Design	Intermediate (60%) Design	Pre-Final (90%)/Supplemental 90% Design	Final (100%) Design
								outside the 100-year floodplain, see Sheet C-2, well FP-EX-5.	In this 60% design, certain infrastructure (piping) cannot be located outside of 100-year floodplain as defined by the above baseline flood elevation. PG&E will work with San Bernardino County and Mohave County Flood Administrator to ensure compliance with the county requirements for construction in the floodplain.	feet as the base flood elevation. In the 90% design, certain infrastructure (piping) cannot be located outside of the 100-year floodplain as defined by the above baseline flood elevation. PG&E has worked with the Mohave County Flood Administrator to ensure compliance with the county requirements for construction in the floodplain.	feet as the base flood elevation. In the final design, certain infrastructure (piping) cannot be located outside of the 100-year floodplain as defined by the above baseline flood elevation. PG&E has worked with the Mohave County Flood Administrator to ensure compliance with the county requirements for construction in the floodplain.

Notes:
[1] Source: Table 2 of the Groundwater Record of Decision, Pacific Gas and Electric Company Topock Compressor Station, Needles, San Bernardino County, California, December 2010 (DOI 2010).
[2] As corrected by the Department of the Interior.
[3] The "action" notation in Location-specific ARARs #5 and 7 refers to the DOI Record of Decision (DOI 2010), surnamed by the Bureaus (BLM, BOR, USFWS) and Bureau of Indian Affairs.
[4] The intent of this column is to identify what current or future document(s) are intended to satisfy this measure and be transparent on future forthcoming documentation. This column is not intended to document compliance with the ARARs.

TABLE L1.1-3A
Information for the Havasu National Wildlife Refuge's Appropriate Use Analysis and Compatibility Determination (AUA/CD)
Groundwater Remedy Basis of Design Report/Final (100%) Design
PG&E Topock Compressor Station, Needles, California

Items listed in DOI's October 23, 2008 letter *"PG&E Topock Compressor Station Remediation Site – Evaluation of Attainment of Fish and Wildlife Service Location-Specific ARARs for the Proposed Remedial Alternatives"*	**Action (Compliance Status)**	
	90%/Supplemental 90% Design	**Final (100%) Design**
What the proposed actions/facilities are – including specifics (such as how many wells, the spacing of wells, detailed sizes/lengths of facilities, etc.)	The 90% and Supplemental 90% design were submitted to DOI on September 8, 2014 and February 5, 2015, respectively. Section ES. 3 and Table ES-1 (Summary of Engineering Design Parameters and Key features) of the 90% BOD report provide an executive summary and high level description of the remedy features (wells, pipelines, supporting systems and utilities, structures/buildings, access roads, etc.) including references to specific report figures that show the locations of these features. Detailed descriptions of the remedy features are provided throughout the BOD report, specifically: • Section 3.2 describes the in-situ remediation system and its configuration including the IRZ wells, the River Bank Extraction Wells, the Inner Recirculation Loop wells, the TCS Recirculation Loop wells, the Freshwater Injection Wells, and the associated pipeline alignment. • Section 3.3 describes the freshwater source, the contingent arsenic treatment system, and freshwater piping conveyance including storage. • Section 3.4 describes the remedy-produced water management system. • Section 3.5 describes the utilities and other supporting facilities including power supply, SCADA, and structures/buildings to support the remedy. • Section 3.6 describes the monitoring network/wells. • Section 5 describes the ICs which are also required components of the remedy. Additional details were provided for select remedy components in the Supplemental 90% submittal.	The final design was submitted to DOI on November 18, 2015. Section ES. 3 and Table ES-1 (Summary of Engineering Design Parameters and Key Features) of this Final BOD report provide an executive summary and high level description of the remedy features (wells, pipelines, supporting systems and utilities, structures/buildings, access roads, etc.) including references to specific report figures that show the locations of these features. Detailed descriptions of the remedy features are provided throughout the BOD report, specifically: • Section 3.2 describes the in-situ remediation system and its configuration including the IRZ wells, the River Bank Extraction Wells, the Inner Recirculation Loop wells, the TCS Recirculation Loop wells, the Freshwater Injection Wells, and the associated pipeline alignment. • Section 3.3 describes the freshwater source, the contingent arsenic treatment system, and freshwater piping conveyance including storage. • Section 3.4 describes the remedy-produced water management system. • Section 3.5 describes the utilities and other supporting facilities including power supply, SCADA, and structures/buildings to support the remedy. • Section 3.6 describes the monitoring network/wells. • Section 5 describes the ICs which are also required components of the remedy.
Where the use would be conducted – including specific areas of use, habitat types and acres, key wildlife species that occur there, proportion of refuge or habitat type involved, and other areas affected incidental to use – provide in site maps	Section 2.4 (Other Site Conditions Affecting Design) of the 90% BOD report describes the baseline site conditions that affect remedy design. Among the documented conditions related to ecological resources at the site are surface water quality, USACE/CDFW jurisdictional waters and wetlands, vegetation communities, special status plants, and special status wildlife, avian, and aquatic species. Select maps were provided in Section 2.4 that overlays the remedy features on surveyed ecological resources.	Section 2.4 (Other Site Conditions Affecting Design) of this Final BOD report describes the baseline site conditions that affect remedy design. Among the documented conditions related to ecological resources at the site are surface water quality, USACE/CDFW jurisdictional waters and wetlands, vegetation communities, special status plants, and special status wildlife, avian, and aquatic species. Select maps were provided in Section 2.4 that overlay the remedy features on surveyed ecological resources.
When the use would be conducted—including time of day and year; duration of use; and a timeline of implementing, performing/ maintaining, and closing out the actions/facilities	An estimated project schedule is included in Exhibit 7.5-1 in Section 7.5. Exhibit 7.5-1 provides an estimated timeline for implementing the remedial action through remedy start-up and start of full remedy operations (anticipated June 2019). Consistent with the CMS/FS and Agencies Decision Documents (ROD, Statement of Basis), it is anticipated that this remedy could require 30 years of operations on refuge lands. Per the November 20, 2013 State Water Resources Control Board letter, monitoring on refuge land will be required in order to demonstrate that the water quality objective for arsenic in the receiving groundwater is met "within the earlier of (i) 20 years after achieving the remedial action objective for chromium or (ii) 20 years after ceasing injection of the water containing naturally occurring arsenic at concentrations above the water quality objective." After the remedial action is complete, the remedy facilities will be decommissioned.	An estimated project schedule is included in Exhibit 7.5-1 in Section 7.5. Exhibit 7.5-1 provides an estimated timeline for implementing the remedial action through remedy start-up and start of full remedy operations (anticipated June 2019). Consistent with the CMS/FS and Agencies Decision Documents (ROD, Statement of Basis), it is anticipated that this remedy could require 30 years of operations on refuge lands. Per the November 20, 2013 State Water Resources Control Board letter, monitoring on refuge land will be required in order to demonstrate that the water quality objective for arsenic in the receiving groundwater is met "within the earlier of (i) 20 years after achieving the remedial action objective for chromium or (ii) 20 years after ceasing injection of the water containing naturally occurring arsenic at concentrations above the water quality objective." After the remedial action is complete, the remedy facilities will be decommissioned.
How the use would be conducted—including techniques and equipment used, the number of people involved, routine operation and maintenance procedures	O&M procedures are described in Volume 1 of the Draft O&M Manual (Appendix L of the 90% BOD Report). Details related to construction of the remedy are included in the Construction/Remedial Action Work Plan, submitted concurrently with the 90% design.	O&M procedures are described in Volume 1 of the O&M Manual (Appendix L of this Final BOD Report). Details related to construction of the remedy are included in the Construction/Remedial Action Work Plan, submitted concurrently with the final design.

TABLE L1.1-3A
Information for the Havasu National Wildlife Refuge's Appropriate Use Analysis and Compatibility Determination (AUA/CD)
Groundwater Remedy Basis of Design Report/Final (100%) Design
PG&E Topock Compressor Station, Needles, California

Items listed in DOI's October 23, 2008 letter *"PG&E Topock Compressor Station Remediation Site – Evaluation of Attainment of Fish and Wildlife Service Location-Specific ARARs for the Proposed Remedial Alternatives"*	**Action (Compliance Status)**	
	90%/Supplemental 90% Design	**Final (100%) Design**
What would be the anticipated impacts—identifying and describing the impacts; citing available sources of information (plans, environmental assessments, narratives, research, state plans, field experience, consultation with others); distinguishing between long-term and short-term impacts; documenting direct, indirect, and cumulative impacts on refuge resources	Section 2.4 (Other Site Conditions Affecting Design) of the 90% BOD report describes the baseline site conditions that affect remedy design. Among the documented conditions related to ecological resources at the site are surface water and wetlands, vegetation communities, special status plants, and special status wildlife, avian, and aquatic species. PG&E, USFWS, and DOI coordinated on the Programmatic Biological Assessment (PBA) for the final groundwater remedy. The Final Groundwater Remedy PBA (CH2M HILL 2014k) was prepared to support informal consultations for actions to be conducted under the remedial action, including activities located on BLM and U.S. Fish and Wildlife Service administered lands. This ESA Section 7 consultation was concluded with receipt of USFWS's concurrence letter on July 7, 2014 which preceded the approval of the Construction/Remedial Action Work Plan. Measures outlined in the PBA and associated USFWS determination will be implemented before and during construction activities. Biological completion reports will be submitted to USFWS documenting areas of impacts and monitoring of construction activities. Impact analyses for proposed construction and operation activities are described in the Final Groundwater Remedy PBA (CH2M HILL 2014k) for the action area, and also in the Habitat Restoration Plans for the HNWR lands (CH2M HILL 2014n) and for Riparian Vegetation and Other Sensitive Habitats (CH2M HILL 2014o) (these plans are included as appendices to the Construction/Remedial Action Work Plan). Impacts analysis are also described in the EIR Section 4.3.3.3 and include: BIO-1 – Potential Fill of Wetlands and Other Waters of the U.S. or removal of Riparian Habitat; BIO-2 – Direct Disturbance of and Loss of Habitat for Special-Status Birds and Desert Tortoise; and BIO-3 – Fish Mortality, Interference with Spawning Habitat, and Other Adverse Effects. Of these, only BIO-1 and BIO-2 are related to the proposed activities. The certified EIR summarizes results from site-specific surveys that were conducted for Southwestern willow flycatcher, Mojave desert tortoise, Yuma clapper rail, and other avian species which were also identified during these surveys. Implementation of the EIR mitigation measures would reduce all of these impacts to a less-than-significant level. Subsequent studies have been conducted to document the type and extent of jurisdictional wetlands and waters of the U.S. (Wetland Delineation Report, Aug 2013); as well as the type and location of rare and protected plants (Floristic Survey Report, Aug 2013) and culturally significant plants (Ethnobotany Survey Report, Aug 2013). Additional surveys for lycium and arrowweed were conducted in response to comment #311 DOI-140. Potential impacts to sensitive resources during remedy implementation will be documented as required by the EIR. Additionally, applicable cultural resource mitigation measures included in the Programmatic Agreement (PA) (BLM 2010), Cultural and Historic Properties Management Plan (CHPMP), Cultural Impact Mitigation Program (CIMP), and the EIR Section 4.4 are being and will continue to be implemented to avoid, minimize, or mitigate adverse effects to cultural and historic properties on refuge land.	Section 2.4 (Other Site Conditions Affecting Design) of this Final BOD report describes the baseline site conditions that affect remedy design. Among the documented conditions related to ecological resources at the site are surface water and wetlands, vegetation communities, special status plants, and special status wildlife, avian, and aquatic species. PG&E, USFWS, and DOI coordinated on the Programmatic Biological Assessment (PBA) for the final groundwater remedy. The Final Groundwater Remedy PBA (CH2M HILL 2014k) was prepared to support informal consultations for actions to be conducted under the remedial action, including activities located on BLM and U.S. Fish and Wildlife Service administered lands. This ESA Section 7 consultation was concluded with receipt of USFWS's concurrence letter on July 7, 2014 which preceded the approval of the Construction/Remedial Action Work Plan. Measures outlined in the PBA and associated USFWS determination will be implemented before and during construction activities. Biological completion reports will be submitted to USFWS documenting areas of impacts and monitoring of construction activities. Impact analyses for proposed construction and operation activities are described in the Final Groundwater Remedy PBA (CH2M HILL 2014k) for the action area, and also in the Habitat Restoration Plans for the HNWR lands (CH2M HILL 2015g) and for Riparian Vegetation and Other Sensitive Habitats (CH2M HILL 2014o) (these plans are included as appendices to the Construction/Remedial Action Work Plan). Impacts analysis are also described in the EIR Section 4.3.3.3 and include: BIO-1 – Potential Fill of Wetlands and Other Waters of the U.S. or removal of Riparian Habitat; BIO-2 – Direct Disturbance of and Loss of Habitat for Special-Status Birds and Desert Tortoise; and BIO-3 – Fish Mortality, Interference with Spawning Habitat, and Other Adverse Effects. Of these, only BIO-1 and BIO-2 are related to the proposed activities. The certified EIR summarizes results from site-specific surveys that were conducted for southwestern willow flycatcher, Mojave desert tortoise, Yuma clapper rail, and other avian species which were also identified during these surveys. Implementation of the EIR mitigation measures would reduce all of these impacts to a less-than-significant level. Subsequent studies have been conducted to document the type and extent of jurisdictional wetlands and waters of the U.S. (Wetland Delineation Report, Aug 2013); as well as the type and location of rare and protected plants (Floristic Survey Report, Aug 2013) and culturally significant plants (Ethnobotany Survey Report, Aug 2013). Additional surveys for lycium and arrowweed were conducted in response to comment #311 DOI-140. Potential impacts to sensitive resources during remedy implementation will be documented as required by the EIR. Additionally, applicable cultural resource mitigation measures included in the Programmatic Agreement (PA) (BLM 2010), Cultural and Historic Properties Management Plan (CHPMP), Cultural Impact Mitigation Program (CIMP), and the EIR Section 4.4 are being and will continue to be implemented to avoid, minimize, or mitigate adverse effects to cultural and historic properties on refuge land.
What mitigation is planned for loss of functional value of refuge while use is in operation	The Construction/Remedial Action Work Plan includes a Habitat Restoration Plan in compliance with the CD, Appendix C (Scope of Work), Article 3. This plan has been prepared to provide information requested by the HNWR for its Appropriate Use Analysis and Compatibility Determination (AUA/CD) regarding planned mitigation for potential loss of functional value of refuge while use is in operation.	The Construction/Remedial Action Work Plan includes a Habitat Restoration Plan in compliance with the CD, Appendix C (Scope of Work), Article 3. This plan has been prepared to provide information requested by the HNWR for its Appropriate Use Analysis and Compatibility Determination (AUA/CD) regarding planned mitigation for potential loss of functional value of refuge while use is in operation.

TABLE L1.1-3A
Information for the Havasu National Wildlife Refuge's Appropriate Use Analysis and Compatibility Determination (AUA/CD)
Groundwater Remedy Basis of Design Report/Final (100%) Design
PG&E Topock Compressor Station, Needles, California

Items listed in DOI's October 23, 2008 letter *"PG&E Topock Compressor Station Remediation Site – Evaluation of Attainment of Fish and Wildlife Service Location-Specific ARARs for the Proposed Remedial Alternatives"*	**Action (Compliance Status)**	
	90%/Supplemental 90% Design	**Final (100%) Design**
How and when the actions/facilities would be closed out—including restoration plans	In addition to the Habitat Restoration Plan described above, a Plan for Decommissioning of Remedy Facilities and Restoration will include procedures for the removal and decommissioning of the groundwater remedy. The Plan will also incorporate planning/ approaches for post-remedy restoration (including, but not limited to, a series of photo points). This future Plan will be submitted to DOI within 120 days of DOI's certification of completion of the remedial action and a determination by DOI that removal of such facilities is protective of human health and the environment. In addition to the plans mentioned above, three other restoration plans also pertain to HNWR lands including the Habitat Restoration Plan for Riparian Vegetation and Other Sensitive Habitats (CH2M HILL 2014o), the Aesthetics and Visual Resources Protection and Revegetation Plan (CH2M HILL 2014l), and the Mitigation and Monitoring Plan for Culturally Significant Plants (CH2M HILL 2014p).	In addition to the Habitat Restoration Plan described above, a Plan for Decommissioning of Remedy Facilities and Restoration will include procedures for the removal and decommissioning of the groundwater remedy. The Plan will also incorporate planning/approaches for post-remedy restoration (including, but not limited to, a series of photo points). This future Plan will be submitted to DOI within 120 days of DOI's certification of completion of the remedial action and a determination by DOI that removal of such facilities is protective of human health and the environment. In addition to the plans mentioned above, three other restoration plans also pertain to HNWR lands including the Habitat Restoration Plan for Riparian Vegetation and Other Sensitive Habitats (CH2M HILL 2014o), the Aesthetics and Visual Resources Protection and Revegetation Plan (CH2M HILL 2014l), and the Mitigation and Monitoring Plan for Culturally Significant Plants (CH2M HILL 2014p). Further, Section ES.6 of this Final BOD (Executive Summary) describes the decommissioning process envisioned for the proposed remedy even though it is understood that the detailed decommissioning plan will be prepared much later in the remedial process. In compliance with the Agencies' April 4, 2014 directive letter (DTSC and DOI 2014), PG&E has and will continue to reiterate its commitment to remove all underground utilities and infrastructures to the extent practicable at the time of remedy decommissioning. Section ES.6 includes a conceptual list of remedy components that PG&E believes cannot or should not be removed at the end of the remedy (note that this list is based on current information and may be subject to change): • Freshwater pipeline (and casing) under I-40; • Piping/conduits located in (e.g., direct buried or in trenches) or under (e.g., jack and bore) paved, public roadways; and • Subsurface infrastructure that property owner(s) or land manager(s) request not to be removed, and such request is approved by DTSC and DOI. In addition, as directed by DTSC and DOI in the final design directives (DTSC and DOI 2015), PG&E will work with the landowners to incorporate their preference at the time of decommissioning for removal of infrastructures or abandonment in place. It is noted that the Agencies' preference is to remove infrastructure.
What contingency plans will be in place—identifying actions that will be taken should an accident, unintended discharge, etc. occur.	Contingency Plans are described in Volume 3 of the O&M Manual of the 90% BOD report. Additional details on Contingency Plans for the Remedy Construction are included in the Construction/Remedial Action Work Plan.	Contingency Plans are described in Volume 3 of the O&M Manual of this Final BOD report. Additional details on Contingency Plans for the Remedy Construction are included in the Construction/Remedial Action Work Plan.

TABLE L1.1-4
Summary of Compliance with Applicable Programmatic Agreement (PA) Stipulations
Groundwater Remedy Basis of Design Report/Final (100%) Design
PG&E Topock Compressor Station, Needles, California

Item No.	Reference Location in PA Document	Relevant Excerpt from Document	Triggering Event	Action (Compliance Status)		
				Intermediate (60%) Design	Pre-Final (90%)/Supplemental 90% Design	Final (100%) Design
1	Stipulation I(A)	The Federal Agencies, in consultation with the Tribes, SHPOs, ACHP, PG&E, and other interested parties, agree to select and implement, or cause to be implemented, an alternative or combination of alternatives to remediate the groundwater and soil contamination in a manner that fulfills the requirements of CERCLA and the CERCLA Records of Decision (RODs) and protects the Colorado River, human populations, and the natural environment to the maximum extent practicable.	Implementation of Selected Groundwater Remedy	PG&E is implementing the groundwater remedy selected by DOI and DTSC.	PG&E is implementing the groundwater remedy selected by DOI and DTSC.	PG&E is implementing the groundwater remedy selected by DOI and DTSC.
2	Stipulation I(B)	The Federal Agencies, in consultation with the Tribes, SHPOs, ACHP, PG&E, and other interested parties, agree to Subject to I(A) above, carry out, and require others under their jurisdiction to carry out, all investigative, testing and remediation activities, including all supporting operations and maintenance activities, in ways that avoid, minimize, or mitigate adverse effects to cultural and historic properties within the APE, to the maximum extent practicable.	Implementation of Selected Groundwater Remedy	PG&E remediation resources specialist (Glenn Caruso) participated in field reviews of planned remedial facilities with the design team on April 23-24 and June 20, 2012. The purpose of these field reviews along with the ongoing in office reviews is to ensure that the footprints of planned facilities are designed in ways to avoid, minimize, or mitigate impacts on historical and archaeological resources to the maximum extent feasible.	PG&E Cultural Resources Expert (Glenn Caruso) participated in field reviews of planned remedial facilities with the design team on April 7-10, 2014. The purpose of these field reviews along with the ongoing in office reviews is to ensure that the footprints of planned facilities are designed in ways to avoid, minimize, or mitigate impacts on historical and archaeological resources to the maximum extent feasible.	PG&E Cultural Resources Expert Glenn Caruso participated in field review of planned remedial facilities and temporary construction footprints at Moabi Regional Park in late 2014 and early 2015. Glenn Caruso also led in-office review of planned facilities and temporary construction-related footprints in September 2015. The purpose of the field review along with in-office reviews is to ensure that project footprints are designed in ways to avoid and minimize impacts on historical and archaeological resources to the maximum extent feasible.
3	Stipulation I(C)	The BLM, USFWS, USBR and PG&E shall consult with the Tribes that attach cultural significance to the TCP within the APE to develop a plan to ensure Tribal access to areas within the APE for religious, cultural, or spiritual purposes. Access shall be consistent with applicable laws, regulations and agreements governing property within the APE and may not impede the Topock Remediation Project, may not create health and safety concerns, and shall exclude the Topock Compressor Station and related facilities.	Development of Access Plan (Tribal Access)	The Tribal Access Plan for lands under federal management was completed on November 26, 2011. PG&E has initiated work on an Access Plan for the lands not under federal management, taking into consideration the information in the BLM Access Plan, for submittal with the final design (target 2013).	The Tribal Access Plan for lands under federal management was completed on November 26, 2011. PG&E has prepared an Access Plan in coordination with Tribes, for the lands not under federal management, taking into consideration the information in the BLM Access Plan. The Access Plan is included in an appendix of the Construction/Remedial Action Work Plan and submitted on September 8, 2014.	The Tribal Access Plan for lands under federal management was completed on November 26, 2011. PG&E has prepared an Access Plan in coordination with Tribes, for the lands not under federal management, taking into consideration the information in the BLM Access Plan. The Access Plan is included in an appendix of the Construction/Remedial Action Work Plan and submitted on November 18, 2015.
4	Stipulation I(D)	The Federal Agencies, in consultation with the Tribes, SHPOs, ACHP, PG&E, and other interested parties, agree to ensure that PG&E shall to the extent practicable restore the areas affected by the Topock Remediation Project within the APE, including, but not limited to, the site of the existing treatment plant and related facilities but excluding the Topock Compressor Station and related facilities, to the conditions existing prior to the construction of the PG&E investigation and remediation related appurtenances and facilities.	Planning for Restoration	The plan for the decommissioning and removal of the IM-3 Facility and Site Restoration will be included as an appendix to the CIMP, which will be submitted with the 90% Design.	The plan for the decommissioning and removal of the IM-3 Facility and Site Restoration was prepared and submitted as Appendix B of the CIMP and also as an appendix of the Construction/Remedial Action Work Plan. Section 8 of the Plan includes restoration guidelines (steps to be followed during restoration), elements of the restoration of habitat and revegetation and demobilization, and a draft annotated outline of a future more detailed, site specific IM-3 Restoration Plan. In coordination with the FMIT and other Tribes, PG&E has developed a schedule for developing the more detailed Restoration Plan. PG&E anticipates that some details of the restoration plan, in particular the amount of earthwork and earth movement involved in the restoration, will be deferred to the completion of decommissioning, so that PG&E and the Tribes can evaluate which approach may minimize further disturbance (and may minimize the amount of earth movement) while achieving the required restoration.	The plan for the decommissioning and removal of the IM-3 Facility and Site Restoration was prepared and submitted as Appendix B of the CIMP and also as an appendix of the Construction/Remedial Action Work Plan. Section 8 of the Plan includes restoration guidelines (steps to be followed during restoration), elements of the restoration of habitat and revegetation and demobilization, and a draft annotated outline of a future more detailed, site specific IM-3 Restoration Plan. In coordination with the FMIT and other Tribes, PG&E has developed a schedule for developing the more detailed Restoration Plan. PG&E anticipates that some details of the restoration plan, in particular the amount of earthwork and earth movement involved in the restoration, will be deferred to the completion of decommissioning, so that PG&E and the Tribes can evaluate which approach may minimize further disturbance (and may minimize the amount of earth movement) while achieving the required restoration.

TABLE L1.1-4
Summary of Compliance with Applicable Programmatic Agreement (PA) Stipulations
Groundwater Remedy Basis of Design Report/Final (100%) Design
PG&E Topock Compressor Station, Needles, California

Item No.	Reference Location in PA Document	Relevant Excerpt from Document	Triggering Event	Action (Compliance Status)		
				Intermediate (60%) Design	Pre-Final (90%)/Supplemental 90% Design	Final (100%) Design
4	Stipulation I(E)	The Federal Agencies, in consultation with the Tribes, SHPOs, ACHP, PG&E, and other interested parties, agree to consult with other Signatories, Tribes and Invited Signatories, following the guidelines in Appendix B of this PA, regarding actions proposed in this Undertaking, including establishment of any rights of way, time critical or emergency actions.	Groundwater Remedy Design and Implementation	BLM has consulted and is continuing to consult with the Tribes regarding the design under the PA's Consultation Protocol.	BLM has consulted and is continuing to consult with the Tribes regarding the design under the PA's Consultation Protocol.	BLM has consulted and is continuing to consult with the Tribes regarding the design under the PA's Consultation Protocol.
5	Stipulation II(B)	At each phase (work plan or design document) of implementation of the Undertaking, an evaluation will occur to determine if the APE should be amended. This evaluation will coincide with the development of the work plan or design document for the specific phase of the Undertaking. Where alternatives under consideration consist of corridors or large land areas, or where access to properties is restricted, the agency official may use a phased process to conduct identification and evaluation efforts (36 CFR §800.4(b)(2)). Prior to implementation of each phase (work plan or design document) of the Undertaking, BLM will determine, in consultation with the AZ SHPO, CA SHPO, Tribes, and PG&E, what, if any, changes are required in the APE. If BLM determines that the APE must be revised, BLM will redefine the APE taking the input from those parties into account. Should such revision to the APE be needed, BLM will amend the CHPMP to include any changes to the APE.	Groundwater Remedy Design and Implementation	BLM has consulted and is continuing to consult with the Tribes regarding the design under the PA's Consultation Protocol, including on the APE.	BLM has consulted and is continuing to consult with the Tribes regarding the design under the PA's Consultation Protocol, including on the APE.	BLM has consulted and is continuing to consult with the Tribes regarding the design under the PA's Consultation Protocol, including on the APE.
6	Stipulation III(B)(1), III(B)(2)(a) - Remediation of GW contamination	Should Alt E be selected, the Federal Agencies will ensure that, consistent with the general principals in Stipulation I, existing monitoring wells and related facilities shall be used to the maximum extent practicable.	Implementation of Selected Groundwater Remedy	In the intermediate (60%) design, all existing monitoring wells have been incorporated into the monitoring well network for the remedy, thereby reducing the need for drilling new monitoring wells.	In the pre-final (90%) design, existing monitoring wells have been incorporated into the monitoring well network for the remedy, thereby reducing the need for drilling new monitoring wells.	In the final design, existing monitoring wells have been incorporated into the monitoring well network for the remedy, thereby reducing the need for drilling new monitoring wells.
7	Stipulation III(B)(2)(b) - Remediation of GW contamination	Should Alt E be selected, the Federal Agencies will ensure that, consistent with the general principals in Stipulation I, the need for and placement of any new facilities or activities will be determined in consultation with the Tribes and the Consulting Parties following the guidelines in Appendix B.	Implementation of Selected Groundwater Remedy	The 60% design presented planned facilities and activities for the implementation of the groundwater remedy. BLM has consulted and is continuing to consult with the Tribes regarding the design under the PA's Consultation Protocol.	The 90% design presents planned facilities and activities for the implementation of the groundwater remedy. The Construction/Remedial Action Work Plan includes procedures and protocols to be implemented and contingencies during remedy construction and start-up. The O&M Manual includes procedures for implementation and contingencies during operation and maintenance of the remedy. BLM has consulted and is continuing to consult with the Tribes regarding the design under the PA's Consultation Protocol, and will consult the Tribes on the Construction/Remedial Action Work Plan and O&M Manual.	The final design presents planned facilities and activities for the implementation of the groundwater remedy. The Construction/ Remedial Action Work Plan includes procedures and protocols to be implemented and contingencies during remedy construction and start-up. The O&M Manual includes procedures for implementation and contingencies during operation and maintenance of the remedy. BLM has consulted and is continuing to consult with the Tribes regarding the design and the Construction/Remedial Action Work Plan as well as the O&M Manual under the PA's Consultation Protocol.

TABLE L1.1-4
Summary of Compliance with Applicable Programmatic Agreement (PA) Stipulations
Groundwater Remedy Basis of Design Report/Final (100%) Design
PG&E Topock Compressor Station, Needles, California

Item No.	Reference Location in PA Document	Relevant Excerpt from Document	Triggering Event	Action (Compliance Status)		
				Intermediate (60%) Design	Pre-Final (90%)/Supplemental 90% Design	Final (100%) Design
8	Stipulation III(B)(2)(c) - Remediation of GW contamination	Should Alt E be selected, the Federal Agencies will ensure that, consistent with the general principals in Stipulation I, that new facilities or activities be placed in areas already disturbed by previous grading or other mechanized activities to the maximum extent practicable, consistent with protecting human health and the environment and achieving cleanup in a timely manner.	Implementation of Selected Groundwater Remedy	The design has been and is carried out in a manner that gives: (1) priority to previously disturbed areas for the placement of new physical improvements; and (2) priority to re-use of existing physical improvements, such as but not limited to wells and pipelines, but not including IM-3 facilities. A disturbed area map was prepared in compliance with an EIR mitigation measure (CUL-1a-9), to facilitate placement of infrastructure; a current version of the map is included in Appendix A2 of the 60% Basis of Design (BOD) Report. In addition, in compliance with the directive to give priority to re-use of existing physical improvements and to previously disturbed areas for new physical improvements, the intermediate (60%) design proposes the following: • All existing monitoring wells have been incorporated into the monitoring well network for the remedy, thereby reducing the need for drilling new monitoring wells. • The freshwater supply for the remedy will be the existing HNWR-1 well. • The freshwater supply storage will be the existing water storage tanks at the Compressor Station. • The remedy-produced water treatment plant and freshwater pre-injection treatment system will be located entirely within the footprint of Compressor Station. • The central maintenance facility for the remedy will be located entirely on PG&E property, at the Transwestern Bench. By centralizing maintenance functions into one location, this reduces the footprint of remedy structure outside of PG&E property.	The design has been and is carried out in a manner that gives: (1) priority to previously disturbed areas for the placement of new physical improvements; and (2) priority to re-use of existing physical improvements, such as but not limited to wells and pipelines, but not including IM-3 facilities. A disturbed area map was prepared in compliance with an EIR mitigation measure (CUL-1a-9), to facilitate placement of infrastructure; an updated version of the map is included in Appendix A2 of the 90% Basis of Design (BOD) Report. In addition, in compliance with the directive to give priority to re-use of existing physical improvements and to previously disturbed areas for new physical improvements, the pre-final (90%) design proposes the following: • All existing monitoring wells have been incorporated into the monitoring well network for the remedy, thereby reducing the need for drilling new monitoring wells. • The piping corridor is located almost entirely in existing roadways, right of ways and previously disturbed areas. • Most of the existing access roads have been incorporated into the 90% design. • The remedy-produced water conditioning plant and the contingent systems (arsenic treatment and dissolved metals removal) are located entirely within the footprint of the Compressor Station. • The operation building and carbon storage/amendment facilities are located on the existing Transwestern Bench and MW-20 Bench. • All of the proposed soil storage and construction staging areas are located on previously disturbed areas. • The main construction headquarters and staging area is located on previously disturbed areas at Moabi Regional Park.	The design has been and is carried out in a manner that gives: (1) priority to previously disturbed areas for the placement of new physical improvements; and (2) priority to re-use of existing physical improvements, such as but not limited to wells and pipelines, but not including IM-3 facilities (with the exception of certain IM-3 facilities located at the MW-20 bench, which are being reused for the final remedy). A disturbed area map was prepared in compliance with an EIR mitigation measure (CUL-1a-9), to facilitate placement of infrastructure; an updated version of the map is included in Appendix A2 of this Final BOD Report. In addition, in compliance with the directive to give priority to re-use of existing physical improvements and to previously disturbed areas for new physical improvements, the final design proposes the following: • All existing monitoring wells have been incorporated into the monitoring well network for the remedy, thereby reducing the need for drilling new monitoring wells. • The piping corridor is located almost entirely in existing roadways, right of ways and previously disturbed areas. • Most of the existing access roads have been incorporated into the final design. • The remedy-produced water conditioning plant and the contingent systems (arsenic treatment and dissolved metals removal) are located entirely within the footprint of the Compressor Station. • The operation building is located on the existing Transwestern Bench. • The combined carbon storage/amendment facilities are located on the existing MW-20 Bench. • All of the proposed soil processing and construction staging areas are located on previously disturbed areas. • The main construction headquarters and staging area is located on previously disturbed areas at Moabi Regional Park.

TABLE L1.1-4
Summary of Compliance with Applicable Programmatic Agreement (PA) Stipulations
Groundwater Remedy Basis of Design Report/Final (100%) Design
PG&E Topock Compressor Station, Needles, California

Item No.	Reference Location in PA Document	Relevant Excerpt from Document	Triggering Event	Action (Compliance Status)		
				Intermediate (60%) Design	Pre-Final (90%)/Supplemental 90% Design	Final (100%) Design
9	Stipulation III(B)(2)(e) - Remediation of GW contamination	Should Alt E be selected, the Federal Agencies will ensure that, consistent with the general principals in Stipulation I, the performance of all field activities in support of the remedy shall be executed in such a way as to avoid and/or minimize adverse effects to cultural and historic properties to the maximum extent practicable.	Implementation of Field Activities in Support of the Groundwater Remedy	The planning of field activities is executed under the guidance of PG&E's remediation resources specialist (Glenn Caruso). The implementation of field activities is performed in accordance with approved work plans and under the monitoring of Archaeological Monitor(s). Tribal Monitors are invited to observe ground-disturbing field activities.	The planning of field activities is executed under the guidance of PG&E's Cultural Resources Expert (Glenn Caruso). The implementation of field activities is performed in accordance with approved work plans and under the monitoring of Archaeological Monitor(s). Tribal Monitors are invited to observe ground-disturbing field activities.	The planning of field activities is executed under the guidance of PG&E's Cultural Resources Expert (Glenn Caruso). The implementation of field activities is performed in accordance with approved work plans and under the monitoring of Archaeological Monitor(s). Tribal Monitors are invited to observe ground-disturbing field activities.
10	Stipulation III(B)(2)(f) - Remediation of GW contamination	Should Alt E be selected, the Federal Agencies will ensure that, consistent with the general principals in Stipulation I, subject to Stipulation I(A), direct, indirect and cumulative adverse effects shall be considered and mitigated.	Implementation of Selected Groundwater Remedy	Adverse effects are being considered and mitigated through the implementation of the measures included in the PA, the CHPMP and the EIR.	Adverse effects are being considered and mitigated through the implementation of the measures included in the PA, the CHPMP and the EIR.	Adverse effects are being considered and mitigated through the implementation of the measures included in the PA, the CHPMP, the Cultural and Historic Property Treatment Plan and the EIR.
11	Stipulation III(B)(3)(a) - Remediation of GW contamination – Final Design	Consultation between the Signatories, Tribes and Invited Signatories shall be initiated prior to final design and implementation of that alternative.	Design and Implementation of Selected Groundwater Remedy	BLM has consulted and is continuing to consult with the Tribes regarding the design under the PA's Consultation Protocol.	BLM has consulted and is continuing to consult with the Tribes regarding the design under the PA's Consultation Protocol.	BLM has consulted and is continuing to consult with the Tribes regarding the design and implementation under the PA's Consultation Protocol.
12	Stipulation III(B)(3)(b) - Remediation of GW contamination – Final Design	Every effort should be made to avoid and minimize adverse effects in accordance with the general principles set forth in Stipulation I.	Implementation of Selected Groundwater Remedy	PG&E remediation resources specialist (Glenn Caruso) participated in field reviews of planned remedial facilities with the design team on April 23-24 and June 20, 2012. The purpose of these field reviews along with the ongoing in office reviews is to ensure that the footprints of planned facilities are designed in ways to avoid, minimize, or mitigate impacts on historical and archaeological resources to the maximum extent feasible.	PG&E Cultural Resources Expert (Glenn Caruso) participated in field reviews of planned remedial facilities with the design team on April 7-10, 2014. The purpose of these field reviews along with the ongoing in office reviews is to ensure that the footprints of planned facilities are designed in ways to avoid, minimize, or mitigate impacts on historical and archaeological resources to the maximum extent feasible.	PG&E Cultural Resources Expert Glenn Caruso participated in field review of planned remedial facilities and temporary construction footprints at Moabi Regional Park in late 2014 and early 2015. Glenn Caruso also led in-office review of planned facilities and temporary construction-related footprints in September 2015. The purpose of the field review along with in-office reviews is to ensure that project footprints are designed in ways to avoid and minimize impacts on historical and archaeological resources to the maximum extent feasible.
13	Stipulation III(B)(3)(c) - Remediation of GW contamination	Whatever the selected alternative, the Federal Agencies will consult with all Signatories, Tribes, and Invited Signatories during the design, implementation, and monitoring activities to determine how best to restore the areas affected by the Topock Remediation Project. These areas will include, but not be limited to, the site of the existing treatment plant and related facilities but will exclude the Topock Compressor Station and related facilities. The Federal Agencies will ensure that environmental restoration to the conditions existing prior to the construction of the Project, is planned and conducted to the extent practicable.	Implementation of Selected Groundwater Remedy	The plan for the decommissioning and removal of the IM-3 Facility and Site Restoration will be included as an appendix to the CIMP, which will be submitted with the 90% Design. Additionally, a Plan for Decommissioning of Remedy Facilities and Restoration will be submitted in the future, prior to decommissioning, and BLM will consult the Tribes on this Plan.	The plan for the decommissioning and removal of the IM-3 Facility and Site Restoration was prepared and submitted in Appendix B of the CIMP and also as an appendix of the Construction/Remedial Action Work Plan. A site-specific Plan for Decommissioning and Restoration of remedy facilities will be submitted in the future (within 120 days of DOI's certification of remedial action completion and a determination by DOI that removal of such facilities is protective of human health and the environment), prior to decommissioning, and BLM will consult the Tribes on this Plan.	The plan for the decommissioning and removal of the IM-3 Facility and Site Restoration was prepared and submitted in Appendix B of the CIMP and also as an appendix of the Construction/Remedial Action Work Plan. A site-specific Plan for Decommissioning and Restoration of remedy facilities will be submitted in the future (within 120 days of DOI's certification of remedial action completion and a determination by DOI that removal of such facilities is protective of human health and the environment), prior to decommissioning, and BLM will consult the Tribes on this Plan.

TABLE L1.1-4
Summary of Compliance with Applicable Programmatic Agreement (PA) Stipulations
Groundwater Remedy Basis of Design Report/Final (100%) Design
PG&E Topock Compressor Station, Needles, California

Item No.	Reference Location in PA Document	Relevant Excerpt from Document	Triggering Event	Action (Compliance Status)		
				Intermediate (60%) Design	Pre-Final (90%)/Supplemental 90% Design	Final (100%) Design
14	Stipulation V(A)	All facilities and appurtenances related to the Topock Remediation Project are to be removed as soon as practicable upon attainment of cleanup standards and a determination by DOI that removal of such facilities is protective of human health and the environment. All such removal will be planned in consultation with the Signatories, Tribes, and Invited Signatories, following the guidelines in Appendix B [Consultation Protocol).	Planning for decommissioning	This stipulation will be adhered to in planning for the decommissioning of remedy facilities. Additionally, a Closure Plan for Decommissioning of Remedy Facilities and Restoration will be submitted in the future, prior to decommissioning, and BLM will consult the Tribes on this Plan.	This stipulation will be adhered to in planning for the decommissioning of remedy facilities. A site-specific Plan for Decommissioning and Restoration of remedy facilities will be submitted in the future (within 120 days of DOI's certification of remedial action completion and a determination by DOI that removal of such facilities is protective of human health and the environment), prior to decommissioning, and BLM will consult the Tribes on this Plan.	This stipulation will be adhered to in planning for the decommissioning of remedy facilities. Section ES.6 of this Final BOD (Executive Summary) describes the decommissioning process envisioned for the proposed remedy even though it is understood that the detailed decommissioning plan will be prepared much later in the remedial process. In compliance with the Agencies' April 4, 2014 directive letter (DTSC and DOI 2014), PG&E has and will continue to reiterate its commitment to remove all underground utilities and infrastructures to the extent practicable at the time of remedy decommissioning. Section ES.6 includes a conceptual list of remedy components that PG&E believes cannot or should not be removed at the end of the remedy (note that this list is based on current information and may be subject to change): • Freshwater pipeline (and casing) under I-40; • Piping/conduits located in (e.g., direct buried or in trenches) or under (e.g., jack and bore) paved, public roadways; and • Subsurface infrastructure that property owner(s) or land manager(s) request not to be removed, and such request is approved by DTSC and DOI. Further, in compliance with the Agencies' November 19, 2015 final directives (DTSC and DOI 2015), PG&E will work with the landowners to incorporate their preference at the time of decommissioning for removal of infrastructures or abandonment in place. It is noted that the Agencies' preference is to remove infrastructure. The site-specific Plan for Decommissioning and Restoration of remedy facilities will be submitted in the future (within 120 days of DOI's certification of remedial action completion and a determination by DOI that removal of such facilities is protective of human health and the environment), prior to decommissioning, and BLM will consult the Tribes on this Plan.
15	Stipulation V(B)	The removal of such facilities shall be monitored following the monitoring guidelines in Appendix C.	Planning for decommissioning	This stipulation will be adhered to in planning for the decommissioning of remedy facilities.	This stipulation will be adhered to in planning for the decommissioning of remedy facilities.	This stipulation will be adhered to in planning for the decommissioning of remedy facilities.
16	Stipulation V(C)	The removal of such facilities shall take place along existing graded roads to the maximum extent practicable.	Planning for decommissioning	This stipulation will be adhered to in planning for the decommissioning of remedy facilities.	This stipulation will be adhered to in planning for the decommissioning of remedy facilities.	This stipulation will be adhered to in planning for the decommissioning of remedy facilities.

TABLE L1.1-4
Summary of Compliance with Applicable Programmatic Agreement (PA) Stipulations
Groundwater Remedy Basis of Design Report/Final (100%) Design
PG&E Topock Compressor Station, Needles, California

Item No.	Reference Location in PA Document	Relevant Excerpt from Document	Triggering Event	Action (Compliance Status)		
				Intermediate (60%) Design	Pre-Final (90%)/Supplemental 90% Design	Final (100%) Design
17	Stipulation V(D)	Prior to decommissioning of any remediation facility, the Federal Agencies will consult with all Signatories, Tribes, and Invited Signatories during the development of the closure plan to determine how to best restore the areas affected by the Topock Remediation Project, including but not limited to, the site of the existing treatment plant and related facilities, but excluding the Topock Compressor Station and related facilities, to ensure that environmental restoration of conditions existing prior to the construction of the Project, is achieved to the extent practicable.	Planning for decommissioning	This stipulation will be adhered to in planning for the decommissioning of remedy facilities. The Closure Plan for Decommissioning of Remedy Facilities and Restoration will be submitted in the future, prior to decommissioning, and BLM will consult the Tribes on this Plan.	This stipulation will be adhered to in planning for the decommissioning of remedy facilities. A site-specific Plan for Decommissioning and Restoration of remedy facilities will be submitted in the future (within 120 days of DOI's certification of remedial action completion and a determination by DOI that removal of such facilities is protective of human health and the environment), prior to decommissioning, and BLM will consult the Tribes on this Plan.	This stipulation will be adhered to in planning for the decommissioning of remedy facilities. A site-specific Plan for Decommissioning and Restoration of remedy facilities will be submitted in the future (within 120 days of DOI's certification of remedial action completion and a determination by DOI that removal of such facilities is protective of human health and the environment), prior to decommissioning, and BLM will consult the Tribes on this Plan.
18	Stipulation V(E)	PG&E will draft a plan for decommissioning, removal and restoration of the IM-3 facility prior to implementation of the groundwater remedy, in consultation with all Signatories, Tribes and Invited Signatories.	Groundwater Remedy Design	This stipulation will be adhered to during design. The plan for the decommissioning and removal of the IM-3 Facility and Site Restoration will be included as an appendix to the CIMP, which will be submitted with the 90% Design. The Plan will be drafted in consultation with all Signatories, Tribes and Invited Signatories.	PG&E has developed the plan for the decommissioning and removal of the IM-3 Facility and Site Restoration, in consultation with the Tribes. The Plan was submitted in Appendix B of the CIMP and also as an appendix of the Construction/Remedial Action Work Plan.	PG&E has developed the plan for the decommissioning and removal of the IM-3 Facility and Site Restoration, in consultation with the Tribes. The Plan was submitted in Appendix B of the CIMP and also as an appendix of the Construction/Remedial Action Work Plan.
19	Stipulation IX(A)-(D)	A. If the Undertaking affects a previously unidentified cultural and/or historic resource, including human remains and/or associated funerary objects or graves, or affect such resources in a way not previously anticipated, or have greater adverse effect than previously anticipated, all work in the vicinity of the discovery shall cease. No further action will be taken until the BLM, in consultation with Tribal and Archaeological Monitors and PG&E in the field, has determined the nature of the discovery and delineated an area not to exceed 50 meters from the approximate center point of the discovery (or a smaller or larger areas if warranted by specific circumstances) in which no further work is to take place until treatment of the discovery is resolved. At such point BLM will notify all Signatories, Tribes, and Invited Signatories of the nature and general location of the discovery. The BLM will implement appropriate measures, including stabilization or covering, to protect any discovery (human remains, funerary objects, sacred objects, or objects of cultural patrimony) from further disturbance in accordance with the principles set forth in Stipulation I. Ongoing work not within 50 meters (or a smaller area if determined appropriate by parties in the field) of the discovery may continue. If human remains and/or associated funerary objects compose all or part of the discovery, then BLM shall ensure the stipulations of the POA included in the CHPMP, as described in Stipulation VII (H) hereof, will be completed. Also, if human remains and/or funerary objects are encountered, all activities shall follow the procedures and direction provided in NAGPRA and California Public	Field Implementation of Selected Groundwater Remedy	This stipulation will be adhered to during the field implementation of the Construction/Remedial Action Plan. Tribal monitors will be invited to monitor ground-disturbing field activities. Archaeological monitoring will also be conducted during ground disturbing portions of the project. Applied Earthworks, a professional cultural resources consulting firm, was retained by PG&E with DTSC approval. Applied Earthworks will observe ground-disturbing activities and will have the authority to temporarily divert or halt any activities in the event that previously unidentified potentially significant cultural resources are discovered.	This stipulation will be adhered to during the field implementation of the Construction/Remedial Action Plan and during the operation and maintenance of the remedy. Tribal monitors will be invited to monitor ground-disturbing field activities. Archaeological monitoring will also be conducted during ground disturbing portions of the project. Applied Earthworks, a professional cultural resources consulting firm, was retained by PG&E with DTSC approval. Applied Earthworks will observe ground-disturbing activities and will have the authority to temporarily divert or halt any activities in the event that previously unidentified potentially significant cultural resources are discovered.	This stipulation will be adhered to during the field implementation of the Construction/ Remedial Action Plan and during the operation and maintenance of the remedy. Tribal monitors will be invited to monitor ground-disturbing field activities. Archaeological monitoring will also be conducted during ground disturbing portions of the project. Applied Earthworks, a professional cultural resources consulting firm, was retained by PG&E with DTSC approval. Applied Earthworks will observe ground-disturbing activities and will have the authority to temporarily divert or halt any activities in the event that previously unidentified potentially significant cultural resources are discovered.

TABLE L1.1-4
Summary of Compliance with Applicable Programmatic Agreement (PA) Stipulations
Groundwater Remedy Basis of Design Report/Final (100%) Design
PG&E Topock Compressor Station, Needles, California

Item No.	Reference Location in PA Document	Relevant Excerpt from Document	Triggering Event	Action (Compliance Status)		
				Intermediate (60%) Design	Pre-Final (90%)/Supplemental 90% Design	Final (100%) Design
		Resources Code sections 5097.98 and 5097.991. For Arizona, such activities shall follow the procedures and direction provided in NAGPRA and applicable state laws, including the Arizona Antiquities Act of 1927 (ARS § 41-841 to 41-846), Burial Protection Law of 1990 (ARS §41-865), and ARS §41-844 of 1990.				
20	Stipulation IX(A)-(D) (continued)	B. If the Tribes, PG&E, and BLM can resolve treatment of the discovery in a manner that does not cause adverse effects to significant cultural and historic properties, BLM shall document the resolution, the activities within the work area may proceed and the AZ SHPO and the CA SHPO shall be notified of the discovery and resolution. The Tribes, PG&E, and BLM will use their best efforts to resolve treatment as quickly as possible. C. If there is failure to resolve treatment of the discovery in consultation with the Tribes and PG&E, BLM shall then consult with the AZ SHPO or the CA SHPO to develop a treatment plan that takes into account the effects of the Undertaking on the discovery. Within fifteen (15) days of notification of discovery, BLM shall provide the consulted SHPO(s), via email, a recommendation for resolving the discovery situation that takes into account the potential effects of the Undertaking on the discovery. D. If the CA SHPO or AZ SHPO (as appropriate, depending on the location of the discovery) does not object to BLM's recommendation(s) within fifteen (15) days, BLM will implement the recommendation(s). If the consulted SHPO objects to the recommendation, BLM will utilize the dispute resolution process in Stipulation XV of this PA to resolve any objection.	Field Implementation of Selected Groundwater Remedy	This stipulation will be adhered to during the field implementation of the selected groundwater remedy.	This stipulation will be adhered to during the field implementation of the selected groundwater remedy.	This stipulation will be adhered to during the field implementation of the selected groundwater remedy.
21	Appendix C Monitoring Protocol	Cultural sensitivity training will be required of all staff, workers and contractors engaged in activities in the Topock Remediation Project APE to familiarize them with the sacred nature of the areas so that they will perform their job in a respectful manner. This training will also be given to new personnel before they are allowed to do fieldwork within the APE. This training will be conducted by PG&E with participation by Tribes and Tribal Monitors, Archaeological Monitors, Federal Agency staff, and PG&E supervising staff, as appropriate. Consistent with PG&E's stated policy, PG&E will not tolerate any disrespectful behavior in the field and will remove any staff, workers or contractors who do not comply with this section.	Implementation of Selected Groundwater Remedy	Site orientation and the training on cultural/historical resources sensitivity will be provided at the project initiation meeting, to be held at the Topock Compressor Station. Site orientation will stress that all site activities will be conducted in a respectful manner. Sensitivity training will be provided by PG&E Site Operations Manager, PG&E Remediation Resources Specialist, and PG&E will invite participation from the Tribes, archaeological monitors, and agency staff, as appropriate. In addition, PG&E and Tribes are collaborating on a similar measure under the CIMP, and to produce a training/education manual to educate workers. This CIMP measure was discussed with interested Tribes at the monthly meeting on April 26, 2012, August 23, 2012 and September 19, 2012.	Site orientation and the training on cultural/ historical resources sensitivity will be provided at the project initiation meeting, to be held at the Topock Compressor Station. Site orientation will stress that all site activities will be conducted in a respectful manner. Sensitivity training will be provided by PG&E's Site Operations Manager, and PG&E Cultural Resources Expert. PG&E will invite participation from the Tribes, archaeological monitors, and agency staff, as appropriate.	Site orientation and the training on cultural/ historical resources sensitivity will be provided at the project initiation meeting, to be held at the Topock Compressor Station. Site orientation will stress that all site activities will be conducted in a respectful manner. Sensitivity training will be provided by PG&E's Site Operations Manager, and PG&E Cultural Resources Expert. PG&E will invite participation from the Tribes, archaeological monitors, and agency staff, as appropriate.

TABLE L1.1-4
Summary of Compliance with Applicable Programmatic Agreement (PA) Stipulations
Groundwater Remedy Basis of Design Report/Final (100%) Design
PG&E Topock Compressor Station, Needles, California

Item No.	Reference Location in PA Document	Relevant Excerpt from Document	Triggering Event	Action (Compliance Status)		
				Intermediate (60%) Design	Pre-Final (90%)/Supplemental 90% Design	Final (100%) Design
22	Appendix C Monitoring Protocol	Prior to execution of the PA for the Undertaking, PG&E sometimes invited the Tribes to be present on site during construction to monitor and observe non-maintenance grading, trenching, or other excavation for any facilities, new roads, or other project components related to the Undertaking which may have had the potential to adversely impact cultural and historic resources. The Tribal and Archaeological Monitors shall both be invited to monitor such field work.	Implementation of Field Activities	This stipulation will be adhered to during field implementation. Tribal monitors will be invited to monitor ground-disturbing field activities. Archaeological monitoring will also be conducted during ground disturbing portions of the project.	This stipulation will be adhered to during field implementation. Tribal monitors will be invited to monitor ground-disturbing field activities. Archaeological monitoring will also be conducted during ground disturbing portions of the project. In addition, a similar measure under the CIMP (CUL-1a-8l) will also be adhered to during field implementation. The CIMP is included in an appendix of the Construction/Remedial Action Work Plan.	This stipulation will be adhered to during field implementation. Tribal monitors will be invited to monitor ground-disturbing field activities. Archaeological monitoring will also be conducted during ground disturbing portions of the project. In addition, a similar measure under the CIMP (CUL-1a-8l) will also be adhered to during field implementation. The CIMP is included in an appendix of the Construction/Remedial Action Work Plan.
23	Appendix C Monitoring Protocol	This Protocol specifies ways in which the Tribes, BLM, and PG&E may ensure that: 1. Tribes, BLM, and PG&E, each are kept well informed of Undertaking activities and outcomes; 2. Tribal and Archaeological Monitors have the opportunity to alert PG&E's site supervisor (or designee) to potentially sensitive areas or issues that Monitors may be aware of or may become aware of while fieldwork is in progress; 3. PG&E's site supervisor (or designee) notifies BLM of potentially complicated situations. These situations may include discovery of a new cultural or historical resource, damage to a previously recorded cultural or historical resource, or unanticipated effects identified; 4. Tribal concerns regarding work activities are addressed while fieldwork is in progress.	Implementation of Field Activities	This stipulation will be adhered to during field implementation. Tribal monitors will be invited to monitor ground-disturbing field activities. Archaeological monitoring will also be conducted during ground disturbing portions of the project. Applied Earthworks, a professional cultural resources consulting firm, was retained by PG&E with DTSC approval. Applied Earthworks will observe ground-disturbing activities and will have the authority to temporarily divert or halt any activities in the event that previously unidentified potentially significant cultural resources are discovered.	This stipulation will be adhered to during field implementation. Tribal monitors will be invited to monitor ground-disturbing field activities. Archaeological monitoring will also be conducted during ground disturbing portions of the project. Applied Earthworks, a professional cultural resources consulting firm, was retained by PG&E with DTSC approval. Applied Earthworks will observe ground-disturbing activities and will have the authority to temporarily divert or halt any activities in the event that previously unidentified potentially significant cultural resources are discovered. In addition, a similar measure under the CIMP (CUL-1a-8l) will also be adhered to during field implementation. The CIMP is included in an appendix of the Construction/Remedial Action Work Plan.	This stipulation will be adhered to during field implementation. Tribal monitors will be invited to monitor ground-disturbing field activities. Archaeological monitoring will also be conducted during ground disturbing portions of the project. Applied Earthworks, a professional cultural resources consulting firm, was retained by PG&E with DTSC approval. Applied Earthworks will observe ground-disturbing activities and will have the authority to temporarily divert or halt any activities in the event that previously unidentified potentially significant cultural resources are discovered. In addition, a similar measure under the CIMP (CUL-1a-8l) will also be adhered to during field implementation. The CIMP is included in an appendix of the Construction/Remedial Action Work Plan.
24	Appendix C Monitoring Protocol (Work Schedule)	Tribal and Archaeological Monitors will be provided with anticipated schedules for Topock Remediation Project work that requires monitoring as early as possible but at least three (3) business days in advance of the initiation of the identified project work, whenever possible. Recognizing that changes to the work schedule may be inevitable, any change in the work schedule will be provided to the Tribal and Archaeological Monitors as soon as possible after the change becomes part of the work schedule. If there is a question regarding need for a monitor, the questioning party shall consult the BLM Project or Field Manager who will make the final determination of need.	Implementation of Field Activities	This stipulation will be adhered to during field implementation. The PG&E Site Operations Manager or his designee will provide the work schedule and inform the monitors of schedule changes as soon as practicable.	This stipulation will be adhered to during field implementation. The PG&E Site Operations Manager or his designee will provide the work schedule and inform the monitors of schedule changes as soon as practicable. In addition, a similar measure under the CIMP (CUL-1a-8j) will also be adhered to during field implementation. The CIMP is included in an appendix of the Construction/Remedial Action Work Plan.	This stipulation will be adhered to during field implementation. The PG&E Site Operations Manager or his designee will provide the work schedule and inform the monitors of schedule changes as soon as practicable. In addition, a similar measure under the CIMP (CUL-1a-8j) will also be adhered to during field implementation. The CIMP is included in an appendix of the Construction/Remedial Action Work Plan.
25	Appendix C Monitoring Protocol (Discoveries)	If the Undertaking will affect previously unidentified resources, or affect a previously recorded cultural or historical resource in a way not previously anticipated, or have greater or different effects than previously anticipated, all work having potential for adverse affect shall cease within a fifty (50)-meter radius (or a smaller or larger area if determined appropriate by the BLM, the Monitors, and PG&E in the field) of the point of discovery. The Archaeological and Tribal Monitors will work with BLM and PG&E to ensure that the PA requirements of Stipulation VII (CHPMP) and Stipulation IX (Discoveries) are met.	Implementation of Field Activities	This stipulation will be adhered to during field implementation. Tribal monitors will be invited to monitor ground-disturbing field activities. Archaeological monitoring will also be conducted during ground disturbing portions of the project. Applied Earthworks, a professional cultural resources consulting firm, was retained by PG&E with DTSC approval. Applied Earthworks will observe ground-disturbing activities and will have the authority to temporarily divert or halt any activities in the event that previously unidentified	This stipulation will be adhered to during field implementation. Tribal monitors will be invited to monitor ground-disturbing field activities. Archaeological monitoring will also be conducted during ground disturbing portions of the project. Applied Earthworks, a professional cultural resources consulting firm, was retained by PG&E with DTSC approval. Applied Earthworks will observe ground-disturbing activities and will have the authority to temporarily divert or halt any activities in the event that previously unidentified potentially significant cultural resources are discovered.	This stipulation will be adhered to during field implementation. Tribal monitors will be invited to monitor ground-disturbing field activities. Archaeological monitoring will also be conducted during ground disturbing portions of the project. Applied Earthworks, a professional cultural resources consulting firm, was retained by PG&E with DTSC approval. Applied Earthworks will observe ground-disturbing activities and will have the authority to temporarily divert or halt any activities in the event that previously unidentified potentially significant cultural resources are discovered.

TABLE L1.1-4
Summary of Compliance with Applicable Programmatic Agreement (PA) Stipulations
Groundwater Remedy Basis of Design Report/Final (100%) Design
PG&E Topock Compressor Station, Needles, California

Item No.	Reference Location in PA Document	Relevant Excerpt from Document	Triggering Event	Action (Compliance Status)		
				Intermediate (60%) Design	Pre-Final (90%)/Supplemental 90% Design	Final (100%) Design
				potentially significant cultural resources are discovered.		
26	Appendix C Monitoring Protocol (Human Remains)	If the Undertaking affects previously unidentified human remains and/or associated funerary objects or graves, or affects such resources in a way not previously anticipated, or has greater adverse effect than previously anticipated, all work in the vicinity of the discovery shall cease. No further action will be taken until the BLM, in consultation with Tribal and Archeological Monitors and PG&E in the field, has determined the nature of the discovery and delineated an area not to exceed 50 meters from the approximate center point of the discovery (or a smaller or larger area if warranted) in which no further work is to take place until treatment of the discovery is resolved.	Implementation of Field Activities	This stipulation will be adhered to during field implementation. Tribal monitors will be invited to monitor ground-disturbing field activities. Archaeological monitoring will also be conducted during ground disturbing portions of the project. Applied Earthworks, a professional cultural resources consulting firm, was retained by PG&E with DTSC approval. Applied Earthworks will observe ground-disturbing activities and will have the authority to temporarily divert or halt any activities in the event that previously unidentified potentially significant cultural resources are discovered.	This stipulation will be adhered to during field implementation. Tribal monitors will be invited to monitor ground-disturbing field activities. Archaeological monitoring will also be conducted during ground disturbing portions of the project. Applied Earthworks, a professional cultural resources consulting firm, was retained by PG&E with DTSC approval. Applied Earthworks will observe ground-disturbing activities and will have the authority to temporarily divert or halt any activities in the event that previously unidentified potentially significant cultural resources are discovered.	This stipulation will be adhered to during field implementation. Tribal monitors will be invited to monitor ground-disturbing field activities. Archaeological monitoring will also be conducted during ground disturbing portions of the project. Applied Earthworks, a professional cultural resources consulting firm, was retained by PG&E with DTSC approval. Applied Earthworks will observe ground-disturbing activities and will have the authority to temporarily divert or halt any activities in the event that previously unidentified potentially significant cultural resources are discovered.
27	Appendix C Monitoring Protocol (Safety)	Tribal and Archeological Monitors will be required to meet with PG&E's site supervisor prior to initiating monitoring activity and will be required to obtain any applicable training required under 29 CFR 1910.120 and 40 CFR 300.150. The PG&E site supervisor will identify the safety and logistical guidelines that are appropriate for the monitoring activity. Tribal and Archaeological Monitors are invited to attend the safety meetings at the start of each workday or new work task. If the Monitors do not attend this meeting, they will be instructed about the safety concerns of the day by a PG&E representative. Tribal and Archaeological Monitors will be expected to wear all personal protective equipment specified by PG&E's site supervisor and required of other similarly situated field workers. Tribal and Archaeological Monitors will be expected to actively participate to enhance the safety of themselves and the other workers onsite by communicating with PG&E's site supervisor if any safety concerns are identified. Due to safety considerations at the Project site, Tribal and Archaeological Monitors will also be prohibited from conducting any monitoring within designated construction exclusion zones, unless otherwise authorized by PG&E. Such zones are to be clearly delineated to the Tribal and Archaeological Monitors by PG&E's site supervisor. In these situations, other efforts to provide alternative methods for accommodating Monitors including, but not limited to, high-powered binoculars, spotting scopes, or other vision enhancement tools or alternative viewing platforms will occur.	Implementation of Field Activities	During the project initiation meeting or at similar venues (as appropriate), the PG&E Site Operations Manager or his designee will identify the safety and logistical guidelines that are appropriate for the monitoring activity. Tribal and Archaeological Monitors will be invited to attend the safety meetings at the start of each work day or new work task. If they do not attend, they will be instructed of the safety concerns of the day by PG&E.	During the project initiation meeting or at similar venues (as appropriate), the PG&E Site Operations Manager or his designee will identify the safety and logistical guidelines that are appropriate for the monitoring activity. Tribal and Archaeological Monitors will be invited to attend the safety meetings at the start of each work day or new work task. If they do not attend, they will be instructed of the safety concerns of the day by PG&E.	During the project initiation meeting or at similar venues (as appropriate), the PG&E Site Operations Manager or his designee will identify the safety and logistical guidelines that are appropriate for the monitoring activity. Tribal and Archaeological Monitors will be invited to attend the safety meetings at the start of each work day or new work task. If they do not attend, they will be instructed of the safety concerns of the day by PG&E.

TABLE L1.1-5
Summary of Compliance with Applicable Cultural and Historic Property Management Plan (CHPMP) Provisions
Groundwater Remedy Basis of Design Report/Final (100%) Design
PG&E Topock Compressor Station, Needles, California

Item No.	Reference Location in CHPMP Document	Relevant Excerpt from Document	Action (Compliance Status)		
			Intermediate (60%) Design	Pre-Final (90%)/Supplemental 90% Design	Final (100%) Design
1	Section 6.2	Measures and principles to avoid, minimize, or resolve adverse effects include the following: • Existing monitoring wells and related facilities shall be used to the maximum extent practicable. • The need for and placement of any new facilities or activities will be determined in consultation with the Tribes and the Consulting Parties following the Guidelines in Appendix B. • New facilities or activities will be placed in areas already disturbed by previous grading and other mechanized activities to the extent practicable, consistent with human health and the environment and achieving cleanup in a timely manner. • The performance of all field activities in support of the remedy shall be executed in such a way as to avoid and/or minimize adverse effects to cultural and historic properties to the maximum extent practicable. • Subject to Stipulation I(A) above, direct, indirect and cumulative impacts shall be considered and mitigated.	See responses to PA Stipulations I(B), III(B)(1), III(B)(2)(a)-(c), (e) and (f) in Table 6.2-2.	See responses to PA Stipulations I(B), III(B)(1), III(B)(2)(a)-(c), (e) and (f) in Table 6.2-2	See responses to PA Stipulations I(B), III(B)(1), III(B)(2)(a)-(c), (e) and (f) in Table 6.2-2
2	Section 6.2.3	Refers to the requirement in the PA Stipulation V(E) and PG&E's 2006 Settlement Agreement with the Fort Mojave Indian Tribe that a plan will be prepared for the decommissioning, removal and restoration of the IM-3 facility prior to implementation of the groundwater remedy, in consultation with all Signatories, Tribes and Invited Signatories. Additionally, PG&E will remove all other remediation facilities and appurtenances related to the Topock Remediation Project as soon as practicable following the attainment of cleanup standards and a determination by DOI that the removal of these facilities is protective of human health and the environment.	See responses to PA Stipulations V(A)-(E) in Table 6.2-2.	See responses to PA Stipulations V(A)-(E) in Table 6.2-2.	See responses to PA Stipulations V(A)-(E) in Table 6.2-2.
3	Section 6.3	"Environmental Restoration" refers to the restoration obligations in the Programmatic Agreement and the Consent Decree, including that PG&E draft a plan for decommissioning, removal, and restoration of the IM-3 facility and a Remedy Decommissioning Plan that will address post-remedy restoration of the site.	See responses to PA Stipulations I(D), III(B)(3)(c), and V(D)-(E) in Table 6.2-2.	See responses to PA Stipulations I(D), III(B)(3)(c), and V(D)-(E) in Table 6.2-2.	See responses to PA Stipulations I(D), III(B)(3)(c), and V(D)-(E) in Table 6.2-2.
4	Section 6.6.3	"Avoidance Measures/Management Thresholds" provides that: "The primary means for achieving avoidance will be through careful planning and placement of project facilities and installation of temporary barrier fences around significant cultural and historic properties. Metal fence posts and orange mesh all-weather fabric will be used, unless other appropriate materials are identified as preferable, for temporary fencing and will be regularly inspected and maintained. Permanent post-and double cable fencing may be required in high traffic areas. An archaeologist and/or Tribal representative(s) will clearly delineate the sensitive areas to be avoided by construction and supervise fence installation. Project personnel will be notified that fenced locations are to be completely avoided."	See responses EIR MMRP CUL-1a in Table 6.1-1. PG&E remediation resources specialist (Glenn Caruso) participated in field reviews of planned remedial facilities with the design team on April 23-24 and June 20, 2012. The purpose of these field reviews along with in office reviews is to ensure that the footprints of planned facilities are designed, in ways that avoid, minimize, and mitigate significant adverse effects to historically significant cultural and historic resources.	See responses to EIR MMRP CUL-1a in Table 6.1-1. PG&E's steps to prevent and reduce inadvertent damage are outlined in the CIMP Protocol for CUL-1a-8n: Protocols for protective measures for archaeological/historical sites during construction (Section 2.14 of the CIMP). In this protocol, PG&E outlines pre-construction measures to be taken to identify sites requiring protection, pre-construction identification of protective measures, and procedures for installation and removal of the protective measures, and restoration of the area to pre-construction conditions. Further, under the CHPMP requirements at Section 6.6.5 Periodic Site Monitoring, PG&E has proposed a monitoring and condition assessment program in the 2013 monitoring report (AE 2014a) and submitted for DTSC review.	See responses to EIR MMRP CUL-1a in Table 6.1-1. PG&E's steps to prevent and reduce inadvertent damage are outlined in the CIMP Protocol for CUL-1a-8n: Protocols for protective measures for archaeological/historical sites during construction (Section 2.14 of the CIMP). In this protocol, PG&E outlines pre-construction measures to be taken to identify sites requiring protection, pre-construction identification of protective measures, procedures for installation and removal of the protective measures, and restoration of the area to pre-construction conditions. Further, under the CHPMP requirements at Section 6.6.5 Periodic Site Monitoring, PG&E has proposed and initiated a monitoring and condition assessment program in the 2013 monitoring report (AE 2014a) and submitted for DTSC review.

TABLE L1.1-5
Summary of Compliance with Applicable Cultural and Historic Property Management Plan (CHPMP) Provisions
Groundwater Remedy Basis of Design Report/Final (100%) Design
PG&E Topock Compressor Station, Needles, California

Item No.	Reference Location in CHPMP Document	Relevant Excerpt from Document	Action (Compliance Status)		
			Intermediate (60%) Design	Pre-Final (90%)/Supplemental 90% Design	Final (100%) Design
5	Section 6.6.4	Construction Monitoring Monitoring of all earth-disturbing Project activities will be in accordance with Appendix C of the PA (Tribal and Archaeological Monitoring Protocol). Qualified archaeological and Tribal monitors will be notified in advance and invited to be on site during earth-disturbing construction activities (grading, trenching, boring, drilling, or other excavation) for new injection, extraction or monitoring wells, new pipelines, new treatment facilities, new access roads, new staging areas, other new transportation facilities, or other new Project components. Due to safety considerations at the Project site, Tribal and archaeological monitors will comply with all safety requirements.	See responses to PA Appendix C, Monitoring Protocol in Table 6.2-2. See also EIR MMRP CUL-1a-8(I).	See responses to PA Appendix C, Monitoring Protocol in Table 6.2-2. See also EIR MMRP CUL-1a-8(I).	See responses to PA Appendix C, Monitoring Protocol in Table 6.2-2. See also EIR MMRP CUL-1a-8(I).
6	Section 6.6.5	Periodic Site Monitoring Sound management of the archaeological and historical properties requires that any progressive degradation of sites be identified. Additionally, it is recognized that a mechanism is needed to identify any accidental damage that may occur. To accomplish these goals, PG&E will develop a proposal describing a program of periodic site monitoring and condition assessment. BLM, following consultation with the Tribes and other appropriate parties, will approve any monitoring program before implementation by PG&E. The program will include all historic properties within the APE. Any previously unknown properties that may be encountered during the Project also will be included in the monitoring program unless such properties are evaluated as ineligible. During its initial phase, periodic monitoring and condition assessment will consist of annual field visits to monitor site conditions and disturbances	As part of the 2004 Cultural Resources Management Plan, Applied Earthworks conducted quarterly monitoring the first year and since then (2005 – 2012) annual monitoring and condition assessment.	PG&E has proposed a monitoring and condition assessment program in the 2013 monitoring report (AE 2014a) and submitted for DTSC review.	PG&E has proposed and initiated a monitoring and condition assessment program in the 2013 monitoring report (AE 2014a) and submitted for DTSC review.
7	Section 6.8	"Protocols for Tribal and Archaeological Monitoring" states that monitoring for the Project will be performed in accordance with the PA's Appendix C (Tribal and Archaeological Monitoring Protocol).	See responses to PA Appendix C, Monitoring Protocol in Table 6.2-2. See also EIR MMRP CUL-1a-8(I).	See responses to PA Appendix C, Monitoring Protocol in Table 6.2-2. See also EIR MMRP CUL-1a-8(I).	See responses to PA Appendix C, Monitoring Protocol in Table 6.2-2. See also EIR MMRP CUL-1a-8(I).
8	Section 6.9	If the Undertaking extends beyond the APE, BLM will determine, in consultation with the PA Signatories, Tribes, and Invited Signatories, what (if any) changes are required in the APE. If BLM determines that the APE must be revised, BLM will redefine the APE, taking into account the advice of the other Consulting Parties. Should such revision to the APE be needed, BLM will amend the CHPMP to include any changes to the APE (BLM et al. 2010:8).	See response to PA Stipulation II(B) in Table 6.2-2.	See response to PA Stipulation II(B) in Table 6.2-2.	See response to PA Stipulation II(B) in Table 6.2-2.

TABLE L1.1-5
Summary of Compliance with Applicable Cultural and Historic Property Management Plan (CHPMP) Provisions
Groundwater Remedy Basis of Design Report/Final (100%) Design
PG&E Topock Compressor Station, Needles, California

Item No.	Reference Location in CHPMP Document	Relevant Excerpt from Document	Action (Compliance Status)		
			Intermediate (60%) Design	Pre-Final (90%)/Supplemental 90% Design	Final (100%) Design
9	Section 7.1	1. Physical avoidance of the Topock Maze and associated prehistoric sites. 2. To the maximum extent practicable, PG&E will avoid all archaeological sites within the APE and protect all historic properties regardless of their NRHP status. The primary means for accomplishing avoidance will be through careful planning and placement of proposed access routes and drilling sites and by the installation of barrier fences around significant historic properties. A pre-project archaeological survey field verification will be conducted prior to any ground-disturbing activities. Consistent with other phases of work conducted at the Topock Remediation Project site, agency representatives and other stakeholders (including representatives of Native American Indian Tribes involved with the Project) will be invited to the site for a project initiation meeting to discuss various cultural sensitivities associated with the Project. 3. Ensure that PG&E shall, to the extent practicable, restore the areas affected by the Topock Remediation Project within the APE, including but not limited to the site of the existing treatment plant and related facilities but excluding the Topock Compressor Station and related facilities, to the conditions existing prior to the construction of the PG&E investigation and remediation related appurtenances and facilities per PA Stipulation I.D. 4. Remediation activities that propose the removal or introduction of vegetation on public lands shall be undertaken after coordination with Tribes to assess if culturally significant native plant species are being impacted and if there could be potential visual impacts to the Topock TCP. 5. Existing monitoring wells and related facilities shall be used to the extent practicable per PA Stipulation III.B.2(a). 6. The need for and placement of any new facilities or activities will be determined in consultation with the Tribes and the Consulting Parties following the Guidelines in Appendix B and per PA Stipulation III.B.2(b). 7. New facilities or activities will be placed in areas already disturbed by previous grading and other mechanized activities to the extent practicable, consistent with human health and the environment and achieving cleanup in a timely manner per PA Stipulation III.B.2(c). 8. Clay deposits are an important resource identified by the Hualapai in their creation, and may be important as well to other Tribes. Accordingly, BLM, PG&E, and those Tribes that ascribe importance to clay deposits shall meet to identify the clay deposits that are considered a resource and develop a protocol to be followed if such clay deposits are encountered.	See responses to PA Stipulations I(B), I(D), III(B)(1), III(B)(2)(a)-(c) and (e), III(B)(3)(c), and V(D) in Table 6.2-2. See also EIR MMRPs CUL-1a-8(i), AES-1, and AES-2. Regarding Item 4, PG&E does not plan to remove or introduce vegetation on public lands in connection with the remedy; instead, only some trimming of vegetation may be required which will be focused on non-native species (e.g., tamarisk). The trimming of native species (e.g., palo verde and mesquite) will be avoided or minimized to the extent practicable. Regarding Item 8, BLM met with the Hualapai Tribe and PG&E in late 2012 and discussed the Clay Monitoring Protocol. The Hualapai representative indicated that the Hualapai would make the initial draft of this protocol and then send it out for BLM and PG&E to review.	See responses to PA Stipulations I(B), I(D), III(B)(1), III(B)(2)(a)-(c) and (e), III(B)(3)(c), and V(D) in Table 6.2-2. See also EIR MMRPs CUL-1a-8(i), AES-1, and AES-2. Regarding Item 4, PG&E will introduce only native plants grown from local seed sources. These plants will be of the same species as those removed. At this 90% design stage, removal of tamarisk and arrow weed will occur during pipeline construction on the historical floodplain. The remedy design has avoided native trees in this area where they have been observed; however, it is possible that individual palo verde or mesquite trees could occur within the tamarisk thickets that will be affected. Where possible during construction, native trees will be avoided even if this requires additional impacts (i.e., removal or trimming) on tamarisk and arrow weed. There will be locations where impacts to native trees cannot be avoided and those losses will be mitigated according to the nature of the impact and the approaches in the appropriate restoration plan for the HNWR refuge, riparian areas, mature plants, or culturally-significant plants. Mitigation for impacts could include transplantation of likely candidate (younger) trees or replacement planting in a designated restoration area. The northern aerial bridge crossing of Bat Cave Wash is one location where it is currently known that 3 palo verde trees will require removal in order to install the aerial pipe bridge. Regarding Item 8, BLM met with the Hualapai Tribe and PG&E in late 2012 and discussed the Clay Monitoring Protocol. The Hualapai representative indicated that the Hualapai would make the initial draft of this protocol and then send it out for BLM and PG&E to review.	See responses to PA Stipulations I(B), I(D), III(B)(1), III(B)(2)(a)-(c) and (e), III(B)(3)(c), and V(D) in Table 6.2-2. See also EIR MMRPs CUL-1a-8(i), AES-1, and AES-2. Regarding Item 4, PG&E will introduce only native plants grown from local seed sources. These plants will be of the same species as those removed. At this final design stage, removal of tamarisk and arrow weed will occur during pipeline construction on the historical floodplain. The remedy design has avoided native trees in this area where they have been observed; however, it is possible that individual palo verde or mesquite trees could occur within the tamarisk thickets that will be affected. Where possible during construction, native trees will be avoided even if this requires additional impacts (i.e., removal or trimming) on tamarisk and arrow weed. There will be locations where impacts to native trees cannot be avoided and those losses will be mitigated according to the nature of the impact and the approaches in the appropriate restoration plan for the HNWR refuge, riparian areas, mature plants, or culturally-significant plants. Mitigation for impacts could include transplantation of likely candidate (younger) trees or replacement planting in a designated restoration area. Regarding Item 8, BLM met with the Hualapai Tribe and PG&E in late 2012 and discussed the Clay Monitoring Protocol. The Hualapai representative indicated that the Hualapai would make the initial draft of this protocol and then send it out for BLM and PG&E to review.
10	Section 7.2	Accommodation of Tribal Activities and Ceremonies Involving the Topock Maze/TCP The BLM will continue to work with the Tribes to identify Tribal activities and ceremonies that are associated with the Topock TCP. When such activities and ceremonies are identified, BLM will consult with the Tribes and PG&E to develop treatment measures to accommodate them. Treatment measures may address scheduling of Undertaking work to accommodate ceremonial activities and to mitigate audible and visual impacts.	See response to EIR MMRP CUL-1a-8k in Table 6.1-1.	See response to EIR MMRP CUL-1a-8k in Table 6.1-1.	See response to EIR MMRP CUL-1a-8k in Table 6.1-1.
11	Section 7.3	Treatment of other cultural, historical, and archaeological properties within the APE "The only properties identified within the APE that are not contributing properties to the Topock TCP are the properties from the historic period (i.e., Route 66, the AT&SF Railroad Grade, and National Old Trails Road). None of these properties has been impacted, to date, by this Undertaking. These properties shall be avoided, to the extent practicable, in the implementation of the Undertaking. These properties are periodically monitored for condition assessment to assure that they are being protected."	See responses to PA Stipulations I(B), III(B)(1), III(B)(2)(a)-(c) and (e) in Table 6.2-2.	See responses to PA Stipulations I(B), III(B)(1), III(B)(2)(a)-(c) and (e) in Table 6.2-2.	See responses to PA Stipulations I(B), III(B)(1), III(B)(2)(a)-(c) and (e) in Table 6.2-2.

TABLE L1.1-5
Summary of Compliance with Applicable Cultural and Historic Property Management Plan (CHPMP) Provisions
Groundwater Remedy Basis of Design Report/Final (100%) Design
PG&E Topock Compressor Station, Needles, California

Item No.	Reference Location in CHPMP Document	Relevant Excerpt from Document	Action (Compliance Status)		
			Intermediate (60%) Design	Pre-Final (90%)/Supplemental 90% Design	Final (100%) Design
12	Section 8.1	Discoveries - Steps to be taken if previously unrecorded properties are found	PG&E will follow the procedures specified in Appendix C of the CHPMP (Discovery Plan). See also response to PA Stipulation IX(A)-(D) in Table 6.2-2, and to EIR MMRP CUL-1a-8(b) and -8(o) in Table 6.1-1.	PG&E will follow the procedures specified in Appendix C of the CHPMP (Discovery Plan). See also responses to PA Stipulation IX(A)-(D) in Table 6.2-2, and to EIR MMRP CUL-1a-8(b) and -8(o) in Table 6.1-1.	PG&E will follow the procedures specified in Appendix C of the CHPMP (Discovery Plan). See also responses to PA Stipulation IX(A)-(D) in Table 6.2-2, and to EIR MMRP CUL-1a-8(b) and -8(o) in Table 6.1-1.
13	Section 8.2	Discoveries - Treatment of any human remains, funerary objections, ceremonial objects and items of cultural patrimony	PG&E will follow the procedures specified in Appendix D of the CHPMP (Plan of Action). See also response to PA Stipulation IX(A)-(D) in Table 6.2-2, and to EIR MMRP CUL-1a-8(b) and -8(o) in Table 6.1-1.	PG&E will follow the procedures specified in Appendix D of the CHPMP (Plan of Action). See also responses to PA Stipulation IX(A)-(D) in Table 6.2-2, and to EIR MMRP CUL-1a-8(b) and -8(o) in Table 6.1-1.	PG&E will follow the procedures specified in Appendix D of the CHPMP (Plan of Action). See also responses to PA Stipulation IX(A)-(D) in Table 6.2-2, and to EIR MMRP CUL-1a-8(b) and -8(o) in Table 6.1-1.
14	Section 8.3	Consultation Procedures Related to Unanticipated Discoveries • The BLM will notify all Signatories of the PA, Tribes and Invited Signatories of the nature and general location of any discovery. If the Tribes, PG&E and BLM can resolve treatment of the discovery in a manner that does not cause adverse effects to significant cultural and historic properties, BLM shall document the resolution, the activities within the work area may proceed and the AZ SHPO and the CA SHPO shall be notified of the discovery and resolution. The Tribes, PG&E and BLM will use their best efforts to resolve treatment as quickly as possible. • If there is failure to resolve treatment of the discovery in consultation with the Tribes and PG&E, BLM shall then consult with the AZ SHPO or the CA SHPO to develop a treatment plan that takes into account the effects of the Undertaking on the discovery. Within fifteen (15) days of notification of discovery, BLM shall provide the consulted SHPO(s), via email, a recommendation for resolving the discovery situation that takes into account the potential effects of the Undertaking on the discovery. • If the CA SHPO or AZ SHPO (as appropriate, depending on the location of the discovery) does not object to BLM's recommendation(s) within fifteen (15) days, BLM will implement the recommendation(s). If the consulted SHPO objects to the recommendation, BLM will utilize the dispute resolution process in Stipulation XV of the PA to resolve any objection.	See response to PA Stipulation IX(A)-(D) in Table 6.2-2. See also EIR MMRP CUL-1a-8(b) and -8(o) in Table 6.1-1.	See responses to PA Stipulation IX(A)-(D) in Table 6.2-2 and to EIR MMRP CUL-1a-8(b) and -8(o) in Table 6.1-1.	See responses to PA Stipulation IX(A)-(D) in Table 6.2-2 and to EIR MMRP CUL-1a-8(b) and -8(o) in Table 6.1-1.

Operation and Maintenance Manual

Volume 1

Operation and Maintenance Plan

Final (100%) Design Submittal for the Final Groundwater Remedy

PG&E Topock Compressor Station Needles, California

Prepared for

Pacific Gas & Electric Company

November 2015

CH2MHILL®

155 Grand Avenue
Suite 800
Oakland, CA 94612

Contents

Acronyms and Abbreviations ..... **vii**

1 Introduction **1-1**
1.1 Report Organization 1-1

2 System Description **2-1**
2.1 In-Situ Remediation 2-1
2.1.1 NTH IRZ 2-2
2.1.2 Inner Recirculation Loop 2-4
2.1.3 TCS Recirculation Loop 2-6
2.2 Freshwater Supply 2-8
2.2.1 Freshwater Supply Wells, Conveyance, and Storage 2-8
2.2.2 Conveyance to Injection Wells 2-10
2.2.3 Freshwater Injection Wells 2-10
2.3 Remedy-produced Water Management 2-11
2.3.1 Generation – Routine Automatic Backwash 2-12
2.3.2 Conveyance of Unconditioned Remedy-produced Water 2-13
2.3.3 Conditioning 2-14
2.3.4 Conditioned Water Distribution 2-16
2.4 Power Supply and Distribution 2-17
2.5 Remedy SCADA 2-18
2.6 Institutional Controls 2-19
2.7 Improvements at TCS Evaporation Ponds 2-19
2.7.1 Purpose 2-20
2.8 Long-Term Remedy Support Area at Moabi Regional Park 2-22

3 Operation and Maintenance Procedures **3-1**
3.1 In-situ Remediation 3-1
3.1.1 Groundwater Extraction and Recirculation 3-1
3.1.2 Carbon Substrate Storage and Deliveries 3-3
3.1.3 Carbon Substrate Amendment 3-3
3.1.4 Miscellaneous Controls 3-10
3.1.5 Regularly Scheduled Equipment O&M 3-11
3.1.6 Standard Operating Procedures and Equipment O&M Manuals 3-13
3.2 Freshwater Supply, Conveyance, Storage, and Injection 3-13
3.2.1 Operating Procedures 3-14
3.3 Remedy-produced Water Management 3-15
3.3.1 Operating Procedures 3-16
3.4 Power Supply and Distribution 3-20
3.5 Remedy SCADA 3-20
3.6 Institutional Controls 3-21
3.7 Improvements at TCS Evaporation Ponds 3-21
3.7.1 Electrical Power Generator 3-21
3.7.2 Natural Gas Regulators 3-22
3.7.3 Water Recirculating Pumps 3-22
3.8 Long-Term Remedy Support Area at Moabi Regional Park 3-23

4 Well Maintenance and Decommissioning **4-1**
4.1 Well Performance Tracking 4-1
4.1.1 Baseline Assessment 4-1

4.1.2 Long-Term Performance Tracking 4-4
4.2 Well Maintenance 4-7
4.2.1 Routine Maintenance 4-7
4.2.2 Non-Routine Maintenance 4-9
4.2.3 Well Maintenance Frequency 4-21
4.2.4 Monitoring Well Acceptance 4-24
4.2.5 Reporting 4-24
4.3 Well Decommissioning 4-25

5 Pipeline Maintenance and Repair 5-1
5.1 Clean-In-Place (CIP) System 5-1
5.2 Maintenance and Repair of Plastic Pipe (HDPE) 5-2
5.3 Maintenance and Repair of Aboveground Pipe (Schedule 40 Steel with Cement Mortar Lining) 5-3
5.4 Additional Pipeline Maintenance Provisions 5-3

6 Waste Management Plan and Recoverable Materials 6-1
6.1 Waste Management Plan 6-1
6.1.1 Expected Waste Streams 6-1
6.1.2 Waste Characterization 6-3
6.1.3 Management of Waste 6-4
6.1.4 Waste Transportation and Disposal 6-6
6.1.5 Disposal Facilities 6-6
6.2 Recoverable Materials 6-7

7 Other Site Management Practices 7-1
7.1 Storm Water Pollution Prevention 7-1
7.2 Hazardous Material Management 7-1
7.3 Fuel Storage and Fueling Practices 7-3
7.4 Access Road and Pathway Maintenance 7-3
7.5 Vegetation Control for Maintenance of Wireless Infrastructure 7-5
7.6 Maintenance of Small Solar Panels 7-5

8 References 8-1

Exhibits

2.2-1 Freshwater Supply System Process Schematic 2-8
2.3-1 Remedy-produced Water Management Process Schematic 2-12
2.3-2 Conditioning System Process Schematic 2-14
2.7-1 Layout of Evaporation Enhancement Equipment at TCS Evaporation Ponds 2-21
3.3-1 Filter Feed Pump, Filter and Automated Valve Position—Continuous Processing 3-17
3.3-2 Filter Feed Pump, Filter and Automated Valve Position—Batch Processing 3-19
4.1-1 Biological and Geochemical Analytical Monitoring Parameters 4-3
4.1-2 Field Screening Parameters 4-4
4.1-3 Recommended Performance Monitoring Activities Frequency 4-5
4.1-4 Well Performance Color Code System 4-6
4.2-1 Routine Maintenance Matrix for Extraction and Injection Wells 4-7
4.2-2 Diagnosis of Pump Problems 4-10
4.2-3 Well Problem Diagnosis using Non-Routine Methods 4-12
4.2-4 Performance Loss Remedies 4-13
4.2-5 Summary of Available Chemicals for Well Rehabilitation Applications 4-16
4.2-6 Estimated Frequency for Maintenance Activities 4-22

4.2-7 Conceptual Injection Well Maintenance Frequency Pyramid 4-23
4.2-8 Conceptual Extraction Well Maintenance Frequency Pyramid 4-23
4.2-9 General Outline for Well Performance Reporting 4-25
5.1-1 Summary of Available Chemicals for Clean-In-Place System 5-2
5.2-1 Pictures of Select Repair Techniques - Saddle Fusion, Electrofusion Patch, Mechanical Coupling 5-3
6.1-1 Summary of Remedy-produced Water Volume by Source and Type 6-2
6.1-2 Management Plan for Remedy-produced Water 6-4
6.2-1 Recoverable Materials 6-7
7.4-1 Summary of Roads and Pathways BMPs 7-4

Tables

2.1-1 Final Remediation Well Design Parameter Summary: National Trails Highway IRZ Wells
2.1-2 Final Remediation Well Design Parameter Summary: Inner Recirculation Loop Wells
2.1-3 Final Remediation Well Design Parameter Summary: TCS Recirculation Loop Wells
2.2-1 Final Remediation Well Design Parameter Summary: Freshwater Injection Wells
3.1-1 Control Set Points and Approaches

Figures

2.1-1 General Remedy System Layout – California
2.2-1 General Remedy System Layout – Arizona
2.6-1 Area For Category 1 Institutional Controls
2.6-1 Area For Category 1 Institutional Controls
6.1-1 Remedy-Produced Water Schematic –Backwash And Second Flush Rehabilitation
6.1-2 Remedy-Produced Water Schematic – First Flush Rehabilitation
6.1-3 Waste Management Areas
7.4-1A Proposed Access Routes for Remedy Features—California
7.4-1B Proposed Access Routes for Remedy Features—Arizona

Appendices

A Referenced Drawings
B Standard Operating Procedures *(provided on CD-ROM Only)*

- IRZ-SOP-01: MW-20 Bench System Startup
- IRZ-SOP-02: MW-20 Bench System Shutdown/Emergency Shutdown
- IRZ-SOP-03: MW-20 Bench Routine Operation System Inspection
- IRZ-SOP-04: Carbon Amendment Dosing Procedures
- IRZ-SOP-05: MW-20 Bench Carbon Storage Tank Delivery/Filling
- IRZ-SOP-06: MW-20 Bench Sampling Purge Water Transfer
- IRZ-SOP-07: Bench Scale Testing of Clean-in-Place Reagents
- IRZ-SOP-08: Clean-in-Place Reagent Delivery
- IRZ-SOP-09: Clean-in-Place Solution Mixing and Application
- IRZ-SOP-10: Discharge of Clean-in-Place Water to the Remedy-Produced Water Conditioning Plant
- IRZ-SOP-11: Use of Portable Tanks for Individual Well Dosing
- IRZ-SOP-12: Offsite Trucking of Clean-in-Place Water from MW-20 Bench

- Remedy-SOP-03: Cleaning and Maintenance of Instrumentation and Control Equipment
- Remedy-SOP-04: Maintenance of Aboveground Pumps
- Remedy-SOP-05: Cleaning and Maintenance of Valves and Flow Control Equipment
- Remedy-SOP-06: Automatic Backwashing

- Remedy-SOP-07: Secondary Containment Inspection and Maintenance at Buildings
- Remedy-SOP-08: Inspection of Frac Tanks

- PIPE-SOP-01: Conveyance System Inspection and Maintenance
- PIPE-SOP-02: Well and Meter Vault Inspection and Maintenance

- FWS-SOP-01: Startup and Shutdown of Freshwater Supply Conveyance and Storage System
- FWS-SOP-02: Sand Separator and Drywell Operation and Maintenance
- FWS-SOP-03: Freshwater Supply Well Site Inspection

- Well-SOP-01: Well and Borehole Permanent Decommissioning
- Well-SOP-02: Cleaning and Maintenance of Well Pumps
- Well-SOP-03: Physical/chemical well maintenance
- Well-SOP-04: Well Maintenance Chemical Delivery
- Well-SOP-05: Use of Portable Tanks for Well Maintenance/Rehab
- Well-SOP-06: Packer Inspection and Maintenance/Filling Procedures
- Well-SOP-07: Well Rehab Bench Testing
- Well-SOP-08: Remedy Well Inspection
- Well-SOP-09: Inspection and Repair of Groundwater Monitoring Wells

- RTP-SOP-01: System “Hot” Startup and Shutdown
- RTP-SOP-02: Batch Conditioning Process
- RTP-SOP-03: Continuous Conditioning Process
- RTP-SOP-04: CartridgeFfilter Maintenance
- RTP-SOP-05: Secondary Containment Operation in the Remedy-produced Water Conditioning Plant
- RTP-SOP-06: Phase Separator Loading and Removal
- RTP-SOP-07: Manual Cleaning of Frac Tanks
- RTP-SOP-08: Off-site Trucking of Remedy-produced Water
- RTP-SOP-09: Inspection of B-Side Conditioned Water Storage Tank
- RTP-SOP-10: Disposal of Produced Water in Evaporation Ponds via the TCS Wastewater Tank Discharge Connection
- RTP-SOP-11: Water Transfer from Conditioned Water Tank Farm to Tank at MW-20 Bench

- PWR-SOP-01: Transformer Inspection
- PWR-SOP-02: Solar PhotoVoltaic System Maintenance
- PWR-SOP-03: Communication Panel Inspection and Maintenance
- PWR-SOP-04: Remote Well(s) Panel Inspection and Maintenance

- SCADA-SOP-01: HMI/SCADA Application Backup and Cleaning
- SCADA-SOP-02: SCADA Historian Backup and Cleaning

- CHQ-SOP-01: Offsite Hauling of Wastewater
- CHQ-SOP-02: Truck Decontamination
- CHQ-SOP-03: Generator Inspection
- CHQ-SOP-04: Potable Water Delivery
- CHQ-SOP-05: Offsite Hauling of Sewage

C Select Equipment O&M Manuals *(provided on CD-ROM Only)*
D Storm Water Pollution Prevention Plan for O&M Activities (SWPPP)
E Project-Specific Hazardous Materials Business Plans (HMBPs) *(provided on CD-ROM Only)*
F Fuel SOP *(provided on CD-ROM Only)*
G PG&E Topock Coagulant Screening Report *(provided on CD-ROM Only)*

Acronyms and Abbreviations

µg/L	micrograms per liter
ANSI	American National Standards Institute
ARAR	applicable or relevant and appropriate requirement
AST	aboveground storage tank
AWWA	American Water Works Association
BCHT	blended chemical heat treatment
BOD	Basis of Design
CCR	California Code of Regulations
CERCLA	Comprehensive Environmental Response, Compensation, and Liability Act
CFR	Code of Federal Regulations
CIP	clean-in-place
CO_2	carbon dioxide
CPVC	chlorinated polyvinyl chloride
Cr(III)	trivalent chromium
Cr(VI)	hexavalent chromium
DOI	U.S. Department of the Interior
DTSC	California Department of Toxic Substances Control
EIR	Environmental Impact Report
ft w.c.	feet of water column
FWPTS	Freshwater Pre-injection Treatment System
gph	gallons per hour
gpm	gallon per minute
H-O-A	Hand-Off-Auto
HCl	hydrochloric acid
HDPE	high-density polyethylene
HMBP	Hazardous Materials Business Plan
HMI	human/machine interface
HNWR	Havasu National Wildlife Refuge
Hz	hertz
IC	institutional control
IM-3	Interim Measure No. 3
IRL	Inner Recirculation Loop
IRZ	In-situ Reactive Zone

ISPT	In-situ Pilot Test
kVA	kilovolt-amperes
LIT	level-indicating transmitter
mg/kg	milligrams per kilogram
mg/L	milligrams per liter
NEMA	National Electrical Manufacturers Association
NFPA	National Fire Protection Association
NPDES	National Pollutant Discharge Elimination System
NSF	National Science Foundation
NTH	National Trails Highway
NTU	nephelometric turbidity units
O&M	operation and maintenance
OIT	operator interface terminal
P&ID	process and instrumentation diagram
psi	pounds per square inch
psig	pounds per square inch gauge
P/V	pressure/vacuum
PG&E	Pacific Gas and Electric Company
PLC	programmable logic controller
PVC	polyvinyl chloride
RCRA	Resource Conservation and Recovery Act
RICE	reciprocating internal combustion engine
RWQCB	Colorado River Basin Regional Water Quality Control Board
RTU	remote terminal unit
SBAP	surge block with air-lift pumping
SCADA	supervisory control and data acquisition
SFCD	suction flow control device
SOP	Standard Operating Procedure
STI	Steel Tank Institute
STLC	soluble threshold limit concentrations
SWPPP	Storm Water Pollution Prevention Plan
SWRCB	California State Water Resources Control Board
TBD	to be determined
TC	toxicity characteristic
TCLP	toxicity characteristic leaching procedure

TCS	Topock Compressor Station
TDH	total dynamic head
TEG	thermoelectric generator
TOC	total organic carbon
TTLC	total threshold limit concentration
TW Bench	Transwestern Bench
U.S.C.	United States Code
USEPA	U.S. Environmental Protection Agency
VAC	volts alternating current
VDC	volts direct current
VFD	variable frequency drives
WDR	Waste Discharge Requirement
WET	California Waste Extraction Test

SECTION 1

Introduction

This Operation and Maintenance (O&M) Plan presents the strategy and procedures for performing operations and maintenance of the groundwater remedy system to be constructed at the Pacific Gas and Electric Company (PG&E) Topock Compressor Station (TCS). To the extent practicable, operational flexibility has been built into the design of the remedy to allow foreseeable future issues to be addressed by procedural changes rather than equipment design changes. The groundwater remedy will be operated in accordance with this O&M Plan and other volumes of the O&M Manual. Not included in this O&M Plan are the layup procedures for the Interim Measure No. 3 (IM-3) treatment plant, which are presented in the IM-3 Decommissioning Work Plan (Appendix F to the Construction/Remedial Action Work Plan [CH2M HILL 2015]).

Changes will occur during the decades-long operation of the remedy, which may necessitate the update of select portions of this O&M Plan. Material changes to the O&M procedures/Standard Operating Procedures (SOPs) will be reported in the quarterly progress reports. Operations staff will have the latest SOPs on file at the site. For administrative changes to the SOPs, such as changes in point of contact information, a log of changes will be maintained by PG&E. For efficiency, administrative changes will be bundled and/or opportunistically combined with O&M Plan updates to incorporate material changes. Current SOPs and change logs will be made available on a SharePoint site for reference by agencies, stakeholders, and Tribes. The need for and the timing/frequency of updating this O&M Plan will be discussed with the agencies as remedy start-up and operation progresses.

1.1 Report Organization

This O&M Plan is organized into the following sections:

- Section 2.0 describes the key remedy components: in-situ remediation; freshwater supply, conveyance, and storage; remedy-produced water management; power supply and distribution; Remedy Supervisory Control and Data Acquisition (SCADA); and institutional controls (ICs). In addition, improvements at TCS ponds to enhance evaporation and truck loading capability, as well as the long-term remedy support area at Moabi Regional Park, are also described.
- Section 3.0 describes the in-situ remediation systems startup and normal operations, controls, and associated alarms. Also discussed are the detailed SOPs and select equipment O&M Manuals for the in-situ remediation and freshwater supply, conveyance, and storage systems; remedy-produced water management; power supply and distribution; Remedy SCADA systems; ICs; and improvements at TCS ponds. A list of control set points and control approaches and referenced process and instrumentation diagrams (P&IDs) is also presented.
- Section 4.0 describes the procedures and approaches to well maintenance and decommissioning.
- Section 5.0 discusses general guidelines for maintenance of pipelines (plastic and cement mortar lined steel pipe).
- Section 6.0 presents the Waste Management Plan for expected waste streams from remedy O&M activities and lists potential recoverable materials and best practices for recycling and reusing materials. The handling and management of soils are discussed in the Soil Management Plan (Volume 4 of the O&M Manual).
- Section 7.0 discusses other site management practices including the Storm Water Pollution Prevention Plan (SWPPP), Hazardous Materials Business Plans (HMBPs), access roads maintenance, management of vegetation for clearance of telecommunication lines, and maintenance of small solar panels.
- Section 8.0 presents a list of references used in the preparation of this volume.

SECTION 2

System Description

This section describes the main systems and sub-systems of the groundwater remedy. The description includes the purpose, a listing of the components, a description of the process, and anticipated controls. For simplicity, the abbreviation SCADA (supervisory control and data acquisition system) is used to refer collectively to the hardware and software used to control the Remedy systems including: programmable logic controllers (PLCs), communication infrastructure (e.g., cables and equipment, fiber-optic communication, radio transmission, or other wireless communication), and the operator interface terminals (OITs) or human/machine interface (HMI) devices.

For the reader's convenience, the referenced P&IDs and drawings have been included in Appendix A of this volume. All P&IDs can be found in Appendix D, Plans (Engineering Drawings), of the Basis of Design Report/Final (100%) Design Submittal (BOD Report). All pumps and valves will have stainless steel identification tags attached to the device to enable operations personnel to identify equipment and cross-reference information within the O&M Manual and drawings.

2.1 In-Situ Remediation

The in-situ remediation at the Topock site is shown on Figure 2.1-1 (figures are located at the end of each section) and consists of the following components:

- An In-situ Reactive Zone (IRZ) using a line of wells installed along National Trails Highway (NTH) may be used as both injection and extraction wells to circulate groundwater and distribute an organic carbon source to promote reduction of the hexavalent chromium (Cr[VI]) to trivalent chromium (Cr[III]).
- An Inner Recirculation Loop (IRL) consisting of:
  - River Bank Extraction Wells along the Colorado River to provide hydraulic capture of the plume, clean up the floodplain downgradient of the IRZ, enhance the flow of contaminated groundwater through the NTH IRZ line, and control migration of IRZ-generated by-products.
  - IRL Injection Wells to re-inject groundwater extracted from the River Bank Extraction Wells, which may be amended with an organic carbon source, and/or inject fresh water into wells in the upgradient portion of the Cr(VI) plume to flush the plume through the NTH IRZ.
  - Freshwater Injection Wells which inject fresh water obtained outside the treatment area into wells upgradient of the Cr(VI) plume to control and confine the plume migration to the west, assist with flushing the plume through the NTH IRZ (see Section 2.2), and constrain westward spread of carbon-amended water and in-situ byproducts from the Inner Recirculation Loop.
- A TCS Recirculation Loop consisting of:
  - East Ravine Extraction Wells in the eastern (downgradient) end of the East Ravine to provide hydraulic capture of contaminated groundwater in bedrock; and Transwestern (TW) Bench Extraction Wells in the area northeast of the TCS to accelerate capture of Cr(VI) impacted groundwater from the alluvial deposits located downgradient of the TCS.
  - TCS Injection Wells located upgradient of the TCS for the re-injection of groundwater extracted from the East Ravine Extraction Wells and TW Bench Extraction Wells, which will be amended with an organic carbon source to promote reduction of the Cr(VI) to Cr(III) and remove elevated Cr(VI) groundwater concentrations from the alluvial aquifer in the vicinity of the TCS.
- An electrical power, control, and communications system will be used to operate and control the different elements of the in-situ remediation system, and to integrate the in-situ remediation system with other

elements of the groundwater remedy. The electrical power, control, and communications system is discussed in further detail in Sections 2.4 and 2.5.

2.1.1 NTH IRZ

The NTH IRZ will act as a recirculation system in which water extracted via the four NTH IRZ Extraction Wells will be amended with carbon substrate and injected into the NTH IRZ line via the 24 NTH IRZ Injection Wells, resulting in a net flow of 0 gallon per minute (gpm). The NTH IRZ includes the following components:

- Four groundwater extraction wells (i.e., NTH IRZ Extraction Wells) situated at four locations (IRZ-1, IRZ-5, IRZ-9, and IRZ-23) within the NTH IRZ (see Figure 2.1-1).
- Carbon amendment facilities, located at the MW-20 Bench that will be used to amend the extracted groundwater with carbon substrate.
- Up to 24 injection wells (i.e., NTH IRZ Injection Wells) situated at 16 locations (IRZ-11, IRZ-13, IRZ-15, IRZ-16, IRZ-17, IRZ-19, IRZ-20, IRZ-21, IRZ-25, IRZ-27, IRZ-29, IRZ-31, IRZ-33, IRZ-35, IRZ-37, and IRZ-39) within the NTH IRZ (see Figure 2.1-1) that will be used to re-inject carbon-amended water into the aquifer.
- One provisional extraction well (IRZ-40) and up to 30 provisional injection wells situated at 19 locations within the NTH IRZ (see Figure 2.1-1) that may be installed and operated depending on the monitored performance of the NTH IRZ over time. Flexibility will be retained to adjust the locations of provisional wells in the future as the remedial program evolves. Provisional well locations will be discussed with the stakeholders prior to implementation. Criteria for installation and activation of the provisional wells are provided in Section 2.2.1 of the Sampling and Monitoring Plan in Volume 2 of this O&M Manual.
- Below-grade piping for the conveyance of extracted groundwater, carbon-amended water, fresh water, and/or water produced from routine remedy O&M activities (i.e., backwashing).
- A well maintenance system to facilitate routine backwashing of the injection wells and pipeline maintenance (see Section 4 below).
- A clean-in-place (CIP) pipeline maintenance system (see Section 5 below).

2.1.1.1 NTH IRZ Extraction Wells

Each NTH IRZ Extraction Well will have a flow rate ranging from 40 to 160 gpm at approximately 300 feet of water column (ft w.c.) total dynamic head (TDH). The nominal total extraction flow rate for the NTH IRZ Extraction Wells will be 300 gpm, with an anticipated range of 200 to 400 gpm (see Table 2.1-1; tables are located at the end of each section).

The NTH IRZ Extraction Wells will be constructed using up to 12-inch nominal diameter well casing with one or two screened intervals to target specific intervals of the geologic formation. Preliminary screen lengths for each of the NTH IRZ Extraction Wells are summarized in Table 2.1-1. Additional details on well construction are provided in Section 3.2.5.1 of the BOD Report and Drawing M-04-01 in Appendix A.

Electric motor-operated, submersible pumps will be deployed in each extraction well, and the pump intakes will be positioned above the screens to prevent dewatering of the screen and subsequent fouling. Dual screen extraction wells will be constructed with a dedicated pump and riser pipe for each well screen with the intervals separated using a pneumatic packer. The motors will be 460 volts alternating current (VAC), 3-phase, 60 hertz (Hz). The wellhead connection and control/monitoring devices, including flow meters, water level sensors, leak detection sensors, and submersible pump controls, will be contained within a below-grade concrete vault.

NTH IRZ wells configured as extraction wells will be connected to a groundwater conveyance header and will be routed to carbon amendment and well maintenance facilities located at the MW-20 Bench. Conveyance piping from extraction well IRZ-23 to the main groundwater conveyance header will be double-contained and include leak detection instrumentation at low points. Each NTH IRZ Extraction Well screened interval will include a sample port upstream of the point where groundwater from that screened interval exits the vault.

2.1.1.2 NTH IRZ Injection Wells

The nominal total NTH IRZ injection flow rate will be 300 gpm, with an anticipated range of 200 to 400 gpm. The anticipated nominal injection flow rates per well range from 4 to 20 gpm, with a maximum injection flow rate per well of 40 gpm (IRZ-11 and IRZ-13), as summarized in Table 2.1-1.

The NTH IRZ Injection Wells will be constructed using up to 12-inch nominal diameter well casing with one or two screened intervals to target specific intervals of the geologic formation. Preliminary screen lengths for each of the NTH IRZ Injection Wells are summarized in Table 2.1-1. Additional details on well construction are provided in Section 3.2.5.1 of the BOD Report and Drawing M-04-02 in Appendix A.

In-well components will include pneumatic packers, injection drop pipes, spring-loaded check valves, pressure transducers, backflushing pumps, and ancillary piping and fittings. The wellhead connections and additional control and monitoring devices including flow meters, leak detection sensors, and backflush pump controls will be contained within a below-grade concrete vault. Additional injection well vault components will include electrically actuated diaphragm, globe, or other suitable control valves to facilitate the periodic adjustment of injection flow rates, and pressure gauges, sample ports, and/or packer pressure control devices.

Each NTH IRZ Injection Well will be connected to a carbon-amended groundwater conveyance header and a backwash return header.

2.1.1.3 Carbon Amendment System (MW-20 Bench)

Carbon amendment facilities will be located at the MW-20 Bench. The system consists of a tanker truck offload bay; the primary carbon amendment, metering, and control equipment; the primary carbon substrate storage and carbon substrate storage instrumentation; and extraction well header network monitoring equipment. The carbon substrate will be delivered by tanker truck and stored in the carbon tank until it is metered into the extracted groundwater. Concentrated carbon amendment piping will be installed as double-contained with leak detection instrumentation at low points. Each carbon amendment pump (designated as PMP-IRZ00-0640, PMP-IRZ00-0641, and PMP-IRZ00-0642) is capable of delivering up to 230 gallons per hour (gph) of carbon substrate from the tank to the groundwater injection header(s).

Primary Carbon Amendment, Metering, and Control Equipment. The carbon amendment, metering, and control equipment will include valves, flow meters, chemical metering pumps, and ancillary equipment (see Drawing I-06-02 in Appendix A). Groundwater produced by the NTH IRZ Extraction Wells will be conveyed to the MW-20 Bench Carbon Amendment Building, where the amendment equipment will be used to control amendment of the extracted groundwater with carbon substrate. The amended water will then flow through an in-line static mixer before being routed to the carbon-amended groundwater conveyance header. A sample port and pressure gauge located downstream of the static mixer will be used for monitoring purposes. In addition, a sample port will be included upstream of the static mixer for diagnostic purposes.

Primary Carbon Substrate Storage. The primary carbon substrate storage system will include double-walled piping and tank systems, with secondary containment around the nozzles and connections as required by regulation and/or best practices.

The primary carbon substrate storage tank will be a 15,000-gallon, above-grade, horizontal saddle tank that is fully compatible with the contained substrate. The tank will have double-wall construction and an integral interstitial zone to provide secondary containment and appropriate ports for the installation of leak detection monitoring devices. The storage tank will include the following, as shown in Appendix A, Drawing M-06-04 or I-06-02:

- An integral overfill prevention device, attached to the tank fill line, designed to prevent filling of the tank beyond 90 percent of the rated capacity
- A primary pressure/vacuum (P/V) vent sized in accordance with applicable codes and regulations

- Emergency vents to prevent damage from failure of the primary P/V vent
- A vapor recovery system designed to capture any emissions generated during the storage tank filling process

In general, the carbon substrate storage tank piping network will be designed and constructed by the manufacturer to comply with applicable codes and requirements, including San Bernardino Fire Marshall and Mojave Desert Air Quality Management District requirements, which may dictate the specifications for external connections to the tank (e.g., for the tank fill line and vapor recovery line). The option of installing different types of fittings to minimize the potential of connecting to the wrong line will be considered with the manufacturer. The lines connected to the tank will also be identified with labels as appropriate.

Details of electrical classifications (in accordance National Fire Protection Association (NFPA) and California Fire Code electrical hazard classifications) are shown on the engineering drawings (C-06-03) provided in Appendix D of the BOD Report.

Carbon Substrate Storage Instrumentation. Carbon substrate storage instrumentation will include the following:

- Tank interstitial space fluid level sensors
- A primary tank level transmitter—radar, ultrasonic, physical reading, or pressure type—with a manual gauging port for operator verification
- A primary tank high level switch
- A primary tank fluid temperature sensor
- A visible beacon and audible alarm, within the MW-20 Bench only, to notify operators of a high level during tank filling operations
- A pipeline secondary containment leak detection system

Details are shown on Drawing M-06-04 or I-06-02 (see Appendix A).

Tanker Truck Unloading Pad. The tanker truck unloading pad will be constructed as a concrete slab and designed for at least 7,700 gallons (110 percent of the volume of one tanker truck).

Portable Tanks. The NTH IRZ Injection Well design will include manual addition ports to accommodate the potential use of portable tanks (5 to 1,000 gallon capacity) for the direct injection of carbon substrate solution at the wellheads.

2.1.2 Inner Recirculation Loop

The IRL will consist of the following system components:

- Five River Bank Extraction Wells (RB-1 through RB-5) installed along the Colorado River (see Figure 2.1-1).
- Four Inner Recirculation Loop Injection Wells (IRL-1 through IRL-4) installed near the western margin of the groundwater plume north of I-40 (see Figure 2.1-1).
- Up to four provisional River Bank Extraction Wells (RB-6 through RB-9, to be located within the approximate area shown in Figure 2.1-1), and three provisional Inner Recirculation Loop Injection Wells (IRL-5 through IRL-7;[1] see Figure 2.1-1) that may be installed and operated dependent on the monitored performance of the remedy over time. Flexibility will be retained to adjust the locations of provisional wells in the future as the remedial program evolves. Provisional well locations will be discussed with the stakeholders prior to implementation. Criteria for installation and activation of the provisional wells are provided in Section 2.2.2 of the Sampling and Monitoring Plan in Volume 2 of this O&M Manual.

[1] IRL-6 may alternatively be considered as an extraction well with extracted groundwater re-injected into the other IRL injection wells.

- Carbon amendment facilities, located at the MW-20 Bench, used to amend the extracted groundwater with carbon substrate, if needed.
- Above- and below-grade piping for the conveyance of extracted groundwater, carbon-amended water, fresh water, and/or water produced from routine remedy O&M activities.
- A well maintenance system to facilitate routine backwashing of the injection wells (see Section 4 below).

2.1.2.1 River Bank Extraction Wells

Four of the River Bank Extraction Wells (shown on Figure 2.1-1) are planned to be operated initially, although flexibility will be provided to operate any and all River Bank Extraction Wells at any given time. The nominal total extraction flow rate of these wells is 150 gpm, although flexibility will be provided to increase this flow rate to 500 gpm, if needed, or to decrease the extraction flow rate (e.g., during later stages of the remedial operation) based on monitored remedy performance (see Table 2.1-2). The nominal extraction flow rate will range from approximately 25 to 50 gpm per well at approximately 350 ft w.c. TDH, although flexibility will be provided for a maximum per well extraction flow rate of 170 gpm.

The River Bank Extraction Wells are currently anticipated to be constructed with 8-inch nominal diameter well casing, although up to 12-inch nominal diameter well casing may be used. The River Bank Extraction Wells will be constructed with one screened interval to target the deeper portions of the aquifer (see Table 2.1-2), as well as a second shallow screen interval, for potential future use, that will be isolated from the deeper screen interval with a pneumatic packer. Preliminary screen lengths for each of the River Bank Extraction Wells are summarized in Table 2.1-2. Additional details on well construction are provided in Section 3.2.5.1 of the BOD Report and Drawing M-05-01 in Appendix A.

As with the NTH IRZ Extraction Wells, an electric motor-operated, submersible pump will be installed in each River Bank Extraction Well; motors will be 460 VAC, 3-phase, 60 Hz. Other down-hole components will include pump discharge piping, and control and monitoring instrumentation. Each well will be connected to a groundwater conveyance header that will be routed to the carbon amendment facilities located at the MW-20 Bench. The wellhead connection and additional control/monitoring devices will be contained within a below-grade concrete vault similar to those for the NTH IRZ Extraction Wells. Each River Bank Extraction Well will include a sample port upstream of the point where groundwater from that well exits the vault.

2.1.2.2 Inner Recirculation Loop Injection Wells

Water injected via the Inner Recirculation Loop Injection Wells (see Figure 2.1-1) will include: (1) groundwater captured by the River Bank Extraction Wells and amended with carbon, as necessary, using the carbon amendment facilities located at the MW-20 Bench; and (2) fresh water from the freshwater supply system (see Section 2.2). The nominal total IRL injection flow rate will be 450 gpm, including 150 gpm from the River Bank Extraction Wells injected into the deep screens (lower approximately two-thirds of the saturated interval) at IRL-1 and IRL-2 and 300 gpm of fresh water injected at IRL-3 and IRL-4. Flexibility will be provided to inject a maximum total combined flow rate of up to 900 gpm into the Inner Recirculation Loop Injection Wells, which may include either or both of the above mentioned water sources at each well. Note that groundwater captured by the River Bank Extraction Wells will not be injected into the shallow screens (upper approximately one-third of the saturated interval) at IRL-1 and IRL-2, or into IRL-3 or IRL-4, without preapproval from the agencies. The anticipated nominal per well injection flow rates range from 75 to 200 gpm Table 2.1-2.

Water captured by the River Bank Extraction Wells will be amended with carbon substrate if the Cr(VI) concentrations are greater than 32 micrograms per liter (μg/L). The Sampling and Monitoring Plan in Volume 2 of this O&M Manual presents the monitoring plan for collecting and evaluating analytical data to determine whether or not carbon amendment will be required according to this criterion. If carbon amendment is required for the Inner Recirculation Loop Injection Wells, it will be conducted in a similar manner as for the NTH IRZ Injection Wells, following a similar data collection and operational adjustment framework as presented in the operational flowcharts in the Sampling and Monitoring Plan (Volume 2 of this O&M Manual). Similar to the NTH IRZ Injection Wells, the Inner Recirculation Loop Injection Well design will include manual addition ports to accommodate the

potential use of portable tanks (5- to 1,000-gallon capacity) for the direct injection of carbon substrate solution at the wellheads.

Inner Recirculation Loop Injection Wells will be constructed using up to 12-inch nominal diameter well casing. IRL-1 and IRL-2 will be installed as dual-screen wells with the shallow screen (upper one-third of the saturated interval) separated from the deep screen (lower two-thirds of the saturated interval) with a pneumatic packer. IRL-3 and IRL-4 will be installed with both a shallow screen (upper two-thirds of the saturated interval) and deep screen (lower one-third of the saturated interval), and are designed to accommodate a pneumatic packer for potential future isolation of the shallow and deep screened intervals. However, under the final nominal scenario, only fresh water will be injected into IRL-3 and IRL-4, and the shallow and deep screens in these wells will not be isolated. Preliminary screen lengths for each of the Inner Recirculation Loop Injection Wells are summarized in Table 2.1-2. Additional details on well construction are provided in Section 3.2.5.1 of the BOD Report and Drawings M-05-02 and M-05-03 in Appendix A. In-well components and wellhead connections will include valving and instrumentation similar to the NTH IRZ Injection Wells. The Inner Recirculation Loop Injection Wells will be connected to a carbon-amended groundwater conveyance header, a backwash return header, and the freshwater supply pipeline.

Below-grade piping between the IRL-4 valve/meter and well vaults will be installed in double-contained piping with leak detection instrumentation at low points. Due to the steepness of the access road, secondary containment is included between the meter vault and the well vault. A sump pump and concrete containment vault is included near the well vault to capture and recover fluids emanating from a release. This approach also improves safety during O&M. For example, during well maintenance, fluids can be pumped from the well directly into a temporary portable tank located near the meter vault located outside the ravine. This approach eliminates the need to haul a tank into the ravine.

2.1.3 TCS Recirculation Loop

The TCS Recirculation Loop will consist of the following system components:

- Two Transwestern Bench Extraction Wells, TWB-1 and TWB-2, installed northeast of the TCS (see Figure 2.1-1).
- Five East Ravine Extraction Wells, ER-1 through ER-4 and ER-6, installed within bedrock.
- Two provisional Transwestern Bench Extraction Wells, TWB-3 and TWB-4; one provisional East Ravine Extraction Well (ER-5); and up to five additional provisional East Ravine Extraction Wells (ER-7 through ER-11, to be located within the approximate area shown in Figure 2.1-1) that may be installed and operated dependent on the monitored performance of the remedy over time. Flexibility will be retained to adjust the locations of provisional wells in the future as the remedial program evolves. Provisional well locations will be discussed with the stakeholders prior to implementation. Criteria for installation and activation of the provisional wells are provided in Section 2.2.3 of the Sampling and Monitoring Plan in Volume 2 of this O&M Manual.
- Two TCS Injection Wells, TCS-1 and TCS-2, installed upgradient of the TCS.
- Carbon amendment facilities, located at the MW-20 Bench, used to amend the extracted groundwater with carbon substrate.
- Above- and below-grade piping for the conveyance of extracted groundwater, carbon-amended water, and/or water produced from routine remedy O&M activities.
- A well maintenance system to facilitate routine backwashing of the injection wells (see Section 4 below).

2.1.3.1 Transwestern Bench Extraction Wells

The Transwestern Bench Extraction Wells will be operated at any given time for a total extraction flow rate ranging from 2 to 30 gpm, with an anticipated combined nominal rate of approximately 22 gpm (see Table 2.1-3).

The expected nominal extraction flow rates per well will be 13 gpm (TWB-1) and 9 gpm (TWB-2) at approximately 320 ft w.c. TDH, although flexibility will be provided to operate each well at up to 15 gpm.

Transwestern Bench Extraction Wells will be constructed using up to 12-inch nominal diameter well casing with one discrete screened interval. Preliminary screen lengths for each of the TW Bench Extraction Wells are summarized in Table 2.1-3. Additional details on well construction are provided in Section 3.2.5.1 of the BOD Report and Drawing M-03-01 in Appendix A.

Similar to the NTH IRZ Extraction Wells, an electric motor-operated submersible pump will be installed in each TW Bench Extraction Well with the pump discharge piping and associated controls and monitoring instrumentation contained in a below-grade vault. Each well will be connected to a groundwater conveyance header that will be routed to the carbon amendment facilities located at the MW-20 Bench. Each TW Bench Extraction Well will include a sample port upstream of the point where groundwater from that well exits the vault.

2.1.3.2 East Ravine Extraction Wells

It is anticipated that the five East Ravine Extraction Wells will be operated at any given time for a combined nominal flow rate of 5 gpm (i.e., approximately 0.5 gpm per well for ER-1 to ER-4 and 3 gpm for well ER-6; see Table 2.1-3), although flexibility will be provided to operate up to a maximum total combined flow rate of 9 gpm.

East Ravine Extraction Wells will be constructed using up to 12-inch nominal diameter carrier casing set to the top of competent bedrock. A minimum of 20 feet of carrier casing is required to comply with State well regulations for a sanitary seal. Below the carrier casing depth drilling would proceed to the target depth and the well would consist of an open bedrock borehole (up to 5-inch-diameter) beneath the casing.

Similar to the Transwestern Bench Extraction Wells, an electric motor-operated submersible pump will be installed in each East Ravine Extraction Well with the pump discharge piping and associated controls and monitoring instrumentation contained in a below-grade vault. The vault for extraction well ER-6 will be installed above the base of the wash to prevent the vault from being flooded during rain events. Each well will be connected to a groundwater conveyance header that will be routed to the header of the extraction well network located northeast of the TCS. Each East Ravine Extraction Well will include a sample port upstream of the point where groundwater from that well exits the vault.

2.1.3.3 TCS Injection Wells

The two TCS Injection Wells will each receive approximately 13.5 gpm of carbon-amended groundwater for a combined nominal flow rate of 27 gpm (see Table 2.1-3), although flexibility will be provided to inject a maximum total combined flow rate of up to 75 gpm and up to 40 gpm per well.

TCS Injection Wells will be constructed using up to 12-inch nominal diameter well casing with two discrete screened intervals. Preliminary screen lengths for each of the TCS Injection Wells are summarized in Table 2.1-3. Additional details on well construction are provided in Section 3.2.5.1 of the BOD Report and Drawing M-03-02 in Appendix A.

In-well components and wellhead connections will include valving and instrumentation similar to the NTH IRZ Injection Wells. The TCS Injection Wells will be connected to a carbon-amended groundwater conveyance header and a backwash return header. The carbon-amended groundwater conveyance header will be routed to/from the carbon substrate amendment system located at the MW-20 Bench. Similar to the NTH IRZ Injection Wells, the TCS Injection Well design will also include manual addition ports to accommodate the potential use of portable tanks (5- to 1,000-gallon capacity) for the direct injection of carbon substrate solution at the wellheads.

2.2 Freshwater Supply

The Freshwater Supply System is an important part of the remedy. Fresh water is injected upgradient to push the Cr(VI) plume toward the NTH IRZ to reduce overall cleanup time, and to prevent westward spreading of the plume and in-situ byproducts. In addition, fresh water is also used for miscellaneous operational uses (for example, laboratory use, use at the carbon amendment facility, use at the Remedy-produced Water Conditioning Building, etc.). A new freshwater storage tank (TNK-FWST-0203) will be used to serve the remedy water demand. A schematic of the freshwater supply system is shown in Exhibit 2.2-1.

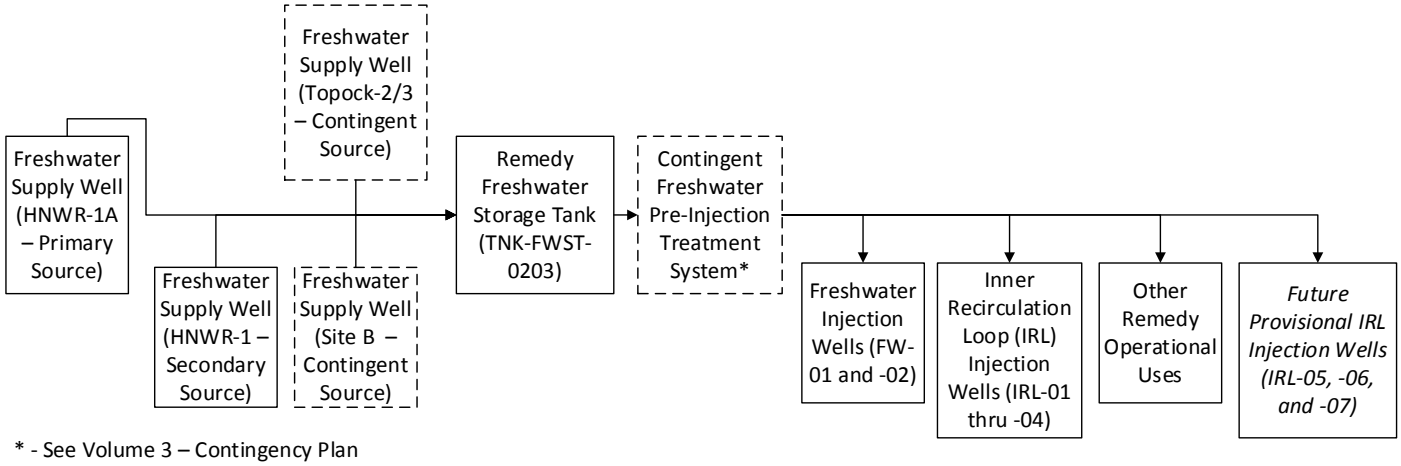

* - See Volume 3 – Contingency Plan

EXHIBIT 2.2-1
Freshwater Supply System Process Schematic
Groundwater Remedy Operation and Maintenance Manual
Volume 1: Operation and Maintenance Plan
PG&E Topock Compressor Station, Needles, California

2.2.1 Freshwater Supply Wells, Conveyance, and Storage

2.2.1.1 Purpose

In November 2010, the Havasu National Wildlife Refuge (HNWR) installed an irrigation well (HNWR-1) in Arizona to supply water for a re-vegetation project. Two freshwater supply wells, Site B and HNWR-1A, were installed by PG&E in October 2013 and June 2014, respectively. Both of these wells are also located on HNWR lands in Arizona. The HNWR-1A well will serve as the primary freshwater supply well for the groundwater remedy, while the HNWR-1 well will serve as a secondary supply well. The Topock-2/-3 wells (which currently supply water for Compressor Station uses) and the Site B well will serve as contingency freshwater supply sources, if needed. Locations of the primary, secondary, and contingent freshwater supply wells are shown in Figure 2.2-1.

The primary supply well, HNWR-1A, will pump fresh water to the new remedy freshwater storage tank at the TCS (TNK-FWST-0203). Fresh water is currently used for fire protection, cooling tower make up, use in sinks, etc. For the groundwater remedy, fresh water will be used for injection into remediation wells, and for miscellaneous operational uses as described in Section 2.2. Fire protection water for remedy facilities located on the Compressor Station, Transwestern Bench, and MW-20 Bench will be supplied from the existing TCS freshwater storage tanks.

2.2.1.2 Components

The primary freshwater supply well (HNWR-1A) will be equipped with aboveground well head equipment placed on two concrete pads - one for electrical and controls equipment and one for mechanical equipment. A 7-foot-high chain link fence and camera provide security for the aboveground equipment. The wellhead equipment includes:

- Electrical submersible pump
- Power panel and transformer

- Remote terminal unit
- Pressure switch and local indicator
- Pressure indicating transmitter
- Flowmeter and transmitter
- Level transducer and transmitter
- Local Hand-Off-Auto (H-O-A) switch
- Camera to remotely inspect conditions of well and equipment at well site
- Piping, valves, and fittings
- Sand separator and dry well

The HNWR-1A well will supply water via a new 12-inch conveyance pipeline; the material of construction for this new piping will be cement mortar lined steel aboveground and high-density polyethylene (HDPE) below-ground. Other pipeline components include expansion loops, pipe supports, air release valves, and fittings. The new 12-inch-diameter pipeline will follow the county road (underground), cross under the railroad overpass (trenchless technology not required), cross under I-40 (trenchless technology required), and cross the Colorado River to California via the Arched Bridge. From there the pipeline will run along the PG&E Line 300A gas pipeline maintenance road toward the Compressor Station. The pipeline will terminate in connections at the remedy freshwater storage tank (TNK-FWST-0203). The remedy freshwater storage tank will be a 10,000-gallon coated carbon steel tank equipped with piping, valves, fittings, level switches and transmitters, an overflow pipe, and a tank vent. A spare connection will be installed to provide fresh water for other possible future demands. Pipes will originate from this tank to serve Freshwater Injection Well FW-2 and the future provisional well located north of the TCS (i.e., IRL-6).

Midway along the PG&E Line 300A gas pipeline maintenance road, the freshwater pipeline will branch to the north (i.e., Pipeline J) to connect to the piping corridor located near NTH and the Compressor Station access road. This branch will pass by the MW-20 Bench facilities and then cross NTH toward the IM-3 treatment plant. This branch will serve the upland wells (FW-1, IRL-1 through IRL-4, as well as future provisional wells IRL-5 and IRL-7). In the event that pre-treatment of fresh water is required, all fresh water will be piped to the Compressor Station for treatment, and the treated fresh water will be conveyed along PG&E's natural gas pipeline right-of-way prior to joining the freshwater pipeline leading to NTH. The treated freshwater pipe will be installed concurrently with construction of the untreated freshwater pipe (i.e., Pipeline B).

If needed in the future, the existing HNWR-1 well can be tied into the freshwater supply system by extending wellhead piping to a flange located near the HNWR-1A well. The contingency Site B well can also be tied into the freshwater supply system by installing a 12-inch conveyance pipeline along County Road 10, to a flange located near the HNWR-1A well. Both of these wells will need to be outfitted with proper wellhead equipment prior to tie-in.

Existing supply wells Topock-2 and -3 currently supply fresh water to the TCS through an existing 6-inch pipeline that terminates at the existing TCS storage tanks. The final design includes a tie-in to this existing 6-inch freshwater pipeline, upstream of the existing TCS freshwater storage tanks that would allow use of Topock-2/-3 water as a primary contingency freshwater source for remedy operations when the Compressor Station is not receiving water from these wells. The tie-in location and associated piping/valves are located within the Compressor Station footprint.

2.2.1.3 Process Description

The well pump in HNWR-1A lifts groundwater to the surface in a pipe from which it is conveyed to the freshwater supply pipeline. The pump will be activated automatically when water levels are less than a pre-set level in the remedy freshwater storage tank (TNK-FWST-0203).

If needed in the future, a new pump can be installed in the HNWR-1 and Site B wells. The well pumps will be controlled in a similar manner as the HNWR-1A well pump.

2.2.1.4 Control System

The pump motor in the HNWR-1A well will be activated when: a) the water level in the remedy freshwater storage tank (TNK-FWST-0203) drops to below the low-level set point, b) water level in HNWR-1A is greater than the low-level set point, and c) pump discharge pressure is less than the high pressure set point. Initial control set points and approaches are included in Table 3.1-1 at the end of Section 3. These set points will be periodically adjusted based on system operational experience.

If needed in the future, the secondary supply well (HNWR-1) and contingency supply well (Site B) can be tied to the freshwater supply system; the pump motor controls are anticipated to be activated in a similar manner as the HNWR-1A pump motor control.

2.2.2 Conveyance to Injection Wells

2.2.2.1 Purpose

The conveyance piping transports stored fresh water to the Freshwater Injection Wells (see Section 2.2.3) and the Inner Recirculation Loop Injection Wells (see Section 2.1.2).

2.2.2.2 Components

Conveyance piping will be a combination of buried (HDPE) pipe and aboveground pipe (cement mortar lined steel). Pipe sizes will vary, but the trunk lines will be a minimum of 6 inches in diameter. The piping will be equipped with isolation valves (for maintenance and repair purposes) and air release valves (release air to prevent flow restrictions and make pumping efficient).

2.2.2.3 Process Description

Water will flow by gravity from the remedy freshwater storage tank (TNK-FWST-0203) to FW-2, or will be conveyed directly from the supply well (HNWR-1A) to the upland injection wells.

2.2.2.4 Control System

The conveyance piping has no control system components.

2.2.3 Freshwater Injection Wells

2.2.3.1 Purpose

Water supplied to the Freshwater Injection Wells is used to create a hydraulic push on the Cr(VI) plume to move it toward the NTH IRZ more quickly than natural processes would and to prevent westward spreading of the plume and the in-situ byproducts. Preliminary screen lengths for each of the Freshwater Injection Wells are summarized in Table 2.2-1.

2.2.3.2 Components

Each well includes piping, valves, instrumentation, controls, and pre-cast concrete vaults, located at the injection well sites. The wellhead will be located in one vault (“well vault”), and the process valves and flow meters will generally be located in a second vault (“meter vault”). Components include:

- Pre-cast concrete meter vault and separate well vault with spring assist lids
- Flow meters
- Pressure gauge and transmitter
- Air release valve
- Level transducer and transmitter
- Flow control valve (this will be an orifice type with an adjustable sleeve operated hydraulically; the valve will include a hydraulic actuator assembly including pump, fluid reservoir, and controller that is controlled through the Remedy SCADA system)
- Submersible backwash pump – see also Section 2.3.1, Generation – Routine Automatic Backwash

- Local H-O-A switch
- Level switches in the well and meter vaults
- Drop pipe
- Well seal with pre-fabricated holes for drop pipe, sounding tube, chemical injection, camera, and power and signal wires
- Process piping, valves, and fittings
- Local pressure gauges for O&M

2.2.3.3 Process Description

Freshwater Injection Wells FW-1 and FW-2 are designed to receive up to 200 and 100 gpm, respectively, under gravity flow from the remedy freshwater storage tank (TNK-FWST-0203) (see Table 2.2-1). Although FW-1 is capable of receiving fresh water by way of gravity flow from TNK-FWST-0203, FW-1 will receive fresh water directly from the freshwater supply well under normal operating conditions. FW-2 will receive fresh water from the remedy freshwater storage tank. Wells that receive water are in injection mode under remote control. Water level builds up in the casing and then spreads into the aquifer formation under gravity head.

2.2.3.4 Control System

Conditions for normal well operations (auto/remote mode) are as follows:

- Fresh water is in the storage tank (TNK-FWST-0203) above the low-level set point
- Water level in the well is below the high-level and pipeline pressure is less than the high-pressure set point
- Well is not in backwash mode (see Section 2.3.1.3 below)
- Well is not in another maintenance condition.

Control set points and approaches are included in Table 3.1-1 at the end of Section 3. These set points will be periodically adjusted based on system operational experience.

2.3 Remedy-produced Water Management

Remedy wells will require regular maintenance to sustain well efficiency and effective operations over the decades-long lifetime of the remedy. Wastewater generated during well maintenance falls into two categories: 1) routine backwash water and 2) periodic rehabilitation water. Other types of water produced from remedy operation, at smaller volumes, will also need to be managed. They include monitoring well sampling and development purge water, equipment decontamination wastewater, and rainwater that collects in remedy facility secondary containment. Collectively, these categories of wastewater are called remedy-produced water. An estimated 7.6 million gallons of wastewater is generated per annum. A schematic of the remedy-produced water management system is shown in Exhibit 2.3-1.

This section describes the equipment and materials associated with permanent facilities for managing remedy-produced water. The functions are divided into:

- Generation - Automatic Backwash
- Conveyance
- Conditioning
- Disposal/Reuse

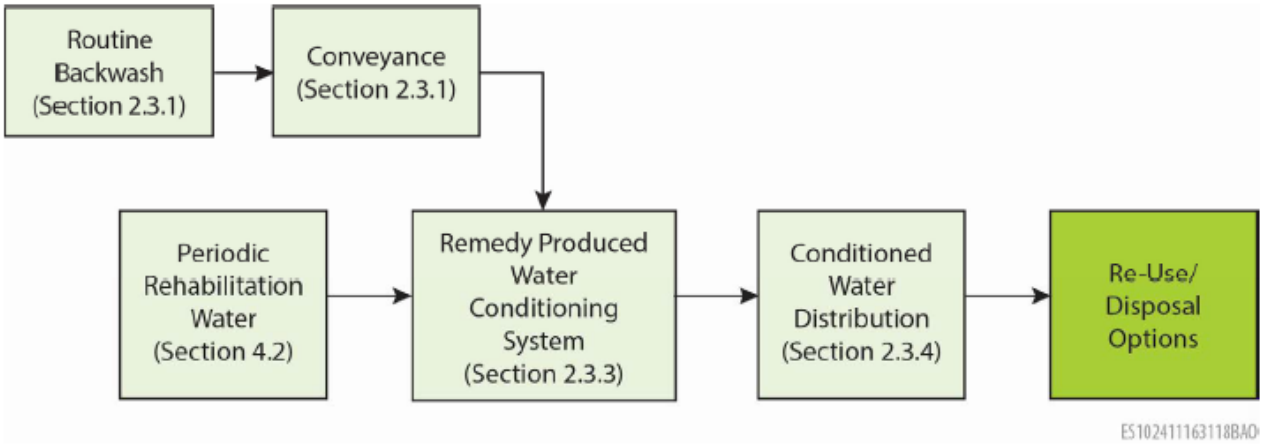

EXHIBIT 2.3-1
Remedy-produced Water Management Process Schematic
Groundwater Remedy Operation and Maintenance Manual
Volume 1: Operation and Maintenance Plan
PG&E Topock Compressor Station, Needles, California

2.3.1 Generation – Routine Automatic Backwash

Over 60 percent of the remedy-produced water is generated through automatic backwashing of injection wells. This section describes the mechanics of the automatic backwash system. Approaches to well performance monitoring and well maintenance are discussed in Section 4, Well Maintenance and Decommissioning, of this O&M Plan. Also discussed in Section 4 is the periodic well rehabilitation process that generates the first flush and second flush rehabilitation water, and the associated mechanics and logistical details for management of that water.

2.3.1.1 Purpose

The purpose of the routine maintenance that automatically generates the produced water is to maintain high well efficiency and prolong well life while minimizing disturbance and footprint associated with well maintenance.

2.3.1.2 Components

See Sections 2.1.1, 2.1.2, 2.1.3, and 2.2.3 for descriptions of components in the NTH IRZ, Inner Recirculation Loop, TCS, and Freshwater Injection Wells, respectively. The automatic backwash function in the remediation wells utilizes backwash pumps installed in the well casings. In the IRL and Freshwater Injection Wells, a two-way valve designed for both injection (recharge) and backwash (extraction) flow modes will be installed. The valve is equipped with a controller and hydraulic cylinder/pump assembly.

2.3.1.3 Process Description

The backwash pumps operate at pre-programmed intervals (initially set to a 10 minutes on/5 minutes off cycle repeated three times to complete a cleaning cycle, which is equivalent to 30 minutes total pumping time every week). The desired backwash flowrate is twice the injection rate; this rate will be adjusted as needed during operation. Produced water flows through the produced water conveyance lines to the Remedy-produced Water Conditioning Plant. Some produced water is also conveyed to the MW-20 Bench backwash frac tank (T-IRZ00-0621) before it is pumped to the Remedy-produced Water Conditioning Plant (see Section 2.3.2 below).

2.3.1.4 Control System

At pre-programmed time intervals in the NTH IRZ Injection Wells, the backwash pumps will be energized, start, and reach the desired backwash rate (initially set at twice the injection rate). Conditions for normal system operations (auto/remote mode) include water level being above the well low-level set point and water level in the backwash frac tank (T-IRZ00-0621) at the MW-20 Bench being lower than the high-level set point. Control set

points and approaches are included in Table 3.1-1. These set points may be adjusted periodically based on system operational experience.

At pre-programmed time intervals the FW-1, FW-2, and Inner Recirculation Loop Injection Wells flow control valves will open to enable the backwash pump to start and reach the desired backwash rate (initially set at twice the injection rate). Conditions for normal system operations (auto/remote mode) include water level above the well low-level set point, and water levels in the remedy-produced water influent tanks (TNK-RTP01-1101 through TNK-RTP01-1104 [see Section 2.3.3.2 below]) lower than the high-level set point. For operational flexibility, the produced water can be pumped to T-IRZ00-0621 at the MW-20 Bench or pumped directly to the influent tanks (TNK-RTP01-1101 through TNK-RTP01-1104). If T-IRZ00-0621 is used to hold the water, the water level must be below the high level set point. An actuated valve, FCV-IRZ00-0628T, enables the flow to bypass T-IRZ00-0621 or go directly to T-IRZ00-0621. Control set points and approaches are included in Table 3.1-1. These set points may be periodically adjusted based on system operational experience.

At pre-programmed time intervals in the TCS Injection Wells, the backwash pumps will be energized, start, and reach the desired backwash rate (initially set at twice the injection rate). Conditions for normal system operations (auto/remote mode) include water level above the well low-level set point and water level in the remedy-produced water influent tanks (TNK-RTP01-1101 though TNK-RTP01-1104 [see Section 2.3.3.2 below]) less than the high-level set point. Control set points and approaches are included in Table 3.1-1. These set points may be periodically adjusted based on system operational experience.

2.3.2 Conveyance of Unconditioned Remedy-produced Water

2.3.2.1 Purpose

Conveyance piping transports unconditioned backwash water from the wellheads to a main or trunk line, the backwash frac tank at the MW-20 Bench, and to the remedy-produced water influent tanks.

2.3.2.2 Components

The conveyance system consists of pipeline, air release valves, pigging stations or cleanouts, and isolation valves. Unconditioned water pipeline ranges from 2 to 6 inches in diameter, and pipe materials are HDPE.

The conveyance piping for unconditioned remedy-produced water is either buried in the soil or installed in pre-cast concrete trenches. Level switches and alarms are provided at low point locations in the concrete trench to detect pipeline leaks.

2.3.2.3 Process Description

Unconditioned remedy-produced water is pumped through the conveyance piping system to the backwash storage tank (T-IRZ00-0621) at the MW-20 Bench, and four influent tanks (TNK-RTP01-1101 to TNK-RTP01-1104) at the Remedy-produced Water Conditioning Plant.

2.3.2.4 Control System

Alarm conditions include the following:

- For pipe segments with below-ground concrete trenches, the conveyance piping is equipped with a leak monitoring system with level switches and alarms installed at low points. For direct buried pipe segments, potential leaks will be monitored by measuring backwash pump discharge pressure and flow rates. In addition, annual pressure testing of these segments will be performed as routine operation. This will apply to over 60 percent of the approximate 15,000 feet of piping sections with remedy-produced water pipes.

Further information on control set points and approaches are included in Table 3.1-1. These set points may be periodically adjusted based on system operational experience.

2.3.3 Conditioning

2.3.3.1 Purpose

The conditioning system is used to treat the remedy-produced water in order to make it suitable for re-use or re-injection onsite. The conditioning system is divided into a Remedy-produced Water A-side (Remedy A-side) and a Freshwater B-side with identical process streams as shown on Exhibit 2.3-2. The A-side is designed to process potentially "dirtier" influent water, and the B-side is designed to process potentially "cleaner" influent water. This design will enable more flexibility in segregating and managing produced water streams.

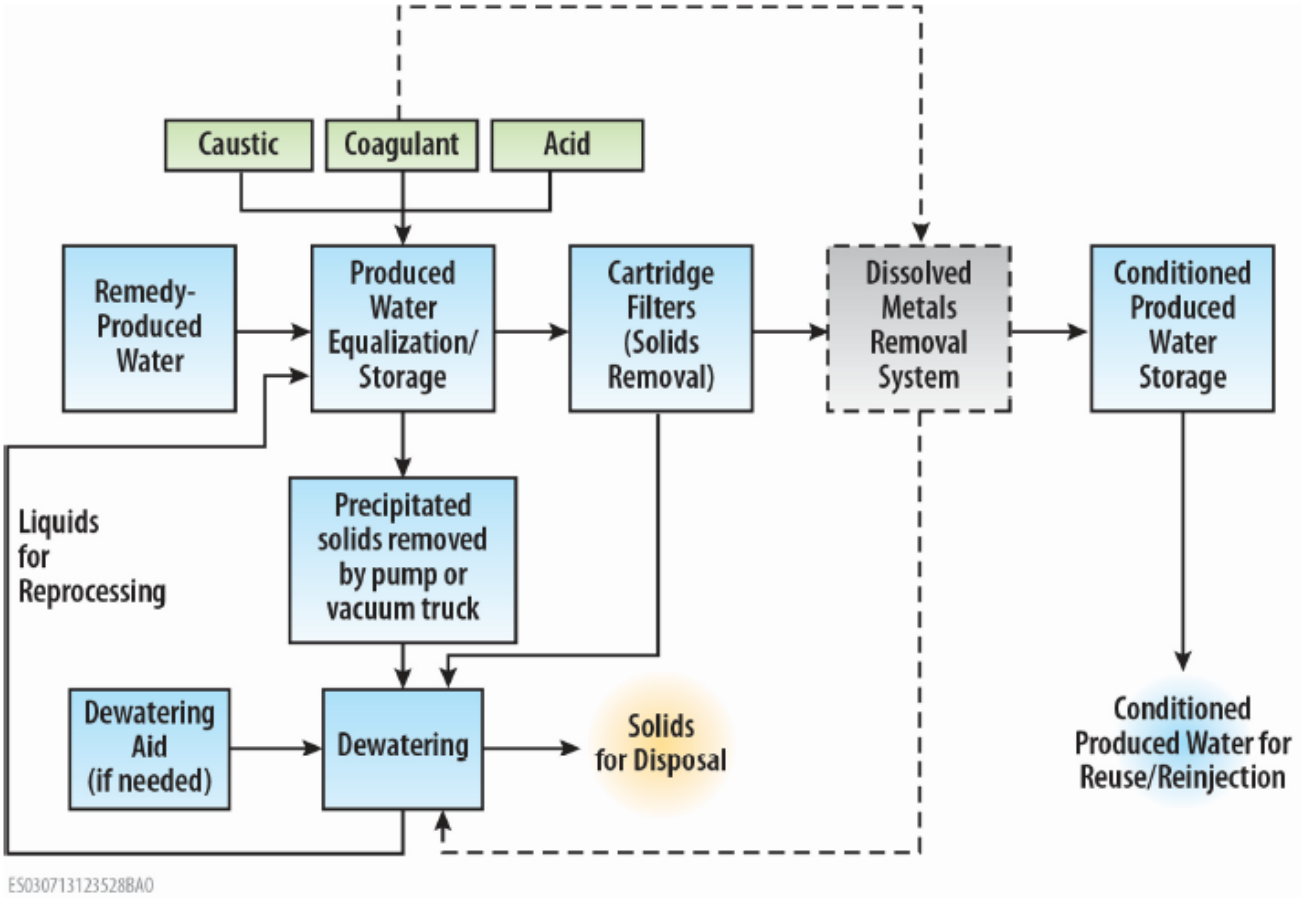

Note: See O&M Volume 3 (Contingency Plan) for details on the Contingent Dissolved Metals Recovery System (DMRS)

EXHIBIT 2.3-2
Conditioning System Process Schematic
Groundwater Remedy Operation and Maintenance Manual
Volume 1: Operation and Maintenance Plan
PG&E Topock Compressor Station, Needles, California

2.3.3.2 Components

The conditioning system is located at the Compressor Station, with the majority of the equipment housed inside the Remedy-produced Water Conditioning Plant. The storage tanks for unconditioned water (i.e., influent) and conditioned water (i.e., effluent) are also located at the Compressor Station, but are outside of the conditioning plant.

The **Unconditioned Water Storage** system includes the following major components:

- Influent storage tanks
- Influent water tank farm recirculation pumps

- Eight built-in process eductors on the influent storage tanks (2 on each tank) for mixing water in the tanks by recirculation
- Caustic feed tank and pump system
- Acid feed tank and pump system
- Coagulant feed tank and pump system
- Future provisional dewatering aid supply system
- pH/conductivity meters on the recirculation piping of the influent tanks
- Turbidity meters on the recirculation piping of the influent tanks
- Solids pump
- Influent tank farm and chemical storage area sump pumps
- Pneumatic actuated valves for flow diversion on the tanks
- Level elements/transmitters for tanks
- Level switches for sumps
- Process piping, valves, and fittings

The **Conditioning** system includes the following major components:

- Filter feed pumps with variable frequency drives (VFDs)
- Duplex cartridge filters
- Liquid phase separators
- Differential pressure indicators/transmitters for each of the cartridge filters
- One flow meter on the discharge side of the Remedy A-side and Freshwater B-side duplex filters
- Liquid phase separator sump pump
- Pneumatic actuated valves for flow diversion on the filter skids
- Level switch for sump
- Process piping, valves, and fittings
- Air compressor for instrument and utility compressed air

The **Conditioned Water Storage** system includes the following major components:

- Remedy A-side conditioned water tank farm consisting of two frac tanks with secondary containment
- Freshwater B-side conditioned water storage tank
- pH/conductivity meters on the Remedy A-side conditioned water tanks' influent piping
- Turbidity meter on the Remedy A-side conditioned water tanks' influent piping
- Conditioned water tank farm sump pump
- Pneumatic actuated valves for flow diversion on the Remedy A-side conditioned water tanks
- Level elements/transmitters for tanks
- Level switches for conditioned water tank farm sump
- Process piping, valves, and fittings

2.3.3.3 Process Description

The conditioning system is divided into two identical systems:

- The "Remedy A-side" is for "dirtier" water from the IRZ and carbon-amended injection wells (both backwash and second flush rehabilitation water) and first flush rehabilitation water from all sources.
- The "Freshwater B-side" is for "cleaner" water from the injection wells receiving fresh water (both backwash and second flush rehabilitation water).

The Remedy A-side and Freshwater B-side systems will work in the same fashion and will have the capability to operate in batch or continuous modes. The operational mode for each process side may be different; however, in general, the batch mode is better suited for produced water containing more solids. Detailed SOPs for both batch and continuous operating modes are included in Appendix B of this O&M Plan.

Batch Sequence

The general conditioning sequence under batch mode begins once the influent storage tanks (TNK-RTP01-1101 through -1104) are full and is as follows:

1. Add caustic to adjust the pH (as needed)
2. Add coagulant to aid in settling solids (will be used normally for Remedy A-side produced water)
3. Add acid to adjust the pH (as needed)
4. A dewatering aid (future provisional) to assist in the dewatering of the influent tank bottoms prior to pumping to the liquid phase separators
5. Settling and pumping out solids from the tank bottom to liquid phase separators (as needed)
6. Pump the water from the tanks with the filter feed pumps through the filters and to either the Freshwater B-side Conditioned Water Storage Tank (TNK-RTP01-1410) or the Remedy A-side Conditioned Water Tank Farm (TNK-RTP01-1401 and TNK-RTP01-1402)

The influent tanks are equipped with eductors and recirculation pumps to mix the water during the first four steps in the sequence.

Continuous Mode Description

Under continuous mode, the process begins when the influent tanks are full and this initiates the filter feed pumps which convey the water from the influent storage tanks to the cartridge filters and then to either the Freshwater B-side Conditioned Water Storage Tank (TNK-RTP01-1410) or the Remedy A-side Conditioned Water Tank Farm (TNK-RTP01-1401 and TNK-RTP01-1402).

Processing Unconditioned Water

In some instances, first flush rehabilitation water may be directed from the influent tanks to the Compressor Station wastewater tank discharge connection to be discharged to the existing TCS evaporation ponds (see Section 2.7 below). This would apply in cases as determined by PG&E based on such factors as pond capacity and incoming produced water flows. The filter feed pumps will be manually activated to move the water to the Compressor Station wastewater tank discharge connection directly.

2.3.3.4 Control System

Normal operations (auto/remote mode) for the conditioning system include (1) water levels in the influent tanks are above the low-level set point, and (2) water levels in the conditioned water tanks are below the high-level set point. Control set points and approaches are included in Table 3.1-1 at the end of Section 3. These set points may be periodically adjusted based on system operational experience.

2.3.4 Conditioned Water Distribution

2.3.4.1 Purpose

Conditioned remedy-produced water will be distributed for reuse and re-injection onsite. In the event the onsite reuse/reinjection options are not available or the conditioned water fails to meet the effluent design criteria, the water will be disposed of at the TCS evaporation ponds, or trucked off site.

2.3.4.2 Components

The distribution system consists of:

- Pumps, piping, and control valves
- Truck fill station pump at the decontamination pad in TCS
- Conditioned water transfer pumps
- Additional valves and fittings

2.3.4.3 Process Description

The Remedy A-side Conditioned Water Tank Farm supplies conditioned water to the IRZ wells by pumping water across the Compressor Station to the pipelines leading to the MW-20 Bench where the pipe will enter the conditioned water frac tank, T-IRZ00-0620. The IRZ wells will be supplied from the T-IRZ00-0620 tank. As a backup measure, Remedy A-side conditioned water can also be pumped to the TCS evaporation ponds via connection to the Compressor Station wastewater tank discharge.

The Freshwater B-side Conditioned Water Storage Tank (TNK-RTP01-1410) supplies conditioned water to the MW-20 Bench conditioned water frac tank, T-IRZ00-0620, and from there to the NTH IRZ wells, which are the primary destination, by gravity flow. Freshwater B-side conditioned water can also be pumped to the TCS truck fill station under manual mode or, as a future provisional option, sent to the cooling tower makeup line.

2.3.4.4 Control System

Normal operations (auto/remote mode) are when the conditioned water tank levels are above the low-level set point, and the destination has capacity to receive the flow. The T-IRZ00-0620 tank at the MW-20 Bench will receive flow if the water level in the tank is below the high-level set point. The discharge line to the TCS evaporation ponds from the Compressor Station wastewater tank will be available to receive flow from the conditioned water tank farm if the Compressor Station wastewater tank discharge pumps are not operating and the wastewater tank level is below the high-level setpoint. Control set points and approaches are included in Table 3.1-1. These set points may be periodically adjusted based on system operational experience.

2.4 Power Supply and Distribution

At the final design stage, it is estimated that the groundwater remedy could require up to 4.3 million kilowatt-hours of electricity annually (see Appendix A, drawing E-00-33 for energy usage calculations). The primary power supply source for the remedy facilities in California will be power generated by the PG&E Topock Compressor Station. For the freshwater supply well (HNWR-1A) in Arizona, the power supply source will be power provided by Mohave Electric Cooperative. Secondary power supply can be generated from small photovoltaic solar panels at the workshop building and parking shade structure at Moabi Regional Park, and at select remote well locations. In addition, a portable, rental backup generator of similar make and model of the existing generator (Isuzu Model 6WG1X) will be mobilized onsite as needed during project implementation to provide power. The power supply for planned improvements at the TCS evaporation ponds and for the Moabi Regional Park facilities are discussed in Sections 2.7 and 2.8, respectively. An uninterruptible power supply (UPS) is also provided for key equipment such as control systems.

The primary power system will be transmitted along the pipeline corridors to serve remedy facilities located in California (including wells, aboveground buildings, etc.). Power will be supplied from the TCS at 480 VAC and will be stepped up to 12 kVAC with a 1,000 kilovolt-ampere (kVA) transformer. At each load center, a step-down transformer will return the voltage to 480 VAC 3 phase. Six load centers are currently planned with a transformer and distribution equipment at each one. The transformers at the load centers will range in size from 225 kVA to 300 kVA, and will be mounted aboveground on shallow concrete foundations. At each well or other load, a motor control panel will be installed. Voltage will also be transformed to 120 VAC, single-phase for instrumentation, lighting, and auxiliary loads. The medium voltage system will consist of electrical cable installed in conduits that are directly buried or placed in conduit in underground concrete trenches. While the National Electrical Safety Code (NESC) requires burial depths of 30 inches for medium voltage, the final design includes a minimum depth of 36 inches for buried medium voltage power. If required to avoid conflict(s) with other utilities, power conduits may have to go deeper; typical vertical separations from pipes could be 6 to 12 inches. For low voltage (up to 480 volts), the minimum depth is 18 inches for buried power (for details on depths, see engineering drawings in Appendix D to the BOD Report). Lightning protection systems and equipment will be provided for all buildings and major structures. All electrical systems and equipment will be grounded.

2.5 Remedy SCADA

A SCADA system will be installed for controlling and monitoring the remedy. The Remedy SCADA (software, servers, and personal computer operator terminals) will be located inside the Operations Building at the Transwestern Bench. From the OITs (and possibly mobile tablets), it will be possible to initiate operation of all pumps, monitor all system status and alarm data, change control set points, and perform all remote control functions. The main components of the SCADA system include the following:

- OIT or HMI devices that present process data to a human operator, and through which the human operator monitors and controls the process
- A supervisory (computer software) system that gathers (acquires) data on the process and sends commands (control) to the process
- Remote terminal units (RTUs) that are connected to sensors in the process, converting sensor signals to digital data and sending digital data to the supervisory system
- Programmable logic controllers (PLCs) (also called digital controllers) will be used as field devices because they are more economical, versatile, flexible, and configurable than special-purpose RTUs, or can be used in a supervisory control function
- Communication infrastructure connecting the supervisory system to the to the PLCs and then from PLCs to their respective RTUs
- Various process and analytical instrumentation (e.g., flow, pH, and conductivity measurement)

The Remedy SCADA system will communicate with numerous digital controllers organized into six nodes (see below) and PLCs for the freshwater supply well(s) in Arizona. These devices will provide local control of one or more pieces of process equipment or process/ mechanical systems. The data from the digital controllers will be displayed on the OITs/HMIs. The digital controllers will monitor their associated equipment or well status and associated instrumentation, including limit switches, flow rates, pressures, well water levels, etc. The information from wells will be transmitted back to the main control station using wires, fiber-optic communications, radio transmission or other wireless communication methods (e.g., information from freshwater supply well[s] in Arizona; select monitoring wells in the floodplain/along the NTH IRZ, near the TCS, and in the East Ravine as necessary; and the equipment at the TCS ponds will be transmitted via radio to the PG&E Station PLC and from the Station PLC network to the Remedy SCADA). Various other systems including carbon substrate amendment storage and dosing as well as the remedy-produced water conditioning process will be monitored and will have local process control capabilities at the equipment location(s), as well as being remotely controllable from the Operations Building. The Remedy SCADA will communicate to the TCS Facilities via the PG&E Station PLC network (e.g., receive permission to discharge remedy-produced or conditioned water to the TCS evaporation ponds). The control nodes will have a PLC and an OIT for operators to monitor and control system equipment. The 6 nodes are as follows:

- Node 1 – Transwestern Bench facilities, and wells TWB-1, TWB-2, IRZ-38 to IRZ-40, ER-1 to ER-4, and ER-6 (and future provisional TWB-3, TWB-4, ER-5, and ER-7 to ER-11).
- Node 2 – Wells IRZ-29 to IRZ-37, RB-3 through RB-5 (and future provisional RB-6 and RB-7).
- Node 3 – MW-20 Bench Facilities and wells IRZ-16 to IRZ-28.
- Node 4 – Wells IRZ-1 to IRZ-15, RB-1, and RB-2 (and future provisional RB-8 and RB-9).
- Node 5 – Wells IRL-1 to IRL-4, and FW-1 (and future provisional IRL-5 and IRL-7).
- Node 99 – Remedy Produced Water Conditioning Facilities and wells FW-2, TCS-1, and TCS-2 (and future provisional well IRL-6, contingency Freshwater Injection Pre-Treatment System and Dissolved Metals Removal

System), as well as remote site radio for the freshwater PLCs located in Arizona and select remote monitoring wells.

The Remedy will have security equipment such as cameras, intrusion alarms, and card readers at remote facilities. The Remedy SCADA will monitor the security equipment via an interface at the Operations Building. This information will be communicated to PG&E's utility data network to be monitored by PG&E's security center.

2.6 Institutional Controls

ICs are legal and administrative mechanisms adopted to limit or prohibit activities on specified property that could interfere with the integrity of the remedy or compromise the continued protection of human health and the environment. There are two categories of ICs:

- **Category 1 ICs – The objective of these ICs is to prevent the use of groundwater and to protect the hydraulic integrity of the remedy.** This objective will be met by prohibiting the installation of new groundwater wells in specified areas for purposes other than site investigation and remediation activities as directed by the California Department of Toxic Substances Control (DTSC) and the U.S. Department of the Interior (DOI).
- **Category 2 ICs - The objective of these ICs is to protect the integrity of the physical elements of the remedy and to ensure access for construction and O&M.** This objective will be met by restricting future development and surface uses of the land in specified areas that could compromise the integrity of the remedial facilities or otherwise interfere with the construction and operation of the facilities and the ability for PG&E to construct, monitor, operate, and maintain the remedy.

Figure 2.6-1 at the end of this section shows the proposed area for which to apply Category 1 ICs, unless a Category 1 IC is determined to not be necessary by DTSC and DOI, as of the final design stage. As for Category 2 ICs, PG&E is the process of obtaining access agreements and other approvals/ permits/agreements with the appropriate agencies and landowners (see Section 5 of the Final BOD for details). PG&E is working towards obtaining all non-federal access agreements within 30 days of DTSC's approval of the Final Design and C/RAWP and within 90 days of DOI's request for such access agreements, consistent with the timing requirements in the Corrective Action Consent Agreement between PG&E and DTSC (DTSC 1996) and the Consent Decree (CD) between PG&E and the United States, on behalf of DOI (DOI 2013).

2.7 Improvements at TCS Evaporation Ponds

One of the management options identified for remedy-produced water is disposal at the existing TCS evaporation ponds (other options include injection into the IRZ wells, re-use in cooling towers, and off-site disposal). Water accumulated in the ponds will evaporate over time. In the event that the ponds are full (i.e., water level in the ponds reaches the maximum level allowed by the Colorado River Basin Regional Water Quality Control Board [RWQCB]), water can also be trucked off-site via the truck loading station at the ponds. The preferred method of water disposal is evaporation; therefore, a new drip system and agitators will be installed to enhance evaporation at the ponds. An automated system for maximizing pond surface area will be installed.

By design, discharge to the TCS evaporation ponds is and will continue to be fully contained, thereby designed to prevent any leaks. In layers (from top to bottom), each pond has a new 60-mil HDPE top liner; the original 60-mil HDPE primary liner (with repairs); a leachate collection and removal system (LCRS); and a secondary 40-mil HDPE liner underlain by 2 feet of low-permeability clay.

The LCRS functions as an early warning system to prevent leaks by enabling a determination of whether the top liner system has been compromised, prior to a potential release of pond water to the environment. In addition, in the area immediately adjacent to the TCS ponds, lysimeters were installed underneath the clay base, and seven groundwater monitoring wells were installed to detect leaks. The groundwater and vadose zone monitoring systems are sufficient to allow detection of potential releases at the earliest possible time or before discharge reaches groundwater (groundwater is between approximately 160 and 190 feet below the bottoms of the ponds).

2.7.1 Purpose

The existing evaporation ponds are used by the TCS to store and evaporate non-hazardous waste water discharged from the Compressor Station. The groundwater remedy will increase the load on the ponds beyond their current capacity under some circumstances. As such, the evaporation rate must be increased in order to accommodate the addition of remedy-produced water to the ponds.

In addition, the ability to pump pond water to tanker trucks for transport off site will be improved by the installation of secondary containment for water transfer equipment and a truck staging area.

2.7.1.1 Components

The layout of the evaporation enhancement equipment is shown in Exhibit 2.7-1. Remedy-produced water will be discharged to the ponds through the existing conveyance pipeline. Existing ponds number 3 and 4 will be equipped with new drip systems and agitators to increase the evaporation rate. Cameras will be installed to allow for remote monitoring of the pond level and system to ensure proper operation. New valves will be placed on the discharge points to the ponds to remotely control filling. The operation of these new automatic valves will be automatically controlled to maximize pond surface area. The system equipment includes:

- Electrical submersible pumps
- Pontoon platforms
- HDPE pipe
- Electric generator and control panel
- Electrical cabling
- Discharge actuator valves
- Conductivity meter
- Liquid level sensor
- Camera and transmitter
- Local H-O-A switch
- Mechanical agitator/drip line
- Electrical outlets to supply power for temporary pumps as needed for balancing pond levels
- Secondary containment for water transfer equipment and truck staging area

The recirculation and transfer pumps at the TCS evaporation ponds will be powered by a new natural gas-fueled reciprocating internal combustion engine (RICE) electrical power generator housed in a new enclosed utility building located within the TCS evaporation ponds fence line. Auxiliary equipment planned for installation at the TCS evaporation ponds (e.g., lighting, controls, sensors, security cameras, and valve actuators) will be supplied with 24-volt direct current (VDC) power by new thermoelectric generators (TEGs) installed in a secure fenced area adjacent to the new utility building. A transfer switch will provide for the flexibility of supplying power to the auxiliary equipment from the RICE.

Natural gas for the new generators will be piped from PG&E's natural gas Line 300B (Exhibit 2.7-1). A natural gas regulator set and isolation valves will be installed in the same secure fenced area as the TEGs, with flexible connections to both generators. Power will be transmitted via electrical cable installed in underground conduit running from the utility building and TEGs to each load.

2.7.1.2 Process Description

Remedy-produced water will be discharged to the existing evaporation ponds via the existing conveyance pipeline. Each pond will have an electronically controlled actuator valve to control which pond receives water. Pond water will be pumped from a sump in the bottom of the pontoon platform to the upper perimeter of the pond via HDPE pipe, which runs along the north- and east-facing walls of the ponds. Water runs down the pond walls through perforations in the pipe.

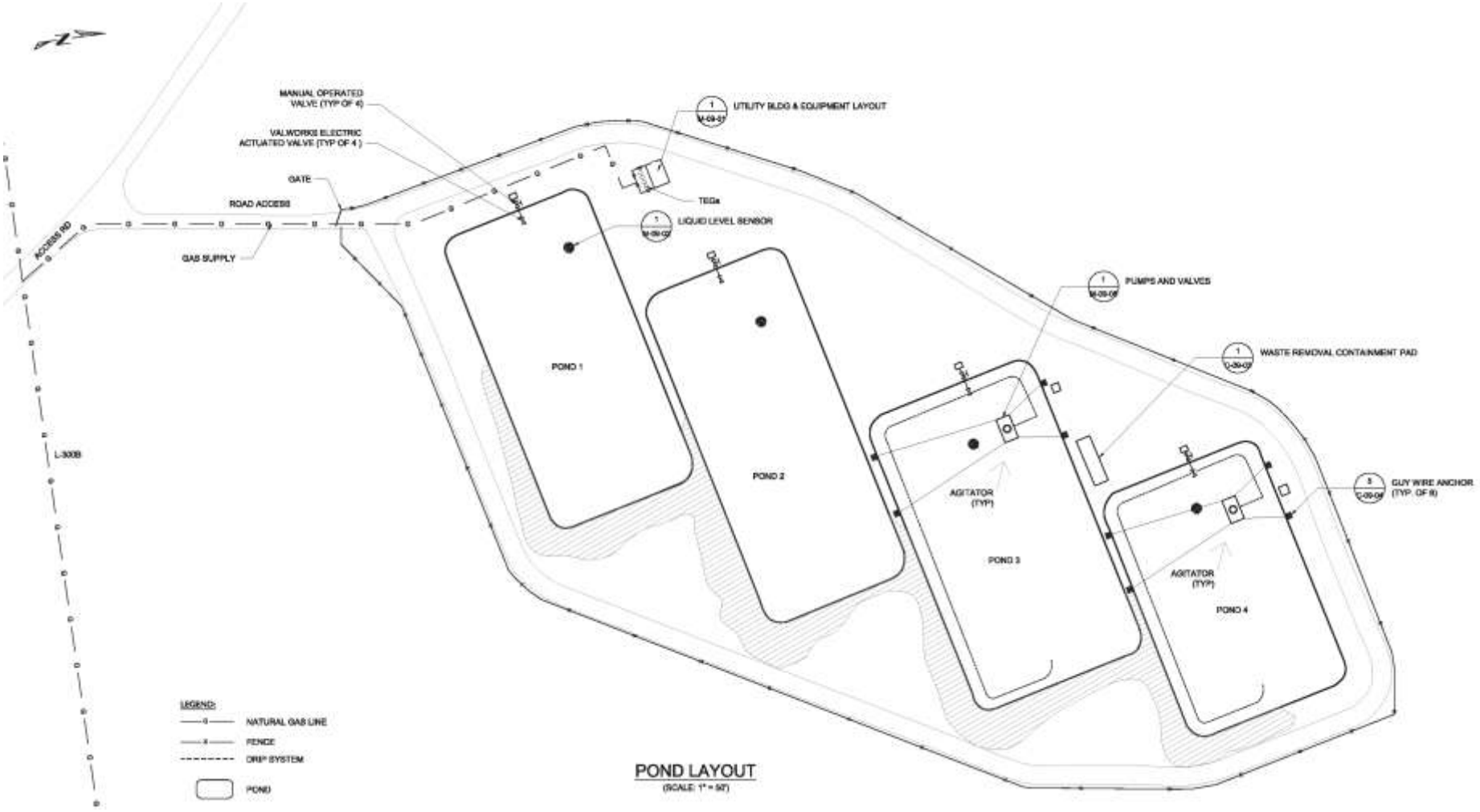

EXHIBIT 2.7-1
Layout of Evaporation Enhancement Equipment at TCS Evaporation Ponds
Groundwater Remedy Operation and Maintenance Manual
Volume 1: Operation and Maintenance Plan
PG&E Topock Compressor Station, Needles, California

2.7.1.3 Control System

The drip system will be activated automatically when pond levels exceed the programmed set points. Levels are monitored by liquid level sensors, and alarms (silent type) are initiated by liquid level detectors at the freeboard markers. The programmed set points will be periodically adjusted based on system operational experience.

2.8 Long-Term Remedy Support Area at Moabi Regional Park

Moabi Regional Park is located approximately 1.5 miles northwest of the TCS site and is accessible via Park Moabi Road and National Trails Highway. A portion of the northwest area of Moabi Regional Park will be used for long-term O&M support functions, including on-site sample processing, and equipment and vehicle storage, decontamination, and maintenance.

Structures in the long-term remedy support area will include: the PG&E office trailer, serving as PG&E's primary office and meeting space for long-term O&M management; the workshop building (including a sample processing area, maintenance bay, and tech shop); a decontamination pad; and a parking shade structure. Utilities will be provided to these structures as follows:

- **Electrical Power** – The primary power supply will be provided by the City of Needles via underground feed from a nearby utility pole to a transformer located on the utility pad in the northeast portion of the yard. Backup power will be provided via an on-site diesel generator (Kohler Power Systems 200REOZJF) with an integral, double-walled fuel tank. The electrical meter, associated switchgear, and distribution panel board will be housed in an equipment rack located on the utility pad. Power will be supplied as 3-phase 208 VAC.

  Photovoltaic solar panels mounted on the parking shade structure and workshop building will also provide power to the long-term remedy support facilities.

- **Potable Water** – The potable water system for the long-term remedy support area will consist of two 5,000-gallon polyethylene tanks connected in series to a skid-mounted booster pump system and pressure (bladder) tank located on the utility pad. Potable water will be trucked to the tanks from an offsite source. Buried HDPE or polyvinyl chloride (PVC) pipe routed from the pressure tank outlet will supply water to the PG&E office trailer, workshop building, decontamination pad hydrants, and other yard hydrants.

- **Sewer and Wastewater** – Sewage generated from the Moabi Regional Park long-term remedy support area will be collected in two 10,000-gallon buried fiberglass-reinforced plastic tanks, connected in parallel, via connections to the PG&E office trailer and workshop building (restrooms and shop sink). The tanks will be emptied and removed sewage hauled off site as needed.

  Wastewater collected from the decontamination pad and sample processing area sinks in the workshop building will be segregated for disposal. This wastewater will be transferred (via underground pipe via gravity flow) to a separate, double-contained 1,000-gallon decontamination water storage tank located below grade near the utility area. Water from the decontamination water storage tank will be trucked to the appropriate location for management as described in Section 3.8.

- **Fire Protection** – As a conservative safety measure, fire sprinklers will be installed in the workshop building. The PG&E office trailer will also be equipped with sprinklers. A booster pump and 15,000-gallon water storage tank located on the utility pad will provide fire suppression water for the sprinkler system. The fire protection system will be designed to provide 1,500 gallons per minute of flow for a duration of 10 minutes.

- **Telecommunications** – Telecommunications services will be available from Frontier Communications and will be brought in with the electrical line (i.e., via underground feed from the nearby utility pole to a telecommunications panel located on the utility pad).

Currently, the potable water, sewer, and fire protection systems are designed as standalone systems. However, PG&E will continue to coordinate with San Bernardino County regarding potential future connection to the Moabi Regional Park water, sewer, and fire water systems.

TABLE 2.1-1
Final Remediation Well Design Parameter Summary: National Trails Highway IRZ Wells
Groundwater Remedy Operation and Maintenance Manual
Volume 1: Operation and Maintenance Plan
PG&E Topock Compressor Station, Needles, California

Well Location ID[a]	Final Injection/Extraction Rate per Model Layer (gpm)			Final Well Screen Length (feet)	Model Layer Saturated Thickness (feet)	Final Well Depiction	Final Well Count	Final Future Provisional Well Count	Final Well Coordinates[e]	
	Nominal	Minimum	Maximum						X	Y
IRZ-1 (Extraction)[b]									7615297.1	2104063.8
Layer 1	20	20	80	120	65	Dual Screen Well	1	0		
Layer 2					93					
Layer 3	20	20	80	180	124					
Layer 4					79					
IRZ-2									*7615314.7*	*2104010.3*
Layer 1	*0*	*0*	*6*	*50*	*71*	*Dual Screen Well*	*0*	*1*		
Layer 2	*0*	*0*	*6*	*70*	*93*					
Layer 3	*0*	*0*	*6*	*100*	*119*	*Dual Screen Well*	*0*	*1*		
Layer 4	*0*	*0*	*6*	*50*	*72*					
IRZ-3									*7615415.6*	*2103957.2*
Layer 1	*0*	*0*	*6*	*70*	*86*	*Dual Screen Well*	*0*	*1*		
Layer 2	*0*	*0*	*6*	*80*	*96*					
Layer 3	*0*	*0*	*6*	*90*	*109*	*Dual Screen Well*	*0*	*1*		
Layer 4	*0*	*0*	*6*	*40*	*63*					
IRZ-4									*7615392.1*	*2103849.5*
Layer 1	*0*	*0*	*6*	*70*	*90*	*Dual Screen Well*	*0*	*1*		
Layer 2	*0*	*0*	*6*	*70*	*93*					
Layer 3	*0*	*0*	*6*	*80*	*100*	*Dual Screen Well*	*0*	*1*		
Layer 4	*0*	*0*	*6*	*40*	*57*					
IRZ-5 (Extraction)[b]									7615445.4	2103825.7
Layer 1	40	20	80	150	93	Dual Screen Well	1	0		
Layer 2					93					
Layer 3	40	20	80	140	99					
Layer 4					56					
IRZ-6									*7615440.8*	*2103744.7*
Layer 1	*0*	*0*	*6*	*70*	*91*	*Dual Screen Well*	*0*	*1*		
Layer 2	*0*	*0*	*6*	*70*	*90*					
Layer 3	*0*	*0*	*6*	*70*	*94*	*Dual Screen Well*	*0*	*1*		
Layer 4	*0*	*0*	*6*	*40*	*54*					
IRZ-7									*7615514.9*	*2103691.9*
Layer 1	*0*	*0*	*6*	*70*	*92*	*Dual Screen Well*	*0*	*1*		
Layer 2	*0*	*0*	*6*	*60*	*87*					
Layer 3	*0*	*0*	*6*	*70*	*93*	*Dual Screen Well*	*0*	*1*		
Layer 4	*0*	*0*	*6*	*40*	*52*					

TABLE 2.1-1
Final Remediation Well Design Parameter Summary: National Trails Highway IRZ Wells
Groundwater Remedy Operation and Maintenance Manual
Volume 1: Operation and Maintenance Plan
PG&E Topock Compressor Station, Needles, California

Well Location ID[a]	Final Injection/Extraction Rate per Model Layer (gpm)			Final Well Screen Length (feet)	Model Layer Saturated Thickness (feet)	Final Well Depiction	Final Well Count	Final Future Provisional Well Count	Final Well Coordinates[e]	
	Nominal	Minimum	Maximum						X	Y
IRZ-8									*7615501.9*	*2103615.0*
Layer 1	*0*	*0*	*6*	*60*	*84*	*Dual Screen Well*	*0*	*1*		
Layer 2	*0*	*0*	*6*	*60*	*81*					
Layer 3	*0*	*0*	*6*	*60*	*84*	*Dual Screen Well*	*0*	*1*		
Layer 4	*0*	*0*	*6*	*40*	*51*					
IRZ-9 (Extraction)[b]									7615566.3	2103560.8
Layer 1	40	20	80	130	81	Dual Screen Well	1	0		
Layer 2					75					
Layer 3	40	20	80	120	80					
Layer 4					50					
IRZ-10									*7615569.3*	*2103470.4*
Layer 1	*0*	*0*	*6*	*40*	*69*	*Dual Screen Well*	*0*	*1*		
Layer 2	*0*	*0*	*6*	*40*	*65*					
Layer 3	*0*	*0*	*6*	*40*	*68*	*Dual Screen Well*	*0*	*1*		
Layer 4	*0*	*0*	*6*	*40*	*49*					
IRZ-11									7615636.2	2103409.1
Layer 1	10	0	20	40	65	Dual Screen Well	1	0		
Layer 2	10	0	20	40	62					
Layer 3	10	0	20	40	66	Dual Screen Well	1	0		
Layer 4	10	0	20	40	51					
IRZ-12									*7615660.2*	*2103350.8*
Layer 1	*0*	*0*	*6*	*40*	*60*	*Dual Screen Well*	*0*	*1*		
Layer 2	*0*	*0*	*6*	*40*	*57*					
Layer 3	*0*	*0*	*6*	*40*	*59*	*Dual Screen Well*	*0*	*1*		
Layer 4	*0*	*0*	*6*	*40*	*51*					
IRZ-13									7615701.7	2103307.1
Layer 1	9	0	20	40	54	Dual Screen Well	1	0		
Layer 2	9	0	20	40	52					
Layer 3	9	0	20	40	59	Dual Screen Well	1	0		
Layer 4	9	0	20	40	53					
IRZ-14									*7615736.7*	*2103202.5*
Layer 1	*0*	*0*	*6*	*40*	*55*	*Dual Screen Well*	*0*	*1*		
Layer 2	*0*	*0*	*6*	*40*	*53*					
Layer 3	*0*	*0*	*6*	*40*	*50*	*Dual Screen Well*	*0*	*1*		
Layer 4	*0*	*0*	*6*	*30*	*44*					

TABLE 2.1-1
Final Remediation Well Design Parameter Summary: National Trails Highway IRZ Wells
Groundwater Remedy Operation and Maintenance Manual
Volume 1: Operation and Maintenance Plan
PG&E Topock Compressor Station, Needles, California

Well Location ID[a]	Final Injection/Extraction Rate per Model Layer (gpm)			Final Well Screen Length (feet)	Model Layer Saturated Thickness (feet)	Final Well Depiction	Final Well Count	Final Future Provisional Well Count	Final Well Coordinates[e]	
	Nominal	Minimum	Maximum						X	Y
IRZ-15									7615766.3	2103145.6
Layer 1	7	0	15	40	49	Dual Screen Well	1	0		
Layer 2	7	0	15	40	48					
Layer 3	7	0	15	40	48	Dual Screen Well	1	0		
Layer 4	7	0	15	30	43					
IRZ-16									7615794.5	2103038.2
Layer 1	6	0	15	40	51	Dual Screen Well	1	0		
Layer 2	6	0	15	40	49					
Layer 3	6	0	15	30	42	Dual Screen Well	1	0		
Layer 4	6	0	15	20	36					
IRZ-17									7615861.5	2102994.3
Layer 1	7	0	15	40	51	Dual Screen Well	1	0		
Layer 2	7	0	15	40	49					
Layer 3	7	0	15	30	39	Dual Screen Well	1	0		
Layer 4	7	0	15	20	33					
IRZ-18									*7615834.1*	*2102912.4*
Layer 1	*0*	*0*	*6*	*40*	*51*	*Dual Screen Well*	*0*	*1*		
Layer 2	*0*	*0*	*6*	*40*	*49*					
Layer 3	*0*	*0*	*6*	*20*	*30*	*Dual Screen Well*	*0*	*1*		
Layer 4	*0*	*0*	*6*	*15*	*23*					
IRZ-19									7615930.4	2102847.0
Layer 1	7	0	13	35	44	Dual Screen Well	1	0		
Layer 2	7	0	13	30	41					
Layer 3	7	0	13	20	28	Dual Screen Well	1	0		
Layer 4	7	0	13	15	24					
IRZ-20									7615807.6	2102769.2
Layer 1	4	0	13	35	47	Dual Screen Well	1	0		
Layer 2	4	0	13	30	42					
Layer 3	4	0	13	15	24	Dual Screen Well	1	0		
Layer 4	4	0	13	10	20					
IRZ-21									7615816.0	2102691.5
Layer 1	5	0	10	40	48	Dual Screen Well	1	0		
Layer 2	5	0	10	20	29					
Layer 3	5	0	10	10	18	Dual Screen Well	1	0		
Layer 4	5	0	10	15	26					

TABLE 2.1-1
Final Remediation Well Design Parameter Summary: National Trails Highway IRZ Wells
Groundwater Remedy Operation and Maintenance Manual
Volume 1: Operation and Maintenance Plan
PG&E Topock Compressor Station, Needles, California

Well Location ID[a]	Final Injection/Extraction Rate per Model Layer (gpm)			Final Well Screen Length (feet)	Model Layer Saturated Thickness (feet)	Final Well Depiction	Final Well Count	Final Future Provisional Well Count	Final Well Coordinates[e]	
	Nominal	Minimum	Maximum						X	Y
IRZ-22									*7615820.0*	*2102619.3*
Layer 1	*0*	*0*	*6*	*35*	*44*	*Dual Screen Well*	*0*	*1*		
Layer 2	*0*	*0*	*6*	*15*	*27*					
Layer 3	*0*	*0*	*6*	*10*	*19*	*Dual Screen Well*	*0*	*1*		
Layer 4	*0*	*0*	*6*	*15*	*27*					
IRZ-23 (Extraction)[b]									7615824.9	2102534.9
Layer 1					33					
Layer 2					28	Single Screen Well (Layers 2, 3, & 4)[d]				
Layer 3	100	40	160	70	24		1	0		
Layer 4					24					
IRZ-24									*7615822.2*	*2102468.3*
Layer 1	*0*	*0*	*13*	*40*	*31*					
Layer 2					*28*	*Dual Screen Well*	*0*	*1*		
Layer 3	*0*	*0*	*13*	*40*	*26*					
Layer 4					*25*					
IRZ-25									7615826.1	2102415.6
Layer 1	8	0	18	40	29					
Layer 2					27	Dual Screen Well	1	0		
Layer 3	8	0	18	40	26					
Layer 4					24					
IRZ-26									*7615818.5*	*2102313.7*
Layer 1	*0*	*0*	*13*	*40*	*28*					
Layer 2					*26*	*Dual Screen Well*	*0*	*1*		
Layer 3	*0*	*0*	*13*	*40*	*24*					
Layer 4					*24*					
IRZ-27									7615801.3	2102238.9
Layer 1	8	0	18	40	27					
Layer 2					25	Dual Screen Well	1	0		
Layer 3	8	0	18	40	23					
Layer 4					24					
IRZ-28									*7615797.9*	*2102180.2*
Layer 1	*0*	*0*	*13*	*40*	*26*					
Layer 2					*24*	*Dual Screen Well*	*0*	*1*		
Layer 3	*0*	*0*	*13*	*40*	*23*					
Layer 4					*22*					

TABLE 2.1-1
Final Remediation Well Design Parameter Summary: National Trails Highway IRZ Wells
Groundwater Remedy Operation and Maintenance Manual
Volume 1: Operation and Maintenance Plan
PG&E Topock Compressor Station, Needles, California

Well Location ID[a]	Final Injection/Extraction Rate per Model Layer (gpm)			Final Well Screen Length (feet)	Model Layer Saturated Thickness (feet)	Final Well Depiction	Final Well Count	Final Future Provisional Well Count	Final Well Coordinates[e]	
	Nominal	Minimum	Maximum						X	Y
IRZ-29									7615792.5	2102082.5
Layer 1	7	0	15	40	25	Dual Screen Well	1	0		
Layer 2					22					
Layer 3	7	0	15	35	21					
Layer 4					20					
IRZ-30									*7615780.6*	*2102010.8*
Layer 1	*0*	*0*	*13*	*40*	*26*	*Dual Screen Well*	*0*	*1*		
Layer 2					*20*					
Layer 3	*0*	*0*	*13*	*30*	*19*					
Layer 4					*18*					
IRZ-31									7615790.6	2101947.0
Layer 1	6	0	13	35	26	Dual Screen Well	1	0		
Layer 2					16					
Layer 3	6	0	13	25	16					
Layer 4					16					
IRZ-32									*7615812.9*	*2101863.3*
Layer 1	*0*	*0*	*13*	*30*	*21*	*Dual Screen Well*	*0*	*1*		
Layer 2					*14*					
Layer 3	*0*	*0*	*13*	*20*	*14*					
Layer 4					*13*					
IRZ-33									7615828.1	2101792.5
Layer 1	4	0	13	25	17	Dual Screen Well	1	0		
Layer 2					14					
Layer 3	4	0	13	20	14					
Layer 4					11					
IRZ-34									*7615853.9*	*2101667.0*
Layer 1	*0*	*0*	*26*	*35*	*13*	*Single Screen Well (All Layers)*	*0*	*1*		
Layer 2					*12*					
Layer 3					*12*					
Layer 4					*10*					
IRZ-35									7615903.6	2101664.7
Layer 1	6	0	15	30	10	Single Screen Well (All Layers)	1	0		
Layer 2					10					
Layer 3					10					
Layer 4					10					

TABLE 2.1-1
Final Remediation Well Design Parameter Summary: National Trails Highway IRZ Wells
Groundwater Remedy Operation and Maintenance Manual
Volume 1: Operation and Maintenance Plan
PG&E Topock Compressor Station, Needles, California

Well Location ID[a]	Final Injection/Extraction Rate per Model Layer (gpm)			Final Well Screen Length (feet)	Model Layer Saturated Thickness (feet)	Final Well Depiction	Final Well Count	Final Future Provisional Well Count	Final Well Coordinates[e]	
	Nominal	Minimum	Maximum						X	Y
IRZ-36									*7615948.8*	*2101605.7*
Layer 1	*0*	*0*	*25*	*25*	*7.4*	*Single Screen Well (All Layers)*	*0*	*1*		
Layer 2					*7.6*					
Layer 3					*7.6*					
Layer 4					*7.6*					
IRZ-37									7616003.9	2101554.6
Layer 1	4	0	10	20	5.7	Single Screen Well (All Layers)	1	0		
Layer 2					5.9					
Layer 3					5.9					
Layer 4					5.9					
IRZ-38									*7615965.2*	*2101400.4*
Layer 1	*0*	*0*	*25*	*15*	*5.0*	*Single Screen Well (All Layers)*	*0*	*1*		
Layer 2					*5.3*					
Layer 3					*5.3*					
Layer 4					*5.3*					
IRZ-39									7616112.5	2101375.6
Layer 1	4	0	5	10	2.8	Single Screen Well (All Layers)	1	0		
Layer 2					3.1					
Layer 3					3.1					
Layer 4					3.1					
IRZ-40 (Extraction)									*7616191.5*	*2101358.0*
Layer 1	*0*	*0*	*25*	*5*	*1.7*	*Single Screen Well (All Layers)*	*0*	*1*		
Layer 2					*2.0*					
Layer 3					*2.0*					
Layer 4					*2.0*					
Extraction Total:	**300**	**200[c]**	**400[c]**	**---**	**---**	**---**	**4**	**1**	**---**	**---**
Injection Total:	**300**	**200[c]**	**400[c]**	**---**	**---**	**---**	**24**	**30**	**---**	**---**

Notes:

Gray Italics denote future provisional wells.

gpm = gallons per minute

[a] Number of wells, total screen intervals, and screen depth placement at each well location ID are for purposes of the final (100%) design submittal and may be modified during installation. One well location ID may consist of multiple wells or screens, and one well screen interval may include more than one model layer. A maximum of two discrete screen intervals will be included per individual well. Dual screen wells will consist of one well with two discreet screen intervals separated by a packer. Some well location IDs include two dual screen wells which will be installed in separate boreholes.

[b] Wells are constructed with a dedicated pump for each well screen with the intervals separated using a pneumatic packer.

[c] Individual well minimum and maximum flow rates are provided herein. However, the total aggregate extraction/injection flow rates are limited to 200 gpm at minimum flows and 400 gpm at maximum flows.

[d] Extraction well design and operation will target extraction of groundwater from all four model layers without being screened across all layers.

[e] Coordinates listed are North American Datum 1983 State Plane Ground Coordinates, Zone 5 (NAD1983, State Plane, California, V, FIPS, 0405) rounded to the nearest 0.1 foot. Coordinates are for purposes of the final (100%) design submittal and may be modified during installation.

TABLE 2.1-2
Final Remediation Well Design Parameter Summary: Inner Recirculation Loop Wells
Groundwater Remedy Operation and Maintenance Manual
Volume 1: Operation and Maintenance Plan
PG&E Topock Compressor Station, Needles, California

Well Location ID[a]	Final Injection/Extraction Rate per Model Layer (gpm)			Final Well Screen Length (feet)	Model Layer Saturated Thickness (feet)	Final Well Depiction	Final Well Count	Final Future Provisional Well Count	Final Well Coordinates[h]	
	Nominal	Minimum	Maximum						Nominal	Minimum
River Bank Extraction Wells										
RB-1									7615763.6	2103918.0
Layer 1				160[g]	106					
Layer 2					99					
Layer 3	25	25	170	150	104	Single Screen Well (Layers 3 & 4)[g]	1	0		
Layer 4					56					
RB-2									7616012.0	2103398.0
Layer 1				70[g]	58					
Layer 2					56					
Layer 3	0	25	170	125	73	Single Screen Well (Layers 3 & 4)[g]	1	0		
Layer 4					60					
RB-3									7616210.6	2103172.8
Layer 1				70[g]	56					
Layer 2					58					
Layer 3	50	25	170	100	51	Single Screen Well (Layers 3 & 4)[g]	1	0		
Layer 4					50					
RB-4									7616337.5	2102908.5
Layer 1				70[g]	50					
Layer 2					55					
Layer 3	50	25	170	100	37	Single Screen Well (Layers 3 & 4)[g]	1	0		
Layer 4					50					
RB-5									7616397.6	2102423.9
Layer 1				15[g]	24					
Layer 2					24					
Layer 3	25	25	170	25	16	Single Screen Well (Layers 3 & 4)[g]	1	0		
Layer 4					16					
RB-6									*TBD*	*TBD*
Layer 1				*TBD*[g]	*TBD*					
Layer 2					*TBD*					
Layer 3	*0*	*25*	*170*	*TBD*	*TBD*	*Single Screen Well (Layers 3 & 4)*[g]	*0*	*1*		
Layer 4					*TBD*					
RB-7									*TBD*	*TBD*
Layer 1				*TBD*[g]	*TBD*					
Layer 2					*TBD*					
Layer 3	*0*	*25*	*170*	*TBD*	*TBD*	*Single Screen Well (Layers 3 & 4)*[g]	*0*	*1*		
Layer 4					*TBD*					

TABLE 2.1-2
Final Remediation Well Design Parameter Summary: Inner Recirculation Loop Wells
Groundwater Remedy Operation and Maintenance Manual
Volume 1: Operation and Maintenance Plan
PG&E Topock Compressor Station, Needles, California

Well Location ID[a]	Final Injection/Extraction Rate per Model Layer (gpm)			Final Well Screen Length (feet)	Model Layer Saturated Thickness (feet)	Final Well Depiction	Final Well Count	Final Future Provisional Well Count	Final Well Coordinates[h]	
	Nominal	Minimum	Maximum						Nominal	Minimum
RB-8									*TBD*	*TBD*
Layer 1	*0*	*25*	*170*	*TBD*[g]	*TBD*	*Single Screen Well (Layers 3 & 4)*[g]	*0*	*1*		
Layer 2					*TBD*					
Layer 3				*TBD*	*TBD*					
Layer 4					*TBD*					
RB-9									*TBD*	*TBD*
Layer 1	*0*	*25*	*170*	*TBD*[g]	*TBD*	*Single Screen Well (Layers 3 & 4)*[g]	*0*	*1*		
Layer 2					*TBD*					
Layer 3				*TBD*	*TBD*					
Layer 4					*TBD*					
Inner Recirculation Loop Injection Wells[b]										
IRL-1									7614392.1	2103402.9
Layer 1	0	35	200	80	62	Dual Screen Well	1	0		
Layer 2					71					
Layer 3	75			170	74					
Layer 4					64					
IRL-2									7614133.3	2103058.4
Layer 1	0	35	200	74	62	Dual Screen Well	1	0		
Layer 2					63					
Layer 3	75			160	65					
Layer 4					64					
IRL-3									7613976.1	2102799.3
Layer 1	100	35	200	140	55	Dual Screen Well	1	0		
Layer 2					55					
Layer 3					59					
Layer 4				71	61					
IRL-4									7613953.8	2102380.7
Layer 1	200	35	200	115	46	Dual Screen Well	1	0		
Layer 2					46					
Layer 3					49					
Layer 4				56	51					
IRL-5									*TBD*	*TBD*
Layer 1	*0*	*35*	*200*	*TBD*	*TBD*	*TBD*	*0*	*1*		
Layer 2					*TBD*					
Layer 3					*TBD*					
Layer 4					*TBD*					

TABLE 2.1-2
Final Remediation Well Design Parameter Summary: Inner Recirculation Loop Wells
Groundwater Remedy Operation and Maintenance Manual
Volume 1: Operation and Maintenance Plan
PG&E Topock Compressor Station, Needles, California

Well Location ID[a]	Final Injection/Extraction Rate per Model Layer (gpm)			Final Well Screen Length (feet)	Model Layer Saturated Thickness (feet)	Final Well Depiction	Final Well Count	Final Future Provisional Well Count	Final Well Coordinates[h]	
	Nominal	Minimum	Maximum						Nominal	Minimum
IRL-6[f]									*TBD*	*TBD*
Layer 1	*0*	*35*	*200*	*TBD*	*TBD*	*TBD*	*0*	*1*		
Layer 2					*TBD*					
Layer 3					*TBD*					
Layer 4					*TBD*					
IRL-7[f]									*TBD*	*TBD*
Layer 1	*0*	*35*	*200*	*TBD*	*TBD*	*TBD*	*0*	*1*		
Layer 2					*TBD*					
Layer 3					*TBD*					
Layer 4					*TBD*					
Extraction Total:	**150**	**0**[c]	**500**[c]	---	---		**5**	**4**	---	---
Injection Total:	**450**[d]	**150**[d,e]	**900**[d,e]	---	---		**4**	**3**	---	---

Notes:

Gray Italics denote future provisional wells.

gpm = gallons per minute

[a] Number of wells, total screen intervals, and screen depth placement at each well location ID are for purposes of the final (100%) design submittal and may be modified during installation.

[b] The final nominal scenario assumes IRL-1 and IRL-2 will receive River Bank Extraction Well water (carbon-amended if Cr[VI] concentrations in the River Bank Extraction Wells exceed the clean-up goal); and IRL-3 and IRL-4 will receive fresh water. However, injection wells IRL-1 through IRL-4 (and future provisional wells IRL-5 through IRL-7, if constructed) will be constructed for flexibility to inject either/both fresh water or/and River Bank Extraction Well water during the lifetime of the remedy. IRL-1 and IRL-2 will be installed as dual-screen wells with the shallow screen (upper one-third of the saturated interval) separated from the deep screen (lower two-thirds of the saturated interval) with a pneumatic packer. The final nominal scenario assumes injection of River Bank Extraction Well water into the deep screen only at IRL-1 and IRL-2. IRL-3 and IRL-4 will be installed with both a shallow screen (upper two-thirds of the saturated interval) and deep screen (lower one-third of the saturated interval). IRL-3 and IRL-4 are designed to accommodate a pneumatic packer for potential future isolation of the shallow and deep screened intervals; however, under the final nominal scenario, only fresh water will be injected into IRL-3 and IRL-4 and the shallow and deep screens in these wells will not be isolated.

[c] Individual extraction well minimum and maximum flow rates are provided herein. However, the minimum and maximum aggregate flow rates from the entire extraction well network are estimated to be 0 gpm and 500 gpm, respectively.

[d] Injection flow rate includes 300 gpm of fresh water for the nominal flow, up to 150 gpm of fresh water for the minimum flow, and up to 900 gpm of fresh water for the maximum flow, as needed.

[e] Individual injection well minimum and maximum flow rates are provided herein. However, the minimum and maximum aggregate flow rates for the entire injection well network are estimated to be 150 gpm and 900 gpm, respectively.

[f] Future provisional well IRL-6 or IRL-7 may alternatively be considered as an extraction well with extracted groundwater re-injected into other Inner Recirculation Loop Injection Wells.

[g] River Bank Extraction Wells will be installed with a second shallow screen interval for potential future use which will be isolated from the deeper screen interval with a pneumatic packer.

[h] Coordinates listed are North American Datum 1983 State Plane Ground Coordinates, Zone 5 (NAD1983, State Plane, California, V, FIPS, 0405) rounded to the nearest 0.1 foot. Coordinates are for purposes of the final (100%) design submittal and may be modified during installation.

TABLE 2.1-3
Final Remediation Well Design Parameter Summary: TCS Recirculation Loop Wells
Groundwater Remedy Operation and Maintenance Manual
Volume 1: Operation and Maintenance Plan
PG&E Topock Compressor Station, Needles, California

Well Location ID[a]	Final Injection/Extraction Rate per Model Layer (gpm)			Final Well Screen Length (feet)	Model Layer Saturated Thickness (feet)	Final Well Depiction	Final Well Count	Final Future Provisional Well Count	Final Well Coordinates[e]	
	Nominal	Minimum	Maximum						Nominal	Minimum
Transwestern Bench Extraction Wells										
TWB-1									7615903.0	2100962.5
Layer 1					11					
Layer 2					11					
Layer 3					11	Single Screen Well (Layers 3 & 4)[d]				
Layer 4	13	1	15	20	11		1	0		
TWB-2									7615993.9	2100972.0
Layer 1					8.3					
Layer 2					8.7					
Layer 3					8.7	Single Screen Well (Layers 3 & 4)[d]				
Layer 4	9	1	15	15	8.7		1	0		
TWB-3									*7615776.6*	*2101143.4*
Layer 1					*12*					
Layer 2					*13*					
Layer 3					*13*	*Single Screen Well (Layers 3 & 4)[d]*				
Layer 4	*0*	*1*	*15*	*25*	*13*		*0*	*1*		
TWB-4									*7616088.1*	*2100858.5*
Layer 1					*5.5*					
Layer 2					*5.9*					
Layer 3					*5.9*	*Single Screen Well (Layers 3 & 4)[d]*				
Layer 4	*0*	*1*	*15*	*20*	*5.9*		*0*	*1*		

TABLE 2.1-3
Final Remediation Well Design Parameter Summary: TCS Recirculation Loop Wells
Groundwater Remedy Operation and Maintenance Manual
Volume 1: Operation and Maintenance Plan
PG&E Topock Compressor Station, Needles, California

Well Location ID[a]	Final Injection/Extraction Rate per Model Layer (gpm)			Final Well Screen Length (feet)	Model Layer Saturated Thickness (feet)	Final Well Depiction	Final Well Count	Final Future Provisional Well Count	Final Well Coordinates[e]	
	Nominal	Minimum	Maximum						Nominal	Minimum
East Ravine Extraction Wells[b]										
ER-1									7616511.0	2101089.3
Layer 1	0.5			90	30	Single Screen Well or Open Bore	1	0		
Layer 2					20					
Layer 3					20					
Layer 4					20					
ER-2									7616666.3	2100998.8
Layer 1	0.5			90	30	Single Screen Well or Open Bore	1	0		
Layer 2					20					
Layer 3					20					
Layer 4					20					
		2 Total	4 Total							
ER-3									7616855.5	2100897.9
Layer 1	0.5			90	30	Single Screen Well or Open Bore	1	0		
Layer 2					20					
Layer 3					20					
Layer 4					20					
ER-4									7616934.6	2100761.3
Layer 1	0.5			90	30	Single Screen Well or Open Bore	1	0		
Layer 2					20					
Layer 3					20					
Layer 4					20					
ER-5									*7616995.3*	*2100677.9*
Layer 1	*0*	*0.5*	*1*	*90*	*30*	*Single Screen Well or Open Bore*	*0*	*1*		
Layer 2					*20*					
Layer 3					*20*					
Layer 4					*20*					
ER-6									7615840.0	2100512.0
Layer 1	3	1	5	90	29	Single Screen Well or Open Bore	1	0		
Layer 2					20					
Layer 3					20					
Layer 4					20					
ER-7									*TBD*	*TBD*
Layer 1	*0*	*0.5*	*1*	*TBD*	*TBD*	*Single Screen Well or Open Bore*	*0*	*1*		
Layer 2					*TBD*					
Layer 3					*TBD*					
Layer 4					*TBD*					

TABLE 2.1-3
Final Remediation Well Design Parameter Summary: TCS Recirculation Loop Wells
Groundwater Remedy Operation and Maintenance Manual
Volume 1: Operation and Maintenance Plan
PG&E Topock Compressor Station, Needles, California

Well Location ID[a]	Final Injection/Extraction Rate per Model Layer (gpm)			Final Well Screen Length (feet)	Model Layer Saturated Thickness (feet)	Final Well Depiction	Final Well Count	Final Future Provisional Well Count	Final Well Coordinates[e]	
	Nominal	Minimum	Maximum						Nominal	Minimum
ER-8									*TBD*	*TBD*
Layer 1	*0*	*0.5*	*1*	*TBD*	*TBD*	*Single Screen Well or Open Bore*	*0*	*1*		
Layer 2					*TBD*					
Layer 3					*TBD*					
Layer 4					*TBD*					
ER-9									*TBD*	*TBD*
Layer 1	*0*	*0.5*	*1*	*TBD*	*TBD*	*Single Screen Well or Open Bore*	*0*	*1*		
Layer 2					*TBD*					
Layer 3					*TBD*					
Layer 4					*TBD*					
ER-10									*TBD*	*TBD*
Layer 1	*0*	*0.5*	*1*	*TBD*	*TBD*	*Single Screen Well or Open Bore*	*0*	*1*		
Layer 2					*TBD*					
Layer 3					*TBD*					
Layer 4					*TBD*					
ER-11									*TBD*	*TBD*
Layer 1	*0*	*0.5*	*1*	*TBD*	*TBD*	*Single Screen Well or Open Bore*	*0*	*1*		
Layer 2					*TBD*					
Layer 3					*TBD*					
Layer 4					*TBD*					
TCS Injection Wells										
TCS-1									7615167.7	2101171.4
Layer 1	6.75	2	20	50	37	Dual Screen Well	1	0		
Layer 2					21					
Layer 3	6.75	2	20	40	21					
Layer 4					25					
TCS-2									7615149.1	2100899.7
Layer 1	6.75	2	20	40	27	Dual Screen Well	1	0		
Layer 2					26					
Layer 3	6.75	2	20	40	27					
Layer 4					17					
Extraction Total:	**27**	**10[c]**	**75[c]**	**---**	**---**	**---**	**7**	**8**	**---**	**---**
Injection Total:	**27**	**10[c]**	**75[c]**	**---**	**---**	**---**	**2**	**0**	**---**	**---**

Notes:
Gray Italics denote future provisional wells.
gpm = gallons per minute
[a] Number of wells, total screen intervals, and screen depth placement at each well location ID are for purposes of the final (100%) design submittal and may be modified during installation. One well location ID may consist of multiple screens, and one well screen interval may include more than one model layer. A maximum of two discrete screen intervals will be included per individual well. Dual screen wells will consist of one well with two discrete screen intervals separated by a packer.

TABLE 2.1-3
Final Remediation Well Design Parameter Summary: TCS Recirculation Loop Wells
Groundwater Remedy Operation and Maintenance Manual
Volume 1: Operation and Maintenance Plan
PG&E Topock Compressor Station, Needles, California

Well Location ID[a]	Final Injection/Extraction Rate per Model Layer (gpm)			Final Well Screen Length (feet)	Model Layer Saturated Thickness (feet)	Final Well Depiction	Final Well Count	Final Future Provisional Well Count	Final Well Coordinates[e]	
	Nominal	Minimum	Maximum						Nominal	Minimum

[b] East Ravine Extraction Wells are not expected to produce significant water, and automated pump cycling will be required.

[c] Individual well minimum and maximum flow rates are provided herein. However, the total aggregate minimum and maximum extraction/injection flow rates are limited to 10 gpm and 75 gpm, respectively.

[d] Extraction well design and operation will target extraction of groundwater from all four model layers without being screened across all layers.

[e] Coordinates listed are North American Datum 1983 State Plane Ground Coordinates, Zone 5 (NAD1983, State Plane, California, V, FIPS, 0405) rounded to the nearest 0.1 foot. Coordinates are for purposes of the final (100%) design submittal and may be modified during installation.

TABLE 2.2-1
Final Remediation Well Design Parameter Summary: Freshwater Injection Wells
Groundwater Remedy Operation and Maintenance Manual
Volume 1: Operation and Maintenance Plan
PG&E Topock Compressor Station, Needles, California

Well Location ID[a]	Final Injection/Extraction Rate per Model Layer (gpm)[b]			Final Well Screen Length (feet)	Model Layer Saturated Thickness (feet)	Final Well Depiction	Final Well Count	Final Future Provisional Well Count	Final Well Coordinates[c]	
	Nominal	Minimum	Maximum						Nominal	Minimum
FW-1									7613297.3	2102955.4
Layer 1	100	50	200	250	57	Single Screen Well (All Layers)	1			
Layer 2					57					
Layer 3					56					
Layer 4					78					
FW-2									7614682.7	2100511.5
Layer 1	50	25	100	60	15	Single Screen Well (All Layers)	1			
Layer 2					15					
Layer 3					15					
Layer 4					15					
Total:	**150**	**75**	**300**	**---**	**---**	**---**	**2**		**---**	**---**

Notes:

gpm = gallons per minute

[a] Number of wells, total screen intervals, and screen depth placement at each well location ID are for purposes of final (100%) design submittal and may be modified during installation. One well screen interval may include more than one model layer. A maximum of two discrete screen intervals will be included per individual well.

[b] Well testing will be conducted to assess specific injectivity per Section 4 of the O&M Plan.

[c] Coordinates listed are North American Datum 1983 State Plane Ground Coordinates, Zone 5 (NAD1983, State Plane, California, V, FIPS, 0405) rounded to the nearest 0.1 foot. Coordinates are for purposes of the final (100%) design submittal and may be modified during installation.

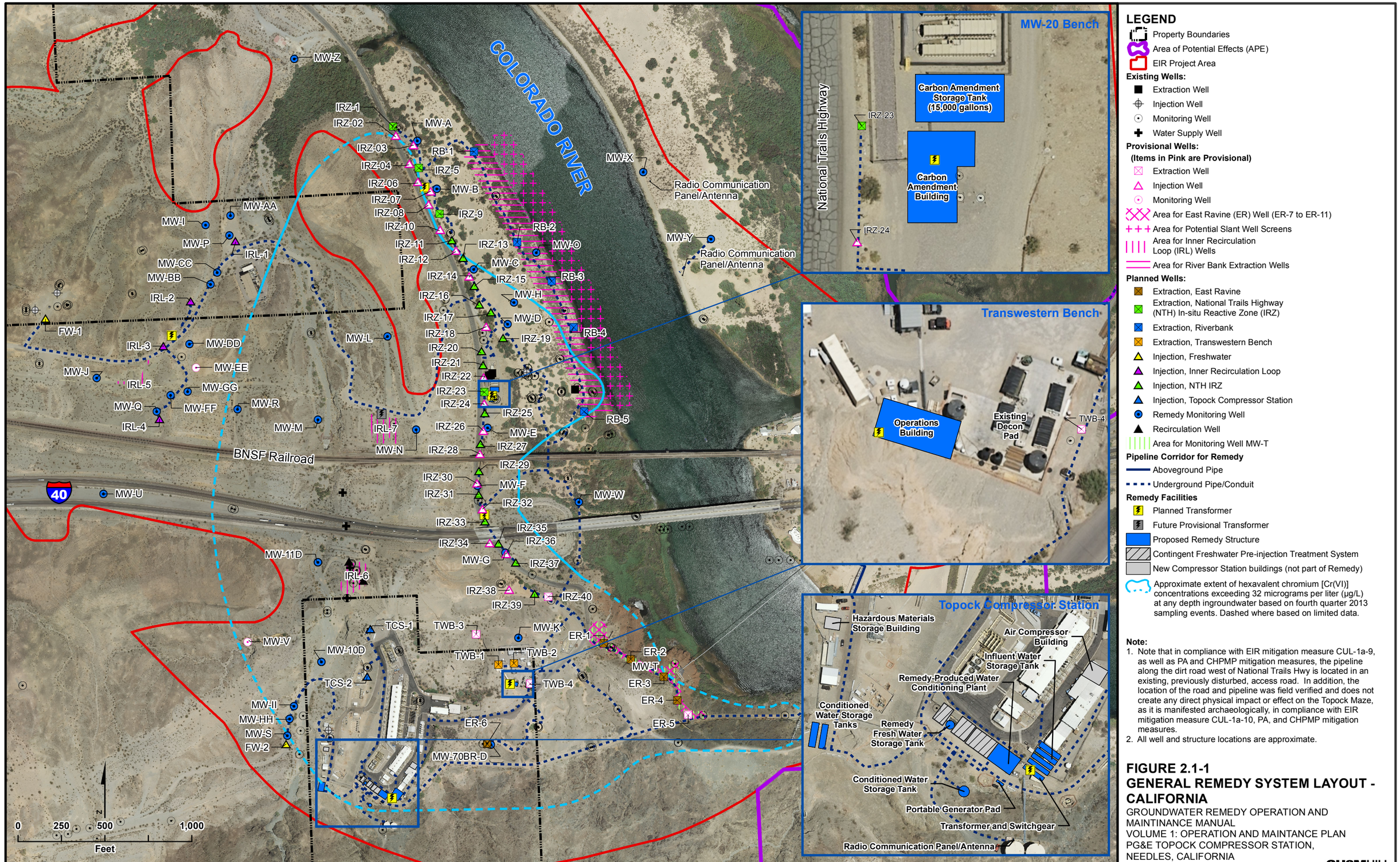

LEGEND

- Property Boundaries
- Area of Potential Effects (APE)
- EIR Project Area

Existing Wells:

- Extraction Well
- Injection Well
- Monitoring Well
- Water Supply Well

Provisional Wells:

(Items in Pink are Provisional)

- Extraction Well
- Injection Well
- Monitoring Well
- Area for East Ravine (ER) Well (ER-7 to ER-11)
- Area for Potential Slant Well Screens
- Area for Inner Recirculation Loop (IRL) Wells
- Area for River Bank Extraction Wells

Planned Wells:

- Extraction, East Ravine
- Extraction, National Trails Highway (NTH) In-situ Reactive Zone (IRZ)
- Extraction, Riverbank
- Extraction, Transwestern Bench
- Injection, Freshwater
- Injection, Inner Recirculation Loop
- Injection, NTH IRZ
- Injection, Topock Compressor Station
- Remedy Monitoring Well
- Recirculation Well
- Area for Monitoring Well MW-T

Pipeline Corridor for Remedy

- Aboveground Pipe
- Underground Pipe/Conduit

Remedy Facilities

- Planned Transformer
- Future Provisional Transformer
- Proposed Remedy Structure
- Contingent Freshwater Pre-injection Treatment System
- New Compressor Station buildings (not part of Remedy)
- Approximate extent of hexavalent chromium [Cr(VI)] concentrations exceeding 32 micrograms per liter (µg/L) at any depth ingroundwater based on fourth quarter 2013 sampling events. Dashed where based on limited data.

Note:

1. Note that in compliance with EIR mitigation measure CUL-1a-9, as well as PA and CHPMP mitigation measures, the pipeline along the dirt road west of National Trails Hwy is located in an existing, previously disturbed, access road. In addition, the location of the road and pipeline was field verified and does not create any direct physical impact or effect on the Topock Maze, as it is manifested archaeologically, in compliance with EIR mitigation measure CUL-1a-10, PA, and CHPMP mitigation measures.
2. All well and structure locations are approximate.

FIGURE 2.1-1
GENERAL REMEDY SYSTEM LAYOUT - CALIFORNIA

GROUNDWATER REMEDY OPERATION AND MAINTINANCE MANUAL
VOLUME 1: OPERATION AND MAINTANCE PLAN
PG&E TOPOCK COMPRESSOR STATION, NEEDLES, CALIFORNIA

CH2MHILL

Path: R:\PGEAlliance\Topock\MapFiles\2015\Vol1\Vol1_Fig211.mxd

Site B
County Highway 10
HNWR-1A
HNWR-1
MW-X
Radio Communication Panel/Antenna
MW-Y
Radio Communication Panel/Antenna
TOPOCK-2/3
Radio Communication Panel/Antenna
BNSF Railroad
40
Radio Communication Panel/Antenna
MW-T

VICINITY MAP

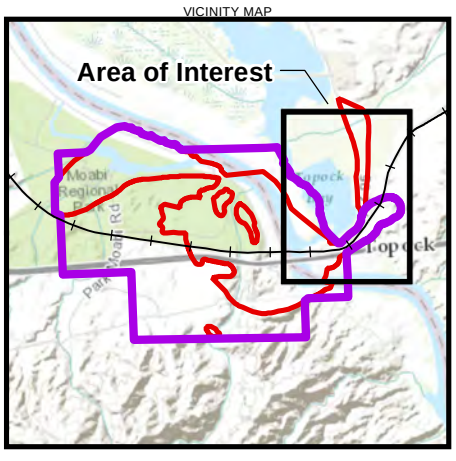

LEGEND

Existing Wells:
- Monitoring Well
- Water Supply Well

Planned Wells:
- Remedy Monitoring Well
- Area for Potential Slant Well Screens

Pipeline Corridor for Remedy
- Aboveground Pipe
- Underground Pipe/Conduit
- Future Provisional/ Contingent Fresh Water Pipe

Note:
All wells and remedy structure locations are approximate.

- Proposed Remedy Structure
- Area of Potential Effects (APE)
- EIR Project Area

N

0 195 390 780 Feet

Service Layer Credits: Sources: Esri, HERE, DeLorme, Intermap, increment P Corp., GEBCO, USGS, FAO, NPS, NRCAN, GeoBase, IGN, Kadaster NL, Ordnance Survey, Esri Japan, METI, Esri China (Hong Kong), swisstopo, MapmyIndia, © OpenStreetMap contributors, and the GIS User Community

FIGURE 2.2-1
GENERAL REMEDY SYSTEM LAYOUT - ARIZONA
GROUNDWATER REMEDY OPERATION AND MAINTENANCE MANUAL
VOLUME 1: OPERATION AND MAINTENANCE PLAN
PG&E TOPOCK COMPRESSOR STATION, NEEDLES, CALIFORNIA

CH2MHILL

Path: R:\PGEAlliance\Topock\MapFiles\2015\Vol1\Vol1_Fig221.mxd

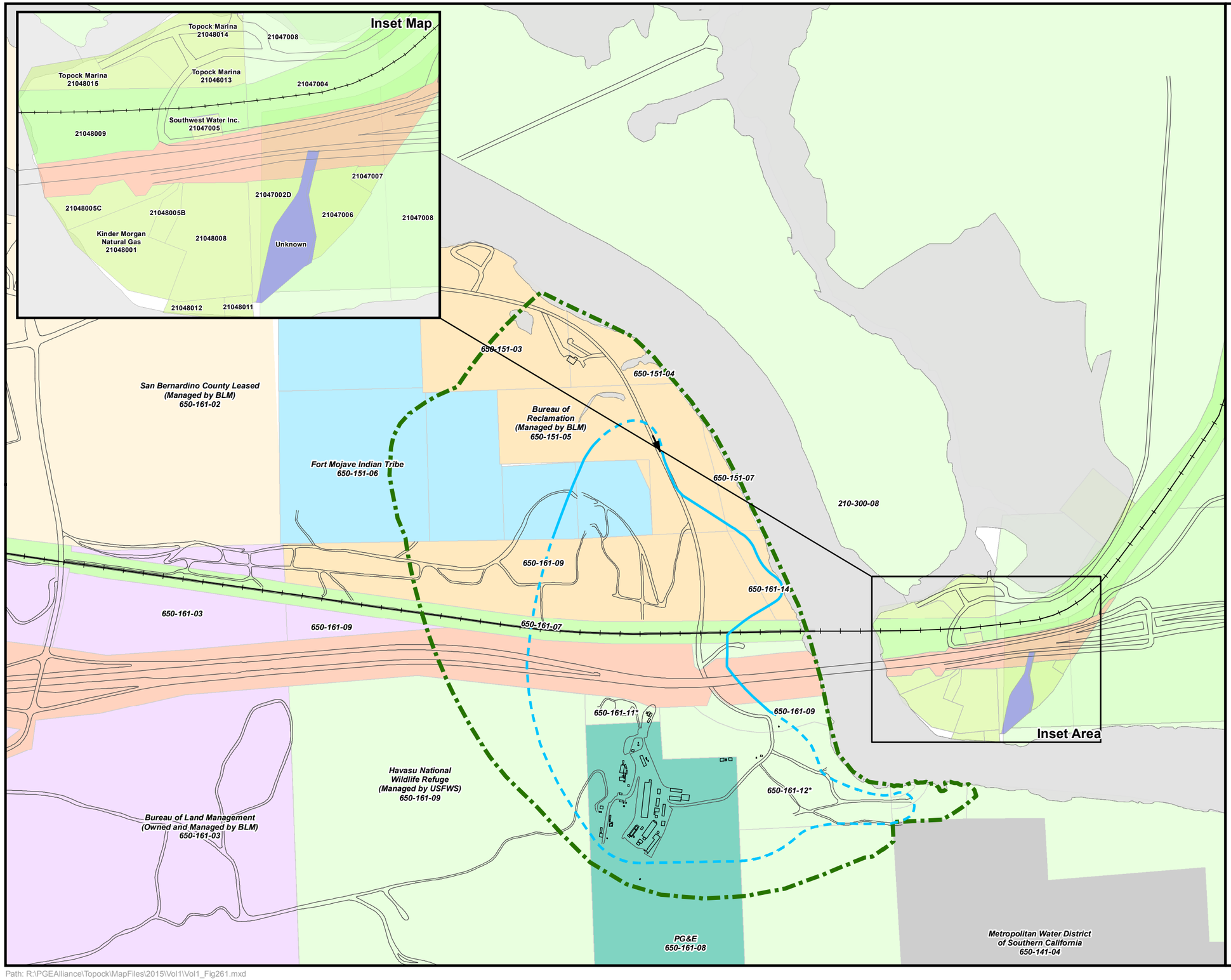

LEGEND

Property Owner

- BNSF Railroad
- Bureau of Land Management
- Bureau of Reclamation (managed by BLM)
- Caltrans Leased From Underlying Federal Owner
- Fort Mojave Indian Tribe Owner in Fee, With PG&E Easement and Access for Remediation
- Havasu National Wildlife Refuge
- Metropolitan Water District of Southern California
- PG&E
- Privately Owned
- San Bernardino County Leased (managed by BLM)

Approximate extent of hexavalent chromium [Cr(VI)] concentrations exceeding 32 micrograms per liter (µg/L) at any depth in groundwater based on fourth quarter 2013 sampling events. Dashed where based on limited data.

Approximate Area for Category 1 Institutional Control
The area over which to apply **Category 1** restrictions will include, at a minimum, the entire footprint of the chromium plume and any additional areas outside of the plume footprint where control of groundwater flow directions and gradients is necessary to contain and remediate the chromium plume, unless a Category 1 IC is determined to not be necessary by DTSC and DOI.

Note:
* = PG&E has a possessory interest on these parcels (650-161-11,650-161-12) for the operation of a compressor station and associated pipelines.

N

0 275 550 1,100 Feet

FIGURE 2.6-1
AREA FOR CATEGORY 1 INSTITUTIONAL CONTROLS
GROUNDWATER REMEDY OPERATION AND MAINTENANCE MANUAL
VOLUME 1: OPERATION AND MAINTENANCE PLAN
PG&E TOPOCK COMPRESSOR STATION, NEEDLES, CALIFORNIA

CH2MHILL

Path: R:\PGEAlliance\Topock\MapFiles\2015\Vol1\Vol1_Fig261.mxd

SECTION 3

Operation and Maintenance Procedures

This section describes the operating features of the in-situ remediation systems components, associated start-up and normal operating procedures, and the alarms that are part of the system operation. Lists of pertinent SOPs and equipment O&M manuals are provided below for the in-situ remediation systems (Section 3.1.6), the freshwater supply system (Section 3.2), the remedy-produced water conditioning system (Section 3.3), the power distribution system (Section 3.4), and the Remedy SCADA system (Section 3.5). Detailed SOPs and select equipment manuals are provided in Appendices B and C of this volume, respectively.

For the reader's convenience, select P&IDs have been included in Appendix A of this volume. All P&IDs can be found in Appendix D (Engineering Drawings) of the BOD Report.

Changes will occur during the decades-long operation of the remedy, which may necessitate the update of select portions of this O&M Plan. Material changes to the O&M procedures/SOPs will be reported in the quarterly progress reports. Operations staff will have the latest Standard Operating Procedures (SOPs) on file at the site. For administrative changes to the SOPs, such as changes in point of contact information, a log of changes will be maintained by PG&E. For efficiency, administrative changes will be bundled and/or opportunistically combined with O&M Plan updates to incorporate material changes. Current SOPs and change logs will be made available on a SharePoint site for reference by agencies, stakeholders, and Tribes. The need for and the timing/frequency of updating this O&M Plan will be discussed with the agencies as remedy start-up and operation progresses.

3.1 In-situ Remediation

3.1.1 Groundwater Extraction and Recirculation

3.1.1.1 NTH IRZ Extraction and Recirculation

Groundwater is extracted from the screened area(s) of NTH IRZ Extraction Wells IRZ-1,-5,-9 and -23 (IRZ-40 is designated as a provisional extraction well) using dedicated extraction well pumps. Extracted groundwater is conveyed through an appropriately sized drop pipe inside the well casing to a 2-inch conveyance line inside each well vault. The 2-inch line from each extraction well is tied into a single 6-inch groundwater forcemain, which is routed below-grade to the MW-20 Bench. Each extraction well is equipped with a check valve integral to the pump, and a pressure transducer (see Drawings I-04-01 and I-04-02 in Appendix A). Each well vault includes a globe valve, check valve, level switch, sample port and pressure indicator assembly, and flow meter (Drawings I-04-01 and I-04-02). Water is conveyed to the Carbon Amendment Building on the MW-20 Bench where carbon substrate is injected into the groundwater conveyance lines. From the MW-20 Bench, the groundwater forcemain will extend to the northern and southern ends of the NTH IRZ and will convey the carbon-amended extracted water to the NTH IRZ Injection Wells. At the injection well valve/meter vaults, the groundwater forcemain connects to smaller diameter injection well piping, is metered, throttled with valves, and injected into the aquifer.

Initially, the NTH IRZ Injection and Extraction Wells will be operated to target flow rates as specified in Table 2.1-1. However, actual flow rates may vary in the field. As system operations begin, well capacities and achievable flow rates will be evaluated. Injection and extraction flow rates will be balanced to optimize the rates across the system. Groundwater monitoring data, including water level data and analytical data, will be collected to evaluate the performance of the system and to make further adjustments to the injection and/or extraction flow rates as outlined in the Sampling and Monitoring Plan in Volume 2 of this O&M Manual. In addition, injection and extraction well performance will be evaluated over time to ensure well performance and guide the frequency of backwashing and well rehabilitation procedures, as outlined in Section 4. Additional adjustments to the balance of flow rates throughout the system may be needed as well performance changes over time.

3.1.1.2 Inner Recirculation Loop Extraction and Recirculation

Groundwater is extracted from the screened area of River Bank Extraction Wells RB-1 through RB-5 using a dedicated extraction well pump. Extracted groundwater is conveyed through an appropriately sized drop pipe

inside the well casing to a 2-inch conveyance line inside each well vault. The 2-inch line from each River Bank Extraction Well is tied into a single 6-inch groundwater forcemain, which is routed below-grade to the MW-20 Bench. Each extraction well is equipped with a check valve integral to the pump, and a pressure transducer (see Drawing I-05-01 in Appendix A). Each well vault includes a ball valve, check valve, level switch, sample port and pressure indicator assembly, and flow meter (Drawing I-05-01). Water is conveyed to the Carbon Amendment Building at the MW-20 Bench where carbon substrate is injected into the groundwater conveyance lines, when required. From the MW-20 Bench, the Inner Recirculation Loop forcemain will convey the water extracted by the River Bank Extraction Wells to the Inner Recirculation Loop Injection Wells. At the injection well valve/meter vaults, the Inner Recirculation Loop and/or freshwater forcemains connect to the smaller diameter injection well piping, allowing for either the extracted river bank water (with or without carbon amendment) or fresh water to be injected into the Inner Recirculation Loop Injection Wells. Metering equipment, check valves, and flow control valves in the injection well valve/meter vaults allow for control of each of the potential water sources to be injected. As discussed previously in Section 2.1.2.2, the nominal scenario includes injection of extracted river bank water into the deep screened interval at IRL-1 and IRL-2 (lower two-thirds of the saturated interval) and injection of fresh water into the entire screened interval at IRL-3 and IRL-4. Groundwater captured by the River Bank Extraction Wells will not be injected at IRL-3 or IRL-4 without pre-approval from the agencies. Similar to the NTH IRZ, flow rates will initially be targeted to match the design flow rates specified in Table 2.1-2. Actual flow rates will be adjusted based on achievable flow rates and adjusted as process control data are collected and evaluated according to the plan presented in Volume 2 of this O&M Manual, and as well performance is evaluated according to the plan presented in Section 4 below.

3.1.1.3 TCS Recirculation Loop Extraction and Recirculation

Groundwater is extracted from the screened area of Transwestern Bench Extraction Wells TWB-1 and TWB-2 and East Ravine Extraction Wells ER-1 through ER-4 and ER-6 using dedicated extraction well pumps. Extracted groundwater is conveyed through an appropriately sized drop pipe inside the well casing to a 2-inch conveyance line inside each well vault. The 2-inch line from each TCS Recirculation Loop extraction well is tied into a single 3-inch groundwater forcemain, which is routed below-grade to the MW-20 Bench. Each extraction well is equipped with a check valve after the pump and a pressure transducer (see Drawings I-03-01 and I-03-02 in Appendix A). Each well vault includes a globe valve, check valve, level switch, sample port and pressure indicator assembly, and flow meter (Drawings I-03-01 and I-03-02). Water is conveyed to the MW-20 Bench where carbon substrate can be injected into the groundwater conveyance lines.

Groundwater leaving the MW-20 Bench will be routed through a forcemain to the TCS Injection Wells (TCS-01 and -02) located in the TCS area. The TCS Injection Well valve/meter vaults will include metering and throttling equipment consistent with the other injection well valve/meter vaults described above. Similar to the NTH IRZ, flow rates will initially be targeted to match the design flow rates specified in Table 2.1-3. Actual flow rates will be adjusted based on achievable flow rates and adjusted as process control data are collected and evaluated according to the plan presented in Volume 2 of this O&M Manual, and as well performance is evaluated according to the plan presented in Section 4.

3.1.1.4 Recirculation Start-up Procedures

The circulation of groundwater may be interrupted during scheduled maintenance periods due to an alarm designated for system shutdown, or during non-operational periods designed into the remedial strategy. When the recirculation of groundwater is restarted after any of these events, a series of actions will be undertaken. The Remedy SCADA system will be consulted to verify that all critical alarms have been cleared and reset prior to any groundwater extraction pumps and actuated valves opening. Extraction pumps and actuated valves must also be in the ”auto” control mode, allowing for the PLC-contained programming logic to shut down each piece of equipment in the event of another alarm notification. If all conditions have been met, the system will start operation by opening actuated valves controlling flow into the injection wells and energizing the groundwater extraction pumps. Flow rates and pressures will be monitored across the system to verify successful start-up and flow balancing at all operating wells.

3.1.2 Carbon Substrate Storage and Deliveries

The carbon substrate amendment facilities include a Carbon Amendment Building located at the MW-20 Bench. This location has a main tank for carbon substrate storage, carbon substrate pumps, and actuated valves to control the distribution of carbon substrate to the groundwater recirculation system.

At the MW-20 Bench carbon substrate is stored in the Carbon Substrate Tank T-IRZ00-0601 (see Drawing I-06-02 in Appendix A). The carbon substrate is received via tanker truck at the facility, and the Carbon Substrate Tank is filled via a fill port fitted with a lockable valve. Operations personnel will be present during all chemical transfer activities and will verify the liquid level (using LE/LT-IRZ00-0652) in the tank prior to beginning the filling operation. Each Carbon Substrate Tank is equipped with integral secondary containment, including leak detection within the containment (LSH-IRZ00-0651), integral thermal insulation per Steel Tank Institute (STI) Standard F941 for a thermally insulated aboveground storage tank (AST), overfill protection (V-IRZ00-0601C), pressure/vacuum relief valve to prevent pressure/vacuum fluctuations (V-IRZ00-0601D and V-IRZ00-0601E), temperature sensor, flame arrestor, and a liquid level measurement device (LE/LT-IRZ00-0652). A liquid level sensor (LE/LT-IRZ00-0652) monitors the carbon substrate level within Carbon Substrate Tank T-IRZ00-0601 and generates an alarm, as necessary, at the Remedy SCADA system based on the measured level within the tank.

Instrumentation control set points and approaches for carbon substrate storage are summarized in Table 3.1-1. These set points may be adjusted based on system operational experience.

3.1.3 Carbon Substrate Amendment

The amendment sequencing event is automated by the Remedy SCADA system by turning the appropriate H-O-A switches to Auto. The target carbon load will be based on the extracted groundwater flow rate of each individual well and the target in-situ carbon concentration. As detailed in the Sampling and Monitoring Plan in Volume 2 of this O&M Manual, carbon substrate amendment concentrations, frequency, and duration will be adjusted based on analytical groundwater data and injection well performance data. The injected concentration is the main dosing control that will be adjusted to improve distribution. Frequency may also need to be adjusted to maintain injection capacity. The duration of the injection will be adjusted to control the total amount of ethanol being injected. Carbon substrate is pumped from the Carbon Substrate Tank T-IRZ00-0601 to the groundwater extraction header piping within the MW-20 Bench building using Carbon Substrate Pumps PMP-IRZ00-0640, PMP-IRZ00-0641, and PMP-IRZ00-0642 (see Drawing I-06-02 in Appendix A). Carbon substrate is amended into the groundwater recirculation conveyance lines within the MW-20 Bench building. The carbon-amended groundwater is then conveyed to the Inner Recirculation Loop, NTH IRZ, and TCS Injection Wells.

At the MW-20 Bench, a 1.5-inch diameter distribution line runs from the Carbon Substrate Tank (T-IRZ00-0601) to the pump manifold, where the line is split, reduced to 1-inch line, and connected to the suction side of each of the Carbon Substrate Pumps (PMP-IRZ00-0640, PMP-IRZ00-0641, and PMP-IRZ00-0642). The pumps discharge into a common 2-inch line that injects the substrate into one of four forcemains, including the Inner Recirculation Loop, North NTH IRZ, South NTH IRZ, and TCS Injection forcemains (see Drawings I-06-01 and I-06-02 in Appendix A).

The dosing of carbon substrate into the groundwater forcemains can be continuous or intermittent and is controlled by actuated valves (FCV-IRZ00-0615, FCV-IRZ00-0616, FCV-IRZ00-0617, or FCV-IRZ00-0618) operated by a timer. Carbon substrate is dosed into one or multiple forcemains at a time. An individual flow meter FM-IRZ00-0671, FM-IRZ00-0675, FM-IRZ00-0676, and FM-IRZ00-0681, located on the injection line prior to the individual forcemains, measures the total quantity of carbon substrate injected into each forcemain. Similarly, there are flow meters (FM-IRZ00-0672, FM-IRZ00-0673, FM-IRZ00-0674, and FM-IRZ00-0680) on each forcemain prior to the injection of carbon substrate, to measure total flow from the extraction wells. Each extraction well is equipped with a flow meter (FM-*0370A, FM-*0371A, FM-*0470A, FM-*0471A/B, FM-*0570A). Finally, each injection well is equipped with a flow meter (FM-*0372A/B, FM-*0472A, FM-*0473A/B, FM-*0474A/B, FM-*0475A/B, FM-*0571A, FM-*0572C) to measure the totalized flow of groundwater or carbon-amended groundwater into the injection well. The flow meters and totalizers in the injection wells are used to calculate the total quantity of groundwater and carbon-amended groundwater injected into the wells.

Between carbon substrate injection cycles, groundwater is continuously recirculated from the extraction wells to the groundwater recirculation lines within the MW-20 Bench building, and then to the injection wells via the forcemain lines. Check valves (V-*0303F, V-*0304J, V-*0403D, V-*0407H, V-*0407G, V-*0413D, V-*0413G, V-*0418C, V-*0418F) in each injection well prevent groundwater from backing up into the carbon substrate distribution lines. Each individual mechanical component is not shown or numbered on the drawings at each well; rather, a typical arrangement is shown. A well schedule is included as Drawing I-00-03 in Appendix A.

The following provides a brief description of the process control valves that are related to the carbon substrate distribution system. Instrumentation control approaches for the carbon substrate distribution system are also summarized in Table 3.1-1.

MW-20 Bench Valves

1. Manual Valves. The orientation (open or closed) of the following valves should be confirmed prior to operation as specified:
    - V-IRZ00-0603A and V-IRZ00-0603F should be open in line with Pump PMP-IRZ00-0640.
    - V-IRZ00-0603G and V-IRZ00-0603L should be open in line with Pump PMP-IRZ00-0641.
    - V-IRZ00-0603M and V-IRZ00-0603S should be open in line with Pump PMP-IRZ00-0642.
    - V-IRZ00-0603T should be open in manifold line to the injection points.
    - V-IRZ00-0603V, V-IRZ00-0603X, V-IRZ00-0603Z, and V-IRZ00-0604K should be open at the individual injection points.
    - V-IRZ00-0608A, V-IRZ00-0608B, and V-IRZ00-0608D on the River Bank Extraction Well Network Line should be open.
    - V-IRZ00-0609A on the IRZ-23 Extraction Well line should be open.
    - V-IRZ00-0609B on the Northern NTH IRZ Extraction Well Network Line should be open.
    - V-IRZ00-0609L and V-IRZ00-0610L on the TCS Extraction Well Network Line should be open.
    - V-IRZ00-0609C and V-IRZ00-0609H on the North NTH IRZ Injection Header line should be open.
    - V-IRZ00-0609D and V-IRZ00-0609K on the South NTH IRZ Injection Header line should be open.
    - During normal operation V-IRZ00-0604B, V-IRZ00-0604D, V-IRZ00-0604F, V-IRZ00-0604M, V-IRZ00-0610A, V-IRZ00-0610C, V-IRZ00-0610E, V-IRZ00-0610F, and V-IRZ00-0610G are to be closed. These valves are for the Clean-In-Place system or the Well Maintenance Reagent injection procedure.
    - Valve V-IRZ00-0610G should remain closed at all times; this valve is to be used for future operation.
    - In the extraction well vaults, valves V-*301D, V-*302D, V-*0401D, V-*0402D, V-*0402H, and V-*501D should be open.
    - All sample port collection valves should remain closed until sample collection is required.
    - In the injection well vaults, the diaphragm valves (V-*0303B, V-*0304G, V-*0403B, V-*0407B, V-*0407E, V-*0413B, V-*0413E, V-*0418A, and V-*0418D) are to be manually adjusted to approximate the proper flow.
    - V-*0518 should be adjusted to the appropriate pressure regulating set point.
2. Actuated Flow Control Valves. The following valves are considered critical to the distribution of carbon substrate, and therefore proper actuation of these valves should be checked during startup.
    - FV-IRZ00-0611 located downstream of Carbon Substrate Tank T-IRZ00-0601 (carbon substrate forcemain) should be open during an injection sequence.

- FCV-IRZ00-0612 downstream of Carbon Substrate Pump PMP-IRZ00-0640 should be open when Pump PMP-IRZ00-0640 is set to "auto".
- FCV-IRZ00-0613 downstream of Carbon Substrate Pump PMP-IRZ00-0641 should be open when Pump PMP-IRZ00-0641 is set to "auto".
- FCV-IRZ00-0614 downstream of Carbon Substrate Pump PMP-IRZ00-0642 should be open when Pump PMP-IRZ00-0642 is set to "auto".
- FCV-IRZ00-0615 injection point of carbon substrate to Inner Recirculation Loop should be open when the Remedy SCADA is set to "Inject IRL".
- FCV-IRZ00-0616 injection point of carbon substrate to North NTH IRZ should be open when the Remedy SCADA is set to "Inject to North NTH IRZ".
- FCV-IRZ00-0617 injection point of carbon substrate to South NTH IRZ should be open, when the Remedy SCADA is set to "Inject to South NTH IRZ".
- FCV-IRZ00-0618 injection point of carbon substrate to TCS Recirculation Loop should be open, when the Remedy SCADA is set to "Inject to TCS Loop".
- FV-*0307, FV-*0308, FCV-*0404, FCV-*0408, FCV-*0409, FCV-*0414, FV-*0415, FV-*0416, FV-*0417, and *FCV-*0507 located in each injection well vault (in the TCS Recirculation Loop, NTH IRZ, and Inner Recirculation Loop) should be open when the Remedy SCADA is set to "auto".
- FCV-*0509 should be closed when the Remedy SCADA is set to auto.

The need to routinely implement the dosing of specific quantities of carbon substrate to wells on an individual basis is not anticipated. However, if certain injection wells require supplemental substrate injections, provisions have been included for dosing immediately at the well vaults using manual addition ports and portable tanks. An SOP for this operation is included in Appendix B (IRZ-SOP-11).

3.1.3.1 Carbon Amendment Procedure (MW-20 Bench)

Continuous or intermittent injection or dosing of the selected carbon substrate, carbon substrate target total organic carbon (TOC) concentrations, and injection frequency and duration will be adjusted based on groundwater analytical data and injection well performance, as summarized in Section 2.1.1.4 and presented in the Sampling and Monitoring Plan in Volume 2 of this O&M Manual. Anticipated injection rates are included in Tables 2.1-1 and 2.1-2.

Injections can be initiated by logging onto the Panel View (remotely or at the site) and clicking on or pressing the "Start Injection" button. Carbon amendment injections will not run or continue to run under the following system conditions:

1. If PMP-IRZ00-0640, PMP-IRZ00-0641, or PMP-IRZ00-0642; FCV-IRZ00-0611, FCV-IRZ00-0612, FCV-IRZ00-0613, or FCV-IRZ00-0614; and FCV-IRZ00-0615, FCV-IRZ00-0616, FCV-IRZ00-0617, or FCV-IRZ00-0618 are not in "Auto" position.[2]
2. If there is a communication alarm.

The carbon-amended water from the NTH IRZ can be injected into the North NTH IRZ Injection Header Leg or the South NTH IRZ Injection Header Leg, carbon-amended water from the River Bank Extraction Well Header can be injected into the Inner Recirculation Loop Header, and carbon-amended water from the TCS Extraction Well header can be injected into the TCS Injection Header (see Drawing I-06-01 in Appendix A). The determination regarding which header to inject into will be made by the project team based on performance monitoring and sampling results. The injection system can run with any combination of Carbon Amendment Pumps (PMP-IRZ00-

[2] Refer to the P&IDs in Appendix D of the BOD Report for details on the flow valves and controls.

0640, PMP-IRZ00-0641, or PMP-IRZ00-0642). The average anticipated carbon substrate injection flow rate is approximately 30 gph; however, the injection equipment is capable of injecting at up to 150 gph if needed. The Remedy SCADA system will be programmed with an injection program. The injection program can be field-adjusted via Remedy SCADA access to control the injection duration, flow rate, and frequency.

The following provides a brief description of the process control valves that are related to the injection system.

1. Manual Valves. The orientation (open or closed) of the following valves should be confirmed prior to operation as specified:
   - V-IRZ00-0603A, V-IRZ00-0603F, V-IRZ00-0603G, V-IRZ00-0603L, V-IRZ00-0603M, V-IRZ00-0603S, and V-IRZ00-0603T should be in the open position.
   - V-IRZ00-0603V should be in the open position when injecting into the Inner Recirculation Loop Header.
   - V-IRZ00-0603X should be in the open position when injecting into the North NTH IRZ Injection Header.
   - V-IRZ00-0603Z should be in the open position when injecting into the South NTH IRZ Injection Header.
   - V-IRZ00-0604K should be in the open position when injecting into the TCS Injection Header.
2. Actuated Flow Control Valves. The following valves are considered critical to the injection of carbon amendment, and therefore proper actuation of these valves should be checked during startup:
   - FCV-IRZ00-0612 should be in the “Auto” position during all injection activities and should actuate to the open position when PMP-IRZ00-0640 is activated.
   - FCV-IRZ00-0613 should be in the “Auto” position during all injection activities and should actuate to the open position when PMP-IRZ00-0641 is activated.
   - FCV-IRZ00-0614 should be in the “Auto” position during all injection activities and should actuate to the open position when PMP-IRZ00-0642 is activated.
   - FCV-IRZ00-0615 should be in the “Auto” position during all injection activities and should actuate to the open position when injecting into the Inner Recirculation Loop Header.
   - FCV-IRZ00-0616 should be in the “Auto” position during all injection activities and should actuate to the open position when injecting into the North NTH IRZ Injection Header
   - FCV-IRZ00-0617 should be in the “Auto” position during all injection activities and should actuate to the open position when injecting into the South NTH IRZ Injection Header
   - FCV-IRZ00-0618 should be in the “Auto” position during all injection activities and should actuate to the open position when injecting into the TCS Injection Header

3.1.3.2 NTH IRZ Carbon Substrate Amendment

In order to establish the IRZ, carbon-amended groundwater is injected through a drop pipe located in each of the NTH IRZ Injection Wells. A check valve is placed at the bottom of the injection well drop pipe to keep water from flowing back into the distribution lines. Carbon substrate flow rate (and total quantity) and carbon-amended groundwater injection flow rate are measured with magnetic flow meters located at the carbon substrate injection header and in each injection well vault, respectively, and will be controlled by automated flow control valves. The mechanical and process controls for NTH IRZ injection operation are described below. Instrumentation control approaches for the NTH IRZ injection operation are also summarized in Table 3.1-1.

The following provides a brief description of the process control valves that are related to the North NTH IRZ Injection Header Leg (IRZ 1-22) and the South NTH IRZ Injection Header Leg (IRZ 24-40).

1. Manual Valves. The orientation (open or closed) of the following valves should be confirmed prior to operation as specified:
    - V-IRZ00-0609A, V-IRZ00-0609B, V-IRZ00-0609C, V-IRZ00-0609D, V-IRZ00-0609H, and V-IRZ00-0609K should be in the open position.
    - V-IRZ00-0610F should be in the closed position for flow to the North NTH IRZ.
    - V-IRZ00-0610G should be in the closed position for flow to the South NTH IRZ.
    - If directing amendment water to the South NTH IRZ, only, V-IRZ00-0609C should be in the closed position.
    - The sample port valve should be in the closed position.

Three separate injection well location designs exist for the NTH IRZ injection system: a single-screen injection well design, a dual-screen well design, and a dual-screen injection well clusters design. P&IDs for the NTH IRZ Injection Wells are shown on Drawings I-04-03 through I-04-06 in Appendix A. The operator will select the target injection well(s) on the Remedy SCADA and select the appropriate "H-O-A" setting. The "Off" setting will close the actuated flow control valve at the well, the "Auto" setting will actuate the solenoid valve according to the programmed interval, and the "Hand" setting will leave the valve in the open position.

The following provides a brief description of the process control valves in the injection well vaults for the single-screen injection well design.

1. Manual Valves. The orientation (open or closed) of the following valves should be confirmed prior to operation as specified:
    - V-*0403A should be in the open position.
    - The sample port valve should be in the closed position.
    - V-*0403B should be manually adjusted to approximate the proper flow using the injection well flow meter.
2. Actuated Flow Control Valves. The following valve is considered critical to the injection of carbon-amended groundwater, and therefore proper actuation of this valve should be checked during startup:
    - FCV-*0404 should be in the "Auto" position during all injection activities. This valve is a flow control valve; therefore, the valve will actuate to ensure proper flow is achieved at the flow meter (FM-*0472A).

The following provides a brief description of the process control valves in the injection well vaults for the dual-screen injection well design. When a dual-screen injection well is selected for use, the Remedy SCADA will prompt the operator to select the appropriate injection screen(s) for use during the injection sequence. In this case, the operator will have the option of selecting injection screen 1, injection screen 2, or injection screens 1 and 2. The appropriate injection sequence will be selected based on chemistry results. Details on the types of chemical data that will be collected and how these will be used to determine injection operations are presented in Sections 2.2 and 4.2 of the Sampling and Monitoring Plan in Volume 2 of this O&M Manual.

1. Manual Valves. The orientation (open or closed) of the following valves should be confirmed prior to operation as specified:
    - V-*0407A should be in the open position.
    - The sample port valve should be in the closed position.
    - V-*0407B and V-*0407E should be manually adjusted to approximate the proper flow.
2. Actuated Flow Control Valves. The following valves are considered critical to the injection of carbon-amended groundwater, and therefore proper actuation of these valves should be checked during startup:

- FCV-*0408 and FCV-*0409 should be in the "Auto" position during all injection activities. These valves are flow control valves; therefore, the valves will actuate to ensure proper flow is achieved at the flow meter (FM-*0473A and FM-*0473B).

The following provides a brief description of the process control valves in the injection well vaults for the dual-screen injection well cluster design. When a dual-screen injection well cluster is selected for use, the Remedy SCADA will prompt the operator to select the appropriate injection screen(s) for use during the injection sequence. In this case the operator will have the option of selecting injection screen 1, injection screen 2, injection screen 3, injection screen 4, or all injection screens.

1. Manual Valves. The orientation (open or closed) of the following valves should be confirmed prior to operation as specified:
   - V-*0413A should be in the open position.
   - The sample port valves should be in the closed position.
   - Depending on the injection screen, selected valves V-*0413B, V-*0413E, V-*0418A, and V-*0418D should be manually adjusted to approximate the proper flow.
2. Actuated Flow Control Valves. The following valves are considered critical to the injection of carbon-amended groundwater, and therefore proper actuation of these valves should be checked during startup:
   - FCV-*0414, FCV-*0415, FCV-*0416, and FCV-*0417 should be in the "Auto" position during all injection activities. These valves are flow control valves; therefore, the valves will actuate to ensure proper flow is achieved at the flow meter (FM-*0474A, FM-*0474B, FM-*0475A, and FM-*0475B).

3.1.3.3 Inner Recirculation Loop Carbon Substrate Amendment

Groundwater, carbon-amended groundwater, and/or fresh water can be injected through a drop pipe located in each of the Inner Recirculation Loop Injection Wells. The P&ID for the Inner Recirculation Loop Injection Wells is shown on Drawings I-05-02 and I-05-03 in Appendix A. A check valve is placed at the bottom of the injection well drop pipe to keep water from flowing back into the distribution lines. Carbon substrate flow rate (and total quantity), as applicable, and groundwater injection flow rate are measured with magnetic flow meters located at the carbon substrate injection header and in each injection well vault, respectively, and will be controlled by automated flow control valves (see also Table 3.1-1).

The following provides a brief description of the process control valves that are related to the carbon-amended Inner Recirculation Loop Injection Wells.

1. Manual Valves. The orientation (open or closed) of the following valves should be confirmed prior to operation as specified:
   - V-IRZ00-0608A, V-IRZ00-0608B and V-IRZ00-0608D should be in the open position.
   - The sample port valve should be in the closed position.

Groundwater or carbon-amended groundwater associated with the Inner Recirculation Loop system will be injected using the dual-screen injection wells. The operator will select the injection well(s) on the Remedy SCADA and the desired "H-O-A" setting. The "Off" setting will close the automated flow control valve at the well, the "Auto" setting will actuate the flow control valve according to the programmed interval, and the "Hand" setting will leave the flow control valve in the open position.

The following provides a brief description of the process control valves in the injection well vaults.

1. Manual Valves. The orientation (open or closed) of the following valves should be confirmed prior to operation as specified:
   - V-*0502A, V-*0510, and V-*0511 should be in the open position.

- The sample port valve should be in the closed position.
- The pressure regulating valve V-*0518 is to be manually adjusted to approximate the proper operation.

2. Actuated Flow Control Valves. The following valves are considered critical to the injection of groundwater or carbon-amended groundwater, and therefore proper actuation of these valves should be checked during startup:
   - FCV-*0507 will be adjusted via the Remedy SCADA to ensure proper flow is achieved at flow meter FM-*0571A.F.

3.1.3.4 TCS Recirculation Loop Carbon Substrate Amendment

In order to establish an IRZ, carbon-amended groundwater will be injected through a drop pipe located in each of the TCS Injection Wells. The P&ID for the TCS Injection Wells is shown on Drawing I-03-03 in Appendix A. A check valve is placed at the bottom of the injection well drop pipe to keep water from flowing back into the distribution lines. Carbon substrate flow rate (and total quantity) and carbon-amended groundwater injection flow rate are measured with magnetic flow meters located at the carbon substrate injection header and in each injection well vault, respectively, and will be controlled by automated flow control valves. The mechanical and process controls for TCS Recirculation Loop injection operation are described below. Instrumentation control approaches for the TCS Recirculation Loop injection operation are also summarized in Table 3.1-1.

1. Manual Valves. The orientation (open or closed) of the following valves should be confirmed prior to operation as specified:
   - V-IRZ00-0609L and V-IRZ00-0610L should be in the open position.
   - The sample port isolation valve should be in the closed position.

Extracted groundwater from the Transwestern Bench and East Ravine Extraction Well networks are combined at the MW-20 Bench. The blended water can be amended with carbon, supplemented with fresh water or extracted groundwater from the NTH IRZ as necessary, and then conveyed to the TCS Injection Wells. The injection sequence will allow for the flow of groundwater or carbon-amended groundwater into the wells. The TCS Injection Wells are single-screen wells. The operator will select the target injection well(s) on the Remedy SCADA and the appropriate “H-O-A” setting. The “Off” setting will close the solenoid valve at the well, the “Auto” setting will actuate the solenoid valve according to the programmed interval, and the “Hand” setting will leave the valve in the open position.

The following provides a brief description of the process control valves in the injection well vaults.

1. Manual Valves. The orientation (open or closed) of the following valves should be confirmed prior to operation as specified:
   - V-*0303A should be in the open position.
   - The sample port valves should be in the closed position.
   - V-*0303B and V-*0304G should be manually adjusted to approximate the proper flow.
2. Actuated Flow Control Valves. The following valves are considered critical to the injection of groundwater or carbon-amended groundwater, and therefore proper actuation of these valves should be checked during startup:
   - FV-*0307 and FV-*0308 should be in the “Auto” position during all injection activities. These valves are flow control valves; therefore, the valves will actuate to ensure proper flow is achieved at the flow meters (FM-*0372A and FM-*0372B).

3.1.4 Miscellaneous Controls

3.1.4.1 Well Packer

Pneumatic well packers are present in dual-screen injection and extraction wells. The purpose of the well packer is to provide a seal such that fluids will be injected/extracted within a specific interval of the aquifer. The well packers are initially inflated using compressed air to a pressure of at least 60 pounds per square inch (psi). Each well packer is equipped with a pressure indicator (PI-*0362C, PI-*0461F, PI-*0463D, PI-*0464E, PI-*0465E, PI-*0560D, PI-*0563) and a pressure switch (PSL-*0362D, PSL-*0461E, PSL-*0463G, PSL-*0464G, PSL-*0465G, PSL-*0560C, PSL-*0562). If the pressure of a well packer drops below the set point of a minimum of 40 psi (dependent on pressure setpoint), an alarm will be activated within the Remedy SCADA, which will require operator attention. An air line quick disconnect fitting is available within each well vault to allow for the connection of an air compressor to re-inflate the well packer.

3.1.4.2 Additional Process Controls

Several additional process controls will be utilized as part of the groundwater in-situ remediation system operation. Further information on control set points and approaches are included in Table 3.1-1. Set points may be adjusted in the future based on system operational experience. A brief description of process controls is also provided below:

- MW-20 Bench building level switches (LSH-IRZ00-0654 and LSH-IRZ00-0649) will initiate a locking high level alarm that will disable all of the pumps (carbon substrate, well maintenance reagent, and process water) located within the building, all of the extraction well pumps, and all of the backwash pumps. The alarm will also close the actuated valves that control the fresh water, carbon substrate, and well maintenance reagents.
- Carbon substrate tank interstitial space level switch (LSH-IRZ00-0651) will initiate a locking high level alarm. In addition, the carbon substrate delivery piping from the tanker trucks to the Carbon Substrate Tank and from the Carbon Substrate Tank to the building is double-walled. The interstitial spaces in the piping are also equipped with level switches (LSH-IRZ00-0650 and LSH-IRZ00-0653), which will initiate a locking alarm.
- All individual well vaults and well meter vaults for the remediation injection wells are equipped with leak detection level switches (LSH-*0352A, LSH-*0352B, LSH-*0452A, LSH-*0453A, LSH-*0453B, LSH-*0454A, LSH-*0454B, LSH-*0454C, LSH-*0551A, LSH-*0551B, LSH-*0552A, and LSH-*0552B), which will initiate a locking high level alarm that will disable the corresponding groundwater extraction pump/backwash pump and flow control valve (FV-*0307, FV-*0308, FCV-*0404, FCV-*0408, FCV-*0409, FCV-*0414, FCV-*0415, FCV-*0416, FCV-*0417, FCV-*0507, FCV-*0508, and FV-*0513) on each injection well line within the vault.
- The River Bank Extraction Wells and the NTH IRZ Extraction Wells each have a dedicated extraction well vault and, in some cases, a separate well meter vault. Each is equipped with a level switch (LSH-*0450A, LSH-*0451A, LSH-*0451B, and LSH-*0550A,), which will initiate a locking high alarm that will disable the corresponding extraction well pump (PMP-*0440, PMP-*0441, PMP-*0442, PMP-*0540).
- The single-screen Transwestern Bench and East Ravine Extraction Wells each have a single vault (combined extraction well and well meter vault). These vaults are equipped with a single level switch (LSH-*0350A and LSH-*0351A) which will initiate a locking high alarm that will disable the corresponding extraction well pump (PMP-*0340 and PMP-*0341).
- The carbon substrate tank is equipped with a level transmitter (LE/LT-IRZ00-0652). If the liquid level falls below the pre-set low-level setting, a nuisance alarm will be initiated to inform the system operators of the condition. Furthermore, if the liquid level rises above a pre-set high-level setting, a nuisance alarm will be initiated to inform the system operators of the condition.
- The well maintenance reagent day tank (T-IRZ00-0619) is equipped with a level transmitter (LE/LT-IRZ00-0659). If the liquid level falls below the pre-set low-level setting, a nuisance alarm will be initiated to inform the system operators of the condition and the reagent pump (PMP-IRZ00-0643) will be de-energized. Further,

if the liquid level rises above a pre-set high-level setting, a nuisance alarm will be initiated to inform the system operators of the condition and actuated valve FV-IRZ00-0630 will be set to the closed position.

- The pressure transducers (LT-*0360B, LT-*0361B, LT-*0460B, LT-*0461B, LT-*0461C, LT-*0560B) in the extraction wells transmit a 4 to 20 milliamp signal to their respective processors. The operating range for the pressure transducers is 0 to 100 psi gauge (psig). The 4 to 20 milliamp signals provide the processor with a pressure that is converted into a water level reading using a set depth and pressure range. If the water level decreases to a low level alarm set point, the extraction well pump is disabled until the groundwater level recovers to a set restart extraction level set point. These sensors are disabled via the Remedy SCADA.
- Each screened interval of an injection well is equipped with a pressure transducer. The pressure transducers (LT-*0362E, LT-*0362F, LT-*0462E, LT-*0463H, LT-*0463I, LT-*0464H, LT-*0464I, LT-*0465H, LT-*0465I, LT-*0561F, and LT-*0562F) in the injection wells transmit a 4 to 20 milliamp signal to their respective processors. The operating range for the pressure transducers is 0 to 100 psig. The 4 to 20 milliamp signals provide the processor with a pressure that is converted into a water level reading using a set depth and pressure range. The injection well water levels outputted by the processor are used to control the operation of the automated valves at the respective well locations. If the water level reaches a high level alarm set point, the automated valve closes until the injection well water level recovers to a set restart injection water level set point. If the water level in the injection well exceeds the high level alarm set point and triggers the high-high level alarm set point, then the system again attempts to close the automated valve, and an alarm notification is sent out to operator and management staff. High-high water level alarms usually indicate that an automated valve is not working properly.

3.1.5 Regularly Scheduled Equipment O&M

This section presents the routine O&M requirements for the individual equipment components.

3.1.5.1 Carbon Substrate Tank

The routine O&M requirements for the Carbon Substrate Tank (T-IRZ00-0601) are identified as follows:

Operating Requirements

1. Record tank level (LE/LT-IRZ00-0652). This data point is found on the HMI screen in the MW-20 Bench, as well as at the Operations Building.
2. The flow data will be used to calculate the volume of carbon substrate flowing to the injection headers, and all operational data will help to determine maintenance requirements for the tank and associated piping, valves, and flow monitoring equipment.

Maintenance Requirements

1. Visually inspect the tank exterior and associated piping for signs of damage, leaks, or excessive deformation of the tank walls.
2. Inspect filling apparatus and piping for leaks or damage.
3. Check level switch LSH-IRZ00-0651 to see if alarms have been initiated on the HMI data screen in the MW-20 Bench, as well as at the Operations Building.
4. Inspect the carbon substrate vent screen for fouling, and clean the screen or replace as necessary.

These maintenance inspection data will be recorded in the electronic data handheld instrument at the site. Routine maintenance inspections will be conducted on a weekly basis.

3.1.5.2 Carbon Substrate Pumps

The routine O&M requirements for the Carbon Substrate Pumps (PMP-IRZ00-0640, PMP-IRZ00-0641, and PMP-IRZ00-0642) are identified as follows:

Operating Requirements

1. Operate the pumps in accordance with the manufacturer's recommendations identified in the manufacturer-supplied O&M manuals.

Maintenance Requirements

1. Maintain the pumps in accordance with the manufacturer's recommendations identified in the manufacturer-supplied O&M manuals.
2. Visually inspect pumps for damage or leaks.

The routine maintenance inspections will be conducted on a weekly basis.

3.1.5.3 Well Maintenance Reagent Pump

The routine O&M requirements for the Well Maintenance Reagent Pump (PMP-IRZ00-0643) are identified as follows:

Operating Requirements

1. Operate the pump in accordance with the manufacturer's recommendations identified in the manufacturer-supplied O&M manuals.
2. Record flow meter totalizer (FM-IRZ00-0679) reading prior to and after every maintenance event. This data point is found on the HMI screen on the control panel in the MW-20 Bench, as well as at the Operations Building.
3. Record flow settings for every maintenance event. These settings will be set by the operator and can be changed on the HMI screen in the main control room.
4. Record average pump speed for every injection event. These data are found on the HMI screen in the MW-20 Bench, as well as at the Operations Building.
5. Record discharge pressure readings (PIT-IRZ00-0661) during every maintenance event. These data can be found on the pressure indicator transmitter after the pump.

The operation data will be recorded in the electronic data handheld instrument at the site. The flow meter data will be used to calculate the maintenance reagent concentration flowing to the injection wells; all operational data will help to determine maintenance requirements for the pumps and associated piping, valves, and flow meters.

Maintenance Requirements

1. Maintain the pump in accordance with the manufacturer's recommendations identified in the manufacturer-supplied O&M manuals.
2. Visually inspect pump for damage or leaks.

Routine maintenance inspections will be conducted on a weekly basis.

3.1.5.4 Submersible Well Pumps

The routine O&M requirements for the Submersible Well Pumps (PMP-*0340, PMP-*0341, PMP-*0342, PMP-*0343, PMP-*0440, PMP-*0441, PMP-*0442, PMP-*0443, PMP-*0444, PMP-*0445, PMP-*0446, PMP-*0447, PMP-*0448, PMP-*0449, PMP-*0540, PMP-*0541A, PMP-*0542A) are identified as follows:

Operating Requirements

1. Operate the pump in accordance with the manufacturer's recommendations identified in the manufacturer-supplied O&M manuals.
2. Record flow meter totalizer reading (FM-*0370A, FM-*0371A, FM-*0470A, FM-*0471A, FM-*0471B, FM-*0570A).

3. Calculate and record the average flow going into the injection wells.
4. Record the extraction well discharge pressure at the appropriate header (PIT-IRZ00-0662 and PIT-IRZ00-0663).
5. Record the pre-injection water level and post-injection water level for both the extraction and injection well(s).

3.1.6 Standard Operating Procedures and Equipment O&M Manuals

Detailed SOPs are provided in Appendix B. These include the following:

- IRZ-SOP-01: MW-20 Bench system startup
- IRZ-SOP-02: MW-20 Bench system shutdown/emergency shutdown
- IRZ-SOP-03: MW-20 Bench routine operation system inspection
- IRZ-SOP-04: Carbon amendment dosing procedures
- IRZ-SOP-05: MW-20 Bench carbon storage tank delivery/filling
- IRZ-SOP-06: MW-20 Bench sampling purge water transfer
- IRZ-SOP-07: Bench scale testing of clean-in-place reagents
- IRZ-SOP-08: Clean-in-place reagent delivery
- IRZ-SOP-09: Clean-in-place solution mixing and application
- IRZ-SOP-10: Discharge of clean-in-place water to the Remedy-produced Water Conditioning Plant
- IRZ-SOP-11: Use of portable tanks for individual well dosing
- IRZ-SOP-12: Off-site trucking of clean-in-place water from MW-20 Bench
- Remedy-SOP-03: Cleaning and maintenance of instrumentation and control equipment
- Remedy-SOP-04: Maintenance of aboveground pumps
- Remedy-SOP-05: Cleaning and maintenance of valves and flow control equipment
- Remedy-SOP-06: Automatic backwashing
- Remedy-SOP-07: Secondary containment inspection and maintenance at buildings
- PIPE-SOP-01: Conveyance system inspection and maintenance (to be provided at final [100%] design)
- PIPE-SOP-02: Well and meter vault inspection and maintenance

Select equipment manuals are provided in Appendix C. These include the following:

- Extraction and injection well backwash pumps
- Hose pumps

Selection of instrumentation and control equipment as well as valve and flow control devices is ongoing; therefore, their equipment manuals will be provided when available.

3.2 Freshwater Supply, Conveyance, Storage, and Injection

The freshwater supply conveyance and storage system extends from the freshwater supply well HNWR-1A to the remedy freshwater storage tank (TNK-FWST-0203) at the Compressor Station. Fresh water is supplied to the Freshwater Injection Wells (FW-1 and FW-2); Inner Recirculation Loop Injection Wells (IRL-1 through IRL-4); and multiple remedy facilities on the TW Bench and MW-20 Bench, and at the Remedy-produced Water Conditioning Plant inside TCS.

The following SOPs are provided in Appendix B of this O&M Plan:

- FWS-SOP-01: Startup and shutdown of freshwater supply conveyance and storage system
- FWS-SOP-02: Sand separator and drywell operation and maintenance
- FWS-SOP-03: Freshwater supply well site inspection
- PIPE-SOP-01: Conveyance system inspection and maintenance
- PIPE-SOP-02: Well and meter vault inspection and maintenance
- Remedy-SOP-03: Cleaning and maintenance of instrumentation and control equipment
- Remedy-SOP-05: Cleaning and maintenance of valves and flow control equipment

- Well-SOP-02: Cleaning and maintenance of well pumps (also see Section 4 for well maintenance)

The following equipment O&M manuals are provided in Appendix C:

- Freshwater supply and injection well pumps
- Sand separator

Selection of instrumentation and control equipment as well as control systems is ongoing; therefore, their equipment manuals will be provided when available.

3.2.1 Operating Procedures

Operating procedures outlined below include routine checks and normal operations. Instrumentation control set points and approaches are included in Table 3.1-1. These set points may be adjusted periodically based on system operational experience.

3.2.1.1 Routine Checks

Personnel will complete daily review of the operating conditions of process equipment within the freshwater supply, conveyance, and storage system via the Remedy SCADA. This check will be performed daily, during regular business hours, and may include pressure, flow, level, and operating status for rotating equipment. The freshwater supply well site(s) will be monitored remotely using the camera(s) and will be inspected annually or as required due to equipment faults (see SOPs PIPE-SOP-02: Well and meter vault inspection and maintenance and FWS-SOP-03: Freshwater supply well site inspection, in Appendix B). Visual inspections of the remedy freshwater storage tank will be performed weekly. Annual pipeline inspections will be made.

3.2.1.2 Normal Operations

During normal operations, PMP-HNWR1A-0110A in the HNWR-1A well will pump water to the Remedy Freshwater Storage Tank (TNK-FWST-0203) and the injection wells in the uplands (FW-1, and IRL-3 and IRL-4) (see P&IDs I-01-01, I-02-01, I-02-02, and I-05-03 in Appendix A). Fresh water stored in the Remedy Freshwater Storage Tank (TNK-FWST-0203) will flow by gravity to the Freshwater Injection Well FW-02 (P&IDs I-02-01 and I-02-02).

Process Conditions for Freshwater Supply:

- TNK-FWST-0203 level below high-level set point (LSH-FWST-0255)
- PMP-HNWR1A-0110A at freshwater supply well in “Auto” mode

Manual valves need to be in the following positions:

- Manual valves on pipeline leading to TNK-FWST-0203 and the injection wells in the uplands (V-HNWR1A-0110B, V-HNWR1A-0120A, V-HNWR1A-0120C, V-HNWR1A-0171A, and V-HNWR1A-0161A) - Open
- TNK-FWST-0203 inlet valve (V-FWST-0203B) – Open
- TNK-FWST-0203 future connection valve (V-FWST-0203A) – Closed

Process Conditions for Freshwater Injection:

- TNK-FWST-0203 level above the low-level set point (LSL-FWST-0255)
- A given injection well must have water level less than the high-level set point (LT-*0252, LT-*0562F)
- A given injection well vault must have water level lower than the high-level set point (LSH-*0251, LSH-*0552A/B)
- Backwash pump in a given injection well (PMP-*0201, PMP-*0542A) is not in “Run” mode
- Wellhead pressure is below the high-pressure set point in a given injection well (PI/PIT-*0262)
- Freshwater conveyance line pressure is below the high-pressure set point (PI/PIT-*0261)

Manual valves need to be in the following positions:

- TNK-FWST-0203 outlet valve (V-FWST-0203C) – Open
- Manual valves on freshwater conveyance line valves (V-FWST-0203E, V-*0201A, V-*0201G, V-*0270, V-*0532B, V-*0540, V-*0541) – Open
- Manual valve on pipeline leading to the contingent Freshwater Pre-injection Treatment System (FWPTS) (V-FWST-0203D) – Closed
- Manual valves on pressure indicators PIT-*0261 and PIT-*0262 (V-*0261A, V-*0261B, V-*0262A, V-*0262B), and PI-*0562A and PI-*0562D (V-*0562D and V-*0562F) – Open
- Manual valves on air release valve ARV-*0214 (V-*0214A) – Open

Automated valves in "Auto" mode:

- Open position (if the well is in injection mode) – FCV-*0212, FV-*0211, FV-*0513

3.3 Remedy-produced Water Management

The remedy-produced water management system starts at the remedy injection wells, continues through the conveyance system to the produced water conditioning system, and ends at the reuse/re-injection locations.

The following SOPs are provided in Appendix B of this O&M Plan:

- PIPE-SOP-01: Conveyance system inspection and maintenance
- Remedy-SOP-03: Cleaning and maintenance of instrumentation and control equipment
- Remedy-SOP-04: Maintenance of aboveground pumps
- Remedy-SOP-06: Automatic backwashing
- Remedy-SOP-07: Secondary containment inspection and maintenance at buildings
- Remedy-SOP-08: Inspection of frac tanks
- RTP-SOP-01: System "hot" startup and shutdown
- RTP-SOP-02: Batch conditioning process
- RTP-SOP-03: Continuous conditioning process
- RTP-SOP-04: Cartridge filter maintenance
- RTP-SOP-05: Secondary containment operation in the Remedy-produced Water Conditioning Plant
- RTP-SOP-06: Phase separator loading and removal
- RTP-SOP-07: Manual cleaning of frac tanks
- RTP-SOP-08: Off-site trucking of remedy-produced water
- RTP-SOP-09: Inspection of B-Side Conditioned Water Storage Tank
- RTP-SOP-10: Disposal of produced water in evaporation ponds via the TCS Wastewater Tank Discharge Connection
- RTP-SOP-11: Water transfer from conditioned water tank farm to tank at MW-20 Bench

Equipment O&M manuals provided in Appendix C include the following:

- Extraction well, centrifugal, metering, sump, air-operated diaphragm pumps
- Seal water system
- Cartridge filters
- Air compressor
- Flow control valves

Selection of instrumentation and control equipment as well as control systems is ongoing; therefore, their equipment manuals will be provided when available.

3.3.1 Operating Procedures

Operating procedures outlined below include routine checks, Influent Tank Farm fill cycle; Continuous Processing mode; Batch Processing mode; and Conditioned Water Storage Tank or Conditioned Water Storage Tank Farm Empty Cycle. The procedure outlines are for normal operational modes. Instrumentation control set points and approaches are included in Table 3.1-1. These set points may be periodically adjusted based on system operational experience.

3.3.1.1 Routine Checks

Personnel will review the operating conditions of all process equipment within the remedy-produced water conditioning system via the Remedy SCADA. This check will be performed daily during regular business hours, and may include pressure, flow, level, analytical instruments (pH, conductivity, turbidity), and operating status for rotating equipment. Visual inspections of the facilities, including physical conditions of process areas, will be performed during the daily walk-through of the system (see SOP Remedy-SOP-07: Secondary containment inspection and maintenance at buildings and Remedy-SOP-08: Inspection of frac tanks in Appendix B).

3.3.1.2 Influent Tank Farm Fill Cycle

This cycle occurs when backwash water from an injection well is being pumped to the Influent Tanks (TNK-RTP01-1101 through TNK-RTP01-1104). It will be terminated in an individual tank when the high water level is reached at which time the automated valve (FV-RTP01-1117, FV-RTP01-1127, FV-RTP01-1137, and FV-RTP01-1147) will close (see P&IDs I-11-01 through I-11-04 in Appendix A and Remedy-SOP-06: Automatic backwashing in Appendix B).

Process Conditions:

- A given tank must have water level less than the high-level set point (LSH-RTP01-1151, LSH-RTP01-1153, LSH-RTP01-1155, LSH-RTP01-1157).
- Air Compressor (CMP-RTP01-1201), Air Dryer/Filter (DRYER-RTP01-1202), and Receiver (DRM-RTP01-1203) are in Auto Mode (see P&ID I-12-05).

Automated valves in AUTO mode:

- Open position (if the tank is in the fill cycle) – FV-RTP01-1117, FV-RTP01-1127, FV-RTP01-1137, and FV-RTP01-1147.
- Closed position – FV-RTP01-1111, FV-RTP01-1112, FV-RTP01-1121, FV-RTP01-1122, FV-RTP011131, FV-RTP01-1132, FV-RTP01-1141, FV-RTP01-1142.

Manual valves need to be in the following positions:

- Manual valves upstream of automated valves FV-RTP01-1117, FV-RTP01-1127, FV-RTP01-1137, and FV-RTP01-1147 (V-RTP01-1101A, V-RTP01-1102A, V-RTP01-1103A, V-RTP01-1104A) – Open.
- Drain valves on Influent Tanks (V-RTP01-1101M, V-RTP01-1102M, V-RTP01-1103M, V-RTP011104M) – Closed.

3.3.1.3 Continuous Processing

This mode occurs when designated Influent Tanks are full and no pH adjustment is needed or no heavy solids loads are in the Influent Tanks. This mode applies to the A-side and B-side process streams. This mode will terminate when the low water level is reached in the tank, at which time the filter feed pumps in service will be shut down. This mode is also the same as the Empty Tank mode (see P&IDs I-11-01 through I-11-04, I-12-01, I-12-02, I-14-01, and I-14-02 in Appendix A and RTP-SOP-03: Continuous conditioning process in Appendix B).

Process Conditions:

- A given influent tank must have water level greater than the low-level set point (LSL-RTP01-1151, LSL-RTP01-1153, LSL-RTP01-1155, LSL-RTP01-1157).
- Filter Feed Pumps (PMP-RTP01-1210, PMP-RTP01-1220, PMP-RTP01-1230, PMP-RTP01-1240) in “Auto” mode.

The operator will designate the appropriate pair of pumps (A-side or B-side) to be in service.

- For the A-side, the Conditioned Water Storage Tank Farm (TNK-RTP01-1401, TNK-RTP01-1402) water levels are less than the high-level set point (LSH-RTP01-1451, LSH-RTP01-1453).
- For the B-side, the Conditioned Water Storage Tank (TNK-RTP01-1410) water level is less than the high-level set point (LSH-RTP01-1452).
- Air Compressor (CMP-RTP01-1201), Air Dryer/Filter (DRYER-RTP01-1202), and Receiver (DRM-RTP01-1203) are in "Auto" mode (see P&ID I-12-05).

Automated valves in "Auto" mode:

- Closed position (if the influent tank is in the Continuous Processing Mode) – FV-RTP01-1117, FV-RTP01-1127, FV-RTP01-1137, and FV-RTP01-1147 to prevent additional produced water from entering the tanks.
- Open position (if the A-side is in the Continuous Processing Mode) – FV-RTP01-1411, FV-RTP01-1412.

Automated valve positions for the filter feed pumps and flow control valves are a function of in service filter configuration and which process side is operating. Exhibit 3.3-1 lists the valve positions corresponding to the pump and process side in service.

EXHIBIT 3.3-1
Filter Feed Pump, Filter and Automated Valve Position—Continuous Processing
Groundwater Remedy Operation and Maintenance Manual
Volume 1: Operation and Maintenance Plan
PG&E Topock Compressor Station, Needles, California

Equipment In Service			Valve IDs & Position							
A-Side			XFV-*1211A	XFV-*1211C	XFV-*1212A	XFV-*1212C	XFV-*1221A	XFV-*1221C	XFV-*1222A	XFV-*1222C
PMP-*1210	FIL-*1211	FIL-*1212	Open	Open	Open	Open	Closed	Closed	Closed	Closed
PMP-*1210	FIL-*1211	FIL-*1222	Open	Open	Closed	Closed	Closed	Closed	Open	Open
PMP-*1220	FIL-*1221	FIL-*1222	Closed	Closed	Closed	Closed	Open	Open	Open	Open
PMP-*1220	FIL-*1221	FIL-*1212	Closed	Closed	Open	Open	Open	Open	Closed	Closed
B-Side			XFV-*1231A	XFV-*1231C	XFV-*1232A	XFV-*1232C	XFV-*1241A	XFV-*1241C	XFV-*1242A	XFV-*1242C
PMP-*1230	FIL-*1231	FIL-*1232	Open	Open	Open	Open	Closed	Closed	Closed	Closed
PMP-*1230	FIL-*1231	FIL-*1242	Open	Open	Closed	Closed	Closed	Closed	Open	Open
PMP-*1240	FIL-*1241	FIL-*1242	Closed	Closed	Closed	Closed	Open	Open	Open	Open
PMP-*1240	FIL-*1241	FIL-*1232	Closed	Closed	Open	Open	Open	Open	Closed	Closed

Note:
Where "*" is Location ID RTP01.

- Manual valves need to be in the following positions: Manual valves upstream of automated valves FV-RTP01-1111, FV-RTP01-1112, FV-RTP01-1121, FV-RTP01-1122, FV-RTP011131, FV-RTP01-1132, FV-RTP01-1141, FV-RTP011142 (V-RTP01-1101G, V-RTP01-1101I, V-RTP01-1102G, V-RTP01-1102I, V-RTP01-1103G, V-RTP01-1103I, V-RTP011104G, V-RTP011104I) – Open.
- For A-side – Manual valves upstream and downstream of filter feed pumps (V-RTP01-1210A, V-RTP01-1210C, V-RTP01-1220A, V-RTP01-1220C) – Open; manual valves upstream of TNK-RTP01-1401 and TNK-RTP01-1402 (V-RTP01-1401A, V-RTP01-1402A) – Open; manual valves for unconditioned water bypass to Cooling Tower Blowdown Line (V-RTP01-1210E, V-RTP01-1220E) – Closed; drain valves for TNK-RTP01-1401 and TNK-RTP01-1402 (V-RTP01-1401C, V-RTP01-1402C) – Closed.

- For B-side – Manual valve upstream of TNK-RTP01-1410 (V-RTP01-1410A) – Open; manual valves upstream and downstream of filter feed pumps (V-RTP01-1230A, V-RTP01-1230C, V-RTP01-1240A, V-RTP011240C) – Open.

3.3.1.4 Batch Processing

This mode occurs when designated Influent Tanks are full and either pH adjustment is needed or heavy solids loads are in the Influent Tanks. This mode is anticipated to apply to only the A-side process, so the B-side process equipment is not included. This mode has up to five elements including pH adjustment, coagulant addition, solids settling, sludge draw-off, and pH adjustment. All the elements except sludge draw-off will last a minimum of 30 minutes to enable complete tank mixing. The tank-emptying mode was described above (under Continuous Processing) (see P&IDs I-11-01 through I-11-04, I-12-01, I-12-03, I-12-04, I-12-05, and I-14-01 in Appendix A and RTP-SOP-02: Batch conditioning process in Appendix B).

Process Conditions:

- A given influent tank must have water level greater than the low-level set point (LSL-RTP011151, LSL-RTP011153, LSL-RTP011155, LSL-RTP01-1157).
- Any chemicals that are required like caustic, acid, or coagulants, must have sufficient chemical in the associated storage tank.
- Influent Tank Recirculation Pumps (PMP-RTP011101, PMP-RTP01-1102, PMP-RTP011103, PMP-RTP01-1104) are in “Auto” mode.
- Solids Pump (PMP-RTP01-1201) is in “Auto” mode.
- Air Compressor (CMP-RTP01-1201), Air Dryer/Filter (DRYER-RTP01-1202), and Receiver (DRM-RTP01-1203) are in “Auto” mode.
- Filter Feed Pumps (PMP-RTP01-1210, PMP-RTP011220) in “Auto” mode.
- The Conditioned Water Storage Tank Farm (TNK-RTP01-1401, TNK-RTP01-1402) water levels are less than the high-level set point (LSH-RTP01-1451, LSH-RTP01-1453).

Automated valves in “Auto” mode:

- Closed position (if the influent tank is in the Batch Processing mode) – FV-RTP01-1117, FV-RTP01-1127, FV-RTP01-1137, and FV-RTP01-1147 to prevent additional produced water from entering the tanks.
- Closed position (prevent discharge from designated Influent Storage Tanks) – FV-RTP01-1111, FV-RTP01-1112, FV-RTP01-1121, FV-RTP01-1122, FV-RTP01-1131, FV-RTP01-1132, FV-RTP01-1141, FV-RTP01-1142.
- Open position (if the tank is in the Batch Processing mode and a chemical is being injected) – FV-RTP01-1113, FV-RTP01-1114, FV- RTP01-1115, FV- RTP01-1123, FV- RTP01-1124, FV- RTP01-1125, FV-RTP01-1133, FV-RTP01-1134, FV-RTP01-1135, FV-RTP01-1143, FV-RTP01-1144, and FV-RTP01-1145.

Automated valve positions for the filter feed pumps and flow control valves are a function of in service filter configuration. Exhibit 3.3-2 lists the valve positions corresponding to the pump and process side in service.

EXHIBIT 3.3-2
Filter Feed Pump, Filter and Automated Valve Position—Batch Processing
Groundwater Remedy Operation and Maintenance Manual
Volume 1: Operation and Maintenance Plan
PG&E Topock Compressor Station, Needles, California

Equipment In Service			Valve IDs & Position							
A-Side			XFV-*1211A	XFV-*1211C	XFV-*1212A	XFV-*1212C	XFV-*1221A	XFV-*1221C	XFV-*1222A	XFV-*1222C
PMP-*1210	FIL-*1211	FIL-*1212	Open	Open	Open	Open	Closed	Closed	Closed	Closed
PMP-*1210	FIL-*1211	FIL-*1222	Open	Open	Closed	Closed	Closed	Closed	Open	Open
PMP-*1220	FIL-*1221	FIL-*1222	Closed	Closed	Closed	Closed	Open	Open	Open	Open
PMP-*1220	FIL-*1221	FIL-*1212	Closed	Closed	Open	Open	Open	Open	Closed	Closed

Notes: Where "*" is Location ID RTP01.

Manual valves need to be in the following positions:

- Manual valves upstream and downstream of the Influent Tank Recirculation Pumps (V-RTP011101B, V-RTP01-1101E, V-RTP01-1101F, V-RTP01-1101K, V-RTP01-1102B, V-RTP01-1102E, V-RTP01-1102F, V-RTP01-1102K, V-RTP01-1103B, V-RTP01-1103E, V-RTP01-1103F, V-RTP01-1103K, V-RTP01-1104B, V-RTP01-1104E, V-RTP01-1104F, V-RTP01-1104K – Open.
- Manual valves upstream and downstream of the Caustic Feed, Coagulant Feed, and Acid Feed Pumps (V-RTP01-1212B, V-RTP01-1211A, V-RTP01-1211F, V-RTP01-1220D, V-RTP01-1221A, V-RTP01-1221E, V-RTP01-1230E, V-RTP01-1231A, V-RTP01-1231F) – Open.
- Manual valves upstream and downstream of the Caustic Feed, Coagulant Feed, and Acid Feed Pumps (V-RTP01-1212C, V-RTP01-1212D, V-RTP01-1211D, V-RTP01-1211G, V-RTP01-1220F, V-RTP01-1221D, V-RTP01-1222D, V-RTP01-1230F, V-RTP01-1232A, V-RTP01-1231D, V-RTP01-1231G) – Closed.
- Manual valves upstream and downstream of the automated valves on the Caustic Feed, Coagulant Feed, and Acid Feed lines (V-RTP01-1113A, V-RTP01-1113B, V-RTP01-1114A, V-RTP01-1114B, V-RTP01-1115A, V-RTP01-1115B, V-RTP01-1123A, V-RTP01-1123B, V-RTP01-1124A, V-RTP01-1124B, V-RTP01-1125A, V-RTP01-1125B, V-RTP01-1133A, V-RTP01-1133B, V-RTP01-1134A, V-RTP01-1134B, V-RTP01-1135A, V-RTP01-1135B, V-RTP01-1143A, V-RTP011143B, V-RTP01-1144A, V-RTP01-1144B, V-RTP01-1145A, V-RTP01-1145B) – Open.

3.3.1.5 Empty Cycle in Conditioned Water Storage Tank

This cycle occurs when the Conditioned Water Storage Tank (TNK-RTP01-1410) is full and conditioned water needs to be conveyed to a re-use or re-injection location (see P&IDs I-06-04, I-12-05, and I-14-02 in Appendix A).

Process Conditions:

- Conditioned Water Storage Tank (TNK-RTP01-1410) water level is greater than the low-level set point (LSL-RTP01-1452).
- Conditioned Water Frac Tank (TNK-IRZ00-0620) water level is less than high level (LE/LT-IRZ00-0656).
- Air Compressor (CMP-RTP01-1201), Air Dryer/Filter (DRYER-RTP01-1202), and Receiver (DRM-RTP01-1203) are in "Auto" mode.

Automated valves in "Auto" mode:

- Open position – FV-RTP01-1414 (discharge line to TNK-IRZ00-0620 located at MW-20 Bench).
- Open position – FCV-IRZ00-0628M (valve upstream of TNK-IRZ00-0620 located at MW-20 Bench).

Manual valves need to be in the following positions:

- Manual valve downstream of Conditioned Water Storage Tank (V-RTP01-1410B) – Open.
- Manual valves upstream and downstream of TCS Truck Fill Pump (V-RTP01-1403A, V-RTP01-1403C) – Closed.

3.3.1.6 Empty Cycle in Conditioned Water Storage Tank Farm

This cycle occurs when the A-side Conditioned Water Storage Tanks (TNK-RTP01-1401, TNK-RTP01-1402) are full and conditioned water needs to be conveyed to re-use or re-injection location (see P&IDs I-06-02, I-12-05, and I-14-01 in Appendix A and RTP-SOP-11 in Appendix B).

Process Conditions:

- Conditioned Water Storage Tanks (TNK-RTP01-1401, TNK-RTP01-1402) water level is greater than the low-level set point (LSL-RTP01-1451, LSL-RTP01-1453).
- Conditioned Water Frac Tank (TNK-IRZ00-0620) water level is less than high level (LE/LT-IRZ00-0656).
- Conditioned Water Transfer Pumps (PMP-RTP01-1405/-1406) in "Auto" mode.
- Air Compressor (CMP-RTP01-1201), Air Dryer/Filter (DRYER-RTP01-1202), and Receiver (DRM-RTP01-1203) are in "Auto" mode (see P&ID I-12-05).

Automated valves in AUTO mode:

- Closed position – FV-RTP01-1415 (discharge line to Cooling Tower Blowdown Line).
- Open position – FV-RTP01-1416 (discharge line to TNK-IRZ00-0620 located at MW-20 Bench).
- Open position – FCV-IRZ00-0628M (valve upstream of TNK-IRZ00-0620 located at MW-20 Bench).

Manual valves need to be in the following positions:

- Manual valves upstream and downstream of Conditioned Water Transfer Pumps (V-RTP01-1401B, V-RTP01-1402B, V-RTP01-1405C, V-RTP01-1406B) – Open.

3.4 Power Supply and Distribution

The power supply system for the remedy will enter near the Remedy-produced Water Conditioning Plant and will supply power to a 12 kV medium voltage distribution system with six transformers to step the voltage down to 480 volts.

The SOPs provided in Appendix B include the following:

- PWR-SOP-01: Transformer inspection
- PWR-SOP-02: Solar photovoltaic system maintenance (see also Section 7.6, Maintenance of Small Solar Panels)
- PWR-SOP-03: Communication panel inspection and maintenance
- PWR-SOP-04: Remote well(s) panel inspection and maintenance

Select equipment O&M manuals provided in Appendix C include the following:

- Transformers

Selection of motor control centers is ongoing; therefore, their equipment manuals will be provided when available.

3.5 Remedy SCADA

The Remedy SCADA system is a series of computers networked together to monitor, control, and acquire data from the system instruments. The Remedy SCADA is located at the Operations Building at the Transwestern Bench. Numerous PLCs will be installed at wells and control nodes (co-located with the electrical transformers).

The SOPs provided in Appendix B include the following:

- SCADA-SOP-01: HMI/SCADA application backup and cleaning
- SCADA-SOP-02: SCADA historian backup and cleaning
- PWR-SOP-03: Communication panel inspection and maintenance
- PWR-SOP-04: Remote well(s) panel inspection and maintenance

Selection of Remedy SCADA equipment and networking devices is ongoing; therefore, their equipment manuals will be provided when available.

Note that to maintain compliance with carbon substrate storage and use permits, the Remedy SCADA will record the following information: Start Injection T-IRZ00-0601 Height, End Injection T-IRZ00-0601 Height, and carbon amendment temperature for every injection event. At the end of the 24-hour period, the injection volume and tank volume are automatically calculated. This information is sent to the carbon amendment use page on the Remedy SCADA. The Remedy SCADA system will also provide an HMI screen for selection of injection and backwashing sequences. Current valve indication (open or closed and hand/off/auto), pump indication (hand/off/auto), and various alarm indications are provided via the Remedy SCADA system. All operations and monitoring points can be controlled or viewed from the Remedy SCADA in the Operations Building at the Transwestern Bench or at HMI screens located at the carbon amendment facility at the MW-20 Bench and at the Remedy-produced Water Conditioning Plant, or at remote terminal locations as well as on mobile tablets.

3.6 Institutional Controls

Each IC enacted as part of the groundwater remedy will be operated and maintained in a manner consistent with any specific requirements detailed in the IC, including any periodic review schedule determined to be required and any process to ensure the effectiveness and successful implementation of the ICs.

3.7 Improvements at TCS Evaporation Ponds

Anticipated maintenance activities for the planned improvements at the TCS evaporation ponds are described below.

3.7.1 Electrical Power Generator

The RICE electrical power generator will utilize natural gas fuel to supply three-phase 120/208 VAC electrical power to pumps and three-phase loads at the TCS evaporation ponds. The system consists of a RICE, an alternator, a fuel system, control panel, and power electronics. Key maintenance activities will typically include the following:

- Clean radiator matrix monthly or after 100 hours of operation.
- Check oil levels, drive belt condition, electrical connections, and operation of emergency stop button weekly or after every 50 hours of operation.
- Perform a check of engine fluids, lines, hoses, cooling fan blades, exhaust components, and air intake daily or after every 8 hours of operation.

The TEGs will consist of three Global Thermoelectric model 8550 power sources, and will utilize natural gas fuel to generate 24 VDC power for supply to auxiliary equipment such as lighting, controls, sensors, security cameras, and valve actuators. TEGs are solid state devices that require minimal maintenance; however, a yearly service check is recommended to maintain reliable service. The annual service check will typically include the following activities:

- Perform power check and conduct maintenance as needed.
- Replace fuel filter.
- Drain pressure regulator sediment bowl.
- Check fuel orifice for clogging.
- Clean heat pipe fins, air intake screens, and cabinet interior.

- Check all bolts and fasteners for tightness.
- Restart TEG.

Additional information on maintenance procedures for the TEGs is provided in the Global Thermoelectric Operating Manual included in Appendix C.

3.7.2 Natural Gas Regulators

The natural gas supply fueling the electrical power generator consists of a 600-100 psig primary regulator and a 100-60 psig secondary regulator. Maintenance activities consist of the following:

- Annual check of regulators and monitoring of set points.
- Annual inspection of regulators, monitors, valves, and fittings for leaks and other damage.
- Annual check of differential pressure across filter.
- Annual manual operation of emergency valves.
- Annual exercising of valves to ensure functionality.
- Annual inspection of ¼ inch Welker Sulfur Removal Filter.
- Three year inspection of atmospheric corrosion damage.
- Five year internal inspection of regulator and monitor.

3.7.3 Water Recirculating Pumps

The 3-horsepower, 230V, three-phase vertical centrifugal recirculating pumps located at ponds 3 and 4 recirculate pond water. Maintenance activities consist of the following:

- Monthly visual inspection of hose connections and overall hose condition.
- Monthly visual inspection of power supply cable connections and overall cable condition.
- Monthly visual inspection of pump influent and effluent to ensure there are no obstructions present hindering flow.
- Monthly inspection to determine if pump is making unusual sounds (e.g., unusual vibrations, squealing, etc.).

3.7.3.1 Actuator Valves

Water is transferred to the individual ponds via a 3-inch HDPE header and piping configuration. The operation is controlled by electric actuated butterfly valves located at each individual pond. Visual inspection of power supply cable connections and overall cable condition will be conducted on a monthly basis.

3.7.3.2 Liquid Level Sensors and Control Units

Water levels in each pond are monitored utilizing independent Rosemount Ultrasonic Liquid Level Transmitters and control units. Maintenance activities consist of the following:

- Monthly visual inspection of power supply cable connections and overall cable condition.
- Monthly visual inspection of cover seal and wire glands.
- Monthly visual inspection of transmitter face to ensure cleanliness.

3.7.3.3 Cathodic Protection

To increase the life of the buried steel natural gas supply line, a cathodic protection system will be installed. The system may include an air-cooled rectifier, remote monitoring unit, or deep well sacrificial anode. Maintenance activities consist of the following:

- Bi-monthly inspection of rectifier
- Annual measurement of pipe-to-soil potential

3.8 Long-Term Remedy Support Area at Moabi Regional Park

Remedy systems at the Moabi Regional Park facilities requiring routine or non-routine O&M include the following:

- **Electrical power supply system** – Inspection and preventative maintenance of the generator and solar panels.
- **Potable water supply and distribution system** – Routine (i.e., weekly) water delivery to the potable water tank and inspection/maintenance of the booster pump.
- **Sewer system** – Routine (i.e., monthly) sewage removal and offsite hauling.
- **Decontamination/other wastewater management system** – Decontamination of construction vehicles and equipment, including drill rigs; management of rainwater collected in the secondary containment; inspection/maintenance of the sump pump; and offsite hauling of wastewater from the decontamination water storage tank. Water from this tank will be trucked to the appropriate location (e.g., the Remedy-produced Water Conditioning Plant or off site) for management.

Detailed SOPs are provided in Appendix B for the above-listed O&M activities. These include:

- CHQ-SOP-01: Offsite hauling of wastewater
- CHQ-SOP-02: Truck decontamination
- CHQ-SOP-03: Generator inspection
- CHQ-SOP-04: Potable water delivery
- CHQ-SOP-05: Offsite hauling of sewage

SOPs for maintenance of aboveground pumps—e.g., booster and sump pumps—and solar panels (Remedy-SOP-04 and PWR-SOP-02, respectively) are also available in Appendix B.

In addition, crane inspection, maintenance, operation, and testing will be performed in accordance with California Occupational Safety and Health Administration requirements (California Code of Regulations [CCR] Title 8, Sections 4990-5035).

TABLE 3.1-1
Control Set Points and Approaches
Groundwater Remedy Operation and Maintenance Manual
Volume 1: Operation and Maintenance Plan
PG&E Topock Compressor Station, Needles, California

System	Equipment [a]	Location Identification Number	Tag Number	Set Point [b]	Control Approach [c]
Freshwater Supply, Conveyance, and Storage					
Primary & Secondary Supply Wells and Conveyance to Storage	Level transducer and transmitter in Well HNWR-1A	HNWR1A	LT-*0151	NA	Measurement/Permissive/ Alarm
	Flowmeter and transmitter from Well HNWR-1A to Freshwater Tank	HNWR1A	FE/FIT-*0171	NA	Measurement/Permissive/ Alarm
	Pressure indicating transmitter from HNWR-1A pump discharge (PMP-*0110A) to Freshwater Tank	HNWR1A	PIT-*0161	NA	Measurement/Permissive/ Alarm
	Motor operated purge valve from sand separator (STR-*0110) to drywell vault	HNWR1A	FV-*0110	12 seconds every 15 minutes	Operator sets time and duration timer based on observation of solids in purge stream
	Level transducer and transmitter in Well Site B[d]	SITEB	LT-*0151	NA	Measurement/Permissive/ Alarm
	Flowmeter and transmitter from Well Site B to Freshwater Tank [d]	SITEB	FE/FIT-*0171	NA	Measurement/Permissive/ Alarm
	Pressure indicating transmitter from Site B pump discharge (PMP-*0110B) to Freshwater Tank[d]	SITEB	PIT-*0161	NA	Measurement/Permissive/ Alarm
	Motor operated purge valve from sand separator (STR-*0110) to drywell vault[d]	SITEB	FV-*0110	12 seconds every 15 minutes	Operator sets time and duration timer based on observation of solids in purge stream
Freshwater Storage	Low level switch for Freshwater Tank, TNK-*0203	FWST	LSL-*0255	2 feet	On-off control of freshwater supply pumps (PMP-*0110A/B) at HNWR-1A, HNWR-1[d], and Site B[d].
	High level switch for Freshwater Tank, TNK-*0203	FWST	LSH-*0255	13.5 feet	On-off control of freshwater supply pumps (PMP-*0110A/B) at HNWR-1A, HNWR-1[d], and Site B[d].
	Level transducer and transmitter for Freshwater Tank, TNK-*0203	FWST	LT-*0256	NA	Measurement/Permissive/ Alarm
Freshwater Injection Wells	Pressure indicating transmitter from Freshwater Pipeline to Injection Well, FW-01. Located in meter vault.	FW-01	PIT-*0261	NA	Measurement/Permissive/ Alarm
	Motor operated flow valve from Freshwater Pipeline to Injection Well, FW-01. Located in meter vault.	FW-01	FV-*0211	NA	Measurement/Permissive/ Alarm

TABLE 3.1-1
Control Set Points and Approaches
Groundwater Remedy Operation and Maintenance Manual
Volume 1: Operation and Maintenance Plan
PG&E Topock Compressor Station, Needles, California

System	Equipment [a]	Location Identification Number	Tag Number	Set Point [b]	Control Approach [c]
	Flowmeter and indicating transmitter from Freshwater Pipeline to Injection Well, FW-01. Located in meter vault.	FW-01	FE/FIT-*0271	NA	Measurement/Permissive/ Alarm
	Level transducer and transmitter in FW-01	FW-01	LT-*0252	NA	Measurement/Permissive/ Alarm
	Pressure indicating transmitter (and local indication) in FW-01 Well Vault	FW-01	PI/PIT-*0262	NA	Measurement/Permissive/ Alarm
	Level switch in FW-01 Well Vault	FW-01	LSH-*0251	NA	Measurement/Permissive/ Alarm
	Level switch in FW-01 Meter Vault	FW-01	LSH-*0253	NA	Measurement/Permissive/ Alarm
	Downhole Flow control valve in FW-01	FW-01	FCV-*0212	In Progress (dependent upon well testing)	Operator adjustable flow set point based on observation of well performance and groundwater movement
	Pressure indicating transmitter from Freshwater Pipeline to Injection Well, FW-02. Located in meter vault.	FW-02	PIT-*0261	NA	Measurement/Permissive/ Alarm
	Motor operated flow valve from Freshwater Pipeline to Injection Well, FW-02. Located in meter vault.	FW-02	FV-*0211	NA	Measurement/Permissive/ Alarm
	Flowmeter and indicating transmitter from Freshwater Pipeline to Injection Well, FW-02. Located in meter vault.	FW-02	FE/FIT-*0271	NA	Measurement/Permissive/ Alarm
	Level transducer and transmitter in FW-02	FW-02	LT-*0252	NA	Measurement/Permissive/ Alarm
	Pressure indicating transmitter (and local indication) in FW-02 Well Vault	FW-02	PI/PIT-*0262	NA	Measurement/Permissive/ Alarm
	Level switch in FW-02 Well Vault	FW-02	LSH-*0251	NA	Measurement/Permissive/ Alarm
	Level switch in FW-02 Meter Vault	FW-02	LSH-*0253	NA	Measurement/Permissive/ Alarm
	Downhole Flow control valve in FW-02	FW-02	FCV-*0212	In Progress (dependent upon well testing)	Operator adjustable flow set point based on observation of well performance and groundwater movement

TABLE 3.1-1
Control Set Points and Approaches
Groundwater Remedy Operation and Maintenance Manual
Volume 1: Operation and Maintenance Plan
PG&E Topock Compressor Station, Needles, California

System	Equipment [a]	Location Identification Number	Tag Number	Set Point [b]	Control Approach [c]
Remedy-produced Water Management					
Produced Water Generation – Automatic Backwash	Flowmeter and transmitter from Backwash Well Pump, PMP-*0201, to Influent Storage Tanks. In FW-02 meter vault.	FW-02	FE/FIT-*0272	NA	Measurement/Permissive/ Alarm
	Flowmeter and transmitter from Backwash Well Pump, PMP-*0201, to MW-20 Bench Backwash Frac Tank or bypass to Influent Storage Tanks. In FW-01 meter vault.	FW-01	FE/FIT-*0272	NA	Measurement/Permissive/ Alarm
	Water level transmitters in TCS Injection Wells, controlling well pumps, PMP-*0342 and PMP-*0343, to Influent Storage Tanks. In TCS Injection Well vaults.	TCS1 TCS2	LT-*0362E LT-*0362F	TBD	Measurement/Permissive/Alarm Low-level disables extraction well pump (PMP-*0342 and PMP-*0343) until groundwater level recovers to restart extraction level set point
	Water level transmitter in IRL Injection Wells, controlling well pumps, PMP-*0541A, to MW-20 Bench Backwash Frac Tank. In IRL Injection Well vaults.	IRL1 IRL2 IRL3 IRL4	LT-*0561F	TBD	Measurement/Permissive/Alarm Low-level disables extraction well pump (PMP-*0541A) until groundwater level recovers to restart extraction level set point
	Water level transmitters in NTH IRZ Injection Wells, controlling well pumps, PMP-*0443 to PMP-*0449, to MW-20 Bench Backwash Frac Tank. In NTH IRZ Injection Well vaults.	IRZ35 IRZ37 IRZ39 IRZ25 IRZ27 IRZ29 IRZ31 IRZ33 IRZ11A/B IRZ13A/B IRZ15A/B IRZ16A/B IRZ17A/B IRZ19A/B IRZ20A/B IRZ21A/B	LT-*0462E LT-*0463H/I LT-*0464H/I LT-*0465H/I	TBD	Measurement/Permissive/Alarm Low-level disables extraction well pump (PMP-*0443 to PMP-*0449) until groundwater level recovers to restart extraction level set point
Conveyance of Un-conditioned Remedy-produced Water	Flowmeter and transmitter from Combined Well Pumps to Influent Storage Tank 1	RTP01	FE/FIT-*1171	NA	Measurement/Permissive/ Alarm

TABLE 3.1-1
Control Set Points and Approaches
Groundwater Remedy Operation and Maintenance Manual
Volume 1: Operation and Maintenance Plan
PG&E Topock Compressor Station, Needles, California

System	Equipment [a]	Location Identification Number	Tag Number	Set Point [b]	Control Approach [c]
Conditioning	Low level switch for Influent Storage Tanks, TNK-*1101 through TNK-*1104	RTP01	LSL-*1151, 1153, 1155, 1157	NA	Measurement/Permissive/ Alarm
	High level switch for Influent Storage Tanks, TNK-*1101 through TNK-*1104	RTP01	LSH-*1151, 1153, 1155, 1157	NA	Measurement/Permissive/ Alarm
	Level element and indicating transmitter for Influent Storage Tanks	RTP01	LE/LIT-*1152, 1154, 1153, 1158	NA	Measurement/Permissive/ Alarm
	pH (A) and conductivity (B) elements and indicating transmitters for Influent Storage Tanks, TNK-*1101 through TNK-*1104	RTP01	AE/AIT-*1181A/B, 1183A/B, 1185A/B, 1187A/B	pH 6.5 to 8.5	Target pH range starts or stops acid or caustic feed pump. Operator adjustable based on well and system performance
	Turbidity elements and indicating transmitters for Influent Storage Tanks, TNK-*1101 through TNK-*1104	RTP01	AE/AIT-*1182, 1184, 1186, 1188	NA	Measurement/Permissive/ Alarm
	Turbidity element and indicating transmitter on common influent tank farm process outlet	RTP01	AE/AIT-*1189	NA	Measurement/Permissive/ Alarm
	Low level switch for Conditioned Water Tanks, TNK-*1401 and *1402	RTP01	LSL-*1451, 1453	NA	Measurement/Permissive/ Alarm
	High level switch for Conditioned Water Tanks, TNK-*1401 and *1402	RTP01	LSH-*1451, *1453	NA	Measurement/Permissive/ Alarm
	Level element and indicating transmitter for Conditioned Water Tanks, TNK-*1401 and *1402	RTP01	LE/LIT-*1452, *1454	NA	Measurement/Permissive/ Alarm
	High level switch for Liquid Phase Separator, LPS-*1211	RTP01	LSH-*1251	NA	Measurement/Permissive/ Alarm
	High level switch for Liquid Phase Separator, LPS-*1212	RTP01	LSH-*1252	NA	Measurement/Permissive/ Alarm
	High level switch for Liquid Phase Separator Pump Containment Area	RTP01	LSH-*1253	NA	Measurement/Permissive/ Alarm
	High level switch for Influent Storage Tank Containment Area	RTP01	LSH-*1159	NA	Measurement/Permissive/ Alarm
	High level switch for Conditioned Water Tank Farm Containment Area	RTP01	LSH-*1459	NA	Measurement/Permissive/ Alarm

TABLE 3.1-1
Control Set Points and Approaches
Groundwater Remedy Operation and Maintenance Manual
Volume 1: Operation and Maintenance Plan
PG&E Topock Compressor Station, Needles, California

System	Equipment [a]	Location Identification Number	Tag Number	Set Point [b]	Control Approach [c]
	Flowmeter and transmitter from A-side Filter Feed Pumps to TCS Wastewater Tank Discharge Connection	RTP01	FE/FIT-*1272	NA	Measurement/Permissive/ Alarm
	Flowmeter and transmitter from Cartridge Filters to A-side Conditioned Water Tanks, TNK-*1401 and *1402	RTP01	FE/FIT-*1271	NA	Measurement/Permissive/ Alarm
	Flowmeter and transmitter from Cartridge Filters to B-side Conditioned Water Tank, TNK-*1410	RTP01	FE/FIT-*1273	NA	Measurement/Permissive/ Alarm
	Flowmeter and transmitter from A-side Conditioned Water Tanks to MW-20 Bench Conditioned Water Frac Tank or TCS Wastewater Tank Discharge Connection	RTP01	FE/FIT-*1471	NA	Measurement/Permissive/ Alarm
	Low level switch for Conditioned Water Tank, TNK-*1410	RTP01	LSL-*1452	NA	Measurement/Permissive/ Alarm
	High level switch for Conditioned Water Tank, TNK-*1410	RTP01	LSH-*1452	NA	Measurement/Permissive/ Alarm
	Level element and indicating transmitter for Conditioned Water Tank, TNK-*1410	RTP01	LT-*1452	NA	Measurement/Permissive/ Alarm
	High level switch in TCS Truck Fill Station Secondary Containment	RTP01	LSH-*1455	NA	Measurement/Permissive/ Alarm
	Differential pressure transmitters around Cartridge Filters A-side	RTP01	DPDIT-*1261 thru 1264	12 psi	Changes valve configuration to divert flow to a clean filter. A higher set point of 30 psi may be used if filters are disposed of rather than cleaned on site.
	Differential pressure transmitters around Cartridge Filters B-side	RTP01	DPDIT-*1265 thru 1267, and 1269	12 psi	Changes valve configuration to divert flow to a clean filter. A higher set point of 30 psi may be used if filters are disposed of rather than cleaned on site.
Chemical storage	Level element and indicating transmitter for 25% caustic storage tank, TNK-*1212	RTP01	LE/LIT-*1251	NA	Measurement/Permissive/ Alarm
	Level element and indicating transmitter for coagulant storage tank, TNK-*1220	RTP01	LE/LIT-*1252	NA	Measurement/Permissive/ Alarm

TABLE 3.1-1
Control Set Points and Approaches
Groundwater Remedy Operation and Maintenance Manual
Volume 1: Operation and Maintenance Plan
PG&E Topock Compressor Station, Needles, California

System	Equipment [a]	Location Identification Number	Tag Number	Set Point [b]	Control Approach [c]
	Level element and indicating transmitter for 19% hydrochloric acid storage tank, TNK-*1230	RTP01	LE/LIT-*1253	NA	Measurement/Permissive/ Alarm
	High level switch for chemical storage area	RTP01	LSH-*1255	NA	Measurement/Permissive/ Alarm
NTH IRZ Groundwater Extraction, Carbon Amendment, and Injection					
Groundwater Extraction Wells	Extraction well level transducers and transmitters	IRZ23 IRZ1 IRZ5 IRZ9	LT-*0460B LT-*0461B LT-*0461C	NA	Measurement/Permissive/Alarm Low-level disables extraction well pump (PMP-*0440, PMP-*0441, PMP-*0442) until groundwater level recovers to restart extraction level set point
	Extraction well flowmeters and transmitters	IRZ23 IRZ1 IRZ5 RZ9I	FM-*0470A FM-*0471A FM-*0471B	NA	Measurement/Permissive/Alarm
	Extraction well vault level switch	IRZ1 IRZ5 IRZ9	LSH-*0451B	NA	Locking high-level alarm disables extraction well pumps (PMP-*0441 and PMP-*0442) if in alarm
	Extraction well (IRZ-23) vault level switch	IRZ23	LSH-*0450A	NA	Locking high-level alarm disables extraction well pump (PMP-*0440) if in alarm
	Extraction well meter vault level switch	IRZ1 IRZ5 IRZ9	LSH-*0451A	NA	Locking high-level alarm disables extraction well pumps (PMP-*0441 and PMP-*0442) if in alarm
	Extraction well (IRZ-23) vault pressure indicator transmitter	IRZ23	PIT-*0460A	NA	Measurement/Permissive/Alarm Disables extraction well pump PMP-*0440 if in alarm
	Extraction well meter vault pressure indicator transmitter	IRZ1 IRZ5 IRZ9	PIT-*0461A PIT-*0461D	NA	Measurement/Permissive/Alarm Disables extraction well pumps PMP-*0441/PMP-*0442 if in alarm
	Extraction well packer pressure switch	IRZ1 IRZ5 IRZ9	PSL-*0461E	NA	Measurement/Permissive/Alarm
MW-20 Bench Carbon Amendment Facilities	Carbon substrate delivery pipe secondary containment level switch	IRZ00	LSH-*0650	NA	Measurement/Permissive/Alarm
	Carbon substrate storage tank interstitial space level switch	IRZ00	LSH-*0651	NA	Measurement/Permissive/Alarm

TABLE 3.1-1
Control Set Points and Approaches
Groundwater Remedy Operation and Maintenance Manual
Volume 1: Operation and Maintenance Plan
PG&E Topock Compressor Station, Needles, California

System	Equipment [a]	Location Identification Number	Tag Number	Set Point [b]	Control Approach [c]
	Carbon substrate storage tank level sensor and transmitter	IRZ00	LE/LT-*0652	NA	Measurement/Permissive/Alarm Shuts down carbon substrate hose pumps (PMP-*064X) and closes modulating flow control valves (FV-*0612 to *0614) if in alarm (strobe light/audible alarm if in high level alarm)
	Carbon substrate storage tank high level switch	IRZ00	LSH-*0657	NA	Measurement/Permissive/Alarm Strobe light/audible alarm if in high level alarm
	Carbon substrate storage tank temperature sensor and transmitter	IRZ00	TE/TT-*0690	NA	Measurement/Permissive/Alarm
	Carbon substrate suction pipe secondary containment level switch	IRZ00	LSH-*0653	NA	Measurement/Permissive/Alarm Locking high-level alarm disables carbon substrate hose pumps (PMP-*064X) and closes modulating flow control valves (FCV-*0612 to *0614) if in alarm
	Carbon amendment room level switch	IRZ00	LSH-*0654	NA	Measurement/Permissive/Alarm Locking high alarm disables all extraction well/backwash pumps (PMP-*034X, *044X, and *054X), pumps within building (PMP-*064X), and flow control valves (FCV-*06XX) if in alarm
	Carbon substrate primary control valve	IRZ00	FV-*0611	NA	Measurement/Permissive/Alarm
	Carbon substrate pump VFDs	IRZ00	PMP-*0640 PMP-*0641 PMP-*0642	NA	Measurement/Permissive/Alarm
	Carbon substrate pump pressure switches	IRZ00	PSH-*0665 PSH-*0666 PSH-*0667	NA	Measurement/Permissive/Alarm Disables carbon substrate hose pumps (PMP-*064X) and flow control valves (FCV-*061X)
	Carbon substrate flow meters and transmitters	IRZ00	FM-*0671 FM-*0675 FFM-*0676 FM-*0681	NA	Measurement/Permissive/Alarm Disables carbon substrate hose pumps (PMP-*064X) if in alarm
	Carbon substrate modulating flow control valves	IRZ00	FCV-*0612 FCV-*0613 FCV-*0614	NA	Measurement/Permissive/Alarm
	Carbon substrate injection control valve	IRZ00	FCV-*0615 FCV-*0616 FCV-*0617 FCV-*0618	NA	Measurement/Permissive/Alarm

TABLE 3.1-1
Control Set Points and Approaches
Groundwater Remedy Operation and Maintenance Manual
Volume 1: Operation and Maintenance Plan
PG&E Topock Compressor Station, Needles, California

System	Equipment [a]	Location Identification Number	Tag Number	Set Point [b]	Control Approach [c]
	River Bank extraction well network header pressure sensor and transmitter	IRZ00	PIT-*0662	NA	Measurement/Permissive/Alarm Disables extraction pump PMP-*0540 if in alarm
	Combined IRZ-23 and North NTH IRZ extraction well network header pressure sensor and transmitter	IRZ00	PIT-*0663	NA	Measurement/Permissive/Alarm Disables extraction pumps PMP-*044X if in alarm
	River Bank extraction well network header flow meter and transmitter	IRZ00	FM-*0672	NA	Measurement/Permissive/Alarm
	North and South NTH IRZ injection header flow meter and transmitter	IRZ00	FM-*0673 FM-*0674	NA	Measurement/Permissive/Alarm D
	TCS extraction well network header flow meter and transmitter	IRZ00	FM-*0680	NA	Measurement/Permissive/Alarm D
	Truck offload sump level switch	IRZ00-	LSH-*0646	NA	Measurement/Permissive/Alarm
	Clean-in-place frac tank level sensor and transmitter	IRZ00	LE/LT-*0658	NA	Measurement/Permissive/Alarm Disables upstream actuated valve (FCV-*0628R) if in alarm
	Backwash frac tank level sensor and transmitter	IRZ00	LE/LT-*0657	NA	Measurement/Permissive/Alarm Disables backwash pumps (PMP-*044X and *054X) and upstream actuated valve (FCV-*0628Q) if in alarm
	Conditioned water frac tank level sensor and transmitter	IRZ00	LE/LT-*0656	NA	Measurement/Permissive/Alarm Disables upstream actuated valve (FCV-*0628M) if in alarm
	Clean-in-place return secondary containment level switch	IRZ00	LSH-*0647	NA	Measurement/Permissive/Alarm
	Well maintenance reagent delivery pipe secondary containment level switch	IRZ00	LSH-*0655	NA	Measurement/Permissive/Alarm
	Well maintenance reagent delivery control valve	IRZ00	FV-*0629	NA	Measurement/Permissive/Alarm
	Well maintenance reagent delivery flow meter and transmitter	IRZ00	FM-*0677	NA	Measurement/Permissive/Alarm
	Freshwater flow meter and transmitter	IRZ00	FM-*0678	NA	Measurement/Permissive/Alarm
	Freshwater control valve	IRZ00	FV-*0630	NA	Measurement/Permissive/Alarm
	Eyewash/shower activation flow switch	IRZ00	FS-*0681	NA	Activates eyewash station

TABLE 3.1-1
Control Set Points and Approaches
Groundwater Remedy Operation and Maintenance Manual
Volume 1: Operation and Maintenance Plan
PG&E Topock Compressor Station, Needles, California

System	Equipment [a]	Location Identification Number	Tag Number	Set Point [b]	Control Approach [c]
	Well maintenance reagent tank level sensor and transmitter	IRZ00	LE/LT-*0659	NA	Measurement/Permissive/Alarm Low-level de-energizes reagent pump (PMP-*0643) High-level closes solenoid valve FV-*0630 and disables reagent pump PMP-*0643 if in alarm
	Well maintenance reagent pump VFD	IRZ00	PMP-*0643	NA	Measurement/Permissive/Alarm
	Well maintenance reagent pump pressure switch	IRZ00	PSH-*0668	NA	Measurement/Permissive/Alarm Disables well maintenance reagent hose pump PMP-*0643 if in alarm
	Well maintenance reagent flow meter and transmitter	IRZ00	FM-*0679	NA	Measurement/Permissive/Alarm
	Well maintenance reagent modulating flow control valve	IRZ00	FCV-*0631	NA	Measurement/Permissive/Alarm
	Well maintenance reagent pressure sensor and transmitter	IRZ00	PIT-*0661	NA	Measurement/Permissive/Alarm
	Produced water transfer pump modulating valve	IRZ00	FCV-*0633	NA	Measurement/Permissive/Alarm
	Produced water transfer pump VFD	IRZ00	PMP-*0645	NA	Measurement/Permissive/Alarm
	Produced water transfer pump pressure switch	IRZ00	PSH-*0669B	NA	Measurement/Permissive/Alarm Disables produced water transfer pump PMP-*0645 if in alarm
	Produced water line flow meter and transmitter	IRZ00	FE/FIT-*0680B	NA	easurement/Permissive/Alarm D
	Clean-in-place pump modulating control valve	IRZ00	FCV-*0632	NA	Measurement/Permissive/Alarm
	Clean-in-place pump VFD	IRZ00	PMP-*0644	NA	Measurement/Permissive/Alarm
	Clean-in-place pump pressure switch	IRZ00	PSH-*0669A	NA	Measurement/Permissive/Alarm Shuts down CIP reagent pump PMP-*0644 if in alarm
	Clean-in-place flow meter and transmitter	IRZ00	FE/FIT-*0680A	NA	easurement/Permissive/Alarm S
	Conditioned water injection pump modulating valve	IRZ00	FCV-*0628S	NA	Measurement/Permissive/Alarm
	Conditioned water injection pump VFD	IRZ00	PMP-*0648	NA	Measurement/Permissive/Alarm
	Conditioned water injection pump pressure switch	IRZ00	PSH-*0669C	NA	Measurement/Permissive/Alarm Shuts down conditioned water injection pump PMP-*0648 if in alarm

TABLE 3.1-1
Control Set Points and Approaches
Groundwater Remedy Operation and Maintenance Manual
Volume 1: Operation and Maintenance Plan
PG&E Topock Compressor Station, Needles, California

System	Equipment [a]	Location Identification Number	Tag Number	Set Point [b]	Control Approach [c]
	Conditioned water line flow meter and transmitter	IRZ00	FM-*0680C	NA	Measurement/Permissive/Alarm
	Well maintenance room level switch	IRZ00	LSH-*0649	NA	Measurement/Permissive/Alarm Locking high alarm disables all extraction well/backwash pumps (PMP-*034X, *044X, and *054X) and pumps within building (PMP-*064X), and closes flow control valves (FCV-*06XX) if in alarm
Groundwater Injection Wells	Injection well level transducers and transmitters	IRZ25 IRZ27 IRZ29 IRZ31 IRZ33	LT-*0463H LT-*0463I	TBD	Measurement/Permissive/Alarm High-level closes automated valve until injection well water level recovers to restart injection water level set point High-high-level closes automated valve and sends alarm notification
	Injection well level transducers and transmitters	IRZ35 IRZ37 IRZ39	LT-*0462E	TBD	Measurement/Permissive/Alarm High-level closes automated valve until injection well water level recovers to restart injection water level set point High-high-level closes automated valve and sends alarm notification
	Injection well level transducers and transmitters	IRZ11A/B IRZ13A/B IRZ15A/B IRZ16A/B IRZ17A/B IRZ19A/B IRZ20A/B IRZ21A/B	LT-*0464H LT-*0464I LT-*0465H LT-*0465I	TBD	Measurement/Permissive/Alarm High-level closes automated valve until injection well water level recovers to restart injection water level set point High-high-level closes automated valve and sends alarm notification
	Injection well flow meters and transmitters	IRZ35 IRZ37 IRZ39	FM-*0472A	NA	Measurement/Permissive/Alarm
	Injection well flow meters and transmitters	IRZ25 IRZ27 IRZ29 IRZ31 IRZ33	FM-*0473A FM-*0473B	NA	Measurement/Permissive/Alarm

TABLE 3.1-1
Control Set Points and Approaches
Groundwater Remedy Operation and Maintenance Manual
Volume 1: Operation and Maintenance Plan
PG&E Topock Compressor Station, Needles, California

System	Equipment [a]	Location Identification Number	Tag Number	Set Point [b]	Control Approach [c]
	Injection well flow meters and transmitters	IRZ11A/B IRZ13A/B IRZ15A/B IRZ16A/B IRZ17A/B IRZ19A/B IRZ20A/B IRZ21A/B	FM-*0474A FM-*0474B FM-*0475A FM-*0475B	NA	Measurement/Permissive/Alarm
	Injection well meter vault level switch	IRZ25 IRZ27 IRZ29 IRZ31 IRZ33	LSH-*0453A	NA	Measurement/Permissive/Alarm Locking high-level alarm disables pumps (PMP-*044X) and flow control valves (FCV-*0408 and FCV-*0409)
	Injection well vault level switch	IRZ25 IRZ27 IRZ29 IRZ31 IRZ33	LSH-*0453B	NA	Measurement/Permissive/Alarm Locking high-level alarm disables pumps (PMP-*044X) and flow control valves (FCV-*0408 and FCV-*0409)
	Injection well meter vault level switch	IRZ11A/B IRZ13A/B IRZ15A/B IRZ16A/B IRZ17A/B IRZ19A/B IRZ20A/B IRZ21A/B	LSH-*0454A	NA	Measurement/Permissive/Alarm Locking high-level alarm disables pumps (PMP-*044X) and flow control valves (FCV-*041X)
	Injection well vault level switch	IRZ11A/B IRZ13A/B IRZ15A/B IRZ16A/B IRZ17A/B IRZ19A/B IRZ20A/B IRZ21A/B	LSH-*0454B LSH-*0454C	NA	Measurement/Permissive/Alarm Locking high-level alarm disables pumps (PMP-*044X) and flow control valves (FCV-*041X)
	Injection well meter vault level switch	IRZ35 IRZ37 IRZ39	LSH-*0452A	NA	Measurement/Permissive/Alarm Locking high-level alarm disables pumps (PMP-*0443) and flow control valves (FCV-*0404)
	Injection well modulating flow control valve	IRZ25 IRZ27 IRZ29 IRZ31 IRZ33	FCV-*0408 FCV-*0409	NA	Measurement/Permissive/Alarm

TABLE 3.1-1
Control Set Points and Approaches
Groundwater Remedy Operation and Maintenance Manual
Volume 1: Operation and Maintenance Plan
PG&E Topock Compressor Station, Needles, California

System	Equipment [a]	Location Identification Number	Tag Number	Set Point [b]	Control Approach [c]
	Injection well modulating flow control valve	IRZ35 IRZ37 IRZ39	FCV-*0404	NA	Measurement/Permissive/Alarm
	Injection well modulating flow control valve	IRZ11A/B IRZ13A/B IRZ15A/B IRZ16A/B IRZ17A/B IRZ19A/B IRZ20A/B IRZ21A/B	FV-*0414 FV-*0415 FV-*0416 FV-*0417	NA	Measurement/Permissive/Alarm
	Injection well packer pressure switch	IRZ25 IRZ27 IRZ29 IRZ31 IRZ33	PSL-*0463G	NA	Measurement/Permissive/Alarm
	Injection well packer pressure switch	IRZ11A/B IRZ13A/B IRZ15A/B IRZ16A/B IRZ17A/B IRZ19A/B IRZ20A/B IRZ21A/B	PSL-*0464G PSL-*0465G	NA	Measurement/Permissive/Alarm
Inner Recirculation Loop Groundwater Extraction and Injection					
Groundwater Extraction Wells	Extraction well level transducers and transmitters	RB1 RB2 RB3 RB4 RB5	PLT-*0560B	NA	Measurement/Permissive/Alarm Low-level disables extraction well pump until groundwater level recovers to restart extraction level set point
	Extraction well flow meters and transmitters	RB1 RB2 RB3 RB4 RB5	FM-*0570A	NA	Measurement/Permissive/Alarm D
	Extraction well header pressure sensor and transmitter	RB1 RB2 RB3 RB4 RB5	PIT-*0560A	NA	Measurement/Permissive/Alarm Disables extraction pump PMP-*0540 if in alarm

TABLE 3.1-1
Control Set Points and Approaches
Groundwater Remedy Operation and Maintenance Manual
Volume 1: Operation and Maintenance Plan
PG&E Topock Compressor Station, Needles, California

System	Equipment [a]	Location Identification Number	Tag Number	Set Point [b]	Control Approach [c]
	Extraction well vault level switch	RB1 RB2 RB3 RB4 B5R	LSH-*0550A	NA	Measurement/Permissive/Alarm Locking high alarm disables extraction pump PMP-*0540 if in alarm
	Extraction well packer pressure switch	RB1 RB2 RB3 RB4 RB5	PSL-*0560C	NA	Measurement/Permissive/Alarm
Groundwater Injection Wells	Injection well level transducers and transmitters	IRL1 IRL2 IRL3 IRL4	LT-*0561F LT-*0562F	NA	Measurement/Permissive/Alarm High-level closes automated valve until injection well water level recovers to restart injection water level set point High-high-level closes automated valve and sends alarm notification
	Injection well flow meters and transmitters	IRL1 IRL2	FM-*0571A	NA	Measurement/Permissive/Alarm
	Injection well flow meters and transmitters	IRL3 IRL4	FM-*0572C	NA	Measurement/Permissive/Alarm
	Injection well vault level switch	IRL1 IRL2 IRL3 IRL4	LSH-*0551B LSH-*0552B	NA	Measurement/Permissive/Alarm Locking high alarm disables pumps (PMP-*054X) and closes flow control valves (FCV-*050X or FV-*051X) if in alarm
	Injection well meter vault level switch	IRL1 IRL2 IRL3 IRL4	LSH-*0551A LSH-*0552A	NA	Measurement/Permissive/Alarm Locking high alarm disables pumps (PMP-*054X) and closes flow control valves (FCV-*050X or FV-*051X) if in alarm
	Injection well modulating flow control valve	IRL1 IRL2	FV-*0507	NA	Measurement/Permissive/Alarm
	Injection well modulating flow control valve	IRL3 IRL4	FV-*0513	NA	Measurement/Permissive/Alarm
	Injection well backwash modulating flow control valve	IRL1 IRL2 IRL3 IRL4	FCV-*0509 FV-*0514	NA	Measurement/Permissive/Alarm
	Injection well packer pressure switch	IRL1 IRL2	PSL-*0562	NA	Measurement/Permissive/Alarm

TABLE 3.1-1
Control Set Points and Approaches
Groundwater Remedy Operation and Maintenance Manual
Volume 1: Operation and Maintenance Plan
PG&E Topock Compressor Station, Needles, California

System	Equipment [a]	Location Identification Number	Tag Number	Set Point [b]	Control Approach [c]
Topock Compressor Station Loop Groundwater Extraction and Injection					
Groundwater Extraction Wells	Extraction well level transducers and transmitters	TWB1 TWB2	PLT-*0361B	NA	Measurement/Permissive/Alarm Low-level disables extraction well pump until groundwater level recovers to restart extraction level set point
	Extraction well level transducers and transmitters	ER1 ER2 ER3 ER4 ER6	PLT-*0360B	NA	Measurement/Permissive/Alarm
	Extraction well header pressure sensor and transmitters	TWB1 TWB2	PIT-*0361A	NA	Measurement/Permissive/Alarm Disables extraction pump PMP-*0341 if in alarm
	Extraction well header pressure sensor and transmitters	ER1 ER2 ER3 ER4 ER6	PIT-*0360B	NA	Measurement/Permissive/Alarm Disables extraction pump PMP-*0340 if in alarm
	Extraction well flow meters and transmitters	TWB1 TWB2	FM-*0371A	NA	Measurement/Permissive/Alarm D
	Extraction well flow meters and transmitters	ER1 ER2 ER3 ER4 ER6	*FM-*0370A	NA	Measurement/Permissive/Alarm
	Extraction well meter vault level switch	TWB1 TWB2	LSH-*0351A	NA	Measurement/Permissive/Alarm Locking high alarm disables extraction pump PMP-*0341 if in alarm
	Extraction well meter vault level switch	ER1 ER2 ER3 ER4 ER6	LSH-*0350A	NA	Measurement/Permissive/Alarm Locking high alarm disables extraction pump PMP-*0340 if in alarm

TABLE 3.1-1
Control Set Points and Approaches
Groundwater Remedy Operation and Maintenance Manual
Volume 1: Operation and Maintenance Plan
PG&E Topock Compressor Station, Needles, California

System	Equipment [a]	Location Identification Number	Tag Number	Set Point [b]	Control Approach [c]
Groundwater Injection Wells	Injection well level transducers and transmitters	TCS1 TCS2	PLT-*0362E PLT-*0362F	TBD	Measurement/Permissive/Alarm High-level closes automated valve until injection well water level recovers to restart injection water level set point High-high-level closes automated valve and sends alarm notification
	Injection well flow meters and transmitters	TCS1 TCS2	FM-*0372A FM-*0372B	NA	Measurement/Permissive/Alarm
	Injection well vault level switch	TCS2	LSH-*0352B	NA	Measurement/Permissive/Alarm Locking high-level alarm disables the extraction/backwash pumps (PMP-*034X) and closes the flow control valves (FV-*0307 and FV-*0308)
	Injection well meter vault level switch	TCS1	LSH-*0352A	NA	Measurement/Permissive/Alarm Locking high-level alarm disables the extraction/backwash pumps (PMP-*034X) and closes the flow control valves (FV-*0307 and FV-*0308)
	Injection well modulating flow control valve	TCS1 TCS2	FV-*0307 FV-*0308	NA	Measurement/Permissive/Alarm
	Injection well packer pressure switch	TCS1 TCS2	*PSL-*0362D	NA	Measurement/Permissive/Alarm

Notes:
Device and equipment numbers shown on design drawings I-01-01, I-02-01, I-02-02, I-03-01 through I-03-03, I-04-01 through I-04-06, I-05-01 through I-05-03, I-06-01 through I-06-04, I-11-01 though I-11-04, I-12-01 through I-12-05, I-14-01, and I-14-02 in Appendix A.
[a] Listed equipment includes control, permissive, measurement, and alarm devices.
[b] The set point is the specific value or position that the equipment is set to attain. Set points only apply to control devices.
[c] The control approach describes how the control equipment achieves the set point. Control approaches only apply to control devices. Measurement, permissive, and alarm devices are indicated as such.
[d] The Site B well is a contingent freshwater supply source and HNWR-1 is a secondary freshwater supply source (not listed). The set points/control approaches for HNWR-1A would apply to the Site B and HNWR-1 wells if they were used for freshwater supply.
NA= not applicable; TBD = to be determined

SECTION 4

Well Maintenance and Decommissioning

The final groundwater remedy is reliant on several dozen wells used for the IRZ, freshwater and carbon-amended injection, and groundwater extraction. For each of these types of wells, especially for the injection and IRZ wells, regular maintenance such as backwashing and rehabilitation is vital to maintain efficient and effective operations during the decades long projected life of the remedy. Well maintenance will also prevent or reduce the need for drilling new replacement wells. Sections 4.1 and 4.2 discuss approaches for assessing well performance and well maintenance; detailed Standard Operating Procedures for conducting the well maintenance activities are presented in Appendix B. These maintenance activities will produce an ongoing water stream that must be managed as part of the remedial action; protocols for management of remedy-produced water are discussed in Section 6 of this O&M Plan.

Also included in this section is information related to well decommissioning (Section 4.3). This section includes the general approach for decommissioning wells related to the final remedy at Topock as well as wells utilized as part of site characterization activities, and will be a guide to determining the appropriate methods for a given well. The general approach for well decommissioning was developed by a subgroup that includes PG&E, DTSC, DOI, and Interested Tribes. Detailed SOPs for conducting well decommissioning are based on this general approach and are presented in Appendix B.

4.1 Well Performance Tracking

Well performance will be monitored to assess the frequency and methods required for well maintenance (Section 4.2). Well performance monitoring consists of establishment of a baseline (baseline assessment) during well installation/development and system startup (commissioning). Once the system is online, well performance will be tracked by comparing the baseline data to long-term performance data. The following subsections describe the data collection planned as part of well performance tracking.

4.1.1 Baseline Assessment

A baseline assessment will be conducted to characterize the initial well performance. Reliable baseline data is a necessity for tracking well performance and understanding performance degradation. Future data will be compared to baseline conditions to diagnose potential well plugging problems and equipment failure, and will guide decisions related to well performance mitigation and well rehabilitation methods. Key elements of the baseline assessment are detailed in the following subsections.

4.1.1.1 Well Capacity

The term *well capacity* is used in this plan to describe the well performance regardless of well type, but refers to the specific capacity of an extraction well or specific injectivity for an injection well. Reliable and frequent measurements of water levels and flow rates are important for evaluating well capacity. Specific capacity and specific injectivity are defined as follows:

Specific Capacity – defined as the rate of discharge or extraction per unit of drawdown in the extraction well, expressed in gallons per minute per foot (gpm/ft):

$$Specific\ Capacity\ \left(\frac{gpm}{ft}\right) = \frac{discharge\ rate\ (gpm)}{pumping\ water\ level\ (ft) - static\ water\ level\ (ft)}$$

Specific Injectivity – defined as the rate of injection per unit of drawup in the injection well, expressed in gallons per minute per foot (gpm/ft):

$$Specific\ Injectivty\ \left(\frac{gpm}{ft}\right) = \frac{injection\ rate\ (gpm)}{injecting\ water\ level\ (ft) - static\ water\ level\ (ft)}$$

The specific capacity or specific injectivity is a direct measure of well performance decline when compared to a baseline reference capacity (that is measured when pumping or injecting at similar rates). During well testing, "static" water level data will be collected from each well and will be used to calculate the specific capacity and specific injectivity once the well is in service. Water level logging (with level probes) in all wells associated with the given test as well as in the Colorado River should begin 1 to 2 weeks prior to startup so that background water level trends can be evaluated. Static water levels should be measured prior to start-up of extraction or injection.

4.1.1.2 Flow Logging and Well Performance Testing

Baseline flow logging and aquifer testing results are required for comparison with future data to understand the specific intervals or depths of well screen where clogging has occurred.

Flow logging can be a useful element of the baseline evaluation, particularly in wells with longer screens. In shorter-screened wells (less than about 75 feet of screen length) there is typically less need to understand the variations in flow along the screen, and therefore flow logging is less useful. Spinner logging, the most common method of flow logging, measures the contribution of groundwater flow into the well from various depth intervals of screen. Measurements of vertical flow velocities are collected under dynamic (pumping/injection) conditions and analyzed to develop a flow profile. Other methods of flow logging that have been conducted as part of the Topock Remediation Project that can be considered for use during well testing, include hydrophysics and dye pulse logging.

Following development, specific capacity and injectivity testing will be conducted at all extraction and injection wells so that baseline specific capacity/injectivity can be evaluated. Typically, the testing will include evaluation of specific capacity/injectivity at flow increments of approximately 50, 100, and 150 percent of the design extraction or injection rate. These tests will typically be conducted over a 2- to 12-hour period depending on the performance of the well and the water level in the pumping well will be monitored using pressure transducers. Field water quality measurements will be monitored on the pump effluent at the surface (e.g., specific conductance, pH, and oxidation-reduction potential) during testing. For injectivity assessment, this testing will involve extracting water from the well, storing the water in portable tanks, then injecting the water back into the well through a filter to remove particulate matter. Injectivity testing may also include the use of fresh water. Chemical additives will not be used during well testing activities, and therefore the water will not be tested prior to re-injection. The injection rate will be increased in three or more steps. This type of step test provides data that can be used to estimate the maximum injection capacity of a well. These same test procedures were used for the Topock IM-3 injection wells. An abbreviated version of baseline specific capacity testing will be conducted at all new monitoring wells. Monitoring wells, which are not designed for target extraction rates, will be pumped at one to three different rates following development such that specific capacity information can be compared to that collected during subsequent monitoring and/or re-development events (see Section 4.2.4). The use of slug testing may also be appropriate to assess changes in well hydraulics over time.

Sand content and turbidity with pumping time will be measured during the aquifer testing to establish a baseline for these parameters using a Rossum Sand Tester and turbidimeter.

Once the system is online and operational, the well capacity baselines will be re-evaluated over a much longer period to confirm that steady state conditions are met and the capacity is not fluctuating. It is expected that this will be done during the first month to few months of the system being commenced.

4.1.1.3 Video Survey

Video surveys can be used for construction acceptance (once the well is installed and developed) and provide a baseline for future well diagnostics. Once development is complete, and all equipment is removed from the well, a baseline video survey will be conducted on all remediation wells to support diagnosis of future well problems. Video survey results provide direct visual evidence of potential problems in the well when a baseline survey is compared to a survey conducted once well degradation has occurred.

The video survey should be conducted using a color camera capable of side-scanning and photographs plus video recording of the survey so that it can be viewed later. As a general guide, the video survey should be conducted after the well has remained idle for at least 24 hours to improve the quality of the video.

4.1.1.4 Water Quality Sampling

Water quality data incorporating physical, field chemistry, laboratory chemistry, and biological analytes provides important information on system status. These data help diagnose well clogging issues in the early stages, providing information critical for designing corrective measures.

Water quality samples collected from the wells will be analyzed for the biological and geochemical analytical parameters, as listed in Exhibit 4.1-1, and field screening parameters, as listed in Exhibit 4.1-2. Results will be used as a reference point during future diagnosis of well performance decline.

The baseline and long-term monitoring plan for the freshwater source is included in Section 5.2 of Volume 2 of the O&M Manual.

EXHIBIT 4.1-1
Biological and Geochemical Analytical Monitoring Parameters
Groundwater Remedy Operation and Maintenance Manual
Volume 1: Operation and Maintenance Plan
PG&E Topock Compressor Station, Needles, California

Constituent	Preferred Method	Units	Extraction Wells	Injection Wells	IRZ Injection Wells
Total Organic Carbon (TOC)	EPA 415.1	mg/L	X	X	X[a]
Total Dissolved Solids (TDS)	EPA 160.1	mg/L	X	X	X[a]
Title 22 Metals (Total and Dissolved)	EPA 6010B	µg/L	X[a]	X[a]	X[a]
Iron and Manganese (Total and Dissolved)	EPA 6010B	µg/L	X	X	X[a]
Cations: Calcium, Potassium, Magnesium, Sodium (Total)	EPA 6010B	µg/L	X	X	X[a]
Anions: Chloride, Fluoride, Bromide, Nitrate, Nitrite, Sulfate	EPA 300.0A	mg/L	X	X	X[a]
Sulfide	EPA 9215	mg/L	X[a]	X[a]	
Alkalinity as Total, Carbonate, Bicarbonate	EPA 310.1	mg/L	X	X	X[a]
Phosphate (low detection limits ~0.10 mg/L)	EPA 300.0A	mg/L	X[a]	X[a]	
Total Phosphorus (low detection limits ~0.10 mg/L)	SM 4500-P B	mg/L	X[a]	X[a]	
Silica	SM 4500-Si D	mg/L	X[a]	X[a]	
Hardness as $CaCO_3$	SM 2340 C	mg/L	X	X	
Ammonia-N	SM 4500-NH3 D	mg/L	X[a]	X[a]	
Total Kjeldahl Nitrogen (TKN)	SM 4500-N B	mg/L	X[a]	X[a]	
Biochemical Oxygen Demand (BOD)	EPA 405.1	mg/L	X[a]	X[a]	

Notes:

[a] Parameters will be collected during baseline monitoring, and may not be collected at later sampling dates. Baseline monitoring will include two samples collected to establish the baseline conditions; a third baseline sample will be collected if it is necessary to confirm the baseline condition should a given data point appear anomalous. The two baseline samples will be collected approximately one month apart; however, the time between samples might be shortened if determined necessary to ensure that the collection of these samples doesn't delay startup of the system.

µg/L = micrograms per liter
EPA = U.S. Environmental Protection Agency
mg/L = milligrams per liter

EXHIBIT 4.1-2
Field Screening Parameters
Groundwater Remedy Operation and Maintenance Manual
Volume 1: Operation and Maintenance Plan
PG&E Topock Compressor Station, Needles, California

Constituent	Preferred Method	Units	Extraction Wells	Injection Wells	IRZ Injection Wells
Temperature	Hach HQ40d (or eq.)	°C	X	X	X
pH	Hach HQ40d (or eq.)	pH unit	X	X	X
Specific Conductance (SC)	EPA 1201.1[a]	mS/cm	X	X	X
Turbidity	Hach 2100P Turbidimeter HQ40d (or eq.)	NTU	X	X	X
Dissolved Oxygen (DO)	Hach HQ40d (or eq.)	mg/L	X	X	X
Oxidation-Reduction Potential (ORP)	Multicomponent Probe [b]	mV	X	X	X
Biological Activity Tests[c]	Field Kit	+/-	X	X	X
Sand Content[c]	Rossum Sand Tester	ppm	X	X	X
Modified Fouling Index (MFI)[c]	N.A.	N.A.	X		

Notes:

[a] U.S. Environmental Protection Agency, *Test Methods for Evaluating Solid Waste: Physical/Chemical Methods*, Third Edition; Final Update IV B

[b] A multi component probe will be used to measure ORP which will then be corrected to redox potential (E_h).

[c] Parameters will be collected during baseline monitoring, and may not be collected at later sampling dates.

Hach® is a registered trademark of the Hach Company, Loveland, Colorado

°C = degrees Celsius

eq = equivalent

mS/cm = milliSiemens per centimeter

mg/L = milligrams per liter

mV = millivolts

N.A. = not applicable

NTU = nephelometric turbidity unit

ppm = parts per million

4.1.2 Long-Term Performance Tracking

Long-term performance tracking consists of well capacity monitoring, wellhead inspection and testing, and water quality monitoring. Long-term performance tracking will be conducted routinely throughout the life of the remedial action. Performance tracking data will be used to report well performance trends and to identify potential performance declines. Performance tracking frequency requirements are shown in Exhibit 4.1-3. Long-term performance tracking data will be reported in the Well Performance Report, as described in Section 4.2.5.

EXHIBIT 4.1-3
Recommended Performance Monitoring Activities Frequency
Groundwater Remedy Operation and Maintenance Plan
Volume 1: Operation and Maintenance Plan
PG&E Topock Compressor Station, Needles, California

Performance Monitoring Activity	Frequency	Extraction Wells	Injection Wells	IRZ Injection Wells	Freshwater Source
Baseline Evaluation	Once	X	X	X	X
Manual Well Capacity Measurement	See footnote a	X	X	X	X
Well Capacity Evaluation and Performance Code Update	Monthly	X	X	X	X
Wellhead Inspection	Quarterly	X	X	X	X
Biological & Geochemical Sampling (see Exhibit 4.1-1)	Annually	X[b]	X		X
Field Screening Sampling and Testing					
• Temp, pH, Specific Conductance, Turbidity, Dissolved Oxygen, Redox Potential	Annually, or as needed	X[b]	X		X
• Biological Activity Tests		X	X		X
• Sand Content		X[b]	X		X
• Modified Fouling Index (MFI)		X			X

Notes:
[a] The frequency of manual well capacity measurement for wells used for determining hydraulic gradients and/or capture zones is monthly when the Remedy SCADA system is capable of calculating a daily average well capacity based on minute data. If this assumption is not true, the frequency should be increased to weekly as that becomes the only means of performance monitoring. The frequency of manual well capacity measurement for wells not used for measuring gradients and/or capture zones is annually, or as needed, based on performance data.
[b] Extraction wells will be sampled monthly for the first quarter, quarterly for the next three quarters, semiannually between years 1 and 2 of operation, then annually after the second year of operation.

4.1.2.1 Well Capacity Monitoring

The Remedy SCADA system will record water levels and extraction/injection flow rates from data transmitters at the wells (electronic data). With these data, the SCADA system can track well capacity at selected frequencies.

To evaluate the level-indicating transmitter (LIT) accuracy and as a backup in case of level transmitter failure, water levels should be measured manually as part of the performance evaluation and documented for reporting purposes. Manual water level data should be collected from within dedicated sounding tubes/stilling wells, or if a sounding tube/stilling well is unavailable, from within the well casing. If the electronic and manual water level data (and resulting capacity calculations) disagree, then the level probes must be rescaled or evaluated for functionality.

A generalized well performance color code system related to well capacity has been established for use by the technicians in the field, and is summarized in Exhibit 4.1-4.

The demotion/promotion of the performance color code will result in consideration for routine maintenance frequency changes (see Exhibit 4.2-1 in Section 4.2.1, Routine Maintenance). For example, if the capacity of a given well drops below 85 percent, the well will be coded as yellow and potentially undergo more frequent maintenance or rehabilitation until the capacity is improved. Regardless, well rehabilitation should be considered once the well capacity decreases to 75 percent of its baseline value (Driscoll 1986). The expected rehabilitation frequency for the different types of wells is presented in Section 4.2.3.

EXHIBIT 4.1-4
Well Performance Color Code System
Groundwater Remedy Operation and Maintenance Manual
Volume 1: Operation and Maintenance Plan
PG&E Topock Compressor Station, Needles, California

Well Performance Code	Well Performance Color Code Description	Well Performance Percent of Baseline (low range)	Well Performance Percent of Baseline (high range)
Code Green	Good	90	100
Code Yellow	Fair	80	90
Code Red	Poor	<70	80

4.1.2.2 Wellhead Inspection and Field Parameter Testing

Wellhead inspection and field parameter testing is intended to detect and evaluate damage to the above-ground well components, well casing and screen, and the discharge/supply line, and the potential for suspended solids in the freshwater source. Key elements of this inspection and testing that may be used include:

1. **Visual Inspection.** The aboveground discharge/supply pipe(s), valves, gauges, meters, well seals, well pads, vaults, and flanges should be inspected for visible leaks and damage.
2. **Field Parameters: temperature, pH, turbidity, specific conductance (SC), dissolved oxygen (DO), redox potential**. Field parameters should be measured in accordance with the methods listed in Exhibit 4.1-2.
3. **Biological Activity Tests.** Biological Activity Reaction Tests (BARTs) are bacteria testing kits used to measure the population size and activity of specific bacteria groups such as: iron related bacteria (IRB), sulfate reducing bacteria (SRB), slime forming bacteria (SLYM), and others. Fouling deposit samples can also be analyzed by specialty laboratories to quantify the composition of the sample and the type and amount of bacteria. Analyses typically include a microscopic evaluation to determine the amount of non-biological deposits such as iron and manganese oxide, silica, phosphate compounds, and insoluble particulates. Biological analyses include plate counts (colonies per milliliter [mL]), positive/negative tests for iron and manganese oxidizing bacteria and sulfate reducing bacteria, percentage of anaerobic/aerobic growth, adenosine triphosphate (ATP) (cells per mL), and specific bacterial identification.
4. **Sand Content Testing.** Sand testing using a Rossum Sand Content Tester is conducted to evaluate the amount of sand being produced from extraction wells and injection wells during backwashing.
5. **Modified Fouling Index (MFI).** The MFI test is a method of characterizing the plugging potential of suspended solids in the Source. The MFI test measures the combined effect of solids concentration, particle size, particle composition, and develops a clogging index (Hutchinson and Randall 1997) which provides a warning of potential clogging and helps to establish a frequency of rehabilitation or modification of the routine maintenance frequency.

4.1.2.3 Water Quality Monitoring

Water quality monitoring as discussed in this section pertains specifically to the assessment and tracking of well performance. Water quality monitoring for the purposes of plume monitoring or remedy performance is detailed in Volume 2 of this O&M Manual. During the life of the remediation system, water samples will be collected from the extraction and injection wells and the freshwater source. The samples will be analyzed for the biological and geochemical analytical monitoring parameters and field screening parameters listed in Exhibits 4.1-1 and 4.1-2, respectively. Results will be used as needed to evaluate causes of well performance decline and to mitigate or prevent plugging at the wells. Sampling frequency may be adjusted as the results are evaluated.

4.2 Well Maintenance

This section includes the general approach for maintaining the health of all the Topock wells related to the Final Remedy and is a guide to performance monitoring and maintenance frequency. This section describes maintenance activities conducted to ensure that the wells achieve the operational goals. Routine and non-routine activities discussed in this plan focus on individual wells and their elements (screen, casing, gravel pack, and the aquifer formation near the borehole wall, plus down-hole equipment and pumps). Maintenance information for above-grade equipment such as valves, gauges, flanges, meters, vaults, etc., are included in Section 2.

4.2.1 Routine Maintenance

Routine or preventative maintenance is used to mitigate performance losses at extraction and injection wells. Routine maintenance methods are generally conducted without intrusive modifications to the wellhead or well and do not require removing existing equipment from the well for access.

Simple operational procedures are implemented in order to prevent clogging and maintain well capacity over the service life of the well. One non-invasive procedure for extraction wells involves surging and pumping to remove siltation or mineral encrustation, while tightening the filter pack. Backwashing of the injection wells involves a similar non-invasive procedure. Backwashing is conducted by stopping injection and pumping the well for a short period. Backwashing removes the solids which have accumulated in the well screen and gravel pack during injection. Aqua Gard™ is the other non-intrusive method that can be done on both extraction and injection wells.

The initial recommendation for routine maintenance frequency is discussed in Section 4.2.3. However, as maintenance activities are implemented during system operation the frequency may change based on the conclusions of well performance tracking data. Exhibit 4.2-1 presents suggested modifications to routine maintenance frequencies based on the color code assigned to each well though performance tracking.

Operational details associated with routine maintenance for extraction and injection wells are presented in the following subsections, respectively.

EXHIBIT 4.2-1
Routine Maintenance Matrix for Extraction and Injection Wells
Groundwater Remedy Operation and Maintenance Manual
Volume 1: Operation and Maintenance Plan
PG&E Topock Compressor Station, Needles, California

		Extraction Wells		Injection Wells		
Well Performance Code	Well Performance Color Code Description	Frequency of Pumping and Surging (months)	Frequency Aqua Gard™ (months)	Frequency of Backwashing (weeks)	Frequency Aqua Gard™ (months)[a]	Performance Criteria for Code Promotion
Code Green	Good	As needed	18	1	12	Not applicable
Code Yellow	Fair	As needed	12	0.75	9	Improves to more than 90% of baseline
Code Red	Poor	As needed	6	0.5	6	Improves to more than 80% of baseline

Notes:
[a] Aqua Gard™ may not be used on IRZ injection wells and if it is, the frequency is to be determined.

4.2.1.1 Extraction Well Routine Maintenance

Extraction well routine preventative maintenance methods include redevelopment by pump and surge methods. Pump and surge methods consist of rapidly cycling the submersible pump on and off (surge) several times (approximately five times) so that water rushes in and out of the well screen causing flow reversals in the gravel pack and formation, followed by pumping. During pump and surge, the pump should be run only long enough to fill the riser pipe. Following pump and surge, the specific capacity should be recorded at the end of each pump cycle. Pump and surge activities should continue until little improvement is measured for the specific capacity

after each cycle. Pump and surge routine maintenance only works on extraction wells where a foot valve or check valve is absent in the pump and column pipe and an air relief valve is installed at the well head prior to any check valves, flow meters or other equipment or valves. Extraction wells that do not have this type of equipment configuration should not be pumped and surged as no flow reversals will occur in the well rendering the work of no use. The pump and surge activity will generally be performed manually, although it may be partially automated using the SCADA. Required equipment may include a tank, trailer, bag filter and hose.

Aqua Gard™ is a more aggressive routine maintenance event that can be conducted at both the extraction and injection wells. The method is completed by injecting cryogenic liquid carbon dioxide (CO_2) into existing well access tubes. During the injection, plugging and fouling deposits are dislodged and detached from the filter pack and formation through rapid gas expansion during the liquid/gas phase change. Once the injection is complete, pumping, surging, and/or backwashing is employed to agitate and remove the material that was loosened during the injection. Some of the necessary equipment needed to conduct Aqua Gard™ may include all or some of the following: a CO_2 injection trailer, CO_2 storage vessel, support truck, pump rig and/or crane (if a pump or pipe needs to be installed/removed), bag filters, and a support truck. This equipment is similar to what was used during the IM-3 injection well Aqua Gard™ work that was completed in spring of 2012. There may be unforeseen or other specialty equipment that is not included in the list above.

Periodic pump and surge and Aqua Gard™ activities may be conducted at each extraction well. The initial frequency of pump and surge activities and Aqua Gard™ are presented in Section 4.2.3, but the frequency may increase if well performance declines between events. Conversely, if well performance trends remain stable, the frequency could decrease.

Application of Code Red classification for six or more consecutive cycles may indicate that the well requires repair or invasive rehabilitation methods. The inability to recover specific capacity through routine maintenance should be considered alongside the performance evaluation data. Once the cause(s) of the performance decline are better understood, a plan should be established to repair or rehabilitate the well. Other existing plans may influence the decision to proceed with repair or rehabilitation.

Extraction wells that are operating under idle mode operation should be periodically exercised by returning the well to extraction mode operation for 24 hours. Routine maintenance events at idle wells may occur at the same frequency as for wells that are active.

4.2.1.2 Injection Well Routine Maintenance

Backwashing is a routine preventative maintenance method used to prevent injection well performance loss. Backwashing consists of turning off injection and pumping the well for a total of 30 minutes. Some wells will require that pumping is paused (stopped) before a total of 30 minutes so that the pumping water level does not reach the well screen depth – this allows the well to recover before being backwashed for the remaining time until a total of 30 minutes of pumping has been accomplished. Backwashing loosens and removes sediment, encrustation, or biofouling that may be present on the well screen or gravel pack. It is anticipated that the backwashing pumping rate will be roughly twice the injection rate. The backwashing will be conducted such that the recovery period is normalized, i.e. the well will restart at a fixed water level recovery percentage (such as 90 percent), so that the recovery can be consistently compared across backwashing events.

As discussed above in the Extraction Well Routine Maintenance section, the Aqua Gard™ application can also be used at the injection wells. The process and steps are similar as discussed above except backwashing will follow injection.

The initial frequency of backwashing and Aqua Gard™ are presented in Section 4.2.3, but the frequency may increase if the well performance declines and may decrease if routine maintenance improves the well performance.

Well repair or rehabilitation may be required for injection wells that operate under a well performance Code Red. The inability to recover specific injectivity through routine maintenance should be considered alongside the performance evaluation data. Once the cause(s) of the performance decline are better understood, a plan should

be established to repair or rehabilitate the well. Other existing plans may influence the decision to proceed with repair or rehabilitation.

Routine maintenance events at idle injection wells may occur at the same frequency as for wells that are active.

4.2.2 Non-Routine Maintenance

This section describes the non-routine maintenance activities conducted at the extraction and injection wells. Non-routine maintenance methods are intrusive, requiring removal of existing equipment from the well prior to conducting maintenance. Drop-pipe replacement, submersible pump repair/replacement, and well repair and well rehabilitation are the three types of non-routine maintenance included in this plan. Although the causes of performance losses often differ for extraction wells versus injection wells, well rehabilitation techniques may be the same.

4.2.2.1 Drop-Pipe Inspection and Replacement

Over time, the column pipe in extraction wells and drop-pipes in injection wells can corrode, negatively influencing pumping or injection activities. Column/drop-pipe should be thoroughly inspected for corrosion and damage every time equipment is removed from the well. Corroded or damaged pipe and couplings should be replaced if threads, rings, or seals are damaged by corrosion or fluid abrasion/erosion.

Formation silt and sand, filter pack, and other debris will accumulate at the bottom of the well or sump over time. Anytime the drop-pipe is removed from the well, the total depth of the well should be measured and compared against the well completion diagram depth to determine the amount of debris in the well sump. If more than 30 percent of the sump is filled with debris, the sump should be bailed free of debris prior to reinstallation of the drop-pipe or pump equipment.

4.2.2.2 Submersible Pump Repair and Replacement

The majority of down-hole equipment maintenance needs in extraction wells are associated with the submersible pumps. Over time pump components wear out. Based on site experience, submersible pumps have lasted for 5 to 7 years under normal operating conditions. Conditions that can reduce the life of a submersible pump include: wear to the pump from excessive sand related to the well, a well that is not plumb and straight, blocked or plugged pump intake, improper motor cooling, corrosion, extended cavitation, and poor electricity supply. Diagnosis of the cause of pump problems is outlined in Exhibit 4.2-2.

Most problems that center on the pump require that it be removed from the well for troubleshooting purposes. Submersible pumps may provide some advanced warnings, such as decreased production due to impeller wear and electrical changes (amp draw), but may provide no advance warning of problems, other than failure to operate. However, the pump and electrical system should be tested for function prior to removing the pump. If pump issues cannot be resolved, the pump should be removed and the drop-pipe, pump, intake, motor, and cable should be inspected, then the pump should be tested for function to determine if it needs to be repaired or replaced. Spare submersible pumps will be available for replacement while the removed submersible pump is being tested or repaired.

The diagnoses listed in Exhibit 4.2-2 usually point to an obvious remedy, whether the remedy is to reset a circuit breaker, provide electrical power conditioning, rebuild a pump or motor, or replace.

Inadequate cooling of the pump motor may cause premature failure of the pump. Submersible pumps require sufficient water flow around the motor for cooling; this is achieved by placing the pump above the well screen so that groundwater flow is from the bottom of the pump to the intake (the pump motor is located below the intake), and velocities past the motor are greatest. Although most submersible pumps are set adjacent to a blank section of well casing so that flow is from below the pump, other considerations at some wells may require placement of the pump within the well screen. At these locations a cooling shroud may be placed around the pump to direct the flow from below the pump if there is sufficient space between the pump and the well screen to keep flow velocities within the correct range.

EXHIBIT 4.2-2
Diagnosis of Pump Problems
Groundwater Remedy Operation and Maintenance Manual
Volume 1: Operation and Maintenance Plan
PG&E Topock Compressor Station, Needles, California

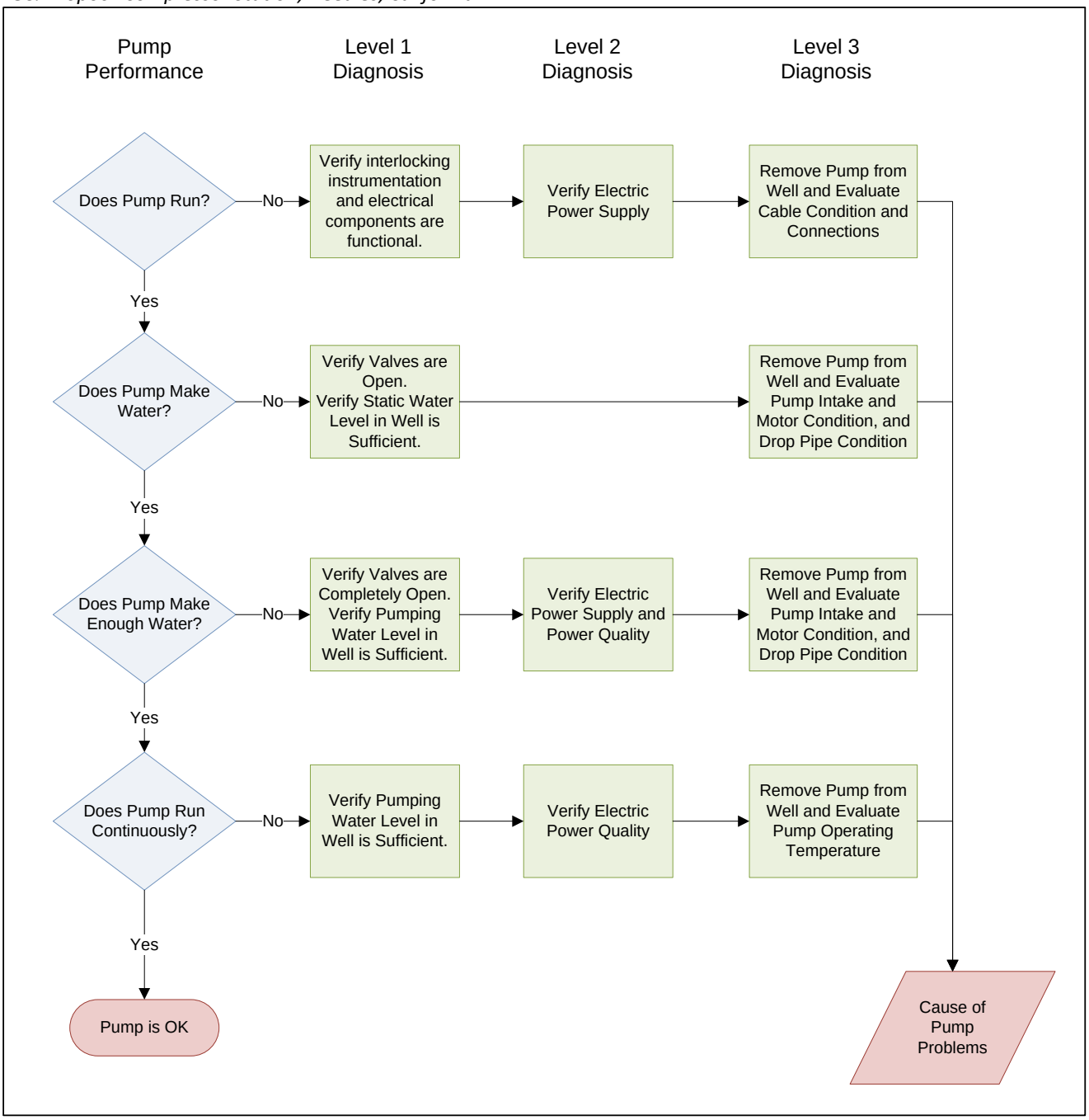

4.2.2.3 Well Rehabilitation

If well performance declines, and routine maintenance proves ineffective, then more extensive measures are required. Well rehabilitation is defined as restoring a well to its most efficient condition by various rehabilitation methods (Driscoll 1986). Experience indicates a large range in the rehabilitation frequency: 1 year to greater than 10 years. When well repair, rehabilitation, and reconstruction cannot restore the well performance to acceptable levels, well decommissioning and new well installation is the final and most costly step. Typical industry well rehabilitation costs are 10 to 20 percent of the costs of a new well. Therefore, time and attention paid to ongoing well maintenance and monitoring is a sound investment.

There are numerous causes of well performance loss. Depending on the plugging or clogging mechanism, the recommended rehabilitation method may vary. Well rehabilitation programs must be tailored to the given well conditions and problems. This plan lists rehabilitation methods that focus on a specific problem. It is thus critical to understand the cause of well performance decline in order to develop a successful rehabilitation program.

Typically, rehabilitation consists of seven basic steps:

1. Diagnosis of Well Problem
2. Pre-Rehabilitation Testing
3. Conditioning
4. Chemical Application
5. Mechanical Agitation and Removal
6. Post-Rehabilitation Testing
7. Wellhead Reassembly

The focus of well rehabilitation is to effectively remove the material that is plugging the well and restore capacity. The general well rehabilitation steps are outlined in more detail in the following sections; however, specific plans for well rehabilitation activities will be prepared at the time rehabilitation is required, as rehabilitation methods must be custom tailored for each well and rehab method.

Some of the necessary equipment needed to conduct well rehabilitation work may include all or some of the following: a pump rig and/or crane, support or pipe truck, generator(s), air compressor, chemical trailer (mixing tanks and pumps), neutralization trailer (mixing tanks and pumps), support truck, video van, vac or tanker truck, forklift, and 20,000-gallon frac tanks. This equipment is similar to what was used during the IM-3 injection well chemical rehabilitation that was completed in fall of 2010. There may be unforeseen or other specialty equipment that is not included in the list above.

4.2.2.3.1 Diagnosis of Well Problems

Before an effective well rehabilitation program can be developed, the cause of well plugging or performance decline can be useful if it is possible to determine. Performance testing and monitoring is far less expensive and labor intensive than down-hole work, and so those methods will be exhausted to help diagnose well problems before implementing more invasive measures. Only after the diagnostic methods are complete should the following non-routine, invasive down-hole diagnostic methods be employed. The non-routine diagnosis of well problems is illustrated in Exhibit 4.2-3.

1. **Drop-Pipe Sampling**. The wellhead should be disassembled and the down-hole equipment removed in preparation for a down-hole video survey. During removal down-hole equipment should be examined for the presence, or lack of, scale and precipitates. Scale deposits on the down-hole piping provide direct evidence of the clogging material. If scale is present on down-hole piping, characteristics should be noted such as color, texture, odor, thickness, grain size, ability to remove from pipe, and reaction to acid. The scale deposited on the drop-pipe should also be photographed. If possible, a sample should be scraped from the piping and compiled and analyzed for the following:

- Physical characteristics: particle size distribution (electronic or visual counter), specific gravity, color, odor, scaling nature and shape, etc.
- Optical microscopy (visual description, microorganisms, crystalline or amorphous matter)
- X-ray diffraction
- Metal analysis (acid digested) – calcium (Ca), iron (Fe), manganese (Mn), chromium (Cr), aluminum (Al), barium (Ba), strontium (Sr)
- Acid insoluble fraction
- Biological analysis

Extra samples should be collected and archived for later analysis. The down-hole piping, pump, and equipment must be cleaned and scale-free prior to reinstallation in well.

If scale is present on the drop pipe but cannot be sampled, a sample of biological scale or encrustation can also be collected from the well casing wall or screen using a scale sampler performed by a well geophysical logging contractor. Samples should be analyzed for the items listed above.

EXHIBIT 4.2-3
Well Problem Diagnosis using Non-Routine Methods
Groundwater Remedy Operation and Maintenance Manual
Volume 1: Operation and Maintenance Plan
PG&E Topock Compressor Station, Needles, California

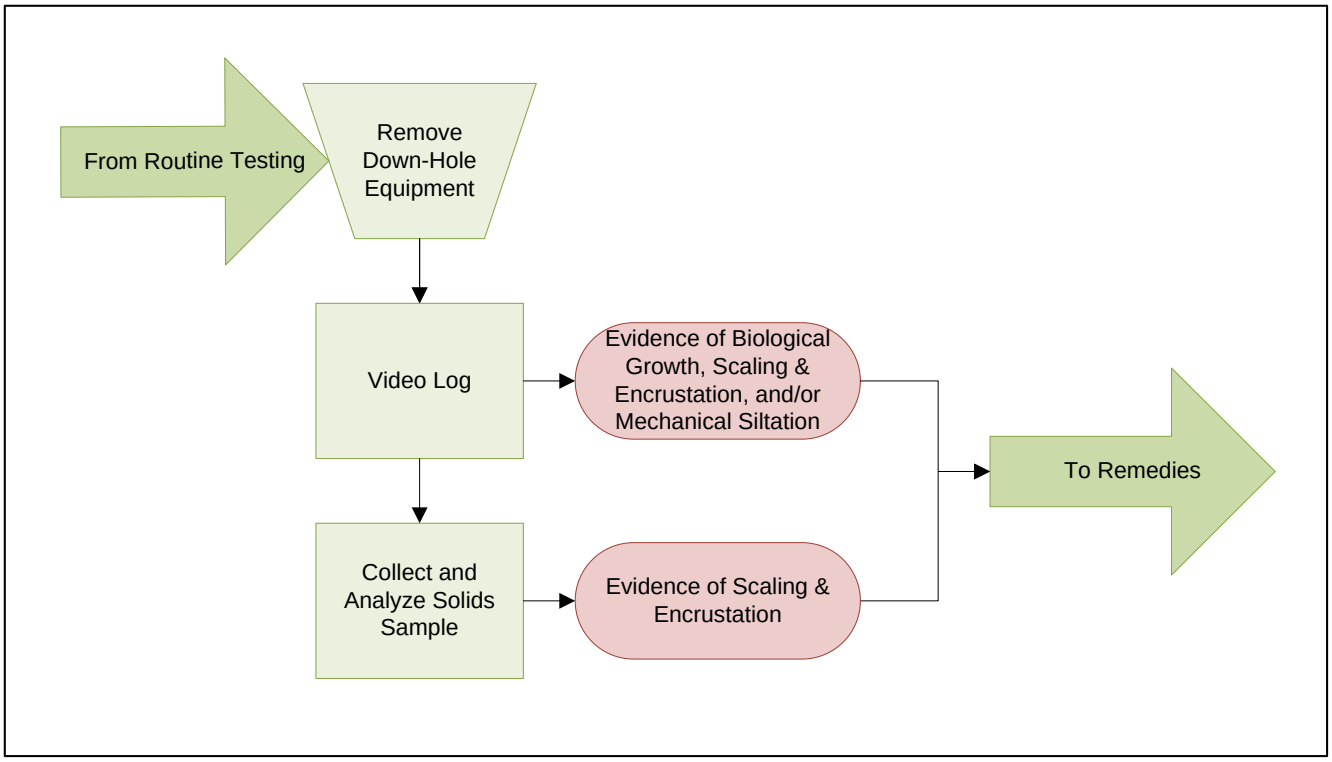

2. **Video Survey**. The video survey results provide visual evidence of well problems. Specifically, this can include the degree and physical characteristics of encrustation deposited on the well screen; the structural condition of the well casing and screen; the extent of corrosion; the volume of sand and debris in the well sump; biological scaling or activity; and the percentage well screen surface area that is blocked. This type of information should be used to support well problem diagnosis.

   The video survey should be conducted using a color camera capable of side-scanning and photography plus video recording of the survey so that it can be viewed later. The video survey will also be encoded with depth. A video survey will be conducted before and after rehabilitation to evaluate the success of the rehabilitation program.

3. **Flow Logging and Aquifer Testing.** Flow logging is used to measure the contribution of groundwater to the well from various depth intervals of well screen. Baseline flow logging results are required for comparison and to understand the specific intervals or depths of well screen where clogging has occurred. Based on these results, well rehabilitation can focus on discrete clogging intervals.

A step-rate discharge aquifer test should be conducted so that the efficiency of the well can be evaluated. The test should include at least three steps, at recommended flow rates of 50, 100, and 150 percent of the design discharge or injection rate.

Borehole flow logging and aquifer testing will be completed before and after rehabilitation to assess the success of the rehabilitation program.

When the cause of well problems has been evaluated, a plan will be developed to remedy the causes. A summary of recommended actions, based on the cause of performance loss, is included in Exhibit 4.2-4. Details of the remedies are included in the following sections.

EXHIBIT 4.2-4
Performance Loss Remedies
Groundwater Remedy Operation and Maintenance Manual
Volume 1: Operation and Maintenance Plan
PG&E Topock Compressor Station, Needles, California

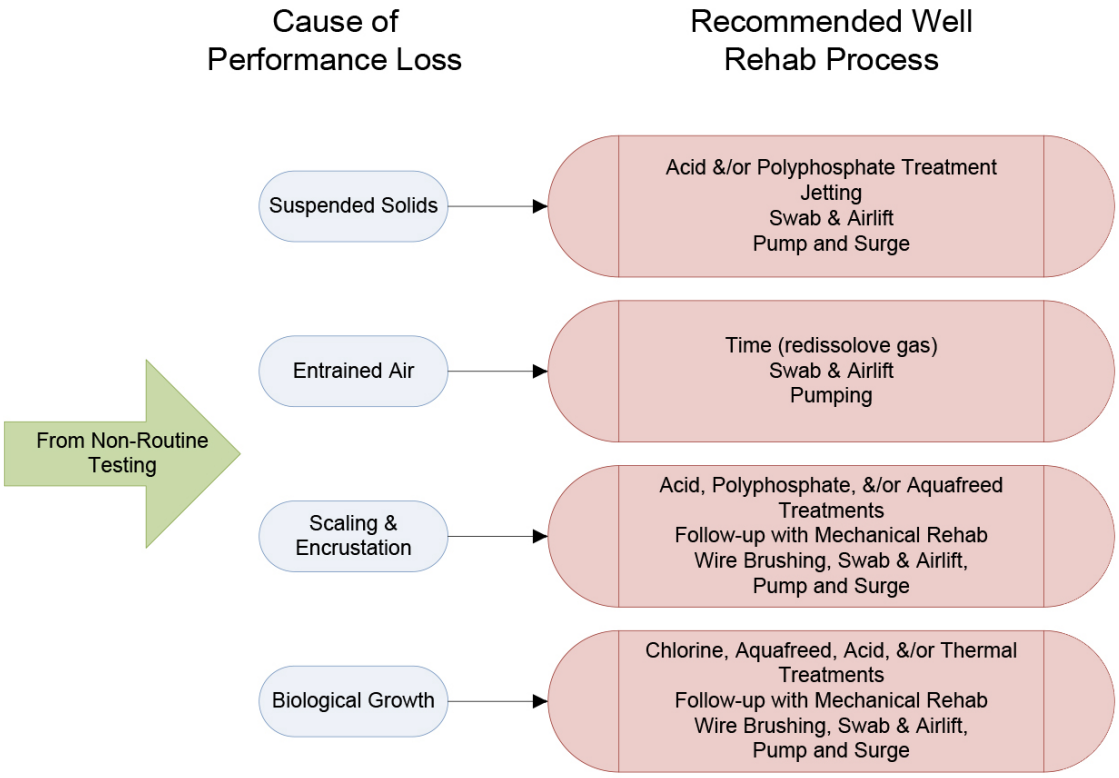

4.2.2.3.2 Conditioning

The purpose of conditioning is to remove loosened material from the well casing and screen, readying these surfaces for more aggressive rehabilitation measures. Conditioning reduces the consumption of chemicals which helps the chemicals reach a greater radius of influence from the well. The most common way to accomplish this is by wire brushing the well casing and screen followed by bailing the material from the well sump. These and other methods are described below.

Wire Brushing. Removes scale and deposits on the inside of the well screen and casing. The diameter of the wire brush should be greater than the inner diameter of the well casing by roughly ¼ to ½ inch.

Surging. Use of a single swab or dual surge block swab may be used to surge the well prior to chemical application to remove loose deposits and to “prepare” the gravel pack and formation.

Air Impact Gun. Use of down-hole tools that fire compressed gas as the tool is lowered down the well. This method is more effective at removing soft scale deposits such as bacteria or algae than wire charge devices.

Nitrogen is the most common gas utilized for air impact guns. Air impact gun methods are also often used as an agitating mechanism after application of chemicals and additives. Air impact gun methods are known to be currently available through the following licensed dealers:

- Boreblast II™, Registered Dealer: Layne Christensen Company, Fontana, CA
- Hydropuls®, Sole Licensee: Kleinfelder, Redmond, WA
- AirBurst®, Sole Licensee: Frazier Industries, Inc, Muskego, WI

Bailing. Bailing is the last step of conditioning to remove material that was brushed or blasted off the inner well casing and screen. A suction type bailer capable of removing sand and gravel from the well sump should be used. The well sump should be bailed free of sediment and debris before any chemical application is performed.

4.2.2.3.3 Chemical Application

If it has been determined during well diagnosis that a chemical application is required as part of the rehabilitation program, then the next step after conditioning is the application of chemicals. As the conditioning step targets cleaning the inside of the well, the chemical application step is designed to penetrate outside of the well into the filter pack and aquifer and to detach or dissolve the plugging material from those surfaces of the filter pack and aquifer formation. Chemical applications including the selection of chemicals and their concentrations must be tailored for each specific problem or well. However, the basic chemical application steps are as follows:

1. **Volume.** The volume of the chemical to be applied during the chemical application typically involves three times the saturated well casing and borehole volume to ensure sufficient penetration into the filter pack and aquifer formation. The volume of the well casing is determined using the well inside diameter, static depth to water and total depth of well. The volume of the borehole is determined using the borehole diameter, static depth to water, total depth of borehole, and 30 percent gravel pack porosity, minus the well casing volume previously calculated.
2. **Concentration.** The concentration of the chemical will vary for different rehabilitation programs, but needs to be considered prior to chemical application. Manufacturer specifications and expert recommendations are typically used to determine the concentrations applied in specific cases.
3. **Mixing.** Chemicals must be premixed (diluted) at the wellhead prior to injection. Chemicals should never be injected in their concentrated form as the chemistry concentrations will vary greatly inside the well.
4. **Injection.** The best practice for chemical injection into wells with long screens (e.g., screens 50 feet long or longer) is the use of an isolation tool that is typically 15 to 20 feet in length. When an isolation tool is not used, chemicals should be added through a tremie pipe from the well head. Using these methods, a batch of mixed chemical is injected at a specific depth interval. The tool/tremie pipe is lowered (or raised) so that the entire length of the well screen is injected or treated with the chemical. The volume of each batch injected into a specific zone should be calculated by dividing the number of batches by the volume calculated in Step 1 (equal volume per each injection zone).
5. **Agitation.** Once the entire interval of well screen has been treated with chemical, the well should be lightly agitated over the entire depth of the well screen. “Lightly agitated” is considered to be approximately 5 to 10 minutes per each well screen interval. Several agitation methods exist, but swabbing is the best choice for this step. Acceptable tools include a single swab, a dual swab (surge block), or the isolation tool that is used during injection. An isolation tool capable of airlifting (or pumping) while simultaneously swabbing the well screen is valuable as it can be used for chemical injection, chemical agitation, and mechanical agitation.
6. **Contact Time.** After chemical injection and agitation is complete, it is important to allow the chemical to have contact time with the filter pack and formation so that it can detach and dissolve the plugging material. In most cases, the chemical mixing, injection, and agitation steps utilize the majority of the day, thus allowing the chemicals contact time overnight. Typically, approximately 12 to 24 hours is provided for chemical contact time.

7. **Removal.** Mechanical agitation and removal of solids always follows chemical application. Any unexpended chemicals in the wells will be removed during the mechanical rehabilitation processes.

4.2.2.3.4 Selection of Chemicals

The selection of chemicals and their concentrations must be tailored for each specific problem or well (see Well-SOP-07, Well Rehabilitation Bench Testing). Numerous chemicals and additives are available for rehabilitation applications. For example, at a similar groundwater remediation project at the PG&E Hinkley Compressor Station, hydrochloric acid was initially used for IRZ well cleaning and resulted in well screen corrosion. To date a phosphoric acid (NuWell 120) and a biodispersant (NuWell 310) have been used with success on IRZ, clean water injection, and extraction wells. A variety of materials comprise the various well screens at the Hinkley site including low-carbon steel, copper-bearing mild steel, and stainless steel. No corrosion has been detected in Hinkley wells during post-chemical cleaning video logging since the use of hydrochloric acid for well cleaning was discontinued. Similarly, variables specific to the Topock site such as groundwater chemistry, pre-injection amendment chemicals, and well construction materials must be considered when selecting the appropriate chemical(s).

Available chemicals for well rehabilitation are categorized under the following types: Inorganic acids, organic acids, Bases, disinfectants, oxidants, reductants, corrosion inhibitors, surfactants, dispersants, wetting agents, chelating agents, and enhancers. A summary of available chemicals that are anticipated to be most applicable to the Topock site are listed in Exhibit 4.2-5. Other chemicals may be used during well maintenance events but are not listed in Exhibit 4.2-5, including sodium chloride and sodium hydroxide.

Acids are discussed in more detail due to the large selection of chemical products, which are classified as either inorganic or organic acids. Acids commonly used in well cleaning applications include the following:

Inorganic Acids:

- Hydrochloric or muriatic acid (HCl)
- Sulfuric acid (H_2SO_4)
- Sulfamic acid (H_3NSO_4)
- Phosphoric acid (H_3PO_4)

Organic Acids:

- Hydroxyacetic or glycolic acid ($C_2H_4O_3$)
- Citric acid ($C_6H_8O_7$)
- Ascorbic acid ($C_6H_8O_6$)

Inorganic Acids

- **Hydrochloric acid** is an inorganic acid effective at removing hard mineral scale deposited on the filter pack and aquifer formation particles. Hydrochloric acid has the longest history of use as a chemical used for well rehabilitation applications and is very effective for several applications. As it is corrosive, hydrochloric acid must be used with an inhibitor, such as QC-21 or Rodine 103NPF, that minimizes its corrosive effect. Hydrochloric acid is typically available in a liquid form that is 32 percent acid, which should be diluted to 8 to 15 percent for well rehabilitation.

- **Sulfuric acid** is an inorganic acid that is a good alternative for HCl because it is less corrosive, but sulfuric acid is not as strong as HCl.

- **Sulfamic acid** is an inorganic acid effective at dissolving calcium and magnesium carbonate but has little ability to dissolve iron and manganese deposits. Sulfamic acid is often selected over hydrochloric because it is less corrosive. Corrosion inhibitors should still be mixed with the acid solution. Sulfamic acid is typically available in powder or pellet form and should be mixed to 8 to 15 percent for well application. Sulfamic should not be confused with sulfuric acid.

  Phosphoric acid has no particular advantage over other acids in the ability to dissolve iron and manganese compounds except for sulfate salt removal (Smith 2007). Reactions associated with phosphoric acid are slow, so the contact time during rehabilitation will need to be greater than with HCl (12 to 24 hours). Phosphoric acid is less corrosive to metals than hydrochloric acid and provides some passivation of metal surfaces resulting in future corrosion protection. Phosphoric acid is safer to handle since it does not have the

EXHIBIT 4.2-5

Summary of Available Chemicals for Well Rehabilitation Applications

Groundwater Remedy Operation and Maintenance Manual
Volume 1: Operation and Maintenance Plan
PG&E Topock Compressor Station, Needles, California

Chemical or Product	Chemical Formula	Primary, Secondary, Additive?	Chemical Type	Purpose	Notes
Hydrochloric Acid	HCl	Primary	Inorganic Acid	Geochemical scale and inorganic metal oxide scale	Also called muriatic. Highly corrosive - must use inhibitors. Do not mix with chlorine.
Sulfamic Acid	H_3NSO_4			Ca and Mg carbonate	Also an acid enhancer for acetic acid
Sulfuric Acid	H_2SO_4			Geochemical scale or encrustation	Less corrosive than HCl (not typically used)
Phosphoric Acid	H_3PO_4			Metal and mineral hydroxides, sulfate salts	Often used with biological dispersant
Hydroxyacetic Acid	$C_2H_4O_3$	Secondary	Organic Acid	Biofouling and disinfecting	Also called glycolic acid, often mixed with HCl
Acetic Acid	CH_3COOH			Biofouling	Acidizing to pH<2 with sulfamic acid recommended.
Citric Acid	$C_6H_8O_7$			Dissolves iron deposits, disperse biofilms	Useful as chelating agent
Oxalic Acid	$C_2O_4H_2$	Primary or Secondary		Reductant and chelating agent. Effective as primary acidizer in low-Ca water, removes iron	Reductant. Can form insoluble scale if Ca > 125 ppm in water.
Ascorbic Acid	$C_6H_8O_6$			Iron and manganese scale	Reductant
Hydrogen Peroxide	H_2O_2	Secondary	Disinfectant/Oxidant	Biofouling and disinfecting	Often mixed with HCl
Sodium Hypochlorite	NaOCl	Primary		Biofouling and disinfecting, sulfide removal	Used for "shock chlorination". Use of chlorine based products result in the formation of trihalomethanes
Chlorine Dioxide	ClO_2			Biofouling and disinfecting	Common disinfectant in drinking water
Potassium Hydroxide	KOH		Base	Shocking microorganisms that have previously been treated with acids.	Extremely corrosive, do not add to acids
Polyphosphate	NA	Additive	Polymer	Disperses dislodged scale	Use only phosphate free polymers
Aqua Clear™ PFD	NA		Dispersant	Disperses mud, sediment and clay	Phosphate free dispersant
Rodine-103/ Rodine-213	NA		Corrosion inhibitor	Protects against corrosion	Additive needed for some acids
QC-21	NA		Corrosion inhibitor/Surfactant	Biological slime dispersion and disinfectant	Should be mixed with other acids. Mainly for corrosion protection.
CB4	NA		Wetting agent	Helps get chemicals further into formation	Often used in Blended Chemical Heat R
Nitrogen	N	Other	Compressed gas	Dislodges and detaches deposits as compressed gas is fired into well.	Driver of air impact guns
Carbon Dioxide	CO_2	Other	Cryogen (solid, liquid or gas)	Dislodges and detaches deposits during phase change	Cryogenic - freeze thaw.

Note:
NA = Not available

dangerous hydrochloric acid fumes and is much less corrosive to eyes and tissue. Phosphoric acid should be used with a polymeric biodispersant to limit the formation of phosphate and the possible resulting bacterial stimulus. But, phosphoric acids have the potential to provide nutrients for biological regrowth and this should therefore be considered during rehabilitation planning.

Organic Acids

- **Hydroxyacetic acid, or glycolic acid,** works best to disperse biological slime and as a disinfectant. Hydroxyacetic acid is best to use if iron-related bacteria have been identified as a problem, as this acid will directly attack iron bacteria. Hydroxyacetic acid is a weak organic acid, and thus is relatively non-corrosive, but requires much more contact time (typically, 12 to 24 hours) during rehabilitation as its reaction is slow (roughly 0.8 billion times slower than HCl [Mansuy 1999]). Hydroxyacetic acid comes in both powder and liquid form.
- **Citric acid** is an organic acid that is very soluble in HCl and can be used with HCl to improve solubility of phosphates and iron deposits. Solutions of citric acid will support bacterial growth. In general, citric acid is weak and should always be used with a stronger mineral acid.
- **Ascorbic acid** is an organic acid that is effective at dissolving iron and manganese oxides. Dissolution occurs as the chemical acts as a reductant that transforms insoluble metal oxide species into more soluble reduced species (Houben and Treskatis 2007).

Commercially Available Products

Many commercial brand name products for well cleaning and rehabilitation are sold as a mix of the chemicals listed in this plan, such as an acid and a corrosion inhibitor. Some examples of these products include: Aqua-Clear AE (glycolic acid), Aqua-Clear MGA (sulfamic acid/sodium chloride), NuWell® 120 (phosphoric acid), NuWell® 310 (bioacid dispersant), NuWell® 400 (non-Ionic surfactant), Tolcide®(biocides to inhibit microbial growth), BETZMPH500 (citric acid: chelating agents), Rodine 103NPF (corrosion inhibitor), etc. These are just examples of some commercial names and mixtures. As new products are developed and chemical companies emerge, more options will become available, so there may be products not listed in this plan that will be utilized for well maintenance at Topock; however, the product should consist of chemicals listed in this plan.

Many of the above listed commercial mixtures, including Aqua-Clear AE, Aqua-Clear MGA, NuWell® 120, NuWell® 310, NuWell® 400, and BETZMPH500, are certified under the specifications of National Science Foundation/ American National Standards Institute (NSF/ANSI) 60-2005 (Drinking Water Treatment Chemicals –Health Effects). The NSF/ANSI 60-2005 certified compounds listed above are routinely used for rehabilitation of drinking water wells in California under the California Waterworks Standard (California Code of Regulations Title 22, Section 64590: Direct Additives). Additional chemicals that are not listed here, but with similar properties or certifications, may also be used for rehabilitation.

4.2.2.3.5 Mechanical Agitation and Chemical Removal

Mechanical redevelopment is the agitation and removal of dislodged, detached, and dissolved deposits. Effective agitation followed by removal is the most important step for any rehabilitation program. The greater the hydraulic energy induced in the well during agitation, the greater the radius of influence will be, resulting in a more effective rehabilitation.

If during the diagnosis step it is determined that chemical application is not required as part of the rehabilitation program, then the sequence of rehabilitation activities will be conditioning followed by mechanical agitation and removal.

Mechanical agitation involves the concentration of energy on discrete intervals of the well screen so that the energy is transmitted in all directions away from the well and transferred into the filter pack and formation. Groundwater is the vehicle used to transfer energy away from the well during mechanical agitation and to then transport the dislodged/dissolved deposits from the filter pack and formation to the well for removal.

Typically, approximately 2 to 6 days should be spent conducting mechanical agitation and removal activities during rehabilitation, although rehabilitation programs will vary for each well depending on its depth and condition and must be specific to the problems diagnosed and to the well's response during rehabilitation. Mechanical agitation and removal should continue if it is apparent that material is being removed from the well and the capacity is improving enough to justify the cost.

There are several tools and methods used to achieve mechanical agitation. Mechanical agitation and removal techniques can involve swabbing, jetting, surging, and pumping. The best, proven techniques are those where both agitation and removal are achieved simultaneously, thus eliminating one step. If adequate submergence exists, surge block with airlifting is a very effective and efficient method. Regardless of the selected mechanical agitation technique, pumping and surging should always be conducted as the final step during mechanical agitation and removal. Hence, surge block with airlifting (or pumping) followed by pumping and surging is a sensible approach for agitation and removal. Each agitation and removal method is described below.

Swabbing (agitation). Agitation involves aggressively raising and lowering the swab tool in the well screen interval, creating a plunger effect. As the swab is raised and lowered, extreme pressure differences occur above and below the swab. The pressure difference will depend on whether the tool is being raised or lowered. Swabbing is one of the best agitation procedures to detach deposits from the filter pack and formation and move them into the well. Swabbing alone must be followed by a removal or pumping method such as air lifting and bailing.

A swab consists of a rubber disc sandwiched between two metal discs. The swab (or set of cleaning discs) is attached to rigid pipe. Swabbing tools can consist of either a single or double swab.

Air-Lift Pumping (removal). Air-lift pumping utilizes compressed air to lift water from the well. Air lift pumping is essentially the same process described in the injection well routine maintenance section as backwashing. In this method, an eductor pipe (discharge drop-pipe) and an air line are used to perform pumping where the bottom of the eductor pipe is open-ended and installed to a depth where pumping will occur. The airline is often installed inside the eductor pipe some distance above the bottom of the pipe. The larger the eductor pipe and airline diameter, the greater the pumping rate will be during airlifting.

Jetting (agitation and removal). Jetting involves a pipe equipped with nozzles into the well screen and injecting a high velocity horizontal stream of water through the pipe into the screen openings. The high-energy jet of water agitates and rearranges the filter pack, loosening debris. Typically a submersible pump is incorporated into the jetting assembly to extract the injected water and maintain the static water level, however; alternate removal methods (i.e. air lifting, centrifugal pump) are acceptable. The jets are moved vertically along the screened interval and rotated, if needed, to effectively address the entire screen surface area. Typical jetting tools have two to four nozzles; however site conditions and well diameter will ultimately dictate the number of nozzles.

Surge Block with Air-Lift Pumping (agitation and removal). The surge block with air-lift pumping (SBAP) tool is a combination of the dual swab tool (surge block or isolation tool) and airlift pumping (both described in this section). SBAP is very effective as both agitation and removal occur simultaneously. Proper airlift design is outlined in the airlift pumping section and should be followed when conducting SBAP activities.

During SBAP, the length of the zone interval is calculated and divided by the screen length to determine the total number of zone intervals required to treat or agitate:

$$\text{Zone Interval (ft)} = \text{bottom of tool at the downstroke} - \text{top of tool at the upstroke}$$

SBAP activity will be focused at one zone interval at a time starting with the shallowest zone and working downward. Agitation is created by aggressively raising and lowering the tool while simultaneously airlift pumping, followed by airlifting pumping without agitation, typically this can be achieved using a spudder rig, or a rig that is capable of spudder. During SBAP activities, the water color, turbidity, and sediment concentration should be measured and recorded after every agitation/air-lift pump cycle.

Turbid and/or discolored discharge water means that material is being dislodged and removed from the well. Clear discharge water after aggressive agitation indicates that the energy level is too low to dislodge and remove additional material, or it may be that the zone has been cleaned and activities should be focused on the next zone. As a rule of thumb if turbid and/or discolored discharged water is being generated, then progress is being made and should continue until the water becomes clear.

Prior to and during SBAP, the depth of debris in the sump should be evaluated and removed by bailing if needed.

Pumping and Surging (agitation and removal). Pumping and surging activities should be conducted once the other agitation and removal methods described above are completed and the well is relatively clean. Surging causes flow reversals through the filter pack that will agitate, dislodge, and rearrange the formation particles and help break down sediment bridging in the formation. Pumping and surging is effective at removing fine material from the filter pack and formation and is the polishing stage of development or rehabilitation.

A test pump capable of over-pumping the well by 150 to 200 percent of the design rate should be installed in the well next to a blank section of well screen (preferably located in a section of casing where the screen is located above and below the blank casing). The test pump should not have a foot valve so that during pumping and surging, as the pump is cycled on and off, the water rushes in and out of the well screen at high discharge rates.

In surging, the pump is rapidly cycled on and off to produce agitation. The pump should only be run long enough to fill the drop-pipe and it is suggested that a sample port on the temporary wellhead be left open to indicate when water has reached the surface. When the drop-pipe is full, the pump is shut off, permitting the water to fall back into the well and the surrounding annular and aquifer materials. Surging should be repeated 5 to 10 times before pumping. After surging, the pump is run at a constant rate of 150 to 200 percent of the design rate of the well for 5 minutes to remove dislodged material.

The surging and pumping is done several times over the course of one or two days or until the specific capacity stops increasing. It is critical that at the end of each pumping cycle, the pumping rate, drawdown, sand content, and water color be recorded to monitor progress.

Bailing (removal). Removal of material from the bottom of the well by bailing should occur at the end of several rehabilitation steps: conditioning, surge block and airlift pumping, and surging and pumping. Bailing should always be the last step in the rehabilitation program before post-rehabilitation testing begins. A suction type bailer capable of removing sand and gravel from the well sump should be used.

4.2.2.3.6 Post-Rehabilitation Testing

Once pumping and surging activities are complete post-rehabilitation testing should be conducted to evaluate the success of the rehabilitation activities. Flow logging, step-rate discharge aquifer testing, and video surveying are types of tests that are useful for this assessment. Aquifer testing should be conducted at the same discharge rates and duration as the test conducted during the well problem diagnosis step. If a post-rehabilitation video survey is conducted, all equipment should be removed from the well and debris that may have accumulated in the sump should be removed prior to implementation.

Once post-rehabilitation testing is complete, a decision must be made whether the well should be returned to service or if additional efforts should be attempted to further rehabilitate the well. If the rehabilitation efforts are deemed successful, then the wellhead should be reassembled and the well returned to service.

Rarely does the capacity of a well return to its baseline value after rehabilitation efforts, as it is nearly impossible to completely remove the plugging material and fouling mechanism from the filter pack and aquifer formation. Nonetheless, an intuitive definition of a successful well rehabilitation program is one that returns the well capacity to its original value (100 percent). Well rehabilitation expectations must be managed so that realistic and reachable goals are established before rehabilitation efforts begin. As an example, if a well is rehabilitated after losing 25 percent of its original specific capacity and 15 percent is regained after rehabilitation efforts (to achieve 90 percent of the original capacity), then the rehab should be considered effective or successful. Well performance sustainability is another factor that should be evaluated to understand the effectiveness of well

rehabilitation, but this can't be done until the well is returned to service and several months of performance data are available.

Irreversible damage to the filter pack and aquifer formation may occur in wells that have experienced significant loss in well capacity (30 percent or more). While the original capacity may never be restored, experience with multiple wells at other sites suggests that successful rehabilitation can often restore roughly 75 percent of the baseline value. Consequently, it is important that actions be taken to rehabilitate wells during the early stages of plugging and fouling to reduce rehabilitation costs and improve rehabilitation results.

4.2.2.3.7 Wellhead Reassembly

Once it is determined that the well should be returned to operation, the down-hole equipment should be reinstalled in the well and the wellhead reassembled. Before installing equipment in the well, it is important to confirm that the well sump is free of debris. If it is determined that debris exists in the sump, the well should be bailed prior to installing any equipment. Once the down-hole equipment is installed, the wellhead, supply line, and instrumentation should be reassembled. Instrumentation measurements should be confirmed through the collection of manual measurements when possible to confirm functionality. Following complete reassembly, the well should be tested for approximately an hour to verify that it will function properly under normal operating conditions.

4.2.2.3.8 Other Rehabilitation Techniques

In addition to the rehabilitation process and methods discussed above in this section, other techniques may be considered based on a given well problem scenario. Advances in well rehabilitation methods provide additional techniques that that can be added to the well rehabilitation toolbox. All methods described in this section require that conventional well rehabilitation techniques (mechanical agitation and removal) be performed in conjunction with these methods. These methods are briefly described in this section and include the following:

Aqua Freed™. The Aqua Freed™ method is similar to Aqua Gard™, but requires removal of in-well equipment. The method uses cryogenic liquid carbon dioxide that dislodges and detaches filter pack and formation deposits through freeze-thaw, gas expansion, and the formation of carbonic acid during well rehabilitation. Conventional mechanical rehabilitation must be conducted before (conditioning) and after application (agitation and removal). No other chemicals are necessary, but adding a chemical application step is an option.

Wire Charge Devices. Detonation of a charged wire in the well produces mild shockwaves that loosen hardened deposits from the well casing and screen. Wire charge devices are known to be currently available through the following licensed dealers:

- Sonar-Jet™, Registered Dealer: Thompson Drilling, Moses Lake, WA
- Ener-Jet, Sole Licensee: Welenco, Bakersfield, CA

Blended Chemical Heat Treatment (BCHT). The BCHT method utilizes heat augmentation with a chemical mixture that involves three phases of application to shock, disrupt, and disperse (Alford and Cullimore 1998). The shock phase usually involves a water-jet injection of a tailored chemical mixture that is often a mix of acetic or glycolic acid and surfactants. The disruption phase is similar to the shock phase, but instead application is often with an inorganic chemical mixture such as hydrochloric acid and a corrosion inhibitor. During both phases of rehab, the chemical mixture is heated to 100 to 200°F. The first phase is intended to shock the bacteria and biofilms, the second to disrupt the biofilm, and the third to disperse or detach the biofilms from the well surfaces.

A simpler version of this method, which uses strong acidic and caustic chemical mixtures, is referred to as "ultra acid-base (UAB)" (Smith 2007).

Suction Flow Control Device (SFCD). This device is installed in pumping wells as a preventative measure, counteracting uneven groundwater flow from the formation and filter pack into the well (uneven well inflow). In any well, the pump represents the lowest pressure point in the aquifer affected by the well. In most scenarios where the pump is situated in the casing above the screen, almost all flow enters through the top 10 to 15 percent of the screen (Pelzer and Smith 1990). If the pump is situated in the screen, flow through the screen

occurs predominantly near the pump and can result in actual inflow velocities that are higher than the inflow velocities calculated using the Driscoll method. As a result, this can cause filter pack erosion induced in the high-velocity zone during well operation, which leads to sand pumping and increased filter pack plugging (Smith 2007). By using a SFCD device the path of water entering the pump is modified and the tendency of plugging near the pump intake is reduced. Aquastream, Inc. designs and fabricates SFCD systems.

4.2.2.4 Well Casing Repair

Extraction and injection wells may require repairs to maintain their structural integrity as they age. Common problems include holes in the well casing due to construction flaws, material failure, and/or extensive casing corrosion. Holes in well casing lend themselves to localized repairs, whereas the latter is best addressed with a complete re-line. Wells that have a hole in the well casing or screen are susceptible to excessive sand production. A hole or structural flaw is observed by use of a video log survey, which is typically prompted by the sand production. Because well repairs are site- or well-specific, general well repair methods are listed below.

Patching. A patch can be used to block a hole or gap in the well casing or damaged well screen. The need for a patch and the location is evaluated with a video survey. The patch may consist of a thin wall stainless steel tube with a vulcanized-rubber outer cover. The patch is swaged in place using a high-pressure inflatable packer or hydraulic swaging tool. Then the swaging tool is expanded until the thin wall tube yields, permanently swaging the outer rubber cover into a sealing contact with the original surrounding casing. The swaging tool is removed, and the inside well diameter is roughly equal to the original inside well casing diameter.

Relining. Relining methods are used when it is determined that more extensive structural problems exist, versus a localized hole or damage. Relining may consist of a long sequence of collars or sleeves swaged in place, or may entail building a complete new well within the existing well. Several relining methods exist that use inflatable packers and swaging tools to insert gravel pack liners (within well screen) and annular grouting (above well screen). Some features of the old well casing that may hamper the insertion of a liner include rough surfaces, insufficient well straightness or plumbness, and protrusions. Metal compatibly must be considered for metal liners so that corrosion related to dissimilar metals does not occur.

Reconstruction. A complete reconstruction of the well may be needed if damage is too extensive to remedy with patching or relining. Reconstruction will entail the removal of the old well casing and screen to permit the reuse of above-ground system components. During reconstruction the old well materials should be removed, the borehole should be reamed to a diameter sufficient to remove scale buildup in the old annular materials and aquifer materials, and the well should be reconstructed as determined appropriate. Reconstruction is typically only practicable for smaller diameter wells than can be effectively over-drilled.

4.2.2.5 Well Replacement

Wells that cannot be restored to a condition that is satisfactory to fulfill the given well objective using the routine or non-routine maintenance methods defined above may require replacement. Well replacement entails the construction of a new well within a new borehole, and should be considered as the least desirable option to achieve the given objective of a well. The location of replacement wells will be determined based on the evaluation of available remediation system performance data (e.g., current hydraulic gradient and water quality data, as well as model predictions), accessibility, and agency-approved work plans and compliance documents. If it is determined after further evaluation and discussions with agencies that a replacement well is warranted and that the most suitable location to achieve the well objective is within the area of the original well location, well replacement will proceed under the scope of this O&M Plan. The well that is being replaced may require decommissioning as presented in Section 4.3.

4.2.3 Well Maintenance Frequency

The estimated initial routine and non-routine maintenance frequency for each activity is summarized in Exhibit 4.2-6. The frequency of routine and non-routine maintenance events may vary from well to well, as one well may require more frequent backwashing or rehabilitation compared to another well. Further, routine and

non-routine maintenance frequencies will need to be refined as the system is operated. In general, as well performance declines, the well maintenance activities required to restore well health becomes more aggressive.

EXHIBIT 4.2-6
Estimated Frequency for Maintenance Activities
Groundwater Remedy Operation and Maintenance Manual
Volume 1: Operation and Maintenance Plan
PG&E Topock Compressor Station, Needles, California

Maintenance Activity	Routine Maintenance	Non-Routine Maintenance	Extraction Wells Frequency [a]	Injection Wells Frequency	IRZ Injection Wells Frequency	Monitoring Wells Frequency [a]
Well Health						
Pump and Surge Event	X		As needed			
Backwash Event	X			3 to 7 days	3 to 7 days	
Aqua Gard™	X		6 months to 1.5 years	3 months to 1 year	TBD	
Well Rehabilitation		X	3 to 5 years	1 year	6 months to 1.5 years [b]	As Needed
Well Reconstruction		X				As Needed
Well Replacement		X	50 years	50 years	50 years	As Needed
Down-Hole Equipment						
Drop-Pipe Inspection and Replacement		X	5 to 7 years	5 to 7 years	5 to 7 years	
Pump Inspection, Repair, and Replacement		X	5 to 7 years	5 to 7 years	5 to 7 years	
Well Repair		X	As Needed	As Needed	As Needed	As Needed

Notes:

[a] Extraction wells are not considered to be good candidates for reconstruction due to their smaller borehole diameter. Monitoring wells are generally not anticipated to need replacement or reconstruction.

[b] The initially planned schedule for site IRZ injection wells is 6 months of operation followed by 18 months of non-operation. IRZ wells will be rehabilitated during the 18-month rest periods, unless backwashing fails to maintain well performance. In those cases, wells may be rehabilitated at a greater frequency during the 6-month operating period. The IRZ injection wells may be backwashed on a less frequent basis while they are not in service (i.e., during the 18-month off cycle).

Based on the estimated maintenance frequency outlined in Exhibit 4.2-6, the estimated number of times a maintenance activity will occur during each year and throughout the duration of the groundwater remediation activities are displayed in Exhibits 4.2-7 (for injection wells) and 4.2-8 (for extraction wells). These exhibits are conceptual and illustrate well maintenance frequency using pyramid diagrams where the activities near the top of the pyramid are more aggressive and occur less often than the activities at the bottom.

EXHIBIT 4.2-7
Conceptual Injection Well Maintenance Frequency Pyramid
Groundwater Remedy Operation and Maintenance Manual
Volume 1: Operation and Maintenance Plan
PG&E Topock Compressor Station, Needles, California

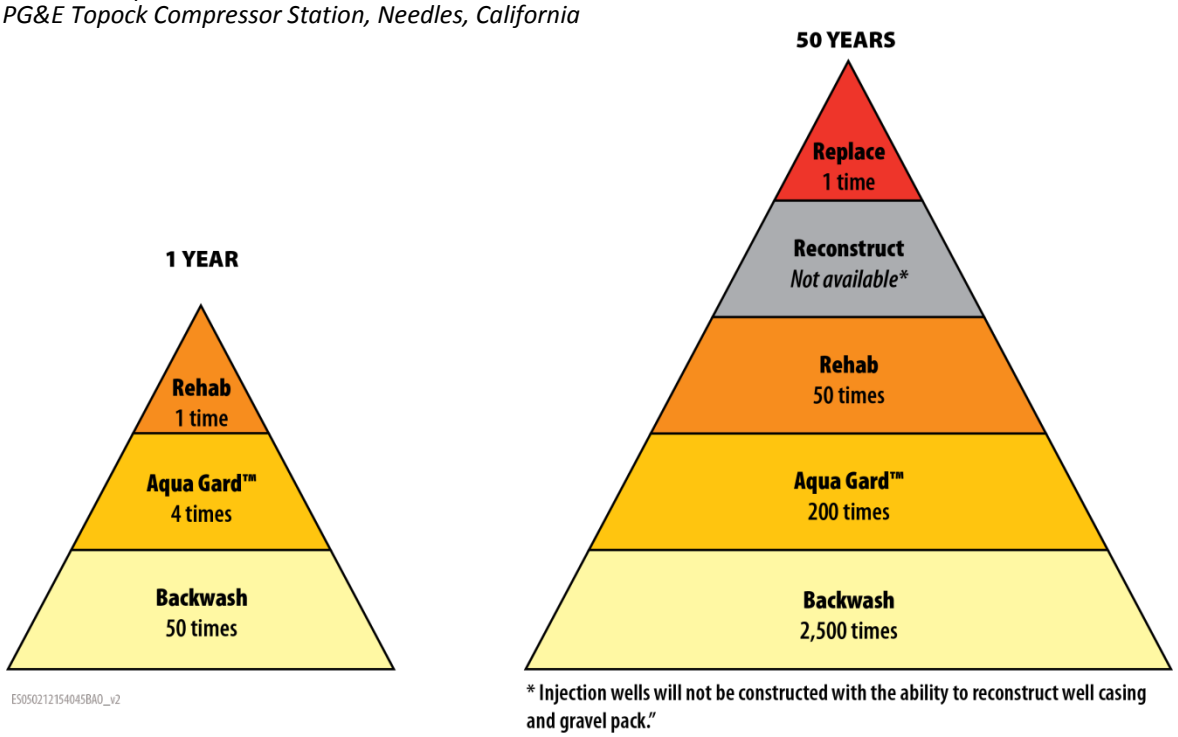

Note: Injection wells are not considered to be good candidates for reconstruction due to their larger borehole diameter.

EXHIBIT 4.2-8
Conceptual Extraction Well Maintenance Frequency Pyramid
Groundwater Remedy Operation and Maintenance Manual
Volume 1: Operation and Maintenance Plan
PG&E Topock Compressor Station, Needles, California

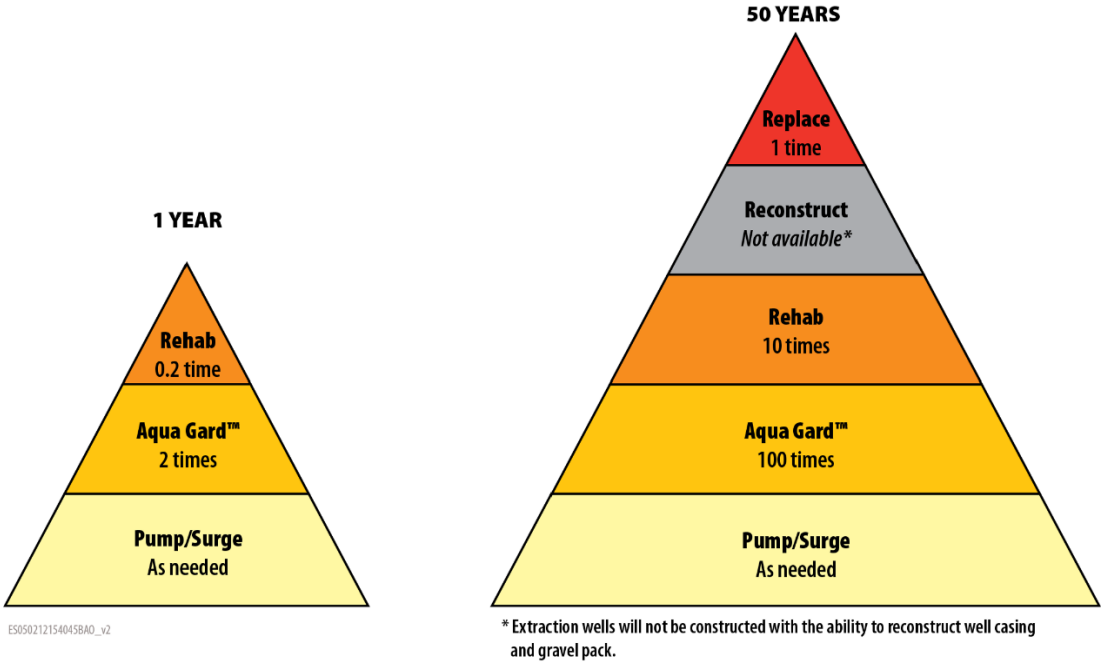

Note: Extraction wells are not considered to be good candidates for reconstruction due to their larger borehole diameter.

4.2.4 Monitoring Well Acceptance

Monitoring wells will be inspected during routine sampling or gauging events to confirm that the condition of the well is acceptable for the given data collection objective (using Well-SOP-09 [Appendix B]). If a monitoring well is not sampled or gauged routinely, then the condition of the well will be assessed on an annual frequency, at minimum. Acceptance criteria will include:

- Wellhead Condition – All monitoring wells will be inspected to assess whether well protection features, including the well seal, well vault/protective monument casing, and concrete pad/collar, are in place and functioning as designed.
- Well Casing and Screen Integrity – Wells will be sounded to verify total depth and determine if there are obstructions that could prevent sample collection. Field parameter measurements collected during sampling events (e.g., turbidity and pH) will also be monitored for indications that the well screen or casing might be compromised by collapse or grout intrusion. If there are indications of downhole problems, video surveying may be conducted as a second-level method to evaluate well casing and screen integrity.
- Well Fouling – Measurements of pumping rate and resulting drawdown within the monitoring well during routine purging during sampling events will provide ongoing assessment of well performance. These measurements will be compared against those collected during assessment of baseline well performance measured during well development or initial purging events.

Monitoring well maintenance, including wellhead repair or well screen re-development, will be performed on an as-needed basis as deficiencies are identified. For example, if the well does not yield groundwater samples that meet the sample collection criteria identified in the appropriate SOP (e.g., sustained turbidity above the given criteria), then re-development should be conducted. If well maintenance actions alone do not sufficiently correct a well deficiency, then the need for monitoring well reconstruction or replacement will be assessed with the regulatory agencies prior to implementation. Specific criteria/triggers related to well redevelopment will include:

- Turbidity measurements will be tracked in monitoring wells during routine sampling events. When the final, stabilized turbidity measurement collected during well sampling is consistently measured in the range of approximately 20-30 nephelometric turbidity units (NTU) additional evaluation will be conducted to determine if the well should be re-developed. This evaluation will include review of relevant information including past development records, water quality and hydraulic measurements collected during sampling events, and hydraulic data collected from well testing or longer-term pressure transducer measurement. As re-development events are evaluated and performed the results will be used to determine whether monitoring well re-development should be performed on a more or less frequent basis.
- Measurement (SOP-A11, Total Depth Measurements) of infill (siltation) at a depth that corresponds to the bottom of or within the screened interval will trigger re-development. It should be noted that if the well was constructed with a sump (as opposed to a standard threaded cap at the bottom of the well) re-development may be required to remove thicknesses of sediment that collect below the well screen.
- Specific capacity measurements will be tracked over time and compared against the baseline measurements and from event-to-event. Decrease in the specific capacity of a monitoring well that precludes groundwater sample collection in compliance with SOP-A18 (minimal drawdown method) will be re-developed. For wells that are sampled in accordance with SOP-A1 (well-volume method), re-development will be triggered when the specific capacity drops below 70 percent of the baseline measurement (at the flow rate used for sampling).

4.2.5 Reporting

Reporting requirements associated with the baseline evaluation of a well and performance monitoring data collected during the duration of remedial activities are defined in this section.

Baseline reporting will be completed once all the wells have been drilled, installed, developed, and tested and will be included in the *Corrective Measure/Remedial Action Construction Report*.

The well performance tracking data will be evaluated and reported on a quarterly basis. The frequency of data evaluation and reporting may change as well performance trends evolve during system operation. A suggested Well Performance Report outline, which includes the reporting of maintenance activities, is shown in Exhibit 4.2-9. Not all of the report elements included in the suggested outline may be applicable to each report.

EXHIBIT 4.2-9
General Outline for Well Performance Reporting
Groundwater Remedy Operation and Maintenance Manual
Volume 1: Operation and Maintenance Plan
PG&E Topock Compressor Station, Needles, California

1. Introduction
- 1.1. Purpose
- 1.2. Period of Performance
- 1.3. Report Organization

2. Extraction Well Performance
- 2.1. Run Time
- 2.2. Problems Encountered
- 2.3. Testing and Sampling
- Table 2-1. Extraction Well Flow Rates and Water Levels
- Table 2-2. Extraction Well Specific Capacities
- Table 2-3. Extraction Well Sampling Data

3. Injection Well Performance
- 3.1. Run Time
- 3.2. Problems Encountered
- 3.3. Testing and Sampling
- Table 3-1. Injection Well Flow Rates and Water Levels
- Table 3-2. Injection Well Specific Injectivities
- Table 3-3. Injection Well Sampling Data
- Table 3-4. Fresh Water Source Sampling Data

4. Monitoring Well Performance
- 4.1. Problems Encountered
- 4.2. Testing and Sampling
- Table 4-1. Monitoring Well Water Levels, Purging Events, and Specific Capacities
- Table 4-2. Monitoring Well Inspection Results

5. Routine Maintenance
- 5.1. Extraction Well Routine Maintenance
- 5.2. Injection Well Routine Maintenance

6. Non-Routine Maintenance
- 6.1. Extraction Well Non-Routine Maintenance
- 6.2. Injection Well Non-Routine Maintenance
- 6.3. Monitoring Well Maintenance

7. Suggested Well Modifications and Recommendations

4.3 Well Decommissioning

This section includes the general approach for decommissioning wells related to the Final Remedy at Topock and will be a guide to determining the appropriate methods for a given well. The general approach for well decommissioning was developed by a subgroup that includes PG&E, DTSC, DOI, and Interested Tribes. Detailed work plans for conducting well decommissioning will be based on this general approach. The Standard Operating Procedure for Well and Borehole Decommissioning (Well-SOP-01) is presented in Appendix B of this O&M Plan. As detailed in Well-SOP-01, a comprehensive list of all wells associated with the Topock Project will be maintained on the DTSC website, and the archive will be updated periodically as additional wells and boreholes are installed or decommissioned. The general procedures for decommissioning wells and exploratory boreholes are summarized below and further detailed in Section 2 of the Well-SOP-01. These four elements correspond to subsections 2.1 through 2.4 of the SOP, respectively.

- Evaluation of Well or Borehole – Key borehole information will be assembled and reviewed prior to decommissioning activities. This may include, but is not limited to, well measurements, video survey, geophysical survey, etc.
- Identification of Material and Placement Requirements - Different types of materials are required for different well or borehole decommissioning scenarios depending on the above-ground and subsurface environment. Selection of an appropriate well-specific material(s) will be made and could include a sealing material (such as neat cement, sand-cement slurry, concrete, or bentonite clay), filler material (such as clay, silt, sand, gravel, crushed stone, native soils, or mixtures of these) and/or displaced site material.
- Well or Borehole Decommissioning Scenarios – A suitable approach to well or borehole decommissioning will be selected based on the procedures in Well-SOP-01 and may include decommissioning in place, decommissioning in place with modification, or decommissioning by removing well materials.
- Well Decommissioning Reporting - Following completion of well or borehole decommissioning tasks, field activities and results will be reported to the agencies.

SECTION 5

Pipeline Maintenance and Repair

The groundwater remedy includes approximately 34,000 feet of trench and approximately 110,000 linear feet of pipeline, with over 90 percent being installed below ground either by direct burial, jack and bore, or in pre-cast concrete trenches. Belowground water pipes are made of plastic (HDPE). Aboveground water pipes are made of steel (Schedule 40 steel with AWWA C205 cement mortar lining).

This section discusses the clean-in-place (CIP) system, which is part of the in-situ remediation system (see Section 3.2.4), and presents general guidelines for the proper maintenance and repair of belowground plastic and aboveground steel that may be subject to third party or other unforeseen damage. This section is not intended to replace or supersede pipe manufacturers' instructions concerning the proper and safe delivery, handling, installation, testing, and use of the pipe product. Manufacturers' instructions and their terms for product warranty, and applicable standards set forth by industry and codes/regulations, shall be adhered to. Pipeline maintenance and repair shall be conducted by qualified and trained staff.

Additional pipeline maintenance provisions are described below in Section 5.4. An SOP for pipeline maintenance (PIPE-SOP-01) is provided in Appendix B.

5.1 Clean-In-Place (CIP) System

A CIP system has been included in the design of the NTH IRZ to facilitate maintenance of the groundwater pipelines. It is possible, during operation of the remedy, for biological films and mineral scale depositions to accumulate within the pipelines. The CIP system located at the MW-20 Bench carbon amendment facility allows for short duration addition of maintenance chemicals to remove the collected materials in the pipelines that may impact remedy performance. The CIP system has been designed to allow for connection of the extracted groundwater, backwash, and/or groundwater re-injection forcemains to create a recirculation loop within the pipeline system.

By installing dedicated piping and equipment for the chemical reagent metering process, the hazards to treatment system operators are minimized and controlled to the maximum extent possible. The CIP equipment includes day tanks for batch mixing chemical reagents, receiving tanks for recirculated and spent CIP solutions, dedicated floor space for totes or drums of chemical reagents, pumps and flow meters to control the addition of reagents, and associated alarms and valves to allow for the safe operation of the chemical addition process. Chemical reagents to be used are those categories of chemicals approved for use in drinking water systems. Bench-scale testing may be required before final reagent selection to determine the most effective reagent (see IRZ-SOP-07 in Appendix B).

During operation of the CIP loop, all of the groundwater extraction pumps will be de-energized, and the extraction and injection wells will be isolated from the pipelines by way of valves within the well vaults (i.e., the IRZ system will be shut down). Fresh water (or conditioned water) will be used to first flush the pipelines. The CIP solution will then be mixed in the reagent day tanks and pumped through the pipelines and into the receiving tank (in some cases the CIP solution may be mixed directly in the receiving tank). The solution will be re-circulated through the pump and piping system. Criteria for assessing pipeline flushing completion will depend on the nature of any biological films and/or mineral scale that may develop in the pipelines as well as the final reagent solution selection. SOPs for bench-scale testing (IRZ-SOP-07), CIP reagent delivery (IRZ-SOP-08), and CIP solution mixing and application (IRZ-SOP-09) are included in Appendix B of this O&M Plan. Potential chemical reagents for use in the CIP system may include hydrochloric, glycolic (hydroxyacetic), and phosphoric acids, sodium hydroxide, and hydrogen peroxide (see also Exhibit 5.1-1). After the CIP maintenance procedures have been completed, the spent CIP solution will be flushed from the groundwater force mains with fresh water (or conditioned water), and the spent solution will either be transferred from the receiving tank to the Remedy-produced Water Conditioning Plant, to the TCS ponds, or shipped off-site by tanker truck for disposal. The total volume of spent CIP solution is expected to be between 10,000 and 40,000 gallons per event. Operation of the CIP system is anticipated to occur

approximately annually, although it may possibly be as little as once every five years, and will be scheduled during times the IRZ system is offline to the extent possible.

EXHIBIT 5.1-1
Summary of Available Chemicals for Clean-In-Place System
Groundwater Remedy Operation and Maintenance Manual
Volume 1: Operation and Maintenance Plan
PG&E Topock Compressor Station, Needles, California

Chemical or Product	Chemical Formula	Primary/ Secondary	Chemical Type	Purpose	Notes
Hydrochloric Acid	HCl	Primary	Inorganic Acid	Geochemical scale and inorganic metal oxide scale	Also called muriatic. Highly corrosive - must use inhibitors. Do not mix with chlorine.
Phosphoric Acid	H_3PO_4			Metal and mineral hydroxides, sulfate salts	Often used with biological dispersant
Glycolic (Hydroxyacetic) Acid	$C_2H_4O_3$	Secondary	Organic Acid	Biofouling and disinfecting	Often mixed with HCl
Hydrogen Peroxide	H_2O_2	Secondary	Disinfectant/Oxidant	Biofouling and disinfecting	Often mixed with HCl
Sodium Hydroxide	NaOH	Primary	Caustic/Base	Biofouling/organic fouling and pH buffer	Corrosive, do not add to acids

5.2 Maintenance and Repair of Plastic Pipe (HDPE)

In general, properly handled and installed heat-fused HDPE pipeline provides a maintenance-free system with leak-free joints at up to 40-foot intervals, except for infrequent unforeseen third party damage. If HDPE pipe is damaged or leaking, repair methods will be required to bring the piping system back into service as soon as practicable. Section(s) of direct burial pipe requiring repairs will need to be exposed by excavation, whereas below-ground pipe sections inside precast concrete trenches can be accessed via maintenance manhole(s) or by removing sections of the precast concrete lids.

For aboveground repairs (or below ground pipe sections that have been exposed for repair), when the pipe can be moved, the damage can be cut out and replacement pipe can be butt fused or electrofused into the system. In the event that the pipe cannot be moved, alternative repair techniques and fittings that do not require longitudinal movement can be used.

For field repairs of small puncture damage, techniques involving saddle fusion, electrofusion patch, mechanical fittings, etc. can be used depending on the location, nature, and extent of the damage. Exhibit 5.2-1 shows example pictures of select repair techniques. An electrofusion patch can be used when the water flow can be stopped and the repair area can be kept dry during the repair process. In some cases where the damage is limited to a single discrete location but has severed the pipe, a small section of the pipe can be cut out to install a mechanical coupling in the damaged area. A certain amount of the piping system will need to be exposed to allow the pipe to be bent for installation of the coupling.

For larger field repairs, techniques involving mechanical fittings, solid sleeves, flange adapter spool, electrofusion spool, etc. can be employed depending on the location, nature, and extent of the damage(s).

Exhibit 5.2-1
Pictures of Select Repair Techniques - Saddle Fusion, Electrofusion Patch, Mechanical Coupling (top to bottom)
Groundwater Remedy Operation and Maintenance Manual
Volume 1: Operation and Maintenance Plan
PG&E Topock Compressor Station, Needles, California

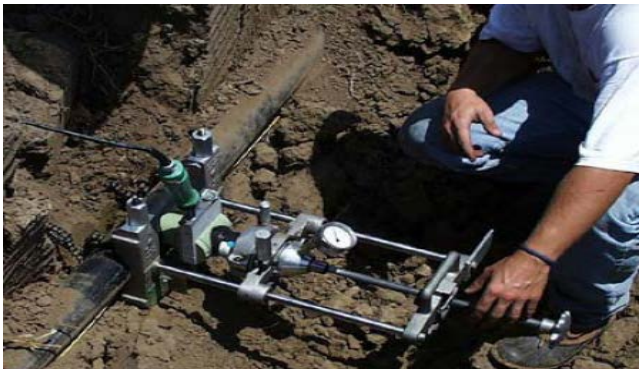



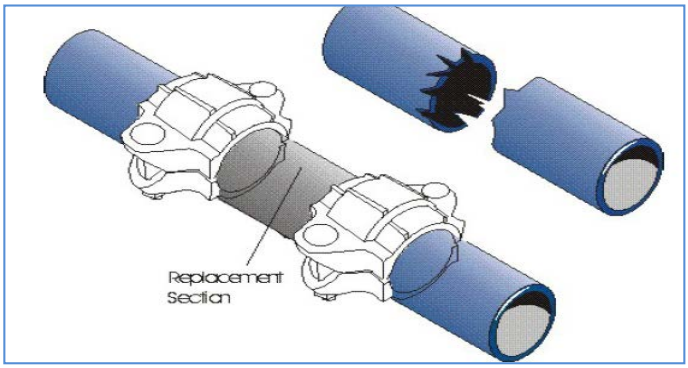

5.3 Maintenance and Repair of Aboveground Pipe (Schedule 40 Steel with Cement Mortar Lining)

Although over 90 percent of the remedy piping system is below ground, there is one aboveground water pipe segment: over 900 feet of 12-inch pipe (Schedule 40 steel with cement mortar lining) conveying fresh water from the water supply well HNWR-1A in Arizona across the Arched Bridge to the California side of the Colorado River.

Overall, cement mortar lined steel pipe conveying treated or conditioned water has proven to have a long and maintenance free service life in the water services industry. Cement mortar lined pipe conveying raw or fresh water will require periodic inspection of the lining to see if the thickness has reduced or if the cement mortar is corroding. Repair of the lining usually requires curing time that could take up to 24 hours. All inspection and repair work will be in accordance with manufacturer's recommendations.

All of the exterior aboveground pipe segments will be painted externally (the paint color will be in compliance with the Environmental Impact Report (EIR; DTSC 2011) mitigation measure AES-1d and AES-2e, i.e., muted, earth-tone colors that are consistent with the surrounding natural color palette; the paint color for the pipe segment on the Arch Bridge will match the color of neighboring pipe). Therefore, they will need to be repainted periodically for upkeep and aesthetic reasons.

5.4 Additional Pipeline Maintenance Provisions

Provisions are included in the design to allow for removal of potential blockages and solids that may settle in the piping network during the decades-long operation of the remedy. These provisions include pipe cleanouts and blowoffs - pipe cleanouts are intended to provide access to the pipe for cleanout of blockages, and pipe blowoffs are typically provided at low points to allow for removal of solids that settle at the bottom of the pipe. In addition, for the freshwater pipeline, a sand separator will be installed at the wellhead to minimize the amount of sand in the water and thereby minimize solids settle-out at the bottom of the downstream conveyance pipe. The addition

of maintenance additives for short durations to remove collected materials in the pipelines, as included in the NTH IRZ using the CIP system (see Section 5.1), may also be necessary for other remedy piping.

Access to remedy piping, such as that provided by the pipeline cleanouts and blowoffs, will allow for pipeline cleaning using the following methods in addition to short-duration chemical addition:

- **Flushing** – Flushing involves controlling water flow direction and velocity in order to re-suspend settled solid deposits and flush them from the pipeline.
- **Pigging** – Pigging involves the use of pressure to propel a pipeline pig device (for HDPE piping typically a cylindrical foam and plastic device) through the pipeline in order to scrape/scrub the pipe surfaces and push loosened materials to a pre-determined recovery point.

Procedures for implementation of the above maintenance methods are detailed in the conveyance system inspection and maintenance SOP (PIPE-SOP-01) provided in Appendix B of this O&M Plan.

Additional preventative maintenance measures may be employed, including pH adjustment to control potential scale formation. pH adjustment involves the continuous dosing of acid (e.g., hydrochloric acid or other acids included in Exhibit 5.1-1) at low concentrations into the conveyed water to depress pH to a level that would suppress the formation of mineral scales, such as calcite. The adjusted pH is expected to remain circumneutral (i.e., pH between 5.5 and 7.4).

Water and sediments generated from pipeline maintenance operations will be containerized (for example, at the frac tanks at the MW-20 Bench) and transported off site, to the TCS evaporation ponds, or to the influent tanks of the Remedy-produced Water Conditioning Plant.

Sands from the sand separator located at the freshwater supply well site will be contained in the purge water. The purge water will be allowed to percolate into the ground via a dry well filled with rock located near the freshwater supply well.

SECTION 6

Waste Management Plan and Recoverable Materials

6.1 Waste Management Plan

This section presents procedures for the proper collection, characterization, storage, transportation, and disposal of waste generated during the operation and maintenance of the groundwater remedy. Wastes generated from O&M activities will be managed onsite in compliance with the EIR mitigation measures adopted in the certified EIR (DTSC 2011) and the applicable or relevant and appropriate requirements (ARARs) established in the Record of Decision (DOI 2010), and will be disposed of offsite in a manner consistent with applicable local, state, and federal laws and regulations.

Disposal facilities that receive Comprehensive Environmental Response, Compensation, and Liability Act (CERCLA) waste (wastes that contain CERCLA hazardous substances, pollutants, or contaminants) will be in compliance with the CERCLA Off-Site Rule (42 U.S.C. 9621 (d) (3) and 40 CFR 300.440). In accordance with the requirements of the Remedial Design/Remedial Action Consent Decree (DOI 2013), prior to the first shipment of waste material offsite, and annually thereafter, PG&E will demonstrate to DOI's satisfaction that the U.S. Environmental Protection Agency (USEPA) has determined that the proposed receiving facility is operating in compliance with 42 U.S.C. § 9621(d)(3) and 40 C.F.R. § 300.440. If PG&E knows or has reason to know the facility no longer meets the criteria of 40 C.F.R. § 300.440(b), PG&E will inform DOI, propose an alternate receiving facility prior to any subsequent shipments, and demonstrate to DOI's satisfaction that USEPA has determined that the alternate receiving facility is operating in compliance with 42 U.S.C. § 9621(d)(3) and 40 C.F.R. § 300.440. The waste material will be stored onsite in accordance with this waste management plan until approval is received and the waste material is transported offsite. If the waste management facility is out-of-state, prior to the first shipment of waste material, PG&E will provide written notice for disposal of waste material at the listed facilities to the appropriate State environmental official in each receiving facility's State and the DOI Project Manager.

Characterization and management of displaced soil generated during drilling, construction, and O&M activities are not discussed herein. Management of soil is discussed in the Soil Management Plan (see Volume 4 of this O&M Manual). A subgroup that consists of Agencies, Interested Tribes, and PG&E has worked on the *Draft Management Protocol for Handling and Disposition of Displaced Site Material, Topock Remediation Project, Needles, California.* A copy of the revised management protocol is included as Appendix B in the Soil Management Plan (Volume 4 of this O&M Manual).

Characterization and management of waste generated from construction activities are included in the Construction/Remedial Action Work Plan, which is being submitted concurrently with the final design submittal.

6.1.1 Expected Waste Streams

Expected waste streams from remedy O&M activities and their estimated quantities are described below:

- Remedy-produced water generated from well maintenance activities such as backwashing and rehabilitation, sampling purge water, equipment decontamination, rainfall that collects in secondary containment areas, and wastewater from well drilling/replacement/decommissioning. Some wastewater may be temporarily stored in portable tanks at well heads during the characterization step prior to the final disposal. The current estimated total volume of remedy-produced water is shown in Exhibit 6.1-1.
- The volume of spent solution generated from the CIP system is expected to be roughly 10,000 to 40,000 gallons per maintenance event. The frequency of maintenance is anticipated to be once per year (see Section 5.1).
- Displaced soil from well drilling/replacement/decommissioning and O&M activities. See Volume 4, Soil Management Plan, of this O&M Manual.

- Precipitated solids/sludge and spent filters generated from the Remedy-produced Water Conditioning Process. The amount of precipitated solids and sludge is estimated to be 1.6 tons (dry weight) per year, based on 7.6 million gallons per year of remedy-produced water, using 25 percent caustic to neutralize the first flush of well rehabilitation water. The amount of spent filters is estimated to be 0.45 tons (dry weight) per year.
- Water and sediments from pipeline maintenance (pipe maintenance vaults).
- Used personal protective equipment.
- Empty drums, cans, unused chemicals, paints, used oil, used solvents, etc.
- Universal waste including batteries, electronic devices, lamps, aerosol cans, and mercury-containing equipment.
- Non-Regulated Waste such as but not limited to; paper bags, cardboard boxes, basic household and office debris, etc.
- Recoverable materials (see Section 6.2).
- Sanitary waste (buried septic tanks connected to restrooms/shop sink at the TW Bench and the long-term remedy support area at Moabi Regional Park).

EXHIBIT 6.1-1
Summary of Remedy-produced Water Volume by Source and Type
Groundwater Remedy Operation and Maintenance Manual
Volume 1: Operation and Maintenance Plan
PG&E Topock Compressor Station, Needles, California

Source/Type[c]	Wells [a]	Events/ Year	Annual Volume, MG/year	Comments
Backwash				
Injection Wells	32	30-51 [b]	4.67	Weekly backwashing
Well Rehabilitation				
Injection/IRZ Extraction Wells	36	1	2.42	Annual rehabilitation
Extraction Wells (non-IRZ)/Supply Well	13	0.2	0.14	Rehabilitation every 5 years
Other				
Rainwater	-	-	0.3	
Monitoring well sampling and development purge water and equipment decontamination water	-	-	0.1	
Total			**7.6**	

Notes:
MG = million gallons
[a] The well count is as follows: 32 Injection Wells = 24 NTH IRZ, 4 IRL, 2 TCS, and 2 Freshwater Injection Wells; 36 Injection/IRZ Extraction Wells = 32 Injection Wells plus 4 IRZ extraction wells; 13 Extraction Wells (non-IRZ)/Supply Well = 5 Riverbank Extraction Wells, 5 East Ravine Extraction Wells, 2 TW Bench Extraction Wells, and 1 Freshwater supply well.
[b] IRZ wells will be operated on a 6 month on/18 month off cycle, so backwashes are assumed to be only 30 times per year. See Appendix F of the BOD Report, Remedy-produced Water Management Technical Memorandum, for more detail.
[C] If the contingent FWPTS were to be implemented, backwash water generated from the treatment system is an additional source of remedy-produced water. The majority (approx. 95%) of the backwash water generated will be recycled in the FWPTS leaving only about five percent of the backwash stream needing to be managed (this stream is not expected to have elevated arsenic concentrations). The volume of this backwash stream is anticipated to be minimal.

6.1.2 Waste Characterization

Characterization of displaced soil is discussed in the Soil Management Plan (Volume 4 of the O&M Manual). Waste material with the potential to be hazardous wastes will be characterized per the procedures outlined below. Note that once the characteristics or profile of a waste stream is established, PG&E will continue to use the same waste profile, unless a process change indicates that the waste stream should be re-characterized.

6.1.2.1 Liquid Wastes

Liquids will be classified as hazardous waste if they exhibit a pH of 2.0 or below, or 12.5 or above; dissolved chromium concentration equal to or greater than 5 parts per million (ppm); and/or dissolved arsenic concentration equal to or greater than 5 ppm. Liquids will be evaluated for the presence of metals having hazardous waste toxicity characteristic levels specified in 22 CCR 66261.24 using the following approach:

- Liquid wastes containing less than 0.5 percent filterable solids will be analyzed for total metals and the results compared with the Resource Conservation and Recovery Act (RCRA) toxicity characteristic (TC) limits in 22 CCR 66261.24(a)(1) and the soluble threshold limit concentrations (STLC) in 22 CCR 66261.24(a)(2). If any constituent exceeds the RCRA TC limit the waste will be classified as RCRA hazardous. If no constituents exceed the RCRA TC limit, but one or more constituents exceed the STLC, the waste will be classified as non-RCRA hazardous. If neither limit is exceeded the waste will be classified as non-hazardous.
- Liquid wastes containing 0.5 percent or more filterable solids will be analyzed using the toxicity characteristic leaching procedure (TCLP) and the results compared with the RCRA TC limits. If a TC limit is exceeded the waste will be classified as RCRA hazardous. If no TC limits are exceeded the waste will be analyzed using the California Waste Extraction Test (WET) and the results compared with the STLCs. If one or more STLCs is exceeded the waste will be classified as non-RCRA hazardous. If neither limit is exceeded the waste will be classified as non-hazardous.

6.1.2.2 Solid Wastes

Solid wastes will be analyzed for total metals expressed in milligrams per kilogram (mg/kg) and the results will be evaluated as follows:

1. If the total constituent concentration exceeds the total threshold limit concentration (TTLC) in 22 CCR 66261.24(a)(2), material will be classified as a non-RCRA hazardous waste. Additional evaluation of the STLC, as described in step 3 below, will not be performed.
2. If the total constituent concentration exceeds the numeric value of the RCRA TC level by 20 times or more, the TCLP will be performed. If the constituent concentration in the TCLP leachate exceeds the TC level, the material will be classified as a RCRA hazardous waste. Additional evaluation of the STLC, as described in step 3, will not be performed.
3. If the material has not been classified as hazardous waste in steps 1 or 2, the total constituent concentration will be compared to the STLC. If the total constituent concentration exceeds the numeric value of the STLC by 10 times or more, the WET will be performed. If the constituent concentration in the WET exceeds the STLC, the material will be classified as a non-RCRA hazardous waste.

If the material has not been classified as a hazardous waste in steps 1, 2, or 3, it will be classified as non-hazardous waste.

6.1.2.3 Miscellaneous Wastes

Miscellaneous waste such as trash, paper bags, and cardboard boxes will be disposed of as non-hazardous solid waste, unless affected by potentially contaminated material or water. Potentially contaminated miscellaneous waste will be combined with other hazardous waste. Empty, used 55-gallon drums that formerly contained hazardous materials will be labeled with the word “empty” and the date emptied, and will be returned to the original chemical supplier or turned over to a drum re-conditioner. Drums being reconditioned will be removed from the site within one year.

6.1.3 Management of Waste

This section discusses the management plan for remedy-produced water and onsite management of other waste streams.

6.1.3.1 Management Plan for Remedy-produced Water (include spent solutions from CIP)

Different types of remedy-produced water require different management approaches. Multiple options are maintained to provide operational flexibility and reliability. A major portion of the produced water will be conditioned in the remedy-produced water conditioning system located at the Compressor Station; a description of the system and its operation and maintenance procedures are provided above in Sections 2 and 3, respectively. The conditioning plant is not designed for treatment of RCRA and non-RCRA hazardous waste. Only non-hazardous waste will be sent to the TCS evaporation ponds. Certain waste streams generated by the remedy (e.g., first flush wastewater from well rehabilitation or purge water from certain monitoring wells) may exhibit hazardous levels of dissolved chromium and/or arsenic, and will be appropriately managed and not send to the ponds. PG&E's understanding of the specific nature of the various wastes in addition to quantity will be further refined through operational experience once the remedy is implemented.

Exhibit 6.1-2 describes the management plan in a narrative format, and Figures 6.1-1 and 6.1-2 (located at the end of this section) illustrate the management plan in a graphical format. This plan is intended to be flexible and to evolve with operational experience during the groundwater remedy implementation.

EXHIBIT 6.1-2
Management Plan for Remedy-produced Water
Groundwater Remedy Operation and Maintenance Manual
Volume 1: Operation and Maintenance Plan
PG&E Topock Compressor Station, Needles, California

Source[d]	Volume (MG/year)	Management Plan – Listed in Order of Preference
Backwash of freshwater injection wells/IRL injection wells receiving fresh water	2.32 [b, c]	Process through B-side of Remedy-produced Water Conditioning Plant,[f] then to: 1. IRZ injection wells 2. Compressor station cooling towers
Backwash of IRZ injection wells, TCS injection wells, IRL injection wells receiving water from river bank extraction wells, and IRZ CIP [a]	2.35 [b, c]	Process through A-side of Remedy-produced Water Conditioning Plant, then to IRZ injection wells
Well rehabilitation (all wells) - first flush	0.77 [b, c]	1. TCS ponds[e] 2. Trucked offsite[e] 3. Field neutralization and/or field filtered with a transportable treatment unit, and then convey water to Remedy-produced Water Conditioning Plant (A-side) for processing and re-inject into IRZ injection wells.
Well rehabilitation (all wells) – second flush	1.8 [b, c]	Same as backwash from corresponding well
Other water – cleaner streams	0.3	Relatively clean water, such as rainwater in containment and some decontamination water, will be managed by the same means as the backwash water from freshwater injection wells. Process through B-side of Remedy-produced Water Conditioning Plant, then to: 1. IRZ injection wells 2. Compressor station cooling towers
Other water – some purge and decontamination water	0.1	1. Process through A-side of Remedy-produced Water Conditioning Plant, then to IRZ injection wells 2. TCS ponds 3. Trucked offsite

EXHIBIT 6.1-2
Management Plan for Remedy-produced Water
Groundwater Remedy Operation and Maintenance Manual
Volume 1: Operation and Maintenance Plan
PG&E Topock Compressor Station, Needles, California

Source[d]	Volume (MG/year)	Management Plan – Listed in Order of Preference
Other water – wastewater from construction of wells in the future	Short-term	High-solids water: TCS ponds or truck offsite Low-solids water: Process through A-side of Remedy-produced Water Conditioning Plant, then to IRZ injection wells For construction of the initial wells (prior to having the IRZ wells and the remedy produced water condition plant in place), the management options will also include re-injection into the aquifer near where the well is drilled and processing at the IM3 treatment plant (after characterization).

Notes:
MG = million gallons

[a] Prior to transferring the spent solution from the Clean-in-Place (CIP) System to the remedy-produced water conditioning plant, the solution will be allowed to settle and precipitate solids prior to pumping to the conditioning plant. Spent solutions from CIP System could also be shipped off-site for disposal or to the TCS ponds.

[b] Assumes half of the flow to the IRL injection wells is fresh water with the remainder amended with carbon.

[c] Testing of IRZ well maintenance schemes at Hinkley is complete and the weekly backwashing and annual rehabilitation frequency have been confirmed. Assumed that roughly 30% of rehabilitation water will be high-solids or low-pH "first flush" water. Remainder assumed to be similar in nature to backwash water.

[d] If the contingent FWPTS were to be implemented, backwash water generated from the treatment system is a potential additional source of remedy-produced water. The majority (approx. 95%) of the backwash water generated will be recycled in the FWPTS leaving only about five percent of the backwash stream needing to be managed (this stream is not expected to have elevated arsenic concentrations). The management options for backwash water include reuse in the cooling towers, discharge to the evaporation ponds, and/or truck to off-site permitted disposal facilities.

[e] Note that prior to the disposal at the TCS ponds or trucking offsite, field neutralization and/or field filtered with a transportable treatment unit may occur.

[f] To allow for operational flexibility to segregate/manage various produced water streams and to optimize processes in the future, the conditioning system will be configured with two parallel trains: 1) A-side Remedy and 2) B-side Freshwater. Both trains will be equipped initially with identical processes/units as illustrated in Exhibit 3.4-4.

6.1.3.2 Onsite Management of Other Wastes

Waste materials will be managed onsite in demarcated waste management areas. Waste management areas are identified in Figure 6.1-3. Within the waste management areas, hazardous wastes will be segregated from non-hazardous wastes (note that hazardous waste will primarily be stored at TCS. If needed, PG&E may also store hazardous wastes at the Transwestern Bench).

Additionally, incompatible hazardous wastes (e.g., flammable and corrosives wastes) will be segregated. Wastes of the same matrix, contamination, and source may be aggregated to facilitate accumulation and disposal. Lined roll-off boxes will be used to contain solid wastes. Liquid wastes will be contained in drums, totes, or portable tanks. Cleaning and decontamination wastewater will be contained in portable tanks within secondary containment near the point of origin while the water is characterized for onsite management or offsite disposal. Incidental trash, such as wooden pallets and food and beverage containers, will be contained in dumpsters located in staging areas near temporary facilities. Universal waste will be stored in containers or packages that will remain closed; are structurally sound; are adequate to prevent breakage; are compatible with contents of batteries, lamps, or thermostats; and lack evidence of leakage, spillage, or damage that could cause leakage under reasonably foreseeable conditions. When possible, containerized wastes will be direct-loaded onto a truck and removed from the site from the point of generation (e.g., potentially during rehabilitation event at well site).

Non-RCRA and RCRA hazardous wastes will be removed from the site within 90 days from the date of generation. The date of generation is the day that a waste is first placed in a container or stockpiled. The accumulation start date for containers is documented on the hazardous waste label. A log or other record will be used to document

the accumulation start date for stockpiles and tanks. Labeling of waste containers (tanks) will be in accordance with 22 CCR Division 4.5 Chapter 12 and 49 CFR 172, 173, and 178. Universal waste will be labeled as universal waste plus the type of universal waste (e.g., "Universal Waste – Batteries"); it will be accumulated onsite up to one year, and not more than 5,000 kilograms (kg) will be accumulated at one time. Universal waste will be sent to a permitted recycling facility. Waste accumulation and equipment storage areas will be inspected daily for labeling, malfunctions, deterioration, discharges, and leaks that could result in a release. Any deficiencies observed or noted during inspection will be corrected immediately, and corrective measures will be documented and maintained onsite.

6.1.4 Waste Transportation and Disposal

After the wastes are containerized and labeled, those wastes ready for offsite disposal will be loaded onto trucks for transport to preapproved disposal facilities. A designated transportation and disposal coordinator will be onsite during transportation and disposal activities. This individual will be responsible for coordinating and overseeing these activities.

As truck loading is completed, the containers and trucks will be inspected and brushed as necessary to remove loose materials, if the truck is transporting hazardous waste. Each load on all trucks will be inspected by the driver to ensure that the load is secure. Appropriate documentation to include waste manifests or shipping papers will be completed, checked, and kept onsite. In addition, a truck log with loading and transportation information will be maintained. Transport vehicles will proceed to the designated disposal facilities in accordance with local, state, and federal transportation requirements. Transportation and disposal of wastes generated during construction are addressed in the Construction/ Remedial Action Work Plan.

6.1.5 Disposal Facilities

Wastes designated as RCRA or Non-RCRA hazardous wastes and non-hazardous soil will be transported to and disposed of at an appropriately permitted facility. In accordance with the requirements of the CD (DOI 2013), prior to the first shipment of waste material offsite, and annually thereafter, PG&E will demonstrate to DOI's satisfaction that USEPA has determined that the proposed receiving facility is operating in compliance with 42 U.S.C. § 9621(d)(3) and 40 C.F.R. § 300.440. If PG&E knows or has reason to know the facility no longer meets the criteria of 40 C.F.R. § 300.440(b), PG&E will inform DOI, propose an alternate receiving facility prior to any subsequent shipments, and demonstrate to DOI's satisfaction that USEPA has determined that the alternate receiving facility is operating in compliance with 42 U.S.C. § 9621(d)(3) and 40 C.F.R. § 300.440. The waste material will be stored onsite in accordance with this waste management plan until approval is received and the waste material is transported offsite. If the waste management facility is out-of-state, prior to the first shipment of waste material, PG&E will provide written notice for disposal of waste material at the listed facilities to the appropriate State environmental official in each receiving facility's State and the DOI Project Manager, and will comply with state law with regard to providing any further notifications. Additionally, PG&E will notify the state environmental official referenced above and the DOI Project Manager of any major changes in the shipment plan, such as a decision to ship the waste material to a different out-of-state facility.

PG&E proposes use of the following potential disposal facilities for the project as well as others, subject to the communication and approval processes under the Consent Decree outlined above:

Chemical Waste Management – Kettleman Hills Facility – Landfill
35251 Old Skyline Road
Kettleman City, CA 93239

US Ecology Inc. - Landfill
Highway 95 (12 miles South of Beatty, NV)
Beatty, NV 89003

Clean Harbors Button Willow – Landfill
2500 West Lokern Road
Button Willow, CA 93206

6.2 Recoverable Materials

Some waste streams generated from various maintenance activities such as piping and/or process equipment removal/replacement, electrical equipment refurbishment, secondary containment structure repair, etc. are potentially recoverable or salvageable for reuse or recycle. Efforts will be made to limit the amount of components and materials leaving the site by recovering non-hazardous equipment and materials. All recoverable materials must be non-hazardous. An evaluation of reuse and recycling options will be conducted to determine the most appropriate and sustainable way to manage non-hazardous recoverable materials.

Exhibit 6.2-1 lists general categories of recoverable materials that could be available and recycle options for these materials.

EXHIBIT 6.2-1
Recoverable Materials
Groundwater Remedy Operation and Maintenance Manual
Volume 1: Operation and Maintenance Plan
PG&E Topock Compressor Station, Needles, California

Recoverable Materials	Recycle Options Typical in the Industry
Useable Equipment	Sell directly or wholesale to third party
Useable Structural Steel & Piping	Sell directly or wholesale to third party
Scrap Steel, Re-bar and Iron	Deliver and sell to scrap processor
Non-Ferrous Metals (copper, aluminum, titanium) and Stainless Steel	Deliver and sell to scrap processor
Plastic	Deliver and sell to a plastic recycler
Concrete – Unprocessed	Deliver to outside crushing plant for processing and sale to third party

Scrap steel and iron could be generated during the maintenance of buildings and removal of equipment, tanks, and piping. Copper could be generated during the removal/replacement of electrical utilities and lighting. Stainless steel could be generated during the removal/replacement of instruments, small diameter piping, fittings, and appurtenances. Plastic could be generated from the removal/replacement of pipes, valves, and appurtenances. Concrete could be generated from the repair of foundation and secondary containment structures, culverts, and precast concrete vaults and trenches. Fiberglass could be generated from the replacement of tanks and pumps.

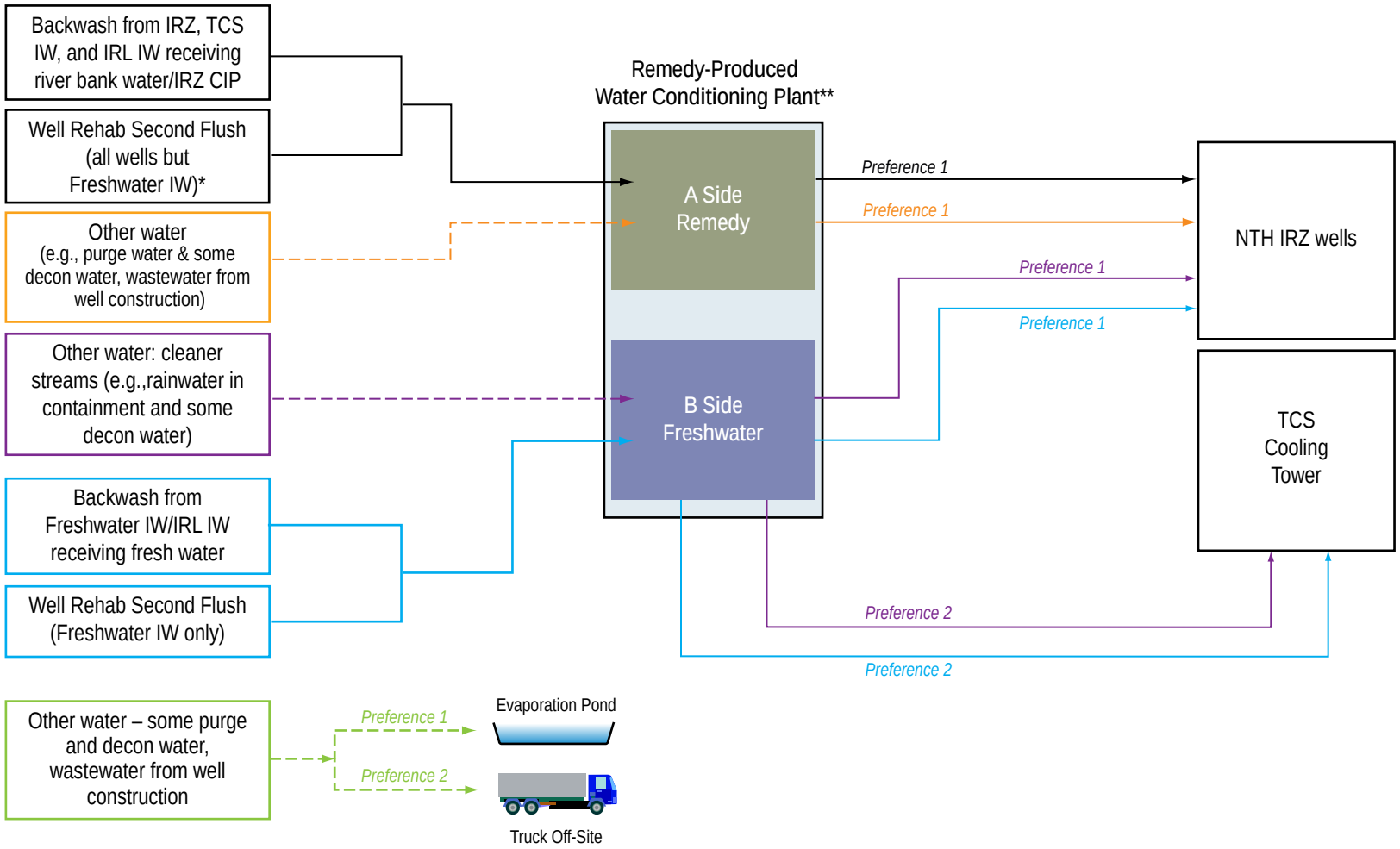

LEGEND

Piping

Conveyed by truck

* Conveyance by trucking is backup option for IRZ and injection wells. For extraction wells, some trucking may be required.

** Lowest preference options for disposing of Remedy Produced Water in Evaporation Ponds, offsite facility.

CIP	Clean in Place
IRZ	In-situ Reactive Zone
TCS	Topock Compressor Station
IW	Injection wells
IRL	Inner recirculation loop
NTH	National Trails Highway

FIGURE 6.1-1
REMEDY-PRODUCED WATER SCHEMATIC – BACKWASH AND SECOND FLUSH REHABILITATION
GROUNDWATER REMEDY OPERATION AND MAINTENANCE MANUAL
VOLUME 1: OPERATION AND MAINTENANCE PLAN
PG&E TOPOCK COMPRESSOR STATION,
NEEDLES, CALIFORNIA

CH2MHILL

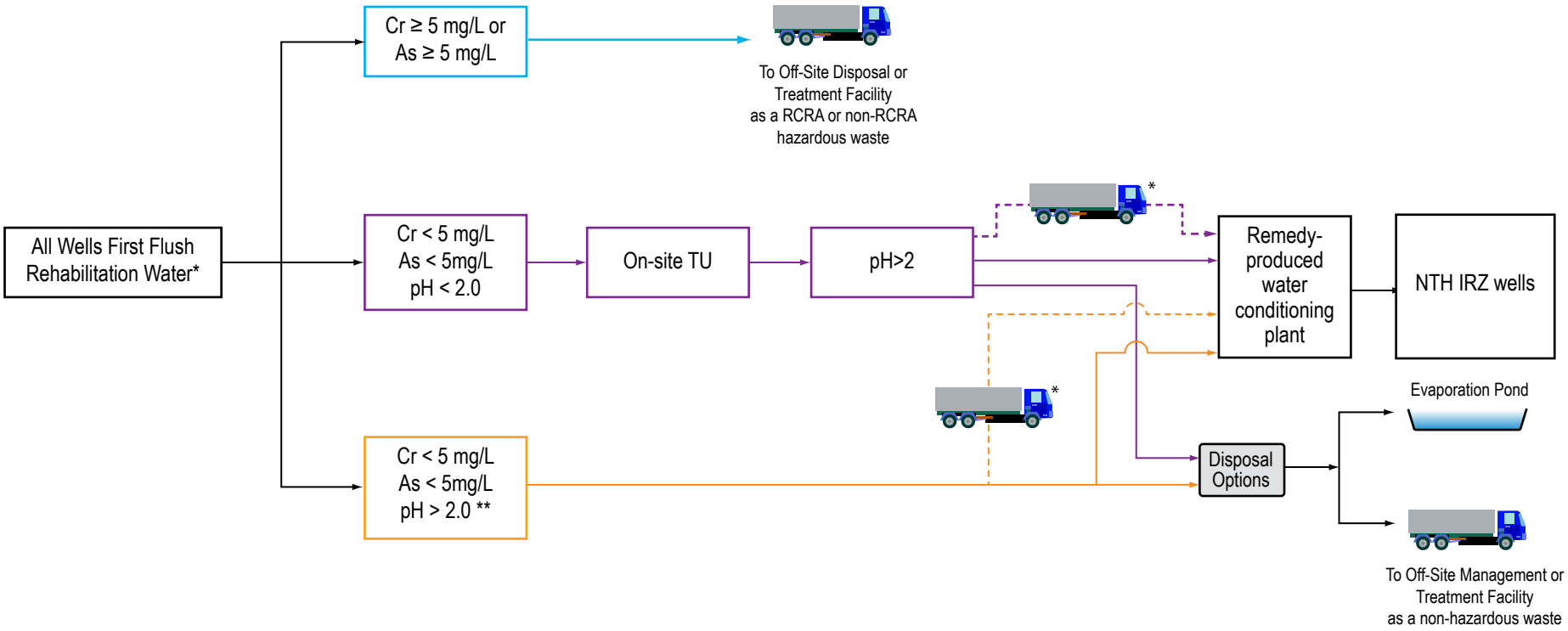

LEGEND

Piping

Conveyed by truck

TU	Treatment Unit permitted for (pH adjustment) hazardous waste treatment per California Code of Regulations Title 22. TU may be equipped with filters to remove solids.
Cr	Chromium (dissolved)
As	Arsenic (dissolved)
IRZ	In-situ Reactive Zone
*	Conveyance by trucking is backup option for IRZ and injection wells. For extraction wells, some trucking may be required.
**	An optional approach to pH adjustment at the Remedy-Produced Water Conditioning Plant is to adjust it in the field with an On-Site TU
RCRA	Resource Conservation and Recovery Act

FIGURE 6.1-2
REMEDY-PRODUCED WATER SCHEMATIC – FIRST FLUSH REHABILITATION
GROUNDWATER REMEDY OPERATION AND MAINTENANCE MANUAL
VOLUME 1: OPERATION AND MAINETNAMCE PLAN
PG&E TOPOCK COMPRESSOR STATION,
NEEDLES, CALIFORNIA

San Bernardino
County Leased
(Managed by BLM)

Fort Mojave
Indian Tribe

Bureau of Reclamation
(Managed by BLM)

Havasu National Wildlife Refuge
(Managed by USFWS)

IM-3
Facility

MW-20
Bench
Facility

Bureau of Land Management
(Owned and Managed by BLM)

BNSF Railroad

Havasu National Wildlife Refuge
(Managed by USFWS)

Caltrans Leased

San Bernardino County

Bureau of Land Management
(Owned and Managed by BLM)

Havasu National Wildlife Refuge
(Managed by USFWS)

PG&E
Topock
Compressor
Station

PG&E

Moabi Regional Park

LEGEND

- Area of Potential Effects (APE)
- EIR Project Area
- Proposed Waste Management Area
- Property Boundary

Notes:
1. All area designations are subject to owner approval.

N

0 250 500 1,000 Feet

FIGURE 6.1-3
WASTE MANAGEMENT AREAS
GROUNDWATER REMEDY OPERATION AND MAINTENANCE MANUAL
VOLUME 1: OPERATION AND MAINTENANCE PLAN
PG&E TOPOCK COMPRESSOR STATION,
NEEDLES, CALIFORNIA

CH2MHILL

Path: R:\PGEAlliance\Topock\MapFiles\2015\Vol1\Vol1_Fig613..mxd Date Saved: 10/13/2015 11:23:45 AM

SECTION 7

Other Site Management Practices

This section of the O&M Plan presents the framework for other site management practices including storm water pollution prevention, hazardous material management, fuel storage and fueling practices, and access road maintenance.

7.1 Storm Water Pollution Prevention

In compliance with the EIR mitigation measures HYDRO-1, HYDRO-2, and HYDRO-3 (DTSC 2011) and Federal Action-Specific ARAR #34 (DOI 2010), a Storm Water Pollution Prevention Plan for O&M activities (O&M SWPPP; see Appendix D of this O&M Plan) has been prepared to comply with the substantive requirements of the 2015 California General Industrial Storm Water Permit (IGP). The Topock project site is under the regional jurisdiction of the RWQCB.

In accordance with the General Permit, stormwater pollution prevention has two major objectives:

- Identifying and evaluating sources of pollutants associated with industrial activities that may affect the quality of storm water discharges and authorized non-storm water discharges from the facility.
- Identifying and implementing site-specific best management practices (BMPs) to reduce or prevent pollutants from being released in storm water discharges and/or authorized non-storm water discharges that may affect receiving water quality.

The O&M SWPPP covers all remedy facilities located outside of the Compressor Station. It identifies BMPs as required by law, and establishes a monitoring and sampling plan (including visual inspections and an annual comprehensive review). The annual comprehensive review is required to evaluate the effectiveness of the BMPs and to determine whether modifying BMPs or implementing additional BMPs is required. Please note that the remedy design has incorporated engineering elements to reduce or prevent pollutants from being released in storm water discharges (e.g., install overhead protection for areas where hazardous materials are stored/handled, collect and route stormwater in secondary containment to either the Remedy-produced Water Condition Plant or the TCS wastewater tank discharge connection to the evaporation ponds).

7.2 Hazardous Material Management

In compliance with the EIR mitigation measure HAZ-1a-c and California Action-Specific ARAR #90, the existing project-specific Hazardous Materials Business Plans (HMBPs) for the Topock Compressor Station and the IM-3 Treatment Plant will be updated to include the hazardous materials used at the new facilities to be constructed for the groundwater remedy, as discussed further below. Each business in San Bernardino County that handles, uses, generates or stores hazardous materials is required to comply with state and federal community right-to-know laws. The primary purpose of these laws is to provide readily available information regarding the location, type, and health risks of hazardous materials to emergency response personnel, authorized government officials, and the public. These requirements are found in California Health & Safety Code Division 20, Chapter 6.95, Sections 25500 – 25520; CCR Title 19, Division 2, Chapter 4, Article 4, Sections 2729 – 2732; Title 40 CFR; and USEPA regulations (Superfund Amendments and Reauthorization Act of 1986 [SARA], Title III).

Hazardous materials used or generated by this project are expected to include the following:

- Groundwater with total chromium or arsenic concentrations of 5 mg/L or more
- Well maintenance and rehabilitation reagents (e.g., hydrochloric acid, sulfamic acid, sulfuric acid, phosphoric acid, hydroxyacetic acid, acetic acid, citric acid, oxalic acid, ascorbic acid, hydrogen peroxide, sodium hypochlorite, sodium hydroxide, chlorine dioxide, potassium hydroxide, polyphosphate, Aqua Clear™ PFD, Rodine-103/Rodine 213, QC-21, CB4, NuWell 120, NuWell 130, nitrogen, and carbon dioxide). These materials

will be brought onsite during the well maintenance/rehabilitation activities, but will not be permanently stored on site

- Remedy-produced water with pH<2 (from well maintenance activities)
- Oil used for pumps and equipment
- Used oil hazardous waste
- Solvents used for pumps and equipment
- Used solvents hazardous waste
- Laboratory reagents and waste
- Compressed gas cylinders
- Universal waste

In addition, chemicals that are anticipated to be used in remedy processes and stored onsite are listed below with locations (the precise locations may change over time and will be reflected in updates to the HMBPs):

- Potential chemicals to be used and stored in the Remedy-produced Water Conditioning Building (located inside the Compressor Station) include the following:
  - Caustic (e.g., sodium hydroxide), to be stored in a 550-gallon tank
  - Acid (e.g., hydrochloric acid), to be stored in a 550-gallon tank
  - A coagulant (e.g., Nalco Ultrion 8187 [aluminum chloride hydroxide]; coagulants were evaluated in jar tests by Nalco Company, Long Beach, California. Several coagulants were screened and coagulant Nalco Ultrion 8187 proved to be the most effective for aiding in settling solids in the Conditioning System (see Appendix G for a summary of the jar test results).
  - A flocculent addition (e.g., Nalco® 7878 Flocculant [anionic type]; flocculents were evaluated in jar tests by Nalco Company, Long Beach, California. Several flocculents were screened and flocculent Nalco 7878 proved to be the most effective to aid in the dewatering of the influent tank bottoms prior to pumping to the liquid phase separators (see Appendix G for a summary of the jar test results). The coagulant was very effective, so the need for this dewatering aid and flocculent type would have to be tested during operations.
  - Laboratory reagents (to be used in a small lab inside the conditioning building) and related waste
  - Compressed gas cylinders
- Potential chemicals to be used and stored in the carbon amendment facilities include:
  - Carbon substrate (95 percent ethanol) - located at the MW-20 Bench (15,000-nominal gallon tank)
  - Acids, caustics, and/or dispersants for use in the Clean-In-Place system at the MW-20 Bench (330-gallon totes or smaller-volume drums). Potential chemical reagents for use in the CIP system may include hydrochloric, glycolic (hydroxyacetic), and phosphoric acids, sodium hydroxide, and hydrogen peroxide
  - Compressed gas cylinders
- Potential hazardous materials/wastes related to the groundwater remedy and stored in the Hazardous Materials Storage Building (located inside the Compressor Station; see Figure 2.1-1) include:
  - Chemicals, hazardous materials, and wastes listed above with the exception of ethanol.
  - Universal waste
  - Compressed gas cylinders

- Potential hazardous materials/wastes to be used in remedy processes and stored at the main construction headquarter and the long-term remedy support area at Moabi Regional Park include:
  - Laboratory reagents (to be used in an onsite laboratory) and related waste
  - Cleaning solutions including solvents used for pumps and equipment
  - Oil used for pumps and equipment
  - Used oil hazardous waste
  - Used solvents hazardous waste
  - Universal waste
  - Compressed gas cylinders

Hazardous materials staged, stored and/or handled at the Remedy-produced Water Conditioning Plant, the Hazardous Materials Storage Building inside the Compressor Station, and the Transwestern Bench will be incorporated into the existing HMBP for the Compressor Station. All hazardous materials stored and handled at remedy facilities located outside of the Compressor Station will be incorporated into the existing HMBP for the IM-3 Treatment Plant. PG&E will submit these HMBPs to San Bernardino County. Both of the current HMBPs are included in Appendix E of this O&M Plan. These HMBPs will be updated for submittal to San Bernardino County when required by HMBP guidance (i.e., after new hazardous materials are on site or qualifying facility modifications require HMBP updates).

7.3 Fuel Storage and Fueling Practices

Types of fuel anticipated to be used onsite include:

- **Diesel Fuel** that meets California low-sulfur standards and regulations. There is a bulk diesel fuel tank in place at the TCS that may be used by PG&E and its contractors conducting remedy activities for re-fueling vehicles and equipment. In addition, re-fueling using diesel from an offsite source is also an option.
- **Gasoline** that meets California's reformulated gasoline (CaRFG) program standards and regulations. There will be no bulk storage of gasoline onsite; however, it is anticipated that pickup truck mounted gasoline storage tanks will be used to transport fuel to the site and re-fuel equipment on site.

Over the decades-long O&M period, it is anticipated that alternative fuels may be considered for onsite use including, but not limited to, bio fuels, ethanol, etc. In addition, bulk fuel storage methods may change to support future remedy needs.

Regardless, the project will comply with local, state, and federal regulations related to the bulk storage and management of fuels. Specifically, the HMBPs (Appendix E) and the fueling SOP (Remedy-SOP-02 in Appendix F) include information regarding consideration for properly storing and handling fuel on-site, equipment and procedures for spill containment, personal protective equipment, and the measures to be used to reduce the likelihood of releases or spills during fueling or vehicle maintenance activities.

7.4 Access Road and Pathway Maintenance

Figures 7.4-1A and 7.4-1B show existing access routes that will continue to be used for remedy activities, existing routes proposed to be used as is for access for remedy activities, and roads to be improved or constructed for the groundwater remedy. Note that public roadways outside of the EIR project area or APE will also be used for the groundwater remedy.

Over time, the access roads and pathways are likely to exhibit deterioration and/or overgrowth, and will require maintenance for safety, and for ensuring access to as well as protection of remedy infrastructure and facilities. Depending on the road or pathway surface and condition, the proper maintenance method(s) will be different. Typically, road maintenance consists of stabilizing disturbed areas, filling/re-grading, and pruning overgrowth. General guidelines for road and pathway maintenance are outlined in this plan.

Once it is determined that a road or pathway must be maintained, an initial assessment including a review of potential causes for deterioration will be completed. Based on the initial assessment, an appropriate method for maintenance will be conducted. Exhibit 7.4-1 presents a general summary of road and pathway maintenance methods.

EXHIBIT 7.4-1
Summary of Roads and Pathways BMPs
Groundwater Remedy Operation and Maintenance Manual
Volume 1: Operation and Maintenance Plan
PG&E Topock Compressor Station, Needles, California

Type of Road or Pathway	Surface	Potential Deterioration Conditions	Solutions	Effective BMPs[1]
Footpath	Loose Dirt	• Shrub overgrowth • Erosion	• Pruning • Soil stabilization	• Pruning of overgrowth using hand or mechanical-powered tools • Stabilize disturbed areas by applying approved soil stabilizing agents[2], erosion control matting, silt fencing, etc.
Access Road	Loose Dirt	• Erosion • Subsidence • Soft spots	• Re-establish road surface • Re-grade road surface • Soil stabilization • Erosion control/ restoration	• Re-establish road surface using manual shovel/ rake or backhoe • Re-grade road surface using grader • Stabilize disturbed areas by applying approved soil stabilizing agents[2], erosion control matting, installing silt fencing, water bars, etc. • Inspect, clean, and maintain ditch/culvert • Reshape ditch, install turnouts/diversion berm if needed, to improve flow capacity
Access Road	Compact Dirt	• Erosion • Subsidence • Soft spots • Pot holes	• Re-establish road surface • Re-grade road surface • Soil stabilization • Erosion control/ restoration	• Re-establish road surface using manual shovel/rake or backhoe • Re-grade road surface using grader • Stabilize disturbed areas by applying approved soil stabilizing agents[2], erosion control matting, installing silt fencing, water bars, etc. • Inspect, clean, and maintain ditch/culvert • Reshape ditch, install turnouts/diversion berm if needed, to improve flow capacity • Repair/rebuild culvert
Access Road	Compact Gravel	• Erosion • Subsidence • Soft spots • Pot holes	• Add minor gravel • Add major gravel • Re-establish road surface • Re-grade road surface • Erosion control/ restoration	• Re-establish road surface using manual shovel/rake or backhoe • Re-grade road surface using grader • Stabilize disturbed areas by applying approved soil stabilizing agents[2], erosion control matting, installing silt fencing, water bars, etc. • Inspect, clean, and maintain ditch/culvert • Reshape ditch, install turnouts/diversion berm if needed, to improve flow capacity • Repair/rebuild culvert
Access Road	Paved asphalt/ concrete	• Cracks • Potholes • Erosion • Subsidence • Pot holes	• Patch • Fill • Re-pave • Erosion control/ restoration	• Repair road to existing grade using asphalt/ concrete paving equipment, backhoe, grader, etc. • Inspect, clean, and maintain ditch/culvert • Reshape ditch, install turnouts/diversion berm if needed, to improve flow capacity • Repair/rebuild culvert

EXHIBIT 7.4-1
Summary of Roads and Pathways BMPs
Groundwater Remedy Operation and Maintenance Manual
Volume 1: Operation and Maintenance Plan
PG&E Topock Compressor Station, Needles, California

Type of Road or Pathway	Surface	Potential Deterioration Conditions	Solutions	Effective BMPs[1]

Note:

[1] Source: Massachusetts Unpaved Roads BMP Manual (Berkshire Regional Planning Commission 2001)

[2] List of potential soil stabilizing agents that may be used for the project include SoilTac (approved for use during and after the AOC 4 Time Critical Removal Action [CH2M HILL 2009]), PM10-50 (used at Hinkley Compressor Station), Gorilla-Snot, etc. Future commercially available products with comparable functionality may also be used, as appropriate.

7.5 Vegetation Control for Maintenance of Wireless Infrastructure

Wireless communication is used in the groundwater remedy, where feasible, to minimize the need for installation of hard wires and conduits. Certain wireless device requires clear line of sight for proper operation. The sites where such devices are located will be inspected on a periodic basis and overgrowth will be pruned or managed (e.g., tie back, bundle, etc.) to maintain clear lines of sight. Care will be taken to ensure that vegetation control measures are consistent with the project mitigation directives such as the protection of mature plants (EIR mitigation measures AES-1a and AES-2b) and the avoidance/protection of ethnobotanical sensitive plants (EIR mitigation measure CUL-1a-5) (DTSC 2011). In addition, vegetation control measures will be consistent with the project's revegetation plans (e.g., the Aesthetics and Visual Resources Revegetation Plan, the Habitat Restoration Plan for Riparian Vegetation and Other Sensitive Habitats, and the HNWR Habitat Restoration Plan) and future restoration plans.

7.6 Maintenance of Small Solar Panels

This section describes general preventive maintenance elements of small stand-alone solar photovoltaic systems including the care of batteries, solar panels, wiring and loads. See also SOP PWR-SOP-02 in Appendix B for additional details.

Battery Maintenance. A battery is a device which is used to store electrical charge. Batteries should be regularly and carefully maintained to extend their useful life. These activities include:

- Visually inspect and clean regularly - check for any electrolyte leak, cracks in the batteries, or corrosion at the terminals or connectors.
- Keep in a high state of charge
- Ensure the proper fluid level is maintained for all non-sealed batteries.

Solar Panel Maintenance. The solar panels are often thought to be maintenance-free. However, occasional maintenance and inspection of the solar panels must be performed to ensure optimal use. This can be done by keeping the surface (glass) area of the panel clean from any excess dirt.

- Remove dust and dirt from the panels. Do not use any abrasives which can damage the panel. Refer to the panel manufacturer for proper cleaning procedures.
- Visually inspect to check for defects such as cracks, chips, de-lamination, discoloration, etc. – note condition of panels including the mounting bolts (e.g., bolt rusting) and check to ensure that the frame and modules are firmly secured. Check junction boxes to ensure that the wires are not chewed by rodents or insects and that no excessive moisture or corrosion is present.

Inverter/Battery Charger and Charge Controller. This component can be maintained by minimizing dust accumulation. Use a dry cloth to wipe away any accumulated dirt/dust. Conduct visual inspection to ensure that all the indicators such as LED lights are working and that the wires leading to and from this device are not loose or damaged. Note that the charge controller should indicate that the system is charging when the sun is up.

Wiring and Connections. Check wiring installations for any cracks, breaks or deterioration in the insulation. Inspect junction boxes to ensure that they have not become a home for rodents and insects and that no excessive moisture is present. Also inspect connections for evidence of corrosion. The following sections of conduit and wiring should be checked for any signs of damage:

- Solar panels to the charge controller
- Charge controller to the battery bank
- Inverter/charger to the battery bank
- Generator to inverter/charger
- Inverter/charger and generator to the AC outlets
- Battery bank to the DC outlets/load
- All ground wires should be checked to ensure they are not damaged.

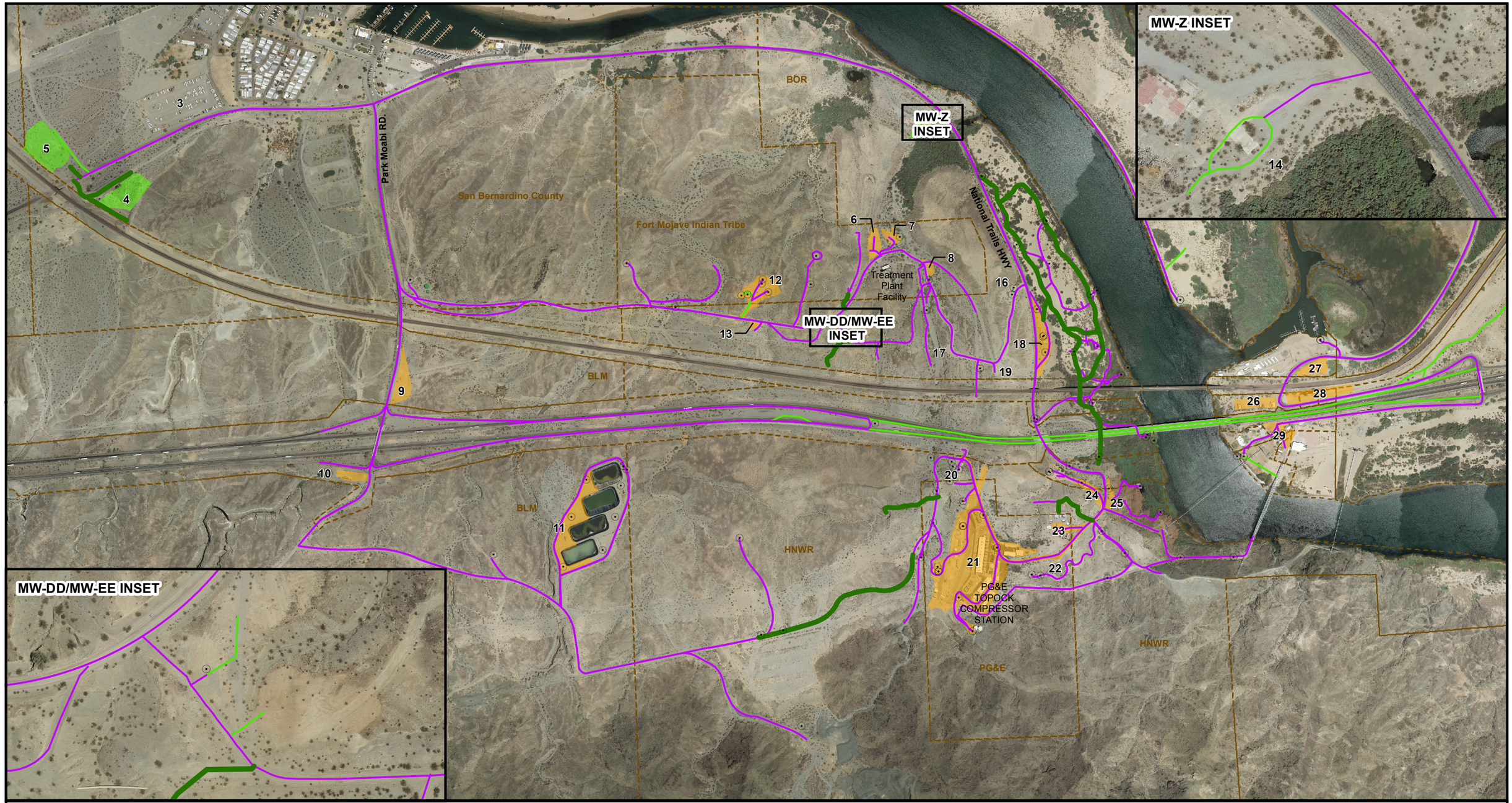

LEGEND

- Existing Well
- Existing Access Route (will continue to be used for remedial activities)
- Existing Route (proposed to be used as is for access to remedial activities)
- Roads to be Improved or Constructed for Remedy Use
- Proposed Soil Processing (Area #5) and Construction Headquarter (Area #4) for Remediation Project
- Proposed Staging Areas for Remediation Project (see BOD Table 3.5-1 for description of use of staging areas)

Notes:
1. Locations for access routes are approximate.
2. Public roadways outside of the EIR project area and the APE can also be used for remedy implementation.

FIGURE 7.4-1A
PROPOSED ACCESS ROUTES FOR REMEDY FEATURES - CALIFORNIA
GROUNDWATER REMEDY OPERATION AND MAINTENANCE MANUAL
VOLUME 1: OPERATION AND MAINTENANCE PLAN
PG&E TOPOCK COMPRESSOR STATION
NEEDLES, CALIFORNIA

CH2MHILL

County Highway 10

BNSF Railroad

40

VICINITY MAP

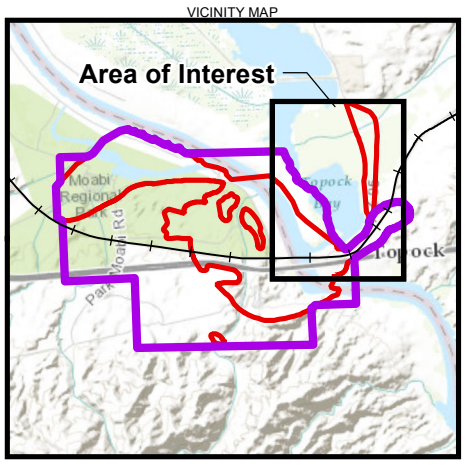

LEGEND

- Roads to be Improved or Constructed for Groundwater Remedy
- Existing Route (proposed to be used as is for access to remedial activities)
- Existing Access Route (will continue to be used for remedial activities)
- Proposed Staging Areas for Remediation Project (see BOD Table 3.5-1 for a description of proposed use for staging areas)

N

0 200 400 800 Feet

Notes:
1. Locations for access routes are approximate.
2. Public roadways outside of the EIR project area and the APE can also be used for remedy implementation.

Service Layer Credits: Sources: Esri, HERE, DeLorme, Intermap, increment P Corp., GEBCO, USGS, FAO, NPS, NRCAN, GeoBase, IGN, Kadaster NL, Ordnance Survey, Esri Japan, METI, Esri China (Hong Kong), swisstopo, MapmyIndia, © OpenStreetMap contributors, and the GIS User Community

FIGURE 7.4-1B
PROPOSED ACCESS ROUTES FOR REMEDY FEATURES - ARIZONA
GROUNDWATER REMEDY OPERATION AND MAINTENANCE MANUAL
VOLUME 1: OPERATION AND MAINTENANCE PLAN
PG&E TOPOCK COMPRESSOR STATION
NEEDLES, CALIFORNIA

CH2MHILL

Path: R:\PGEAlliance\Topock\MapFiles\2015\CMS\100PercentDesign\Fig_7.41B.mxd

SECTION 8

References

Alford, George, and Roy Cullimore. 1998. *The Application of Heat and Chemicals in the Control of Biofouling Events in Wells*. Boca Raton, Florida: CRC Press, Lewis Publishers.

Berkshire Regional Planning Commission. 2001. *The Massachusetts Unpaved Roads BMP Manual.* Prepared for Massachusetts Department of Environmental Protection/Bureau of Resource Protection and U.S. Environmental Protection Agency Region 1. Project 98-06/319. Online: http://www.berkshireplanning.org/download/dirt_roads.pdf.

California Department of Toxic Substances Control (DTSC). 1996. *Corrective Action Consent Agreement (Revised), Pacific Gas and Electric Company's Topock Compressor Station, Needles, California.* EPA ID No. CAT080011729. February 2.

_____. 2011. *Final Environmental Impact Report for the Topock Compressor Station Groundwater Remediation Project*. Prepared for the California Department of Toxic Substances Control. January.

CH2M HILL. 2009. *Work Plan for Time-Critical Removal Action at AOC4, Pacific Gas and Electric Company, Topock Compressor Station, Needles, California.* December.

_____. 2015. *Construction/Remedial Action Work Plan for the Final Groundwater Remedy, PG&E Topock Compressor Station, Needles, California.* November 18.

Driscoll, Fletcher G. 1986. *Groundwater and Wells*. Second Edition. St. Paul, Minnesota: Johnson Screens.

Houben, Georg, and Christoph Treskatis. 2007. *Water Well Rehabilitation and Reconstruction*. New York: McGraw Hill.

Hutchinson, A., and R. Randall. 1997. "Estimation of Injection Well Clogging with the Modified Fouling Index (MFI)." *Artificial Recharge of Groundwater II*. American Society of Civil Engineers.

Mansuy, Neil. 1999. *Water Well Rehabilitation: A Practical Guide to Understanding Well Problems and Solutions*. Boca Raton, Florida: CRC Press, Lewis Publishers.

Nalco. 2014. Letter to John Porcella/CH2M HILL transmitted by email from Andrew Godfrey/Nalco. February 5.

Pelzer, R., and S.A. Smith. 1990. "Eucastream Suction Flow Control Devise: An Element for Optimization of Flow Conditions in Wells." Water Wells: Monitoring, Maintenance, Rehabilitation, Proceedings of the International Groundwater Engineering Conference. Edited by P. Howsam. London: E&FN Spon.

Smith, Stuart A. 2007. *Recent Innovations in Well Rehabilitation*. Original version presented at el XV Congreso Nacional del Aqua, La Plata, Argentina, in April 1994.

U.S. Department of the Interior (DOI). 2010. *Groundwater Record of Decision, Pacific Gas and Electric Company, Topock Compressor Station, Needles, San Bernardino County, California*. ROD cover date is December 2010; signed/approved by DOI on January 20, 2011.

_____.2013. Remedial Action/Remedial Design Consent Decree (CD) between the United States of America and Pacific Gas & Electric Company. Case 5:13-cv-00074-BRO-OP, Document 23. Entered November 21.

Appendix A
Referenced Drawings

APPENDIX A

Referenced Drawings

This appendix contains the following engineering drawings that are referenced in this O&M Plan for the Final Groundwater Remedy at Topock Compressor Station. For a complete set of all project drawings, see Appendix D, Plans (Engineering Drawings), in the Final Basis of Design Report.

- I-01-01 P&ID FRESH WATER SUPPLY WELLS
- I-02-01 P&ID FRESH WATER TANK
- I-02-02 P&ID INJECTION WELL
- I-03-01 TCS LOOP EAST RAVINE EXTRACTION WELLS P&ID
- I-03-02 TCS LOOP TRANSWESTERN BENCH EXTRACTION WELLS P&ID
- I-03-03 TCS LOOP INJECTION WELLS P&ID
- I-04-01 IRZ SINGLE SCREEN EXTRACTION WELLS P&ID
- I-04-02 IRZ DUAL SCREEN EXTRACTION WELLS P&ID
- I-04-03 IRZ SINGLE SCREEN INJECTION WELLS P&ID
- I-04-04 IRZ DUAL SCREEN INJECTION WELLS P&ID
- I-04-05 IRZ DUAL SCREEN CLUSTER INJECTION WELLS P&ID SHEET 1 OF 2
- I-04-06 IRZ DUAL SCREEN CLUSTER INJECTION WELLS P&ID SHEET 2 OF 2
- I-05-01 INNER RECIRCULATION LOOP EXTRACTION WELLS P&ID
- I-05-02 INNER RECIRCULATION LOOP TYPE 1 INJECTION WELLS P&ID
- I-05-03 INNER RECIRCULATION LOOP TYPE 2 INJECTION WELLS P&ID
- I-06-01 MW-20 BENCH CARBON AMENDMENT BUILDING P&ID SHEET 1 OF 4
- I-06-02 MW-20 BENCH CARBON AMENDMENT BUILDING P&ID SHEET 2 OF 4
- I-06-03 MW-20 BENCH CARBON AMENDMENT BUILDING P&ID SHEET 3 OF 4
- I-06-04 MW-20 BENCH CARBON AMENDMENT BUILDING P&ID SHEET 4 OF 4
- I-11-01 P&ID INFLUENT TANK 1
- I-11-02 P&ID INFLUENT TANK 2
- I-11-03 P&ID INFLUENT TANK 3
- I-11-04 P&ID INFLUENT TANK 4
- I-12-01 P&ID FILTER SYSTEM A SIDE
- I-12-02 P&ID FILTER SYSTEM B SIDE
- I-12-03 P&ID CAUSTIC AND COAGULANT SYSTEM
- I-12-04 P&ID ACID AND DEWATERING AID SYSTEMS
- I-12-05 P&ID LIQUID PHASE SEPARATOR & AIR COMPRESSOR
- I-14-01 P&ID CONDITIONED WATER STORAGE TANK FARM A SIDE
- I-14-02 P&ID CONDITIONED WATER B SIDE
- M-03-01 TCS LOOP EXTRACTION WELL CONSTRUCTION DETAILS
- M-03-02 TCS LOOP INJECTION WELL CONSTRUCTION DETAILS
- M-04-01 IRZ EXTRACTION WELL CONSTRUCTION DETAILS
- M-04-02 IRZ INJECTION WELL CONSTRUCTION DETAILS
- M-05-01 INNER RECIRCULATION LOOP EXTRACTION WELL CONSTRUCTION DETAILS
- M-05-02 INNER RECIRCULATION LOOP TYPE 1 INJECTION WELL CONSTRUCTION DETAILS
- M-05-03 INNER RECIRCULATION LOOP TYPE 2 INJECTION WELL CONSTRUCTION DETAILS
- M-06-04 IRZ CARBON SUBSTRATE STORAGE TANK MECHANICAL DETAILS

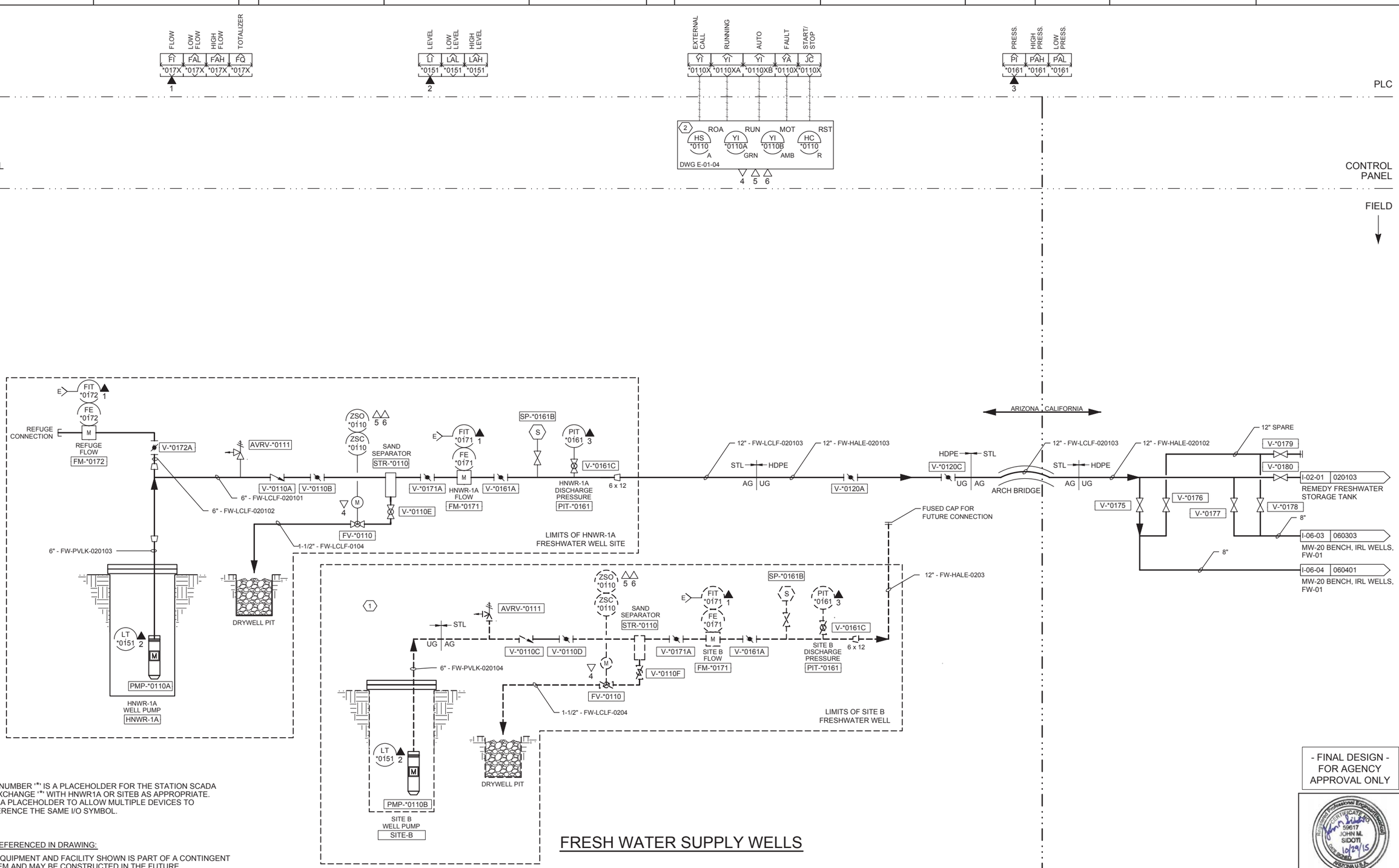

FRESH WATER SUPPLY WELLS

NOTES:
1. TAG NUMBER '*' IS A PLACEHOLDER FOR THE STATION SCADA ID. EXCHANGE '*' WITH HNWR1A OR SITEB AS APPROPRIATE.
2. 'X' IS A PLACEHOLDER TO ALLOW MULTIPLE DEVICES TO REFERENCE THE SAME I/O SYMBOL.

NOTES REFERENCED IN DRAWING:
1. THE EQUIPMENT AND FACILITY SHOWN IS PART OF A CONTINGENT SYSTEM AND MAY BE CONSTRUCTED IN THE FUTURE.

- FINAL DESIGN - FOR AGENCY APPROVAL ONLY

Registered Professional Engineer (Civil) CERTIFICATE NO. 59617 JOHN M. SIDOTI 10/29/15 DATE SIGNED ARIZONA U.S.A. Exp. 3-31-18

ETIC ENGINEERING

ARCADIS

NO.	DATE	DESCRIPTION	GM/SPEC	DWN	CHKD	SUPV	APVD BY
2	11/18/15	FINAL DESIGN		AJW	JPB	JMS	RAO
1	9/8/14	PRE-FINAL (90%) DESIGN		MBY			TPF
0	4/5/13	INTERMEDIATE (60%) DESIGN		MBY			TPF

REVISIONS

APPROVED BY: RAO

SO / SUPV / DSGN / DWN / CHKD / OK / DATE / SCALES

TOPOCK GROUNDWATER REMEDIATION PROJECT

P&ID
FRESH WATER SUPPLY WELLS

GAS TRANSMISSION & DISTRIBUTION
PACIFIC GAS AND ELECTRIC COMPANY
SAN FRANCISCO, CALIFORNIA

MICROFILM
BILL OF MATL
DWG LIST
SUPSDS
SUPSD BY
SHEET NO. of SHEETS
I-01-01
REV 2

11/02/2015, 13:52, G:\Graphics\AR\TOPOCK-01\Submittal_100%\DWGs\I-Instrumentation\I-01-01.dwg, Tab: I-01-01

N1808

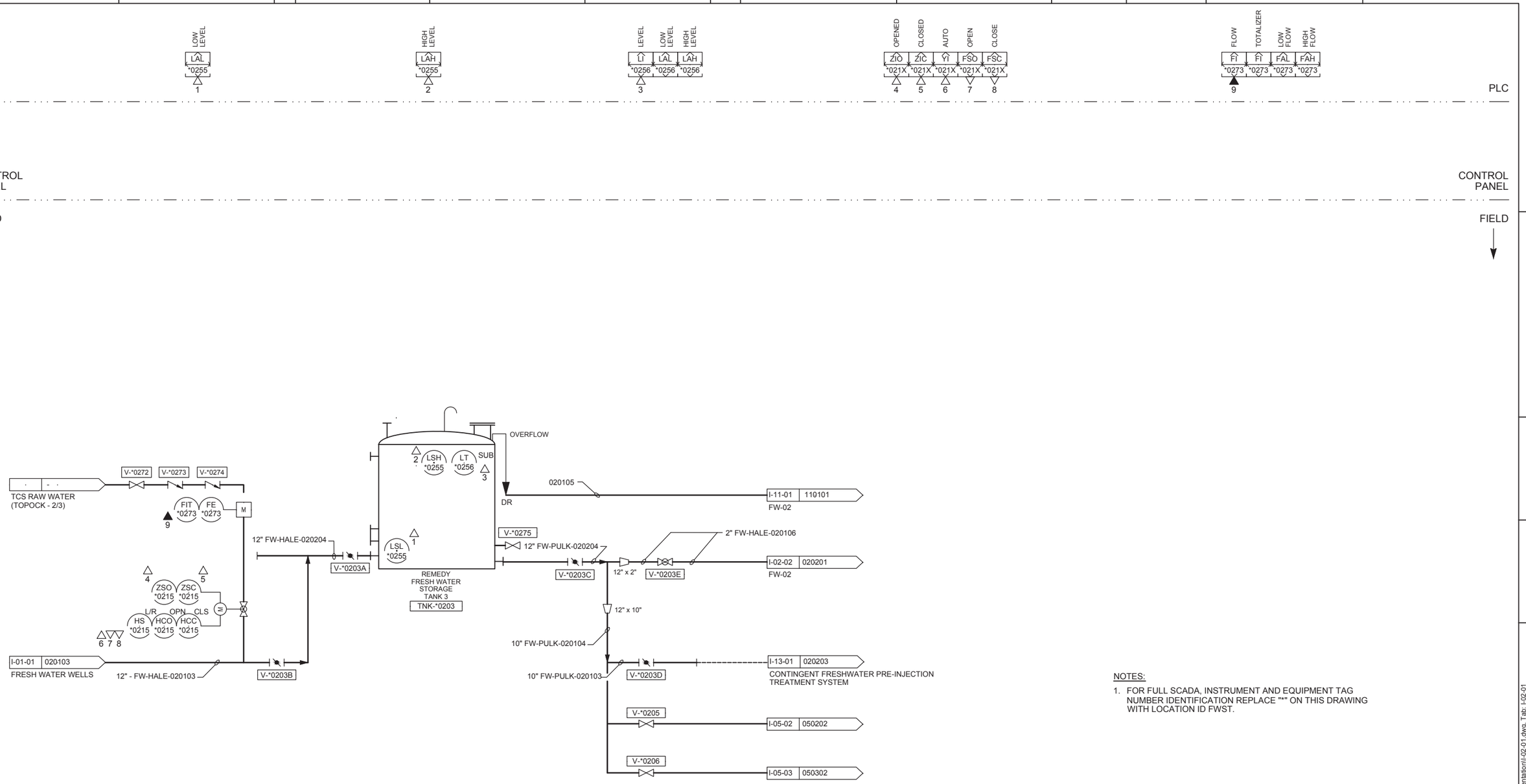

NOTES:

1. FOR FULL SCADA, INSTRUMENT AND EQUIPMENT TAG NUMBER IDENTIFICATION REPLACE "*" ON THIS DRAWING WITH LOCATION ID FWST.

- FINAL DESIGN - FOR AGENCY APPROVAL ONLY

REGISTERED PROFESSIONAL ENGINEER
JOANNE CAMPBELL
No. C 072178
Exp 06/30/16
CIVIL
STATE OF CALIFORNIA

ETIC ENGINEERING

ARCADIS

NO.	DATE	DESCRIPTION	GM/SPEC	DWN	CHKD	SUPV	APVD BY
2	11/18/15	FINAL DESIGN		AJW	JPB	DAC	RAO
1	9/8/14	PRE-FINAL (90%) DESIGN		MBY			TPF
0	4/5/13	INTERMEDIATE (60%) DESIGN		MBY			TPF

REVISIONS

APPROVED BY	SO
RAO	SUPV
	DSGN
	DWN
	CHKD
	OK
	DATE
	SCALES

TOPOCK GROUNDWATER REMEDIATION PROJECT

P&ID
FRESHWATER TANK

GAS TRANSMISSION & DISTRIBUTION
PACIFIC GAS AND ELECTRIC COMPANY
SAN FRANCISCO, CALIFORNIA

MICROFILM	
BILL OF MATL	
DWG LIST	
SUPSDS	
SUPSD BY	
SHEET NO.	of SHEETS
I-02-01	REV 2

11/03/2015, 17:13, G:\Graphics\ARI\TOPOCK-01\Submittal_100%\DWG\s\I-Instrumentation\I-02-01.dwg, Tab: I-02-01

N1808

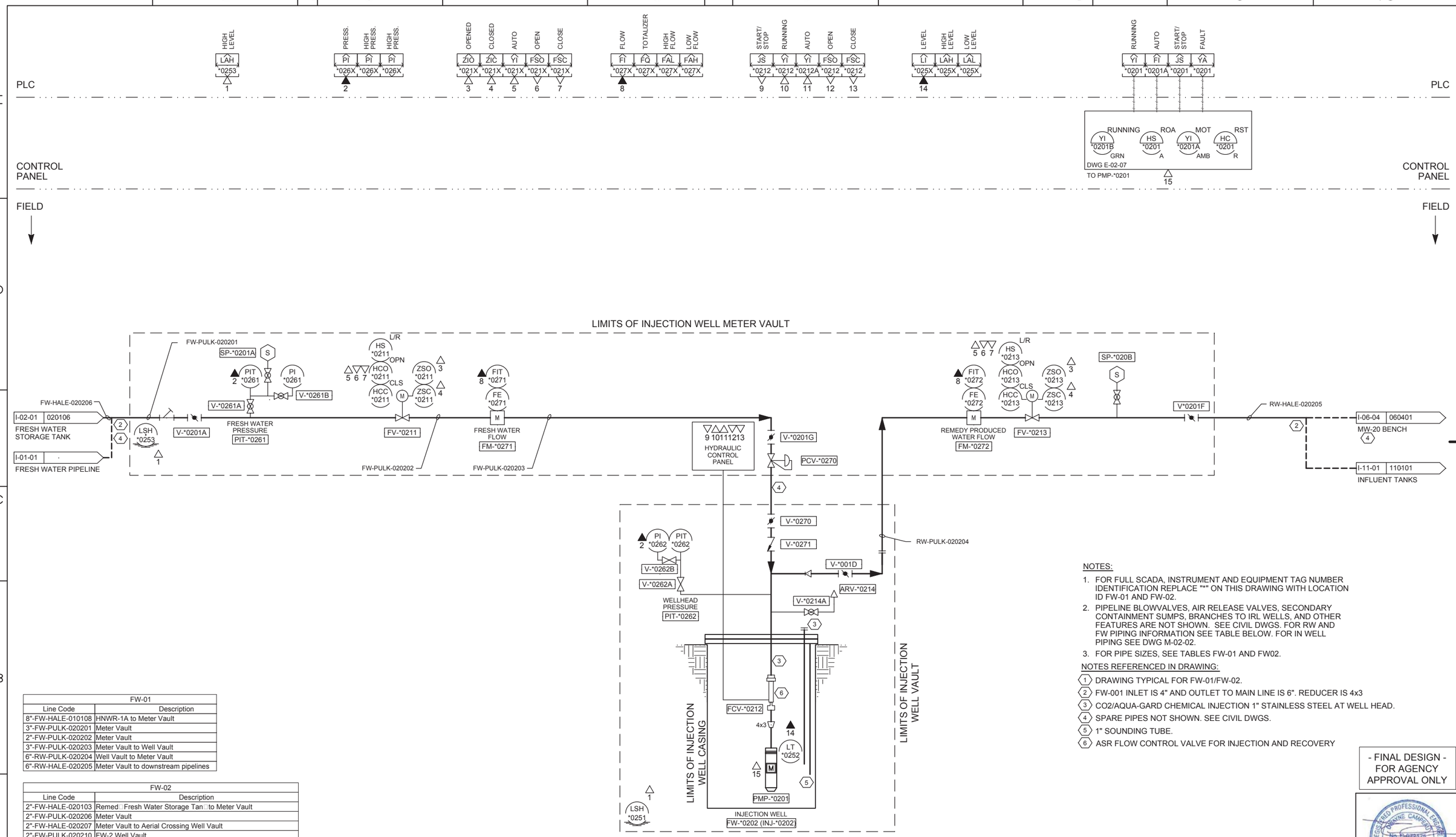

NOTES:

1. FOR FULL SCADA, INSTRUMENT AND EQUIPMENT TAG NUMBER IDENTIFICATION REPLACE "*" ON THIS DRAWING WITH LOCATION ID FW-01 AND FW-02.
2. PIPELINE BLOWVALVES, AIR RELEASE VALVES, SECONDARY CONTAINMENT SUMPS, BRANCHES TO IRL WELLS, AND OTHER FEATURES ARE NOT SHOWN. SEE CIVIL DWGS. FOR RW AND FW PIPING INFORMATION SEE TABLE BELOW. FOR IN WELL PIPING SEE DWG M-02-02.
3. FOR PIPE SIZES, SEE TABLES FW-01 AND FW02.

NOTES REFERENCED IN DRAWING:

1. DRAWING TYPICAL FOR FW-01/FW-02.
2. FW-001 INLET IS 4" AND OUTLET TO MAIN LINE IS 6". REDUCER IS 4x3
3. CO2/AQUA-GARD CHEMICAL INJECTION 1" STAINLESS STEEL AT WELL HEAD.
4. SPARE PIPES NOT SHOWN. SEE CIVIL DWGS.
5. 1" SOUNDING TUBE.
6. ASR FLOW CONTROL VALVE FOR INJECTION AND RECOVERY

FW-01	
Line Code	Description
8"-FW-HALE-010108	HNWR-1A to Meter Vault
3"-FW-PULK-020201	Meter Vault
2"-FW-PULK-020202	Meter Vault
3"-FW-PULK-020203	Meter Vault to Well Vault
6"-RW-PULK-020204	Well Vault to Meter Vault
6"-RW-HALE-020205	Meter Vault to downstream pipelines

FW-02	
Line Code	Description
2"-FW-HALE-020103	Remed□Fresh Water Storage Tan□to Meter Vault
2"-FW-PULK-020206	Meter Vault
2"-FW-PULK-020207	Meter Vault to Aerial Crossing Well Vault
2"-FW-PULK-020210	FW-2 Well Vault
4"-RW-PULK-020211	FW-2 Well Vault
4"-RW-HALE-020212	Well Vault to Meter Vault
4"-RW-PULK-020215	Meter Vault
4"-RW-HALE-020216	Meter Vault to In□uent Tan□Farm

- FINAL DESIGN - FOR AGENCY APPROVAL ONLY

REGISTERED PROFESSIONAL ENGINEER JOHNNIE CAMPBELL No. 15-072176 Exp 06/30/16 CIVIL STATE OF CALIFORNIA

NO.	DATE	DESCRIPTION	GM/SPEC	DWN	CHKD	SUPV	APVD BY
3	11/18/15	FINAL DESIGN		AJW	JPB	DAC	RAO
2	12/30/14	SUPPLEMENTAL PRE-FINAL (90%) DESIGN		MBY			TPF
1	9/8/14	PRE-FINAL (90%) DESIGN		MBY			TPF
0	4/5/13	INTERMEDIATE (60%) DESIGN		MBY			TPF

REVISIONS

APPROVED BY	
RAO	SO
	SUPV
	DSGN
	DWN
	CHKD
	OK
	DATE
	SCALES

TOPOCK GROUNDWATER REMEDIATION PROJECT

P&ID
INJECTION WELL
GAS TRANSMISSION & DISTRIBUTION
PACIFIC GAS AND ELECTRIC COMPANY
SAN FRANCISCO, CALIFORNIA

MICROFILM	
BILL OF MATL	
DWG LIST	
SUPSDS	
SUPSD BY	
SHEET NO.	of SHEETS
I-02-02	REV 3

11/03/2015, 17:13, G:\Graphics\ARI\TOPOCK-01\Submittal_100%\DWGs\I-Instrumentation\I-02-02.dwg, Tab: I-02-02

N1808

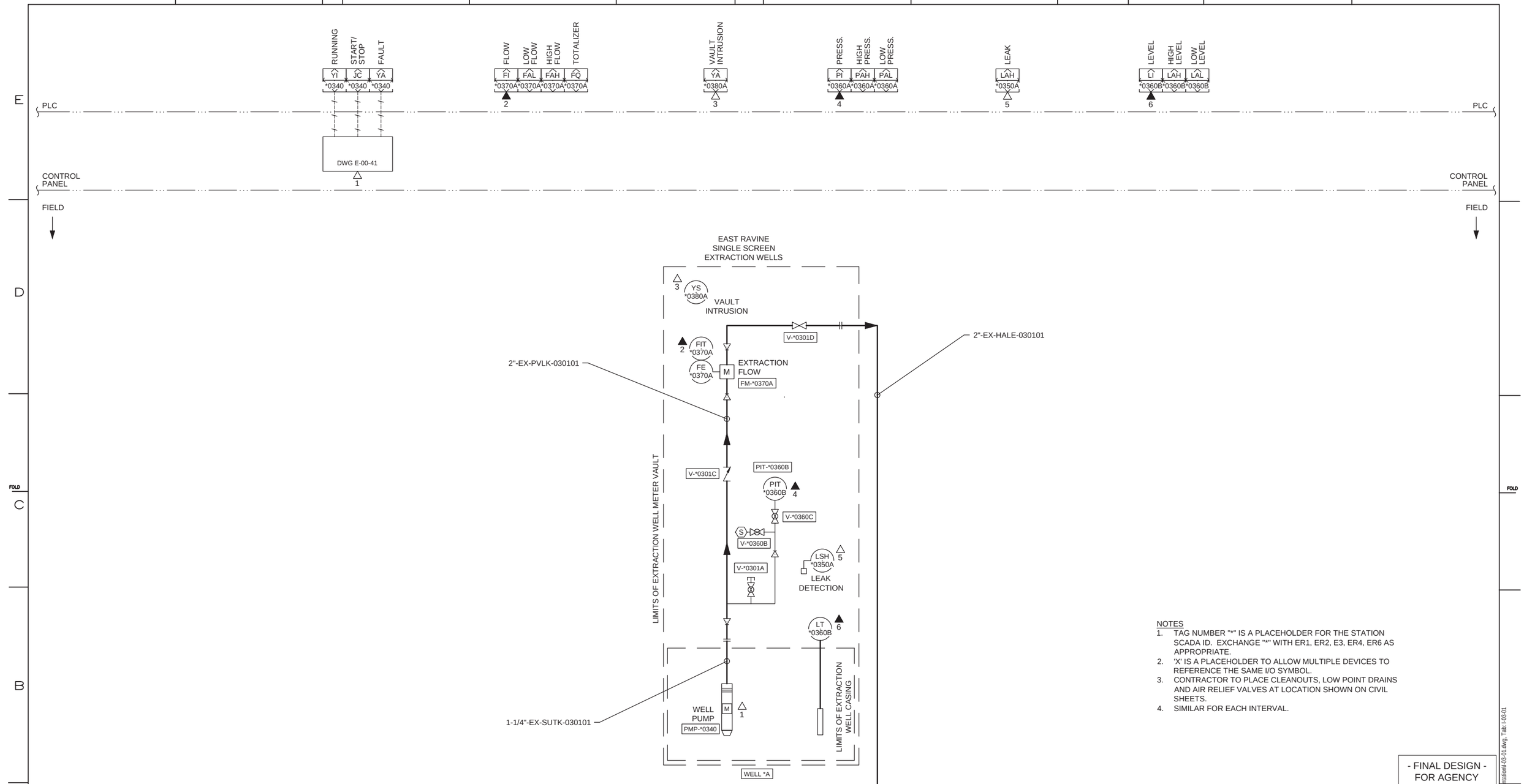

NOTES
1. TAG NUMBER "*" IS A PLACEHOLDER FOR THE STATION SCADA ID. EXCHANGE "*" WITH ER1, ER2, E3, ER4, ER6 AS APPROPRIATE.
2. 'X' IS A PLACEHOLDER TO ALLOW MULTIPLE DEVICES TO REFERENCE THE SAME I/O SYMBOL.
3. CONTRACTOR TO PLACE CLEANOUTS, LOW POINT DRAINS AND AIR RELIEF VALVES AT LOCATION SHOWN ON CIVIL SHEETS.
4. SIMILAR FOR EACH INTERVAL.

- FINAL DESIGN - FOR AGENCY APPROVAL ONLY

REGISTERED PROFESSIONAL ENGINEER — DWAYNE CAMPBELL — No. C 67217 — Exp 06/30/16 — CIVIL — STATE OF CALIFORNIA

NO.	DATE	DESCRIPTION	GM/SPEC	DWN	CHKD	SUPV	APVD BY
2	11/18/15	FINAL DESIGN		AJW	JPB	DAC	RAO
1	09/08/14	PRE-FINAL (90%) DESIGN		MS	MWM	JPB	JEF
0	04/05/13	INTERMEDIATE (60%) DESIGN		MS	MWM	JPB	JEF

REVISIONS

ETIC ENGINEERING

ARCADIS

N1808

APPROVED BY	
	SO
RAO	SUPV
	DSGN
	DWN
	CHKD
	OK
	DATE
	SCALES

TOPOCK GROUNDWATER REMEDIATION PROJECT

TCS LOOP EAST RAVINE EXTRACTION WELLS P&ID

GAS TRANSMISSION & DISTRIBUTION
PACIFIC GAS AND ELECTRIC COMPANY
SAN FRANCISCO, CALIFORNIA

MICROFILM	
BILL OF MATL	
DWG LIST	
SUPSDS	
SUPSD BY	
SHEET NO.	of SHEETS
I-03-01	REV 2

11/03/2015, 17:14, G:\Graphics\AR\TOPOCK-001\Submittal_100%\DWGs\I-Instrumentation\I-03-01.dwg, Tab: I-03-01

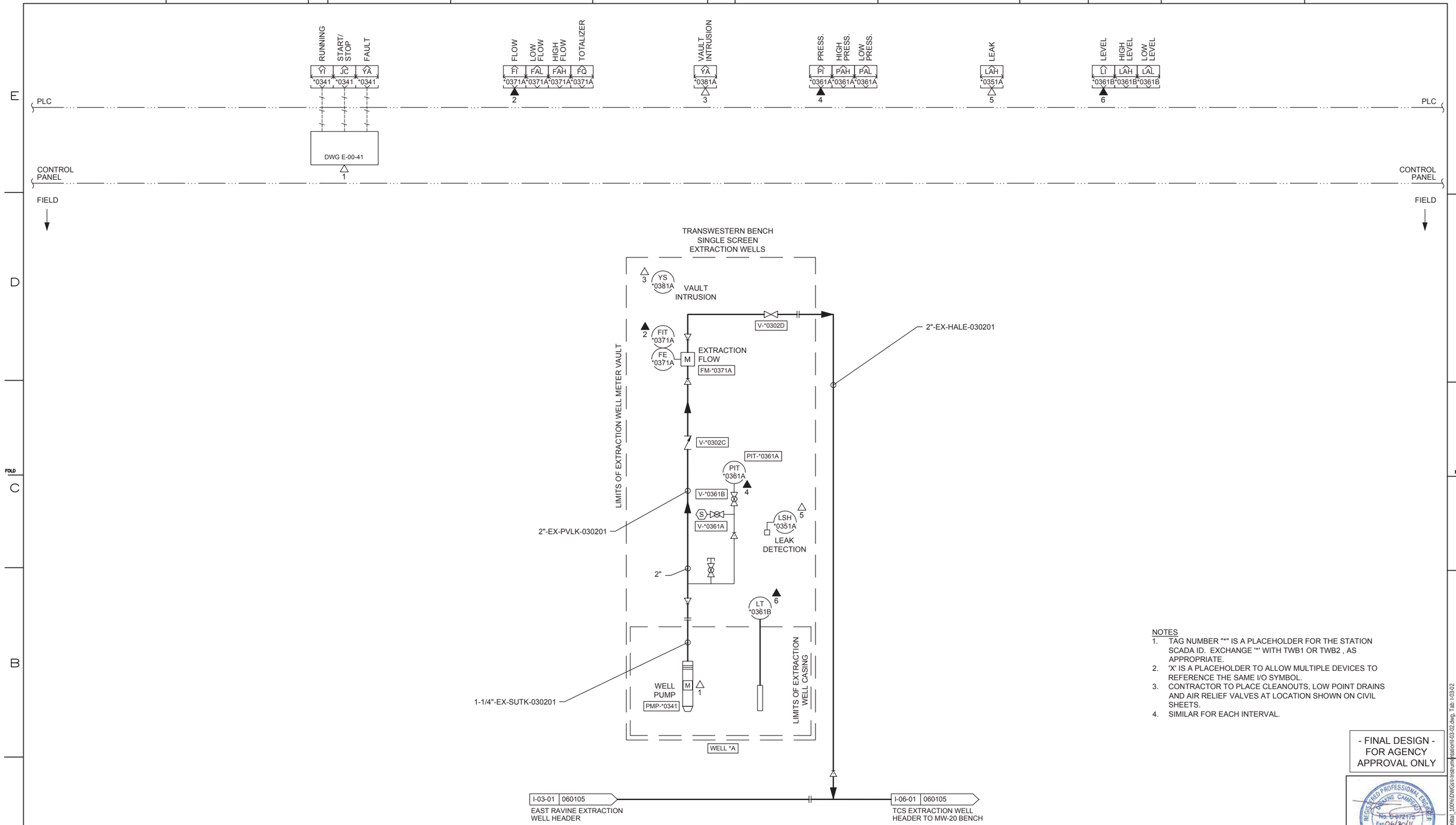

NOTES
1. TAG NUMBER "*" IS A PLACEHOLDER FOR THE STATION SCADA ID. EXCHANGE '*' WITH TWB1 OR TWB2 , AS APPROPRIATE.
2. 'X' IS A PLACEHOLDER TO ALLOW MULTIPLE DEVICES TO REFERENCE THE SAME I/O SYMBOL.
3. CONTRACTOR TO PLACE CLEANOUTS, LOW POINT DRAINS AND AIR RELIEF VALVES AT LOCATION SHOWN ON CIVIL SHEETS.
4. SIMILAR FOR EACH INTERVAL.

- FINAL DESIGN - FOR AGENCY APPROVAL ONLY

REGISTERED PROFESSIONAL ENGINEER DIANNE CAMPBELL No. C 072178 EXP 06/30/16 CIVIL STATE OF CALIFORNIA

ETIC ENGINEERING

ARCADIS

NO.	DATE	DESCRIPTION	GM/SPEC	DWN	CHKD	SUPV	APVD BY
2	11/18/15	FINAL DESIGN		AJW	JPB	DAC	RAO
1	09/08/14	PRE-FINAL (90%) DESIGN		MS	MWM	JPB	JEF
0	04/05/13	INTERMEDIATE (60%) DESIGN		MS	MWM	JPB	JEF

REVISIONS

APPROVED BY	
	RAO

SO	
SUPV	
DSGN	
DWN	
CHKD	
OK	
DATE	
SCALES	

TOPOCK GROUNDWATER REMEDIATION PROJECT

TCS LOOP TRANSWESTERN BENCH EXTRACTION WELLS P&ID

GAS TRANSMISSION & DISTRIBUTION

PACIFIC GAS AND ELECTRIC COMPANY
SAN FRANCISCO, CALIFORNIA

MICROFILM	
BILL OF MATL	
DWG LIST	
SUPSDS	
SUPSD BY	
SHEET NO.	of SHEETS
I-03-02	REV 2

N1808

11/09/2015, 17:14, G:\Graphics\ARITOPOCK-01\Submittal_100%\DWGS\I-Instrumentation\I-03-02.dwg, Tab: I-03-02

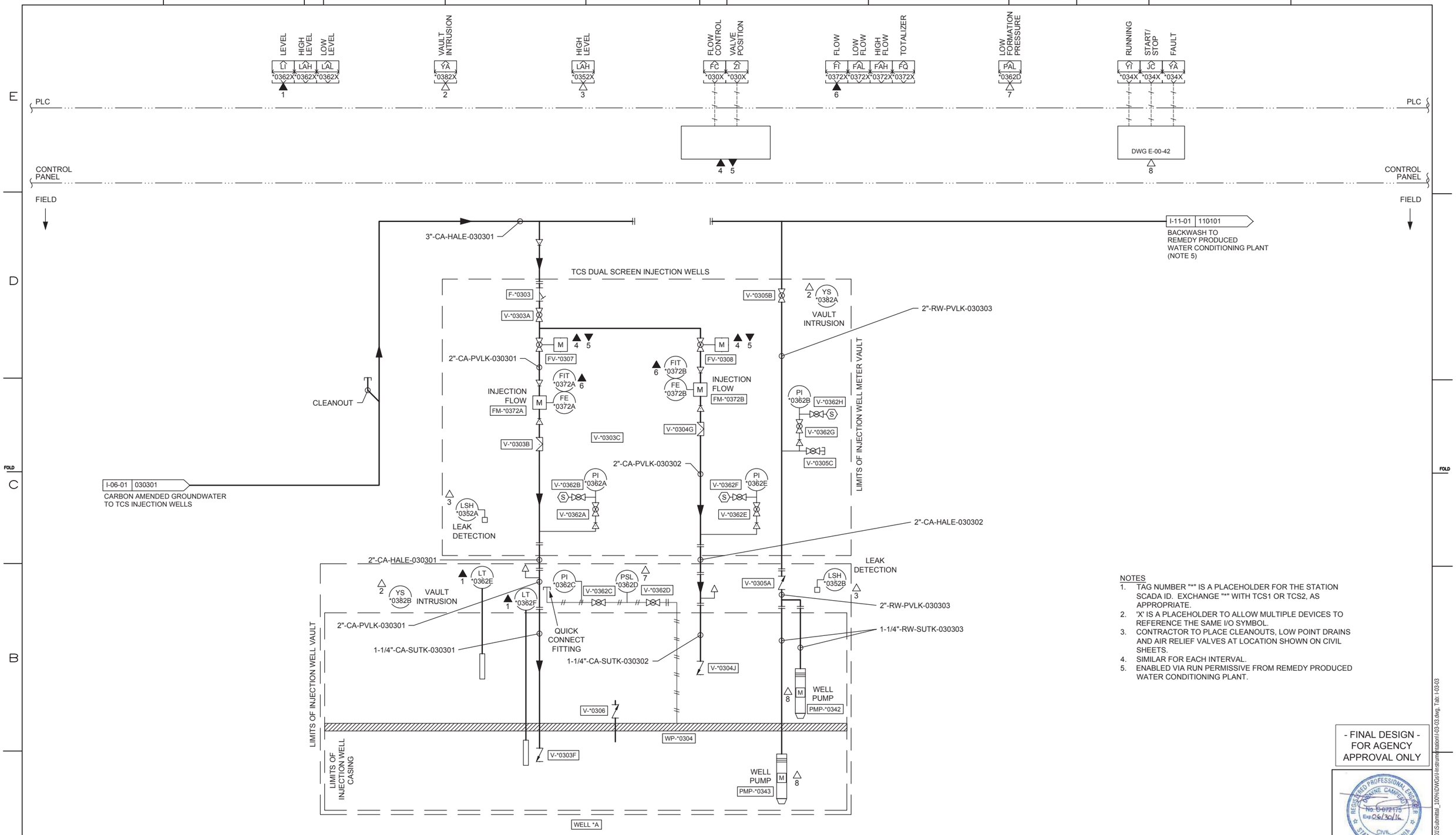

NOTES
1. TAG NUMBER "*" IS A PLACEHOLDER FOR THE STATION SCADA ID. EXCHANGE "*" WITH TCS1 OR TCS2, AS APPROPRIATE.
2. 'X' IS A PLACEHOLDER TO ALLOW MULTIPLE DEVICES TO REFERENCE THE SAME I/O SYMBOL.
3. CONTRACTOR TO PLACE CLEANOUTS, LOW POINT DRAINS AND AIR RELIEF VALVES AT LOCATION SHOWN ON CIVIL SHEETS.
4. SIMILAR FOR EACH INTERVAL.
5. ENABLED VIA RUN PERMISSIVE FROM REMEDY PRODUCED WATER CONDITIONING PLANT.

- FINAL DESIGN - FOR AGENCY APPROVAL ONLY

REGISTERED PROFESSIONAL ENGINEER DONNINE CAMPBELL No. C-072175 Exp. 06/30/16 CIVIL STATE OF CALIFORNIA

ETIC ENGINEERING

ARCADIS

NO.	DATE	DESCRIPTION	GM/SPEC	DWN	CHKD	SUPV	APVD	BY
2	11/18/15	FINAL DESIGN		AJW	JPB	DAC	RAO	
1	09/08/14	PRE-FINAL (90%) DESIGN		MS	MWM	JPB	JEF	
0	04/05/13	INTERMEDIATE (60%) DESIGN		MS	MWM	JPB	JEF	

REVISIONS

APPROVED BY: RAO

SO / SUPV / DSGN / DWN / CHKD / OK / DATE / SCALES

TOPOCK GROUNDWATER REMEDIATION PROJECT

TCS LOOP INJECTION WELLS P&ID

GAS TRANSMISSION & DISTRIBUTION
PACIFIC GAS AND ELECTRIC COMPANY
SAN FRANCISCO, CALIFORNIA

MICROFILM
BILL OF MATL
DWG LIST
SUPSDS
SUPSD BY
SHEET NO. I-03-03 of SHEETS
REV 2

11/03/2015, 17:14, G:\Graphics\ARI\TOPOCK-01\Submittal_100%\DWGs\I-Instrumentation\I-03-03.dwg, Tab: I-03-03

N1808

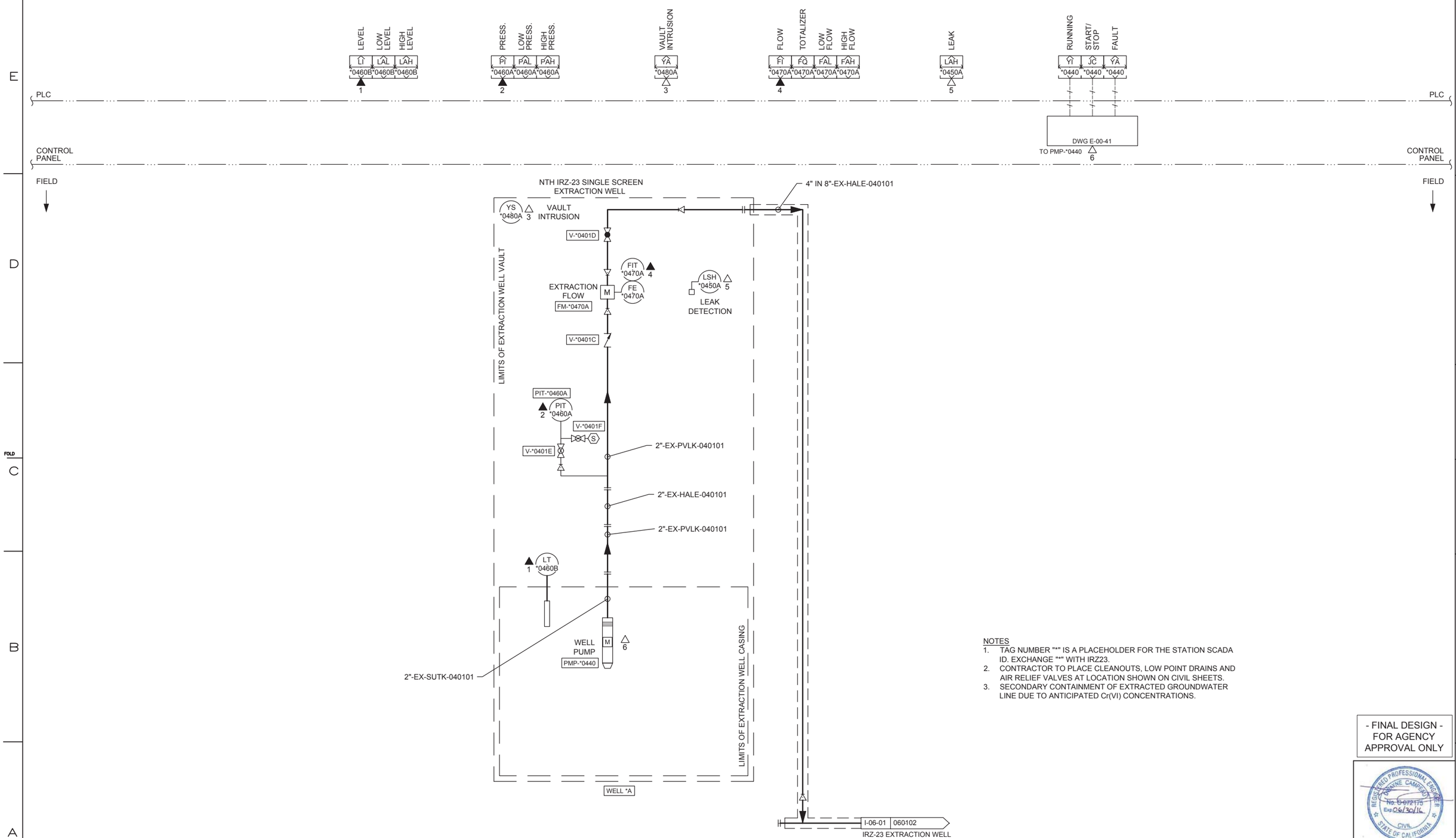

NOTES
1. TAG NUMBER "*" IS A PLACEHOLDER FOR THE STATION SCADA ID. EXCHANGE "*" WITH IRZ23.
2. CONTRACTOR TO PLACE CLEANOUTS, LOW POINT DRAINS AND AIR RELIEF VALVES AT LOCATION SHOWN ON CIVIL SHEETS.
3. SECONDARY CONTAINMENT OF EXTRACTED GROUNDWATER LINE DUE TO ANTICIPATED Cr(VI) CONCENTRATIONS.

- FINAL DESIGN - FOR AGENCY APPROVAL ONLY

REGISTERED PROFESSIONAL ENGINEER DWAYNE CAMPBELL No. C-072175 Exp. 06/30/16 CIVIL STATE OF CALIFORNIA

ETIC ENGINEERING

ARCADIS

NO.	DATE	DESCRIPTION	GM/SPEC	DWN	CHKD	SUPV	APVD BY
2	11/18/15	FINAL DESIGN		AJW	JPB	DAC	RAO
1	09/08/14	PRE-FINAL (90%) DESIGN		MS	MWM	JPB	JEF
0	04/05/13	INTERMEDIATE (60%) DESIGN		MS	MWM	JPB	JEF

REVISIONS

APPROVED BY: RAO

SO / SUPV / DSGN / DWN / CHKD / OK / DATE / SCALES

TOPOCK GROUNDWATER REMEDIATION PROJECT

IRZ SINGLE SCREEN EXTRACTION WELLS P&ID

GAS TRANSMISSION & DISTRIBUTION
PACIFIC GAS AND ELECTRIC COMPANY
SAN FRANCISCO, CALIFORNIA

MICROFILM / BILL OF MATL / DWG LIST / SUPSDS / SUPSD BY / SHEET NO. of SHEETS

I-04-01 REV 2

11/03/2015, 17:14, G:\Graphics\AR\TOPOCK-01\Submittal_100%\DWGs\I-Instrumentation\I-04-01.dwg, Tab: I-04-01

N1808

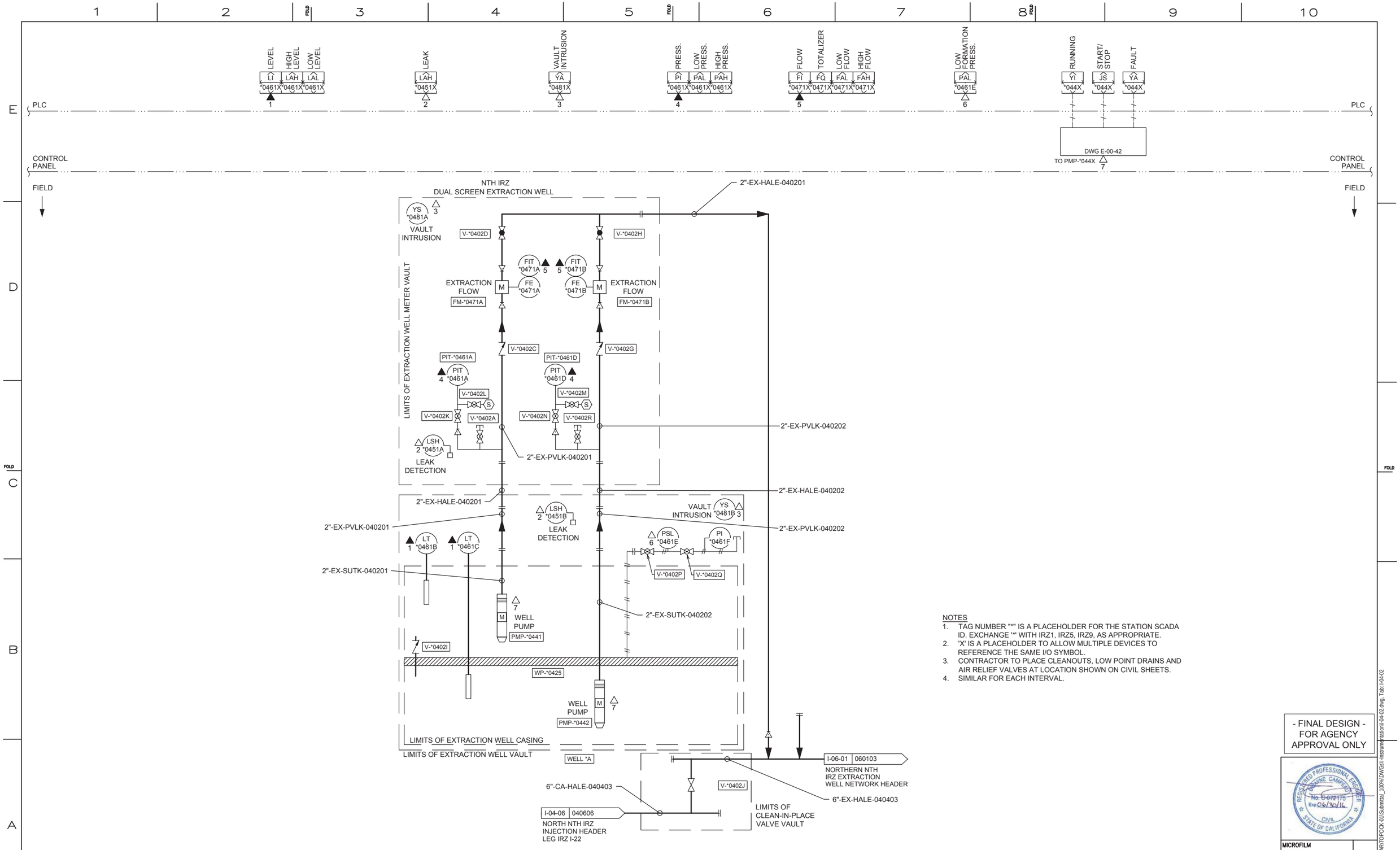

NOTES
1. TAG NUMBER "*" IS A PLACEHOLDER FOR THE STATION SCADA ID. EXCHANGE '*' WITH IRZ1, IRZ5, IRZ9, AS APPROPRIATE.
2. 'X' IS A PLACEHOLDER TO ALLOW MULTIPLE DEVICES TO REFERENCE THE SAME I/O SYMBOL.
3. CONTRACTOR TO PLACE CLEANOUTS, LOW POINT DRAINS AND AIR RELIEF VALVES AT LOCATION SHOWN ON CIVIL SHEETS.
4. SIMILAR FOR EACH INTERVAL.

- FINAL DESIGN - FOR AGENCY APPROVAL ONLY

REGISTERED PROFESSIONAL ENGINEER DWAYNE CAMPBELL No. C-072175 Exp. 06/30/16 CIVIL STATE OF CALIFORNIA

ETIC ENGINEERING

ARCADIS

NO.	DATE	DESCRIPTION	GM/SPEC	DWN	CHKD	SUPV	APVD BY
2	11/18/15	FINAL DESIGN		AJW	JPB	DAC	RAO
1	09/08/14	PRE-FINAL (90%) DESIGN		MS	MWM	JPB	JEF
0	04/05/13	INTERMEDIATE (60%) DESIGN		MS	MWM	JPB	JEF

REVISIONS

APPROVED BY: RAO

SO / SUPV / DSGN / DWN / CHKD / OK / DATE / SCALES

TOPOCK GROUNDWATER REMEDIATION PROJECT

IRZ DUAL SCREEN EXTRACTION WELLS P&ID

GAS TRANSMISSION & DISTRIBUTION
PACIFIC GAS AND ELECTRIC COMPANY
SAN FRANCISCO, CALIFORNIA

MICROFILM
BILL OF MATL
DWG LIST
SUPSDS
SUPSD BY
SHEET NO. of SHEETS
I-04-02
REV 2

11/03/2015, 17:15, G:\Graphics\AR\TOPOCK-01\Submittal_100%\DWGs\I-Instrumentation\I-04-02.dwg, Tab: I-04-02

N1808

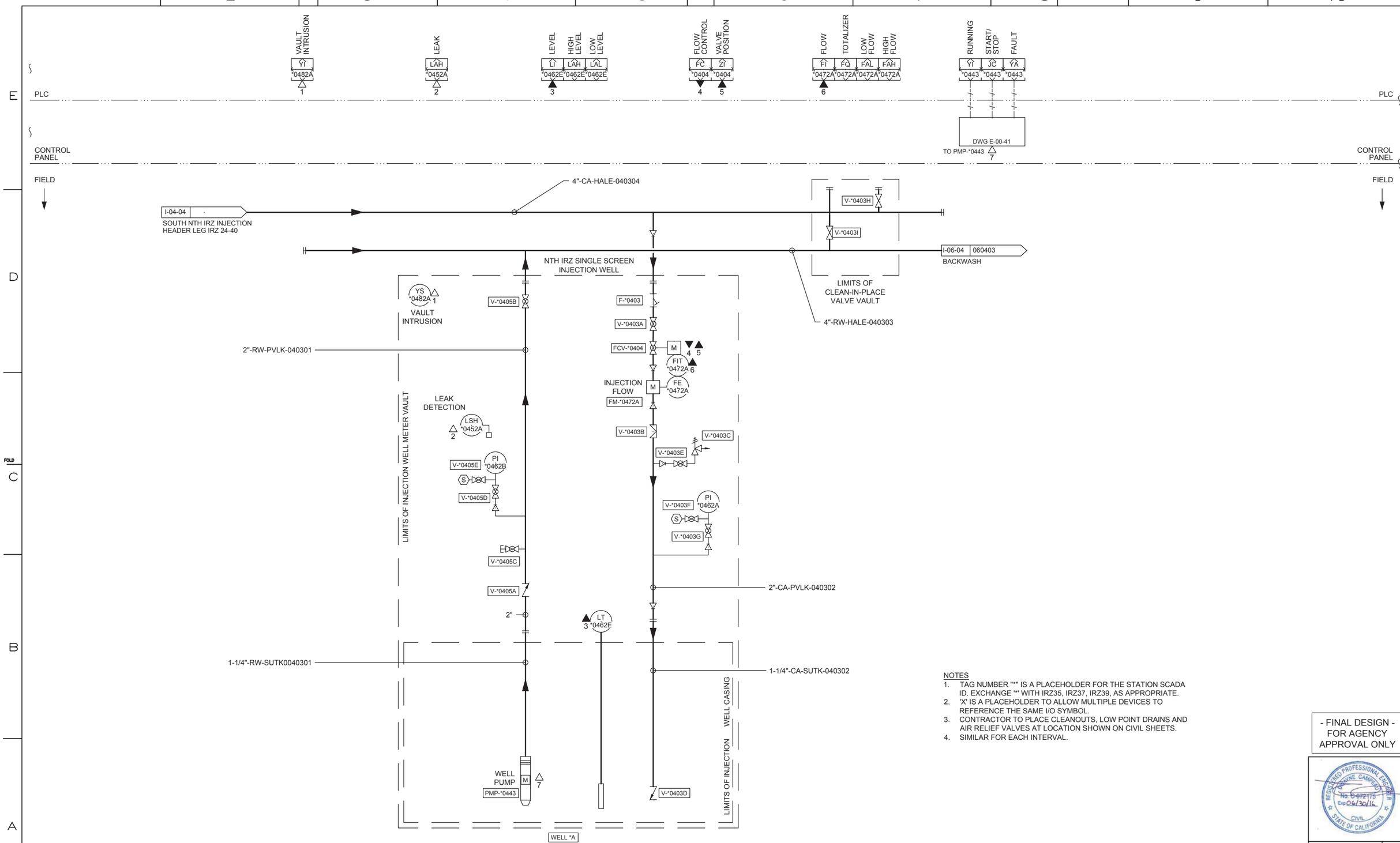

NOTES
1. TAG NUMBER "*" IS A PLACEHOLDER FOR THE STATION SCADA ID. EXCHANGE '*' WITH IRZ35, IRZ37, IRZ39, AS APPROPRIATE.
2. 'X' IS A PLACEHOLDER TO ALLOW MULTIPLE DEVICES TO REFERENCE THE SAME I/O SYMBOL.
3. CONTRACTOR TO PLACE CLEANOUTS, LOW POINT DRAINS AND AIR RELIEF VALVES AT LOCATION SHOWN ON CIVIL SHEETS.
4. SIMILAR FOR EACH INTERVAL.

- FINAL DESIGN - FOR AGENCY APPROVAL ONLY

REGISTERED PROFESSIONAL ENGINEER — JOHNNIE CAMPBELL — No. C-072176 — Exp 06/30/16 — CIVIL — STATE OF CALIFORNIA

ETIC ENGINEERING

ARCADIS

NO.	DATE	DESCRIPTION	GM/SPEC	DWN	CHKD	SUPV	APVD BY
2	11/18/15	FINAL DESIGN		AJW	JPB	DAC	RAO
1	09/08/14	PRE-FINAL (90%) DESIGN		MS	MWM	JPB	JEF
0	04/05/13	INTERMEDIATE (60%) DESIGN		MS	MWM	JPB	JEF

REVISIONS

APPROVED BY	SO
RAO	SUPV
	DSGN
	DWN
	CHKD
	OK
	DATE
	SCALES

TOPOCK GROUNDWATER REMEDIATION PROJECT

IRZ SINGLE SCREEN INJECTION WELLS P&ID

GAS TRANSMISSION & DISTRIBUTION
PACIFIC GAS AND ELECTRIC COMPANY
SAN FRANCISCO, CALIFORNIA

MICROFILM	
BILL OF MATL	
DWG LIST	
SUPSDS	
SUPSD BY	
SHEET NO.	of SHEETS
I-04-03	REV 2

N1808

11/03/2015, 17:15, G:\Graphics\ARI\TOPOCK-01\Submittal_100%\DWGs\I-Instrumentation\I-04-03.dwg, Tab: I-04-03

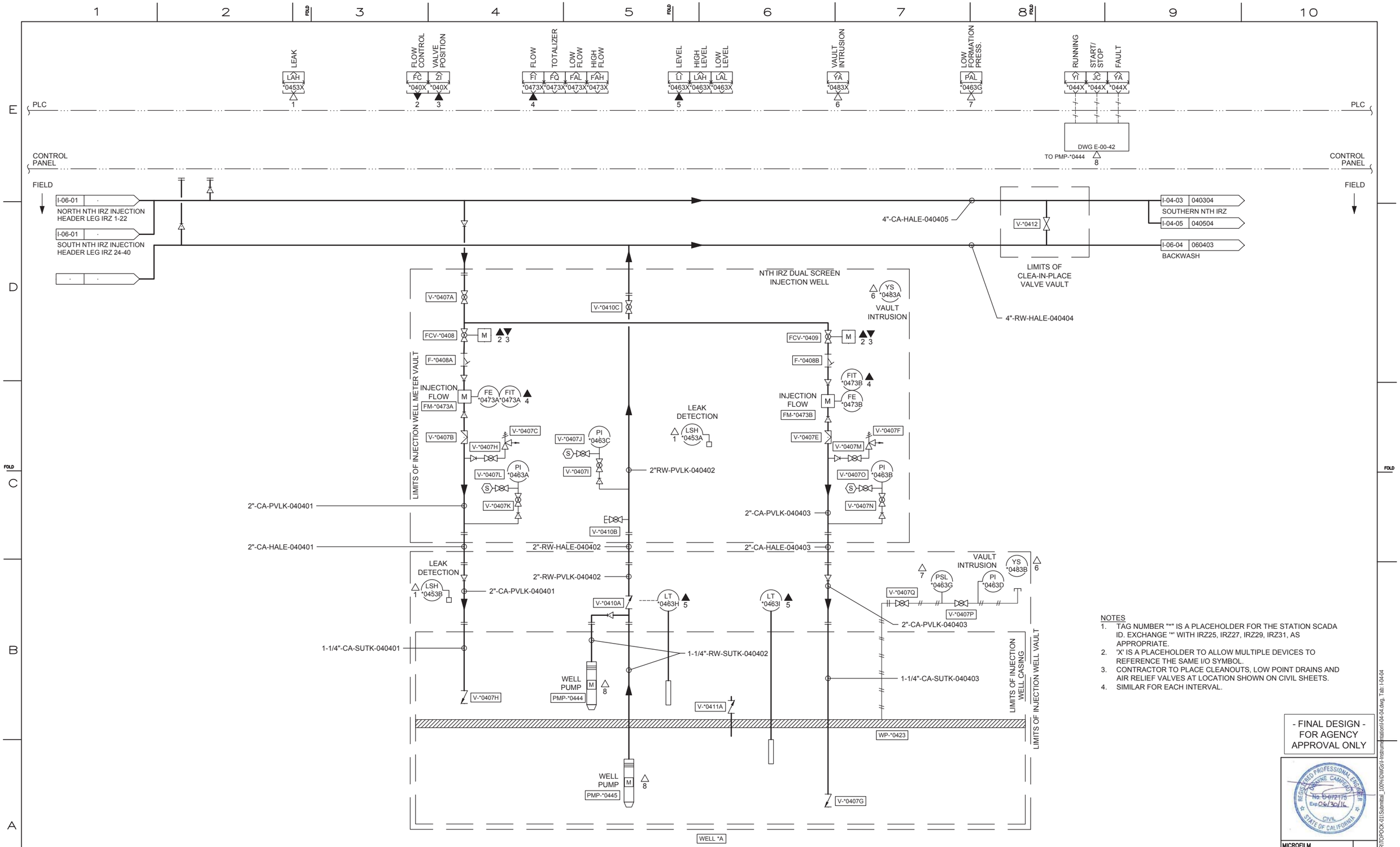

NOTES
1. TAG NUMBER "*" IS A PLACEHOLDER FOR THE STATION SCADA ID. EXCHANGE '*' WITH IRZ25, IRZ27, IRZ29, IRZ31, AS APPROPRIATE.
2. 'X' IS A PLACEHOLDER TO ALLOW MULTIPLE DEVICES TO REFERENCE THE SAME I/O SYMBOL.
3. CONTRACTOR TO PLACE CLEANOUTS, LOW POINT DRAINS AND AIR RELIEF VALVES AT LOCATION SHOWN ON CIVIL SHEETS.
4. SIMILAR FOR EACH INTERVAL.

- FINAL DESIGN - FOR AGENCY APPROVAL ONLY

REGISTERED PROFESSIONAL ENGINEER — DIANNE CAMPBELL — No. C 072175 — Exp 06/30/16 — CIVIL — STATE OF CALIFORNIA

ETIC ENGINEERING

ARCADIS

NO.	DATE	DESCRIPTION	GM/SPEC	DWN	CHKD	SUPV	APVD BY
2	11/18/15	FINAL DESIGN		AJW	JPB	DAC	RAO
1	09/08/14	PRE-FINAL (90%) DESIGN		MS	MWM	JPB	JEF
0	04/05/13	INTERMEDIATE (60%) DESIGN		MS	MWM	JPB	JEF

REVISIONS

APPROVED BY	
RAO	SO
	SUPV
	DSGN
	DWN
	CHKD
	OK
	DATE
	SCALES

TOPOCK GROUNDWATER REMEDIATION PROJECT

IRZ DUAL SCREEN EXTRACTION WELLS P&ID

GAS TRANSMISSION & DISTRIBUTION
PACIFIC GAS AND ELECTRIC COMPANY
SAN FRANCISCO, CALIFORNIA

MICROFILM	
BILL OF MATL	
DWG LIST	
SUPSDS	
SUPSD BY	
SHEET NO.	of SHEETS
I-04-04	REV 2

N1808

11/03/2015, 17:15, G:\Graphics\ARI\TOPOCK-031\Submittal_100%\DWGs\I-Instrumentation\I-04-04.dwg, Tab: I-04-04

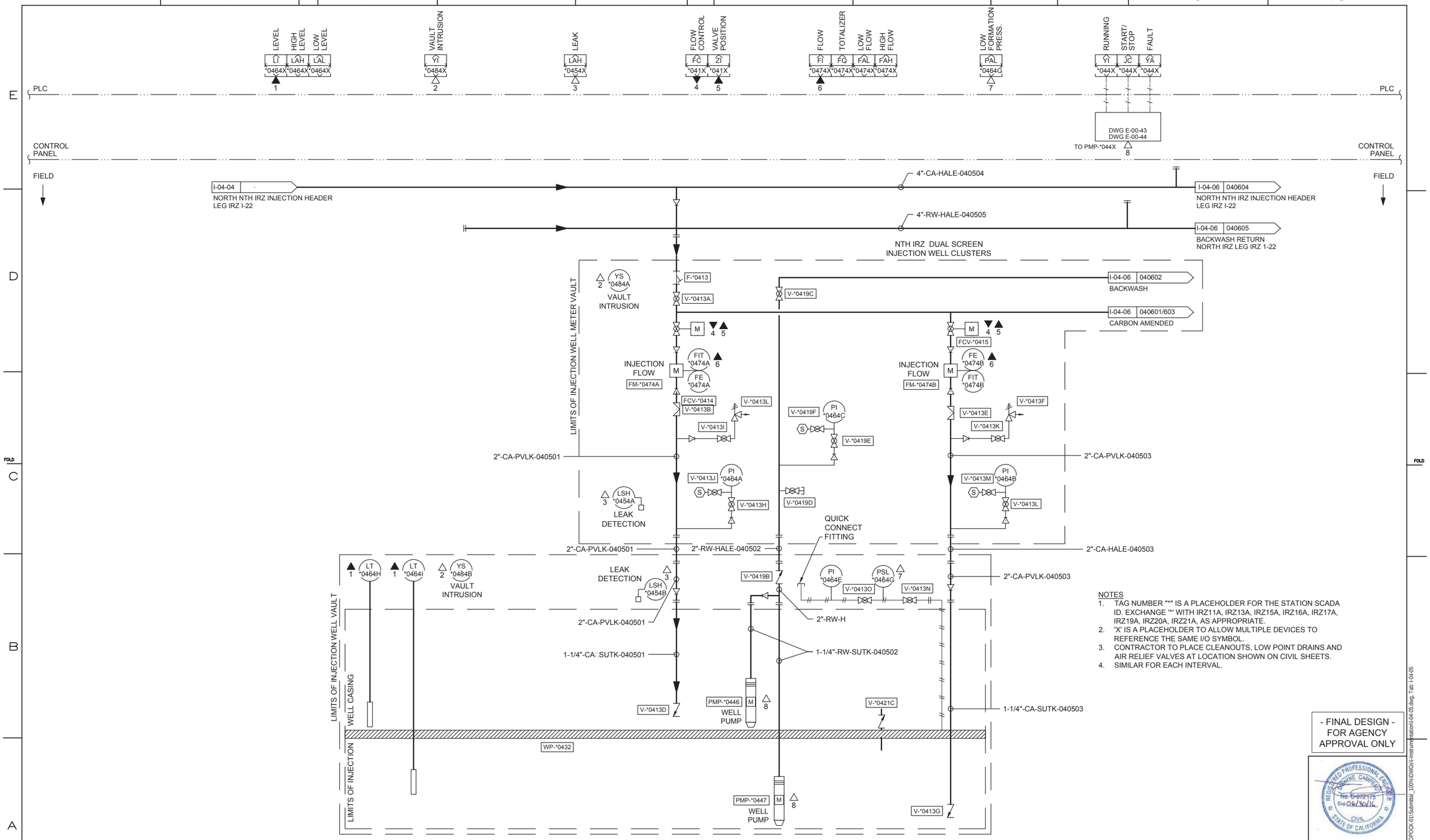

NOTES
1. TAG NUMBER "*" IS A PLACEHOLDER FOR THE STATION SCADA ID. EXCHANGE "*" WITH IRZ11A, IRZ13A, IRZ15A, IRZ16A, IRZ17A, IRZ19A, IRZ20A, IRZ21A, AS APPROPRIATE.
2. 'X' IS A PLACEHOLDER TO ALLOW MULTIPLE DEVICES TO REFERENCE THE SAME I/O SYMBOL.
3. CONTRACTOR TO PLACE CLEANOUTS, LOW POINT DRAINS AND AIR RELIEF VALVES AT LOCATION SHOWN ON CIVIL SHEETS.
4. SIMILAR FOR EACH INTERVAL.

- FINAL DESIGN - FOR AGENCY APPROVAL ONLY

REGISTERED PROFESSIONAL ENGINEER DWAYNE CAMPBELL No. C-072175 Exp. 06/30/16 CIVIL STATE OF CALIFORNIA

ETIC ENGINEERING

ARCADIS

NO.	DATE	DESCRIPTION	GM/SPEC	DWN	CHKD	SUPV	APVD BY
2	11/18/15	FINAL DESIGN		AJW	JPB	DAC	RAO
1	09/08/14	PRE-FINAL (90%) DESIGN		MS	MWM	JPB	JEF
0	04/05/13	INTERMEDIATE (60%) DESIGN		MS	MWM	JPB	JEF

REVISIONS

APPROVED BY: RAO

SO / SUPV / DSGN / DWN / CHKD / OK / DATE / SCALES

TOPOCK GROUNDWATER REMEDIATION PROJECT
IRZ DUAL SCREEN CLUSTER INJECTION WELLS P&ID
SHEET 1 OF 2
GAS TRANSMISSION & DISTRIBUTION
PACIFIC GAS AND ELECTRIC COMPANY
SAN FRANCISCO, CALIFORNIA

MICROFILM / BILL OF MATL / DWG LIST / SUPSDS / SUPSD BY / SHEET NO. of SHEETS

I-04-05 REV 2

11/03/2015, 17:15, G:\Graphics\AR\TOPOCK-01\Submittal_100%\DWGs\I-Instrumentation\I-04-05.dwg, Tab: I-04-05

N1808

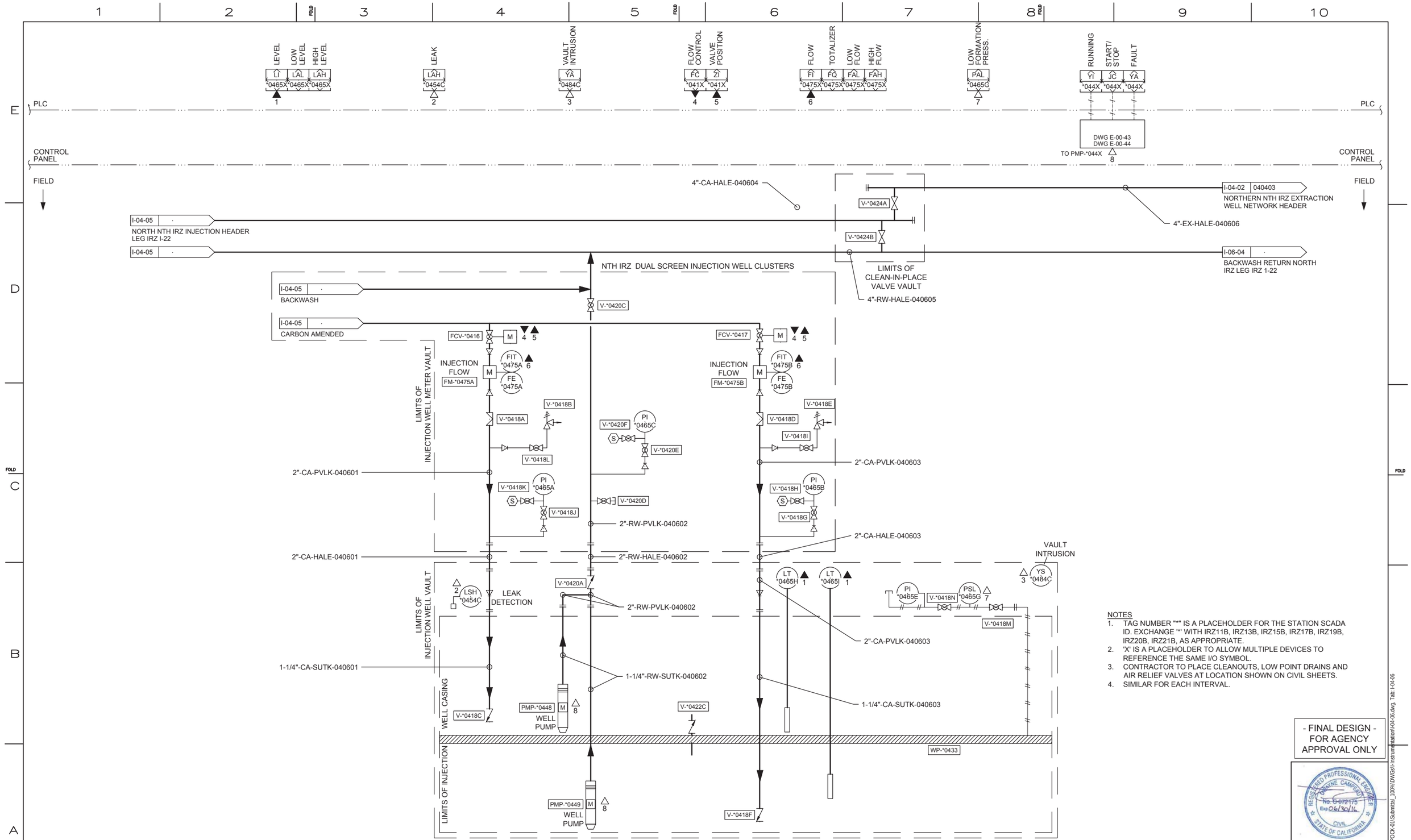

NOTES
1. TAG NUMBER "*" IS A PLACEHOLDER FOR THE STATION SCADA ID. EXCHANGE '*' WITH IRZ11B, IRZ13B, IRZ15B, IRZ17B, IRZ19B, IRZ20B, IRZ21B, AS APPROPRIATE.
2. 'X' IS A PLACEHOLDER TO ALLOW MULTIPLE DEVICES TO REFERENCE THE SAME I/O SYMBOL.
3. CONTRACTOR TO PLACE CLEANOUTS, LOW POINT DRAINS AND AIR RELIEF VALVES AT LOCATION SHOWN ON CIVIL SHEETS.
4. SIMILAR FOR EACH INTERVAL.

- FINAL DESIGN - FOR AGENCY APPROVAL ONLY

REGISTERED PROFESSIONAL ENGINEER DWAYNE CAMPBELL No. C-072175 Exp. 06/30/16 CIVIL STATE OF CALIFORNIA

ETIC ENGINEERING

ARCADIS

NO.	DATE	DESCRIPTION	GM/SPEC	DWN	CHKD	SUPV	APVD BY
2	11/18/15	FINAL DESIGN		AJW	JPB	DAC	RAO
1	09/08/14	PRE-FINAL (90%) DESIGN		MS	MWM	JPB	JEF
0	04/05/13	INTERMEDIATE (60%) DESIGN		MS	MWM	JPB	JEF

REVISIONS

APPROVED BY: RAO

SO / SUPV / DSGN / DWN / CHKD / OK / DATE / SCALES

TOPOCK GROUNDWATER REMEDIATION PROJECT
IRZ DUAL SCREEN CLUSTER INJECTION WELLS P&ID
SHEET 2 OF 2
GAS TRANSMISSION & DISTRIBUTION
PACIFIC GAS AND ELECTRIC COMPANY
SAN FRANCISCO, CALIFORNIA

MICROFILM
BILL OF MATL
DWG LIST
SUPSDS
SUPSD BY
SHEET NO. of SHEETS
I-04-06
REV 2

11/03/2015, 17:16, G:\Graphics\AR\TOPOCK-01\Submittal_100%\DWGs\I-Instrumentation\I-04-06.dwg, Tab: I-04-06

N1808

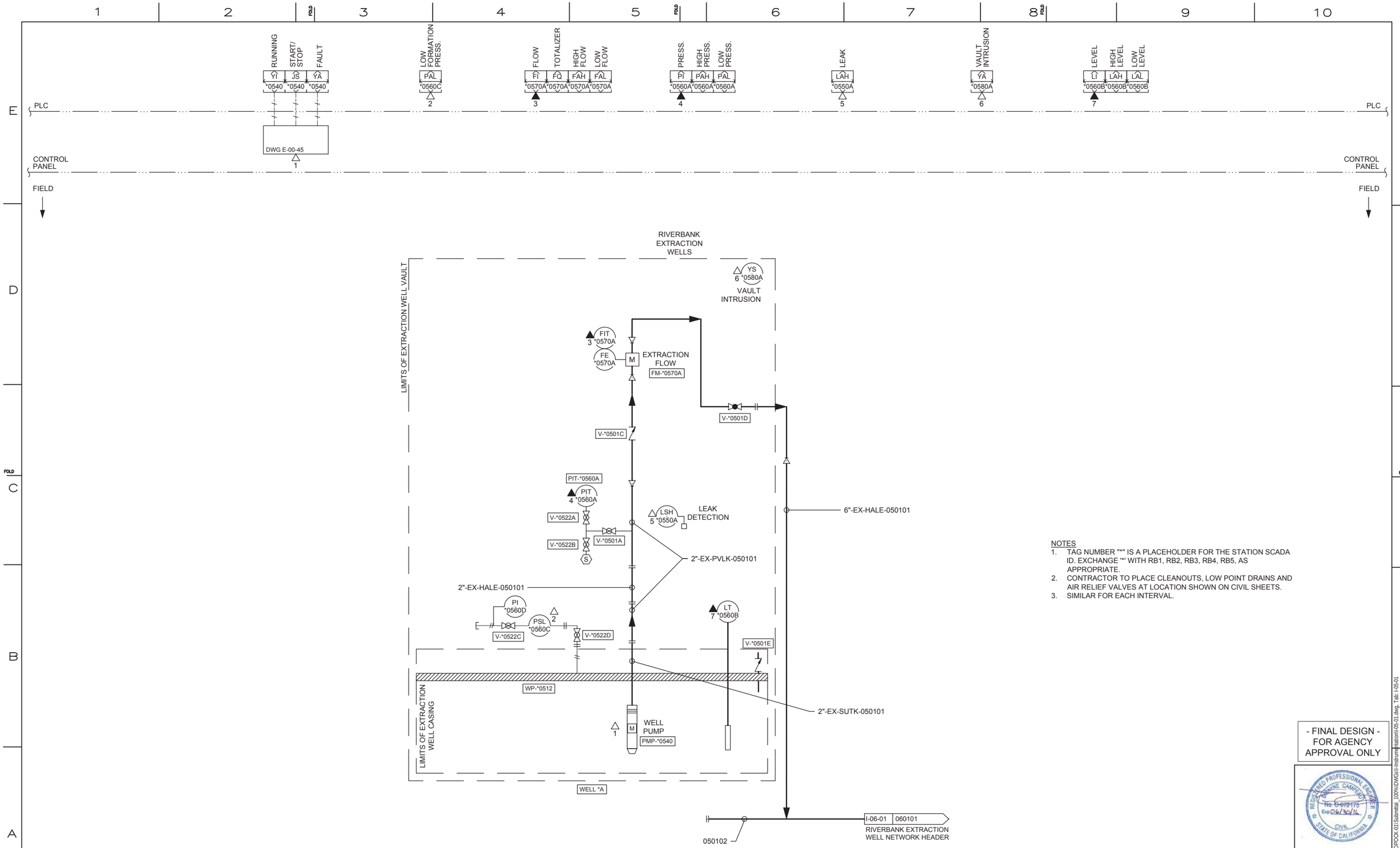

NOTES
1. TAG NUMBER "*" IS A PLACEHOLDER FOR THE STATION SCADA ID. EXCHANGE "*" WITH RB1, RB2, RB3, RB4, RB5, AS APPROPRIATE.
2. CONTRACTOR TO PLACE CLEANOUTS, LOW POINT DRAINS AND AIR RELIEF VALVES AT LOCATION SHOWN ON CIVIL SHEETS.
3. SIMILAR FOR EACH INTERVAL.

- FINAL DESIGN - FOR AGENCY APPROVAL ONLY

REGISTERED PROFESSIONAL ENGINEER
DOWNE CAMPBELL
No. C-072176
Exp 06/30/16
CIVIL
STATE OF CALIFORNIA

ETIC ENGINEERING

ARCADIS

NO.	DATE	DESCRIPTION	GM/SPEC	DWN	CHKD	SUPV	APVD BY
2	11/18/15	FINAL DESIGN		AJW	JPB	DAC	RAO
1	09/08/14	PRE-FINAL (90%) DESIGN		MS	MWM	JPB	JEF
0	04/05/13	INTERMEDIATE (60%) DESIGN		MS	MWM	JPB	JEF

REVISIONS

APPROVED BY	SO
	SUPV
RAO	DSGN
	DWN
	CHKD
	OK
	DATE
	SCALES

TOPOCK GROUNDWATER REMEDIATION PROJECT

INNER RECIRCULATION LOOP EXTRACTION WELLS P&ID

GAS TRANSMISSION & DISTRIBUTION
PACIFIC GAS AND ELECTRIC COMPANY
SAN FRANCISCO, CALIFORNIA

MICROFILM	
BILL OF MATL	
DWG LIST	
SUPSDS	
SUPSD BY	
SHEET NO.	of SHEETS
I-05-01	REV 2

N1808

11/03/2015, 17:20, G:\Graphics\ARIT\TOPOCK-031\Submittal_100%\DWGs\I-instrumentation\I-05-01.dwg, Tab: I-05-01

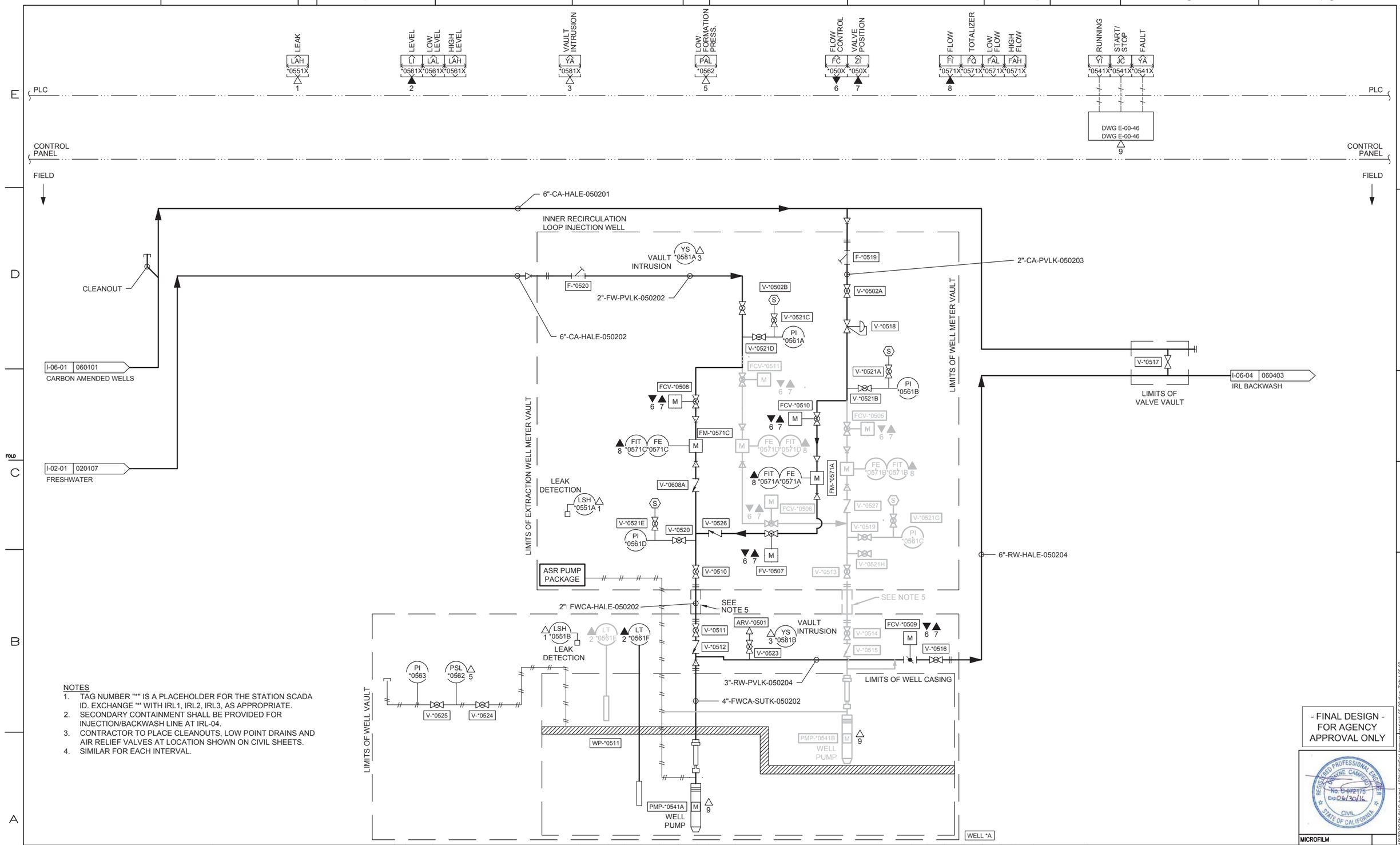

NOTES
1. TAG NUMBER "*" IS A PLACEHOLDER FOR THE STATION SCADA ID. EXCHANGE '*' WITH IRL1, IRL2, IRL3, AS APPROPRIATE.
2. SECONDARY CONTAINMENT SHALL BE PROVIDED FOR INJECTION/BACKWASH LINE AT IRL-04.
3. CONTRACTOR TO PLACE CLEANOUTS, LOW POINT DRAINS AND AIR RELIEF VALVES AT LOCATION SHOWN ON CIVIL SHEETS.
4. SIMILAR FOR EACH INTERVAL.

- FINAL DESIGN - FOR AGENCY APPROVAL ONLY

REGISTERED PROFESSIONAL ENGINEER DWAYNE CAMPBELL No. C-072175 Exp. 06/30/16 CIVIL STATE OF CALIFORNIA

ETIC ENGINEERING

ARCADIS

NO.	DATE	DESCRIPTION	GM/SPEC	DWN	CHKD	SUPV	APVD BY
2	11/18/15	FINAL DESIGN		AJW	JPB	DAC	RAO
1	09/08/14	PRE-FINAL (90%) DESIGN		MS	MWM	JPB	JEF
0	04/05/13	INTERMEDIATE (60%) DESIGN		MS	MWM	JPB	JEF

REVISIONS

APPROVED BY: RAO

SO / SUPV / DSGN / DWN / CHKD / OK / DATE / SCALES

TOPOCK GROUNDWATER REMEDIATION PROJECT

INNER RECIRCULATION LOOP TYPE 1 INJECTION WELLS P&ID

GAS TRANSMISSION & DISTRIBUTION
PACIFIC GAS AND ELECTRIC COMPANY
SAN FRANCISCO, CALIFORNIA

MICROFILM / BILL OF MATL / DWG LIST / SUPSDS / SUPSD BY / SHEET NO. of SHEETS

I-05-02 REV 2

11/03/2015, 17:20, G:\Graphics\AR\TOPOCK-01\Submittal_100%\DWGs\I-Instrumentation\I-05-02.dwg, Tab: I-05-02

N1808

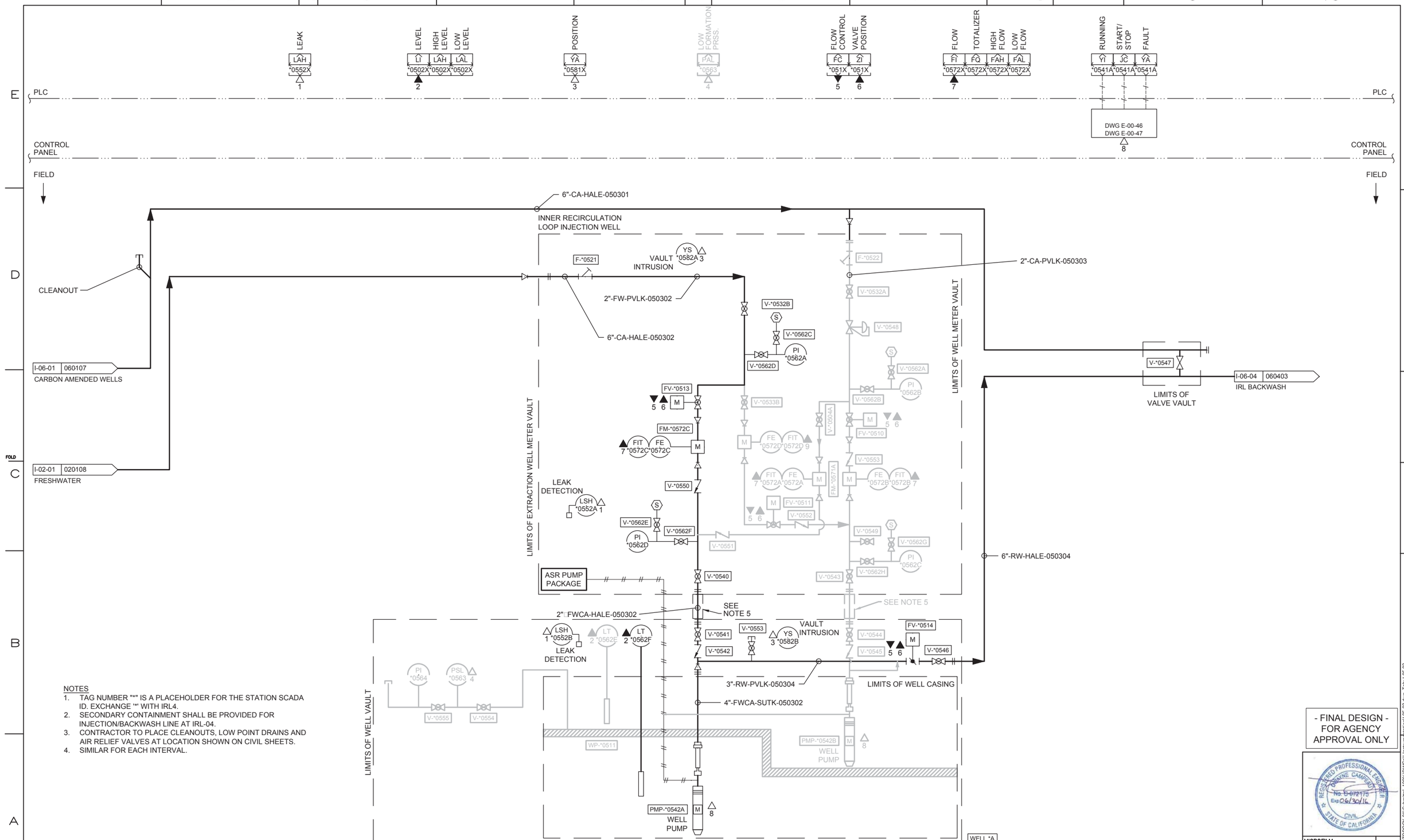

NOTES
1. TAG NUMBER "*" IS A PLACEHOLDER FOR THE STATION SCADA ID. EXCHANGE '*' WITH IRL4.
2. SECONDARY CONTAINMENT SHALL BE PROVIDED FOR INJECTION/BACKWASH LINE AT IRL-04.
3. CONTRACTOR TO PLACE CLEANOUTS, LOW POINT DRAINS AND AIR RELIEF VALVES AT LOCATION SHOWN ON CIVIL SHEETS.
4. SIMILAR FOR EACH INTERVAL.

- FINAL DESIGN - FOR AGENCY APPROVAL ONLY

REGISTERED PROFESSIONAL ENGINEER DWAYNE CAMPBELL No. C 61715 Exp 06/30/16 CIVIL STATE OF CALIFORNIA

ETIC ENGINEERING

ARCADIS

NO.	DATE	DESCRIPTION	GM/SPEC	DWN	CHKD	SUPV	APVD BY
2	11/18/15	FINAL DESIGN		AJW	JPB	DAC	RAO
1	09/08/14	PRE-FINAL (90%) DESIGN		MS	MWM	JPB	JEF
0	04/05/13	INTERMEDIATE (60%) DESIGN		MS	MWM	JPB	JEF

REVISIONS

APPROVED BY	
RAO	SO
	SUPV
	DSGN
	DWN
	CHKD
	OK
	DATE
	SCALES

TOPOCK GROUNDWATER REMEDIATION PROJECT

INNER RECIRCULATION LOOP TYPE 2 INJECTION WELLS P&ID

GAS TRANSMISSION & DISTRIBUTION
PACIFIC GAS AND ELECTRIC COMPANY
SAN FRANCISCO, CALIFORNIA

MICROFILM	
BILL OF MATL	
DWG LIST	
SUPSDS	
SUPSD BY	
SHEET NO.	of SHEETS
I-05-03	REV 2

N1808

11/03/2015, 17:20, G:\Graphics\AR\TOPOCK-031Submittal_100%\DWGs\I-Instrumentation\I-05-03.dwg, Tab: I-05-03

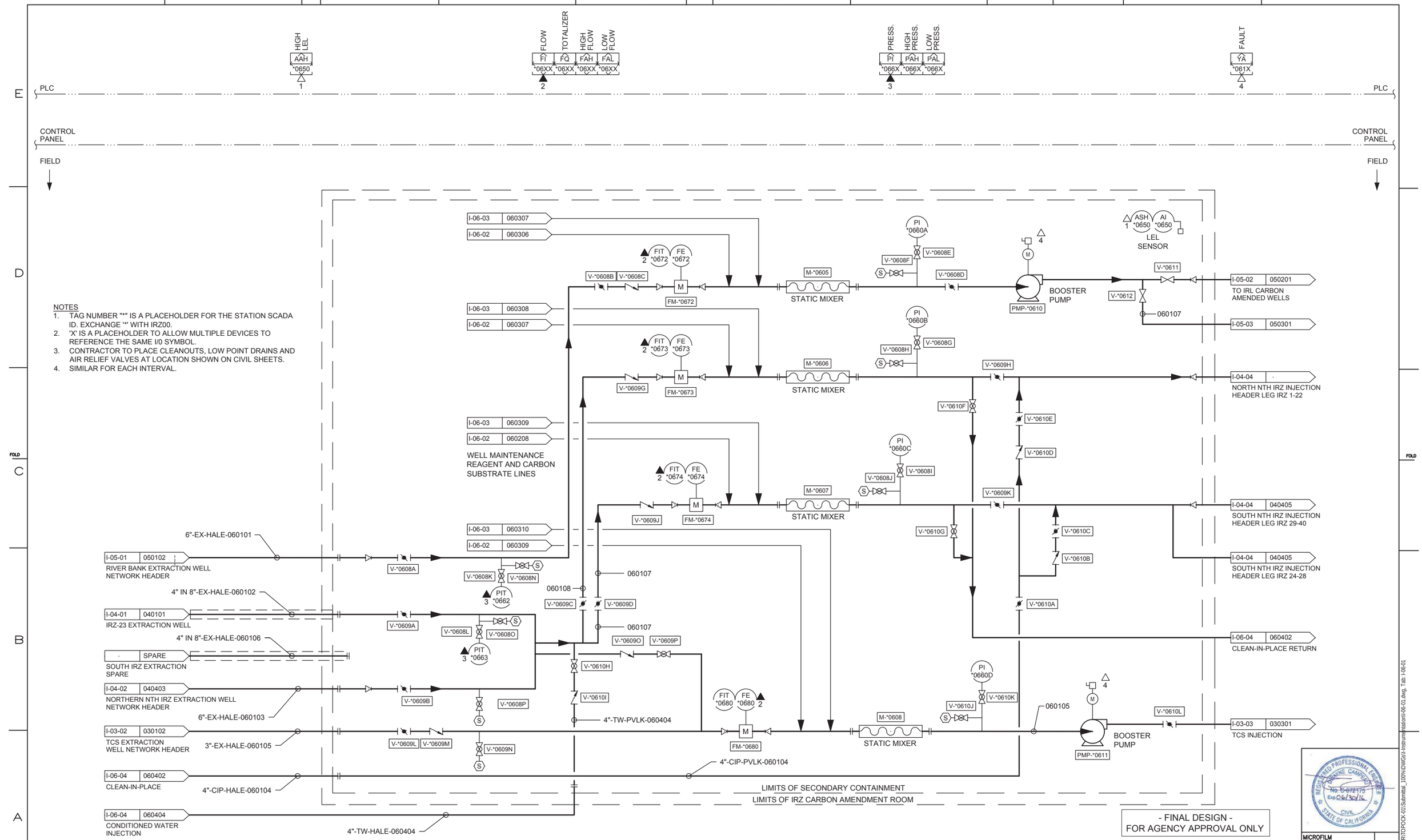

ETIC ENGINEERING

ARCADIS

NO.	DATE	DESCRIPTION	GM/SPEC	DWN	CHKD	SUPV	APVD	BY
2	11/18/15	FINAL DESIGN		AJW	JPB	DAC	RAO	
1	09/08/14	PRE-FINAL (90%) DESIGN		MS	MWM	JPB	JEF	
0	04/04/13	INTERMEDIATE (60%) DESIGN		MS	MWM	JPB	JEF	

REVISIONS

APPROVED BY	
	SO
RAO	SUPV
	DSGN
	DWN
	CHKD
	OK
	DATE
	SCALES

TOPOCK GROUNDWATER REMEDIATION PROJECT

MW-20 BENCH CARBON AMENDMENT BUILDING P&ID SHEET 1 OF 4

GAS TRANSMISSION & DISTRIBUTION

PACIFIC GAS AND ELECTRIC COMPANY

SAN FRANCISCO, CALIFORNIA

REGISTERED PROFESSIONAL ENGINEER — JOHNNYE CAMPBELL — No. C-072175 — Exp 06/30/16 — CIVIL — STATE OF CALIFORNIA

MICROFILM	
BILL OF MATL	
DWG LIST	
SUPSDS	
SUPSD BY	
SHEET NO.	of SHEETS
I-06-01	REV 2

N1808

11/03/2015, 17:21, G:\Graphics\ARR\TOPOCK 01\Submittal_100%\DWGs\I-Instrumentation\I-06-01.dwg, Tab: I-06-01

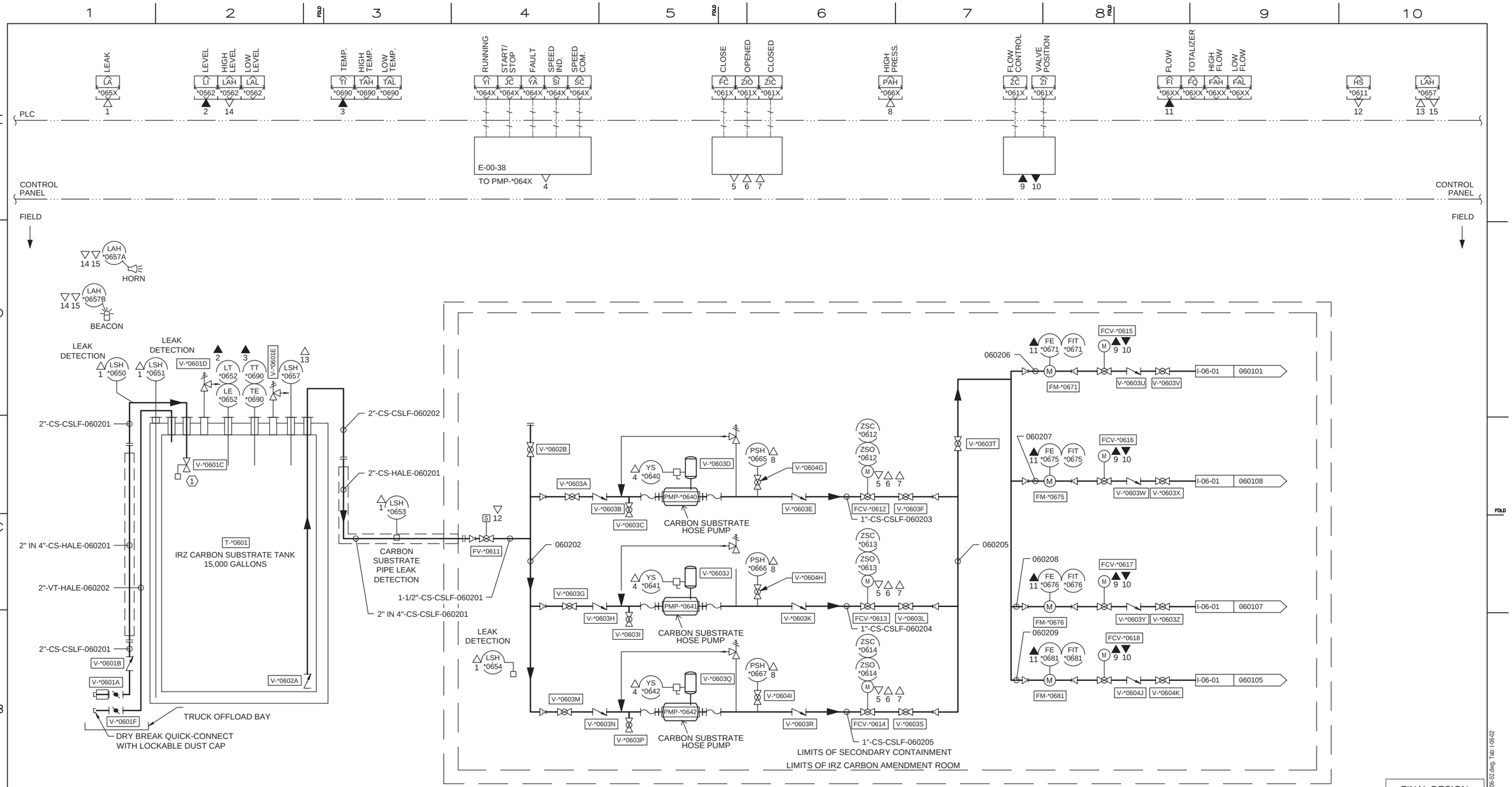

NOTES
1. TAG NUMBER "*" IS A PLACEHOLDER FOR THE STATION SCADA ID. EXCHANGE '*' WITH IRZ00.
2. 'X' IS A PLACEHOLDER TO ALLOW MULTIPLE DEVICES TO REFERENCE THE SAME I/O SYMBOL.
3. CONTRACTOR TO PLACE CLEANOUTS, LOW POINT DRAINS AND AIR RELIEF VALVES AT LOCATION SHOWN ON CIVIL SHEETS.
4. SIMILAR FOR EACH INTERVAL.

- FINAL DESIGN - FOR AGENCY APPROVAL ONLY

REGISTERED PROFESSIONAL ENGINEER DWAYNE CAMPBELL No. C-072175 Exp. 06/30/16 CIVIL STATE OF CALIFORNIA

ETIC ENGINEERING

ARCADIS

NO.	DATE	DESCRIPTION	GM/SPEC	DWN	CHKD	SUPV	APVD BY
2	11/18/15	FINAL DESIGN		AJW	JPB	DAC	RAO
1	09/08/14	PRE-FINAL (90%) DESIGN		MS	MWM	JPB	JEF
0	04/04/13	INTERMEDIATE (60%) DESIGN		MS	MWM	JPB	JEF

REVISIONS

APPROVED BY: RAO

SO / SUPV / DSGN / DWN / CHKD / OK / DATE / SCALES

TOPOCK GROUNDWATER REMEDIATION PROJECT
MW-20 BENCH CARBON AMENDMENT BUILDING P&ID
SHEET 2 OF 4
GAS TRANSMISSION & DISTRIBUTION
PACIFIC GAS AND ELECTRIC COMPANY
SAN FRANCISCO, CALIFORNIA

MICROFILM / BILL OF MATL / DWG LIST / SUPSDS / SUPSD BY / SHEET NO. of SHEETS

I-06-02 REV 2

11/03/2015, 17:22, G:\Graphics\AR\TOPOCK-01\Submittal_100%\DWGs\I-Instrumentation\I-06-02.dwg, Tab: I-06-02

N1808

1 2 FOLD 3 4 5 FOLD 6 7 8 FOLD 9 10

E

PLC

CONTROL PANEL

FIELD

LEAK LEH *06XX 1

START/STOP FC *06XX 2

FLOW FI *067X | TOTALIZER FQ *067X | HIGH FLOW FAH *067X | LOW FLOW FAL *067X 3

EYEWASH YA *0681 4

LEVEL LT *0659 | HIGH FLOW LAH *0659 | LOW LEVEL LAL *0659 5

RUNNING YI *0643 | START/STOP JC *0643 | FAULT YA *0643 | SPEED IND. SI *0643 | SPEED COM. SC *0643

E-00-38 6

HIGH PRESS. PAH *0668 7

FLOW CONTROL FC *0631 | VALVE POSITION ZI *0631 8 9

PRESS. PI *0661 | HIGH PRESS. PAH *0661 | LOW PRESS. PAL *0661 10

PLC

CONTROL PANEL

FIELD

D

2" IN 4"-WM-HALE-060301

DRY BREAK QUICK-CONNECT WITH DUST CAP

2"-WM-PVLK-060301

2"-VT-HALE-060304

VENT TO ATMOSPHERE

V-*0620M

V-*0620N

F-*0620

LT *0659 5

LE *0659

V-*0620E

LSH 1 *0649

LEAK DETECTION

WELL MAINT. REAGENT TANKER

REAGENT FILL PIPE LEAK DETECTION

LSH *0655 1

V-*0620A

V-*0620B

DRY BREAK QUICK CONNECT

SECONDARY CONTAINMENT

FV-*0629 S 2

FE *0677 | FIT *0677 3

M FM-*0677

V-*0620C

V-*0620D

1"-WM-PVLK-060302

E-*0622

T-*0619

IRZ WELL MAINTENANCE REAGENT DAY TANK 1,000 GAL.

V-*0629C

PIT-*0661

PIT *0661 10

FIT *0679 3

FE *0679

8 9 M FCV-*0631

V-*0670H

V-*0670G

S

V-*0620I

V-*0620K

V-*0620J

M FM-*0679

PSH *0668 7

2"-WM-PVLK-060305

YS 6 *0643

PMP-*0643

WELL MAINTENANCE REAGENT HOSE PUMP

F-*0622

2"

V-*0620H

V-*0620L

V-*0620G

V-*0620F

FE *0678 | FIT *0678 3

M FM-*0678

FV-*0630 S 2

V-*0625A

V-*0625B

V-*0625C

V-*0625D

V-*0625E

I-01-01 FRESHWATER

3"-FM--HALE-060303

1"-FW-PVLK-060303

POTABLE WATER

FS *0681 4

EYEWASH STATION

1"-PW-PVLK-060306

NOTE:
DO NOT ENERGIZE FLOW METER UNTIL FLOW HAS BEEN ESTABLISHED

LIMITS OF SECONDARY CONTAINMENT

LIMITS OF IRZ WELL MAINTENANCE ROOM

2"-WM-PVLK-060305

060307

060308 V-*0604A V-*0604B I-06-01 060101

060309 V-*0604C V-*0604D I-06-01 060108

060310 V-*0604E V-*0604F I-06-01 060107

V-*0604L V-*0604M I-06-01 060105

LIMITS OF IRZ CARBON AMENDMENT ROOM

LIMITS OF SECONDARY CONTAINMENT

C

B

A

NOTES
1. TAG NUMBER "*" IS A PLACEHOLDER FOR THE STATION SCADA ID. EXCHANGE '*' WITH IRZ00.
2. 'X' IS A PLACEHOLDER TO ALLOW MULTIPLE DEVICES TO REFERENCE THE SAME I/O SYMBOL.
3. CONTRACTOR TO PLACE CLEANOUTS, LOW POINT DRAINS AND AIR RELIEF VALVES AT LOCATION SHOWN ON CIVIL SHEETS.
4. SIMILAR FOR EACH INTERVAL.

REGISTERED PROFESSIONAL ENGINEER DWAYNE CAMPBELL No. C 072175 Exp 06/30/16 CIVIL STATE OF CALIFORNIA

- FINAL DESIGN - FOR AGENCY APPROVAL ONLY

ETIC ENGINEERING

ARCADIS

NO.	DATE	DESCRIPTION	GM/SPEC	DWN	CHKD	SUPV	APVD BY
2	11/18/15	FINAL DESIGN		AJW	JPB	DAC	RAO
1	09/08/14	PRE-FINAL (90%) DESIGN		MS	MWM	JPB	JEF
0	04/04/13	INTERMEDIATE (60%) DESIGN		MS	MWM	JPB	JEF

REVISIONS

APPROVED BY	
RAO	SO
	SUPV
	DSGN
	DWN
	CHKD
	OK
	DATE
	SCALES

TOPOCK GROUNDWATER REMEDIATION PROJECT

MW-20 BENCH CARBON AMENDMENT BUILDING P&ID SHEET 3 OF 4

GAS TRANSMISSION & DISTRIBUTION

PACIFIC GAS AND ELECTRIC COMPANY
SAN FRANCISCO, CALIFORNIA

MICROFILM	
BILL OF MATL	
DWG LIST	
SUPSDS	
SUPSD BY	
SHEET NO.	of SHEETS
I-06-03	REV 2

N1808

11/03/2015, 17:22, G:\Graphics\ART\TOPOCK-01\Submittal_100%\DWGs\Instrumentation\I-06-03.dwg, Tab: I-06-03

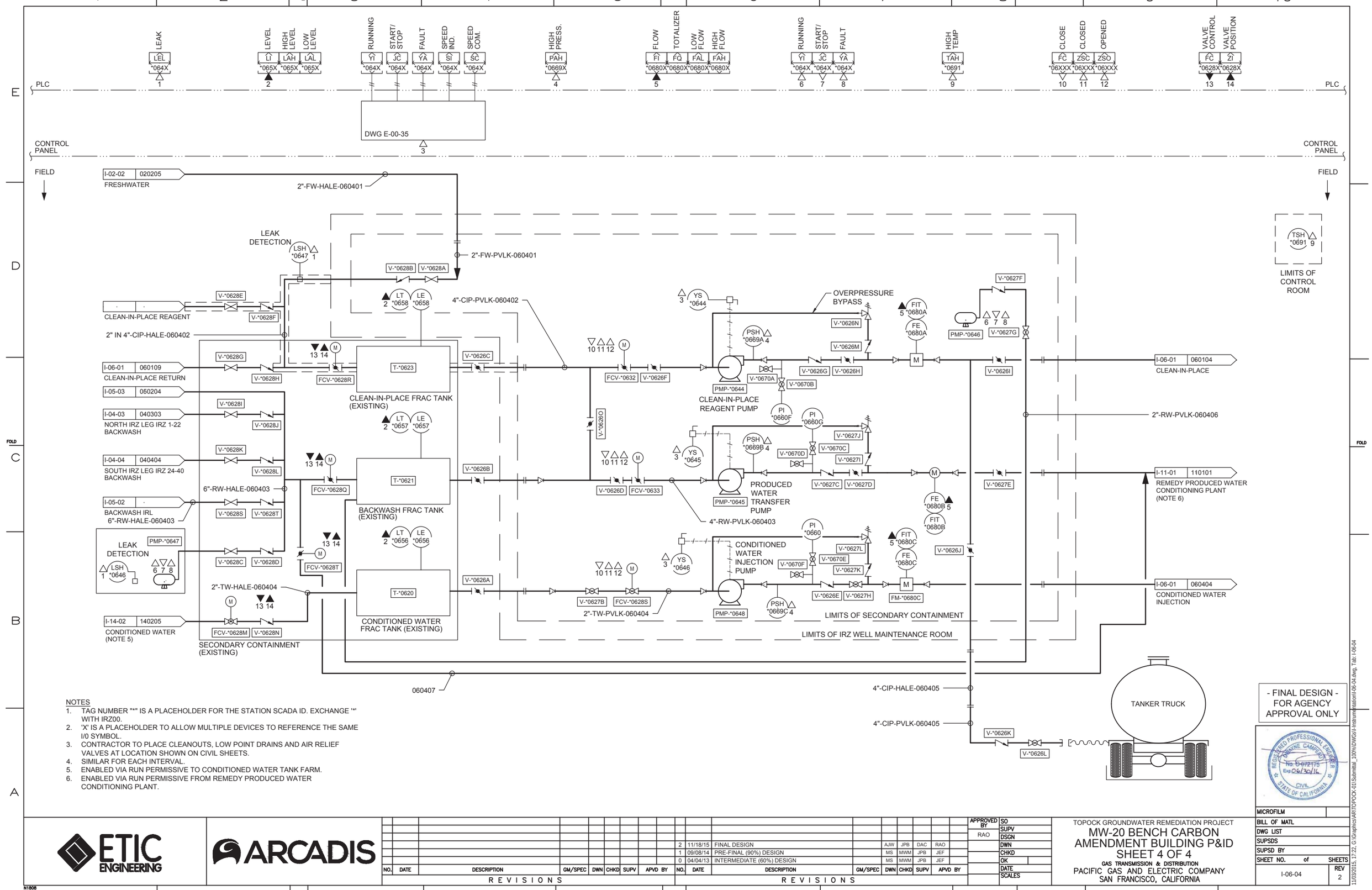

NOTES

1. TAG NUMBER "*" IS A PLACEHOLDER FOR THE STATION SCADA ID. EXCHANGE '*' WITH IRZ00.
2. 'X' IS A PLACEHOLDER TO ALLOW MULTIPLE DEVICES TO REFERENCE THE SAME I/0 SYMBOL.
3. CONTRACTOR TO PLACE CLEANOUTS, LOW POINT DRAINS AND AIR RELIEF VALVES AT LOCATION SHOWN ON CIVIL SHEETS.
4. SIMILAR FOR EACH INTERVAL.
5. ENABLED VIA RUN PERMISSIVE TO CONDITIONED WATER TANK FARM.
6. ENABLED VIA RUN PERMISSIVE FROM REMEDY PRODUCED WATER CONDITIONING PLANT.

- FINAL DESIGN - FOR AGENCY APPROVAL ONLY

REGISTERED PROFESSIONAL ENGINEER DWAYNE CAMPBELL No. C-072175 Exp 06/30/16 CIVIL STATE OF CALIFORNIA

ETIC ENGINEERING

ARCADIS

NO.	DATE	DESCRIPTION	GM/SPEC	DWN	CHKD	SUPV	APVD BY
2	11/18/15	FINAL DESIGN	AJW	JPB	DAC	RAO	
1	09/08/14	PRE-FINAL (90%) DESIGN	MS	MWM	JPB	JEF	
0	04/04/13	INTERMEDIATE (60%) DESIGN	MS	MWM	JPB	JEF	

REVISIONS

APPROVED BY	
RAO	SO
	SUPV
	DSGN
	DWN
	CHKD
	OK
	DATE
	SCALES

TOPOCK GROUNDWATER REMEDIATION PROJECT

MW-20 BENCH CARBON AMENDMENT BUILDING P&ID SHEET 4 OF 4

GAS TRANSMISSION & DISTRIBUTION

PACIFIC GAS AND ELECTRIC COMPANY
SAN FRANCISCO, CALIFORNIA

MICROFILM	
BILL OF MATL	
DWG LIST	
SUPSDS	
SUPSD BY	
SHEET NO.	of SHEETS
I-06-04	REV 2

11/03/2015, 17:22, G:\Graphics\ARR\TOPOCK-031\Submittal_100%\DWGs\Instrumentation\I-406-04.dwg, Tab: I-06-04

N180B

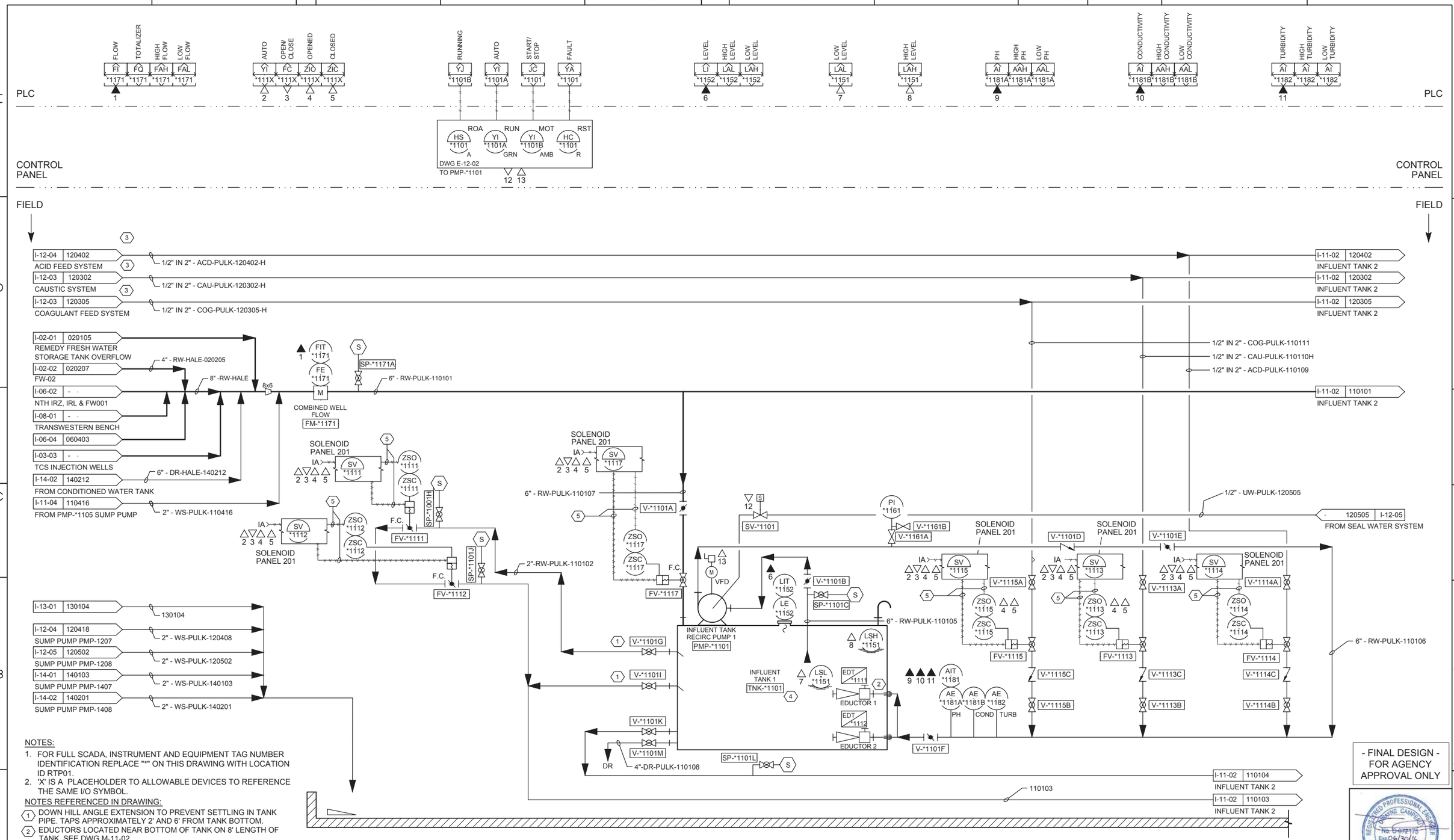

NOTES:

1. FOR FULL SCADA, INSTRUMENT AND EQUIPMENT TAG NUMBER IDENTIFICATION REPLACE "*" ON THIS DRAWING WITH LOCATION ID RTP01.
2. 'X' IS A PLACEHOLDER TO ALLOWABLE DEVICES TO REFERENCE THE SAME I/O SYMBOL.

NOTES REFERENCED IN DRAWING:

1. DOWN HILL ANGLE EXTENSION TO PREVENT SETTLING IN TANK PIPE. TAPS APPROXIMATELY 2' AND 6' FROM TANK BOTTOM.
2. EDUCTORS LOCATED NEAR BOTTOM OF TANK ON 8' LENGTH OF TANK. SEE DWG M-11-02
3. DOUBLE CONTAINED PIPE. 1/2" INSIDE 2".
4. SEE SPECIFICATION SECTION 33 16 13.14 AND DRAWING M-11-02.
5. AIR TUBING AND CONTROL WIRES TO SOLENOID PANEL 201, TYPICAL FOR ALL PNEUMATIC VALVES.

- FINAL DESIGN - FOR AGENCY APPROVAL ONLY

REGISTERED PROFESSIONAL ENGINEER — DWAYNE CAMPBELL — No. E-012175 — Exp. 06/30/16 — CIVIL — STATE OF CALIFORNIA

ETIC ENGINEERING

ARCADIS

NO.	DATE	DESCRIPTION	GM/SPEC	DWN	CHKD	SUPV	APVD	BY
2	11/18/15	FINAL DESIGN		AJW	JPB	DAC	RAO	
1	09/08/14	PRE-FINAL (90%) DESIGN		MBY			TPF	
0	04/05/13	INTERMEDIATE (60%) DESIGN		MBY			TPF	

REVISIONS

APPROVED BY	SO
RAO	SUPV
	DSGN
	DWN
	CHKD
	OK
	DATE
	SCALES

TOPOCK GROUNDWATER REMEDIATION PROJECT

P&ID INFLUENT TANK 1

GAS TRANSMISSION & DISTRIBUTION
PACIFIC GAS AND ELECTRIC COMPANY
SAN FRANCISCO, CALIFORNIA

MICROFILM	
BILL OF MATL	
DWG LIST	
SUPSDS	
SUPSD BY	
SHEET NO.	of SHEETS
I-11-01	REV 2

N1808

11/03/2015, 17:23, G:\Graphics\ARIT\OPOCK-01\Submittal_100%\DWGs\I-Instrumentation\I-11-01.dwg, Tab: I-11-01

PLC

CONTROL PANEL

FIELD

AUTO (YI *112XA) · OPEN/CLOSE (FC *112X) · OPENED (ZIO *112X) · CLOSED (ZIC *112X) — 1 2 3 4

LEVEL (LI *1154) · HIGH LEVEL (LAH *1154) · LOW LEVEL (LAL *1154) — 5

LOW LEVEL (LAL *1153) — 6

HIGH LEVEL (LAH *1153) — 7

PH (AI *1183A) · HIGH PH (AAH *1183A) · LOW PH (AAL *1183A) — 8

CONDUCTIVITY (AI *1183B) · HIGH CONDUCTIVITY (AAH *1183B) · LOW CONDUCTIVITY (AAL *1183B) — 9

TURBIDITY (AI *1184) · HIGH TURBIDITY (AAH *1184) · LOW TURBIDITY (AAL *1184) — 10

RUNNING (YI *1102) · AUTO (YI *1102A) · START/STOP (JC *1102S) · FAULT (YA *1102F)

ROA HS *1102 A · RUN YI *1102A GRN · MOT YI *1102B AMB · RST HC *1102 R

DWG E-02-02
TO PMP-*1102

11 12

I-11-01 | 120402 — ACID FEED SYSTEM — 1/2" IN 2" - ACD-PULK-120402 → I-11-03 | 120402 INFLUENT TANK 3

I-11-01 | 120302 — CAUSTIC SYSTEM — 1/2" IN 2" - CAU-PULK-120302-H → I-11-03 | 120302 INFLUENT TANK 3

I-11-01 | 120305 — COAGULANT FEED SYSTEM — 1/2" IN 2" - COG-PULK-120305 → I-11-03 | 120305 INFLUENT TANK 3

1/2" IN 2" - COG-PULK-110211

1/2" IN 2" - CAU-PULK-110210H

1/2" IN 2" - ACD-PULK-110209

I-11-01 | 110101 — INFLUENT TANK 1 — 6" -RW-PULK-110101 → I-11-03 | 110101 INFLUENT TANK 3

I-11-01 | 110103 — INFLUENT TANK 1 — 2" - RW-PULK-110103

I-11-01 | 110104 — INFLUENT TANK 1 — 2" - SL-PULK-110104

SOLENOID PANEL 202 IA 1 2 3 4 — SV *1121 — 5 — ZSO *1121 · ZSC *1121 — F.C. FV-*1121 — SP-*1102H — S

SOLENOID PANEL 202 IA 1 2 3 4 — SV *1122 — 5 — ZSO *1122 · ZSC *1122 — F.C. FV-*1122 — SP-*1102J — S

2"-RW-PULK-110202

SOLENOID PANEL 202 IA 1 2 3 4 — SV *1127 — 5 — ZSO *1127 · ZSC *1127 — F.C. FV-*1127

6" - RW-PULK-110207

V-*1102A

11 S — SV-*1102

PI *1162 — V-*1162B — V-*1162A

L 12 — M — VFD

INFLUENT TANK RECIRC PUMP 2 PMP-*1102

LIT *1154 · LE *1154 — 5

V-*1102B — S — SP-*1102C

6" - RW-PULK-110205

LSH *1153 — 7

1 V-*1102G

1 V-*1102I

INFLUENT TANK 2 TNK-*1102 — 4

LSL *1153 — 6

EDT *1121 — 2 — EDUCTOR 1

EDT *1122 — EDUCTOR 2

V-*1102K

V-*1102M

S — SP-*1102L

DR — 4"-DR-PULK-110208

2" - SL-PULK-110104

V-*1102F

AIT *1183 — 8 9 10 — AE *1183A PH · AE *1183B COND · AE *1184 TURB

SOLENOID PANEL 202 IA 1 2 3 4 — SV *1125 — 5 — ZSO *1125 · ZSC *1125 — V-*1102D — V-*1125A — FV-*1125 — V-*1125C — V-*1125B

SOLENOID PANEL 202 IA 1 2 3 4 — SV *1123 — 5 — ZSO *1123 · ZSC *1123 — V-*1102E — V-*1123A — FV-*1123 — V-*1123C — V-*1123B

SOLENOID PANEL 202 IA 1 2 3 4 — SV *1124 — 5 — ZSO *1124 · ZSC *1124 — 3 4 — V-*1124A — FV-*1124 — V-*1124C — V-*1124B

1/2" - UW-PULK-120505 → 120505 | I-12-05 SEAL WATER SYSTEM

6" - RW-PULK-110206

I-11-03 | 110104 — SLURRY TO INFLUENT TANK 3

I-11-03 | 110103 — INFLUENT TANK 3

NOTES:

1. FOR FULL SCADA, INSTRUMENT AND EQUIPMENT TAG NUMBER IDENTIFICATION REPLACE "*" ON THIS DRAWING WITH LOCATION ID RTP01.
2. 'X' IS A PLACEHOLDER TO ALLOWABLE DEVICES TO REFERENCE THE SAME I/O SYMBOL.

NOTES REFERENCED IN DRAWING:

1. DOWN HILL ANGLE EXTENSION TO PREVENT SETTLING IN TANK PIPE. TAPS APPROXIMATELY 2' AND 6' FROM TANK BOTTOM.
2. EDUCTORS LOCATED NEAR BOTTOM OF TANK ON 8' LENGTH OF TANK. SEE DWG M-11-02
3. DOUBLE CONTAINED PIPE. 1/2" INSIDE 2".
4. SEE SPECIFICATION SECTION 33 16 13.14 AND DRAWING M-11-02.
5. AIR TUBING AND CONTROL WIRES TO SOLENOID PANEL 201, TYPICAL FOR ALL PNEUMATIC VALVES.

- FINAL DESIGN - FOR AGENCY APPROVAL ONLY

REGISTERED PROFESSIONAL ENGINEER · DOMINIC CAMPAGNA · No. C 67175 · Exp 06/30/16 · CIVIL · STATE OF CALIFORNIA

ETIC ENGINEERING

ARCADIS

NO.	DATE	DESCRIPTION	GM/SPEC	DWN	CHKD	SUPV	APVD BY
2	11/18/15	FINAL DESIGN		AJW	JPB	DAC	RAO
1	9/8/14	PRE-FINAL (90%) DESIGN		MBY			TPF
0	4/5/13	INTERMEDIATE (60%) DESIGN		MBY			TPF

REVISIONS

APPROVED BY: RAO

SO · SUPV · DSGN · DWN · CHKD · OK · DATE · SCALES

TOPOCK GROUNDWATER REMEDIATION PROJECT

P&ID INFLUENT TANK 2

GAS TRANSMISSION & DISTRIBUTION
PACIFIC GAS AND ELECTRIC COMPANY
SAN FRANCISCO, CALIFORNIA

MICROFILM · BILL OF MATL · DWG LIST · SUPSDS · SUPSD BY

SHEET NO. I-11-02 of SHEETS · REV 2

N1808

11/03/2015, 17:23, G:\Graphics\ARTOPOCK-01\Submittal_100%\DWGs\I-Instrumentation\I-11-02.dwg, Tab: I-11-02

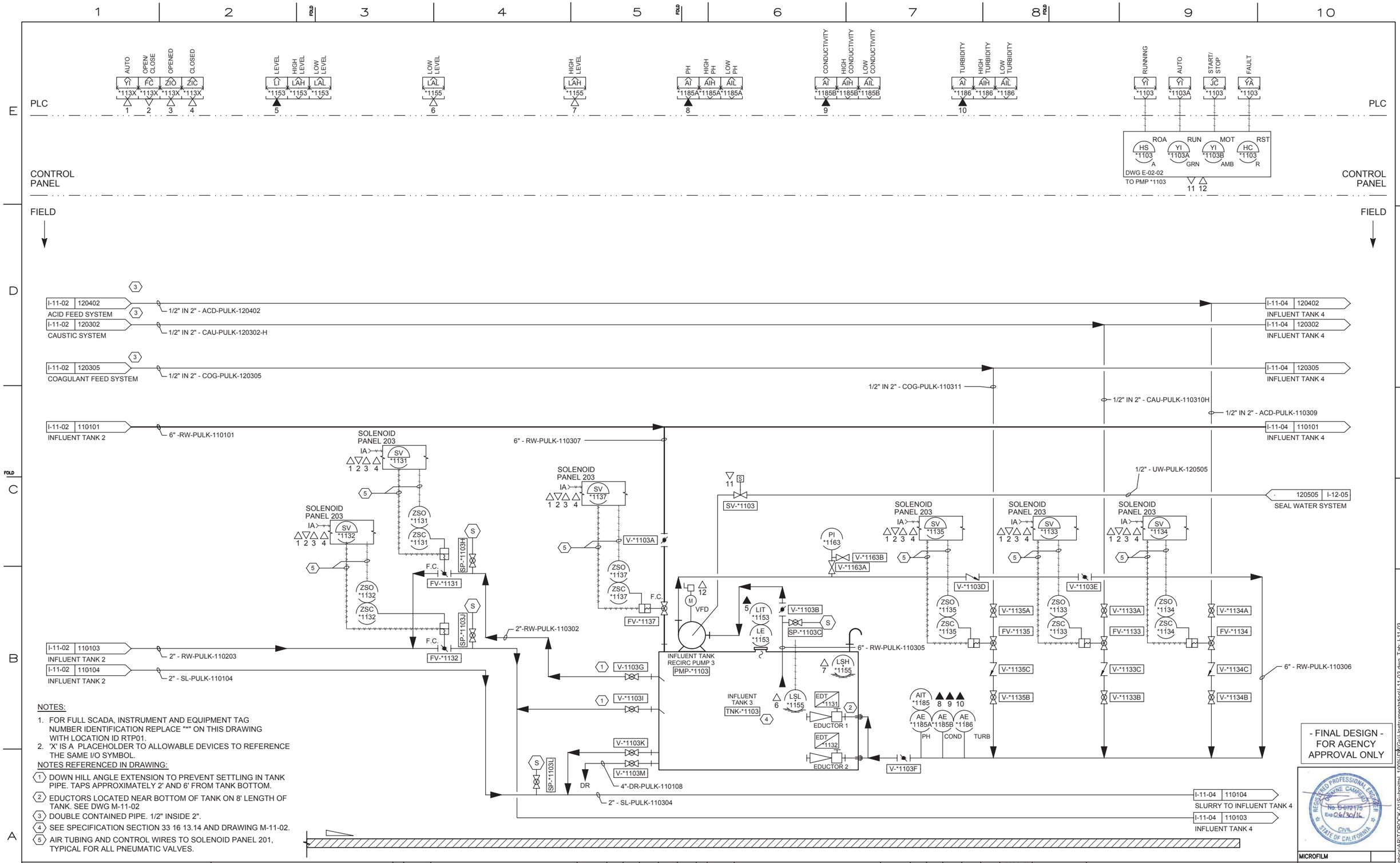

NOTES:

1. FOR FULL SCADA, INSTRUMENT AND EQUIPMENT TAG NUMBER IDENTIFICATION REPLACE "*" ON THIS DRAWING WITH LOCATION ID RTP01.
2. 'X' IS A PLACEHOLDER TO ALLOWABLE DEVICES TO REFERENCE THE SAME I/O SYMBOL.

NOTES REFERENCED IN DRAWING:

1. DOWN HILL ANGLE EXTENSION TO PREVENT SETTLING IN TANK PIPE. TAPS APPROXIMATELY 2' AND 6' FROM TANK BOTTOM.
2. EDUCTORS LOCATED NEAR BOTTOM OF TANK ON 8' LENGTH OF TANK. SEE DWG M-11-02
3. DOUBLE CONTAINED PIPE. 1/2" INSIDE 2".
4. SEE SPECIFICATION SECTION 33 16 13.14 AND DRAWING M-11-02.
5. AIR TUBING AND CONTROL WIRES TO SOLENOID PANEL 201, TYPICAL FOR ALL PNEUMATIC VALVES.

- FINAL DESIGN - FOR AGENCY APPROVAL ONLY

REGISTERED PROFESSIONAL ENGINEER DWAYNE CAMPBELL No. C-072175 Exp. 06/30/16 CIVIL STATE OF CALIFORNIA

ETIC ENGINEERING

ARCADIS

NO.	DATE	DESCRIPTION	GM/SPEC	DWN	CHKD	SUPV	APVD	BY
2	11/18/15	FINAL DESIGN		AJW	JPB	DAC	RAO	
1	9/8/14	PRE-FINAL (90%) DESIGN		MBY			TPF	
0	4/5/13	INTERMEDIATE (60%) DESIGN		MBY			TPF	

REVISIONS

APPROVED BY: RAO

SO / SUPV / DSGN / DWN / CHKD / OK / DATE / SCALES

TOPOCK GROUNDWATER REMEDIATION PROJECT

P&ID
INFLUENT TANK 3

GAS TRANSMISSION & DISTRIBUTION
PACIFIC GAS AND ELECTRIC COMPANY
SAN FRANCISCO, CALIFORNIA

MICROFILM
BILL OF MATL
DWG LIST
SUPSDS
SUPSD BY
SHEET NO. of SHEETS
I-11-03
REV 2

11/03/2015, 17:24, G:\Graphics\AR\TOPOCK-01\Submittal_100%\DWGs\I-Instrumentation\I-11-03.dwg, Tab: I-11-03

N1808

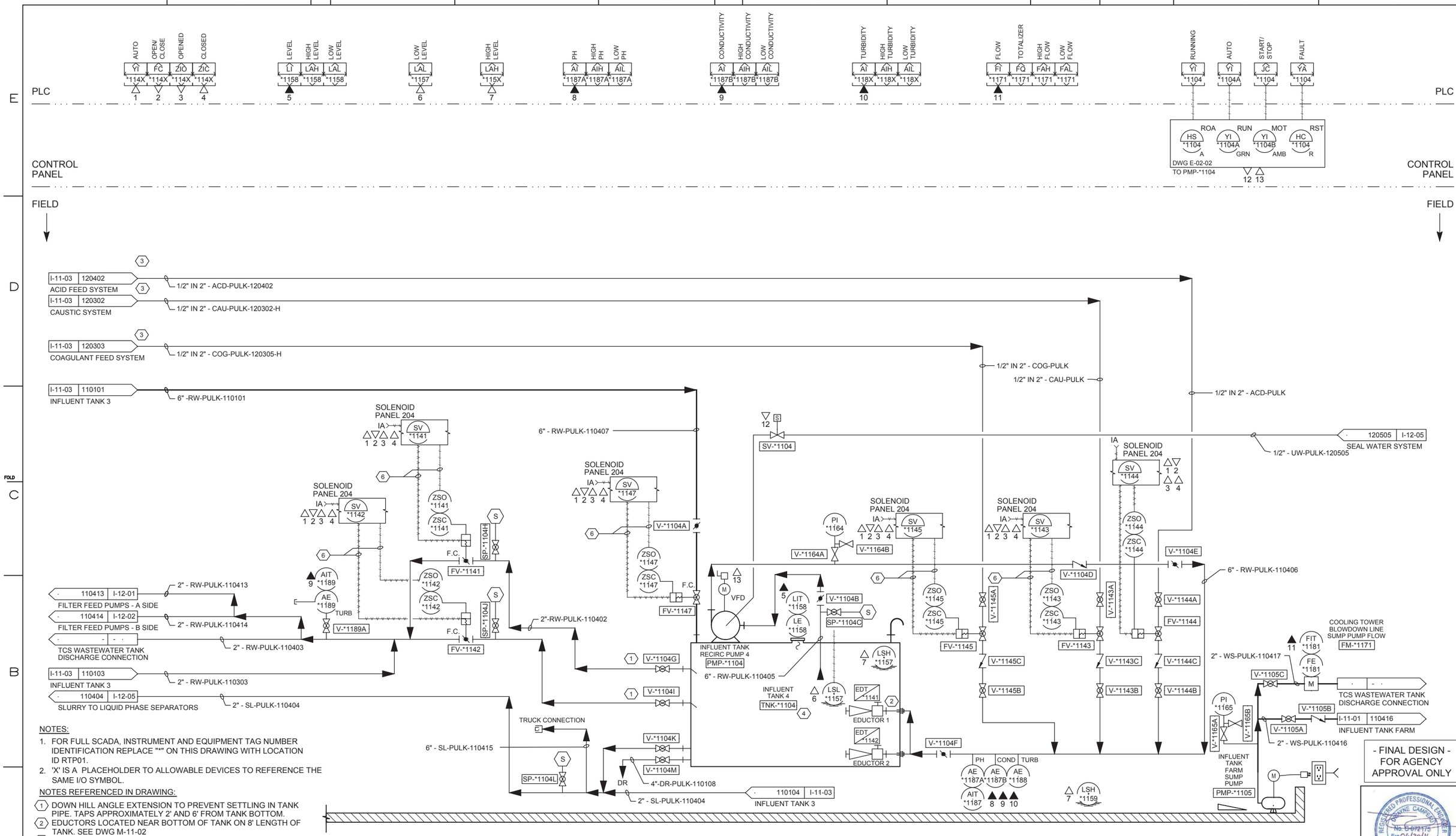

NOTES:

1. FOR FULL SCADA, INSTRUMENT AND EQUIPMENT TAG NUMBER IDENTIFICATION REPLACE "*" ON THIS DRAWING WITH LOCATION ID RTP01.
2. 'X' IS A PLACEHOLDER TO ALLOWABLE DEVICES TO REFERENCE THE SAME I/O SYMBOL.

NOTES REFERENCED IN DRAWING:

1. DOWN HILL ANGLE EXTENSION TO PREVENT SETTLING IN TANK PIPE. TAPS APPROXIMATELY 2' AND 6' FROM TANK BOTTOM.
2. EDUCTORS LOCATED NEAR BOTTOM OF TANK ON 8' LENGTH OF TANK. SEE DWG M-11-02
3. DOUBLE CONTAINED PIPE. 1/2" INSIDE 2".
4. SEE SPECIFICATION SECTION 33 16 13.14 AND DRAWING M-11-02.
5. AIR TUBING AND CONTROL WIRES TO SOLENOID PANEL 201, TYPICAL FOR ALL PNEUMATIC VALVES.

- FINAL DESIGN - FOR AGENCY APPROVAL ONLY

REGISTERED PROFESSIONAL ENGINEER DWAYNE CAMPBELL No. M 072179 Exp 06/30/16 CIVIL STATE OF CALIFORNIA

ETIC ENGINEERING

ARCADIS

NO.	DATE	DESCRIPTION	GM/SPEC	DWN	CHKD	SUPV	APVD BY
2	11/18/15	FINAL DESIGN		AJW	JPB	DAC	RAO
1	9/8/14	PRE-FINAL (90%) DESIGN		MBY			TPF
0	4/5/13	INTERMEDIATE (60%) DESIGN		MBY			TPF

REVISIONS

APPROVED BY	SO
RAO	SUPV
	DSGN
	DWN
	CHKD
	OK
	DATE
	SCALES

TOPOCK GROUNDWATER REMEDIATION PROJECT

P&ID
INFLUENT TANK 4

GAS TRANSMISSION & DISTRIBUTION
PACIFIC GAS AND ELECTRIC COMPANY
SAN FRANCISCO, CALIFORNIA

MICROFILM	
BILL OF MATL	
DWG LIST	
SUPSDS	
SUPSD BY	
SHEET NO.	of SHEETS
I-11-04	REV 2

11/03/2015, 17:24, G:\Graphics\ART\OPOCK-01\Submittal_100%\IDM\Gs\I-Instrumentation\I-11-04.dwg, Tab: I-11-04

N1808

PLC

CONTROL PANEL

FIELD

RUNNING · AUTO · START · SPEED COMMAND · FAULT · SPEED INDICATION
YI *12X0A · YI *12X0B · JC *12X0 · SC *12X0 · YA *12X0 · SI *12X0

AUTO · OPEN/CLOSE · OPENED · CLOSED
YI *12XXX · FC *12XXX · ZIO *12XXX · ZIC *12XXX

DIFF. PRESS. · HIGH DIFF. PRESS. · LOW DIFF. PRESS.
PDI *126X · PDAH *126X · PDAL *126X

FLOW · HIGH FLOW · LOW FLOW · TOTALIZER
FI *127X · FAH *127X · FAL *127X · FQ *127X

OPEN/CLOSE · OPENED · CLOSED
FC *12XX · ZIO *12XX · ZIC *12XX

RST: HC *12X0 — RED
ROA: HS *12X0 — A
RUNNING: YI *12X0C — GRN
MOT: YI *12X0D — AMB
DWG E-02-03

FILTER PACKAGE 1 (SPEC 4443 13.16)

SOLENOID PANEL *1201 · IA · SV *1211A · ZSO *1211A · ZSC *1211A
SOLENOID PANEL *1201 · IA · SV *1211C · ZSO *1211C · ZSC *1211C
SOLENOID PANEL *1201 · IA · SV *1212A · ZSO *1212A · ZSC *1212A
SOLENOID PANEL *1201 · IA · SV *1212C · ZSO *1212C · ZSC *1212C

DIFFERENTIAL PRESSURE PDIT-*1261 · PDIT *1261
DIFFERENTIAL PRESSURE PDIT-*1262 · PDIT *1262

CARTRIDGE FILTER COARSE 1A · FIL-*1211
CARTRIDGE FILTER FINE 1B · FIL-*1212

V-*1261C · V-*1261D · V-*1262C · V-*1262D

FV-*1211A · FV-*1211C · FV-*1212A · FV-*1212C

SP-*1211C

OPN · ZSO *1213 · ZSC *1213 · HC *1213 · FV-*1213 · 3/4"
OPN · ZSO *1214 · ZSC *1214 · HC *1214 · FV-*1214 · 3/4"

DR

3" -RW-PULK-120104
3" -RW-PULK-120109
3" -TW-PULK-120106
3" -RW-PULK-120104

120130
120132

V-*1211

2" -RW-PULK-120102
1/2" -UW-PULK-120505
I-12-05 | 120505
FROM SEAL WATER SYSTEM
I-11-04 | 110413
INFLUENT TANKS
2" -RW-PULK-110413

YS *1210 · SV-*1210 · PI *1261 · V-*1261B · V-*1261A · V-*1210B · V-*1210C · SP-*1210D · V-*1210A
FILTER FEED PUMP 1 · PMP-*1210

2x3

V-*1210E

2" -RW-PULK-120103
YS *1220 · SV-*1220 · PI *1262 · V-*1262B · V-*1262A · V-*1220B · V-*1220C · SP-*1220D · V-*1220A
FILTER FEED PUMP 2 · PMP-*1220
2" -RW-PULK-120101

2" -RW-PULK-120111

V-*1220E

SOLENOID PANEL *1201 · SV *1221A · ZSO *1221A · ZSC *1221A
SOLENOID PANEL *1201 · IA · SV *1221C · ZSO *1221C · ZSC *1221C
SOLENOID PANEL *1201 · IA · SV *1222A · ZSO *1222A · ZSC *1222A
SOLENOID PANEL *1201 · IA · SV *1222C · ZSO *1222C · ZSC *1222C

DIFFERENTIAL PRESSURE PDIT-*1263 · PDIT *1263
DIFFERENTIAL PRESSURE PDIT-*1264 · PDIT *1264

CARTRIDGE FILTER COARSE 2A · FIL-*1221
CARTRIDGE FILTER FINE 2B · FIL-*1222

V-*1263A · V-*1263B · V-*1264A · V-*1264B

FV-*1221A · FV-*1221C · FV-*1222A · FV-*1222C

SP-*1221C

OPN · ZSO *1223 · ZSC *1223 · HC *1223 · FV-*1223 · 3/4"
OPN · ZSO *1224 · ZSC *1224 · HC *1224 · FV-*1224 · 3/4"

DR

3" -RW-PULK-120105
3" -RW-PULK-120105

120131 · 120130 · 120133 · 120132 · 120130

SP-*1271A · FIT *1271 · FE *1271 · FM-*1271 · FILTER SYSTEM FLOW
2" -TW-PULK-120107
I-14-01 | 120107
A SIDE CONDITIONED WATER STORAGE TANK FARM

TCS WASTEWATER TANK DISCHARGE CONNECTION

3" -RW-PULK-120105
2" -RW-PULK-120110

FIT *1272 · FE *1272 · FM-*1272 · BYPASS FLOW
I-12-05 | 120130

DRAWING NOTES:

1. FOR FULL SCADA, INSTRUMENT AND EQUIPMENT TAG NUMBER IDENTIFICATION REPLACE "*" ON THIS DRAWING WITH LOCATION ID RTP01.
2. 'X' IS A PLACEHOLDER TO ALLOW MULTIPLE DEVICES TO REFERENCE THE SAME I/O SYMBOL.
3. COORDONATE PIPING AND EQUIPMENT WITH APPROVED DRAWINGS.
4. COORDONATE PIPINGROUTE FILTER DRAINS TO LIQUID PHASE SEPARATORS SEE DWG M-12-02

NOTES REFERENCED IN DRAWING:

1. DRAIN SLOPES TO SECONDARY CONTAINMENT
3. AIR TUBING AND CONTROL WIRES TO SOLENOID PANEL 301, TYPICAL FOR ALL PNEUMATIC VALVES.

- FINAL DESIGN - FOR AGENCY APPROVAL ONLY

REGISTERED PROFESSIONAL ENGINEER · DONNIE CAMPBELL · No. C 072176 · Exp 06/30/16 · CIVIL · STATE OF CALIFORNIA

ETIC ENGINEERING · ARCADIS

NO.	DATE	DESCRIPTION	GM/SPEC	DWN	CHKD	SUPV	APVD BY
2	11/18/15	FINAL DESIGN		AJW	JPB	DAC	RAO
1	9/8/14	PRE-FINAL (90%) DESIGN		MBY			TPF
0	4/5/13	INTERMEDIATE (60%) DESIGN		MBY			TPF

REVISIONS

APPROVED BY	
RAO	SO
	SUPV
	DSGN
	DWN
	CHKD
	OK
	DATE
	SCALES

TOPOCK GROUNDWATER REMEDIATION PROJECT

P&ID
FILTER SYSTEM A SIDE

GAS TRANSMISSION & DISTRIBUTION
PACIFIC GAS AND ELECTRIC COMPANY
SAN FRANCISCO, CALIFORNIA

MICROFILM	
BILL OF MATL	
DWG LIST	
SUPSDS	
SUPSD BY	
SHEET NO.	of SHEETS
I-12-01	REV 2

N1808

11/03/2015, 17:24, G:\Graphics\ART\OPOCK-01\Submittal_100%\DWGs\I-Instrumentation\I-12-01.dwg, Tab: I-12-01

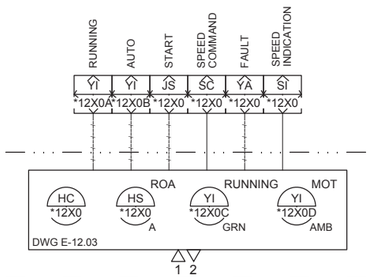

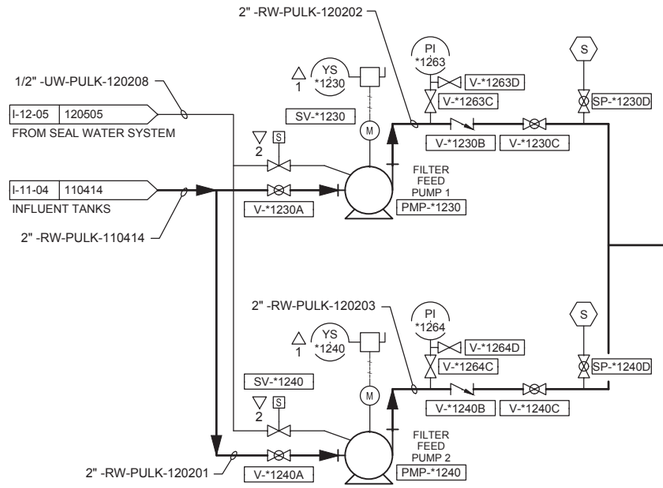

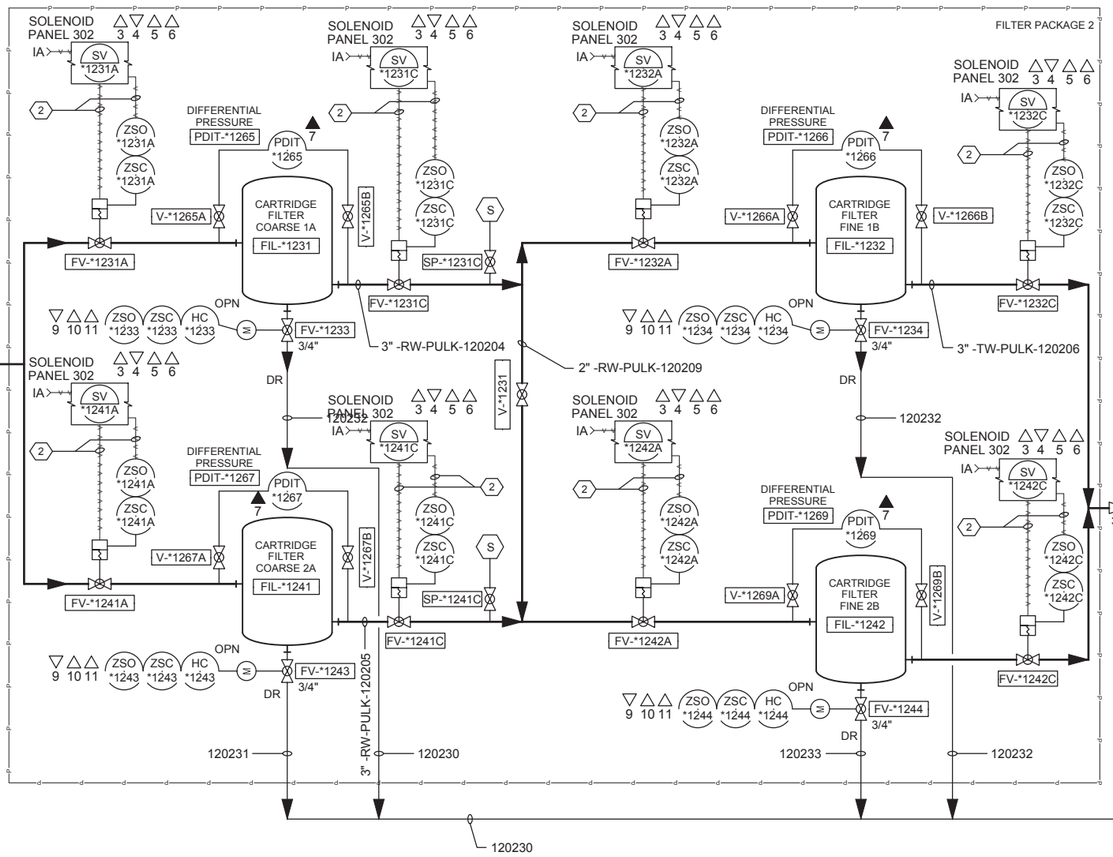

DRAWING NOTES:

1. FOR FULL SCADA, INSTRUMENT AND EQUIPMENT TAG NUMBER IDENTIFICATION REPLACE "*" ON THIS DRAWING WITH LOCATION ID RTP01.
2. 'X' IS A PLACEHOLDER TO ALLOW MULTIPLE DEVICES TO REFERENCE THE SAME I/O SYMBOL.
3. COORDONATE PIPING AND EQUIPMENT WITH APPROVED DRAWINGS.
4. COORDONATE PIPINGROUTE FILTER DRAINS TO LIQUID PHASE SEPARATORS SEE DWG M-12-02

NOTES REFERENCED IN DRAWING:

(1) DRAIN SLOPES TO SECONDARY CONTAINMENT

(2) AIR TUBING AND CONTROL WIRES TO SOLENOID PANEL 302, TYPICAL FOR ALL PNEUMATIC VALVES.

- FINAL DESIGN -
FOR AGENCY APPROVAL ONLY

REGISTERED PROFESSIONAL ENGINEER DWAYNE CAMPBELL No. 56721 Exp 06/30/16 CIVIL STATE OF CALIFORNIA

ETIC ENGINEERING

ARCADIS

NO.	DATE	DESCRIPTION	GM/SPEC	DWN	CHKD	SUPV	APVD BY
2	11/18/15	FINAL DESIGN		AJW	JPB	DAC	RAO
1	9/8/14	PRE-FINAL (90%) DESIGN		MBY			TPF
0	4/5/13	INTERMEDIATE (60%) DESIGN		MBY			TPF

REVISIONS

APPROVED BY	
RAO	SO
	SUPV
	DSGN
	DWN
	CHKD
	OK
	DATE
	SCALES

TOPOCK GROUNDWATER REMEDIATION PROJECT

P&ID
FILTER SYSTEM B SIDE

GAS TRANSMISSION & DISTRIBUTION
PACIFIC GAS AND ELECTRIC COMPANY
SAN FRANCISCO, CALIFORNIA

MICROFILM	
BILL OF MATL	
DWG LIST	
SUPSDS	
SUPSD BY	
SHEET NO. of SHEETS	
I-12-02	REV 2

N1808

11/03/2015, 17:24, G:\Graphics\ARTIOPOCK-01\Submittal_100%\DWGs\I-Instrumentation\I-12-02.dwg, Tab: I-12-02

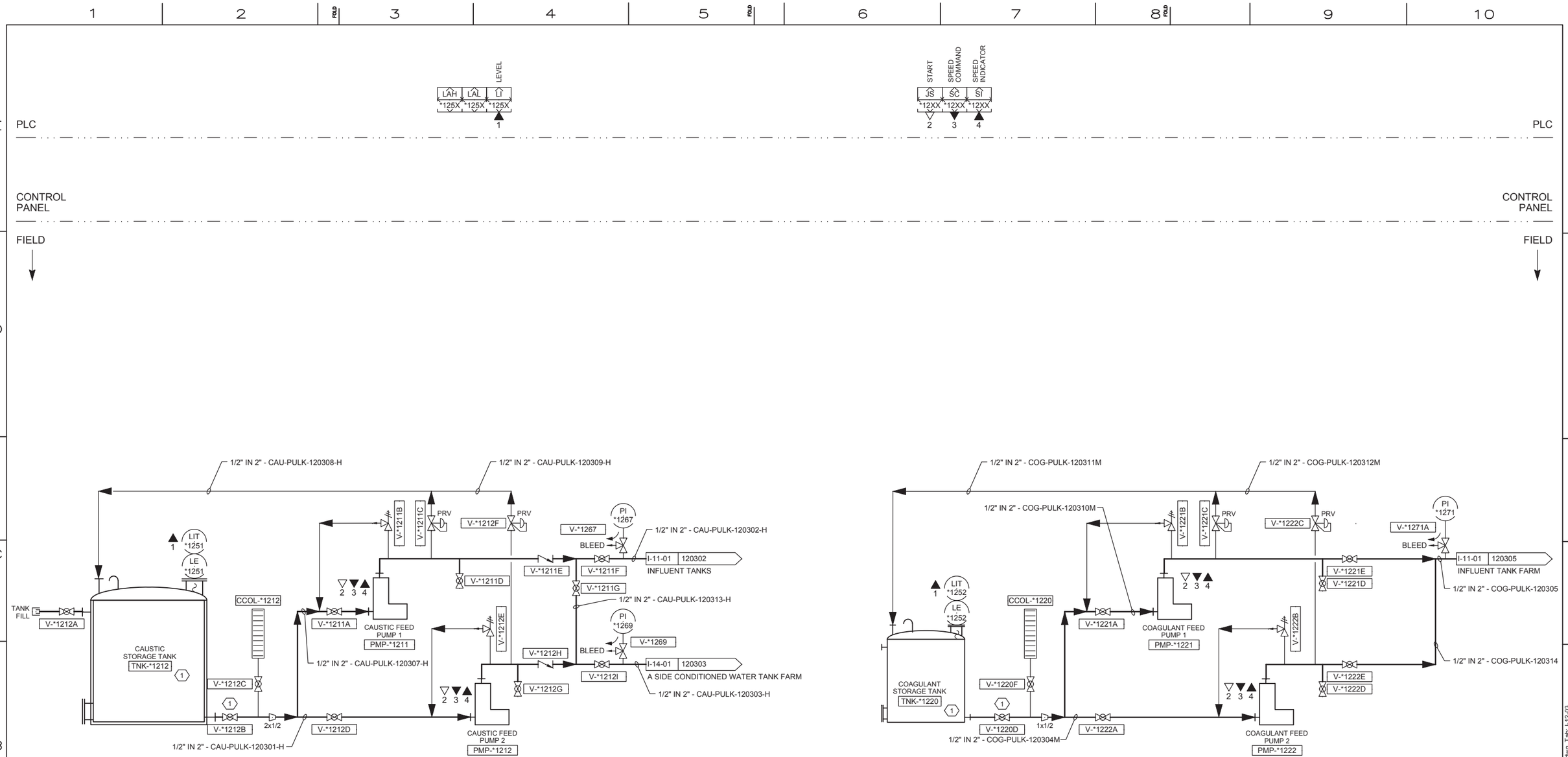

CAUSTIC SYSTEM

COAGULANT SYSTEM

NOTES:

1. FOR FULL SCADA, INSTRUMENT AND EQUIPMENT TAG NUMBER IDENTIFICATION REPLACE *** ON THIS DRAWING WITH LOCATION ID RTP01.
2. 'X' IS A PLACEHOLDER TO ALLOW MULTIPLE DEVICES TO REFERENCE THE SAME I/O SYMBOL.

NOTES REFERENCED IN DRAWING:

1. TANKS AND LINES ARE HEAT TRACED AND DOUBLE-CONTAINED.

- FINAL DESIGN - FOR AGENCY APPROVAL ONLY

REGISTERED PROFESSIONAL ENGINEER — DIANNE CAMPBELL — No. E 072175 — Exp 06/30/16 — CIVIL — STATE OF CALIFORNIA

ETIC ENGINEERING

ARCADIS

NO.	DATE	DESCRIPTION	GM/SPEC	DWN	CHKD	SUPV	APVD BY
2	11/18/15	FINAL DESIGN		AJW	JPB	DAC	RAO
1	9/8/14	PRE-FINAL (90%) DESIGN		MBY			TPF
0	4/5/13	INTERMEDIATE (60%) DESIGN		MBY			TPF

REVISIONS

APPROVED BY	RAO
SO	
SUPV	
DSGN	
DWN	
CHKD	
OK	
DATE	
SCALES	

TOPOCK GROUNDWATER REMEDIATION PROJECT

P&ID CAUSTIC AND COAGULANT SYSTEM

GAS TRANSMISSION & DISTRIBUTION

PACIFIC GAS AND ELECTRIC COMPANY
SAN FRANCISCO, CALIFORNIA

MICROFILM	
BILL OF MATL	
DWG LIST	
SUPSDS	
SUPSD BY	
SHEET NO. of SHEETS	
I-12-03	REV 2

N1808

11/03/2015, 17:25, G:\Graphics\ARTOPOCK-01\Submittal_100%\DWG\I-Instrumentation\I-12-03.dwg, Tab: I-12-03

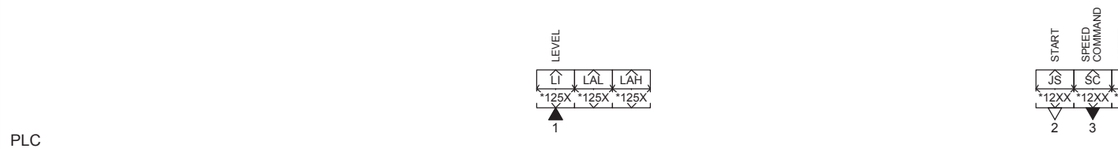

PLC

PLC

CONTROL PANEL

CONTROL PANEL

FIELD

FIELD

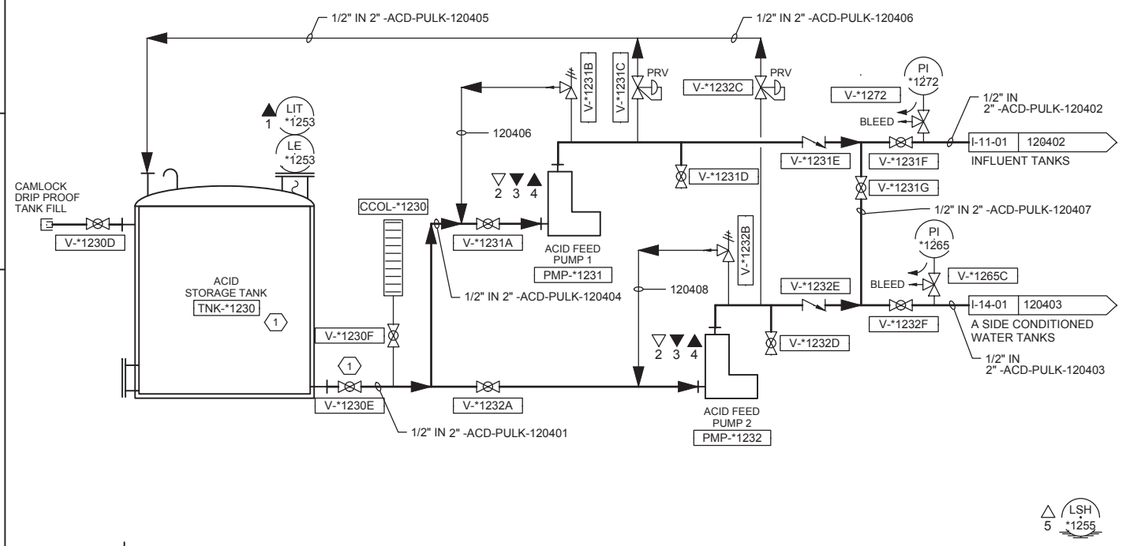

ACID SYSTEM

FUTURE

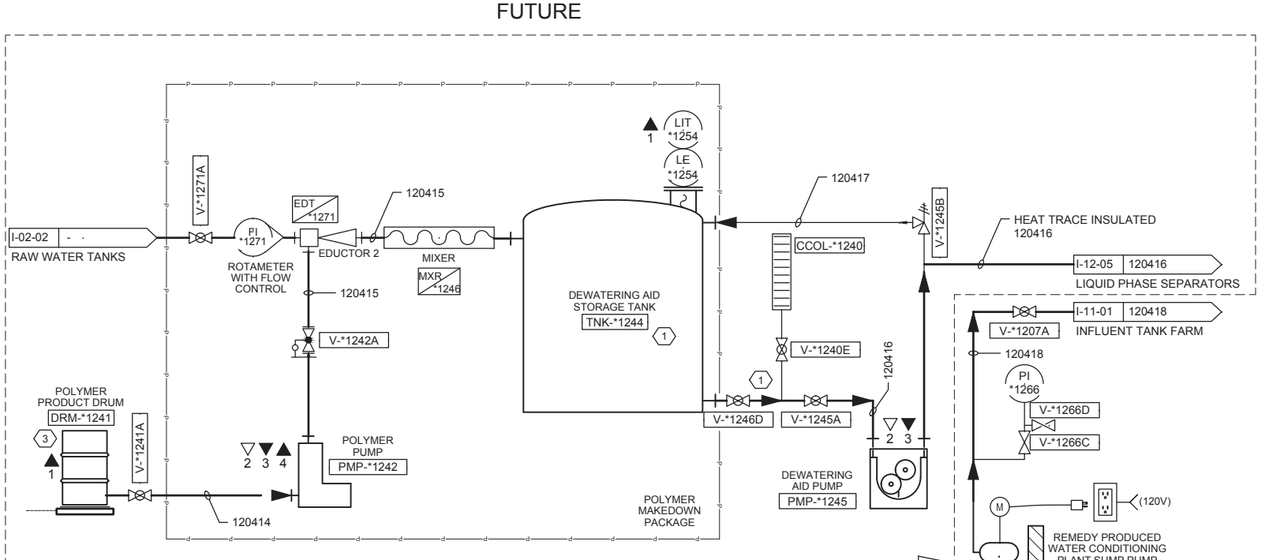

DEWATERING AID FEED SYSTEM

NOTES:

1. FOR FULL SCADA, INSTRUMENT AND EQUIPMENT TAG NUMBER IDENTIFICATION REPLACE "*" ON THIS DRAWING WITH LOCATION ID RTP01.
2. 'X' IS A PLACEHOLDER TO ALLOW MULTIPLE DEVICES TO REFERENCE THE SAME I/O SYMBOL.

NOTES REFERENCED IN DRAWING:

1. TANKS AND LINES ARE HEAT TRACED AND DOUBLE-CONTAINED.
2. CLEANING & WATER CONDITIONING REAGANT CONTAINERS ARE FUTURE AND NOT SHOWN HERE.
3. INSULATE DRUM AND HEAT TRACE TUBING CONNECTING PUMP ON FEEDER PACKAGE.

REGISTERED PROFESSIONAL ENGINEER — DWAYNE CAMPBELL — No. C072175 — Exp 06/30/16 — CIVIL — STATE OF CALIFORNIA

- FINAL DESIGN -
FOR AGENCY APPROVAL ONLY

ETIC ENGINEERING

ARCADIS

NO.	DATE	DESCRIPTION	GM/SPEC	DWN	CHKD	SUPV	APVD BY
2	11/18/15	FINAL DESIGN		AJW	JPB	DAC	RAO
1	9/8/14	PRE-FINAL (90%) DESIGN		MBY			TPF
0	4/5/13	INTERMEDIATE (60%) DESIGN		MBY			TPF

REVISIONS

APPROVED BY	
RAO	SO
	SUPV
	DSGN
	DWN
	CHKD
	OK
	DATE
	SCALES

TOPOCK GROUNDWATER REMEDIATION PROJECT

P&ID
ACID AND DEWATERING AID SYSTEMS

GAS TRANSMISSION & DISTRIBUTION

PACIFIC GAS AND ELECTRIC COMPANY
SAN FRANCISCO, CALIFORNIA

MICROFILM	
BILL OF MATL	
DWG LIST	
SUPSDS	
SUPSD BY	
SHEET NO.	of SHEETS
I-12-04	REV 2

N1808

11/03/2015, 17:25, G:\Graphics\ARIT\OPOCK-01\Submittal_100%\DWGs\I-Instrumentation\I-12-04.dwg, Tab: I-12-04

PLC

AUTO YI *1210 1
OPEN/CLOSE FC *1210 2
OPENED ZIO *1210 3
CLOSED ZIC *1210 4
LOW PRESS. PAL *1254 5
HIGH LEVEL LAH *125X 6
AUTO YI *1212B 7
RUNNING YI *1212A 8
FAULT YA *1212 9

PLC

CONTROL PANEL

CONTROL PANEL

FIELD

FIELD

I-13-05 | 130505 → 130505

SOLENOID PANEL 601
IA
SOV *1210 (1 2 3 4)
1
ZSO *1210
ZSC *1210
PSL *1254 (5)
V-*1254B
V-*1254A
UTILITY AIR
2" - UA-HEAD-120504
FV-*1210

I-11-04 | 110404
INFLUENT TANK FARM
2" - SL-PULK-110404

I-12-04 | 120416
DEWATERING AID
2" - DEW-PULK-120416

I-12-02 | 120230
FILTER DRAINS
120230

I-12-01 | 120230
FILTER DRAINS
120130

SOLIDS PUMP
PMP-*1201
2" - SL-PULK-120501
2" - SL-PULK-120503
V-*1211H
V-*1212J

6 LSH *1251
LIQUID PHASE SEPARATOR 1
LPS-*1211
V-*1211I

6 LSH *1252
LIQUID PHASE SEPARATOR 2
LPS-*1212
V-*1212K

120502 | I-11-01
INFLUENT TANK FARM SUMP
2" - WS-PULK-120502

V-*1208B
V-*1208A
(120V)
*PI *1253
V-*1253B
V-*1253A
6 LSH *1253
LIQUID PHASE SEPARATOR SUMP PUMP
PMP-*1208

NOTES:

1. FOR FULL SCADA, INSTRUMENT AND EQUIPMENT TAG NUMBER IDENTIFICATION REPLACE "*" ON THIS DRAWING WITH LOCATION ID RTP01.
2. LIQUID PHASE SEPARATORS SUPPLIED BY OWNER. COORDINATE PIPING HOSES AND FITTINGS WITH EQUIPMENT.

NOTES REFERENCED IN DRAWING:

(1) AIR TUBING AND CONTROL WIRES TO SOLENOID PANEL 601, TYPICAL FOR ALL PNEUMATIC VALVES.

LIQUID PHASE SEPARATORS

7 8 9
ROA RUN
HS *1212 A
YI *1212 GRN
VFD-*1212
PIT *1268
PI *1268
V-*1261B
V-*1268A
SEAL WATER TANK
TNK-*1211
M
SEAL WATER PUMP
PMP-*1268
SEAL WATER PRESSURE
PIT-*1261
SEAL WATER PACKAGED SYSTEM
I-02-02 | - | -
FROM TCS RAW WATER STORAGE TANKS
2x1-1/4
1x1-1/2
DOUBLE CHECK
V-*1268C
V-*1268D
1.5" - FW-PULK-120505
STR-*1268
V-*1268E

1.5x0.5 I-12-01 | 120505
SEAL WATER TO FILTER FEED PUMPS PMP-*310 & PMP-*320

1.5x0.5 I-12-02 | 120505
SEAL WATER TO FILTER FEED PUMPS PMP-*330 & PMP-*340

1.5x0.5 I-11-01 | 120505
SEAL WATER TO INFLUENT TANK RECIRC PUMP PMP-*201

1.5x0.5 I-11-02 | 120505
SEAL WATER TO FILTER TANK RECIRC PUMP PMP-*202

1.5x0.5 I-11-03 | 120505
SEAL WATER TO INFLUENT TANK RECIRC PUMP PMP-*203

1.5x0.5 I-11-04 | 120505
SEAL WATER TO FILTER TANK RECIRC PUMP PMP-*204
FUTURE

SEAL WATER SYSTEM

V-*1203F
PI *1262
V-*1270
120515
UA USERS
IA USERS
120516
RECEIVER
DRM-*1203
V-*1203G
V-*1201C
AIR
AIR DRYER/FILTER
DRYER-*1202
AIR COMPRESSOR
CMP-*1201
V-*1201D

AIR COMPRESSOR

- FINAL DESIGN - FOR AGENCY APPROVAL ONLY

REGISTERED PROFESSIONAL ENGINEER DWAYNE CAMPBELL No. C 072175 Exp 06/30/16 CIVIL STATE OF CALIFORNIA

ETIC ENGINEERING
ARCADIS

NO.	DATE	DESCRIPTION	GM/SPEC	DWN	CHKD	SUPV	APVD	BY
2	11/18/15	FINAL DESIGN		AJW	JPB	DAC	RAO	
1	9/8/14	PRE-FINAL (90%) DESIGN		MBY			TPF	
0	4/5/13	INTERMEDIATE (60%) DESIGN		MBY			TPF	

REVISIONS

APPROVED BY: RAO
SO
SUPV
DSGN
DWN
CHKD
OK
DATE
SCALES

TOPOCK GROUNDWATER REMEDIATION PROJECT
P&ID
LIQUID PHASE SEPARATORS & AIR COMPRESSOR
GAS TRANSMISSION & DISTRIBUTION
PACIFIC GAS AND ELECTRIC COMPANY
SAN FRANCISCO, CALIFORNIA

MICROFILM
BILL OF MATL
DWG LIST
SUPSDS
SUPSD BY
SHEET NO. I-12-05 of SHEETS
REV 2

N1808

11/03/2015, 17:25, G:\Graphics\ART\TOPOCK-01\Submittal_100%\DWG\I-Instrumentation\I-12-05.dwg, Tab: I-12-05

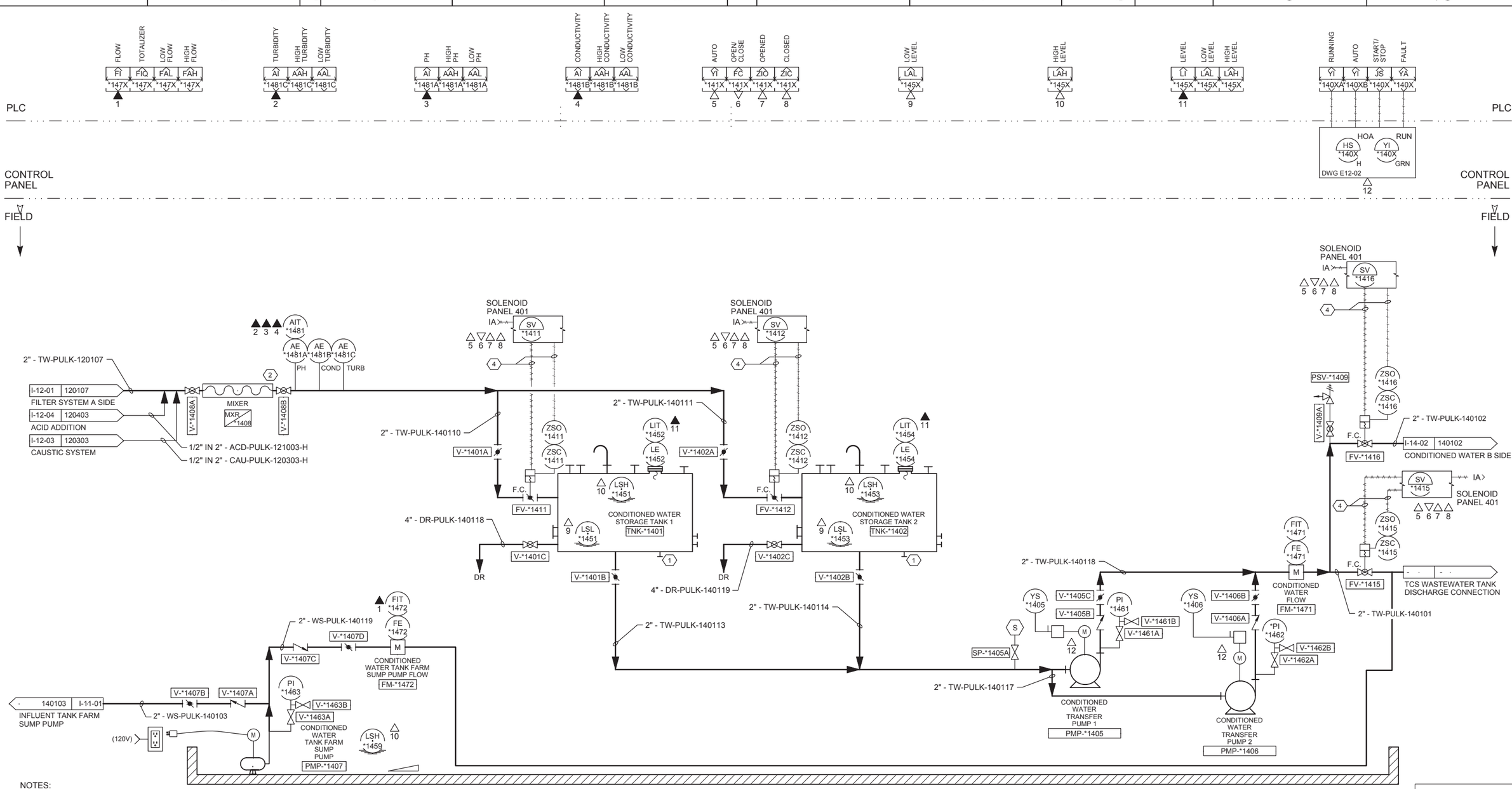

NOTES:

1. FOR FULL SCADA, INSTRUMENT AND EQUIPMENT TAG NUMBER IDENTIFICATION REPLACE "*" ON THIS DRAWING WITH LOCATION ID RTP01.
2. 'X' IS A PLACEHOLDER TO ALLOW MULTIPLE DEVICES TO REFERENCE THE SAME I/O SYMBOL.

NOTES REFERENCED IN DRAWING:

1. NOZZLES PROVIDED FOR FUTURE RECIRCULATION PUMP AND EDUCTORS, PH, CONDUCTIVITY AND TURBIDITY ANALYZERS AND CHEMICAL FEED TO TANKS.
2. MINIMUM DISTANCE TO BE DETERMINED.
3. BLOWDOWN LINE CONNECTS TO TCS WASTEWATER TANK AND IS PUMPED FROM THERE TO EVAPORATION PONDS.
4. AIR TUBING AND CONTROL WIRES TO SOLENOID PANEL 401, TYPICAL FOR ALL PNEUMATIC VALVES.

- FINAL DESIGN - FOR AGENCY APPROVAL ONLY

REGISTERED PROFESSIONAL ENGINEER DWAYNE CAMPBELL No. C-61/2170 Exp 06/30/16 CIVIL STATE OF CALIFORNIA

ETIC ENGINEERING

ARCADIS

NO.	DATE	DESCRIPTION	GM/SPEC	DWN	CHKD	SUPV	APVD BY
2	11/18/15	FINAL DESIGN		AJW	JPB	DAC	RAO
1	9/8/14	PRE-FINAL (90%) DESIGN		MBY			TPF
0	4/5/13	INTERMEDIATE (60%) DESIGN		MBY			TPF

REVISIONS

APPROVED BY	
RAO	SO
	SUPV
	DSGN
	DWN
	CHKD
	OK
	DATE
	SCALES

TOPOCK GROUNDWATER REMEDIATION PROJECT

P&ID CONDITIONED WATER STORAGE TANK FARM A SIDE

GAS TRANSMISSION & DISTRIBUTION

PACIFIC GAS AND ELECTRIC COMPANY

SAN FRANCISCO, CALIFORNIA

MICROFILM	
BILL OF MATL	
DWG LIST	
SUPSDS	
SUPSD BY	
SHEET NO.	of SHEETS
I-14-01	REV 2

N1808

11/03/2015, 17:27, G:\Graphics\ARTOPOCK-01\Submittal_100%\DWGs\I-Instrumentation\I-14-01.dwg, Tab: I-14-01

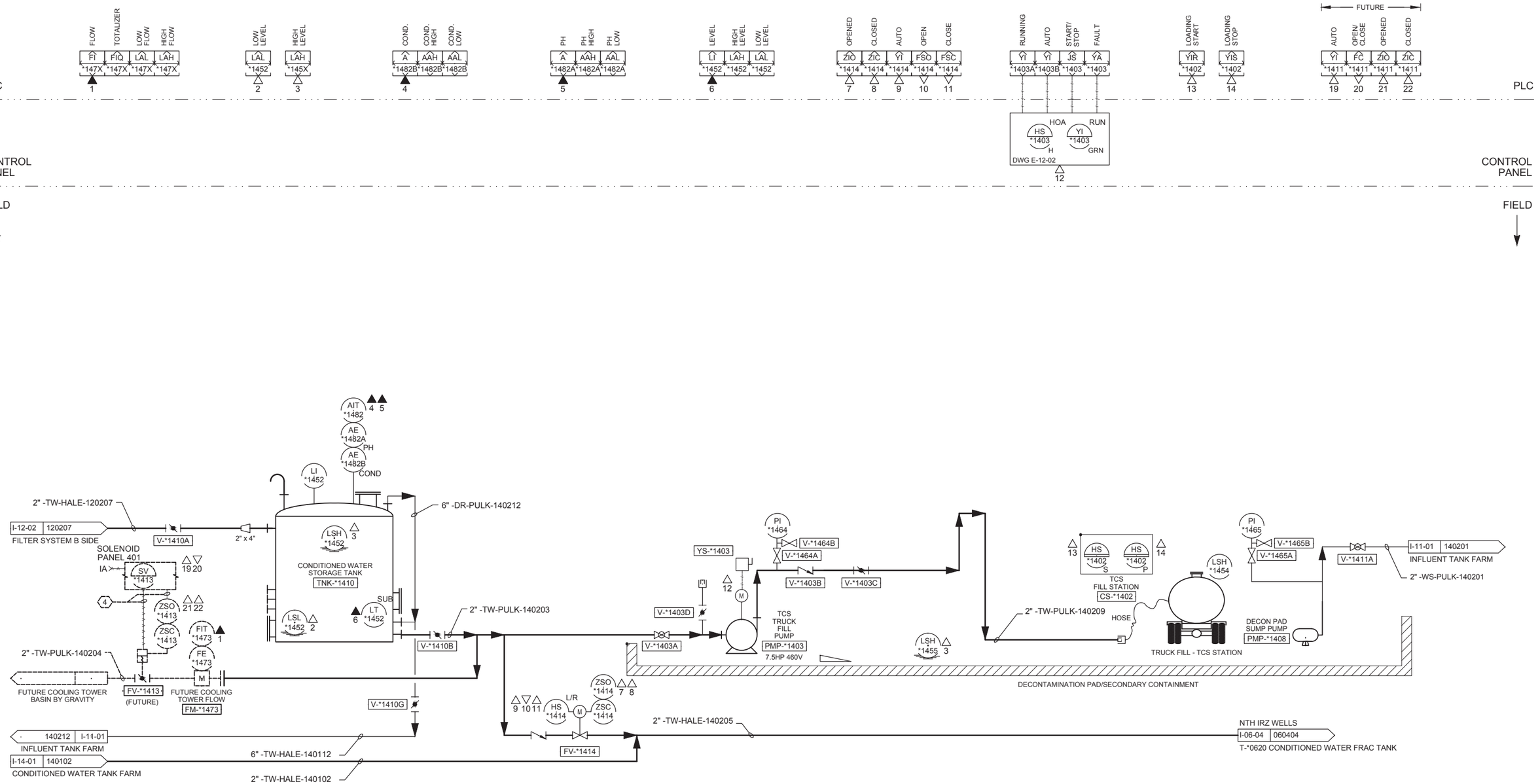

NOTES:

1. FOR FULL SCADA, INSTRUMENT AND EQUIPMENT TAG NUMBER IDENTIFICATION REPLACE "*" ON THIS DRAWING WITH LOCATION ID RTP01.
2. 'X' IS A PLACEHOLDER TO ALLOW MULTIPLE DEVICES TO REFERENCE THE SAME I/O SYMBOL.

- FINAL DESIGN - FOR AGENCY APPROVAL ONLY

REGISTERED PROFESSIONAL ENGINEER — DWAYNE CAMPBELL — No. C-072176 — Exp 06/30/16 — CIVIL — STATE OF CALIFORNIA

ETIC ENGINEERING

ARCADIS

NO.	DATE	DESCRIPTION	GM/SPEC	DWN	CHKD	SUPV	APVD BY
2	11/18/15	FINAL DESIGN		AJW	JPB	DAC	RAO
1	9/8/14	PRE-FINAL (90%) DESIGN		MBY			TPF
0	4/5/13	INTERMEDIATE (60%) DESIGN		MBY			TPF

REVISIONS

APPROVED BY	SO
	SUPV
RAO	DSGN
	DWN
	CHKD
	OK
	DATE
	SCALES

TOPOCK GROUNDWATER REMEDIATION PROJECT

P&ID CONDITIONED WATER B SIDE

GAS TRANSMISSION & DISTRIBUTION

PACIFIC GAS AND ELECTRIC COMPANY
SAN FRANCISCO, CALIFORNIA

MICROFILM	
BILL OF MATL	
DWG LIST	
SUPSDS	
SUPSD BY	
SHEET NO.	of SHEETS
I-14-02	REV 2

N1808

11/03/2015, 17:20, G:\Graphics\ARTOPOCK-01\Submittal_100%\DWGs\I-Instrumentation\I-14-02.dwg, Tab: I-14-02

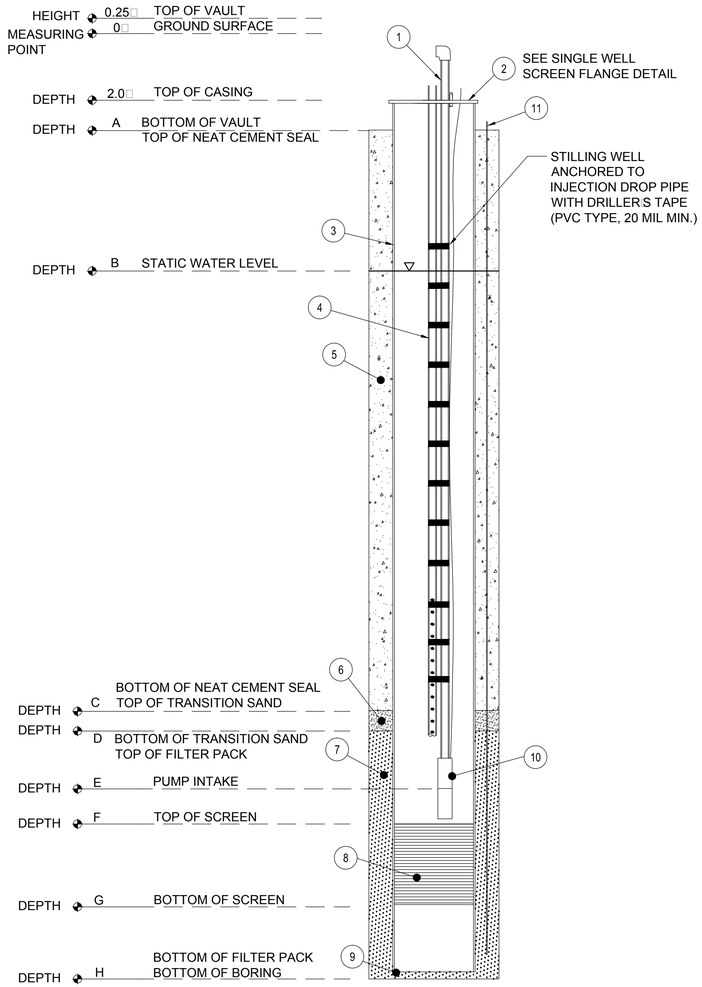

A SINGLE SCREEN EXTRACTION WELL DETAIL
NTS

LEGEND:

(1) REFERENCE ITEM NUMBER IN SCHEDULE.

NOTES:

1. ALL DEPTH INTERVALS ARE IN FEET BELOW GROUND SURFACE. SEE WELL CONSTRUCTION SCHEDULE SHEET M-00-06 FOR REPRESENTATIVE DEPTHS.
2. WELL DIAMETER EXAGGERATED TO SHOW DETAIL.
3. WELL CASING 150□OR SHALLOWER SHALL BE SCH80 PVC. WELL CASINGS DEEPER THAN 150□SHALL BE 316L SS.
4. ALL WELL SEALS ARE 100% NEAT CEMENT WITH UP TO 6% BENTONITE.
5. ALL ABOVE-GRADE PIPING AND INSTRUMENTATION INSTALLED IN ACCORDANCE WITH THE P□ID AND THE WELLHEAD MECHANICAL LAYOUT.

SCHEDULE

ITEM	DESCRIPTION
1	1-1/4" PVC DROP PIPE
2	CUSTOM TAPERED WELL FLANGE
3	WELL CASING (SEE NOTE 3)
4	1" PVC TUBING (STILLING WELL WITH PRESSURE TRANSDUCER)
5	ANNULAR SPACE, NEAT CEMENT GROUT (SEE NOTE 4)
6	ANNULAR SPACE, TRANSITION SAND (SIZE TBD)
7	ANNULAR SPACE, FILTER PACK (SIZE TBD)
8	WELL SCREEN (316L SS, WIRE-WRAP)
9	SUMP
10	GROUNDWATER EXTRACTION PUMP
11	1" PIEZOMETER

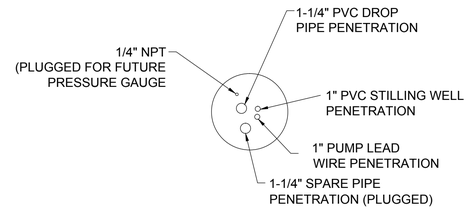

B SINGLE SCREEN WELL FLANGE DETAIL
NTS

- FINAL DESIGN - FOR AGENCY APPROVAL ONLY

REGISTERED PROFESSIONAL ENGINEER BENJAMIN J. WUESTL C 67811 EXP 6/30/17 STATE OF CALIFORNIA

ETIC ENGINEERING

ARCADIS

NO.	DATE	DESCRIPTION	GM/SPEC	DWN	CHKD	SUPV	APVD BY
2	11/18/15	FINAL DESIGN	AJW	KLD	BW	RAO	
1	09/08/14	PRE-FINAL (90%) DESIGN	LUK	JPB	JPB	JEF	
0	04/05/13	INTERMEDIATE (60%) DESIGN	BEH	JPB	JPB	JEF	

REVISIONS

APPROVED BY	
RAO	SO
	SUPV
	DSGN
	DWN
	CHKD
	OK
	DATE
	SCALES

TOPOCK GROUNDWATER REMEDIATION PROJECT

TCS LOOP EXTRACTION WELL CONSTRUCTION DETAILS

GAS TRANSMISSION & DISTRIBUTION
PACIFIC GAS AND ELECTRIC COMPANY
SAN FRANCISCO, CALIFORNIA

MICROFILM	
BILL OF MATL	
DWG LIST	
SUPSDS	
SUPSD BY	
SHEET NO.	of SHEETS
M-03-01	REV 2

N1808

11/02/2015, 09:48, G:\Graphics\ARR\TOPOCK-01\Submittal_100%\DWG\sM-Mechanical\M-03-01.dwg, Tab: M-03-01

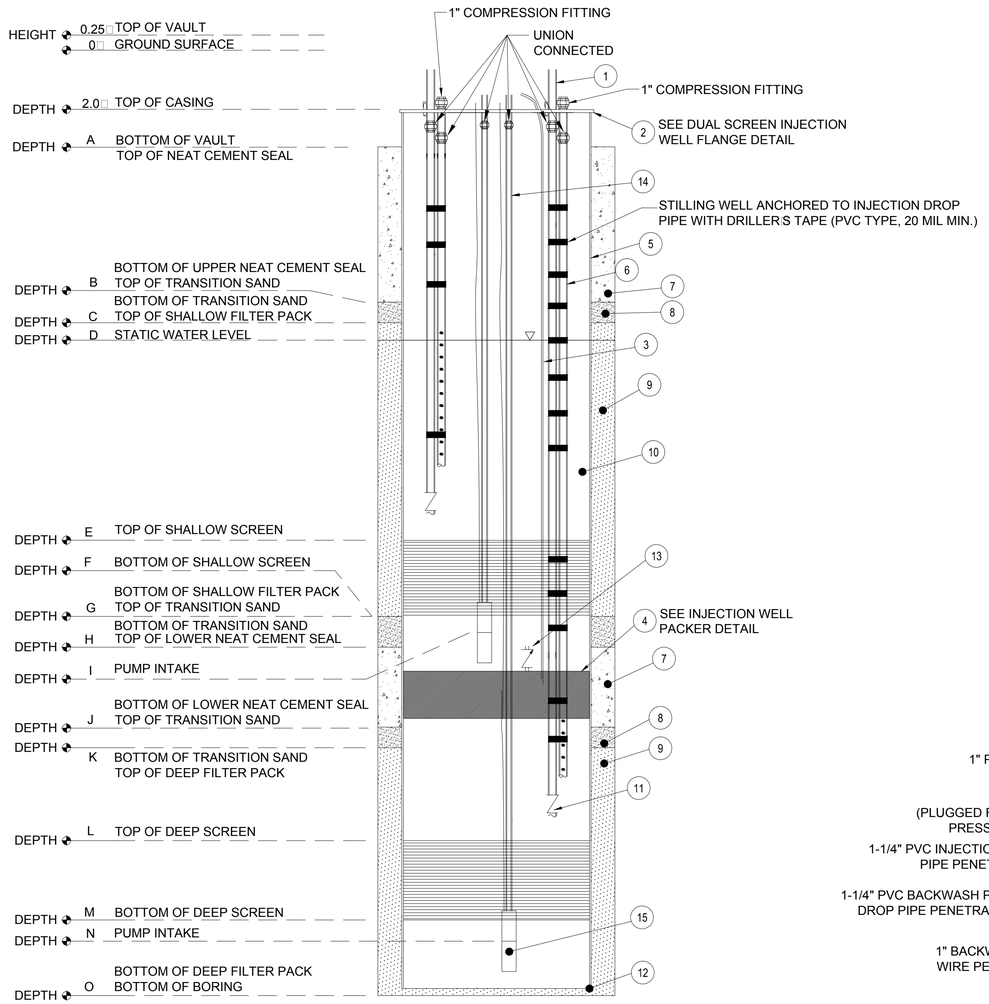

A DUAL SCREEN INJECTION WELL WITH BACKWASH PUMPS DETAIL

NTS

LEGEND:

(1) REFERENCE ITEM NUMBER IN SCHEDULE.

NOTES:

1. ALL DEPTH INTERVALS ARE IN FEET BELOW GROUND SURFACE. SEE WELL CONSTRUCTION SCHEDULE SHEET M-00-06 FOR REPRESENTATIVE DEPTHS.
2. WELL DIAMETER EXAGGERATED TO SHOW DETAIL.
3. WELL CASING 150' OR SHALLOWER SHALL BE SCH80 PVC. WELL CASINGS DEEPER THAN 150' SHALL BE 316L SS.
4. ALL WELL SEALS ARE 100% NEAT CEMENT WITH UP TO 6% BENTONITE.
5. ALL ABOVE-GRADE PIPING AND INSTRUMENTATION INSTALLED IN ACCORDANCE WITH THE P&ID AND THE WELLHEAD MECHANICAL LAYOUT.

SCHEDULE

ITEM	DESCRIPTION
1	1-1/4" PVC DROP PIPE
2	CUSTOM TAPPED WELL FLANGE
3	1/4" DIAMETER HOSE FROM PACKER TO FILL ASSEMBLY
4	PNEUMATIC WELL PACKER
5	WELL CASING (SEE NOTE 3)
6	1" PVC TUBING (STILLING WELL WITH PRESSURE TRANSDUCER)
7	ANNULAR SPACE, NEAT CEMENT GROUT (SEE NOTE 4)
8	ANNULAR SPACE, TRANSITION SAND (SIZE TBD)
9	ANNULAR SPACE, FILTER PACK (TYPE TBD)
10	WELL SCREEN (316L SS WIRE-WRAP)
11	SPRING CHECK VALVE
12	SUMP
13	3/4" PACKER PRESSURE RELIEF SAFETY VALVE
14	1-1/4" BACKWASH PIPING
15	BACKWASH PUMP

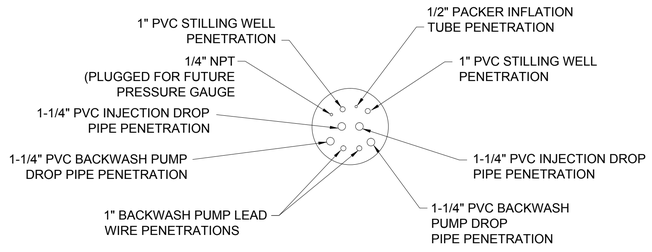

B DUAL SCREEN INJECTION WELL FLANGE DETAIL

NTS

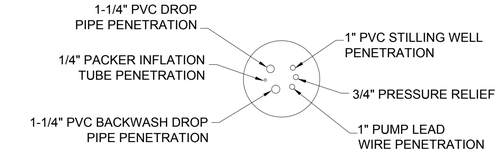

C INJECTION WELL PACKER DETAIL

NTS

- FINAL DESIGN - FOR AGENCY APPROVAL ONLY

REGISTERED PROFESSIONAL ENGINEER BENJAMIN J. WUEFEL C 67811 EXP 6/30/17 STATE OF CALIFORNIA

ETIC ENGINEERING

ARCADIS

N1808

NO.	DATE	DESCRIPTION	GM/SPEC	DWN	CHKD	SUPV	APVD BY
2	11/18/15	FINAL DESIGN		AJW	KLD	BW	RAO
1	09/08/14	PRE-FINAL (90%) DESIGN		BEH	JPB	JPB	JEF
0	04/05/13	INTERMEDIATE (60%) DESIGN		BEH	JPB	JPB	JEF

REVISIONS

APPROVED BY	
RAO	SO
	SUPV
	DSGN
	DWN
	CHKD
	OK
	DATE
	SCALES

TOPOCK GROUNDWATER REMEDIATION PROJECT

TCS LOOP INJECTION WELL CONSTRUCTION DETAILS

GAS TRANSMISSION & DISTRIBUTION
PACIFIC GAS AND ELECTRIC COMPANY
SAN FRANCISCO, CALIFORNIA

MICROFILM	
BILL OF MATL	
DWG LIST	
SUPSDS	
SUPSD BY	
SHEET NO.	of SHEETS
M-03-02	REV 2

11/02/2015, 09:48, G:\Graphics\ARTOPOCK\01\Submittal_100%\DWG\M-Mechanical\M-03-02.dwg, Tab: M-03-02

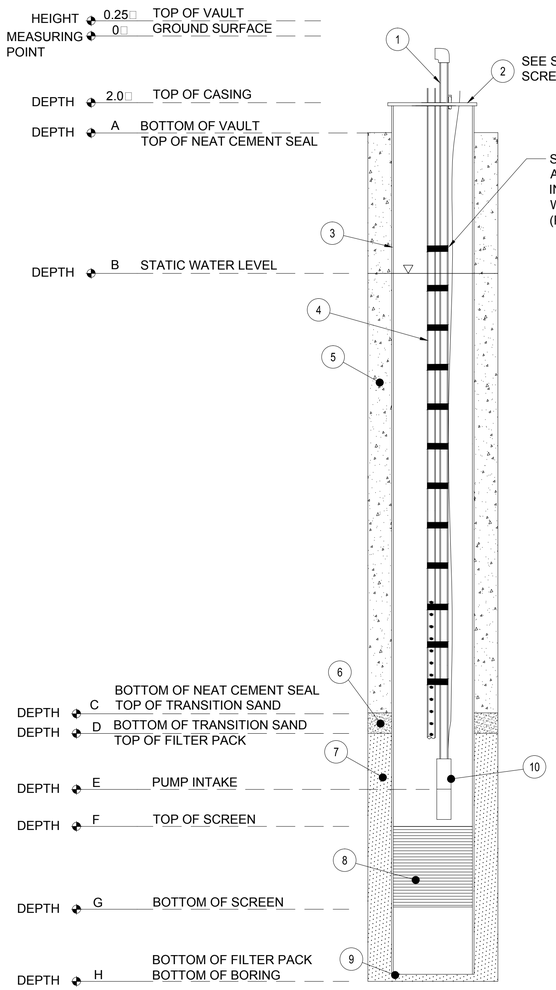

A SINGLE SCREEN EXTRACTION WELL DETAIL
NTS

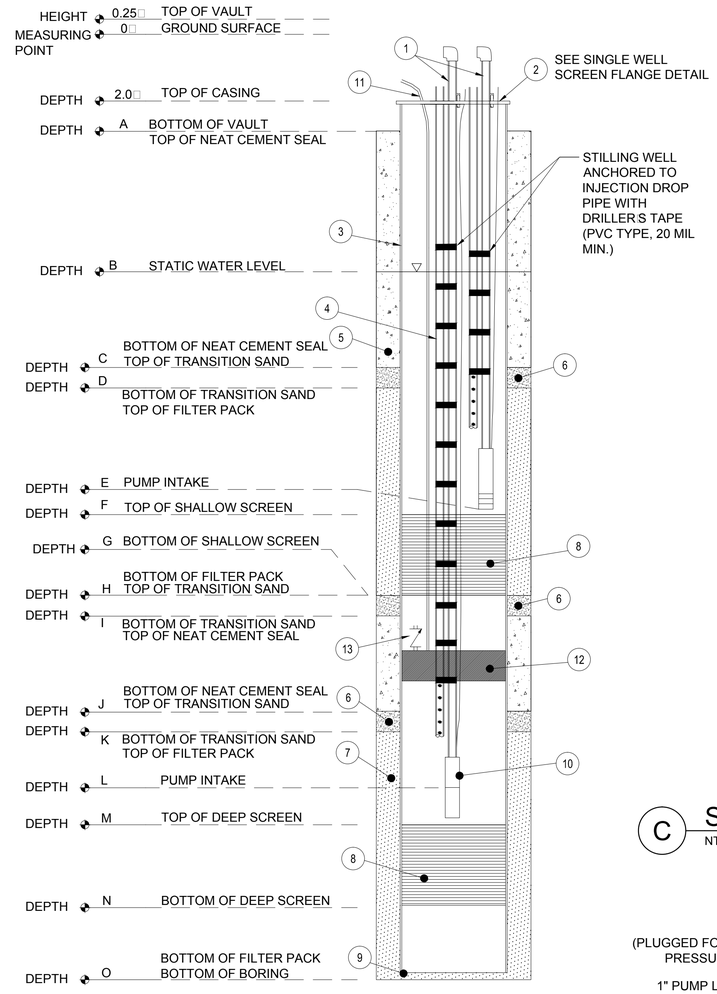

B DUAL SCREEN EXTRACTION WELL DETAIL
NTS

LEGEND:

(1) REFERENCE ITEM NUMBER IN SCHEDULE.

NOTES:
1. ALL DEPTH INTERVALS ARE IN FEET BELOW GROUND SURFACE. SEE WELL CONSTRUCTION SCHEDULE SHEET M-00-06 FOR REPRESENTATIVE DEPTHS.
2. WELL DIAMETER EXAGGERATED TO SHOW DETAIL.
3. WELL CASING 150□ OR SHALLOWER SHALL BE SCH80 PVC. WELL CASINGS DEEPER THAN 150□ SHALL BE 316L SS.
4. ALL WELL SEALS ARE 100% NEAT CEMENT WITH UP TO 6% BENTONITE.
5. ALL ABOVE-GRADE PIPING AND INSTRUMENTATION INSTALLED IN ACCORDANCE WITH THE P□ID AND THE WELLHEAD MECHANICAL LAYOUT.

SCHEDULE

ITEM	DESCRIPTION
1	2" PVC DROP PIPE
2	CUSTOM TAPERED WELL FLANGE
3	WELL CASING (SEE NOTE 3)
4	1" PVC TUBING (STILLING WELL WITH PRESSURE TRANSDUCER)
5	ANNULAR SPACE, NEAT CEMENT GROUT (SEE NOTE 4)
6	ANNULAR SPACE, TRANSITION SAND (SIZE TBD)
7	ANNULAR SPACE, FILTER PACK (SIZE TBD)
8	WELL SCREEN (316L SS, WIRE-WRAP)
9	SUMP
10	GROUNDWATER EXTRACTION PUMP
11	1/4" DIAMETER HOSE FROM PACKER TO FILL ASSEMBLY
12	PNEUMATIC WELL PACKER
13	3/4" PACKER PRESSURE RELIEF SAFETY VALVE

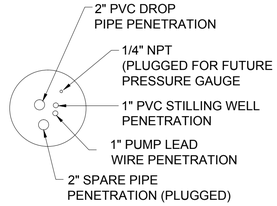

C SINGLE SCREEN WELL FLANGE DETAIL
NTS

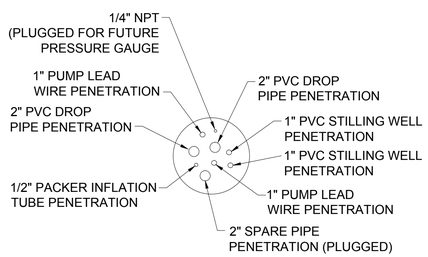

D DUAL SCREEN WELL FLANGE DETAIL
NTS

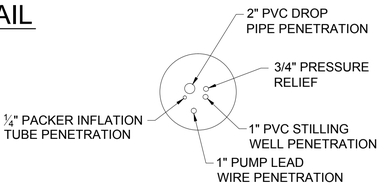

E EXTRACTION WELL PACKER DETAIL
NTS

- FINAL DESIGN - FOR AGENCY APPROVAL ONLY

REGISTERED PROFESSIONAL ENGINEER BENJAMIN J. WUERL C 67811 EXP 6/30/17 STATE OF CALIFORNIA

ETIC ENGINEERING

ARCADIS

NO.	DATE	DESCRIPTION	GM/SPEC	DWN	CHKD	SUPV	APVD BY
2	11/18/15	FINAL DESIGN		AJW	KLD	BW	RAO
1	09/08/14	PRE-FINAL (90%) DESIGN		BEH	JPB	JPB	JEF
0	04/05/13	INTERMEDIATE (60%) DESIGN		BEH	JPB	JPB	JEF

REVISIONS

APPROVED BY RAO

SO
SUPV
DSGN
DWN
CHKD
OK
DATE
SCALES

TOPOCK GROUNDWATER REMEDIATION PROJECT

IRZ EXTRACTION WELL CONSTRUCTION DETAILS

GAS TRANSMISSION & DISTRIBUTION
PACIFIC GAS AND ELECTRIC COMPANY
SAN FRANCISCO, CALIFORNIA

MICROFILM
BILL OF MATL
DWG LIST
SUPSDS
SUPSD BY
SHEET NO. of SHEETS

M-04-01 REV 2

N1808

11/02/2015, 09:53, G:\Graphics\ARIT\TOPOCK-01\Submittal_100%\DWG\eM-Mechanical\M-04-01.dwg, Tab: M-04-01

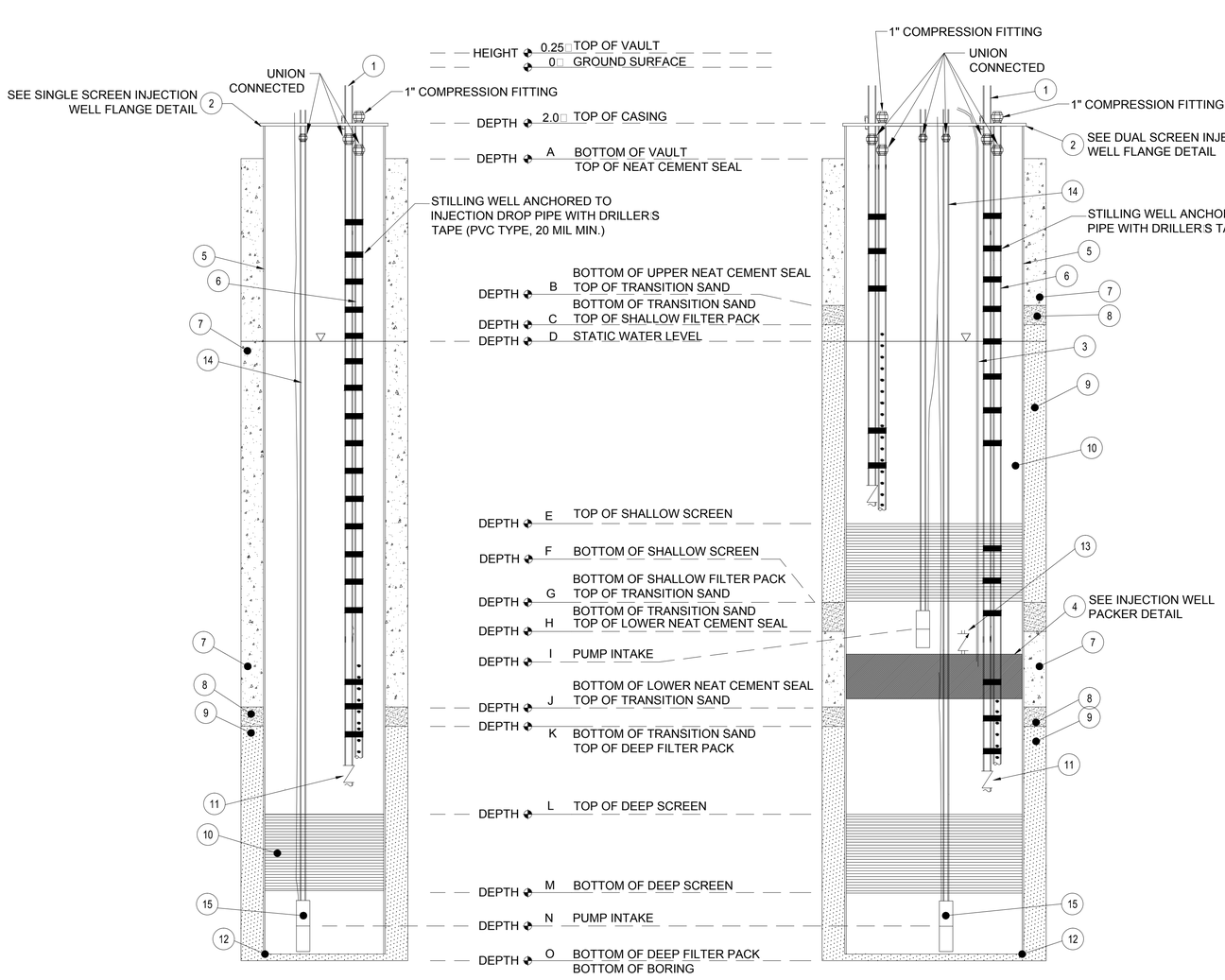

A SINGLE SCREEN INJECTION WELL WITH BACKWASH PUMP DETAIL
NTS

B DUAL SCREEN INJECTION WELL WITH BACKWASH PUMPS DETAIL
NTS

LEGEND:

(1) REFERENCE ITEM NUMBER IN SCHEDULE.

NOTES:
1. ALL DEPTH INTERVALS ARE IN FEET BELOW GROUND SURFACE. SEE WELL CONSTRUCTION SCHEDULE SHEET M-00-06 FOR REPRESENTATIVE DEPTHS.
2. WELL DIAMETER EXAGGERATED TO SHOW DETAIL.
3. WELL CASING 150□OR SHALLOWER SHALL BE SCH80 PVC. WELL CASINGS DEEPER THAN 150□SHALL BE 316L SS.
4. ALL WELL SEALS ARE 100% NEAT CEMENT WITH UP TO 6% BENTONITE.
5. ALL ABOVE-GRADE PIPING AND INSTRUMENTATION INSTALLED IN ACCORDANCE WITH THE P□ID AND THE WELLHEAD MECHANICAL LAYOUT.

SCHEDULE

ITEM	DESCRIPTION
1	1-1/4" PVC DROP PIPE
2	CUSTOM TAPPED WELL FLANGE
3	1/4" DIAMETER HOSE FROM PACKER TO FILL ASSEMBLY
4	PNEUMATIC WELL PACKER
5	WELL CASING (SEE NOTE 3)
6	1" PVC TUBING (STILLING WELL WITH PRESSURE TRANSDUCER)
7	ANNULAR SPACE, NEAT CEMENT GROUT (SEE NOTE 4)
8	ANNULAR SPACE, TRANSITION SAND (SIZE TBD)
9	ANNULAR SPACE, FILTER PACK (TYPE TBD)
10	WELL SCREEN (316L SS, WIRE-WRAP)
11	SPRING CHECK VALVE
12	SUMP
13	3/4" PACKER PRESSURE RELIEF SAFETY VALVE
14	1-1/4" BACKWASH PIPING
15	BACKWASH PUMP

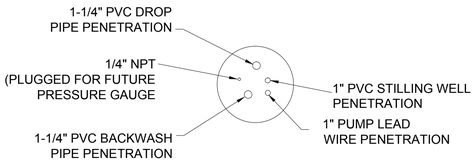

C SINGLE SCREEN WELL FLANGE DETAIL
NTS

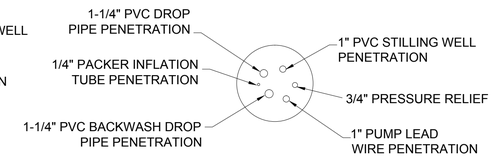

D INJECTION WELL PACKER DETAIL
NTS

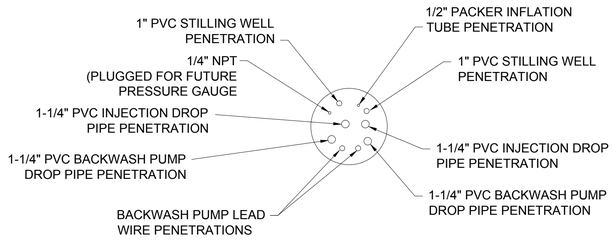

E DUAL SCREEN INJECTION WELL FLANGE DETAIL
NTS

- FINAL DESIGN - FOR AGENCY APPROVAL ONLY

REGISTERED PROFESSIONAL ENGINEER BENJAMIN J. WUEST C 67811 EXP 6/30/17 CIVIL STATE OF CALIFORNIA

ETIC ENGINEERING

ARCADIS

NO.	DATE	DESCRIPTION	GM/SPEC	DWN	CHKD	SUPV	APVD	BY
2	11/18/15	FINAL DESIGN		AJW	KLD	BW	RAO	
1	09/08/14	PRE-FINAL (90%) DESIGN		BEH	JPB	JPB	JEF	
0	04/05/13	INTERMEDIATE (60%) DESIGN		BEH	JPB	JPB	JEF	

REVISIONS

APPROVED BY	SO
	SUPV
RAO	DSGN
	DWN
	CHKD
	OK
	DATE
	SCALES

TOPOCK GROUNDWATER REMEDIATION PROJECT

IRZ INJECTION WELL CONSTRUCTION DETAILS

GAS TRANSMISSION & DISTRIBUTION
PACIFIC GAS AND ELECTRIC COMPANY
SAN FRANCISCO, CALIFORNIA

MICROFILM	
BILL OF MATL	
DWG LIST	
SUPSDS	
SUPSD BY	
SHEET NO.	of SHEETS
M-04-02	REV 2

N1808

11/02/2015, 09:54, G:\Graphics\ARTOPOCK-01\Submittal_100%\DWG\M-Mechanical\M-04-02.dwg, Tab: M-04-02

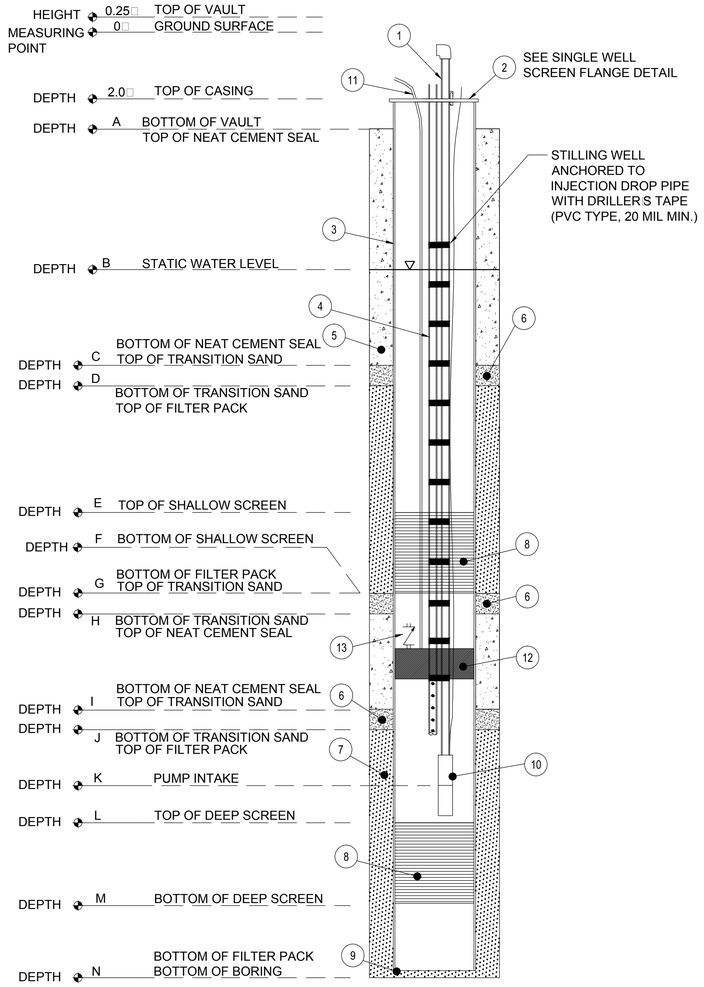

A RIVERBANK DUAL SCREEN EXTRACTION WELL DETAIL
NTS

LEGEND:

(1) REFERENCE ITEM NUMBER IN SCHEDULE.

NOTES:
1. ALL DEPTH INTERVALS ARE IN FEET BELOW GROUND SURFACE. SEE WELL CONSTRUCTION SCHEDULE SHEET M-00-06 FOR REPRESENTATIVE DEPTHS.
2. WELL DIAMETER EXAGGERATED TO SHOW DETAIL.
3. WELL CASING 150□OR SHALLOWER SHALL BE SCH80 PVC. WELL CASINGS DEEPER THAN 150□SHALL BE 316L SS.
4. ALL WELL SEALS ARE 100% NEAT CEMENT WITH UP TO 6% BENTONITE.
5. ALL ABOVE-GRADE PIPING AND INSTRUMENTATION INSTALLED IN ACCORDANCE WITH THE P□ID AND THE WELLHEAD MECHANICAL LAYOUT.

SCHEDULE

ITEM	DESCRIPTION
1	2" PVC DROP PIPE
2	CUSTOM TAPERED WELL FLANGE
3	WELL CASING (SEE NOTE 3)
4	1" PVC TUBING (STILLING WELL WITH PRESSURE TRANSDUCER)
5	ANNULAR SPACE, NEAT CEMENT GROUT (SEE NOTE 4)
6	ANNULAR SPACE, TRANSITION SAND (SIZE TBD)
7	ANNULAR SPACE, FILTER PACK (SIZE TBD)
8	WELL SCREEN (316L SS, WIRE-WRAP)
9	SUMP
10	GROUNDWATER EXTRACTION PUMP
11	1/4" DIAMETER HOSE FROM PACKER TO FILL ASSEMBLY
12	PNEUMATIC WELL PACKER
13	3/4" PACKER PRESSURE RELIEF SAFETY VALVE

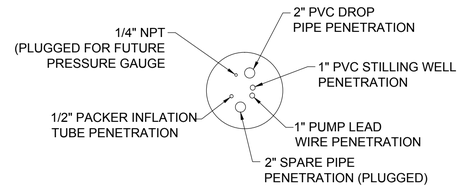

B DUAL SCREEN WELL FLANGE DETAIL
NTS

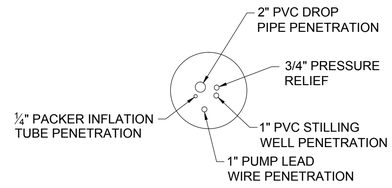

C EXTRACTION WELL PACKER DETAIL
NTS

- FINAL DESIGN - FOR AGENCY APPROVAL ONLY

REGISTERED PROFESSIONAL ENGINEER BENJAMIN J. WUERL C 67811 Exp 6/30/17 STATE OF CALIFORNIA

ETIC ENGINEERING

ARCADIS

NO.	DATE	DESCRIPTION	GM/SPEC	DWN	CHKD	SUPV	APVD	BY
2	11/18/15	FINAL DESIGN		AJW	KLD	BW	RAO	
1	09/08/14	PRE-FINAL (90%) DESIGN		BEH	JPB	JPB	JEF	
0	04/05/13	INTERMEDIATE (60%) DESIGN		BEH	JPB	JPB	JEF	

REVISIONS

APPROVED BY	
RAO	SO
	SUPV
	DSGN
	DWN
	CHKD
	OK
	DATE
	SCALES

TOPOCK GROUNDWATER REMEDIATION PROJECT
INNER RECIRCULATION LOOP EXTRACTION WELL CONSTRUCTION DETAILS
GAS TRANSMISSION & DISTRIBUTION
PACIFIC GAS AND ELECTRIC COMPANY
SAN FRANCISCO, CALIFORNIA

MICROFILM	
BILL OF MATL	
DWG LIST	
SUPSDS	
SUPSD BY	
SHEET NO.	of SHEETS
M-05-01	REV 2

N1808

11/02/2015, 10:14, G:\Graphics\ART\TOPOCX-01\Submittal_100%\DWGs\M\Mechanical\M-05-01.dwg, Tab: M-05-01

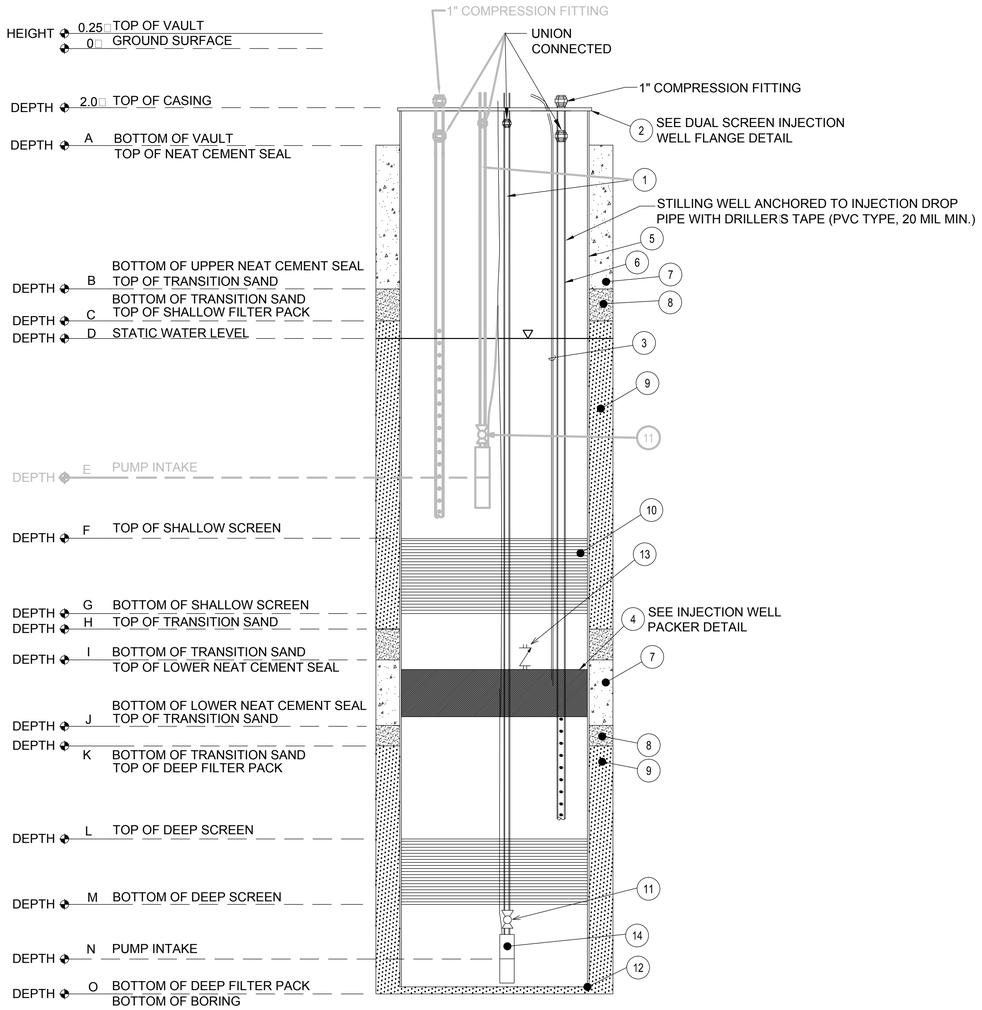

A IRL DUAL SCREEN INJECTION WELL WITH BACKWASH PUMP DETAIL

NTS

LEGEND:

(1) REFERENCE ITEM NUMBER IN SCHEDULE.

NOTES:

1. ALL DEPTH INTERVALS ARE IN FEET BELOW GROUND SURFACE. SEE WELL CONSTRUCTION SCHEDULE SHEET M-00-06 FOR REPRESENTATIVE DEPTHS.
2. WELL DIAMETER EXAGGERATED TO SHOW DETAIL.
3. WELL CASING 150' OR SHALLOWER SHALL BE SCH80 PVC. WELL CASINGS DEEPER THAN 150' SHALL BE 316L SS.
4. ALL WELL SEALS ARE 100% NEAT CEMENT WITH UP TO 6% BENTONITE.
5. ALL ABOVE-GRADE PIPING AND INSTRUMENTATION INSTALLED IN ACCORDANCE WITH THE P&ID AND THE WELLHEAD MECHANICAL LAYOUT.
6. GRAYED-OUT ITEMS REPRESENT CONTINGENT EQUIPMENT AND MAY BE CONSTRUCTED IN THE FUTURE.

SCHEDULE

ITEM	DESCRIPTION
1	4" 316 SS DROP PIPE
2	CUSTOM TAPPED WELL FLANGE
3	1/4" DIAMETER HOSE FROM PACKER TO FILL ASSEMBLY
4	PNEUMATIC WELL PACKER
5	WELL CASING (SEE NOTE 3)
6	1" PVC TUBING (STILLING WELL WITH PRESSURE TRANSDUCER)
7	ANNULAR SPACE, NEAT CEMENT GROUT (SEE NOTE 4)
8	ANNULAR SPACE, TRANSITION SAND (SIZE TBD)
9	ANNULAR SPACE, FILTER PACK (TYPE TBD)
10	WELL SCREEN (316L SS, WIRE-WRAP)
11	ASR VALVE
12	SUMP
13	3/4" PACKER PRESSURE RELIEF SAFETY VALVE
14	BACKWASH PUMP

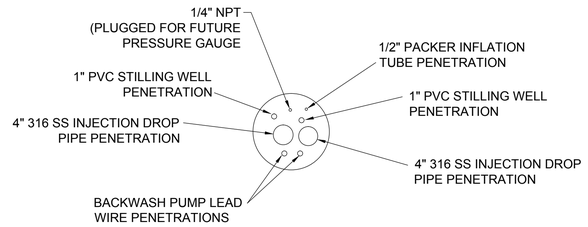

B IRL DUAL SCREEN WELL FLANGE DETAIL

NTS

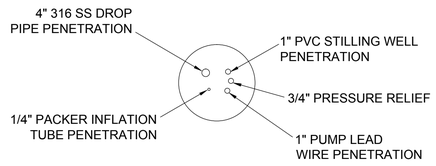

C INJECTION WELL PACKER DETAIL

NTS

- FINAL DESIGN - FOR AGENCY APPROVAL ONLY

REGISTERED PROFESSIONAL ENGINEER BENJAMIN J. WUEST C 67811 EXP 6/30/17 STATE OF CALIFORNIA

NO.	DATE	DESCRIPTION	GM/SPEC	DWN	CHKD	SUPV	APVD BY
2	11/18/15	FINAL DESIGN		AJW	KLD	BW	RAO
1	09/08/14	PRE-FINAL (90%) DESIGN		BEH	JPB	JPB	JEF
0	04/05/13	INTERMEDIATE (60%) DESIGN		BEH	JPB	JPB	JEF

REVISIONS

ETIC ENGINEERING

ARCADIS

N1808

APPROVED BY	
RAO	SO
	SUPV
	DSGN
	DWN
	CHKD
	OK
	DATE
	SCALES

TOPOCK GROUNDWATER REMEDIATION PROJECT

INNER RECIRCULATION LOOP TYPE 1 INJECTION WELL CONSTRUCTION DETAILS

GAS TRANSMISSION & DISTRIBUTION

PACIFIC GAS AND ELECTRIC COMPANY

SAN FRANCISCO, CALIFORNIA

MICROFILM	
BILL OF MATL	
DWG LIST	
SUPSDS	
SUPSD BY	
SHEET NO.	of SHEETS
M-05-02	REV 2

11/02/2015, 10:13, G:\Graphics\ARTOPOCK-01\Submittal_100%\DWGs\M-Mechanical\M-05-02.dwg, Tab: M-05-02

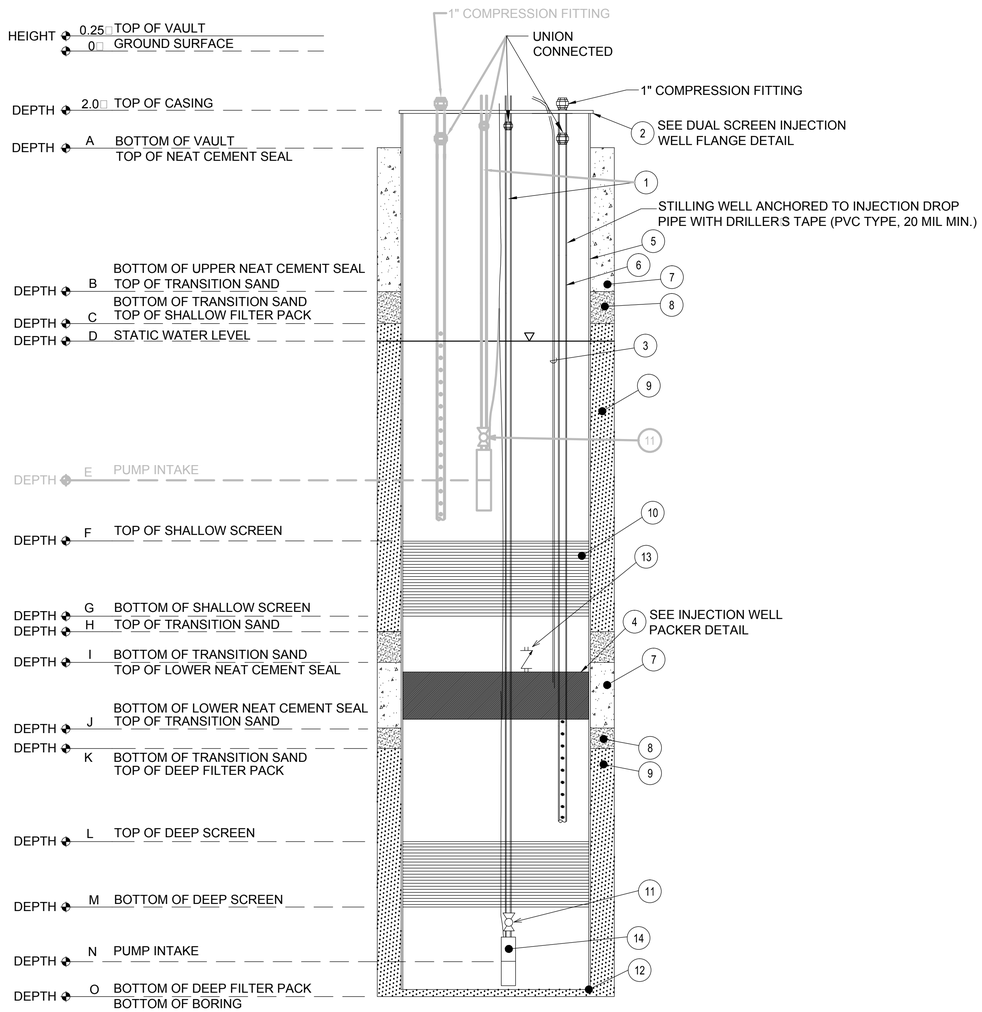

A IRL DUAL SCREEN INJECTION WELL WITH BACKWASH PUMP DETAIL

NTS

LEGEND:

(1) REFERENCE ITEM NUMBER IN SCHEDULE.

NOTES:

1. ALL DEPTH INTERVALS ARE IN FEET BELOW GROUND SURFACE. SEE WELL CONSTRUCTION SCHEDULE SHEET M-00-06 FOR REPRESENTATIVE DEPTHS.
2. WELL DIAMETER EXAGGERATED TO SHOW DETAIL.
3. WELL CASING 150□OR SHALLOWER SHALL BE SCH80 PVC. WELL CASINGS DEEPER THAN 150□SHALL BE 316L SS.
4. ALL WELL SEALS ARE 100% NEAT CEMENT WITH UP TO 6% BENTONITE.
5. ALL ABOVE-GRADE PIPING AND INSTRUMENTATION INSTALLED IN ACCORDANCE WITH THE P□ID AND THE WELLHEAD MECHANICAL LAYOUT.
6. GRAYED-OUT ITEMS REPRESENT CONTINGENT E□UIPMENT AND MAY BE CONSTRUCTED IN THE FUTURE.

SCHEDULE

ITEM	DESCRIPTION
1	4" 316 SS DROP PIPE
2	CUSTOM TAPPED WELL FLANGE
3	1/4" DIAMETER HOSE FROM PACKER TO FILL ASSEMBLY
4	PNEUMATIC WELL PACKER
5	WELL CASING (SEE NOTE 3)
6	1" PVC TUBING (STILLING WELL WITH PRESSURE TRANSDUCER)
7	ANNULAR SPACE, NEAT CEMENT GROUT (SEE NOTE 4)
8	ANNULAR SPACE, TRANSITION SAND (SIZE TBD)
9	ANNULAR SPACE, FILTER PACK (TYPE TBD)
10	WELL SCREEN (316L SS, WIRE-WRAP)
11	ASR VALVE
12	SUMP
13	3/4" PACKER PRESSURE RELIEF SAFETY VALVE
14	BACKWASH PUMP

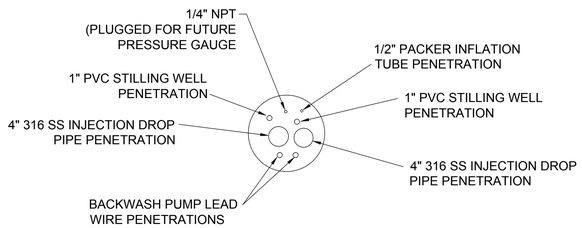

B IRL DUAL SCREEN WELL FLANGE DETAIL

NTS

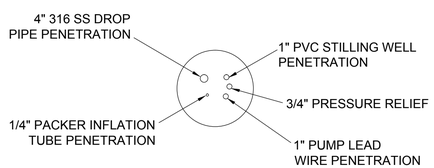

C INJECTION WELL PACKER DETAIL

NTS

- FINAL DESIGN - FOR AGENCY APPROVAL ONLY

REGISTERED PROFESSIONAL ENGINEER BENJAMIN J. WUESTL C 67811 EXP 6/30/17 STATE OF CALIFORNIA

ETIC ENGINEERING

ARCADIS

NO.	DATE	DESCRIPTION	GM/SPEC	DWN	CHKD	SUPV	APVD BY
2	11/18/15	FINAL DESIGN	AJW	KLD	BW	RAO	
1	09/08/14	PRE-FINAL (90%) DESIGN	BEH	JPB	JPB	JEF	
0	04/05/13	INTERMEDIATE (60%) DESIGN	BEH	JPB	JPB	JEF	

REVISIONS

APPROVED BY	
RAO	
SO	
SUPV	
DSGN	
DWN	
CHKD	
OK	
DATE	
SCALES	

TOPOCK GROUNDWATER REMEDIATION PROJECT

INNER RECIRCULATION LOOP TYPE 2 INJECTION WELL CONSTRUCTION DETAILS

GAS TRANSMISSION & DISTRIBUTION

PACIFIC GAS AND ELECTRIC COMPANY
SAN FRANCISCO, CALIFORNIA

MICROFILM	
BILL OF MATL	
DWG LIST	
SUPSDS	
SUPSD BY	
SHEET NO.	of SHEETS
M-05-03	REV 2

N1808

11/02/2015, 10:16, G:\Graphics\ARIT\OPOCK-01\Submittal_100%\DWG\sM\Mechanical\M-05-03.dwg, Tab: M-05-03

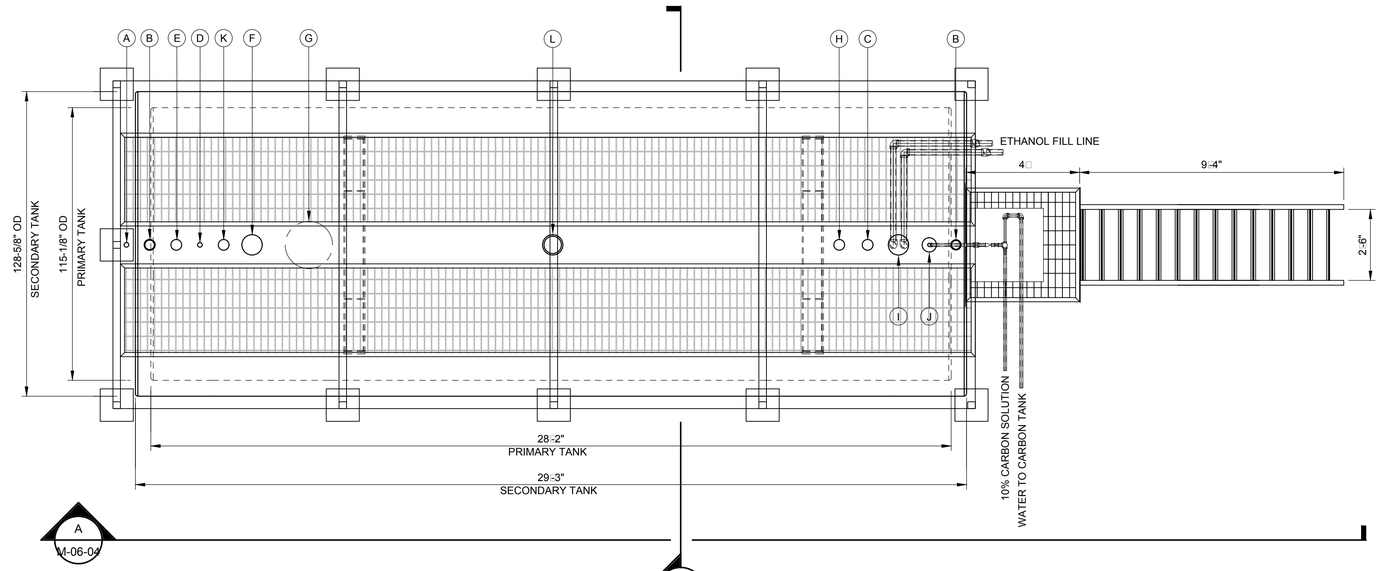

TANK PLAN

3/8" = 1'-0"

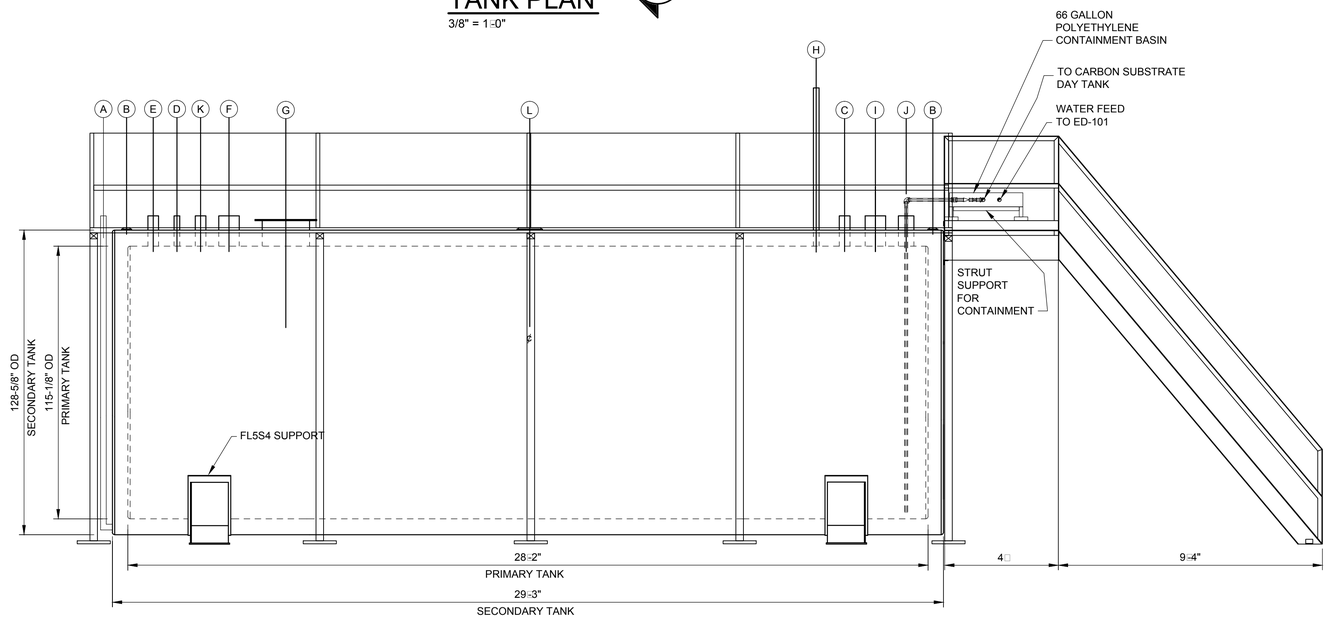

TANK SECTION

A — 3/8" = 1'-0"

M-06-04

LEGEND

(A) REFERENCE NOZZLE SCHEDULE

NOZZLE SCHEDULE						
NOZZLE	SIZE	RATING	SCH	FLANGE		EXISTING NOZZLE DESCRIPTION
				SLIP-ON	F.F.	
A	2"	150□	80	SLIP-ON	F.F.	INTERSTITIAL MONITOR
B	4"	150□	80	SLIP-ON	F.F.	AGGREGATE FILL
C	4"	150□	80	SLIP-ON	F.F.	SPARE
D	2"	150□	80	SLIP-ON	F.F.	TEMPERATURE TRANSMITTER
E	4"	150□	80	SLIP-ON	F.F.	LEVEL TRANSMITTER
F	8"	150□	80	SLIP-ON	F.F.	EMERCENCY VENT
G	20"	150□	80	SLIP-ON		ACCESS PORT
H	2"	150□	80	SLIP-ON	F.F.	PRESSURE/VACUUM (P/V) VENT
I	8"	150□	80	SLIP-ON	F.F.	FILL OPENING
J	6"	150□	80	SLIP-ON	F.F.	SUCTION OPENING
K	4"	150□	80	SLIP-ON	F.F.	SPARE
L	8"	150□	80	SLIP-ON	F.F.	SECONDARY EMERGENCY VENT

NOTES:

1. TANK MUST MEET ALL SEISMIC ZONE IV RE□UIREMENTS.
2. FABRICATOR SHALL PROVIDE CONTRACTOR WITH TANK ANCHORING DETAILS TO CONCRETE SLAB.
3. 3" AND SMALLER NOZZLES SHALL PROJECT 4" (MIN) FROM VESSEL SHELL.
4. 4" NOZZLES AND LARGER SHALL PROJECT 6" (MIN) FROM VESSEL SHELL.
5. FABRICATOR SHALL PROVIDE HANDLES ON ACCESS PORTS.
6. FLANGE BOLT HOLES TO STRADDLE PRINCIPAL VESSEL CENTERLINE UNLESS OTHERWISE INDICATED.
7. FABRICATOR TO PROVIDE REINFORCING PLATES FOR NOZZLES AS RE□UIRED.
8. FABRICATOR TO PROVIDE LIFTING LUGS OR PROVIDE INSTRUCTIONS FOR SETTING TANK (E.G., STRAPS WITH SPREADER BAR).
9. CONTRACTOR TO PROCURE, OFFLOAD, AND INSTALL.
10. FABRICATOR SHALL PROVIDE PLATFORM AND STAIRS TO ACCESS TOP OF TANK.

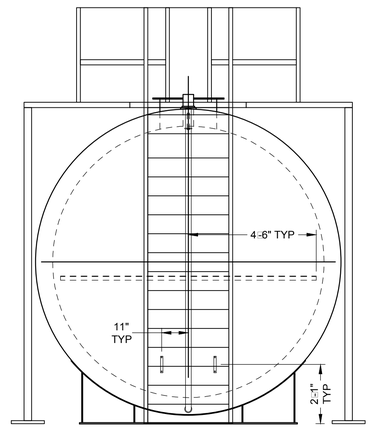

TANK SECTION

B — 3/8" = 1'-0"

M-06-04

- FINAL DESIGN -
FOR AGENCY
APPROVAL ONLY

REGISTERED PROFESSIONAL ENGINEER
BENJAMIN J. WUERL
C 67811
EXP 6/30/17
STATE OF CALIFORNIA

CARBON SUBSTRATE STORAGE TANK PLAN AND SECTION VIEWS

3/8" = 1'-0"

0 1 2 3 4 5 6 7 8

SCALE: 3/8"=1'-0"

ARCADIS

NO.	DATE	DESCRIPTION	GM/SPEC	DWN	CHKD	SUPV	APVD BY
2	11/18/15	FINAL DESIGN	AJW	KLD	BW	RAO	
1	09/08/14	PRE-FINAL (90%) DESIGN	LUK	JPB	JPB	JEF	
0	04/05/13	INTERMEDIATE (60%) DESIGN	LUK	JPB	JPB	JEF	

REVISIONS

APPROVED BY	
RAO	SO
	SUPV
	DSGN
	DWN
	CHKD
	OK
	DATE
	SCALES

TOPOCK GROUNDWATER REMEDIATION PROJECT

IRZ CARBON SUBSTRATE STORAGE TANK MECHANICAL DETAILS

GAS TRANSMISSION & DISTRIBUTION

PACIFIC GAS AND ELECTRIC COMPANY
SAN FRANCISCO, CALIFORNIA

MICROFILM	
BILL OF MATL	
DWG LIST	
SUPSDS	
SUPSD BY	
SHEET NO.	of SHEETS
M-06-04	REV 2

N1808

11/02/2015, 10:31, G:\Graphics\ARITOPOCK-01\Submittal_100%\DWGs\M-Mecha icalM-06-04.dwg, Tab: M-06-04

Appendix B
Standard Operating Procedures

(Provided on CD-ROM Only)

APPENDIX B

Standard Operating Procedures

This appendix contains the following SOPs for the Final Groundwater Remedy at Topock Compressor Station:

- IRZ-SOP-01: MW-20 Bench System Startup
- IRZ-SOP-02: MW-20 Bench System Shutdown/Emergency Shutdown
- IRZ-SOP-03: MW-20 Bench Routine Operation System Inspection
- IRZ-SOP-04: Carbon Amendment Dosing Procedures
- IRZ-SOP-05: MW-20 Bench Carbon Storage Tank Delivery/Filling
- IRZ-SOP-06: MW-20 Bench Sampling Purge Water Transfer
- IRZ-SOP-07: Bench Scale Testing of Clean-in-Place Reagents
- IRZ-SOP-08: Clean-in-Place Reagent Delivery
- IRZ-SOP-09: Clean-in-Place Solution Mixing and Application
- IRZ-SOP-10: Discharge of Clean-in-Place Water to the Remedy-Produced Water Conditioning Plant
- IRZ-SOP-11: Use of Portable Tanks for Individual Well Dosing
- IRZ-SOP-12: Offsite Trucking of Clean-in-Place Water from MW-20 Bench
- Remedy-SOP-03: Cleaning and Maintenance of Instrumentation and Control Equipment
- Remedy-SOP-04: Maintenance of Aboveground Pumps
- Remedy-SOP-05: Cleaning and Maintenance of Valves and Flow Control Equipment
- Remedy-SOP-06: Automatic Backwashing
- Remedy-SOP-07: Secondary Containment Inspection and Maintenance at Buildings
- Remedy-SOP-08: Inspection of Frac Tanks
- PIPE-SOP-01: Conveyance System Inspection and Maintenance
- PIPE-SOP-02: Well and Meter Vault Inspection and Maintenance
- FWS-SOP-01: Startup and Shutdown of Freshwater Supply Conveyance and Storage System
- FWS-SOP-02: Sand Separator and Drywell Operation and Maintenance
- FWS-SOP-03: Freshwater Supply Well Site Inspection
- Well-SOP-01: Well and Borehole Permanent Decommissioning
- Well-SOP-02: Cleaning and Maintenance of Well Pumps
- Well-SOP-03: Physical/chemical well maintenance
- Well-SOP-04: Well Maintenance Chemical Delivery
- Well-SOP-05: Use of Portable Tanks for Well Maintenance/Rehab
- Well-SOP-06: Packer Inspection and Maintenance/Filling Procedures
- Well-SOP-07: Well Rehab Bench Testing
- Well-SOP-08: Remedy Well Inspection
- Well-SOP-09: Inspection and Repair of Groundwater Monitoring Wells
- RTP-SOP-01: System “Hot” Startup and Shutdown
- RTP-SOP-02: Batch Conditioning Process
- RTP-SOP-03: Continuous Conditioning Process
- RTP-SOP-04: CartridgeFfilter Maintenance
- RTP-SOP-05: Secondary Containment Operation in the Remedy-produced Water Conditioning Plant
- RTP-SOP-06: Phase Separator Loading and Removal
- RTP-SOP-07: Manual Cleaning of Frac Tanks
- RTP-SOP-08: Off-site Trucking of Remedy-produced Water
- RTP-SOP-09: Inspection of B-Side Conditioned Water Storage Tank
- RTP-SOP-10: Disposal of Produced Water in Evaporation Ponds via the TCS Wastewater Tank Discharge Connection
- RTP-SOP-11: Water Transfer from Conditioned Water Tank Farm to Tank at MW-20 Bench

- PWR-SOP-01: Transformer Inspection
- PWR-SOP-02: Solar PhotoVoltaic System Maintenance
- PWR-SOP-03: Communication Panel Inspection and Maintenance
- PWR-SOP-04: Remote Well(s) Panel Inspection and Maintenance
- SCADA-SOP-01: HMI/SCADA Application Backup and Cleaning
- SCADA-SOP-02: SCADA Historian Backup and Cleaning
- CHQ-SOP-01: Offsite Hauling of Wastewater
- CHQ-SOP-02: Truck Decontamination
- CHQ-SOP-03: Generator Inspection
- CHQ-SOP-04: Potable Water Delivery
- CHQ-SOP-05: Offsite Hauling of Sewage

Note: References to “SCADA” in the SOPs refer to the Remedy SCADA. References to the “HMI” in the SOPs refer to Remedy OIT or HMI devices.

Standard Operating Procedure
PG&E Topock IRZ
Operation and Maintenance Plan

Title: MW-20 Bench System Startup
Number: IRZ-SOP-01_Rev1
Creation Date: 9/8/2014

1 Background and Scope

Pacific Gas and Electric Company (PG&E) is implementing a groundwater remedy near the intersection of Park Moabi Road and Interstate 40, approximately 12 miles southeast of Needles, California at the PG&E Topock Compressor Station (TCS).

The objective of this Standard Operating Procedure (SOP) is to describe the procedures for startup of the National Trails Highway (NTH) In-Situ Reactive Zone (IRZ), Inner Recirculation Loop (IRL), and Topock Compressor Station (TCS) Recirculation Loop extraction and injection well recirculation systems. The NTH IRZ consists of four extraction wells and up to 24 injection wells, while the IRL consists of five River Bank Extraction Wells and four Inner Recirculation Loop Injection Wells. The TCS Recirculation Loop consists of two Transwestern Bench Extraction Wells, five East Ravine Extraction Wells, and two TCS Injection Wells. Below-grade piping networks allow for the conveyance of extracted groundwater, carbon-amended water, and fresh water between extraction wells, the MW-20 Bench, and injection wells. Ethanol dosing facilities are located at the MW-20 Bench with dosing procedures outlined in IRZ-SOP-04.

2 Drawing Numbers

- I-03-01: TCS Loop East Ravine Extraction Wells P&ID
- I-03-02: TCS Loop Transwestern Bench Extraction Wells P&ID
- I-03-03: TCS Loop Injection Wells P&ID
- I-04-01: IRZ Single Screen NTH IRZ Extraction Wells P&ID
- I-04-02: IRZ Dual Screen NTH IRZ Extraction Wells P&ID
- I-04-03: IRZ Single Screen NTH IRZ Injection Wells P&ID
- I-04-04: IRZ Dual Screen NTH IRZ Injection Wells P&ID
- I-04-05: IRZ Dual Screen Cluster NTH IRZ Injection Wells P&ID Sheet 1 of 2
- I-04-06: IRZ Dual Screen Cluster NTH IRZ Injection Wells P&ID Sheet 2 of 2
- I-05-01: Inner Recirculation Loop Extraction Wells P&ID
- I-05-02: Inner Recirculation Loop Injection Wells Type 1 P&ID
- I-05-03: Inner Recirculation Loop Injection Wells Type 2 P&ID
- I-06-01: MW-20 Bench Carbon Amendment Building P&ID Sheet 1 of 4

- I-06-02: MW-20 Bench Carbon Amendment Building P&ID Sheet 2 of 4
- M-03-01: TCS Loop Extraction Well Construction Details
- M-03-02: TCS Loop Injection Well Construction Details
- M-03-03: TCS Loop Extraction Well Vaults Mechanical Details
- M-03-04: TCS Loop Injection Well Vaults Mechanical Details Sheet 1 of 2
- M-03-05: TCS Loop Injection Well Vaults Mechanical Details Sheet 2 of 2
- M-04-03: IRZ Single Screen Extraction Well Vault Mechanical Details
- M-04-04: IRZ Dual Screen Extraction Well Vault Mechanical Details
- M-04-05: IRZ Single Screen Injection Well Vaults Mechanical Details
- M-04-06: IRZ Dual Screen Injection Well Vaults Mechanical Details
- M-04-07: IRZ Dual Screen Injection Well Vaults Mechanical Sections
- M-04-08: IRZ Dual Screen Cluster Injection Well Vaults Mechanical Details
- M-04-09: IRZ Dual Screen Cluster Injection Well Vaults Mechanical Sections
- M-05-05: Inner Recirculation Loop Injection Well Vault Type 1 Mechanical Details
- M-05-06: Inner Recirculation Loop Injection Well Vault Type 1 Mechanical Sections
- M-05-07: Inner Recirculation Loop Injection Well Vault Type 2 Mechanical Details
- M-05-08: Inner Recirculation Loop Injection Well Vault Type 2 Mechanical Sections

3 Equipment

- Appropriate PPE
- Health and Safety Plan
- Ethanol spill kit
- Fire extinguisher
- Eyewash supplies and safety shower

4 Procedure

1. Prefield Meeting
    1.1 Confirm with Maintenance Supervisor which injection and extraction wells are desired to operate
2. Pre-startup human machine interface (HMI) checks
    2.1 Check system alarm status on HMI
        2.1.1 Select “ALARMS” tab on HMI
        2.1.2 Verify if any alarm condition exist
            1. Document any alarm conditions in the checklist if they exist
    2.2 Call Maintenance Supervisor or Project Engineer if any alarms are active

2.3 Select the “Injection Well” tab on the HMI to view the NTH IRZ, IRL, and TCS Recirculation Loop injection well valve positions

2.3.1 Place desired wells to operate in “AUTO” position (this will not open the valves at this point)

2.4 Select the “Extraction Well” tab on the HMI to view the extraction well valve positions

2.4.1 Place desired wells to operate in “AUTO” position (this will not activate the pumps)

3. System startup

3.1 Select the “SYSTEM” tab on the HMI screen

3.2 Initiate recirculation by pressing “STARTUP”. Injection wells will open first followed by startup of extraction wells

4. Post-startup HMI checks

4.1 Confirm and record proper operating parameters

4.1.1 MW-20 Bench extraction header pressures. Record pressures on tablet

1. PIT-IRZ00-0662
2. PIT-IRZ00-0663

4.1.2 NTH IRZ

1. Extraction well flow rate (FIT-*0470A, FIT-*0471A, FIT-*0471B). Record flow rates on tablet
2. Extraction well water level (LT-*0460B, LT-*0461B, LT-*0461C). Record water levels on tablet
3. Injection well flow rate (FIT-*0472A, FIT-*0473A, FIT-*0473B, FIT-*0474A, FIT-*0474B, FIT-*0475A, FIT-*0475B). Record flow rates on tablet
4. Injection well water levels (LT-*0462E, LT-*0463H, LT-*0463I, LT-*0464H, LT-*0464I, LT-*0465H, LT-*0465I). Record water levels on tablet

4.1.3 IRL

1. Extraction well flow rate (FIT-*0570A). Record flow rates on tablet
2. Extraction well water level (LT-*0560B). Record water levels on tablet
3. Injection well flow rate (FIT-*0571A). Record flow rates on tablet
4. Injection well water levels (LT-*0561F). Record water levels on tablet

4.1.4 TCS Loop

1. Extraction well flow rate (FIT-*0370A and FIT-*0371A) Record flow rates on tablet
2. Extraction well water level (LT-*0360B and LT-*0361B). Record water levels on tablet
3. Injection well flow rate (FIT-*0372A and FIT-*0372B). Record flow rates on tablet
4. Injection well water levels (LT-*0362E and LT-*0362F) . Record water levels on tablet

4.2 Call Project Engineer if any equipment is operating outside of acceptable range (PLC and tablet will provide warnings if a parameter is out of range)

5. Post-startup manual system checks

5.1 Confirm and record proper operating parameters

5.1.1 MW-20 Bench IRZ injection header pressures. Record pressures on tablet

1. PI-IRZ00-0660A
2. PI-IRZ00-0660B
3. PI-IRZ00-0660C
4. PI-IRZ00-0660D

5.2 Check piping for any leaks within the MW-20 Bench carbon amendment building

Standard Operating Procedure
PG&E Topock IRZ
Operation and Maintenance Plan

Title: MW-20 Bench System Shutdown/Emergency Shutdown
Number: IRZ-SOP-02_Rev1

Creation Date: 9/8/2014

1 Background and Scope

Pacific Gas and Electric Company (PG&E) is implementing a groundwater remedy near the intersection of Park Moabi Road and Interstate 40, approximately 12 miles southeast of Needles, California at the PG&E Topock Compressor Station (TCS).

The objective of this Standard Operating Procedure (SOP) is to describe the procedures for normal shutdown along with emergency shutdown of the MW-20 Bench System, which includes the National Trails Highwah (NTH) In-Situ Reactive Zone (IRZ), Inner Recirculation Loop (IRL), and Topock Compressor Station (TCS) Recirculation Loop systems. The NTH IRZ consists of four extraction wells and up to 24 injection wells, while the IRL consists of five River Bank Extraction Wells and four Inner Recirculation Loop Injection Wells. The TCS Recirculation Loop consists of two Transwestern Bench Extraction Wells, five East Ravine Extraction Wells, and two TCS Injection Wells. Ethanol dosing facilities are located at the MW-20 Bench. Below-grade piping networks allow for the conveyance of extracted groundwater, carbon-amended water, and fresh water between extraction wells, the MW-20 Bench, and injection wells. The following SOP provides procedures for shutdown of the system along with subsequence checks to verify system parameters are in safe conditions. In the event of an emergency system shutdown it is important to keep human health and safety as the top priority. The system E-Stop should be engaged and then the environment should be deemed safe prior to continuance of procedures. If an unsafe circumstance remains go to a safe location and contact the project engineer.

2 Drawing Numbers

- I-03-01: TCS Loop East Ravine Extraction Wells P&ID
- I-03-02: TCS Loop Transwestern Bench Extraction Wells P&ID
- I-03-03: TCS Loop Injection Wells P&ID
- I-04-01: IRZ Single Screen Extraction Wells P&ID
- I-04-02: IRZ Dual Screen Extraction Wells P&ID
- I-04-03: IRZ Single Screen Injection Wells P&ID
- I-04-04: IRZ Dual Screen Injection Wells P&ID
- I-04-05: IRZ Dual Screen Cluster Injection Wells P&ID Sheet 1 of 2
- I-04-06: IRZ Dual Screen Cluster Injection Wells P&ID Sheet 2 of 2
- I-05-01: Inner Recirculation Loop Extraction Wells P&ID

- I-05-02: Inner Recirculation Loop Injection Wells Type 1 P&ID
- I-05-03: Inner Recirculation Loop Injection Wells Type 2 P&ID
- I-06-01: MW-20 Bench Carbon Amendment Building P&ID Sheet 1 of 4
- I-06-02: MW-20 Bench Carbon Amendment Building P&ID Sheet 2 of 4
- I-06-03: MW-20 Bench Carbon Amendment Building P&ID Sheet 3 of 4
- I-06-04: MW-20 Bench Carbon Amendment Building P&ID Sheet 4 of 4
- M-03-01: TCS Loop Extraction Well Construction Details
- M-03-02: TCS Loop Injection Well Construction Details
- M-03-03: TCS Loop Extraction Well Vaults Mechanical Details
- M-03-04: TCS Loop Injection Well Vaults Mechanical Details Sheet 1 of 2
- M-03-05: TCS Loop Injection Well Vaults Mechanical Details Sheet 2 of 2
- M-04-05: IRZ Single Screen Injection Well Vaults Mechanical Details
- M-04-06: IRZ Dual Screen Injection Well Vaults Mechanical Details
- M-04-07: IRZ Dual Screen Injection Well Vaults Mechanical Sections
- M-04-08: IRZ Dual Screen Cluster Injection Well Vaults Mechanical Details
- M-04-09: IRZ Dual Screen Cluster Injection Well Vaults Mechanical Sections
- M-05-05: Inner Recirculation Loop Injection Well Vault Type 1 Mechanical Details
- M-05-06: Inner Recirculation Loop Injection Well Vault Type 1 Mechanical Sections
- M-05-07: Inner Recirculation Loop Injection Well Vault Type 2 Mechanical Details
- M-05-08: Inner Recirculation Loop Injection Well Vault Type 2 Mechanical Sections

3 Equipment

- Appropriate PPE
- Health and Safety Plan
- Ethanol spill kit
- Fire extinguisher
- Eyewash supplies and safety shower

4 Procedure

Routine Shutdown Procedures

1. Pre-shutdown human machine interface (HMI) checks
    1.1 Check system alarm status on HMI
        1.1.1 Select “ALARMS” tab on HMI
        1.1.2 Verify if any alarm conditions exist

1. Document any alarm conditions in the checklist
2. Troubleshoot any alarms
3. Call Maintenance Supervisor or Project Engineer if alarms cannot be readily addressed

2. System shutdown

2.1 Scroll to the “SYSTEM” tab on the HMI

2.2 Initiate shutdown by pressing “SYSTEM SHUTDOWN”

2.3 Verify that operating equipment on the HMI process flow diagram graphic visually turns from green (operating) to red (inactive)

2.3.1 Red (inactive) equipment to note

1. Pump PMP-IRZ00-0640
2. Pump PMP-IRZ00-0641
3. Pump PMP-IRZ00-0642
4. FV-IRZ00-0611 (located downstream of Tank T-IRZ00-0601) should be closed
5. FCV-IRZ00-0612 (located downstream of Pump PMP-IRZ00-0640) should be closed
6. FCV-IRZ00-0613 (located downstream of Pump PMP-IRZ00-0641) should be closed
7. FCV-IRZ00-0614 (located downstream of Pump PMP-IRZ00-0642) should be closed
8. FCV-IRZ00-0615 (located on ethanol conveyance line upstream of tee with IRL Injection Header) should be closed
9. FCV-IRZ00-0616 (located on ethanol conveyance line upstream of tee with North NTH IRZ Injection Header) should be closed
10. FCV-IRZ00-0617 (located on ethanol conveyance line upstream of tee with South NTH IRZ Injection Header) should be closed
11. FCV-IRZ00-0618 (located on ethanol conveyance line upstream of tee with TCS Injection Header) should be closed
12. FV-*0307, FV-*0308, FCV-*0404, FCV-*0408, FCV-*0409, FCV-*0414, FCV-*0415, FCV-*0416, FCV-*0417, FV-*0507, and FCV-*0510 (located in NTH IRZ, IRL, and TCS injection meter vaults) should be closed
13. FCV-*0509 (located on IRL injection well ASR Pump Package backwash lines) should be closed

3. Post-shutdown human machine interface (HMI) checks

3.1 Check system flow rates

3.1.1 NTH IRZ

1. Extraction well flow rate (FIT-*0470A, FIT-*0471A, FIT-*0471B): 0 gallons per minute (gpm) per well

2. Injection well flow rate (FIT-*0472A, FIT-*0473A, FIT-*0473B, FIT-*0474A, FIT-*0474B, FIT-*0475A, FIT-*0475B): 0 gpm per well

3.1.2 IRL

1. Extraction well flow rate (FIT-*0570A): 0 gpm per well
2. Injection well flow rate (FIT-*0571A): 0 gpm per well

3.1.3 TCS Loop

1. Extraction well flow rate (FIT-*0370A and FIT-*0371A): 0 gpm per well
2. Injection well flow rate (FIT-*0372A and FIT-*0372B): 0 gpm per well

3.1.4 Carbon Amendment Building (* indicates IRZ00)

1. Carbon substrate hose pump PMP-*0640 flow rate (FIT-*0671): 0 gpm
2. Carbon substrate hose pump PMP-*0641 flow rate (FIT-*0675): 0 gpm
3. Carbon substrate hose pump PMP-*0642 flow rate (FIT-*0676 and FIT-*0681): 0 gpm
4. River bank extraction well header flow rate (FIT-*0672): 0 gpm
5. IRZ-23 well and Northern NTH IRZ extraction network header well flow rate (FIT-*0673 and FIT-*0674): 0 gpm
6. TCS extraction well network header flow rate (FIT-*0680): 0 gpm

3.2 Call Maintenance Supervisor or Project Engineer if any detectable flow rate is still observed following shutdown

4. Post-shutdown manual system checks

4.1 Record system pressures – Verify MW-20 Bench System pressures are 0 pounds per square inch (psi). Notify project engineer if system pressures above 5 psi remain in section of the piping

4.1.1 Injection header pressure (* indicates IRZ00)

1. PI-*0660A
2. PI-*0660B
3. PI-*0660C
4. PI-*0660D

4.1.2 Extraction header pressure (* indicates IRZ00)

1. PIT-*0662
2. PIT-*0663

4.2 Check piping for any leaks

Emergency System Shutdown

Note: Human health and safety is the first priority in any emergency situation.

1. System shutdown

1.1 Hit the E-Stop Button

1.1.1 Locations

1. Exterior of the IRZ Carbon Amendment Building
2. On the control panel in the electrical and control room of the IRZ Carbon Amendment Building

1.2 Determine if the emergency condition has been mitigated

1.2.1 If yes proceed to Step 2

1.2.2 If no, locate yourself to a safe area and call the Maintenance Supervisor or Project Engineer

2. System shutdown verification

2.1 Verify that operating equipment on the HMI process flow diagram graphic visually turned from green (operating) to red (inactive)

2.1.1 Pump PMP-IRZ00-0640

2.1.2 Pump PMP-IRZ00-0641

2.1.3 Pump PMP-IRZ00-0642

2.1.4 FV-IRZ00-0611 (located downstream of Tank TNK-IRZ00-0601) should be closed

2.1.5 FCV-IRZ00-0612 (located downstream of Pump PMP-IRZ00-0640) should be closed

2.1.6 FCV-IRZ00-0613 (located downstream of Pump PMP-IRZ00-0641) should be closed

2.1.7 FCV-IRZ00-0614 (located downstream of Pump PMP-IRZ00-0642) should be closed

2.1.8 FCV-IRZ00-0615 (located on ethanol conveyance line upstream of tee with IRL Injection Header) should be closed

2.1.9 FCV-IRZ00-0616 (located on ethanol conveyance line upstream of tee with North NTH IRZ Injection Header) should be closed

2.1.10 FCV-IRZ00-0617 (located on ethanol conveyance line upstream of tee with South NTH IRZ Injection Header Leg IRZ 24-40) should be closed

2.1.11 FCV-IRZ00-0618 (located on ethanol conveyance line upstream of tee with TCS Loop Injection Header) should be closed

2.1.12 FV-*0307, FV-*0308, FCV-*0404, FCV-*0408, FCV-*0409, FCV-*0414, FCV-*0415, FCV-*0416, FCV-*0417, FV-*0507, and FCV-*0510 (located in NTH IRZ, IRL, and TCS injection meter vaults) should be closed

2.1.13 FCV-*0509 (located on IRL injection well ASR Pump Package backwash lines) should be closed

3. Post-shutdown human machine interface (HMI) checks

3.1 System flow rates

3.1.1 NTH IRZ

1. Extraction well flow rate (FIT-*0470A, FIT-*0471A, FIT-*0471B): 0 gpm per well
2. Injection well flow rate (FIT-*0472A, FIT-*0473A, FIT-*0473B, FIT-*0474A, FIT-*0474B, FIT-*0475A, FIT-*0475B): 0 gpm per well

3.1.2 IRL

1. Extraction well flow rate (FIT-*0570A): 0 gpm per well

2. Injection well flow rate (FIT-*0571A): 0 gpm per well

3.1.3 TCS Loop

1. Extraction well flow rate (FIT-*0370A and FIT-*0371A): 0 gpm per well
2. Injection well flow rate (FIT-*0372A and FIT-*0372B): 0 gpm per well

3.1.4 Carbon Amendment Building (* indicates IRZ00)

1. Carbon substrate hose pump PMP-*0640 flow rate (FIT-*0671): 0 gpm
2. Carbon substrate hose pump PMP-*0641 flow rate (FIT-*0675): 0 gpm
3. Carbon substrate hose pump PMP-*0642 flow rate (FIT-*0676 and FIT-*0681): 0 gpm
4. River bank extraction well header flow rate (FIT-*0672): 0 gpm
5. IRZ-23 well and Northern NTH IRZ extraction network header well flow rate (FIT-*0673 and FIT-*0674): 0 gpm
6. TCS extraction well network header flow rate (FIT-*0680): 0 gpm

3.1.5 Call Maintenance Supervisor or Project Engineer if any detectable flow rate is still observed following shutdown

4. Post-shutdown manual system checks

4.1 Record system pressures – Verify MW-20 Bench System pressures are 0 psi. Notify project engineer if system pressures above 5 psi remain in section of the piping

4.1.1 Injection header pressure (* indicates IRZ00)

1. PI-*0660A
2. PI-*0660B
3. PI-*0660C
4. PI-*0660D

4.1.2 Extraction header pressure

1. PIT-*0662
2. PIT-*0663

4.2 Check piping for any leaks

Standard Operating Procedure
PG&E Topock IRZ
Operation and Maintenance Plan

Title: MW-20 Bench Routine Operation System Inspection
Number: IRZ-SOP-03_Rev1

Creation Date: 9/8/2014

1 Background and Scope

Pacific Gas and Electric Company (PG&E) is implementing a groundwater remedy near the intersection of Park Moabi Road and Interstate 40, approximately 12 miles southeast of Needles, California at the PG&E Topock Compressor Station.

The objective of this Standard Operating Procedure (SOP) is to describe the procedure for routine maintenance inspection of the carbon amendment, well maintenance, and Clean-in-Place (CIP) systems located at the MW-20 Bench. Principal system components include storage tanks, pumps, and piping. Routine system inspections include recording the operating conditions of process equipment, physical inspection of active system components, and physical inspection of the secondary containment areas.

2 Drawing Numbers

- I-06-01: MW-20 Bench Carbon Amendment Building P&ID Sheet 1 of 4
- I-06-02: MW-20 Bench Carbon Amendment Building P&ID Sheet 2 of 4
- I-06-03: MW-20 Bench Carbon Amendment Building P&ID Sheet 3 of 4
- I-06-04: MW-20 Bench Carbon Amendment Building P&ID Sheet 4 of 4
- M-06-01: MW-20 Bench Carbon Amendment Building Mechanical Layout
- M-06-04: MW-20 Bench Carbon Substrate Storage Tank Mechanical Details and Sections

3 Equipment

- Appropriate PPE
- Health and Safety Plan
- Manual level gauge staff
- Electronic data handheld instrument
- Materials for cleaning pressure/vacuum (P/V) vent screens per manufacturer's recommendations
- Possible equipment needed to remove standing water includes but is not limited to:

- Mop
- Shop-vac
- Spill containment
- Extension cord

4 Procedure

1. MW-20 Bench Inspection (* indicates IRZ00)

1.1 Mobilize to MW-20 Bench

1.2 Check that security fence is secure and gates are locked

1.3 Check operating conditions of MW-20 Bench carbon amendment system process equipment on human machine interface (HMI)

1. Record Carbon Substrate Tank T-*0601 level from LT-*0652
2. Record flow meter readings for forcemains prior to carbon substrate injection:
    a. FIT-*0672 for Inner Recirculation Loop (IRL) forcemain
    b. FIT-*0673 for North In Situ Reactive Zone (IRZ) forcemain
    c. FIT-*0674 for South IRZ forcemain
    d. FIT-*0680 for TCS Injection forcemain
3. Record flow meter readings for carbon substrate injection lines:
    a. FIT-*0671 prior to IRL forcemain
    b. FIT-*0675 prior to North IRZ forcemain
    c. FIT-*0676 prior to South IRZ forcemain
    d. FIT-*0681 prior to TCS Injection forcemain
4. Record pressure readings at:
    a. PIT-*0662 for River Bank Extraction Well Network Header
    b. PIT-*0663 for IRZ-23 Extraction Well Header and Northern NTH IRZ Extraction Well Network Header

1.4 Check operating conditions of MW-20 Bench well maintenance reagent delivery system process equipment on HMI

1. Record IRZ Well Maintenance Reagent Day Tank T-*0619 level from LT-*0659
2. Record flow meter reading at FIT-*0679 for well maintenance reagent injection line
3. Record pressure reading at PIT-*0661 for well maintenance reagent injection line

1.5 Check operating conditions of well maintenance/CIP system process equipment on HMI

1. Record tank levels
    a. Record CIP Frac Tank T-*0623 level from LT-*0658

b. Record Backwash Frac Tank level from LT-*0657

c. Record Conditioned Water Frac Tank level from LT-*0656

2. Record flow meter reading

a. FIT-*0680A for CIP system

1.6 Check for leak detection alarms on HMI

1. If an alarm condition is observed:

a. Verify the location of the leak if it is safe and feasible to do so

b. Take measures to address the leak per Remedy-SOP-07

1.7 If carbon amendment system is active:

1. Complete physical inspection of Carbon Substrate Tank T-*0601

a. Visually inspect tank for signs of damage, leaks, or excessive deformation of tank walls

b. Visually inspect associated piping for leaks or damage

c. Visually inspect filling piping and fittings for leaks or damage

2. Check that stairs and platform to access top of tank are in good condition with no signs of wear or damage

3. Inspect P/V vent screens for fouling

a. Access screens from catwalk platform

b. Clean screen(s) in accordance with manufacturer's recommendations if fouling is observed

c. Replace screen(s) in accordance with manufacturer's recommendations if cleaning is ineffective

4. Complete physical inspection of Carbon Substrate Pumps PMP-*0640, PMP-*0641, and PMP-*0642

a. Visually inspect pumps for leaks or damage

b. Check that lubricant sight glasses are at least half full

c. Complete pump maintenance activities, if necessary, in accordance with Remedy-SOP-04

1.8 If well maintenance reagent delivery system is active:

1. Complete physical inspection Well Maintenance Reagent Day Tank T-*0619

a. Visually inspect tank for signs of damage, leaks, or excessive deformation of tank walls

b. Visually inspect associated piping for leaks or damage

c. Visually inspect filling piping and fittings for leaks or damage

2. Complete physical inspection of Well Maintenance Reagent Pump PMP-*0643

a. Visually inspect pump for leaks or damage

b. Check that lubricant sight glass is at least half full

c. Complete pump maintenance activities, if necessary, in accordance with Remedy-SOP-04

1.9 If well maintenance/CIP system is active:

1. Complete physical inspection of well maintenance/CIP system Tanks T-*0620, T-*0621, and T-*0623

    a. Visually inspect tank for signs of damage, leaks, or excessive deformation of tank walls

    b. Visual inspect associated piping for leaks or damage

2. Complete physical inspection of CIP reagent, produced water transfer, and conditioned water injection pumps PMP-*0644, PMP-*0645, and PMP-*0648

    a. Visually inspect pump for leaks or damage

    b. Check that lubricant sight glass is at least half full

    c. Complete pump maintenance activities, if necessary, in accordance with Remedy-SOP-04

1.10 IRZ Carbon Amendment Building piping physical inspection

1. Visually inspect piping for leaks, damage, or signs of wear
2. Pay close attention to valves, joints and connections

1.11 Pressure reading checks

1. Record pressure at pressure gauges:

    a. PI-*0660A located downstream of in-line static mixer M-*0605

    b. PI-*0660B located downstream of in-line static mixer M-*0606

    c. PI-*0660C located downstream of in-line static mixer M-*0607

    d. PI-*0660D located downstream of in-line static mixer M-*0608

    e. PI-*0660F located downstream of CIP Reagent Pump PMP-*0644

    f. PI-*0660G located downstream of Produced Water Transfer Pump PMP-*0645

    g. PI-*0660 located downgradient of Conditioned Water Injection Pump PMP-*0648

1.12 Secondary containment and sump physical inspection

1. Inspect containment pads/concrete for cracks and other signs of wear

    a. Perform inspection in accordance with Remedy-SOP-7

2. Check for standing water
3. If standing water is present:

a. Remove the water using the appropriate equipment (mop, shop-vac, etc.)
b. Attempt to determine the source of the water if it is safe and feasible to do so

4. Dispose of any observed debris in the appropriate receptacle

Standard Operating Procedure
PG&E Topock IRZ
Operation and Maintenance Plan

Title: Carbon Amendment Dosing Procedures

Number: IRZ-SOP-04_Rev1

Creation Date: 9/8/2014

1 Background and Scope

Pacific Gas and Electric Company (PG&E) is implementing a groundwater remedy near the intersection of Park Moabi Road and Interstate 40, approximately 12 miles southeast of Needles, California at the PG&E Topock Compressor Station (TCS).

The objective of this Standard Operating Procedure (SOP) is to describe the procedure for automated dosing of ethanol (as the carbon amendment) into the groundwater recirculation conveyance lines using the human machine interface (HMI) on the control panel within the MW-20 Bench carbon amendment buildings. Components of the carbon amendment system located at the MW-20 Bench include the carbon substrate storage tank; carbon amendment, metering, and control equipment (including valves, flow meters, carbon substrate hose pumps, and ancillary equipment); and monitoring equipment for the extraction well header network. Between ethanol injection cycles, groundwater is continuously recirculated from the extraction wells to the groundwater recirculation lines within the MW-20 Bench building, and then to the injection wells via the forcemain lines.

2 Drawing Numbers

- I-06-01: MW-20 Bench Carbon Amendment Building P&ID Sheet 1 of 4
- I-06-02: MW-20 Bench Carbon Amendment Building P&ID Sheet 2 of 4
- I-06-03: MW-20 Bench Carbon Amendment Building P&ID Sheet 3 of 4
- I-06-04: MW-20 Bench Carbon Amendment Building P&ID Sheet 4 of 4

3 Equipment

- Appropriate personal protective equipment (PPE)
- Health and Safety Plan
- Electronic data handheld instrument
- Ethanol spill kit
- 5-gallon bucket with lid or other appropriate receptacle

4 Procedure

1. Dosing Event Specifications Check
   - 1.1 Confirm target ethanol dosing concentration with Maintenance Supervisor
   - 1.2 Confirm dosing duration with Maintenance Supervisor
   - 1.3 Confirm dosing point(s): IRL, North NTH IRZ, South NTH IRZ, and/or TCS Loop
2. Pre-dosing HMI checks
   - 2.1 Check system alarm status on HMI
     1. Scroll to the "ALARMS" tab on HMI
     2. Verify if any alarm condition exist
        a. Document any alarm conditions in the checklist if they exist
        b. Troubleshoot any alarms that are active
   - 2.2 Call the Maintenance Supervisor or Project Engineer or if any alarms cannot be readily addressed
   - 2.3 Check tank level at LT-IRZ00-0652 for Carbon Substrate Tank T-IRZ00-0601
     1. If tank level is at less than 25%, notify Maintenance Supervisor so substrate delivery can be scheduled
3. Initiation of Ethanol Dosing Event at HMI (* indicates IRZ00)
   - 3.1 Select the "CARBON DOSING" tab on the HMI and verify the following equipment is in "AUTO"
     1. Solenoid valve FV-*0611 (downstream of Carbon Substrate Tank T-*0601)
     2. Carbon Substrate Pumps PMP-*0640, PMP-*0641, and PMP-*0642
     3. Motorized valves FCV-*0612, FCV-*0613, and FCV-*0614 (downstream of the carbon substrate pumps)
     4. Motorized valves FCV-*0615, FCV-*0616, FCV-*0617, and FCV-*0618 (to the injection points)
   - 3.2 Verify flow rate from extraction wells (record values in tablet)
     1. Record flow rate at FIT-*0672 if dosing into the IRL
     2. Record flow rate at FIT-*0673 if dosing into the North NTH IRZ
     3. Record flow rate at FIT-*0674 if dosing into the South NTH IRZ
     4. Record flow rate at FIT-*0680 if dosing into the TCS Loop
   - 3.3 Input target dosing concentration into HMI
     1. Select "ETHANOL CONCENTRATION" within the "CARBON DOSING" tab
     2. Use 0-9 digit touch pad to enter target dosing concentration in mg/L
        a. A single carbon dosing concentration will be applied to all recirculation loops

b. Maximum allowable carbon dosing concentration in programming is 4.15 g/L TOC (1% by volume ethanol)

3.4 On the "CARBON DOSING" tab on the HMI select "AUTOMATE DOSING" to activate the process.

3.5 Confirm proper actuation of valves – alarm will trigger and carbon substrate hose pumps will not turn on if valves do not actuate properly

1. Ensure that FV-*0611 is open
2. Ensure that FCV-*0612 is open if PMP-*0640 is active
3. Ensure that FCV-*0613 is open if PMP-*0641 is active
4. Ensure that FCV-*0614 is open if PMP-*0642 is active
5. Ensure that FCV-*0615 is open if dosing into the IRL (FCV-*0616, FCV-*0617, and FCV-*0618 closed)
6. Ensure that FCV-*0616 is open if dosing into the North NTH IRZ (FCV-*0615, FCV-*0617, and FCV-*0618 closed)
7. Ensure that FCV-*0617 is open if dosing into the South NTH IRZ (FCV-*0615, FCV-*0616, and FCV-*0618 closed)
8. Ensure that FCV-*0618 is open if dosing into the TCS Loop (FCV-*0615, FCV-*0616, and FCV-*0617 closed)

3.6 Confirm proper operation of Carbon Substrate Pumps PMP-*0640, PMP-*0641, and PMP-*0642

1. Short time delay programmed between valve activation and pump startup
2. Pump status changes from "Auto, Off" to "Auto, On"
3. Pump speeds to steady after 1-2 minutes of operation

4. Termination of Ethanol Dosing Event (* indicates IRZ00)

4.1 Ethanol dosing event to be manually terminated at HMI

1. On the "CARBON DOSING" tab on the HMI select "STOP DOSING" to stop the process.

4.2 Confirm Carbon Substrate Pumps PMP-*0640, PMP-*0641, and PMP-*0642 turn off

1. Pump status changes from "Auto, On" to "Auto, Off"

4.3 Confirm proper valve actuation

1. Short time delay programmed between pump shut down and valve activation
2. Ensure that FV-*0611 closes
3. Ensure that FCV-*0612, FCV-*0613, and FCV-*0614 (located downstream of carbon substrate hose pumps) close
4. Ensure that FCV-*0615, FCV-*0616, FCV-*0617, and FCV-*0618 (located just upstream of ethanol-water mixing point) close

Standard Operating Procedure
PG&E Topock IRZ
Operation and Maintenance Plan

Title: MW-20 Bench Carbon Storage Tank Delivery/Filling
Number: IRZ-SOP-05_Rev1

Creation Date: 9/8/2014

1 Background and Scope

Pacific Gas and Electric Company (PG&E) is implementing a groundwater remedy near the intersection of Park Moabi Road and Interstate 40, approximately 12 miles southeast of Needles, California at the PG&E Topock Compressor Station (TCS).

The objective of this Standard Operating Procedure (SOP) is to describe the procedure for ethanol delivery and filling at IRZ Carbon Substrate Tank T-IRZ00-0601, located adjacent to the MW-20 Bench Carbon Amendment Building. Tank T-IRZ00-0601 is a 15,000-gallon, above-grade, horizontal saddle tank that is fully compatible with ethanol. T-IRZ00-0601 has double-wall construction and an integral interstitial zone to provide secondary containment. T-IRZ00-0601 also includes a primary pressure/vacuum vent, emergency vents to prevent damage from failure of the primary vent, and a vapor recovery system designed to capture any emissions generated during the storage tank filling process.

2 Drawing Numbers

- I-06-01: MW-20 Bench Carbon Amendment Building P&ID Sheet 1 of 4
- I-06-02: MW-20 Bench Carbon Amendment Building P&ID Sheet 2 of 4
- I-06-03: MW-20 Bench Carbon Amendment Building P&ID Sheet 3 of 4
- I-06-04: MW-20 Bench Carbon Amendment Building P&ID Sheet 4 of 4
- M-06-04: MW-20 Bench Carbon Substrate Storage Tank Mechanical Details and Sections

3 Equipment

- Appropriate PPE
- Health and Safety Plan
- Carbon substrate spill kit
- Water hose and fire extinguisher
- Wheel chocks to be placed behind delivery truck tires
- Electrical grounding equipment for truck, tank, and transfer equipment
- Eyewash supplies and safety shower
- Non-sparking tools (as needed)

4 Procedure

1. Safety equipment check
    1.1 Manually test safety shower and eyewash station
        1.1.1 Troubleshoot safety shower and eyewash station if not functioning properly.
        1.1.2 Do not proceed with tank filling unless functioning safety shower and eyewash station are available.
2. Human machine interface (HMI) system status check (* indicates IRZ00)
    2.1 Confirm Tank T-*0601 transducers are active
        2.1.1 Level transducer LT-*0652
        2.1.2 Temperature transducer TT-*0690
    2.2 Confirm that carbon substrate hose pumps PMP-*0640, PMP-*0641, and PMP-*0642 are not active
        2.2.1 Look at HMI to confirm they are all in the “OFF” position
    2.3 Confirm solenoid valve FV-*0611 is closed
    2.4 Verify alarm status of level switches within carbon storage secondary tanks and discharge piping to detect leaks
        2.4.1 LS-*0651 – IRZ Carbon Substrate Tank T-*0601 secondary tank
        2.4.2 LS-*0653 - IRZ Carbon Substrate Tank T-*0601 discharge piping
3. Tank T-IRZ00-0601 leak inspection
    3.1 Walk around entire tank
    3.2 Check for:
        3.2.1 Leaks along equipment surfaces
        3.2.2 Accumulated liquid on the ground
    3.3 Immediately alert project team if a leak is detected
4. Delivery truck staging
    4.1 Instruct truck driver not to exceed 5 miles per hour (mph) while driving onsite
    4.2 Use a spotter during delivery truck approach and parking
    4.3 Park delivery truck in designated parking space next to Tank T-IRZ00-0601
    4.4 Avoid backing transfer truck
    4.5 Place wheel chocks behind truck tires once it is parked
    4.6 Place buckets under hose connections in transfer equipment
5. Tank T-IRZ00-0601 volume check
    5.1 Check Tank T-IRZ00-0601 level on HMI
    5.2 Verify tank level manually with level gauge staff
    5.3 Request delivery volume from truck driver
    5.4 Calculate available space in tank

5.4.1 Verify Tank T-IRZ00-0601 has adequate available space for delivery volume

5.4.2 Float valve will shut off flow to tank at 90% of tank capacity

6. Delivery specification check

6.1 Confirm the appropriate product is being delivered

CAUTION: Open flames around ethanol fumes may cause a fire creating immediate danger to personnel conducting the procedures.

7. Ignition source check

7.1 Confirm truck engine has been turned off

7.2 Confirm no electrical equipment is operational near the transfer connections

7.3 Staff is not smoking (smoking not allowed onsite)

8. Tank T-IRZ00-0601 and equipment inspection

8.1 Inspect concrete pad for signs of settling or wear

8.2 Visually inspect secondary containment tank, pipes, and hoses for signs of leaks and/or wear

8.3 Ensure check valve V-IRZ00-0601B is installed in the appropriate direction

8.4 Ensure ball valve V-IRZ00-0601A is in the open position

8.5 Connect camlock hose to the camlock connections on the truck and T-IRZ00-0601

8.5.1 Visually inspect the hose for signs of wear

8.6 Manually (by hand) check that pipe, hose, and camlock connections are secure

8.6.1 Secure connections if they are loose

8.7 Visually inspect truck transfer hose, valves, and pump

9. Electrical grounding

9.1 Install electrical ground connection cable and clamp to prevent buildup of static charge

9.1.1 To be installed on truck, tank, and transfer equipment

9.1.2 Grounding cables and clamps to be connected to designated grounding electrode

10. Ethanol transfer

10.1 Initially check Tank T-IRZ00-0601 and transfer equipment for signs of leaks

10.1.1 Immediately stop ethanol transfer if a leak is observed

10.2 Monitor transfer pressure at start of transfer and every 2-3 minutes thereafter

10.2.1 Allowable pressure range: 0 – 10 PSI

10.3 Check Tank T-IRZ00-0601 level on the HMI every 2-3 minutes throughout transfer

11. Ethanol transfer completion

11.1 Disconnect delivery truck from Tank T-IRZ00-0601

11.1.1 Confirm the line is not under pressure

11.1.2 Confirm with driver that ethanol has been purged from delivery lines prior to disconnecting transfer equipment

1. Typically performed by pushing air through the lines

11.1.3 Confirm buckets are placed under connections prior to disconnecting transfer equipment

11.1.4 Disconnect hoses

11.1.5 Clean up any minor carbon substrate spills immediately with absorbent pads

11.1.6 Disconnect grounding/bonding cables and clamps

12. Delivery truck departure

12.1 Unchock the tires

12.2 Remind driver to stay under 5 mph

12.3 Have driver pull through to parking lot exit. Spot driver out to the main road

13. System status check (* indicates IRZ00)

13.1 Check system status on HMI

13.1.1 Record new Tank T-*0601 level upon transfer completion from LT-*0652

13.1.2 Record temperature on TT-*0690

13.1.3 Open solenoid valve FV-*0611

13.1.4 Activate carbon substrate hose pumps PMP-*0640, PMP-*0641, and PMP-*0642 on HMI

Standard Operating Procedure
PG&E Topock IRZ
Operation and Maintenance Plan

Title: MW-20 Bench Sampling Purge Water Transfer
Number: IRZ-SOP-06_Rev1

Creation Date: 9/8/2014

1 Background and Scope

Pacific Gas and Electric Company (PG&E) is implementing a groundwater remedy near the intersection of Park Moabi Road and Interstate 40, approximately 12 miles southeast of Needles, California at the PG&E Topock Compressor Station (TCS).

The objective of this Standard Operating Procedure (SOP) is to describe the procedure for the transfer of purge water from the sampling truck to the In Situ Reactive Zone (IRZ) well maintenance reagent day tank T-IRZ00-0619, and the subsequent discharge from T-IRZ00-0619 to the National Trails Highway (NTH) Injection Wells. Purge water is periodically generated during normal sampling activities at the site. Tank T-IRZ00-0619 is 1,000 gallons in volume and located at the MW-20 Bench Carbon Amendment Building/IRZ Well Maintenance Room.

2 Drawing Numbers

- I-06-03: MW-20 Bench Carbon Amendment Building P&ID Sheet 3 of 4

3 Equipment

- Appropriate personal protective equipment (PPE)
- Health and Safety Plan
- Chemical spill kit
- 5 gallon buckets
- Cones, delineators, and caution tape to delineate work zone around sampling truck
- Eyewash supplies and safety shower

4 Procedure

1. Mobilization

    1.1 Park sampling truck in the reagent deliver secondary containment pad at the MW-20 Bench Carbon Amendment Building

        1.1.1 Use a spotter to safely maneuver vehicle

1.1.2 Do not exceed 5 miles per hour (mph) while driving onsite

1.1.3 Select a level parking area

1.1.4 Avoid backing sampling truck – select parking spot that will allow driver to pull through to exit

1.1.5 Place wheel chocks behind truck tires once it is parked

2. IRZ well maintenance reagent day tank T-IRZ00-0619 discharge valve check

2.1 Verify the following valves are open (* indicates IRZ00)

2.1.1 V-*0620G

2.1.2 V-*0620H

2.1.3 V-*0620J

2.1.4 V-*0620K

2.1.5 V-*0604B

2.1.6 V-*0604D

2.1.7 V-*0604F

2.1.8 V-*0604M

3. IRZ well maintenance reagent day tank T-IRZ00-0619 automation

3.1 Select the “IRZ DAY TANK” tab on the human machine interface (HMI)

3.1.1 Select “AUTO” for automated valve FCV-*0631

3.1.2 Select “AUTO” for well maintenance reagent hose pump PMP-IRZ00-0643

1. Ensure IRZ well maintenance reagent day tank T-IRZ00-0619 has been pumped to the low set point dictated by LT-IRZ00-0659

3.2 Manually check purge water volume based on gradations on sampling truck tank

4. Connect sampling truck to IRZ well maintenance reagent day tank T-IRZ00-0619 influent conveyance piping

4.1 Place buckets under hose connections in transfer equipment

4.2 Remove dust cap from tank cam-lock connection

4.3 Connect truck transfer hose to cam-lock connection

4.4 Inspect IRZ well maintenance reagent day tank T-IRZ00-0619 and purge water transfer equipment

4.5 Visually inspect secondary pipes, hoses, and fittings for signs of leaks and/or wear

4.6 Manually open valves

4.6.1 V-*0620M

4.6.2 V-*0620N

5. Transfer purge water to IRZ well maintenance reagent day tank T-IRZ00-0619

5.1 Start sampling truck trash pump to begin transfer

5.2 Check IRZ well maintenance reagent day tank T-IRZ00-0619 conveyance lines and transfer equipment for signs of leaks

5.2.1 Immediately stop purge water transfer if a leak is observed

5.3 Verify that PMP-IRZ00-0643 is operational when the high setpoint is reached

5.4 Check Tank T-IRZ00-0619 level (LT-IRZ00-0659) on the HMI every 1-2 minutes throughout transfer

5.5 End transfer once all fluid has been conveyed to IRZ well maintenance reagent day tank T-IRIZ00-0619

5.6 Turn off sample truck trash pump

5.7 Confirm buckets are placed under hose/pipe connections

5.8 Disconnect sampling truck from the dry break quick connect

5.9 Drain excess water into buckets

5.9.1 Clean up any minor purge water spills immediately with absorbent pads in the event of a spill

5.10 Replace dust cap

5.11 Water from the buckets shall be manually poured into T-IRZ00-0619

5.11.1 Avoid splashing

6. IRZ well maintenance reagent day tank T-IRZ00-0619 automation shutdown

6.1 Select the “IRZ DAY TANK” tab on the HMI

6.1.1 Select “OFF” for automated valve FCV-IRZ00-0631

6.1.2 Select “OFF” for well maintenance reagent hose pump PMP-IRZ00-0643

7. IRZ well maintenance reagent day tank T-IRZ00-0619 discharge valve check

7.1 Verify the following valves are closed (* indicates IRZ00)

7.1.1 V-*0604B

7.1.2 V-*0604D

7.1.3 V-*0604F

7.1.4 V-*0604M

8. Demobilization

8.1 Unchock tires

8.2 Use a spotter to safely maneuver vehicle

8.3 Do not exceed 5 mph while driving onsite

Standard Operating Procedure
PG&E Topock IRZ
Operation and Maintenance Plan

Title: Bench Scale Testing of Clean-in-Place Reagents
Number: IRZ-SOP-07_Rev0

Creation Date: 9/8/2014

1 Background and Scope

Pacific Gas and Electric Company (PG&E) is implementing a groundwater remedy near the intersection of Park Moabi Road and Interstate 40, approximately 12 miles southeast of Needles, California at the PG&E Topock Compressor Station (TCS).

The objective of this Standard Operating Procedure (SOP) is to describe the procedure for testing clean-in-place (CIP) chemicals to determine the optimal type and strength required for the various types of fouling deposits that may occur in the IRZ system. Procedures apply to both onsite and offsite testing.

2 Drawing Numbers

- None

3 Equipment

- Health and Safety Plan
- Appropriate personal protective equipment (PPE)
- Faceshield
- Chemical resistant gloves
- Chemical spill kit
- Eyewash supplies and safety shower
- Chemically compatible 250 ml beakers and containers
- Thermometer
- Mortar and pestle
- Weighing scale
- Drying oven
- Chemical hood
- Microscope
- Safety shower and eye wash station

4 Procedure

1. Prebench Test Work

   1.1 Order chemicals to be tested

   1.2 Manually test safety shower and eyewash station

   1.3 Obtain fouling deposits to be tested

2. Bench Testing

   Note: Perform all testing under a chemical hood

   2.1 Preparation

      2.1.1 Crush sample with mortar and pestle if hard and crystalline.

      2.1.2 Separate sample into multiple, equal masses reflective of the number of treatments to evaluate.

      2.1.3 Add sample portion to a 250 ml beaker

      2.1.4 Label each beaker according to the treatment method tested

   2.2 Chemical Guidelines

      2.2.1 Acid and caustics should be NSF, food grade, or approved alternates,

      2.2.2 Use concentrations that can be field implemented

      2.2.3 For acids, use standard concentrations first if evaluating multiple concentrations

   Note: that when using two acids, a dispersant is almost always needed for stabilization of reaction

      2.2.4 For blended acids, check compatibility and threshold allowances.

      2.2.5 Enhancers and surfactants: utilize NSF approved products and follow manufacturer's guidelines

      2.2.6 Inhibitors: test with single acids after blending with water, use on NSF approved products

   2.3 Acids Used in the Testing:

      2.3.1 Hydrochloric acid (6% solution of 20° concentrated HCL)

      2.3.2 Hydrochloric acid (8% solution of 20° concentrated HCL)

      2.3.3 Hydrochloric acid (10% solution of 20° concentrated HCL)

      2.3.4 Phosphoric acid (6% solution of 75% PA)

      2.3.5 Phosphoric acid (8% solution of 75% PA)

      2.3.6 Phosphoric acid (10% solution of 75% PA)

      2.3.7 Sulfamic acid (5% solution of 100% blended SA)

      2.3.8 Sulfamic acid (5% solution of 100% blended SA)

      2.3.9 Oxalic acid (6% of 7% solubilized OA)

      2.3.10 Oxalic acid (6% of 7% solubilized OA)

      2.3.11 Hydroxyacetic acid (6% of 70% concentrated HAA)

      2.3.12 Hydroxyacetic acid (6% of 70% concentrated HAA)

2.4 Chemicals Used in the Testing:

2.4.1 Dispersants – test 0.5%, 1.5%, and 3%

2.4.2 Biodispersants – test at 1.5% and 3%

2.4.3 Surfactants – test at 0.1% (note foaming)

2.4.4 Iron chelation – test at 0.001% and increase if Fe content exceeds 1.0 mg/l

2.4.5 Emulsifiers – test at 0.001%, 0.1% (note foaming)

3. Treatment Evaluation:

3.1 Record observation on log sheet noting heat, odor, effervescence, etc.

3.2 Record appearance and effectiveness of dissolution as a percent of the whole

3.3 Evaluate the reaction at 15 minutes, 30 minutes, 1 hour and 4 hours

3.4 Evaluate level of enhancement added at 30 minutes and 1 hour time periods with the addition of mechanical energy

4. Post Evaluation

4.1 Photograph deposits as received, after drying, and a microscopic 20-30x magnification

4.2 Allow the test solutions to remain under the chemical hood and observe the time it takes for dissolution of the sample.

4.3 Record the estimated percentage of dissolution and general observations of residue

4.4 Neutralize all solutions following completion of testing and dispose of properly

Standard Operating Procedure
PG&E Topock IRZ
Operation and Maintenance Plan

Title: Clean-In-Place Reagent Delivery
Number: IRZ-SOP-08_Rev1
Creation Date: 9/8/2014

1 Background and Scope

Pacific Gas and Electric Company (PG&E) is implementing a groundwater remedy near the intersection of Park Moabi Road and Interstate 40, approximately 12 miles southeast of Needles, California at the PG&E Topock Compressor Station (TCS).

The objective of this Standard Operating Procedure (SOP) is to describe the procedure for delivery of drums of Clean-In-Place (CIP) system reagent. The CIP system is designed to circulate acid- or caustic-based maintenance solutions within conveyance pipelines of the National Trails Highway (NTH) In Situ Reactive Zone (IRZ), to address biological fouling and/or mineral scaling. The CIP events are anticipated to coincide with NTH IRZ system shutdown periods at a frequency of approximately once per year. CIP reagent is stored in drums or totes until it is added to frac tank T-IRZ00-0623 located at the MW-20 Bench area as described in IRZ-SOP-09.

2 Drawing Numbers

- I-06-04: MW-20 Carbon Amendment Building P&ID Sheet 4 of 4

3 Equipment

- Appropriate personal protective equipment (PPE)
- Health and Safety Plan
- Chemical spill kit
- Cones, delineators, and caution tape to delineate work zone around delivery truck and tank
- Wheel chocks to be placed behind delivery truck tires
- Eyewash supplies and safety shower

4 Procedure

1. Pre-transfer health and safety procedures

    1.1 Manually test the eyewash station and safety shower at the MW-20 Bench Carbon Amendment Building

    1.2 Run water and verify the temperature of the water is cool enough for exposure

2. CIP delivery truck arrival
    2.1 Verify the truck has a lift gate
    2.2 Instruct truck driver not to exceed 5 miles per hour (mph) while driving onsite
    2.3 Use a spotter during delivery truck approach and parking
    2.4 Select a level parking area
    2.5 Avoid backing transfer truck – select parking spot that will allow driver to pull through to exit
    2.6 Place wheel chocks behind truck tires once it is parked
3. Check CIP reagent specifications
    3.1 Confirm the appropriate product is being delivered
    3.2 Sign for the delivery if it is the correct product

CAUTION: Severe burns may occur if PPE is not worn and a spill occurs

4. CIP reagent delivery offloading and staging
    4.1 CIP reagent to be delivered in drums
    4.2 Secure drum to a drum dolly
    4.3 Move drum to the lift gate
    4.4 Instruct the delivery driver to lower the lift gate to the ground
    4.5 Roll the drum over to secondary containment adjacent to Frac Tank T-IRZ00-0623
    4.6 Unstrap the drum from the drum dolly
5. Direct delivery driver offsite
    5.1 Unchock the tires
    5.2 Remind driver to stay under 5 mph
    5.3 Have driver pull through to parking lot exit
    5.4 Spot driver out to main road
6. Procedures for CIP mixing and application provided in IRZ-SOP-09

Standard Operating Procedure
PG&E Topock IRZ
Operations and Maintenance Plan

Title: Clean-in-Place Solution Mixing and Application
Number: IRZ-SOP-09_Rev1

Creation Date: 9/8/2014

1 Background and Scope

Pacific Gas and Electric Company (PG&E) is implementing a groundwater remedy near the intersection of Park Moabi Road and Interstate 40, approximately 12 miles southeast of Needles, California at the PG&E Topock Compressor Station (TCS).

The objective of this Standard Operating Procedure (SOP) is to describe the procedure for Clean-In-Place (CIP) solution mixing and application. The CIP system is designed to circulate acid- or caustic-based maintenance solutions within active and spare pipelines of the National Trails Highway (NTH) In Situ Reactive Zone (IRZ), to address biological fouling and/or mineral scaling. The CIP events are scheduled to coincide with the regular NTH IRZ system shutdown periods at a frequency of approximately once per year; however, depending on the level of fouling, CIP events may be completed as infrequently as once every five years. Concentrated CIP reagent is mixed with water in the 20,000-gallon Clean-In-Place Frac Tank T-IRZ00-0623 located at the MW-20 Bench area prior to circulation throughout the conveyance system. Procedures included this SOP involve manual valve verifications along with human machine interface (HMI) to run the automated circulation process. Manual oversight and operations are critical to proper CIP application. System automation will only convey processes after valves and flow processes are properly verified.

2 Drawing Numbers

- I-04-02: IRZ Dual Screen Extraction Wells P&ID
- I-04-03: IRZ Single Screen Injection Wells P&ID
- I-04-04: IRZ Dual Screen Injection Wells P&ID
- I-04-05: IRZ Dual Screen Cluster Injection Wells P&ID Sheet 1 of 2
- I-04-06: IRZ Dual Screen Cluster Injection Wells P&ID Sheet 2 of 2
- I-06-01: IRZ Carbon Amendment Building P&ID Sheet 1 of 4
- I-06-02: IRZ Carbon Amendment Building P&ID Sheet 2 of 2
- I-06-03: IRZ Carbon Amendment Building P&ID Sheet 3 of 4
- I-06-04: IRZ Carbon Amendment Building P&ID Sheet 4 of 4

3 Equipment

- Appropriate personal protective equipment (PPE)

- Health and Safety Plan
- Chemical spill kit
- Eyewash supplies and safety shower
- IRZ-SOP-02 MW-20 Bench System Shutdown

4 Procedure

1. Prefield verification
   1.1 Obtain solution and pH requirements for CIP event
2. Safety equipment check
   2.1 Manually test safety shower and eyewash station
      2.1.1 Troubleshoot safety shower and eyewash station if not functioning properly.
      2.1.2 Do not proceed with CIP solution mixing and application unless functioning safety shower and eyewash station are available.
3. CIP reagent volume and specification check
   3.1 Confirm necessary CIP reagent volume and target pH
      3.1.1 Mixed reagent volume: 10,000 gallons
      3.1.2 Target pH:
         1. Acidic reagent: 2.5 standard units (SU)
         2. Caustic reagent: 11.5 SU
4. Shutdown MW-20 Bench
   4.1 Follow IRZ-SOP-02 to shut down MW-20 bench carbon amendment if the system is operational
5. Fresh water fill to T-IRZ00-0623
   5.1 Verify open valves: Drawing I-06-03 and I-06-04
      5.1.1 V-IRZ00-0628A, normally closed
   5.2 Verify closed valves: Drawing I-06-03
      5.2.1 V-IRZ00-0625A, normally open
      5.2.2 V-IRZ00-0625E, normally open
   5.3 Select the “CIP APPLICATION” tab on the HMI
      5.3.1 Place “FRESHWATER FILL” into “AUTO”
      5.3.2 Manually observe FCV-IRZ00-0628R open on the HMI
      5.3.3 LT-IRZ00-0658 will conclude the fresh water fill automatically when the tank is half full (approximately 10,000 gallons)
   5.4 Place “FRESHWATER FILL” into “OFF”
   5.5 Close valve V-IRZ00-0628A to assure fresh water is not added during CIP mixing application
6. CIP Valve Arrangements (* indicates IRZ00)

6.1 MW-20 Bench frac tank pad open valves: Drawing I-06-04

6.1.1 V-*0628G, normally closed

6.1.2 V-*0626C, normally closed

6.1.3 V-*0626F, normally closed

6.1.4 V-*0626H, normally closed

6.1.5 V-*0626I, normally closed

6.2 MW-20 Bench frac tank pad closed valves: Drawing I-06-04

6.2.1 V-*0628E, normally closed

6.2.2 V-*0626O, normally closed

6.2.3 V-*0626J, normally closed

6.3 MW-20 Bench Carbon Amendment Building open valves: Drawing I-06-01

6.3.1 V-*0609B, normally open

6.3.2 V-*0609C, normally open

6.3.3 V-*0609D, normally open

6.3.4 V-*0610A, normally closed

6.3.5 V-*0610C, normally closed

6.3.6 V-*0610E, normally closed

6.3.7 V-*0610F, normally closed

6.3.8 V-*0610G, normally closed

6.4 MW-20 Bench Carbon Amendment Building closed valves: Drawing I-06-01

6.4.1 V-*0609A, normally open

6.4.2 V-*0609H, normally open

6.4.3 V-*0609K, normally open

6.4.4 V-*0609P, normally closed

6.4.5 V-*0610H, normally closed

6.5 Clean in place vault open valves

6.5.1 V-*0402J, normally closed: Drawing I-04-02

6.5.2 V-*0424A, normally closed: Drawing I-04-06

6.6 Clean in place vault closed valves

6.6.1 V-*0403I, normally closed: Drawing I-04-03

6.6.2 V-*0412, normally closed: Drawing I-04-04

6.6.3 V-*0424B, normally closed: Drawing I-04-06

7. Begin recirculation of fresh water through conveyance lines

7.1 Select the “CIP APPLICATION” tab on the HMI

7.1.1 Place “CIP APPLICATION” into “AUTO”

7.1.2 Manually observe FCV-IRZ00-0628R open on the HMI

7.1.3 Manually observe FCV-IRZ00-0632 open on the HMI

7.1.4 Manually observe pump PMP-IRZ00-0644 turn on

7.2 With the process running with fresh water walk around the MW-20 Bench and look for signs of leakage

7.2.1 IF the system is running without error proceed to Step 7.3

7.2.2 IF a leak is observed

THEN stop the process on the HMI by placing “CIP APPLICATION” in “OFF”

THEN clean up the spill

8. pH monitoring setup

8.1 Mount pH probe in Tank T-IRZ00-0623

8.1.1 Manually (by hand) confirm that pH probe is secure

9. CIP reagent addition

CAUTION: PPE must be worn at all times when dealing with the CIP reagent

9.1 Remove the bung from the drum of CIP reagent

9.2 Install a drum pump into the drum of CIP reagent

9.3 Connect the drum pump discharge to the quick connect at V-IRZ00-0628E

9.4 Open V-IRZ00-0628E at a 45 degree angle to throttle flow

9.5 Plug in the drum pump and turn it on for 10 seconds

9.6 Verify the tank pH on the pH probe

9.6.1 Repeat Steps 9.5 and 9.6 until the tank reaches the target pH outlined by the maintenance supervisor

9.7 As the CIP reagent buffers through dissipation of scale more reagent will need to be added during the process

9.7.1 Repeat Steps 9.5 and 9.6 intermittently until the tank reaches the target pH outlined by the maintenance supervisor

9.8 Run the process until the pH holds for a duration of 1 hour

9.8.1 Unless the maintenance supervisor approves of an earlier stop time

9.9 Select the “CIP APPLICATION” tab on the HMI

9.9.1 Place “CIP APPLICATION” into “OFF”

9.9.2 Manually observe pump PMP-IRZ00-0644 turn off

9.9.3 Manually observe FCV-IRZ00-0628R close on the HMI

9.9.4 Manually observe FCV-IRZ00-0632 close on the HMI

9.10 Close V-IRZ00-0628E

9.11 Disconnect the drum pump

9.12 Replace bung on drum

10. Discharge CIP remedy water to the Remedy-produced Water Conditioning Plant as outlined in IRZ-SOP-10
11. Rinse out T-IRZ00-0623 with fresh water
    - 11.1 Select the “CIP APPLICATION” tab on the HMI
      - 11.1.1 Place “FRESHWATER FILL” into “AUTO”
      - 11.1.2 Manually observe FCV-IRZ00-0628R open on the HMI
      - 11.1.3 LT-IRZ00-0658 will conclude the fresh water fill automatically when the tank is half full (approximately 10,000 gallons)
    - 11.2 Place “FRESHWATER FILL” into “OFF”
    - 11.3 Close valve V-IRZ00-0628A to assure fresh water is not added during the fresh water flush of the lines
12. Flush the conveyance lines with fresh water
    - 12.1 Select the “CIP APPLICATION” tab on the HMI
      - 12.1.1 Place “CIP APPLICATION” into “AUTO”
      - 12.1.2 Manually observe FCV-IRZ00-0628R open on the HMI
      - 12.1.3 Manually observe FCV-IRZ00-0632 open on the HMI
      - 12.1.4 Manually observe pump PMP-IRZ00-0644 turn on
    - 12.2 Allow the fresh water to circulate for 1 hour
13. Discharge conveyance water to the Remedy-produced Water Conditioning Plant as outlined in IRZ-SOP-10
14. Verify valve positions following conclusion of CIP application (* indicates IRZ00)
    - 14.1 Fresh water valves open: I-06-03 and I-06-04
      - 14.1.1 V-IRZ00-0625A, normally open
      - 14.1.2 V-IRZ00-0625E, normally open
    - 14.2 Fresh water closed valves: Drawing I-06-03
      - 14.2.1 V-IRZ00-0628A, normally closed
    - 14.3 MW-20 Bench frac tank pad closed valves: Drawing I-06-04
      - 14.3.1 V-*0626C, normally closed
      - 14.3.2 V-*0626F, normally closed
      - 14.3.3 V-*0626H, normally closed
      - 14.3.4 V-*0626I, normally closed
    - 14.4 MW-20 Bench frac tank pad closed valves: Drawing I-06-04
      - 14.4.1 V-*0628E, normally closed
      - 14.4.2 V-*0628G, normally closed
      - 14.4.3 V-*0626O, normally closed
      - 14.4.4 V-*0626J, normally closed

14.5 MW-20 Bench Carbon Amendment Building open valves: Drawing I-06-01

14.5.1 V-*0609A, normally open

14.5.2 V-*0609B, normally open

14.5.3 V-*0609C, normally open

14.5.4 V-*0609D, normally open

14.5.5 V-*0609H, normally open

14.5.6 V-*0609K, normally open

14.5.7 V-*0610H, normally closed

14.5.8 V-*0609P, normally closed

14.6 MW-20 Bench Carbon Amendment Building closed valves: Drawing I-06-01

14.6.1 V-*0610A, normally closed

14.6.2 V-*0610C, normally closed

14.6.3 V-*0610E, normally closed

14.6.4 V-*0610F, normally closed

14.6.5 V-*0610G, normally closed

14.7 Clean in place vault open valves

14.7.1 None

14.8 Clean in place vault closed valves

14.8.1 V-*0402J, normally closed: Drawing I-04-02

14.8.2 V-*0424A, normally closed: Drawing I-04-06

14.8.3 V-*0403I, normally closed: Drawing I-04-03

14.8.4 V-*0412, normally closed: Drawing I-04-04

14.8.5 V-*0424B, normally closed: Drawing I-04-06

15. Contact the maintenance supervisor to notify them of completed activities

16. Restart the system as outlined in IRZ-SOP-01

Standard Operating Procedure
PG&E Topock IRZ
Operation and Maintenance Plan

Title: Discharge of Clean-in-Place Water to the Remedy-Produced Water Conditioning Plant

Number: IRZ-SOP-10_Rev1

Creation Date: 9/8/2014

1 Background and Scope

Pacific Gas and Electric Company (PG&E) is implementing a groundwater remedy near the intersection of Park Moabi Road and Interstate 40, approximately 12 miles southeast of Needles, California at the PG&E Topock Compressor Station (TCS).

The objective of this Standard Operating Procedure (SOP) is to describe the procedure for the transfer of clean-in-place (CIP) water from MW-20 Bench Frac Tank T-IRZ00-0623 to the Remedy-Produced Water Conditioning Plant. CIP maintenance activities produce water that must be conveyed to the Remedy-Produced Water Conditioning Plant for treatment on an as needed basis. This SOP covers the manual and automated procedures for conveyance of CIP water in tank T-IRZ00-0623 to the Remedy-Produced Water Conditioning Plant. This SOP assumes that all CIP application to the In Situ Reactive Zone (IRZ) conveyance lines outlined in IRZ-SOP-09 has been completed and the CIP water is being stored in frac tank T-IRZ00-0623 awaiting transfer.

2 Drawing Numbers

- I-06-04: MW-20 Bench Carbon Amendment Building P&ID Sheet 4 of 4
- REMEDY-SOP-06

3 Equipment

- Appropriate personal protective equipment (PPE)
- Health and Safety Plan

4 Procedure

1. Pre-startup human machine interface (HMI) checks
    1.1 Check system alarm status on HMI
        1.1.1 Select “ALARMS” tab on HMI
        1.1.2 Verify if any alarm conditions exist associated with the system
            1. Document any alarm conditions in the checklist if they exist

1.2 Attempt to troubleshoot alarms

1.2.1 Call project engineer or maintenance supervisor if alarms cannot be easily addressed

2. Shutdown of automatic backwashing activities

2.1 Select the "AUTOMATIC BACKWASH" tab on the HMI to view the National Trails Highway (NTH) IRZ and Inner Recirculation Loop (IRL) injection well valve positions

2.1.1 To remove ALL wells from automatic operation place extraction pumps in the "OFF" position

2.2 Verify that the Backwash Frac Tank T-IRZ00-0621 is not receiving flow from other processes during the scheduled transfer

3. Valve check

3.1 Select the "CIP TRANSFER" tab on the HMI

3.1.1 Select "CLOSE" for actuated valve FCV-IRZ00-0632

3.2 Manually close valve V-IRZ00-0626B on the backwash transfer line to Backwash Frac Tank T-IRZ00-0621

3.3 Manually open valve V-IRZ00-0626O to transfer pump PMP-IRZ00-0645 to the Remedy-produced Water Conditioning Plant

4. Transfer of CIP water to the Remedy-produced Water Conditioning Plant

4.1 Select the "CIP TRANSFER" tab on the HMI to view the CIP process screen

4.2 Place FCV-IRZ00-0633 into the "OPEN" position

4.3 Place PMP-IRZ00-0645 into "AUTO" to begin the transfer

4.3.1 Transfer will only commence if the water levels in the Remedy-produced Water Conditioning Plant influent tanks (TNK-RTP01-1101, -1102, -1103, -1104) are below the high-level switch (LSH-RTP01-1151, -1153, -1155, -1157) elevations

4.4 Visually inspect the lines for signs of leaks

4.5 Once T-IRZ00-0623 is empty LT-IRZ00-0658 will initiate the programmable logic controller to do the following

4.5.1 FCV-IRZ00-0633 will close

4.5.2 PMP-IRZ00-0645 will automatically shutoff

4.6 Place transfer pump PMP-IRZ00-0645 into "OFF" to make sure it does not turn on again in association with future CIP activities

5. Manual valve check

5.1 Manually close valve V-IRZ00-0626O to the Remedy-produced Water Conditioning Plant

5.2 Manually open valve V-IRZ00-0626B on the backwash transfer line to Backwash Frac Tank T-IRZ00-0621

6. Proceed to REMEDY-SOP-06 for procedures on restarting the automatic backwashing

Standard Operating Procedure
PG&E Topock IRZ
Operation and Maintenance Plan

Title: Use of Portable Tanks for Individual Well Dosing
Number: IRZ-SOP-11_Rev0

Creation Date: 9/8/2014

1 Background and Scope

Pacific Gas and Electric Company (PG&E) is implementing a groundwater remedy near the intersection of Park Moabi Road and Interstate 40, approximately 12 miles southeast of Needles, California at the PG&E Topock Compressor Station (TCS).

The objective of this Standard Operating Procedure (SOP) is to describe the procedure for dilute carbon substrate dosing using portable tanks at injection wells at the NTH IRZ, TCS Recirculation Loop, and Inner Recirculation Loop (IRL). This alternative means of reagent delivery allows for added flexibility in long-term system operation. Portable tanks may be used for specific, targeted injections on an as-needed basis, or during times when carbon dosing equipment is undergoing maintenance. Portable tanks may be preferred over pipeline reagent conveyance at locations where the carbon injection volume is low, injections occur with long rest periods, or long pipelines are expected to pose health and safety and/or long-term O&M challenges.

2 Drawing Numbers

- I-03-03: TCS Loop Injection Wells P&ID
- I-04-03: IRZ Single Screen Injection Wells P&ID
- I-04-04: IRZ Dual Screen Injection Wells P&ID
- I-04-05: IRZ Dual Screen Cluster Injection Wells P&ID Sheet 1 of 2
- I-04-06: IRZ Dual Screen Cluster Injection Wells P&ID Sheet 2 of 2
- I-05-02: Inner Recirculation Loop Injection Wells Type 1 P&ID
- I-05-03: Inner Recirculation Loop Injection Wells Type 2 P&ID
- M-03-04: TCS Loop Injection Well Vaults Mechanical Details Sheet 1 of 2
- M-03-05: TCS Loop Injection Well Vaults Mechanical Details Sheet 2 of 2
- M-04-05: IRZ Single Screen Injection Well Vaults Mechanical Details
- M-04-06: IRZ Dual Screen Injection Well Vaults Mechanical Details
- M-04-07: IRZ Dual Screen Injection Well Vaults Mechanical Sections
- M-04-08: IRZ Dual Screen Cluster Injection Well Vaults Mechanical Details
- M-04-09: IRZ Dual Screen Cluster Injection Well Vaults Mechanical Sections

- M-05-05: Inner Recirculation Loop Injection Well Vaults Mechanical Details
- M-05-06: Inner Recirculation Loop Injection Well Vaults Mechanical Sections

3 Equipment

- Appropriate personal protective equipment (PPE)
- Site-Specific Health & Safety Plan
- Chemical spill kit
- Flexible hose
- Necessary fittings/adapters for connection of portable tank to vault manual addition port
- Cones, delineators, and Caution tape to delineate work zone
- Wheel chocks to be placed behind delivery truck tires
- Eyewash supplies

4 Procedure

1. Injection parameters
    1.1 Obtain target injection parameters from Maintenance Supervisor
        1.1.1 Injection volume
        1.1.2 Injection solution concentration
        1.1.3 Allowable injection pressure
        1.1.4 Expected injection flow rate
    1.2 Confirm that injection concentration is less than 10% by volume if injecting ethanol
        1.2.1 Flash point of 10% by volume ethanol solution is 120 degrees Fahrenheit (°F)
2. Mobilization to tank storage location
    2.1 Do not exceed 5 miles per hour (mph) while driving onsite
    2.2 Select a level parking area
3. Tank loading
    3.1 Load small (up to 500 gallon) by hand using proper lifting techniques (if tank is not already secured to truck)
        3.1.1 Use two staff to lift empty tank
        3.1.2 Use legs instead of back to lift
        3.1.3 Request additional assistance if needed
        3.1.4 Secure tank to truck using appropriate utility straps
4. Pre-transfer health and safety procedures
    4.1 Manually test the eyewash station and safety shower at the MW-20 Bench Carbon Amendment Building

4.2 Run water and verify the temperature of the water is cool enough for exposure

5. Tank filling

5.1 Fill portable tank with water

5.1.1 Mobilize to MW-20 Bench water spigot

1. Do not exceed 5 miles per hour (mph) while driving onsite
2. Select a level parking area

5.1.2 Delineate work area

1. Using cones, delineators, and/or caution tape
2. Place wheel chocks behind truck tires

5.1.3 Connect tank to water spigot

1. Use requisite fittings, adapters, and hoses

5.1.4 Fill tank with target water volume

5.1.5 Close all tank lids/openings

5.2 Fill portable tank with carbon substrate

5.2.1 Mobilize to MW-20 Bench decon pad

1. Carbon substrate used for portable tank injections will be stored in drums/totes at decon pad
2. Do not exceed 5 mph while driving onsite

5.2.2 Delineate work area

1. Using cones, delineators, and/or caution tape
2. Place wheel chocks behind truck tires

5.2.3 Electrical grounding

1. Install electrical ground connection cable and clamp to prevent buildup of static charge
2. To be installed on truck, tank, and transfer equipment
3. Grounding cables and clamps to be connected to designated grounding electrode

5.2.4 Add target carbon substrate volume to portable tank

1. Use 5-gallon buckets
2. Fill 5-gallon buckets by gravity by connecting a hose to the outlet of the drum/tote
3. Do not fill 5-gallon buckets more than 75% full
4. Place lid on bucket
5. Manually transfer carbon substrate to tank slowly to avoid splashing

5.2.5 Close all tank lids/openings

6. Mobilization to injection well vault

6.1 Do not exceed 5 miles per hour (mph) while driving onsite

6.2 Select a level parking area

6.3 Park work truck so that trailer is adjacent to vault

7. Open vault lid

7.1 Remove lid bolts using proper tools

7.2 Use proper lifting techniques

7.2.1 Use two staff to lift vault lids

7.2.2 Use legs instead of back to lift

7.2.3 Ensure vault lid supports are secure after opening

8. Tank connection to injection well

8.1 Electrical grounding

8.1.1 Install electrical ground connection cable and clamp to prevent buildup of static charge

8.1.2 To be installed on truck, tank, and transfer equipment

8.1.3 Grounding cables and clamps to be connected to designated grounding electrode

8.2 Enter injection vault

8.3 Inspect 1-inch diameter injection well manual additional port

8.3.1 Remove cap, if present

8.3.2 Visual check for objects / obstructions

8.3.3 Confirm manual addition port ball valve is closed

8.4 Connect portable tank outlet to manual addition port

8.4.1 Use temporary flexible hosing and requisite adapters/fittings

8.4.2 Connect flow meter in line with temporary conveyance equipment

8.4.3 Lock cam-lock connections at tank outlet and injection well manual additional port

8.4.4 Visually inspect hose for leaks or signs of excessive wear

9. Portable tank injection

9.1 Open ball valve at outlet of portable tank

9.2 Inspect hose for leaks

9.2.1 Stop injection and replace hose if leaking

9.3 Open ball valve at manual addition port

9.4 Start generator

9.4.1 Plug in injection pump

9.5 Start injection pump at low speed

9.6 Check injection pressure using pressure gauge inside vault

9.6.1 Immediately upon starting pump

9.6.2 Any time the pump speed is adjusted

9.6.3 At least once every 15 minutes throughout the injection

9.7 Confirm injection pressure is below maximum allowable pressure

9.7.1 Reduce pump speed if injection pressure

9.8 Check injection flow rate

9.8.1 Flow meter reading

1. Compare flow meter reading to expected flow rate
2. Increase pump speed if flow rate is below expected level and injection pressure is below allowable level

9.8.2 Visually look for fluid flow through flexible hose if flow meter does not detect flow

9.8.3 Troubleshoot setup if it is not obvious that fluid is flowing

1. Check valve configuration
2. Contact project team

10. Injection completion

10.1 Confirm injection has finished

10.1.1 Dilute reagent is no longer flowing through flexible hose

10.1.2 Fluid level is below tank outlet

10.2 Turn off injection pump

10.3 Close portable tank outlet ball valve

10.4 Disconnect hose from portable tank

10.4.1 Allow residual fluid to drain into injection well

10.5 Disconnect hose from manual addition port

10.6 Close manual addition port ball valve

11. Close vault lid

11.1 Use proper lifting techniques

11.1.1 Use two staff to lower vault lids

11.1.2 Use legs instead of back to lift

11.2 Secure bolts

12. Demobilization

12.1 Remove wheel chocks

12.2 Demobilize from injection vault

12.3 Mobilize to MW-20 Bench water spigot

12.3.1 Do not exceed 5 miles per hour (mph) while driving onsite

12.3.2 Select a level parking area

12.4 Delineate work area

12.4.1 Using cones, delineators, and/or caution tape

12.4.2 Place wheel chocks behind truck tires

12.5 Rinse out tank with hose

12.5.1 Drain rinsate into 5 gallon buckets

12.5.2 Drain buckets into MW-20 Bench sump for distribution to injection wells

Standard Operating Procedure
PG&E Topock IRZ
Operation and Maintenance Plan

Title: Offsite Trucking of Clean-in-Place Water from MW-20 Bench

Number: IRZ-SOP-12_Rev1

Creation Date: 9/8/2014

1 Background and Scope

Pacific Gas and Electric Company (PG&E) is implementing a groundwater remedy near the intersection of Park Moabi Road and Interstate 40, approximately 12 miles southeast of Needles, California at the PG&E Topock Compressor Station (TCS).

The objective of this Standard Operating Procedure (SOP) is to describe the procedure for transferring clean-in-place (CIP) water from frac tank T-IRZ00-0623 at the MW-20 Bench to the truck fill station for off-site trucking. This procedure is controlled both manually and through automation with the use of the human machine interface (HMI). This SOP assumes that all CIP application to the In Situ Reactive Zone (IRZ) conveyance lines outlined in IRZ-SOP-09 has been completed and the CIP water is currently stored in frac tank T-IRZ00-0623 awaiting transfer.

2 Drawing Numbers

- I-06-04: MW-20 Bench Carbon Amendment Building P&ID Sheet 4 of 4

3 Equipment

- Appropriate personal protective equipment (PPE)
- Health and Safety Plan
- 5-gallon buckets
- Tablet for data recording

4 Procedure

1. Pre-transfer health and safety procedures
   - 1.1 Manually test the eyewash station and safety shower at the MW-20 Bench Carbon Amendment Building
   - 1.2 Run water and verify the temperature of the water is cool enough for exposure
2. Pre-startup human machine interface (HMI) checks
   - 2.1 Check system alarm status on HMI
   - 2.2 Select “ALARMS” tab on HMI

2.3 Verify if any alarm conditions exist associated with the system

1. Document any alarm conditions in the checklist if they exist
2. Attempt to troubleshoot any alarms

2.4 Call project engineer or maintenance supervisor if alarms cannot be readily addressed

3. Loading site preparation

3.1 Inspect concrete pad for signs of settling or wear

3.2 Confirm that load-out hose is properly stored and not in the path of trucks entering the loading area

3.3 Visually inspect load-out hose for signs of wear

3.4 Confirm that necessary hoses and connections are present

4. Truck staging and hook-up

4.1 Instruct truck driver not to exceed 5 miles per hour (mph) while driving onsite

4.2 Confirm that driver and equipment meet job requirements

1. Verify that the driver has completed a pre-trip inspection on the truck and trailer
2. Verify that the driver currently driving the truck is the same driver who performed the pre-trip inspection

NOTE: If any deficiencies are discovered per Step 4.2, contact the Maintenance Supervisor before proceeding.

4.3 Use a spotter to direct truck driver during approach and alignment of truck on containment pad

1. Spotter to use hand signals to stop truck when the front trailer axle is at the north end of the containment pad (opposite of entrance)
2. Ensure that there is enough room in the containment pad behind the trailer to catch any minor spills

4.4 Place wheel chocks behind truck tires once truck is parked

4.5 Place 5-gallon bucket under trailer's inlet connection

4.6 Have driver hook up to the load-out hose

NOTE: Driver is responsible for:

- Attaching the load-out hose to the truck
- Making sure the truck tank is vented
- Determining how many gallons are to be loaded
- Disconnecting the load-out hose
- Operating the load valve (trailer valve) on the truck

Operator is responsible for:

- All valves upstream of the load-out hose

- Operating the transfer pump PMP-IRZ00-0644
- Telling the driver how many gallons have been loaded

4.7 Connect load-out hose to the dry-break coupling on the remedy-produced water line

4.8 Manually check that pipe, hose, and connections are secure

1. Secure any loose connections

4.9 Place 5-gallon buckets under hose connections in transfer equipment

5. Remedy-produced water transfer

5.1 Record the beginning totalizer reading (FIT-IRZ00-0680A) on the shipping documentation and tablet

5.2 Confirm with the driver that the line isolation valves are properly positioned before opening tank valves

5.3 Valve check (* indicates IRZ00)

1. Open manual valves/verify position
    a. V-*0626C
    b. V-*0626F
    c. V-*0626H
    d. V-*0626J
2. Close manual valve/verify position
    a. V-*0626I
    b. V-*0626O

5.4 Have driver check truck valves and vents

5.5 Confirm with driver that truck is ready to receive water

1. Open load supply valve V-IRZ00-0626L

5.6 Select the “CIP TRANSFER” tab on the HMI to view the CIP process screen

5.7 Place FCV-IRZ00-0632 into the “OPEN” position

5.8 Place PMP-IRZ00-0644 into “AUTO” to begin the transfer

5.9 Visually inspect the lines for signs of leaks

5.10 During the pumping operation, the operator must stay in the load control area and the driver must stay by the trailer valve

5.11 Communicate with driver to ensure that truck is not loaded beyond legal limits

5.12 Once T-IRZ00-0623 is empty LT-IRZ00-0658 will initiate the programmable logic controller to do the following

5.13 FCV-IRZ00-0632 will close

5.14 PMP-IRZ00-0644 will automatically shutoff

5.15 Place transfer pump PMP-IRZ00-0644 into “OFF” to make sure it doesn’t turn on again in association with future CIP activities

5.16 Confirm that remedy-produced water line is not under pressure

5.17 Close load supply valve V-IRZ00-0626L

5.18 Have driver close the trailer valve

5.19 Select the “CIP TRANSFER” tab on the HMI to view the CIP process screen

5.20 Place FCV-IRZ00-0632 into the “CLOSE” position

6. Truck disconnection

6.1 Confirm that 5-gallon buckets are under hose connection points

6.2 Have driver open connection to truck (water will be in hose)

6.3 Have driver disconnect load-out hose from trailer valve

6.4 Disconnect load-out hose from the cam-lock coupling on the remedy-produced water line

6.5 Allow load-out hose to drain into 5-gallon buckets

6.6 Remove any adapters used

6.7 Have driver replace trailer valve cap or plug

6.8 Have driver close drip tray valve

6.9 Remove 5-gallon buckets from under connection points

6.10 Empty 5-gallon buckets into containment pad sump

6.11 Store equipment (hose, adapters, buckets) properly

7. Shipping documentation preparation

7.1 Record the ending totalizer reading (FIT-IRZ00-0680A) on the shipping documentation and tablet

7.2 Confirm that appropriate forms are filled out and signed

7.3 Confirm that shipping documentation is complete and signed

7.4 Confirm that shipping documentation number is recorded

7.5 Provide driver with appropriate copies

8. Truck demobilization

8.1 Work with driver to inspect that truck is in safe condition

8.2 Confirm that hose, buckets, and other equipment have been removed from path of truck exiting the loading area

8.3 Unchock tires

8.4 Remind driver to stay under 5 mph while onsite

8.5 Instruct driver to exit the containment pad heading north

8.6 Spot driver out to the main road

9. Post-transfer system checks

    9.1 Select the “CIP TRANSFER” tab on the HMI to view the CIP process screen

        1. Check and record the new tank level on LT-IRZ00-0658 for T-IRZ00-0623 on the tablet
        2. Verify that actuated valve FCV-IRZ00-0632 is in the “CLOSE” position

    9.2 Valve check (* indicates IRZ00)

        1. Close manual valve/verify position
            a. V-*0626J
            b. V-*0626L
            c. V-*0626O

    9.3 Scan/file paperwork/shipping documentation

Standard Operating Procedure
PG&E Topock Groundwater Remedy
Operation and Maintenance Plan

Title: Cleaning and Maintenance of Instrumentation and Control Equipment

Number: Remedy-SOP-03_Rev1

Created Date: 1/6/2014

1 Background and Scope

Pacific Gas and Electric Company (PG&E) is implementing a groundwater remedy near the intersection of Park Moabi Road and Interstate 40, approximately 12 miles southeast of Needles, California at the PG&E Topock Compressor Station (TCS). The objective of this Standard Operating Procedure (SOP) is to describe when preventative maintenance (PM) may be needed for the In-situ Remediation Facility and Remedy-produced Water Conditioning Plant Instrumentation and Control (I&C) instruments (pH analyzer, conductivity analyzer, turbidity analyzer, low and high level switches, level transmitters, pressure switches, pressure gauges and transmitters, flow meters, and temperature sensors). Regular PM schedules are included in the SAP. Cleaning and calibration of I&C equipment should be conducted in accordance with the manufacturers' instruction manuals.

The objective of PM testing is to evaluate effectiveness of some of the key instruments. These can be performed while conducting a visual walk down of the plant. It is best to run these tests first thing in the morning and just before the shift ends.

If unsuitable I&C equipment conditions are observed at any time throughout the procedure, the operator should troubleshoot the piece of equipment with reference the manufacturer's instruction manual. If the conditions cannot be fixed, the operator should contact the Project Manager to determine how to proceed.

2 Drawing and Tag Numbers

- Freshwater Supply Wells, Instrumentation: I-01-01
- Remedy Freshwater Storage Tank, Instrumentation: I-02-01
- Freshwater Injection Wells, Instrumentation: I-02-02
- IRZ Carbon Amendment Building, Instrumentation: I-06-01 through I-06-04
- Influent Tanks 1 through 4, Instrumentation: I-11-01 through I-11-04
- Filter Systems, Instrumentation: I-12-01 and I-12-02
- Chemical Storage Tanks, Instrumentation: I-12-03 and I-12-04
- Liquid Phase Separators: I-12-05
- Conditioned Water Storage Tank Farm A Side, Instrumentation: I-14-01
- Freshwater B-Side Conditioned Water Storage Tank (TNK-RTP01-1410), Instrumentation: I-14-02

	I&C Equipment Tag Numbers								
Drawing Number	**pH Analyzer**	**Conductivity Analyzer**	**Turbidity Analyzer**	**Low and High Level Switches**	**Level Transmitters**	**Pressure Switches**	**Pressure Gauges and Transmitters**	**Flow Meters**	**Temperature Transmitters**
I-01-01	--	--	--	--	LT-0151	--	PIT-0161	FE/FIT-0171 FE/FIT-0172	--
I-02-01	--	--	--	LSH-0255 LSL-0255	LT-0256	--	--	FE/FIT-0273	--
I-02-02	--	--	--	LSH-0251 LSH-0253	LT-0252	--	PIT-0261 PIT-0262	FE/FIT-0271 FE/FIT-0272	--
I-06-01	--	--	--	--	--	--	PIT-0662 PIT-0663 PI-0660A PI-0660B PI-0660C PI-0660D	FE/FIT-0672 FE/FIT-0673 FE/FIT-0674 FE/FIT-0680	--
I-06-02	--	--	--	LSH-0650 LSH-0651 LSH-0653 LSH-0654 LSH-0657	LE/LT-0652	PSH-0665 PSH-0666 PSH-0667	--	FE/FIT-0671 FE/FIT-0675 FE/FIT-0676 FE/FIT-0681	TE/TT-0690
I-06-03	--	--	--	LSH-0655 LSH-0649	LE/LT-0659	PSH-0668	PIT-0661	FE/FIT-0677 FE/FIT-0678 FE/FIT-0679	
I-06-04	--	--	--	LSH-0647 LSH-0646	LE/LT-0658 LE/LT-0657 LE/LT-0656	PSH-0669A PSH-0669B PSH-0669C	PI-0660F PI-0660G PI-0660	FE/FIT-0680A FE/FIT-0680B FE/FIT-0680C	
I-11-01	AIT-1181/ AE-1181A	AIT-1181/ AE-1181B	AE-1182	LSH-1151 LSL-1151	LE/LIT-1152	--	PI-1161	FE/FIT-1171	--
I-11-02	AIT-1183/ AE-1183A	AIT-1183/ AE-1183B	AE-1184	LSH-1153 LSL-1153	LE/LIT-1154	--	PI-1162	--	--
I-11-03	AIT-1185/ AE-1185A	AIT-1185/ AE-1185B	AE-1186	LSH-1155 LSL-1155	LE/LIT-1153	--	PI-1163	--	--
I-11-04	AIT-1187/ AE-1187A	AIT-1187/ AE-1187B	AE-1188 AIT/AE-1189	LSH-1157 LSL-1157 LSH-1159	LE/LIT-1158	--	PI-1164, PI-1165	FE/FIT-1181	--
I-12-01	--	--	--	--	--	--	PI-1261 PI-1262 PDIT-1261 PDIT-1262 PDIT-1263 PDIT-1264	FE/FIT-1271 FE/FIT-1272	--
I-12-02	--	--	--	--	--	--	PI-1263 PI-1264 PDIT-1265 PDIT-1266 PDIT-1267 PDIT-1269	FE/FIT-1273	--
I-12-03	--	--	--	--	LIT/LE-1251	--	PI-1267 PI-1269 PI-1271	--	--

Drawing Number	I&C Equipment Tag Numbers								
	pH Analyzer	Conductivity Analyzer	Turbidity Analyzer	Low and High Level Switches	Level Transmitters	Pressure Switches	Pressure Gauges and Transmitters	Flow Meters	Temperature Transmitters
					LIT/LE-1252				
I-12-04	--	--	--	LSH-1255	LIT/LE-1253	--	PI-1272 PI-1265 PI-1266	--	--
I-12-05	--	--	--	LSH-1251 LSH-1252 LSH-1253	--	--	PI-1262 PI/PIT-1268 PI-1253	--	--
I-14-01	AIT-1481/ AE-1481A	AIT-1481/ AE-1481B	AIT-1481/ AE-1481C	LSH-1451 LSL-1451 LSH-1453 LSL-1453 LSH-1459	LIT/LE-1452 LIT/LE-1454	--	PI-1461 PI-1462 PI-1463	FE/FIT-1471 FE/FIT-1472	--
I-14-02	AIT-1482/ AE-1482A	AIT-1482/ AE-1482B	--	LSH-1452 LSL-1452 LSH-1454 LSH-1455	LT-1452 LI-1452	--	PI-1464 PI-1465	--	--

3 Equipment

- Appropriate personal protective equipment (PPE)
- I&C Equipment manufacturer's instruction manuals
- Lockout/tagout tags and lockout/tagout manual for I&C equipment
- For (1) pH/temperature probes:
  - Soft bristle toothbrush
  - 2 clean 1000 mL beakers
  - WINK solution
  - Clean towel for wiping metals shaft
  - Clean towel for drying equipment
  - pH buffer solutions (at least 2)
  - Spray bottle with deionized water
  - Handheld laboratory pH/temperature meter
- For (2) conductivity probes:
  - Soft bristle toothbrush
  - 1 clean 1000 mL beaker with DI water
  - 1 empty, clean 1000 mL beaker
  - Clean towel for wiping metals shaft
  - Clean towel for drying equipment
  - Conductivity calibration solutions (at least 2)
  - Spray bottle with deionized water
  - Handheld laboratory conductivity meter
- For (3) turbidity analyzer:
  - Soft bristle toothbrush
  - Clean 1000 mL beaker with DI water

  - Clean towel for wiping metals shaft
  - Clean towel for drying equipment
  - Turbidity calibration solutions (at least 2)
  - Spray bottle with deionized water
  - Handheld turbidity conductivity meter
- For (4) Low/High level probes:
  - Dry, clean towel
- For (6) Level transmitters:
  - If necessary: Dry, clean towel and/or cleaning agent
- For (15) pressure switches:
  - Soft bristle toothbrush
  - Dry, clean towel
  - Cleaning agent
- For (8) pressure transmitters:
  - Soft toothbrush
  - Dry, clean towel
  - Cleaning agent
- For (7) Flow transmitters:
  - Dry, clean towel
  - Cleaning agent
- For (2) Temperature transmitters:
  - Soft toothbrush
  - Dry, clean towel
  - Cleaning agent

4 Approach

The operator needs to be aware of the process parameters, as both pH and temperature may change during processing. Both may appear to drift due to ambient temperature changes.

Once a confidence in instruments is established, and process conditions are stable, calibration frequency can be determined. It is suggested readings be noted twice a shift. The following general guidance is provided, see SAP for actual PM schedule.

1. pH meters may require calibration as often as once a month, but at least once every three months. pH meter readings should be checked daily according to the procedure in Section 5. See SAP for actual PM schedule.
2. Conductivity meters may require calibration as often as once a month, but at least once every three months. Conductivity meter readings should be checked daily according to the procedure in Section 5. See SAP for actual PM schedule.
3. Turbidity meters may require calibration as often as once a month, but at least once every three months. Turbidity meter readings should be checked daily according to the procedure in Section 5. See SAP for actual PM schedule.

4. Low and high level switches in the influent tanks, conditioned water storage tanks, remedy freshwater storage tanks, liquid phase separators, and secondary containment should be checked periodically according to the procedure in Section 5. Low and high level switches may also be pulled and sent to the manufacturer for calibration. See SAP for actual PM schedule.
5. Level transmitters should be checked and calibrated annually, according to the procedure in Section 5. See SAP for actual PM schedule.
6. Pressure switches should be checked periodically according to the procedure in Section 5. See SAP for actual PM schedule.
7. Pressure gauges and transmitters should be checked periodically, according to the procedure in Section 5. Pressure gauges and transmitters should be pulled and sent to the manufacturer for calibration annually. See SAP for actual PM schedule.
8. Flow meters should be checked annually according to the procedure in Section 5. They are calibrated at the factory, and normally only require re-ranging in the field. Flow meters can be cleaned and flow meter seals can be replaced periodically, according to the procedure in Section 5. See SAP for actual PM schedule.
9. Temperature transmitters should be checked periodically according to the procedure in Section 8. See SAP for actual PM schedule.

5 Preventative Maintenance Procedures:

1. To check the accuracy of the pH/Temperature analyzers:
    1.1. Place the pH process output on “hold.”
    1.2. Extract the pH probe from process stream as follows (CAUTION: Probe may forcibly pop out. DO NOT stand in front of the meter):
        1.2.1. Completely loosen the first holding collar.
        1.2.2. Pull back pH probe assembly until the probe tip “clears” the isolation ball valve.
        1.2.3. Close the isolation ball valve.
        1.2.4. Open the lower drain tap then open the upper drain tap. Drain off excess process fluid into a catch basin.
        1.2.5. Completely loosen the second holding collar.
        1.2.6. Remove the pH probe assembly and both holding collars.
    1.3. Place the pH probe into WINK solution in a 1000 mL beaker. Let the pH probe soak.
    1.4. Brush off the sensor using a tooth brush or some other soft brush. Never use abrasive pads on the sensor.
    1.5. Inspect the probe for damage and cleanliness.
    1.6. If necessary, repair and/or further clean the probe in accordance with the manufacturer’s instruction manual.
    1.7. Wipe down the metal shaft with a clean towel so that the shaft is clean. You may use green scratch pad on metal shaft but be sure not to get on the sensor.
    1.8. Rinse the probe with DI water and then dry.
    1.9. If necessary, calibrate the pH meter:

1.9.1. Place the probe in “calibration” mode.

1.9.2. Calibrate the sensor with pH buffer in accordance with the manufacturer’s instruction manual. Use a two-point calibration, at minimum.

1.9.3. Return the pH/temperature meter to measurement mode.

1.10. Collect a sample of process water in the unused 1000 mL beaker. Measure the pH and temperature with the probe and note the readings.

1.11. Use the handheld laboratory pH/temperature meter to collect pH and temperature measurements of the same sample. The laboratory pH/temperature meter is calibrated frequently in accordance with SOP-L09_Rev01.

1.12. If the difference in pH between the process probe and lab instrument is greater than 0.2 pH units:

1.12.1. Inspect both the process probe and the laboratory probe for damages and cleanliness

1.12.2. Place the process probe in “calibration” mode.

1.12.3. Calibrate the process probe in accordance with the manufacturer’s instruction manual, using a two-point calibration, at minimum.

1.12.4. Return the pH/temperature meter to “measurement” mode.

1.12.5. Collect a sample of process water. Measure the pH and temperature with both the process probe and laboratory meter and note the readings.

1.12.6. If the difference in pH between the two probes is still greater than 0.2, troubleshoot the process pH/temperature probe using the manufacturer’s instruction manual.

1.13. After the probe is accurately cleaned and calibrated, rinse the probe with deionized water and replace the process probe.

1.14. Ensure the pH/temperature meter is in “measurement” mode.

1.15. Release the hold on the process probe at the pH transmitter.

2. To check the accuracy of the conductivity analyzers:

2.1. Place the conductivity process output in “hold”.

2.2. Extract the conductivity probe from process stream as follows (CAUTION: Probe may forcibly pop out. DO NOT stand in front of the compression nut.):

2.2.1. Carefully loosen compression nut.

2.2.2. Retract the probe.

2.2.3. Close the isolation valve.

2.2.4. Drain the probe chamber into the bucket.

2.2.5. Slide back the compression not and loosen the retaining nut.

2.2.6. Extract the conductivity probe.

2.3. Place the probe into a 1000 mL beaker filled with DI water.

2.4. Brush off the sensor using a tooth brush or some other soft brush. Never use abrasive pads on the sensor.

2.5. Inspect the probe for damage and cleanliness.

2.6. If necessary, repair and/or further clean the probe in accordance with the manufacturer's instruction manual.

2.7. Wipe down the metal shaft with a clean towel so that the shaft is clean. You may use green scratch pad on metal shaft but be sure not to get on the sensor.

2.8. Rinse the probe with DI water and then dry.

2.9. If necessary, calibrate the conductivity meter:

2.9.1. Place the probe in "calibration" mode.

2.9.2. Calibrate the sensor with conductivity buffer in accordance with the manufacturer's instruction manual. Use a two-point calibration, at minimum.

2.9.3. Return the conductivity meter to measurement mode.

2.10. Measure the conductivity of the probe in the air. The reading in the air should be 0.0.

2.11. Collect a sample of process water in the unused 1000 mL beaker. Measure the pH and temperature with the probe and note the readings.

2.12. Use the handheld laboratory conductivity meter to collect pH and temperature measurements of the same sample. The laboratory conductivity meter is calibrated frequently in accordance with SOP-L04_Rev01.

2.13. If the reading for conductivity in the air is greater than 0.0 and/or the difference in conductivity readings between the process probe and lab instruments is greater than 10%:

2.13.1. Inspect the conductivity probe for damages and cleanliness.

2.13.2. Place the process probe in "calibration" mode.

2.13.3. Calibrate the process probe in accordance with the manufacturer's instruction manual, using a two-point calibration, at minimum.

2.13.4. Return the conductivity meter to "measurement" mode.

2.13.5. Measure the conductivity of the probe in the air.

2.13.6. Collect a sample of process water. Measure the conductivity with both the process probe and laboratory meter and note the readings.

2.13.7. If the reading for conductivity in the air is still greater than 0.0 and/or the difference in conductivity readings between the process probe and lab instruments is greater than 10%, troubleshoot the process conductivity probe using the manufacturer's instruction manual.

2.14. After the probe is accurately cleaned and calibrated, rinse the probe with deionized water and replace the conductivity probe in the process.

2.15. Ensure the conductivity meter is in "measurement" mode.

2.16. Release the hold on the process probe at the conductivity transmitter.

3. To check the accuracy of the turbidity analyzers:

3.1. Place the turbidity process output on "hold."

3.2. Flush and clean the turbidity analyzer in accordance with the manufacturer's instruction manual.

3.3. Inspect the turbidity analyzer for damage and cleanliness.

3.4. Clean the chamber in analyzer in accordance with the manufacturer's instruction manual.

3.5. Place the turbidity analyzer in "calibration" mode.

3.6. Calibrate the turbidity analyzer in accordance with the manufacturer's instruction manual. Use two turbidity standards, at minimum.

3.7. Return the turbidity analyzer to "measurement" mode.

3.8. Measure the turbidity of DI water and confirm that the analyzer reads 0.0 NTU.

3.9. If the reading for turbidity is greater than 0.250 NTU:

3.9.1. Inspect the turbidity analyzer for damages and cleanliness.

3.9.2. Place the process probe in "calibration" mode.

3.9.3. Recalibrate the turbidity analyzer in accordance with the manufacturer's instruction manuals.

3.9.4. Measure the turbidity of DI water and confirm that the analyzer reads 0.0 NTU.

3.9.5. If the reading for turbidity is still greater than 0.250 NTU, troubleshoot the turbidity probe using the manufacturer's instruction manual.

3.10. After the meter is accurately cleaned and calibrated, rinse the chambers with deionized water and replace the turbidity probe in the process.

3.11. Ensure the turbidity meter is in "measurement" mode.

3.12. Release the hold on the process probe at the turbidity transmitter.

4. To inspect the low and/or high level switches in the influent tanks, conditioned water storage tanks, remedy freshwater storage tanks, liquid phase separators, and secondary containment.

4.1. Influent Tanks and Conditioned Water Storage Tanks:

4.1.1. To inspect/maintain the high level switch:

4.1.1.1 Bypass the tank using the HMI in accordance with the respective lock-out/tag-out procedure.

4.1.1.2 Carefully open the lid of the tank. Do not break the plane of the tank with any body part.

4.1.1.3 Visually inspect that there is no breakage, condensation, heavy dust or spider webs on high level switch sensor.

4.1.1.4 If the sensor of the high level switch is tarnished, carefully remove the high level switch from the tank.

4.1.1.5 Wipe down the sensor with a dry, clean towel. If necessary, further clean the level switch in accordance with the manufacturer's instruction manual.

4.1.1.6 Reinstall the high level switch.

4.1.1.7 Remove the lock-out/tag-out on the tank.

4.1.2. To inspect/maintain the low level switch:

4.1.2.1 Inspect the switch after a tank empty cycle and prior to a scheduled tank fill cycle (See Backwashing Schedule)

4.1.2.2 Bypass the tank using the HMI in accordance with the respective lock-out/tag-out procedure.

4.1.2.3 If necessary, open the drain on the bottom of each tank such that the level is lowered below the process tap of the probe.

4.1.2.4 Carefully remove the probe and inspect for a build-up on the probe.

4.1.2.5 Wipe down the sensor with a dry, clean towel. If necessary, further clean the level switch in accordance with the manufacturer's instruction manual.

4.1.2.6 Reinstall the low level switch.

4.1.2.7 Remove the lock-out/tag-out on the tank.

4.2. Conditioned Water Storage Tank (B-Side):

4.2.1. To inspect/maintain the high level switch:

4.2.1.1 Bypass the tank using the HMI in accordance with the respective lock-out/tag-out procedure.

4.2.1.2 Carefully open the lid of the tank. Do not break the plane of the tank with any body part.

4.2.1.3 Visually inspect that there is no breakage, condensation, heavy dust or spider webs on high level switch sensor.

4.2.1.4 If the sensor of the high level switch is tarnished, carefully remove the high level switch from the tank.

4.2.1.5 Wipe down the sensor with a dry, clean towel. If necessary, further clean the level switch in accordance with the manufacturer's instruction manual.

4.2.1.6 Reinstall the high level switch.

4.2.1.7 Remove the lock-out/tag-out on the tank.

4.2.2. To inspect/maintain the low level switch:

4.2.2.1 Inspect the switch after a tank empty cycle and prior to a scheduled tank fill cycle.

4.2.2.2 Bypass the tank using the HMI in accordance with the respective lock-out/tag-out procedure.

4.2.2.3 If necessary, open the drain on the bottom of each tank such that the level is lowered below the process tap of the probe.

4.2.2.4 Carefully remove the probe and inspect for a build-up on the probe.

4.2.2.5 Wipe down the sensor with a dry, clean towel. If necessary, further clean the level switch in accordance with the manufacturer's instruction manual.

4.2.2.6 Reinstall the low level switch.

4.2.2.7 Remove the lock-out/tag-out on the tank.

4.3. Remedy Freshwater Storage Tank:

4.3.1. To inspect/maintain the high level switch:

4.3.1.1 Bypass the tank using the HMI in accordance with the respective lock-out/tag-out procedure.

4.3.1.2 Carefully open the lid of the tank. Do not break the plane of the tank with any body part.

4.3.1.3 Visually inspect that there is no breakage, condensation, heavy dust or spider webs on high level switch sensor.

4.3.1.4 If the sensor of the high level switch is tarnished, carefully remove the high level switch from the tank.

4.3.1.5 Wipe down the sensor with a dry, clean towel. If necessary, further clean the level switch in accordance with the manufacturer's instruction manual.

4.3.1.6 Reinstall the high level switch.

4.3.1.7 Remove the lock-out/tag-out on the tank.

4.3.2. To inspect/maintain the low level switch:

4.3.2.1 Inspect the switch after a tank empty cycle and prior to a scheduled tank fill cycle.

4.3.2.2 Bypass the tank using the HMI in accordance with the respective lock-out/tag-out procedure.

4.3.2.3 If necessary, open the drain on the bottom of each tank such that the level is lowered below the process tap of the probe.

4.3.2.4 Carefully remove the probe and inspect for a build-up on the probe.

4.3.2.5 Wipe down the sensor with a dry, clean towel. If necessary, further clean the level switch in accordance with the manufacturer's instruction manual.

4.3.2.6 Reinstall the low level switch.

4.3.2.7 Remove the lock-out/tag-out on the tank.

4.4. Liquid phase separators (high level switch only):

4.4.1. Bypass the liquid-phase separator using the HMI in accordance with the respective lock-out/tag-out procedure.

4.4.2. Carefully open the lid of the liquid-phase separator. Do not break the plane of the tank with any body part.

4.4.3. Visually inspect that there is no breakage, condensation, heavy dust or spider webs on high level switch sensor.

4.4.4. If the sensor of the high level switch is tarnished, carefully remove the high level switch from the tank.

4.4.5. Wipe down the sensor with a dry, clean towel. If necessary, further clean the level switch in accordance with the manufacturer's instruction manual.

4.4.6. Reinstall the high level switch.

4.4.7. Remove the lock-out/tag-out on the liquid-phase separator.

4.5. Secondary containment (high level switch only):

4.5.1. Visually inspect that there is no breakage, condensation, heavy dust or spider webs on high level switch sensor.

4.5.2. If the sensor of the high level switch is tarnished, carefully remove the high level switch.

4.5.3. Wipe down the sensor with a dry, clean towel. If necessary, further clean the level switch in accordance with the manufacturer's instruction manual.

4.5.4. Reinstall the high level switch.

5. Level Transmitters on the influent tanks, chemical storage tanks and conditioned water storage tanks:

5.1. To inspect/maintain the level transmitters:

5.1.1. Carefully remove the level transmitter from the tank.

5.1.2. Visually inspect the transmitter face for damage and cleanliness.

5.1.3. If necessary, wipe down the transmitter face with a dry, clean towel, and /or further clean the level switch in accordance with the manufacturer's instruction manual.

5.1.4. Reinstall the level transmitter.

5.1.5. Check that the wiring is in good condition.

5.2. To calibrate level transmitters:

5.2.1. Measured distance from the probe head face, less 6", to a target within the range of the transmitter. Accuracy has been shown to be within ¼".

5.2.2. If accuracy is less than ¼", troubleshoot the level transmitter in accordance with the manufacturer's instruction manual.

6. Pressure switches:

6.1. Pre-inspection:

6.1.1. Confirm that the cover is closed.

6.1.2. Visually inspect for:

6.1.2.1 Damage to the housing.

6.1.2.2 Leakage of process media.

6.1.3. If necessary, wipe down the cover and housing with a dry, clean towel.

6.2. Preparatory activities:

6.2.1. Bypass the pressure switch using the HMI and lock-out/tag-out protocol.

6.2.2. Confirm that the line is not under pressure on HMI and visually at system, as applicable.

6.2.3. Drain and evacuate the line.

6.3. Inspection:

6.3.1. Demount the switch using a suitable tool per the manufacturer's instruction manual.

6.3.2. Clean switch using dry, clean towel and cleaning solvent per manufacturer's instruction manual.

6.3.3. Visually inspect for:

6.3.3.1 Corrosion at process connections or diaphragm.

6.3.3.2 Bent, worn, or otherwise damaged components.

6.3.3.3 Damage to wiring.

6.3.4. Perform any other maintenance checks/procedures recommended by the manufacturer.

6.3.5. Reinstall the switch.

6.3.6. Remove the lock-out/tag-out.

6.3.7. Use the HMI to restore flow, as appropriate.

7. Pressure gauges and transmitters:

7.1. Periodically inspect the pressure gauges for:

7.1.1. Erratic or random pointer motion.

7.1.2. Readings that are suspect.

7.1.3. Leakage of gauge fill.

7.1.4. Case damage, dents, and/or cracks.

7.1.5. Any signs of service media leakage through the gauge including its connection.

7.1.6. Discoloration of gauge fill that impedes readability.

8. Flow Transmitters:

8.1. To clean the exterior of the flow meter, wipe it down with a cleaning agent specified by the manufacturer and a dry, clean towel. Do not use high pressure steam.

8.2. To check the accuracy of the flow meter readings, the follow procedures may be followed. Measuring and testing devices offered by the manufacturer may also be used in accordance with the manufacturer's recommendation:

8.2.1. FE/FIT/FM-RTP01-1171: Flow meter can be checked by filling an influent tank (TNK-RTP01-1101, TNK-RTP01-1102, TNK-RTP01-1103, TNK-RTP0-1104), noting starting level and ending level on the HMI for a predetermined time, and converting cubic feet to gallons. The influent tank being tested should not go into the empty cycle during the predetermined time interval.

8.2.2. FE/FIT/FM-RTP01-1271: Flow meter can be checked by filling the conditioned water storage tank (TNK-RTP01-1401, TNK-RTP01-1402), noting starting level and ending level on the HMI for a predetermined time, and converting cubic feet to gallons. Water should not be flowing from conditioned water storage tank being tested during the predetermined time interval.

8.2.3. FE/FIT/FM-RTP01-1273: Flow meter can be checked by filling the conditioned water storage tank (TNK-RTP01-1410), noting starting level and ending level on the HMI for a predetermined time, and converting cubic feet to gallons. Water should not be flowing from TNK-RTP01-1410 during the predetermined time interval.

8.2.4. FE/FIT/FM-1471: Flow meter can be checked using a drawdown method in the A-side conditioned water storage tank (s) (TNK-RTP01-1401, TNK-RTP01-1402, TNK-RTP01-1403, TNK-RTP01-1404), noting starting level and ending level on the HMI for a predetermined time, and converting cubic feet to gallons. Flow should not be entering the conditioned water storage tank being tested during the predetermined time interval.

9. Temperature Transmitters:

9.1. Pre-inspection:

9.1.1. Visually inspect for:

9.1.1.1 Damage to the housing.

9.1.1.2 Leakage of process media.

9.1.2. If necessary, wipe down the cover and housing with a dry, clean towel.

9.2. Preparatory activities:

9.2.1. Bypass the temperature transmitter using the HMI and lock-out/tag-out protocol.

9.2.2. Confirm that the line is not under pressure on HMI and visually at system, as applicable.

9.2.3. Drain and evacuate the line.

9.3. Inspection:

9.3.1. Demount the transmitter using a suitable tool per the manufacturer's instruction manual.

9.3.2. Clean transmitter using dry, clean towel and cleaning solvent per manufacturer's instruction manual.

9.3.3. Visually inspect for:

9.3.3.1 Corrosion at process connections.

9.3.3.2 Bent, worn, or otherwise damaged components.

9.3.3.3 Damage to wiring.

9.3.4. Perform any other maintenance checks/procedures recommended by the manufacturer.

9.3.5. Reinstall the transmitter.

9.3.6. Remove the lock-out/tag-out.

9.3.7. Use the HMI to restore flow, as appropriate.

Standard Operating Procedure
PG&E Topock Groundwater Remedy
Operation and Maintenance Plan

Title: Maintenance of Aboveground Pumps

Number: Remedy-SOP-04_Rev1

Created Date: 4/21/2014

1 Background and Scope

Pacific Gas and Electric Company (PG&E) is implementing a groundwater remedy near the intersection of Park Moabi Road and Interstate 40, approximately 12 miles southeast of Needles, California at the PG&E Topock Compressor Station (TCS).

The objective of this Standard Operating Procedure (SOP) is to describe preventative maintenance (PM) for aboveground (centrifugal, chemical metering, solids, and sump) pumps. The objective of PM checks and procedures are to maintain functionality and minimize downtime of the aboveground pumps. PM can be performed while conducting a visual walk down of the plant.

CAUTION: Chemical in metering pumps may cause personal harm if procedures are not followed properly.

If unsuitable pump equipment conditions are observed at any time throughout the procedure, the operator should troubleshoot the piece of equipment per the manufacturer's instruction manual. If the conditions cannot be fixed, the operator should contact the Maintenance Supervisor to determine how to proceed.

2 Drawing and Aboveground Pump Equipment Tag Numbers

- Influent Tanks 1 through 4, Instrumentation: I-11-01 through I-11-04
- Filter Systems, Instrumentation: I-12-01 and I-12-02
- Chemical Storage Tanks, Instrumentation: I-12-03 and I-12-04
- Liquid Phase Separators: I-12-05
- Conditioned Water Storage Tank Farm A Side, Instrumentation: I-14-01
- Freshwater B-Side Conditioned Water Storage Tank (TNK-RTP01-1410), Instrumentation: I-14-02
- IRZ Carbon Amendment Building P&ID: I-06-01 through I-06-04

Drawing Numbers	Pump Tag Number	Pump Location	Pump Description
Peristaltic Hose Pumps			
I-06-02	PMP-0640	IRZ Carbon Amendment	MW-20 Bench Carbon Amendment Bldg - Carbon Substrate Hose Pump
I-06-02	PMP-0641	IRZ Carbon Amendment	MW-20 Bench Carbon Amendment Bldg - Carbon Substrate Hose Pump
I-06-02	PMP-0642	IRZ Carbon Amendment	MW-20 Bench Carbon Amendment Bldg - Carbon Substrate Hose Pump
I-06-03	PMP-0643	IRZ Well Maintenance	MW-20 Bench Carbon Amendment Bldg - Well Maintenance Reagent Hose Pump
Centrifugal Pumps			
I-06-01	PMP-0610	IRZ Carbon Amendment	MW-20 Bench Carbon Amendment Bldg - Booster Pump
I-06-01	PMP-0611	IRZ Carbon Amendment	MW-20 Bench Carbon Amendment Bldg - Booster Pump
I-06-04	PMP-0644	IRZ Well Maintenance	MW-20 Bench Carbon Amendment Bldg - Clean-In-Place Reagent Pump
I-06-04	PMP-0645	IRZ Well Maintenance	MW-20 Bench Carbon Amendment Bldg - Produced Water Transfer Pump
I-06-04	PMP-0648	IRZ Well Maintenance	MW-20 Bench Carbon Amendment Bldg - Conditioned Water Injection Pump
I-11-01	PMP-1101	Remedy-produced Water Conditioning Plant	Influent Tank Recirculation Pump 1
I-11-02	PMP-1102	Remedy-produced Water Conditioning Plant	Influent Tank Recirculation Pump 2
I-11-03	PMP-1103	Remedy-produced Water Conditioning Plant	Influent Tank Recirculation Pump 3
I-11-04	PMP-1104	Remedy-produced Water Conditioning Plant	Influent Tank Recirculation Pump 4
I-12-01	PMP-1210	Remedy-produced Water Conditioning Plant	Filter Feed Pump 1
I-12-01	PMP-1220	Remedy-produced Water Conditioning Plant	Filter Feed Pump 2
I-12-02	PMP-1230	Remedy-produced Water Conditioning Plant	Filter Feed Pump 3
I-12-02	PMP-1240	Remedy-produced Water Conditioning Plant	Filter Feed Pump 4
I-14-01	PMP-1405	Remedy-produced Water Conditioning Plant	Conditioned Water Transfer Pump 1
I-14-01	PMP-1406	Remedy-produced Water Conditioning Plant	Conditioned Water Transfer Pump 2
Chemical Metering Pumps			
I-12-03	PMP-1211	Remedy-produced Water Conditioning Plant	Caustic Feed Pump 1

Drawing Numbers	Pump Tag Number	Pump Location	Pump Description
I-12-03	PMP-1212	Remedy-produced Water Conditioning Plant	Caustic Feed Pump 2
I-12-03	PMP-1221	Remedy-produced Water Conditioning Plant	Coagulant Feed Pump 1
I-12-03	PMP-1222	Remedy-produced Water Conditioning Plant	Coagulant Feed Pump 2
I-12-04	PMP-1231	Remedy-produced Water Conditioning Plant	Acid Feed Pump 1
I-12-04	PMP-1232	Remedy-produced Water Conditioning Plant	Acid Feed Pump 2
Solids Pump			
I-12-05	PMP-1201	Remedy-produced Water Conditioning Plant	Solids Pump
Sump Pumps			
I-06-04	PMP-0646	IRZ Well Maintenance	MW-20 Bench Carbon Amendment Bldg - IRZ Well Maintenance Room Sump Pump
I-06-02	PMP-0647	MW-20 Bench Decon Pad	MW-20 Bench Carbon Amendment Bldg - Truck Offload Sump Pump
I-11-04	PMP-1105	Remedy-produced Water Conditioning Plant	Influent Tank Farm Sump Pump
I-12-04	PMP-1207	Remedy-produced Water Conditioning Plant	Remedy-produced Water Conditioning Plant Sump Pump
I-12-05	PMP-1208	Remedy-produced Water Conditioning Plant	Liquid Phase Separator Sump Pump
I-14-01	PMP-1407	Remedy-produced Water Conditioning Plant	Conditioned Water Tank Farm Sump Pump
I-14-02	PMP-1403	Remedy-produced Water Conditioning Plant	TCS Truck Fill Pump
I-14-02	PMP-1408	Remedy-produced Water Conditioning Plant	Decon Pad Sump Pump

3 Equipment List

- Appropriate PPE
- Health and Safety Plan
- Manufacturer's operation and maintenance manuals
- Dry towel
- For (1) peristaltic hose pumps:
    - Appropriate cleaning supplies, replacement parts (see manufacturer's instruction manual)
- For (2) centrifugal pumps:

- Appropriate cleaning supplies, lubricants, replacement parts (see manufacturer's instruction manual)

- For (3) chemical metering pumps:
  - Appropriate cleaning supplies, replacement parts, if necessary (see manufacturer's instruction manual)

4 Preventative Maintenance Procedures

Scheduled inspection, cleaning and maintenance of aboveground pumps and related equipment should be conducted in accordance with the manufacturers' instruction manuals. Inspections and maintenance protocols may include, but are not limited to, the following:

1. Peristaltic Hose Pumps

   1.1. Visually inspect that electrical connections are in secure and show no signs of wear.

      a) Note any signs of rust or wear.

   1.2. Check that the pump is securely mounted.

      a) Secure pump if it is loose.

   1.3. Visually inspect the pump for signs of corrosion.

      a) Clean the pump to determine if corrosion is bad enough to require part replacement.

   1.4. Visually inspect the condition of the flexible tubing.

      a) Note any signs of excessive wear.

         1) Replace the tubing if it is damaged.

      b) Visually inspect the connection between the pipe and flexible tubing.

         1) Secure tubing to pipe if it is loose.

         2) Secure the connection if it is loose.

   1.5. Check that there is no extra noise/clicking coming from pump.

      a) Note any noise and troubleshoot per the manufacturer's instructions.

   1.6. Check that the discharge pressure is within the specified parameters in the operations and maintenance (O&M) manual.

   1.7. Wipe off excessive dust from the outside of the pump with a dry towel.

   1.8. Contact the Maintenance Supervisor if there are any notes that indicate further maintenance is required so parts can be procured and work can be scheduled.

2. Centrifugal Pumps

   2.1. Visually inspect that electrical connections are in good condition.

      a) Note any signs of rust or wear.

   2.2. Check that the base plate nuts and bolts are adequately tightened.

      a) Tighten bolts if they are loose.

   2.3. Check that tie down straps are in place and adequately secured.

      a) Secure tie down straps if they are loose.

2.4. Check stuffing box for leakage with packing.

a) Note any leaks and overall condition of packing.

b) Replace packing if needed.

2.5. Check stuffing box for no leakage with mechanical seals.

a) Note any leaks and overall condition of seals.

b) Replace seals if needed.

2.6. Check for excessive noise, vibrations and oil temperatures.

a) Troubleshoot, if necessary, in accordance with the manufacturer's instructions.

2.7. Check that the discharge pressure is within the specified parameters in the O&M manual.

2.8. Check lubrication to the pump, motor, and driver bearing. Lubricate at the frequency recommended by the manufacturer's instructions. Lubricate in accordance with the manufacturer's instructions.

a) Clean the Zerk fittings prior to lubrication.

b) Lubricate the pump per the manufacturer's specification and schedule.

c) Clean the Zerk fittings following lubrication.

2.9. Check that there is no leakage around the cooling system.

a) Note any leaks, and troubleshoot leaks per the manufacturer's instructions.

2.10. Wipe off excessive dust from the outside of the pump with a dry towel.

2.11. Check that the safety guards on the shafts are in place and adequately secured.

a) Tighten safety guards if they are loose.

2.12. Perform any other maintenance checks/procedures as recommended by the manufacturer.

2.13. Contact the Maintenance Supervisor if there are any notes that indicate further maintenance is required so parts can be procured and work can be scheduled.

3. Chemical metering pumps

CAUTION: Chemicals in the metering pumps may cause personal harm if procedures aren't followed properly. Refer to the Health and Safety Plan for proper safety practices and management of hazardous materials while conducting the following procedure.

3.1. Visually inspect that electrical connections are in good condition.

a) Note any signs of rust or wear.

3.2. Check that the pump is securely mounted.

a) Secure pump if it is loose.

3.3. Visually inspect the pump for signs of corrosion.

3.4. Check that the screen and controls are readable.

a) Clean screen if needed.

b) Record settings.

3.5. Check that the tubing connection and coupling nut are secure.

a) Secure tubing connection and coupling nut if needed.

3.6. Check that there are no leaks in the tubing and the tubing ends are not worn.

a) Note any leaks and signs of wear.

b) Shutdown the system if a leak is noted and notify the Maintenance Supervisor.

3.7. Check that the valves on the pump are appropriately positioned and functioning.

a) Adjust valves if needed.

b) Note any valves that are not functioning properly. Troubleshoot valves per manufacturer's instructions.

3.8. Replace the Liquifram (diaphragm) per the method and frequency recommended in manufacturer's instructions.

3.9. Replace the cartridge valves, seal rings/valve balls, and injection check valve spring per the method and frequency recommended in manufacturer's instructions.

3.10. Check that there is no extra noise/clicking coming from pump.

a) Note any extra noise/clicking and troubleshoot per the manufacturer's instructions.

3.11. Check that the discharge pressure is within the specified parameters in the O&M manual.

3.12. Wipe off excessive dust from the outside of the pump with a dry towel.

3.13. Perform any other maintenance checks/procedures recommended by the manufacturer's instructions.

3.14. Contact the Maintenance Supervisor if there are any notes that indicate further maintenance is required so parts can be procured and work can be scheduled.

4. Solids pumps

4.1. Check that the pump is securely mounted.

a) Secure pump if it is loose.

4.2. Check the condition of the solenoid air valve assembly (air valve body, coil and terminal connector). If any part of the solenoid valve assembly (air valve body, coil or terminal connector) is in poor condition, it should be replaced. If air continually blows out the exhaust in very large quantities, the air valve seals may be worn beyond their ability to function and should be replaced.

4.3. Check the ball check valve.

a) Troubleshoot per the method recommended in manufacturer's instruction manual.

4.4. Check to make sure that all suction connections are air tight, and that the clamp bands are properly tightened.

a) Tighten any loose connections.

4.5. Check for excessive moisture in compressed air line.

a) Note any excessive moisture.

4.6. Check for cracks and damage on the body of the pump.

a) Note any cracks and damage

4.7. Check that the discharge pressure is within the specified parameters in the O&M manual.

4.8. Perform any other maintenance checks/procedures recommended by the manufacturer's instructions.

4.9. Contact the Maintenance Supervisor if there are any notes that indicate further maintenance is required so parts can be procured and work can be scheduled.

5. Sump Pumps

5.1. Visually inspect that electrical connections are in good condition.

a) Note any signs of rust or wear.

5.2. Check that the pump is securely mounted.

a) Secure pump if it is loose.

5.3. Check the sump for debris. Clear the debris prior to operating the sump.

5.4. Operate the pump if it isn't already running.

a) If the pump is not running raise the float to operate the pump.

5.5. Check that there is no extra noise/clicking coming from pump.

a) Note any noise and troubleshoot per the manufacturer's instructions.

5.6. Check that the discharge pressure is within the specified parameters in the O&M manual (maintenance to be performed when liquid is present in the sump).

5.7. Verify that the pump turns off when the sump volume has been emptied (maintenance to be performed when liquid is present in the sump).

Standard Operating Procedure
PG&E Topock Groundwater Remedy
Operation and Maintenance Plan

Title: Cleaning and Maintenance of Valves and Flow Control Equipment

Number: Remedy-SOP-05_Rev1

Creation Date: 9/8/2014

1 Background and Scope

Pacific Gas and Electric Company (PG&E) is implementing a groundwater remedy near the intersection of Park Moabi Road and Interstate 40, approximately 12 miles southeast of Needles, California at the PG&E Topock Compressor Station (TCS).

The objective of this Standard Operating Procedure (SOP) is to describe general procedures for cleaning and corrective maintenance of valves and flow control equipment associated with the groundwater remedy systems. The goals of corrective maintenance are to respond to early signs of potential failure/unsuitable conditions and to restore the equipment to proper functionality while minimizing downtime. Unsuitable conditions are identified during routine system inspections and include, but are not limited to, pressure buildup at valves, locking up of moving/revolving pieces, and evidence of flow downstream of valves when valves are closed.

If the procedures specified herein fail to rectify the unsuitable condition, the operator should contact the Maintenance Supervisor to determine how to proceed.

2 Drawing Numbers

- P&ID Fresh Water Supply Wells: I-01-01
- P&ID Fresh Water Remedy Tank: I-02-01
- P&ID Fresh Water Injection Well: I-02-02
- TCS Loop Extraction and Injection Wells P&ID: I-03-01 through I-03-03
- NTH IRZ Extraction Wells P&ID: I-04-01 and I-04-02
- South NTH IRZ Injection Wells P&ID: I-04-03 and I-04-04
- North NTH IRZ Injection Wells P&ID: I-04-05 and I-04-06
- River Bank Extraction and Upland Injection Wells P&ID: I-05-01 through I-05-03
- MW-20 Bench Carbon Amendment Building P&ID: I-06-01 through I-06-04
- P&ID Influent Tanks 1 through 4: I-11-01 through I-11-04

- P&ID Filter System A Side: I-12-01
- P&ID Filter System B Side: I-12-02
- P&ID Caustic and Coagulant System: I-12-03
- P&ID Acid and Dewatering Aid Feed Systems: I-12-04
- P&ID Liquid Phase Separator & Air Compressor: I-12-05
- P&ID Conditioned Water Storage Tank Farm A Side: I-14-01
- P&ID Conditioned Water Storage Tank B Side: I-14-02

3 Equipment

- Appropriate personal protective equipment (PPE)
- Health and Safety Plan
- Manufacturer's instruction manuals
- Lockout/tagout manual and tags
- Container (5-gallon bucket, or similar, with lid)
- Tools – wrench set/pliers, others per manufacturer's instruction manual
- Pipe dope or thread seal tape
- Dry cloth
- Appropriate cleaning supplies per manufacturer's instruction manual
- Appropriate replacement parts per manufacturer's instruction manual
- Spill kit

4 Procedure

Inspection, cleaning, and maintenance of valves and other flow control equipment should be conducted on an as needed basis in response to unsuitable conditions observed during routine system inspections. Corrective maintenance procedures may include, but are not limited to, the following:

1. Preparatory Activities
    - 1.1 Verify location of problematic component on piping and instrumentation diagram (P&ID)
    - 1.2 Use the human machine interface (HMI) to stop the flow to or from the respective extraction well
    - 1.3 Lockout/tagout the junction box to the extraction well
    - 1.4 Lockout/tagout valves to the component/line to isolate from system pressure
    - 1.5 Confirm that line is not under pressure on HMI
    - 1.6 Visually verify pressure at the equipment on the gauges, as applicable

CAUTION: If working with lines containing ethanol, maintenance reagents, or other potentially hazardous substances, don the appropriate PPE and ensure that appropriate safety equipment is in place.

1.7 Drain and evacuate the line into a container

1.8 Dispose of evacuated liquid into sump

1.9 Clean up any spills immediately

2. Inspection

2.1 Remove component using appropriately-sized tool (wrench/pliers)

2.2 Inspect component and immediately adjacent piping for fouling, solids accumulation, or other obstructions

2.3 Disassemble component using appropriate tools per manufacturer's instruction manual, if necessary

2.4 Inspect component parts for signs of corrosion, wear, or other damage

3. Maintenance

3.1 Remove any observed obstructions

3.2 Clean component per manufacturer's instruction manual

3.3 Clean any solids accumulation in the adjacent piping

3.4 Replace component (or component parts) per manufacturer's instruction manual if it is damaged or shows signs of excessive corrosion or wear

3.5 Perform any other maintenance checks/procedures recommended by the manufacturer

3.6 Reassemble component per manufacturer's instruction manual, if necessary

3.7 Replace component in line

1. Clean fittings using dry cloth
2. Use pipe dope and/or thread seal tape as necessary
3. Ensure that connection is tight

4. Testing

4.1 Remove lockout/tagout from the electrical junction box to the downstream pump

4.2 Remove lockout/tagout from upstream valves that were closed for isolation

4.3 Use the HMI to restore flow to or from the component

4.4 Check that there are no leaks at the replaced component

1. If a leak is observed, immediately stop flow to the component using the HMI

4.5 Check that unsuitable condition has been fixed

4.6 If the condition has not been fixed and/or requires further diagnosis, contact the Maintenance Supervisor for directions on how to proceed

Standard Operating Procedure
PG&E Topock Groundwater Remedy
Operation and Maintenance Plan

Title: Automatic Backwashing

Number: Remedy-SOP-06_Rev1

Creation Date: 9/8/2014

1 Background and Scope

Pacific Gas and Electric Company (PG&E) is implementing a groundwater remedy near the intersection of Park Moabi Road and Interstate 40, approximately 12 miles southeast of Needles, California at the PG&E Topock Compressor Station (TCS).

The objective of this Standard Operating Procedure (SOP) is to describe the procedure making changes to routine automatic backwashing of injection well selections. The procedure is automated once extraction pumps are placed in the "AUTO" position on the human machine interface (HMI). The procedures provided describe how to activate and deactivate backwashing pumps within injection wells. Once backwashed water is conveyed to Backwash Frac Tank TNK-IRZ00-0621, it will be pumped to the Remedy Produced Water Conditioning Plant. There are no procedures provided for transfer to the Remedy Produced Water Conditioning Plant given that it is an automated process based on TNK-IRZ00-0621 water levels transmitted by level transmitter LT-IRZ00-0657 that control PMP-IRZ00-0645 Produced Water Transfer Pump.

2 Drawing Numbers

- I-11-01 through I-11-04: P&ID Influent Tank 1 through 4
- I-06-04: IRZ Carbon Amendment Building P&ID Sheet 4 of 4

3 Equipment

- Appropriate PPE
- Health and Safety Plan

4 Procedure

1. Prefield Meeting
    1.1 Confirm with Maintenance Supervisor which injection and extraction wells are desired to operate
2. Pre-startup human machine interface (HMI) checks
    2.1 Check system alarm status on HMI
        2.1.1 Select "ALARMS" tab on HMI

2.1.2 Verify if any alarm conditions associated with the automatic backwashing equipment exist

1. Document any alarm conditions in the checklist if they exist
2. Troubleshoot alarms

2.1.3 Call Project Engineer or Maintenance Supervisor if alarms cannot be readily addressed

2.2 Confirm Remedy Produced Water Conditioning Plant influent tanks have sufficient capacity for additional water

2.2.1 Check influent tank levels

1. Influent tank TNK-RTP01-1101 level indicator transmitter LIT-RTP01-1152
2. Influent tank TNK-RTP01-1102 level indicator transmitter LIT-RTP01-1154
3. Influent tank TNK-RTP01-1103 level indicator transmitter LIT-RTP01-1153
4. Influent tank TNK-RTP01-1104 level indicator transmitter LIT-RTP01-1158

2.2.2 Backwashing cannot commence unless influent tank levels are below high level elevations

1. Influent tank TNK-RTP01-1101 level switch LSH-RTP01-1151
2. Influent tank TNK-RTP01-1102 level switch LSH-RTP01-1153
3. Influent tank TNK-RTP01-1103 level switch LSH-RTP01-1155
4. Influent tank TNK-RTP01-1104 level switch LSH-RTP01-1157

2.3 Select the “AUTOMATIC BACKWASH” tab on the HMI to view the National Trails Highway (NTH) In Situ Reactive Zone (IRZ) and Inner Recirculation Loop (IRL) injection well valve positions

2.3.1 Verify valve FV-IRZ00-0633 is in the “AUTO” position

2.3.2 Verify transfer pump PMP-IRZ00-0645 is in the “AUTO” position

2.3.3 To place the wells into automatic operation place desired extraction pumps to operate in “AUTO” position

2.3.4 To remove a well from automatic operation place desired extraction pumps in the “OFF” position

Standard Operating Procedure
PG&E Topock Groundwater Remedy
Operation and Maintenance Plan

Title: Secondary Containment Inspection and Maintenance at Buildings

Number: Remedy-SOP-07_Rev1

Creation Date: 4/9/2014

1 Background and Scope

Pacific Gas and Electric Company (PG&E) is implementing a groundwater remedy near the intersection of Park Moabi Road and Interstate 40, approximately 12 miles southeast of Needles, California at the PG&E Topock Compressor Station (TCS).

The objective of this Standard Operating Procedure (SOP) is to describe the procedure for inspection and maintenance of secondary containment at buildings at the MW-20 Bench and the Remedy-produced Water Conditioning Plant.

2 Drawing Numbers

- IRZ Carbon Amendment Building: I-06-01 through I-06-04
- Remedy-produced Water Conditioning Plant:
  - Secondary Containment for TCS/Remedy-Produced Water: G-10-01
  - Influent Tanks 1 through 4, Instrumentation: I-11-01 through I-11-04
  - Remedy-produced Water Conditioning Systems, Instrumentation: I-12-03 and I-12-04
  - Conditioned Water Storage Tanks and TCS Truck Fill Station, Instrumentation: I-14-01 and I-14-02

3 Equipment/Supplies

- Appropriate personal protective equipment (PPE)
- Health and Safety Plan
- Dry towel and cleaning agents, if necessary
- Possible equipment needed to clean up leaks includes but is not limited to:
  - Shop-vac
  - Spill containment
  - Spare sump pump
  - Extension cord
  - Tools and parts of fittings for repairing pipe
  - Tools and supplies for repairing concrete
  - Vac-truck

4 Procedure

1. Mobilize to the secondary containment area to be inspected. Secondary containment areas include the following:
    - IRZ Carbon Amendment Building:
        - MW-20 Bench Carbon Amendment Building System Containment
        - MW-20 Bench Frac Tank Containment
        - MW-20 Bench Truck Offload Sump
    - Remedy-produced Water Conditioning Plant:
        - Influent Tank Farm
        - First Floor of Remedy-produced Water Conditioning Plant Building
        - Conditioned Water Storage Tank Farm
        - TCS Truck Fill Station Decontamination Pad
2. Visually inspect the secondary containment area:
    - No liquid or solid accumulation
    - No unnecessary objects
    - Clear of large debris and fire hazards
    - No algae/fungi accumulation
    - No signs of cracks, leakage, corrosion
    - Integrity of concrete is adequate
    - Liquids/solids can properly drain to sump from any point
    - Area outside of the containment area is clean and free of liquid and solid accumulation
    - Floor grading integrity is adequate
3. Inspect the sump and piping into the sump:
    - No liquid or solid accumulation that cannot be pumped by sump pump
    - No signs of cracks, leakage, corrosion in sump and piping
    - No signs of distortions, buckling, denting, or bulging in sump and piping
    - Floor grading integrity is adequate
4. Inspect emergency equipment
    - Spill kits are accessible
    - Spill containment booms are accessible
    - Shop-vac is accessible
    - Spare sump pump is accessible
    - Extension cord is accessible
    - Tools and parts of fittings for repairing pipe are accessible

- Tools and supplies for repairing concrete are accessible
- Appropriate storage containers for containment of the materials generated during a spill response are accessible

5. If liquid/solid accumulation is present in the secondary containment, visually inspect the area to determine the source of the liquids/solids.

   5.1. If it is determined that the source of the liquids/solids is from a piece of process equipment, reference the appropriate SOP(s) to, if necessary, shut down the equipment and troubleshoot and/or repair the equipment.

      5.1.1 If further maintenance is necessary, contact the Maintenance Supervisor so parts can be procured and work can be scheduled.

   5.2. If it is suspected that the release is hazardous material (e.g., from visual inspection of area around storage containers, after review of liquid level trends, after review of inventory, etc.), reference the Hazardous Materials Business Plan (HMBP) for further direction on storing and handling hazardous materials, and contact the Maintenance Supervisor.

6. If the liquid/solid accumulation is present in the secondary containment area above the high level set point and the high level alarm and/or the sump pump did not initiate:

   6.1. If the sump pump did not engage automatically, trigger the high level float to attempt to engage the sump pump.

   6.2. If the sump pump is dysfunctional, remove the liquid/solid accumulation using the appropriate equipment (shop-vac, vac truck, spare sump pump, etc.). Refer to the Waste Management Plan (Section 6 of the O&M Plan for proper handling of the liquid/solid accumulation.

7. Troubleshoot/repair the dysfunctional equipment with reference to the appropriate SOP (see SOP Remedy-SOP-03 to troubleshoot the high level switch; see SOP Remedy-SOP-04 to troubleshoot the sump pump).After completion of inspection in one area of secondary containment, move to another area of secondary containment until all areas have been inspected, as necessary.

8. Contact the Maintenance Supervisor if there are any notes that indicate further maintenance is required so parts can be procured and work can be scheduled.

Standard Operating Procedure
PG&E Topock Groundwater Remedy
Operation and Maintenance Plan

Title: Inspection of Frac Tanks

Number: Remedy-SOP-08_Rev1

Revision Date: 5/19/2015

1 Background and Scope

Pacific Gas and Electric Company (PG&E) is implementing a groundwater remedy near the intersection of Park Moabi Road and Interstate 40, approximately 12 miles southeast of Needles, California at the PG&E Topock Compressor Station (TCS).

The objective of this Standard Operating Procedure (SOP) is to describe the procedure for inspection and maintenance of frac tanks at the MW-20 Bench (Tanks T-IRZ00-0601, -0619, -0620, -0621, and -0623), the Conditioned Water Storage Tank Farms (Tanks TNK-RTP01-1401 and -1402), and the Influent Tank Farm (Tanks TNK-RTP01-1101 to -1104).

The operator should not break the plane of the tank openings with body parts at any time during this procedure, as it would be considered confined space entry. If confined space entry is necessary for a special procedure, the Health and Safety Plan should be referenced.

2 Drawing Numbers

- MW-20 Bench Carbon Amendment Building: I-06-02 through I-06-04
- Remedy-Produced Water Conditioning Plant Influent Tank Farm: I-11-01 through I-11-04
- Remedy-Produced Water A-Side Conditioned Water Storage Tanks: I-14-01

3 Equipment/Supplies

- Appropriate personal protective equipment (PPE), including fall protection
- Health and Safety Plan
- Lockout/tagout tags and lockout/tagout manual for frac tank maintenance (if tank shutdown is performed)
- Portable/submersible pump or vac truck (if tank draining is performed)

4 Procedure

1. Inspect tanks and associated equipment with reference to the following instructions (Steps 2 through 12). If unsuitable tank conditions are observed at any time throughout the procedure:

    1.1. Reference the Hazardous Materials Business Plan (HMBP) if the tank contains hazardous materials (acid or caustic) to determine how the materials should be handled if the chemicals are discharged from the tank.

1.2. Shut down and/or drain the tank if it is warranted (e.g. the tank is in danger of a blow out or failure). Steps a through f below are procedures to shutdown and drain an individual frac tank (If more than one frac tank is to be shutdown and/or drained at the same time, special procedures are required):

a. Influent Tank Farm (TNK-RTP01-1101 through -1104), Shutdown Frac Tank

i. Lockout/tagout the frac tank by following instructions in the lockout/tagout manual.
ii. Use the HMI to turn OFF the tank's recirculation pump (PMP-RTP01-1101 for Influent Tank 1, PMP-RTP01-1102 for Influent Tank 2, PMP-RTP01-1103 for Influent Tank 3, PMP-RTP01-1104 for Influent Tank 4).
iii. Close the following manual valves upstream, downstream, and on the chemical recirculation line of the frac tank:
    1. Influent Tank 1: V-RTP01-1101A, -1101F, -1101G, -1101I, -1101K
    2. Influent Tank 2: V-RTP01-1102A, -1102F, -1102G, -1102I, -1102K
    3. Influent Tank 3: V-RTP01-1103A, -1103F, -1103G, -1103I, -1103K
    4. Influent Tank 4: V-RP01-1104A, -1104F, -1104G, -1104I, -1104K

b. Influent Tank Farm (TNK-RTP01-1101 through -1104), Drain Frac Tank

i. Use the HMI to verify that there is sufficient volume in the other influent tanks for the discharge from the influent tank being drained.
    - Proceed to next steps only if there is sufficient volume in the other influent tanks.
ii. Inspect the secondary containment per Remedy-SOP-07 (Secondary Containment Inspection and Maintenance at Buildings).
    - Proceed to next steps only if the secondary containment is in acceptable condition.
iii. Plug in the Influent Tank Farm sump pump (PMP-RTP01-1105).
iv. If the frac tank is not already shutdown, shutdown the frac tank by completing all steps listed for shutting down an Influent Tank Farm Frac Tank (see Step a above).
v. Slowly open the manual drain valve on the frac tank (V-RTP01-1101M for Influent Tank 1, V-RTP01-1102M for Influent Tank 2, V-RTP01-1103M for Influent Tank 3, V-RTP01-1104M for Influent Tank 4):
vi. Ensure that the tank discharge properly drains in the secondary containment to the sump pump.
    - If there is any malfunctioning of the secondary containment and/or sump pump, immediately close the manual drain valve that was opened in Step v.
vii. If the frac tank does not drain completely by gravity, pump out the remaining water using a portable pump or vac truck.
    - Drain the discharge into the influent tank farm sump (with the portable pump) OR haul to the influent tanks or liquid phase separator (with the vac truck).
viii. After the frac tank has completely drained, close the manual drain valve that was opened in Step v.
ix. After all discharge has been pumped from the sump, unplug the Influent Tank Farm Sump Pump (PMP-RTP01-1105).
x. If frac tank is to be cleaned after draining, see RTP-SOP-07 (Manual Cleaning of Frac Tanks).

c. Conditioned Water Tank Farm (TNK-RTP01-1401 and -1402), Shutdown Frac Tank

i. Lockout/tagout the frac tank by following instructions in the lockout/tagout manual.
ii. Close the manual valves upstream/downstream of the frac tank:
    1. Conditioned Water Storage Tank 1: V-RTP01-1401A, -1401B
    2. Conditioned Water Storage Tank 2: V-RTP01-1402A, -1402B

d. Conditioned Water Tank Farm (TNK-RTP01-1401 and -1402), Drain Frac Tank

i. Use the HMI to verify that there is sufficient volume in the other influent tanks for the discharge from the influent tank being drained.
ii. Proceed to next steps only if there is sufficient volume in the other influent tanks.
iii. Inspect the secondary containment per Remedy-SOP-07 (Secondary Containment Inspection and Maintenance at Buildings).
iv. Proceed to next steps only if the secondary containment is in acceptable condition. Plug in the Conditioned Water Tank Farm sump pump (PMP-RTP01-1407).
v. If the frac tank is not already shutdown, shutdown the frac tank by completing all steps listed for shutting down the Conditioned Water Tank Farm Frac Tanks (see Step c above).
vi. Slowly open the manual drain valve on the frac tank (V-RTP01-1401C for Conditioned Water Storage Tank 1, V-RTP01-1402C for Conditioned Water Storage Tank 2):
vii. Ensure that the tank drainage properly drains in the secondary containment to the sump pump.
    - If there is any malfunctioning of the secondary containment and/or sump pump, immediately close the manual drain valve that was opened in Step v.
ii. If the frac tank does not drain completely by gravity, pump out the remaining water using a portable pump or vac truck.
    - Drain the discharge into the conditioned water tank farm sump (with the portable pump) OR haul to the influent tanks or liquid phase separator (with the vac truck).
viii. After the frac tank has completely drained, close the manual drain valve that was opened in Step v.
ix. After all discharge has been pumped from the sump, unplug the Conditioned Water Tank Farm sump pump (PMP-RTP01-1407).
x. If frac tank is to be cleaned after draining, see RTP-SOP-07 (Manual Cleaning of Frac Tanks).

e. MW-20 Bench (T-IRZ00-0620, T-IRZ00-0621, T-IRZ00-0623), Shutdown Frac Tank

i. Lockout/tagout the frac tank by following instructions in the lockout/tagout manual.
ii. Close the manual valves upstream of the frac tank as applicable:
    - Backwash Frac Tank (T-IRZ00-0621): V-IRZ00-0628C, -0628I, -0628K, -0628S
    - Clean-in-Place Frac Tank (T-IRZ00-0623): V-IRZ00-0628A, -0628E, -0628G

f. MW-20 Bench (T-IRZ00-0621, T-IRZ00-0623), Drain Frac Tank

i. Use the HMI to verify that there is sufficient volume in the Remedy-produced Water Conditioning Plant Influent Tank Farm (TNK-RTP01-1101 through -1104) for the discharge from the frac tank being drained.
ii. Proceed to next steps only if there is sufficient volume in the Influent Tank Farm.
iii. Close/open valves on discharge line to direct flow to Remedy-produced Water Conditioning Plant.
    - V-IRZ00-0626B (open, manual), V-IRZ00-0626D (open, manual), V-IRZ00-0627D (open, manual), V-IRZ00-0627E (open, manual)
    - Backwash Frac Tank (T-IRZ00-0621): V-IRZ00-0626O (closed, manual)
    - Clean-in-Place Frac Tank (T-IRZ00-0623): V-IRZ00-0626O (open, manual), V-IRZ00-0626F (closed, manual), V-IRZ00-0626B (closed, manual), FCV-IRZ00-0632 (closed, via HMI)
iv. Follow Step 4 of IRZ-SOP-13 to transfer water to the Remedy-produced Water Conditioning Plant.

v. Close the manual valves downstream of the frac tank:
   - Backwash Frac Tank (T-IRZ00-0621): V-IRZ00-0626B
   - Clean-in-Place Frac Tank (T-IRZ00-0623): V-IRZ00-0626C

vi. If the frac tank is not sufficiently drained, pump out the excess water using a vac truck or submersible pump placed in frac tank.

vii. If frac tank is to be cleaned after draining, see RTP-SOP-07 (Manual Cleaning of Frac Tanks).

g. MW-20 Bench (T-IRZ00-0620), Drain Conditioned Water Frac Tank

i. Use the HMI to verify that the National Trails Highway (NTH) In-Situ Reactive Zone (IRZ) injection well system is active.

ii. Proceed to next steps only if NTH IRZ injection wells are able to receive water.

iii. Open manual valves on discharge line to direct flow to the NTH IRZ: V-IRZ00-0626A, V-IRZ00-0627B, V-IRZ00-0627H, V-IRZ00-0610H

iv. Place FCV-IRZ00-0628S into the "OPEN" position via the HMI

v. Place PMP-IRZ00-0648 (Conditioned Water Injection Pump) into "AUTO"

vi. Visually inspect the lines for signs of leaks

vii. Once T-IRZ00-0620 is empty, LT-IRZ00-0656 will initiate the programmable logic controller to do the following:
   - FCV-IRZ00-0628S will close
   - PMP-IRZ00-0648 will automatically shut off

viii. Use HMI to place PMP-IRZ00-0648 into "OFF"

ix. Close manual valve V-IRZ00-0626A downstream of the frac tank

x. If the frac tank is not sufficiently drained, pump out the excess water using a vac truck or submersible pump placed in frac tank.

xi. If frac tank is to be cleaned after draining, see RTP-SOP-07 (Manual Cleaning of Frac Tanks).

1.3. Attempt to fix the tank conditions with reference to the manufacturer's instructions, if feasible.

1.4. If the tank conditions cannot be fixed, the operator should contact the Maintenance Supervisor so parts can be procured and work can be scheduled.

2. Inspect the outside of the process tank (including tank walls, anchors, supports, stairs and platforms) for the following:

   - No signs of distortion, buckling, denting, or bulging on tank
   - No signs of cracks, leakage, or corrosion on tank
   - No severe corrosion or damage on staircase

3. Inspect the nozzles, piping and actuated and manual valves for the following:

   - No signs of leakage or damage along piping
   - No evidence of vibration along piping
   - Piping is adequately supported
   - No signs of leakage or damage at valves
   - Nozzles are adequately sealed and there are no signs of leakage or damage
   - Flanged connection bolts are tight and fully engaged with no sign of wear or corrosion

4. Carefully climb the staircase to the top of the tank to inspect the lid of the tank. If fall protection is required pursuant to California Code of Regulations (CCR) Title 8, the operator should review the requirements in the Health and Safety Plan.

5. Fall protection must also be used when inspecting the lid of the tanks. Set up and connect to fall protection and ascend onto the roof of the tank.

6. Do not break the plane of the tank lid with body parts at any time during this procedure, as it would be considered confined space entry. If confined space entry is necessary for a special procedure, the Health and Safety Plan should be referenced
7. Inspect the roof for the following:
    - No signs of distortion, buckling, denting, or bulging on roof
    - No signs of cracks, leakage, or corrosion on roof
8. Descend from the roof of the tank
9. When it is safe to do so, disconnect from fall protection.
10. Carefully descend the staircase.
11. If applicable, move to next tank for inspection and repeat Steps 1 through 10.
12. Contact the Maintenance Supervisor if there are any notes that indicate further maintenance is required so parts can be procured and work can be scheduled.

Standard Operating Procedure
PG&E Topock Conveyance Systems
Operation and Maintenance Plan

Title: Conveyance System Inspection and Maintenance
Number: PIPE-SOP-01_Rev1

Creation Date: 2/2/2015

1 Background and Scope

Pacific Gas and Electric Company (PG&E) is implementing a groundwater remedy near the intersection of Park Moabi Road and Interstate 40, approximately 12 miles southeast of Needles, California at the PG&E Topock Compressor Station (TCS).

The objective of this Standard Operating Procedure (SOP) is to describe general procedures for inspection and maintenance of the groundwater conveyance systems. Maintenance methods may include pigging, flushing, and/or chemical application.

2 Drawing Numbers

- Freshwater Injection Well and Meter Vault Plans and Sections: M-02-01
- P&ID Injection Well: I-02-02
- TCS Loop Extraction Well Vaults Mechanical Details: M-03-03
- TCS Loop Injection Well Vaults Mechanical Details: M-03-04
- TCS Loop Injection Vaults Mechanical Sections: M-03-05
- TCS Loop East Ravine Extraction Wells P&ID: I-03-01
- TCS Loop Transwestern Bench Extraction Wells P&ID: I-03-02
- TCS Loop Injection Wells P&ID: I-03-03
- IRZ Single Screen Extraction Well Vaults Mechanical Details: M-04-03
- IRZ Dual Screen Extraction Well Vaults Mechanical Details: M-04-04
- IRZ Single Screen Injection Well Vaults Mechanical Details: M-04-05
- IRZ Dual Screen Injection Well Vaults Mechanical Details: M-04-06
- IRZ Dual Screen Injection Well Vaults Mechanical Sections: M-04-07
- IRZ Single Screen Extraction Wells P&ID: I-04-01
- IRZ Dual Screen Extraction Wells P&ID: I-04-02
- IRZ Single Screen Injection Wells P&ID: I-04-03
- IRZ Dual Screen Injection Wells P&ID: I-04-04

- Inner Recirculation Loop Injection Well Vaults Type 1 Mechanical Details: M-05-05
- Inner Recirculation Loop Injection Well Vault Type 1 Mechanical Sections: M-05-06
- Inner Recirculation Loop Type 1 Injection Wells P&ID: I-05-02
- MW-20 Bench Carbon Amendment Building P&ID, Sheets 1 and 4: I-06-01 and I-06-04
- Blowoff Details: C-07-08
- P&ID Influent Tank 1: I-11-01
- P&ID Conditioned Water Storage Tank Farm A Side: I-14-01

3 Equipment

- Appropriate personal protective equipment (PPE)
- Health and Safety Plan
- Lockout/tagout manual and tags
- Keys or other tools for opening vault(s)
- Vehicle for mobilization, if necessary
- Possible equipment needed for maintenance includes but is not limited to:
    - Tools and parts for connection assembly
    - Water truck
    - Soft swab pigs and medium density pigs appropriate for pipe size
    - Flowmeter
    - Pressure gauge
    - Transport polyethylene tank with valve on outlet (capacity to be determined based on pipeline size and anticipated liquid volume)
    - Chemical transfer hose
    - Water hose
    - 5-gallon buckets with lids and spouts
    - Trailer to haul tank
    - 55-gallon drums
    - Portable secondary containment
    - Chemical spill kit including vinyl sheeting
    - Eyewash supplies and safety shower
    - Trash pump
    - Additional pump (as needed to provide motive force for pigging, flushing, chemical application)
    - Generator
    - Hose with camlock connections

4 Procedure

1. Preparatory Activities

    1.1 Verify the segment of pipe to be cleaned on the piping and instrumentation diagram (P&ID)

    1.2 Develop pipe segment-specific clearance checklist

    1.3 Take pipe segment out of service per approved clearance checklist

        1. Lockout/tagout the pipe segment following applicable sections of the lockout/tagout manual, as necessary
        2. Confirm that checklist is complete

    1.4 Fill temporary transport tank with freshwater, if required for maintenance event

        1. Hook up hose between freshwater supply source and transport tank
        2. Manually check that hose and connections are secure
            a. Secure any loose connections
            b. Connect safety whip checks
        3. Begin discharge to transport tank
            a. Monitor water level
            b. Stop discharge once tank is nearly full
            c. Close supply source valve
        4. Disconnect hose
            a. Drain hose
            b. Store hose properly

2. Mobilize to the work area

    2.1 Select a level parking area

    2.2 Establish work zone with cones

    2.3 Set up plastic sheeting around work area and under equipment

    2.4 Stage trucks and equipment to minimize slip, trip, fall hazards and allow access in and out of the work zone

3. Inspection

    3.1 Inspect the condition of the access hatch, if applicable

    CAUTION: The vault may contain biological hazards (e.g., rodents, snakes, scorpions). Use appropriate PPE and visually inspect vault to verify there are no biological hazards prior to proceeding with scope of work

    3.2 Carefully open the access hatch to the vault, if applicable

        1. Use proper lifting techniques
            a. Use two people to lower vault lids if needed
            b. Use legs instead of back to lift

    3.3 Visually check the vault, if applicable, for biological hazards

1. Contact maintenance supervisor if biological hazards are encountered
2. Await further instruction from maintenance supervisor

3.4 Visually inspect that the mechanical process piping is in good condition

1. If any items are noted as non-functioning inform the Maintenance Supervisor

4. Maintenance – Pigging

4.1 Delineate the pigging path by determining the pig launch and retrieval points (identified on P&IDs)

4.2 Valve off all intersecting pathways to prevent the pig from detouring to an incorrect location

1. Validate the valve off procedure by confirming that the flows at the launching point and retrieval point are equal

4.3 Confirm available flow and pressure is adequate to propel pigs

1. Connect additional temporary pump as necessary
2. Connect additional temporary tank as necessary

4.4 Attach the pig launcher to the wye fitting where pig will be launched from using camlock fittings

1. Launching pipe connection will include a flowmeter and pressure gauge for measuring flow and pressure

4.5 Connect hose from motive fluid/freshwater source to the pig launcher

CAUTION: Motive fluid line is under pressure. Do not open valve at this point

1. Connect hose to camlock connection of the launcher
2. Connect hose to the motive fluid line camlock connection
3. Connect safety whip line

4.6 Pig Receiver (Discharge)

1. Stage receiving tank(s) near the location where the pig receiver will be connected
2. Attach the pig receiver to the wye camlock fitting where the pig will be received
3. Connect the discharge hose of the pig receiver to receiving tank
4. Connect safety whip line

4.7 Double check connections are secure at both ends

4.8 Operation

1. First, run a soft swab pig equal to the size of the pipe
2. Slowly open valve on motive fluid line to start pig launcher
3. Monitor flow and pressure to correspond to the pipe size
4. Close valve on motive fluid line when pig reaches receiving tank
    a. The operator at the discharge side will notify the operator at the influent side if the receiving tank is within 25 percent (%) of being full
5. Second, run a soft swab pig one or two sizes larger than the pipe size. Run this pig size once or twice until dislodged sediment diminishes

6. Repeat Steps 3.8.b. through 3.8.d.
7. Finally, run a medium density poly pig one or two sizes larger than the pipe size. Run this pig size until dislodged sediment completely diminishes
8. Repeat Steps 3.8.b. through 3.8.d.
9. Containerize and properly dispose of effluent

5. Maintenance – flushing

5.1 Delineate the flushing path by determining the feed and retrieval points (identified on P&IDs)

5.2 Valve off all intersecting pathways to prevent from detouring to an incorrect location

1. Validate the valve off procedure by confirming that the flows at the feed point and retrieval point are equal

5.3 Confirm available flow and pressure is adequate for flushing

1. Connect additional temporary pump as necessary
2. Connect additional temporary tank as necessary

5.4 Connect hose from flushing fluid/freshwater source to the feed point

CAUTION: Flushing fluid line is under pressure. Do not open valve at this point

1. Connect hose to camlock connection
2. Connect hose to the conveyance line being cleared
3. Connect safety whip line

5.5 Receiving tank staging

1. Stage receiving tank(s) near the retrieval point
2. Connect the discharge hose to the retrieval point and the receiving tank
3. Connect safety whip line

5.6 Double check connections are secure at both ends

5.7 Operation

1. Slowly open valve on flushing fluid line to start flushing
2. Monitor flow and pressure
3. The operator at the discharge side will notify the operator at the influent side if the receiving tank is within 25% of being full
4. Close valve when flushing is complete

6. Maintenance – chemical application (no recirculation)

6.1 Pre-field verification

1. Obtain solution and, if applicable, pH requirements for event

6.2 Valve off all intersecting pathways to prevent chemical solution from detouring to an incorrect location (identified on P&IDs)

6.3 Chemical application

1. Verify that solution tank(s) has appropriate secondary containment

2. Stage secondary containment vinyl sheeting prior to setting up tank connections
3. Stage solution tank(s) near application point
4. Connect hose to solution tank(s) and solution pump
5. Connect hose to solution pump and application point
6. Connect safety whip check

6.4 Receiving tank staging

1. Stage secondary containment vinyl sheeting prior to tank setup
2. Stage receiving tank(s) near the retrieval point
3. Connect the discharge hose to the retrieval point and the receiving tank
4. Connect safety whip check

6.5 Double check connections are secure at both ends

6.6 Application

1. Slowly open valve(s) on solution line
2. Slowly turn on pump
3. Monitor flow and pressure
4. Turn off solution pump after required solution has been added

6.7 Post chemical application flushing

1. Connect hose from flushing fluid/freshwater source to the application point

CAUTION: Flushing fluid line is under pressure. Do not open valve at this point

   a. Connect hose to camlock connection
   b. Connect hose to the conveyance line being cleared
   c. Connect safety whip check

2. Double check connections are secure at both ends
3. Confirm that safety whip checks are installed on both ends
4. Slowly open valve on flushing fluid line to start flushing
5. Monitor flow and pressure
6. The operator at the discharge side will notify the operator at the influent side if the receiving tank is within 25% of being full
7. Close valve when flushing is complete

7. Maintenance – chemical application (recirculation)

7.1 Pre-field verification

1. Obtain solution and, if applicable, pH requirements for event

7.2 Connect hosing and adjust valving to connect pipelines for recirculation

7.3 Valve off all intersecting pathways to prevent chemical solution from detouring to an incorrect location (identified on P&IDs)

7.4 Chemical application

1. Verify that solution tank(s) has appropriate secondary containment
2. Stage secondary containment vinyl sheeting prior to setting up tank connections
3. Stage solution tank(s) near application point
4. Connect hose to solution tank(s) and solution pump
5. Connect hose to solution pump and application point
6. Connect the discharge hose to the retrieval point and the solution tank
7. Connect safety whip checks

7.5 Receiving tank staging

1. Stage secondary containment vinyl sheeting prior to tank setup
2. Stage receiving tank(s) near the retrieval point
3. Connect the discharge hose to the retrieval point and the receiving tank
4. Connect safety whip check

7.6 Double check connections are secure at both ends

7.7 Application

1. Slowly open valve(s) on solution line
2. Slowly turn on pump
3. Monitor flow and pressure
4. Monitor applicable parameters of the solution
    a. Add additional chemical if pH buffers out of desired parameters, as applicable
5. Turn off solution pump after specified recirculation time

7.8 Post chemical application flushing

1. Connect hose from flushing fluid/freshwater source to the application point

CAUTION: Flushing fluid line is under pressure. Do not open valve at this point

    a. Connect hose to camlock connection
    b. Connect hose to the conveyance line being cleared
    c. Connect safety whip check

2. Double check connections are secure at both ends
3. Confirm that safety whip checks are installed on both ends
4. Slowly open valve on flushing fluid line to start flushing
5. Monitor flow and pressure
6. The operator at the discharge side will notify the operator at the influent side if the receiving tank is within 25% of being full
7. Close valve when flushing is complete

8. Site clean up
    - 8.1 Return pipe segment to service
        1. Remove lockout/tagout as applicable
    - 8.2 Close the vault, if applicable
        1. Use proper lifting techniques
            a. Use two people to lower vault lids if needed
            b. Use legs instead of back to lift
        2. Secure bolts
    - 8.3 Properly dispose of sheeting used for staging of mechanical equipment in accordance with applicable site waste management practices
    - 8.4 Pick up cones
    - 8.5 Drive to MW-20 Bench or Remedy Produced Water Influent Tank Farm to transfer wastewater
9. Discharge to tank at MW-20 Bench or Remedy Produced Water Influent Tank Farm
    - 9.1 Verify that receiving tank (Backwash Frac Tank T-IRZ00-0621 at MW-20 Bench or Influent Tank TNK-RTP01-1101 at Remedy Produced Water Influent Tank Farm) is not receiving flow from other processes during the scheduled transfer
    - 9.2 Verify that receiving tank has adequate space for discharge volume
    - 9.3 Connect discharge tank trash pump using hose and camlock connections
    - 9.4 Connect trash pump to receiving tank using hose and camlock connections
    - 9.5 Place 5 gallon buckets under hose connections
    - 9.6 Start trash pump to begin transfer
    - 9.7 Discharge until tank is empty
    - 9.8 Stop trash pump
    - 9.9 Disconnect hoses draining water into the 5 gallon buckets
    - 9.10 Dump the collected water into the MW-20 Bench or Remedy Produced Water Influent Tank Farm sump
    - 9.11 Store equipment, tanks, and hose
    - 9.12 Notify maintenance supervisor activities are complete

Standard Operating Procedure
PG&E Topock Conveyance Systems
Operation and Maintenance Plan

Title: Well and Meter Vault Inspection and Maintenance
Number: PIPE-SOP-02_Rev1

Creation Date: 4/9/2014

1 Background and Scope

Pacific Gas and Electric Company (PG&E) is implementing a groundwater remedy near the intersection of Park Moabi Road and Interstate 40, approximately 12 miles southeast of Needles, California at the PG&E Topock Compressor Station (TCS).

The objective of this Standard Operating Procedure (SOP) is to describe the procedure for inspection and maintenance of well secondary containment vaults.

The well and meter vaults are below-ground concrete vaults. The floor of the vaults have a concrete bottom where liquids drain to a sump on one edge of the vault. The top of each vault is covered with an access hatch. Each vault contains a high level switch. Some vaults include sump pumps. Some vaults include electrical outlets.

2 Drawing Numbers

- Inner Recirculation Loop Injection Well IRL-4 Site Plan: E-05-04
- P&ID Fresh Water Injection Well: I-02-02
- Well Vault Plans and Sections: S-02-01 through S-05-08
- Freshwater Injection Well and Meter Vault Plans and Sections: M-02-01
- TCS Loop Well Vault Mechanical Details and Sections: M-03-03 through M-03-05
- IRZ Extraction Well Vault Mechanical Details and Sections: M-04-03 and M-04-04
- IRZ Single Screen Injection Well Vault Mechanical Details and Sections: M-04-05
- IRZ Dual Screen Injection Well Vault Mechanical Details and Sections: M-04-06 and M-04-07
- IRZ Dual Screen Cluster Injection Well Vault Mechanical Details and Sections: M-04-08 and M-04-09
- Inner Recirculation Loop Extraction Well Vault Mechanical Details and Sections: M-05-04
- Inner Recirculation Loop Injection Well Vault Mechanical Details and Sections: M-05-05 through M-05-08

3 Equipment

- Appropriate personal protective equipment (PPE)
- Health and Safety Plan
- Manufacturer’s operation and maintenance manuals

- Lockout/tagout manual and tags
- Keys for opening vault(s)
- Vehicle for mobilization, if necessary
- Dry towel and cleaning agents, if necessary
- Appropriate sump pump lubricants and replacement parts, if necessary (see manufacturer's instruction manual)
- Possible equipment needed to clean up leaks includes but is not limited to:
  - Shop-vac
  - Spill containment
  - Spare sump pump
  - Portable generator
  - Extension cord
  - Tools and parts of fittings for repairing pipeline
  - Tools and supplies for repairing concrete
  - Vac-truck

4 Procedure

1. General Items

   1.1 Mobilize to vault to be inspected.

   1.2 Inspect the condition of the access hatch.

CAUTION: The vault may contain biological hazards (e.g., rodents, snakes, scorpions). Use appropriate PPE and visually inspect vault to verify there are no biological hazards prior to proceeding with scope of work.

   1.3 Carefully open the access hatch to the vault.

   1.4 Visually check the vault for biological hazards.

   1.5 Visually inspect the mechanical process piping is in good condition.

      a. If any items are noted as non-functioning (e.g., signs of deterioration or damage, evidence of leakage) inform the Maintenance Supervisor.

   1.6 Check the electrical and instrumentation and controls

      a. Visually inspect that these are in good working condition.

      b. Conduct testing in accordance with the manufacturer's manual as appropriate.

         If any items are noted as non-functioning inform the Maintenance Supervisor.

   1.7 Inspect the vault for damage (cracks) or signs of wear on the concrete.

2. Water Accumulation

   2.1 Check the low point in the vault for visible signs of liquid/solid accumulation.

      a. If the liquid/solid accumulation is above the high level set point and the high level alarm and/or the sump pump did not initiate, the equipment will need to be troubleshooted (see Step 3 to troubleshoot the sump pump; see Remedy-SOP-03 to troubleshoot the high level switch).

   2.2 If there are visible signs of liquid/solid accumulation in the low point of the vault:

a. Trigger the high level float to engage the sump pump.

b. If the vault doesn't have an operating sump pump remove the accumulation using the appropriate equipment (shop-vac, vac truck, spare sump pump, etc.)

c. Determine if the water was from rain water from recent storms or a leak in process piping. Visually inspect the piping for staining, moisture, or other signs of leaks/damage, paying close attention to valves, joints, and connections.

2.3 If the source of the vault water accumulation is determined:

a. Rain water: Troubleshooting is not necessary. Proceed to Step 2.4.

b. Process Piping: Use the human machine interface (HMI) to stop the flow to or from the corresponding wells, if necessary.

c. Lockout/ tagout the well/pipeline, if necessary. Reference the lock/tagout manual for guidance.

d. Drain and evacuate the conveyance lines.

i. Disassemble the process piping

ii. Drain excess water into buckets

e. Fix the leak with reference to the relevant manufacturer's operation and maintenance manual, if it is safe and feasible to do so. If the conditions cannot be fixed or conditions would require excessive repair methods, contact the Maintenance Supervisor to determine how to proceed.

f. Hydrostatically test the line to verify the leak has been fixed.

i. Reassemble the process piping to connect to the in-well pump

ii. Activate the in-well pump to pressurize the line.

iii. Examine the line for leakage.

g. If the leak persists, repeat Steps 2.3c through f.

h. If the leak is successfully fixed, remove the lockout/ tagout from the well/pipeline, if applicable.

i. Use the HMI to restore flow to or from the corresponding injection wells, if necessary.

j. Inspect the adjacent upstream and downstream conveyance system to see if there is liquid/solid accumulation from the condition that was addressed, and use appropriate equipment to clean up the accumulation if it is present.

2.4 If the source of the leak is not determined, contact the Maintenance Supervisor to determine how to proceed.

3. Sump Pump

3.1 Inspect the sump pump in the vault (if applicable) for the following:

a. If the sump pump did not initiate when it should have (see Step 2.1), troubleshoot the sump pump with reference the manufacturer's instruction manual.

b. Visually inspect that electrical connections are in good condition.

i. Check that connections are secure. Check for signs of rust or wear.

c. Check that the mounting unit bolts are adequately tightened.

d. Operate the pump if it is not already running.

e. Check for excessive noise, vibrations and oil temperatures while the sump pump is running. Troubleshoot per the manufacturer's instruction manual if necessary.

f. Check that the discharge pressure meets specification criteria.

g. Check that the inlet is not plugged.

h. Perform any other maintenance checks/procedures recommended by the manufacturer.

4. Wrap up

4.1 Wipe down any dirty equipment with a dry towel.

4.2 After inspection and maintenance of the secondary containment well vault is complete, carefully close and lock the access hatch.

4.3 Contact the Maintenance Supervisor if there are any notes that indicate further maintenance is required so parts can be procured and work can be scheduled.

Standard Operating Procedure
PG&E Topock Freshwater Supply Conveyance and Storage Operation and Maintenance Plan

Title: Startup and Shutdown of Freshwater Supply Conveyance and Storage System

Number: FWS-SOP-01_Rev1

Created Date: 6/25/14

1 Background and Scope

Pacific Gas and Electric Company (PG&E) is implementing a groundwater remedy near the intersection of Park Moabi Road and Interstate 40, approximately 12 miles southeast of Needles, California at the PG&E PN: Topock Compressor Station (TCS).

The objective of this Standard Operating Procedure (SOP) is to describe the procedures for (a.) starting up and (b.) shutting down the freshwater supply conveyance and storage system. The procedures should only be used to perform (a.) a "hot" startup after a short term shutdown, (b.) a short term system shutdown, or (c.) system shutdown for major maintenance or repair at the well. This procedure applies to the primary freshwater supply well, HNWR-1A. The HNWR-1 well will serve as a secondary supply well and the Site B well will serve as a contingency supply well, if needed.

2 Equipment List

- Health and Safety Plan
- Appropriate personal protective equipment (PPE)

3 Drawing Numbers

- Freshwater Supply Well (HNWR-1A), Instrumentation: I-01-01
- Freshwater Tank, Instrumentation: I-02-01

4 Preconditions

Operators should have system training and operating experience before attempting a system startup or shutdown.

For (a.) system startup, power has been restored (if startup is occurring after a power outage).

For (b.) system shutdown, a power outage has occurred or system needs a manual shutdown for reasons related to the downstream users of freshwater.

For (c.) system shutdown, major maintenance or repair at the well is to be performed.

5 Procedure

a. Startup Procedure

   1. If system power outage has occurred, power first needs to be restored.
   2. Using the HMI, Switch HNWR-1A well pump PMP-HNWR1A-0110A to AUTO.

b. Short-term Shutdown Procedure

   1. Use the HMI to switch HNWR-1A well pump PMP-HNWR1A-0110A to OFF.

c. Shutdown Procedure for Major Maintenance or Repair

   1. Use the HMI to switch HNWR-1A well pump PMP-HNWR1A-0110A to OFF.
   2. Go to the Pump Control Panel on the Control Panel Equipment Pad at HNWR-1A.
   3. Turn switches for the “Main Disconnect” and “Pump Disconnect” to OFF.
   4. Lockout/ Tagout the pump (see SOP-HSE-310 Lockout/Tagout, Enterprise Standard Operating Procedure).
   5. To startup the pump after the completion of major maintenance or repair:
      a. Remove lock and tag from the pump per SOP-HSE-310.
      b. Verify manual valves V-HNWR1A-0110B, -0171A, -0161A, and -0120A, and -0120C are open.
      c. At the Pump Control Panel on the Control Panel Equipment Pad at HNWR-1A, turn switches for the “Main Disconnect” and “Pump Disconnect” to ON.
      d. Use the HMI to switch HNWR-1A well pump PMP-HNWR1A-0110A to AUTO.

Standard Operating Procedure
PG&E Topock Freshwater Supply Conveyance and Storage Operation and Maintenance Plan

Title: Sand Separator and Drywell Operation and Maintenance

Number: FWS-SOP-02_Rev1

Created Date: 6/26/14

1 Background and Scope

Pacific Gas and Electric Company (PG&E) is implementing a groundwater remedy near the intersection of Park Moabi Road and Interstate 40, approximately 12 miles southeast of Needles, California at the PG&E Topock Compressor Station (TCS).

The objective of this Standard Operating Procedure (SOP) is to describe the procedure for operation and maintenance of the sand separator and drywell at the primary freshwater supply well, HNWR-1A. The procedure can also be applied to the sand separator and drywell at the Site B freshwater well, which will serve as a contingency supply well if needed.

Visual inspections (part b.) of the sand separator, flow valve, and drywell pit are to be conducted during inspections of HNWR-1A. Internal inspections of the sand separator (part c.) are to be conducted at the frequency recommended by the manufacturer or as needed.

2 Drawing Numbers

- Freshwater Supply Wells, Instrumentation: I-01-01

3 Equipment/Supplies

- Health and Safety Plan
- Appropriate personal protective equipment (PPE)
- Manufacturer's instruction manual for sand separator (STR-HNWR1A-0110)
- Manufacturer's instruction manual for automated motorized flow valve (FV-HNWR1A-0110)
- FWS-SOP-01: Startup and Shutdown of Freshwater Supply Conveyance and Storage System
- Appropriate hand tools
- Appropriate cleaning supplies (for part c.)

4 Preconditions

- For (a.) Automatic purging and (b.) Visual inspection of sand separator (STR-HNWR1A-0110), flow valve (FV-HNWR1A-0110), and drywell pit:
  - PMP-HNWR1A-0110A is ON
  - Water level in HNWR-1A (or Site B) is above the low-level set point (LT-HNWR1A-0151)

5 Procedure

a. Automatic purging

1. The SCADA will control the motorized purge valve FV-HNWR1A-0110. Automatic purging will begin once the Preconditions are met.
2. The motorized purge valve FV- HNWR1A-0110 will purge sand from the sand separator (STR-HNWR1A-0110) at the duration and time interval set by the operator.
    i. FV- HNWR1A-0110 will initially purge sand from the STR- HNWR1A-0110 for 12 seconds, every 15 minutes.
3. Adjust the FV- HNWR1A-0110 purge duration and time interval as necessary, based on the observations of sand in the purge stream during periodic inspections of HNWR-1A (part b.).

b. Visual inspection of sand separator (STR- HNWR1A-0110), flow valve (FV- HNWR1A-0110), and drywell pit:

1. Inspection should be conducted when the Preconditions are met (i.e., the sand separator [STR-HNWR1A-0110] and motorized purge valve [FV- HNWR1A-0110] are operating).
2. Visually inspect the exterior of the sand separator (STR- HNWR1A-0110) for leaks, cracks, and damage.
    - If damage is observed and maintenance is required, reference the manufacturer's instruction manual for instructions on how to perform maintenance.
    - If damage is observed and maintenance that requires isolating the STR-HNWR1A-0110 from the flow stream is required, reference FWS-SOP-01: Startup and Shutdown of Freshwater Supply Conveyance and Storage System (part c.) for instructions on how to shut down PMP-HNWR1A-0110A for maintenance.
3. Visually inspect the motorized purge valve (FV-HNWR1A-0110) for leaks, cracks and damage.
    - If damage is observed and maintenance is required, reference the manufacturer's instruction manual for instructions on how to perform maintenance.
    - If damage is observed and maintenance that requires isolating the FV-HNWR1A-0110 is required:
        i. Turn FV-HNWR1A-0110 OFF.
        ii. Close manual valve V-HNWR1A-0110E.
        iii. Conduct maintenance per the manufacturer's instruction manual.
        iv. When maintenance is complete and FV-HNWR1A-0110 is intact, open FV- HNWR1A-0110 and purge sand from STR-HNWR1A-0110 until discharge water no longer looks sandy (i.e., sand has been completely purged from STR- HNWR1A-0110 and the entire purge line). Inspect the discharge water by lifting the lid of the drywell and visually inspecting the discharge from the purge line.
        v. Put FV-HNWR1A-0110 in AUTO mode.
4. Verify that FV-HNWR1A-0110 purges for the set duration and time interval.
5. When FV-HNWR1A-0110 is purging sand, lift the lid of the drywell and visually inspect the purge stream from the motorized purge valve to the drywell.
6. Verify that by the end of the purge duration, discharge water no longer looks sandy (i.e., sand has been completely purged from the sand separator and the entire purge line).

- If discharge water is still sandy at the end of the purge interval, extend the purge interval. Use the manufacturer's instruction manual for further guidance on selecting an optimal purge interval.

7. Open the top cover of the drywell pit.
8. Visually inspect the inside of the drywell pit to confirm that purged stream is appropriately draining into the drywell, and purged sand is not accumulating at the drywell inlet and discharge pipes.
    - If purged sand is not appropriately draining in the drywell pit and/or accumulating at the top surface of the drywell pit, contact the Maintenance Supervisor to schedule non-routine drywell maintenance (such as cleaning and replacement of geotextile fabric and/or crushed rock).
9. Close and secure the top cover of the drywell pit.

c. Internal inspection of sand separator (STR-HNWR1A-0110):

1. Open the motorized purge valve (FV-HNWR1A-0110) and purge sand from the sand separator (STR-HNWR1A-0110) until discharge water no longer looks sandy (i.e., sand has been completely purged from STR-HNWR1A-0110 and the entire purge line). Inspect the discharge water by lifting the lid of the drywell and visually inspecting the discharge from the purge line.
2. Reference FWS-SOP-01: Startup and Shutdown of Freshwater Supply Conveyance and Storage System (part c.) for instructions on how to shut down PMP-HNWR1A-0110A for maintenance.
3. Close the upstream isolation valve V-HNWR1A-0110B (HNWR-1A).
4. Close the downstream isolation valve V-HNWR1A-0171A.
5. Reference the sand separator manufacturer's instruction manual for procedures to:
    i. Drain STR-HNWR1A-0110 using the inspection/drain plug.
    ii. Inspect the inside slot area of STR-HNWR1A-0110 for sand build-up.
    iii. Clean the inside of STR-HNWR1A-0110, if necessary.
6. After inspection and maintenance of STR-HNWR1A-0110 is complete and STR-HNWR1A-0110 is intact, confirm that FV-HNWR1A-0110 is in AUTO.
7. Open the downstream isolation valve V-HNWR1A-0171A.
8. Open the upstream isolation valve V-HNWR1A-0110B (HNWR-1A).
9. Reference FWS-SOP-01: Startup and Shutdown of Freshwater Supply Conveyance and Storage System (part a.) for instructions on how to start-up PMP-HNWR1A-0110A.

Standard Operating Procedure
PG&E Topock Freshwater Supply Conveyance and Storage Operation and Maintenance Plan

Title: Freshwater Supply Well Site Inspection
Number: FWS-SOP-03_Rev1
Creation Date: 8/9/2014

1 Background and Scope

Pacific Gas and Electric Company (PG&E) is implementing a groundwater remedy near the intersection of Park Moabi Road and Interstate 40, approximately 12 miles southeast of Needles, California at the PG&E Topock Compressor Station (TCS).

The objective of this Standard Operating Procedure (SOP) is to describe the procedure for inspection of the HNWR-1A freshwater supply well site. HNWR-1A is the primary freshwater supply well for the groundwater remedy. This procedure can also be applied to inspection of the secondary supply well HNWR-1 or contingency supply Site B well.

2 Drawing Numbers

- Freshwater Supply Wells, Instrumentation: I-01-01

3 Equipment

- Appropriate personal protective equipment (PPE)
- Health and Safety Plan
- FWS-SOP-01, Startup and Shutdown of Freshwater Supply Conveyance and Storage System
- FWS-SOP-02, Sand Separator and Drywell Operation and Maintenance
- Remedy-SOP-03, Cleaning and Maintenance of Instrumentation and Control Equipment
- Manufacturer's instruction manual for the following equipment:
  - Discharge pressure indicator (PIT-HNWR1A-0161A)
  - Discharge flow meter (FM-HNWR1A-0171)
  - Refuge flow meter (FM-HNWR1A-0172)
  - Ball valves (various tag numbers, see drawing I-01-01)
  - Swing check valves (V-HNWR1A-0110A)
  - Air/vacuum release valve (AVRV-HNWR1A-0111)
- Vehicle for mobilization
- Possible equipment needed to clean well site includes but is not limited to:
  - Broom

- Dustpan
- Dry towel
- Extension cord
- Tools for repairing pipeline
- Spare fittings and valves

4 Procedure

1. Mobilization and Site Inspection

   1.1 Mobilize to well site with equipment and supplies.

   1.2 Visually inspect the site for biological hazards such as rodents, snakes, and scorpions.

   - If biological hazards are encountered, consult the Health and Safety Plan.

   1.3 Make sure yard light(s) work.

   1.4 Inspect the fence and gate for damage.

   1.5 Inspect security camera for damage and good operation.

   1.6 Inspect for and note any erosion damage to yard.

2. Well and Equipment Inspection

   CAUTION: Well casing, piping, and equipment may be hot from sun exposure.

   2.1 Visually inspect the mechanical process piping and fittings within the limits of the well site for leaks and damage.

   2.2 Visually inspect the freshwater supply well head for leaks and damage.

   2.3 Inspect paint in piping, valves and electrical boxes.

   2.4 Visually inspect that the following instrumentation and control (I&C) equipment is in good working condition and check all indicator lights:

   - PIT-HNWR1A-0161B, Discharge pressure indicator
   - FM-HNWR1A-0171, Discharge flow meter
   - FM-HNWR1A-0172, Discharge flow meter

   2.5 Visually inspect air/vacuum release valve AVRV-HNWR1A-0111 is in good working condition.

   2.6 Conduct inspection of Sand Separator (STR-HNWR1A-0110) system with reference to the following steps of FWS-SOP-02, Sand Separator and Drywell Operation and Maintenance:

   2.5.1. Part b., Visual inspection of sand separator (STR-HNWR1A-0110), flow valve (FV-HNWR1A-0110), and drywell pit, Steps 1 through 9

   2.5.2 Part c., Internal inspection of sand separator (STR-HNWR1A-0110), Steps 1 through 8 (do not conduct Step 9 [start-up of freshwater well pump PMP-HNWR1A-0110A] because freshwater well pump should remain off for Step 2.6 below)

   2.7 Inspect that the following manual valves are in good working condition by visually inspecting AND exercising (opening and closing) the valves:

   - V-HNWR1A-0172A
   - V-HNWR1A-0110B
   - V-HNWR1A-0171A
   - V-HNWR1A-0161A

- V-HNWR1A-0161C
- SP-HNWR1A-0161B

2.8 If unsuitable conditions were observed for any equipment in Steps 2.1 through 2.6 that require attention prior to restarting the well pump:

- Reference the equipment manufacturer's instruction manual(s) and Remedy-SOP-03, Cleaning and Maintenance of Instrumentation and Control Equipment (for I&C equipment only), for instructions on how to perform maintenance on equipment.
- If the equipment cannot be adequately repaired, inform the Maintenance Supervisor to procure parts and schedule additional maintenance.

2.9 Verify that valves are in appropriate position (open or closed) for routine system operation. Appropriate valve positions are in Volume 1 of the Operation and Maintenance Manual.

2.10 If the freshwater well and equipment is in appropriate condition to return to service, reference FWS-SOP-01: Startup and Shutdown of Freshwater Supply Conveyance and Storage System (part a.) for instructions on how to start-up PMP-HNWR1A-0110A.

2.11 Confirm that the following I&C equipment is functioning properly and check all indicator lights:

- PIT-HNWR1A-0161, Discharge pressure indicator
- FM-HNWR1A-0171, Discharge flow meter
- FM-HNWR1A-0172, Discharge flow meter

3. Wrap up

3.1 Wipe down any dirty equipment with a dry towel and tidy up the site with the broom and dust pan as needed.

3.2 Contact the Maintenance Supervisor if there are any items that require further attention.

Well-SOP-01 Rev. 0

Standard Operating Procedure for Well and Borehole Permanent Decommissioning

PREPARED FOR:	Topock Groundwater Remediation Project
COPY TO:	Project File
PREPARED BY:	Pacific Gas & Electric Company
DATE:	August 27, 2014

This document defines the standard operating procedures (SOP) for decommissioning groundwater wells and boreholes associated with the Pacific Gas and Electric Company (PG&E) Topock Remediation Project, Needles, California (Site). This document was developed, in part, as a direct result of Tribal concerns that included dialog regarding future decommissioning activities at the site between PG&E, agencies, and Native American Indian Tribes (Tribes). PG&E acknowledges that the Topock Remediation Project is an area that is culturally important to the Tribes and that the activities, materials, and procedures used in this process are of specific interest. Tribes have raised concerns with drilling intrusions, well and borehole decommissioning, emplacement of foreign materials into the earth, and retention of soils displaced as a result of drilling. Based on Tribal input, the potential for use of displaced site material in the decommissioning process, which may require a variance with the applicable permitting agency, is included in this document (Section 2.2.3).

An initial draft of this SOP was submitted for review and comment by the agencies and Tribes. The comments received, PG&E responses to these comments, as well as the conclusions of discussion during a June 6, 2014 conference call regarding the PG&E responses to comments are documented in Attachment A.

This SOP will be used as a reference to guide the development of future work plans required for agency, Tribal, and stakeholder review prior to conducting all well and borehole decommissioning tasks associated with the groundwater remedy. For the purpose of this SOP, an exploratory borehole (borehole) is defined as a drilled borehole in which no casings have been installed, regardless of whether or not the borehole was drilled to the water table. However, California boreholes drilled to the water table must be decommissioned per water well standards. The technical procedures included in this SOP are based on applicable regulatory and project-specific guidance information; however, specific work plans for well decommissioning tasks are necessary to evaluate task-specific details and ensure overall compliance. The structure of the SOP has been developed to provide adequate flexibility such that it can be applied to different well types and sizes in a variety of environmental settings. Specifically, this SOP provides a summary of the following key criteria that must be considered when developing a scope of work to decommission a well or exploratory borehole:

- Regulatory information and project-specific resources
- General technical specifications and procedures used for well or borehole decommissioning
- Evaluation of the well or borehole decommissioning scenarios

1.0 Summary of Guidance Information

Multiple sources of guidance information must be considered prior to conducting well or borehole decommissioning activities. Groundwater wells at the Site are located in the states of California and Arizona. Both states regulate the minimum specifications and procedures for the decommissioning of groundwater monitoring and supply wells to protect the quality of groundwater. Further, project-specific documents provide additional guidance related to sensitive cultural and biological resources. A summary of key regulatory information (project-specific applicable or relevant and appropriate [ARAR] numbers are provided) and project-specific resource documents associated with conducting groundwater well or borehole decommissioning activities is provided in the following subsections.

1.1 Regulatory Information – California (ARAR #98)

Statewide minimum standards for decommissioning a groundwater well in the State of California were established by the California Department of Water Resources (DWR) in the California Well Standards. The California Well Standards were originally established in Bulletin 74 (February 1968), later re-written as Bulletin 74-81 (December 1981), and later supplemented by Bulletin 74-90 (June 1991). The DWR states that the California Well Standards may not be sufficient for local conditions and local permitting agencies may need to adopt more stringent standards to ensure groundwater quality protection. However, The County of San Bernardino is the local permitting agency for Site wells located in California and have adopted the DWR standards.

The California Well Standards identify well destruction (or decommissioning for this SOP) requirements for both water supply wells (Part III of Bulletin 74-81), and monitoring wells and exploratory boreholes[1] (Part III of Bulletin 74-90). Although San Bernardino County does not require permits for the decommissioning of boreholes that do not reach the water table, DTSC has stated that they may request that some exploratory boreholes that do not reach the water table be decommissioned as wells under certain circumstances. For example, a borehole that terminates within 10 to 20 feet the water table and is located in an area where the potential for infiltration (e.g., wash channels) or future spills (e.g., an area of active industrial operations) is greater. The general requirements for both well types are similar; however, special considerations for monitoring wells and exploratory boreholes address the potential for these well types to be in areas of known or potential pollution or contamination.

1.2 Regulatory Information – Arizona (ARARs #48 and #49)

Development of rules for adopting standards for the construction and abandonment (or decommissioning for this SOP) of a groundwater well in the State of Arizona are required under Arizona Revised Statute 45-594(A). In response to the statute, the Arizona Department of Water Resources (ADWR), adopted the Well Abandonment Rule. The Well Abandonment Rule as Arizona Administrative Code (A.A.C) R12-15-816 was originally established on March 5, 1984. An amendment to the rule was effected on June 18, 1990. The Well Abandonment Rule requires that the abandonment (decommissioning) of a well be accomplished through filling or sealing the well so as to prevent the well from allowing the vertical movement of water. The rule contained general guidance for the decommissioning process, but lacked specific information regarding applicable aquifer conditions, and for the depths, types of materials and methods for the well decommissioning. ADWR provided additional written guidance for well abandonment to comply with A.A.C. R12-15-816(G) in the Well Abandonment Handbook on October 3, 2008.

The Well Abandonment Handbook (WAH) provides a standard well decommissioning method to be used for the post-installation of any well or borehole, regardless of the aquifer or vadose zone conditions applicable to the well (Section IV A). In addition, the WAH details five alternative abandonment methods. The five alternatives are for specific vadose zone and aquifer conditions which may include contamination, single or multiple aquifers, or dry wells (Section IV B). For example, Alternative 4, which applies to wells that only penetrate a single aquifer without vertical flow components and no water quality contamination issues, might be applicable to wells in the Topock area that are 8-inches or greater in diameter. A variance option to Alternative 4 permits the use of clean fine sand to fill the well being decommissioned.

Legal authorization from the ADWR is required to decommission most types of wells in the State of Arizona. ADWR requires a statewide decommissioning form to be filed and reviewed prior to decommissioning. The notice of intention to abandon a well (NOIA) can be obtained from the ADWR Groundwater Management Support Section in Phoenix or other local offices. In addition, all forms are available online at http://www.azwater.gov/azdwr/WaterManagement/NOI/documents/PermitsFormsApplicationsNOI.htm. The permit must be signed and filed by the well owner. The information on the NOIA must include a well construction diagram with proposed decommissioning specifications; casing type, description of the proposed method of decommissioning (over-drilling, jacking, perforation, etc.); a description of the method of emplacing sealing or fill materials; and the specific type and estimated amount of grout material to be used (water-cement ratio, water-

[1] San Bernardino County does not require permits for the installation or decommissioning of boreholes that do not reach the water table.

bentonite ratio and/or other materials or additives used). ADWR performs a completeness and substantive review of the NOIA to determine whether the proposed abandonment methods and materials meet the requirements of the ADWR abandonment rule in R12-15-816(G). If an alternative method of decommissioning is proposed in lieu of the standard method, further substantive review is performed by ADWR to verify that the proposed methods apply, and whether appropriate fill materials were chosen. A proposal to use an alternative decommissioning method requires an application to ADWR for a variance from the well decommissioning rule (a deviation from the standard decommissioning method). Following ADWR confirmation that the proposed well decommissioning methods and materials meet the requirements of the rule, a well decommissioning authorization card is mailed to the designated well drilling contractor and well decommissioning operations may begin.

1.3 Project-specific Resources

In addition to regulatory guidance, project specific requirements or information must be considered prior to initiating well decommissioning activities. The following is a list of documents that may be applicable:

- **Topock Well Inventory Data Package** – Inventory of wells related to the Topock Remediation Project for reference when developing specific plans for well decommissioning. This data package includes a technical memorandum, well location map, and a searchable spreadsheet of well details. As requested by DTSC, the well inventory spreadsheet (electronic file) and available well logs associated with the Topock Project will be archived on the DTSC website. This archive will be updated periodically as additional wells and boreholes are installed.
- **Environmental Impact Report (EIR) Mitigation Measures Reporting Program (MMRP)** – This document details specific compliance criteria that must be considered before, during, and after implementation of well decommissioning activities.
- **Management Protocol for Handling and Disposition of Displaced Site Material** – This document identifies the general approach and management protocols required for the handling and disposition of soil and/or rock that is displaced as a result of activities associated with the Pacific Gas and Electric Company (PG&E) Topock Remediation Project. The use of displaced site material for use in the well decommissioning process is discussed in Section 2.2.3.
- **Special Handling for Clay Material Encountered During Drilling** – As requested by the Hualapai Department of Cultural Resources, special handling procedures for drill cuttings generated from clay beds will be used in the field (this does not include clay-containing sediment mixtures, only clay beds). If clay bed(s) are encountered during drilling, then the cutting from those interval(s) will be set aside on 100% cotton muslin (dye free) for future disposition, following discussions with the Tribes. PG&E will notify the agencies and Tribes in the event clay material is encountered and separated for storage.
- **Previous Well Decommissioning Work Plans** –
  - Well PGE-6 Revised Decommissioning Work Plan (November 10, 2006).
  - Final Revised Implementation Plan for Repair of Monitoring Wells MW-38S and MW-38D and Old Well/Pipe Reconnaissance (February 11, 2011).
- **Comprehensive Environmental Response, Compensation, and Liability Act (CERCLA) Permit Exemption –** Per the November 16, 2007 Memorandum from the United States Department of the Interior, remedial actions including well decommissioning are exempt from the federal, state, and local permitting process. Since the issuance of this memorandum, the applicability of this exemption has been confirmed with the County of San Bernardino, California in February 2008 and January 2011. However, the County of San Bernardino will need to be consulted in the event a variance to the California Well Standards is required. The applicability of this exemption has not been confirmed with the State of Arizona. Regardless of the permit exemption, all work plans for decommissioning activities will be reviewed and approved by the appropriate state and federal agencies prior to implementation.

1.4 General Technical Resources

In addition to regulatory guidance and project specific information various technical resources should be considered during the development of a work plan for well or borehole decommissioning. The following is a list of documents that may be useful:

- Monitoring Well Design and Construction for Hydrogeologic Characterization. Guidance Manual for Ground Water Investigations. July 1995. State of California, Environmental Protection Agency.
- ASTM Standard D5299-99 (2005), "Standard Guidance for Decommissioning of Groundwater Wells, Vadose Zone Monitoring Devices, Boreholes, and Other Devices for Environmental Activities", ASTM International, West Conshohocken, PA, 2005, www.astm.org.
- ASTM Standard C150/C150M-12, "Standard Specification for Portland Cement", ASTM International, West Conshohocken, PA, 2012, www.astm.org.
- ASTM Standard D4380-84 (2006), "Standard Test Method for Density of Bentonitic Slurries", ASTM International, West Conshohocken, PA, 2012, www.astm.org.

2.0 General Technical Specifications and Procedures for Decommissioning Wells and Exploratory Boreholes

Monitoring wells or exploratory boreholes that are no longer useful must be properly decommissioned to ensure the quality of groundwater is protected and eliminate a possible physical hazard to humans and animals. Notification or permitting requirements should be evaluated prior to the initiation of well decommissioning activities in the field. Involved oversight agencies will be notified in advance of any decommissioning activities to ensure concurrence with decommissioning of a particular well(s). The general process for decommissioning a well at the Topock site is presented on Figure 1, Well Decommissioning Decision Protocol. The information provided in this section is intended to be applicable for wells or boreholes located in either California or Arizona; however, it is assumed that the details included in the specific work plan(s) will be designed in compliance with the appropriate state regulations, and reviewed by the appropriate permitting agency. In addition, depending on the condition of the aquifer and well(s) subject to decommissioning, potentially applicable variance options that include the minimization of the placement of sealing material should be evaluated with the lead agencies during well decommission work plan development (e.g., Arizona Alternative 4 – variance option). A discussion of the primary steps identified in this protocol, including the potential materials and methods required for each, is presented in the following subsections.

2.1 Evaluation of Well or Borehole

Key well or borehole information should be assembled and reviewed prior to initiating decommissioning activities to determine lithologic and well construction details, the current condition of the well or borehole, soil and water quality information, applicable regulatory criteria, and identification of the procedures and materials that should be used. The majority of this information will be available through review of drilling and well installation information, the Topock Well Inventory, groundwater sample collection logs, or other related documents. The Topock Well Inventory can be found online at: http://dtsc-topock.com/sites/default/files/Topock-Well-Inventory_Tech-Memo.pdf. However, it is possible that additional survey of the given well or borehole will be required to obtain all key information. The following is a list of survey techniques that may be utilized to evaluate the condition of well or borehole (list is not intended to be all-inclusive):

- Well measurement – Evaluation of the depth to the bottom of, or the depth to water within, a well or borehole. This is typically accomplished using a graduated measuring tape with a water sensor or blunt weight at the end.
- Video survey – An in-well video camera can be used to evaluate the condition of the well casing and screen, and identify obstructions. In-well cameras are typically calibrated for depth and orientation (i.e. north, south, east and west), and deployed on a cable using a winch.

- Geophysical survey – Depending on the well casing type, depth to water, potential presence of metallic centralizers or other well construction components, and other variables, select geophysical survey tools may be useful. Similar to an in-well camera, in-well geophysical tools are deployed on a cable using a winch. While not a complete list, examples of geophysical tools that may be useful include:
  - Acoustic (Cement Bond Log) – Used to determine the quality of cement bonding in cased or sealed wells.
  - Gamma – Used to determine intervals of bentonite seals and gravel pack.
  - Caliper – Used to verify diameter of the well or borehole, which is used to calculate borehole and well casing volumes, and identifies obstructions or areas of borehole washout or constriction.
  - Casing Inspection Thickness Measurement (CITM) – An in well survey that uses electromagnetic waves to measure well casing wall thickness in carbon based steels. Survey can be used to understand or measure the integrity of the well casing.

2.2 Identification of Materials and Placement Requirements

Different types of materials are required for different well or borehole decommissioning scenarios depending on above-ground, and subsurface environment. Sealing materials are required when the potential for flow of water through the material must be kept to an absolute minimum such that the volume of water and possible pollutants and contaminants passing through them will be of minimal consequence (no material is completely impervious). Filler material is permitted for use under some circumstances when the flow of water through the material is not of critical concern. Potential materials suitable for use during well and borehole decommissioning at the Topock site and associated placement requirements are listed in the following subsections.

2.2.1 Sealing Material

Conventional sealing activities are performed with the objective of completely filling the borehole or well casing, voids in the formation in the vicinity of the borehole, and if not over-drilled, the gravel pack and annular spaces. Sealing materials are required for use when decommissioning wells and boreholes regardless of whether they are located in an area of known or potential pollution or contamination. In uncontaminated areas where the well is wholly situated in unconsolidated material in an unconfined groundwater zone, the sealing material is focused in the upper 20 feet of the well or borehole to prevent the infiltration of potential surface contamination. In areas of known or potential soil or groundwater contamination, sealing material is required throughout the entirety of the well or borehole. The following is a list of sealing materials that may be used at the Topock site:

- Neat cement – Compose entirely of Type II/V Portland cement grout with up to 6% bentonite powder.
- Sand-cement grout – Composed of Portland cement with no more than two parts sand to one part cement by weight of sand.
- Concrete – Composed of Portland cement and aggregated mixed at a ratio of at least 564 lbs. of cement per cubic yard of aggregate. Aggregate used must be smaller than 1/5 of the radial thickness of the annular seal and is typically reserved for large volume/diameter borehole or well decommissioning.
- Bentonite clay – Composed of commercially prepared, powdered, granulated, pelletized, or chipped/crushed sodium montmorillonite clay with the largest dimension of pellet or chip being less than 1/5 the radial thickness of the annular seal. Bentonite cannot be used as a sealing material opposite zones of fractured rock, unless otherwise approved by lead agencies. As bentonite seals may have a tendency to dry, shrink and crack in arid and semi-arid areas where subsurface moisture levels can be low, they are not recommended for sealing the vadose zone at the Topock site. In addition, bentonite is not recommended for application in high TDS environments (e.g., >5,000 parts per million) due to the adverse effects on its ability to properly swell and seal in these conditions.

According to Arizona and California Well Standards, drilling mud or cuttings are not acceptable sealing materials.

Water used for the preparation of sealing materials should be potable, compatible with the type of sealing material used and free of contaminants and suspended matter. All manufacturers' specifications for mixture

volumes and curing times must be strictly followed (typically, ASTM C150, Standard Specification for Portland cement). Further, the use of any additives must comply with the requirements of ASTM C494 (Standard Specification for Chemical Admixtures for Concrete).

Sealing material must be placed into a well or borehole at the required interval(s) in one continuous decommissioning operation, which may include multiple lifts of sealant, using methods that prevent the free-fall, dilution, and/or separation of aggregates from the cementing materials. Typically, fluid sealing material is placed using a tremie pipe with positive displacement pumping (pumped under pressure), beginning at the bottom of the sealed interval with the end of the tremie pipe submerged two feet or more below the surface of the grout during placement. When using a tremie pipe, if sealing material is placed throughout the well or borehole, static water is either displaced out of the top by the injected column of sealing material, or into the formation (applicable SOPs for waste management/spill containment will followed). Alternatively, fluid sealing material may need to be pumped into the well under pressure, using the well casing as the conduit. In this case the static water and the sealing material are forced into the voids of the well/borehole and formation. When fluid sealing material is placed under pressure, the pressure must be maintained long enough for the sealing material to cure, as applicable. Dry sealing material, such as bentonite chips or pellets, are typically placed by using a tremie pipe or the well casing as a conduit. Dry sealing materials require water for hydration and proper sealing. Regardless of sealing material type or placement method, verification shall be made that the volume of the material placed in the well or borehole is at least equal to the calculated volume of void space to be sealed.

2.2.2 Filler Material

Filler materials are permitted for use in select portions of the decommissioned well or borehole when located in uncontaminated areas. Suitable filler materials include clay, silt, sand, gravel, crushed stone, native soils, mixtures of the aforementioned types, as well as sealing materials defined above. However, materials containing organic matter are not acceptable.

Filler material must be placed into the well or borehole from the bottom up, such that bridging does not occur and the entire void space is filled. To assure that bridging has not occurred during placement, verification shall be made that the volume of the material placed in the well or borehole (with appropriate porosity assumptions) is at least equal to the calculated volume of void space to be filled (i.e., empty hole).

2.2.3 Displaced Site Material

As discussed in Section 1.3 (Management Protocol for Handling and Disposition of Displaced Site Material), soil and rock that are displaced as a result of the Topock Remediation Project may be retained on site for future use. One of the potential reuses for this material identified in the management protocol is replacement into borings. If the material was generated as drill cuttings, then lead agencies must agree that the material can be used as a component of either sealing or filler material for the purpose of well or borehole decommissioning (a variance may be required).

The requirements for placement of displaced site material, should it be deemed appropriate for use based on physical and chemical composition, are the same as that for filler material. Additional processing of the displaced material may be required to ensure that grain size requirements are met, that the material is free of organic matter, and that the material can be practicably placed into the well or borehole (i.e., prevent bridging). This processing may require the use of heavy equipment for grading or crushing the material so that it is suitable for use in the decommissioning process. An appropriate onsite location would need to be identified if such processing were required.

2.3 Well or Borehole Decommissioning Scenarios

Following evaluation of the well or borehole and in coordination with lead agencies, it must be determined if the well can be decommissioned in place (with or without modification) or if the well materials must be removed. The following subsections define the decommissioning scenarios that may apply pending completion of the well evaluation and coordination with lead agencies, responsible agencies (San Bernardino County or Arizona

Department of Water Resources), affected land owner, Tribes, and other stakeholders. Artesian groundwater conditions have not been observed at the Topock site, and therefore, are not considered in this SOP.

All wells associated with the Topock Remediation Project are considered to be in non-urban areas. When developing work plans that include well or borehole decommissioning, lead and responsible agencies (San Bernardino County) in California will be consulted to confirm this assumption. For the purpose of this SOP, well or borehole decommissioning scenarios are presented for two types of well site environments. These environments, Type 1 and Type 2, are defined as:

- Type 1 Well Environment – A well classified as Type 1 is located outside the area of known or potential soil or groundwater contamination (e.g., as determined by the soil and/or groundwater quality data available for the location or the likelihood of a future release in the area) and is not located in an area that is subject to increased surface water infiltration relative to nearby upland areas (e.g., channel of Bat Cave Wash).
- Type 2 Well Environment – A well classified as Type 2 is located in an area of known or potential soil or groundwater contamination (e.g., as determined by the soil and/or groundwater quality data available for the location or the likelihood of a future release in the area) and/or in an area that is subject to increased surface water infiltration relative to nearby upland areas (e.g., channel of Bat Cave Wash). Any wells located on the Topock Compressor Station, within wash channels, within areas of concern (AOCs), or within/adjacent to roads are in a Type 2 environment.

Three approaches to well and borehole decommissioning, including one approach that would require the approval of a variance to the California Well Standards, were presented by DTSC as draft concepts for discussion during the January 19, 2012 TWG Meeting. This information is provided as Attachment B to this SOP for consideration when developing future work plans that involve borehole or well decommissioning. The overriding consideration for the variance scenario presented in Attachment B was that the decommissioning method would provide seals that had a net permeability equal to or less than the naturally occurring geologic materials encountered along the borehole.

2.3.1 Exploratory Borehole

Typically, exploratory boreholes at the Topock site are installed as part of a data collection effort (i.e., lithologic, soil or groundwater sample collection) and are immediately decommissioned once the data collection objectives for that borehole have been achieved. Therefore, the borehole is typically decommissioned while the drilling tools or casing is still in place, prior to demobilization from that borehole. The following general procedure should be followed for decommissioning an exploratory borehole:

1. Evaluate the borehole for obstructions immediately prior to conducting decommissioning activities. If an obstruction is encountered that will prevent successful sealing of the borehole, attempts must be made to remove it prior to placement of the sealing material.
2. Place sealing material from total depth to ground surface. Typically, sealing material will be placed using a tremie pipe with positive displacement pumping. Industry practice is to place sealing material from total depth to the ground surface. However, if the boring is not within an area of known or potential pollution or contamination as determined by the soil and/or groundwater quality data available for the borehole, evaluate using displaced site material, or filler material if displaced site material is not available or appropriate, in lieu of sealing material in the upper 5 to 10 feet of the borehole. The use of displaced site material or filler material may require a permit variance if the borehole reached the water table.
3. Verify that the resulting condition of the borehole opening at the surface does not present a physical hazard to humans or animals. If voids are present fill voids created with displaced site material, or filler material if displaced site material is not available or appropriate.

2.3.2 Decommissioning a Well in Place

Wells determined to have been constructed in conformance with applicable standards without indication of compromise since the time of installation may be decommissioned in place. This decommissioning option should be utilized whenever acceptable to the regulatory agencies as it represents the field procedures that are least intrusive and create the least amount of disturbance. Further, this decommissioning method is appropriate if the well is in good repair but cannot be removed (e.g., wells constructed with large diameter steel casing), or if removal would negatively influence sealing of the well (e.g., a collapse during removal). In this case the monitoring well casing and any other significant voids (i.e., pore spaces in the gravel pack), at a minimum, should be completely filled with sealing material. The following general procedure should be followed for decommissioning a well in place:

1. Conduct evaluation of the well as detailed in Section 2.1 and verify with lead agencies, responsible agencies (San Bernardino County or Arizona Department of Water Resources), affected land owner, Tribes, and other stakeholders that the well should be decommissioned in place, and whether it is in a location considered to be Type 2.
2. Evaluate well for obstructions immediately prior to conducting decommissioning activities. If an obstruction is encountered that will prevent successful sealing of the well, attempts must be made to remove it prior to placement of the sealing and/or filler material.
3. Place sealing material. Typically, if fluid sealing material is used, this will be conducted using a tremie pipe with positive displacement pumping.
    a. Type 1 Well – Evaluate using filler material in lieu of sealing material in portions of the well casing. Place sealing material from total depth to near ground surface.
    b. Type 2 Well – Place sealing material from total depth to within 5 feet of the ground surface (bgs).
4. Decommission well head.
    a. Type 1 Well – Remove all well head protection and excavate around the well casing to a depth of approximately 1 to 5 feet bgs, or as practicable. Remove all well materials to a depth of approximately 1 to 5 feet bgs, or as practicable, cap casing with sealing material such that it extends beyond the diameter of the borehole and will drain fluids away from the borehole. Backfill the void created with displaced site material, or filler material if displaced site material is not available or appropriate.
    b. Type 2 Well – Remove all well head protection and excavate around the well casing to a depth of 5 feet bgs. Remove all well materials to a depth of 5 feet bgs, cap casing with sealing material such that it extends beyond the diameter of the borehole and will drain fluids away from the borehole. Backfill the void created with displaced site material, or filler material if displaced site material is not available or appropriate.

Note that the Type 1 and Type 2 well scenarios are subtly different. While the Type 2 scenario requires the removal of all well materials to a depth of 5 feet bgs (per CA well standards), Type 1 wells do not require the removal of any well materials. The removal of well materials to a depth of approximately 1 to 5 feet bgs, or as practicable, is not required by CA well standards, but included per stakeholder comments.

2.3.3 Decommissioning a Well in Place with Modification

It may be determined that a well should be decommissioned in place, but requires modification prior to sealing. This method may be appropriate in the event well materials or an obstruction cannot be removed, clogged screen cannot be removed, or if removal would negatively influence sealing of the well. In this scenario it may be required to remove a portion of the well casing, perforate sections of the well screen or casing, or conduct other well modifications to facilitate proper sealing. The following general procedure should be followed for decommissioning a well in place when a modification is required:

1. Conduct evaluation of the well as detailed in Section 2.1 and verify with lead agencies, responsible agencies (San Bernardino County or Arizona Department of Water Resources), affected land owner, Tribes, and other stakeholders that the well should be decommissioned in place, what modification work is required, and whether it is considered to be Type 2.
2. Implement required well modification.
3. Place sealing material. The condition that warrants well modification must be evaluated to determine the method use to place the sealing material. For example, if casing perforations above the water table are required, sealing under pressure may be appropriate.
    a. Type 1 Well – Evaluate using filler material in lieu of sealing material in portions of the borehole. Place sealing material from total depth to near ground surface, or in the event casing is removed, the new top of casing depth. If a portion of the casing is removed, sealing or filler material requirements for the interval above the top of casing must be determined through discussion with lead agencies, responsible agencies (San Bernardino County or Arizona Department of Water Resources), affected land owner, Tribes, and other stakeholders.
    b. Type 2 Well – Place sealing material from total depth to within 5 feet of the ground surface (bgs). If a portion of the casing is removed, sealing or filler material requirements for the interval above the top of casing must be determined through discussion with lead agencies, responsible agencies (San Bernardino County or Arizona Department of Water Resources), affected land owner, Tribes, and other stakeholders.
5. Decommission well head.
    a. Type 1 Well –Remove all well head protection and excavate around the well casing to a depth of approximately 1 to 5 bgs, or as practicable. Removal all well materials to a depth of approximately 1 to 5 feet bgs, or as practicable, cap casing with sealing material such that it extends beyond the diameter of the borehole and will drain fluids away from the borehole. Backfill the void created with displaced site material, or filler material if displaced site material is not available or appropriate.
    b. Type 2 Well – Remove all well head protection and excavate around the well casing to a depth of 5 bgs. Removal all well materials to a depth of 5 feet bgs, cap casing with sealing material such that it extends beyond the diameter of the borehole and will drain fluids away from the borehole. Backfill the void created with displaced site material, or filler material if displaced site material is not available or appropriate.

2.3.4 Decommissioning a Well by Removing Well Materials

In some cases a well may be decommissioned by complete removal of the well materials. This method may be appropriate in the event a well was not constructed in accordance with applicable standards and the deficiencies may prevent the proper sealing of the well, even with modification. Further, when removal is practicable, lead agencies, responsible agencies (San Bernardino County or Arizona Department of Water Resources), affected land owner, or other stakeholders may determine this method preferable to others. Removal is typically conducted by over-drilling the existing well materials with larger diameter drilling tools. Typically, this method is only applied to wells constructed with polyvinyl chloride (PVC) casing or limited lengths of smaller diameter steel casing. Other methods of casing removal (e.g., hydraulic casing jacks) may be useful to remove limited lengths of larger diameter steel casing. The following general procedure should be followed for decommissioning a well by removing the well materials:

1. Conduct evaluation of the well as detailed in Section 2.1 and verify with lead agencies, responsible agencies (San Bernardino County or Arizona Department of Water Resources), affected land owner, Tribes, and other stakeholders that the well should be decommissioned by removal.
2. Remove well materials. Typically, this is conducted by over-drilling or in some cases by combination of the use of hydraulic casing jacks combined with over-drilling.

3. Evaluate borehole for obstructions immediately prior to conducting decommissioning activities. If an obstruction is encountered that will prevent successful sealing of the borehole, it must be removed prior to placement of the sealing material.
4. Place sealing/filler material from total depth to ground surface. Typically, this will be conducted using a tremie pipe with positive displacement pumping. Industry practice is to place sealing material from total depth to the ground surface. However, if the boring is not within an area of known or potential pollution or contamination, evaluate using filler material in lieu of sealing material in portions of the borehole.
5. Decommission remaining elements of the well head protection and fill voids created with displaced site material, or filler material if displaced site material is not available or appropriate.

Other methods may be employed for removal of the well, particularly for steel well materials and steel conductor casings used to seal off upper lithologic zones. Specifically, the well string (or conductor casing) may be pulled by jacking with external equipment, or with the drill rig. Once the well string is removed from the borehole, the remaining materials in the original borehole should be over-drilled to remove them from the formation.

2.4 Well Decommissioning Reporting

Following completion of well decommissioning tasks, reporting of field activities must be completed in compliance with the lead agencies requirements. In addition, project-specific reporting must be completed (as required) and the Topock Well Inventory must be updated to reflect the results of decommissioning activities. The timeline for reporting requirements will be specified in the project-specific work plan. The Well Decommissioning Report will be submitted to lead agencies no later than 90 days after completion of well decommissioning activities and will include, at a minimum:

- A summary of the approval process completed prior to well decommissioning, including reference to submitted work plans, subsequent communication and modifications (as applicable) and documentation of approval to proceed;
- Discussion regarding application of the Well Decommissioning Decision Protocol;
- Details of the work performed, including explanation of the applicable well decommissioning scenario and materials utilized;
- Documentation of compliance with applicable permitting requirements, and;
- Signature and seal of an appropriately licensed professional geologist or engineer.

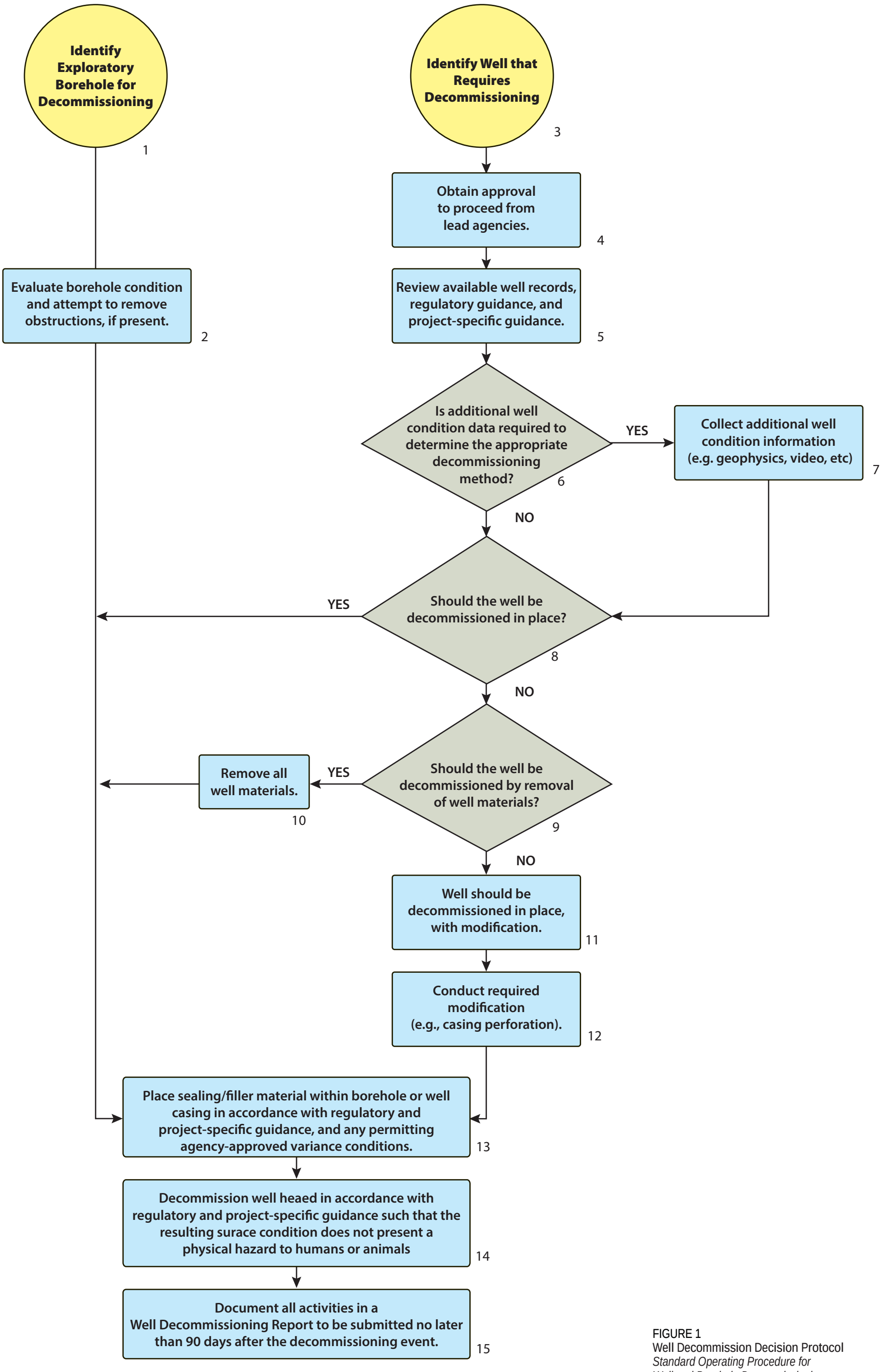

FIGURE 1
Well Decommission Decision Protocol
Standard Operating Procedure for
Well and Borehole Decommissioning
PG&E Topock Compressor Station
Needles, California

Attachment A
Responses to Comments on Draft *Standard Operating Procedure for Well and Borehole Decommissioning*

Responses to Comments on *Standard Operating Procedure for Well and Borehole Decommissioning*, Pacific Gas and Electric Company, Topock Compressor Station, Needles, California

Absolute Comment No.	Comment Source/Number	Section	Reference Text	Comment	Response	Summary of June 6, 2014 RTC Discussion
1	Arizona Department of Water Resources (ADWR) February 28, 2013 Letter ADWR-1			The text in the Standard Operation Procedure (SOP), section 1.2 states that all required forms can be obtained from the Phoenix ADWR offices. All forms are available online at: http://www.azwater.gov/iazdwr/WaterManagement/NOI/documents/PermitsFormsApplicationsNOI.htm	The text in **bold** will be added to the following statement. The notice of intention to abandon a well (NOIA) can be obtained from the ADWR Groundwater Management Support Section in Phoenix or other local offices. **In addition, all forms are available online at:** http://www.azwater.gov/iazdwr/WaterManagement/NOI/documents/PermitsFormsApplicationsNOI.htm	No additional comments.
2	ADWR-2			The SOP document describes requirements for abandoning (decommissioning) wells in Arizona and California and technical specifications and procedures for abandoning wells at the Topock Compressor Station remediation site. The proposed methods are thorough, protective of the aquifer, and consistent with minimum well construction and abandonment requirements in Arizona Administrative Code (A.A.C.) R12-15-816 and substantive policy described in the ADWR "Well Abandonment Handbook" (2008).	PG&E appreciates the review and input from ADEQ and ADWR on this SOP.	No additional comments.
3	ADWR-3			The proposed methods suggested for abandoning exploratory boreholes in Arizona utilizing "granulated material" are satisfactory. The methods are consistent with the variance option of Alternative 4 in the "Well Abandonment Handbook". Notices of Intent to Abandon a Well must be accompanied with a written request for a variance from the provisions of the minimum well construction and abandonment standards and in accordance with A.A.C. R12-15-820.	This comment is specific to the *Revised Implementation Plan for Evaluation of Alternative Freshwater Sources in the Topock Remediation Project Area, Pacific Gas and Electric Company, Topock Compressor Station, Needles, California* (January 28, 2013). However, as noted by the Fort Mojave Indian Tribe in comment FMIT-6, this represents an example of successful application of a variance to the standard well decommissioning procedure in Arizona. This variance was approved by ADWR based on project-specific information about the condition of the aquifer and planned boreholes (not a well in this example). PG&E anticipates similar discourse with the regulatory agencies based on future project-specific information in the development of future well decommissioning work plans.	No additional comments.
4	Department of Toxics Substances Control (DTSC) Document edits in redline strikeout DTSC-1	2nd paragraph	However, California boreholes drilled to the water table must be decommissioned per water well standards.	[DTSC Comment CG1]: Revise text. Clarify that an exploratory borehole drilled to the water table in California must comply with well decommissioning standards. Underlined text indicates new text inserted into document.	The text in **bold** will be added to the following statement. For the purpose of this SOP, an exploratory borehole (borehole) is defined as a drilled borehole in which no casings have been installed, regardless of whether or not the borehole was drilled to the water table. **However, California boreholes drilled to the water table must be decommissioned per water well standards.**	No additional comments.
5	DTSC-2	1.1	[1.] San Bernardino County does not require permits for the installation or decommissioning of boreholes that do not reach the water table.	[DTSC Comment CG2]: Please note that DTSC may request that some exploratory boreholes that do not reach the water table be decommissioned as wells under certain circumstances (e.g., deep boreholes that almost reach the water table). Please incorporate this concept into the SOP.	The text in **bold** will be added to the following statement. The California Well Standards identify well destruction (or decommissioning for this SOP) requirements for both water supply wells (Part III of Bulletin 74-81), and monitoring wells and exploratory boreholes[1]. **Although San Bernardino County does not require permits for the decommissioning of boreholes that do not reach the water table, DTSC has stated that they may request that some exploratory boreholes that do not reach the water table be decommissioned as wells under certain circumstances. For example, a borehole that terminates within 10 to 20 feet the water table and is located in an area where the potential for infiltration (e.g., wash channels) or future spills (e.g., an area of active industrial operations) is greater.**	No additional comments.

Absolute Comment No.	Comment Source/Number	Section	Reference Text	Comment	Response	Summary of June 6, 2014 RTC Discussion
6	DTSC-3	1.3	However, the County of San Bernardino will need to be consulted in the event a variance to the California Well Standards is required.	[DTSC Comment CG3]: As the SOP is now sufficiently developed, it is important to have San Bernardino review the next version and provide input as they are a key decision maker regarding well decommissioning.	After PG&E response to comments from ADWR, DTSC, Fort Mojave Indian Tribe and the Hualapai Dept of Cultural Resources included in this table have been addressed and discussed by the Well Decommissioning Subgroup, a draft of this SOP will be submitted to the County San Bernardino for their review and input.	No additional comments.
7	DTSC-4	2.0	Involved oversight agencies will be notified in advance of any decommissioning activities to ensure concurrence with decommissioning of a particular well(s).	Underlined text indicates new text inserted into document.	The proposed text has been added to the document.	No additional comments.
8	DTSC-5	2.1	drilling and well installation information	[DTSC Comment YA4]: A repository of drilling logs and installation notes should be put into a central archive for access by involved stakeholders.	Drilling logs and installation notes, where available, have been included in various documents submitted to the agencies following field work. As specific well decommissioning work plans are developed, this information will be included in those plans. **Further, as requested by DTSC, the well inventory spreadsheet (electronic file) and available well logs associated with the Topock Project will be archived on the DTSC website. This archive will be updated periodically as additional wells and boreholes are installed.** The text above in **bold** will be added to Section 1.3, first bullet (Topock Well Inventory Data Package).	No additional comments.
9	DTSC-6	2.1	Topock Well Inventory	[DTSC Comment CG5]; Include the current Topock Well Inventory as an electronic attachment to this SOP.	The text in **bold** will be added to the following statement. The majority of this information will be available through review of drilling and well installation information, the Topock Well Inventory, groundwater sample collection logs, or other related documents**. An electronic copy of the Topock Well Inventory has been included in this SOP under Attachment A.**	No additional comments.
10	DTSC-7	2.1	Geophysical survey – Depending on the well casing type, depth to water, presence or absence of centralizers, and other variables, select geophysical survey tools may be useful.	Underlined text indicates new text inserted into document.	The modified text in **bold** will be added to the statement. Geophysical survey – Depending on the well casing type, depth to water, **potential presence of metallic centralizers or other well construction components**, and other variables, select geophysical survey tools may be useful.	No additional comments.
11	DTSC-8	2.2.1	Bentonite cannot be used as a sealing material opposite zones of fractured rock, unless otherwise approved by lead agencies (DTSC/DOI).	Underlined text indicates new text inserted into document. Deleted text includes "the permitting" agency. Subsequent comment from DTSC regarding when bentonite is appropriate as a sealing material…	The proposed edit has been incorporated into the document. In addition, based on subsequent discussion with DTSC, the following text in **bold** has been added to Section 2.2.1, fourth bullet (bentonite clay): **In addition, bentonite is not recommended for application in high TDS environments (e.g., >5,000 parts per million) due to the adverse effects on its ability to properly swell and seal in these conditions.**	No additional comments.
12	DTSC-9	2.2.3	If the material was generated as drill cuttings, then lead agencies must agree that the material can be used as a component of either sealing or filler material for the purpose of well or borehole decommissioning (a variance may be required).	[DTSC Comment CG6]: Change text as a permit exemption may be used and since DOI and DTSC will, at a minimum, be approving agencies. Underlined text indicates new text inserted into document. Deleted text includes "the permitting" agency.	The proposed edit has been incorporated into the document.	No additional comments.

Absolute Comment No.	Comment Source/Number	Section	Reference Text	Comment	Response	Summary of June 6, 2014 RTC Discussion
13	DTSC-10	2.3	Following evaluation of the well or borehole and in coordination with the lead agencies, it must be determined if the well can be decommissioned in place (with or without modification) or if the well materials must be removed.	Underlined text indicates new text inserted into document. Deleted text includes "the permitting" agency.	The proposed edit has been incorporated into the document.	No additional comments.
14	DTSC-11	2.3	The following subsections define the decommissioning scenarios that may apply pending completion of the well evaluation and coordination with lead agencies, responsible agencies **(San Bernardino County or Arizona Department of Water Resources)**, affected land owner, **Tribes,** and other stakeholders.	Underlined text indicates new text inserted into document. Deleted text includes "the permitting" agency.	The proposed edit has been incorporated into the document.	Tech in **bold and underlined** in the "Reference Text" column has been added globally as requested during the call.
15	DTSC-12	2.3.2	1. Conduct evaluation of the well as detailed in Section 2.1 and verify with lead agencies, responsible agencies, affected land owner, and other stakeholders that the well should be decommissioned in place.	[DTSC Comment CG7]: The urban versus non-urban terms created concern to some tribes and distracted from the technical issues at hand. It is recommended that explicit reference to the term be minimized (see highlights in text and Figure 1). Perhaps just referencing the standards will suffice. Underlined text indicates new text inserted into document. Deleted text includes "the permitting" agency.	The proposed edit has been incorporated into the document. See response to comment DTSC-16 regarding the urban and non-urban topic. Reference June 6, 2014 RTC Discussion and what changes result (e.g. Type 1 and Type 2).	As a result of the June 6, 2014 RTC Discussion the terms "urban" and "non-urban" have been removed from the SOP. These terms have been replaced throughout with "Type 1" and "Type 2". A definition for these terms has been added to the beginning of Section 2.3. In addition, Figure 1 has been revised to include the new terminology.
16	DTSC-13	2.3.2	a. Non-urban Area – Place sealing material from total depth to near ground surface.	Yellow highlight added.	See response to comment DTSC-16.	See summary for comment DTSC-12.
17	DTSC-14	2.3.2	b. Urban Area – Place sealing material from total depth to within 5 feet of the ground surface (bgs).	Yellow highlight added.	See response to comment DTSC-16.	See summary for comment DTSC-12.
18	DTSC-15	2.3.2	c. For urban or non-urban area wells located outside an area of known or potential pollution or contamination as determined by the soil and/or groundwater quality data available for the location, evaluate using filler material in lieu of sealing material in portions of the well casing.	[DTSC Comment CG8]: Made edit assuming that well is left in place and could only fill well casing with filler or sealing material. Yellow highlight added. Underlined text indicates new text inserted into document. Deleted text includes "borehole".	The proposed edits have been incorporated into the document. See response to comment DTSC-16 regarding highlighted text.	See summary for comment DTSC-12.

Absolute Comment No.	Comment Source/Number	Section	Reference Text	Comment	Response	Summary of June 6, 2014 RTC Discussion
19	DTSC-16	2.3.2	a. Non-urban Area – Remove all well head protection and excavate around the well casing to a depth of approximately 5 feet bgs, or as practicable. Remove all well materials to a depth of approximately 5 feet bgs, or as practicable, cap casing with sealing material such that it extends beyond the diameter of the borehole and will drain fluids away from the borehole. Backfill the void created with displaced site material, or filler material if displaced site material is not available or appropriate. b. Urban Area – Remove all well head protection and excavate around the well casing to a depth of 5 <u>feet</u> bgs. <u>Remove</u> all well materials to a depth of 5 feet bgs, cap casing with sealing material <u>such that it extends beyond the diameter of the borehole and will drain fluids away from the borehole</u>. Backfill the void created with displaced site material, or filler material if displaced site material is not available or appropriate.	[DTSC Comment YA9]: Urban and non-urban decommissioning scenarios appear to be the same. If that the case, let's not differentiate between the two. Yellow highlight added. Underlined text indicates new text inserted into document.	The proposed edits have been incorporated into the document. The following text in **bold** has been added at the end of Section 2.3.2 to address the comment regarding the urban and non-urban topic: **Note that the urban and non-urban scenarios are only subtly different. While the urban scenario requires the removal of all well materials to a depth of 5 feet bgs (per CA well standards), non-urban areas do not require the removal of any well materials. The removal of well materials to a depth of approximately 5 feet bgs, or as practicable, is not required by CA well standards, but included per stakeholder comments.** To further clarify this difference in the text, bullet 4a (decommission well head, non-urban area) has been revised to indicate a range of 1 to 5 feet bgs. The same revision has been made to Section 2.3.3, bullet 4a, and Figure 1.	See summary for comment DTSC-12.
20	DTSC-17	2.3.3	1. Conduct evaluation of the well as detailed in Section 2.1 and verify with <u>lead agencies</u>, <u>responsible agencies</u>, affected land owner, and other stakeholders that the well should be decommissioned in place, what modification work is required, and whether it is in a location considered to be urban.	Underlined text indicates new text inserted into document. Deleted text includes "the permitting".	The proposed edit has been incorporated into the document.	See summary for comment DTSC-11.
21	DTSC-18	2.3.3	a. Non-urban Area – Place sealing material from total depth to near ground surface, or in the event casing is removed, the new top of casing depth. If a portion of the casing is removed, sealing or filler material requirements for the interval above the top of casing must be determined through discussion with <u>lead agencies, responsible agencies</u>, affected land owner, and other stakeholders.	Yellow highlight added. Underlined text indicates new text inserted into document. Deleted text includes "the permitting".	The proposed edit has been incorporated into the document. See response to comment DTSC-16 regarding highlighted text.	See summary for comment DTSC-12.
22	DTSC-19	2.3.3	b. Urban Area – Place sealing material from total depth to within 5 feet of the ground surface (bgs). If a portion of the casing is removed, sealing or filler material requirements for the interval above the top of casing must be determined through discussion with <u>lead agencies, responsible agencies</u>, affected land owner, and other stakeholders.	Yellow highlight added. Underlined text indicates new text inserted into document. Deleted text includes "the permitting".	The proposed edit has been incorporated into the document. See response to comment DTSC-16 regarding highlighted text.	See summary for comment DTSC-12.

Absolute Comment No.	Comment Source/Number	Section	Reference Text	Comment	Response	Summary of June 6, 2014 RTC Discussion
23	DTSC-20	2.3.3	c. For urban or non-urban area wells located outside an area of known or potential pollution or contamination, evaluate using filler material in lieu of sealing material in portions of the borehole.	Yellow highlight added.	See response to comment DTSC-16.	See summary for comment DTSC-12.
24	DTSC-21	2.3.3	a. Non-urban Area –Remove all well head protection and excavate around the well casing to a depth of approximately 5 bgs, or as practicable. Remove all well materials to a depth of approximately 5 feet bgs, or as practicable, cap casing with sealing material such that it extends beyond the diameter of the borehole and will drain fluids away from the borehole. Backfill the void created with displaced site material, or filler material if displaced site material is not available or appropriate. b. Urban Area – Remove all well head protection and excavate around the well casing to a depth of 5 bgs. Removal all well materials to a depth of 5 feet bgs, cap casing with sealing material such that it extends beyond the diameter of the borehole and will drain fluids away from the borehole. Backfill the void created with displaced site material, or filler material if displaced site material is not available or appropriate.	[DTSC Comment CG10]: See Comment YA9 above. Urban and non-urban decommissioning scenarios appear to be the same. If that the case, let's not differentiate between the two. Yellow highlight added.	See response to comment DTSC-16.	See summary for comment DTSC-12.
25	DTSC-22	2.3.4	Further, when removal is practicable, lead agencies, responsible agencies, affected land owner, or other stakeholders may determine this method preferable to others. Removal is typically conducted by over-drilling the existing well materials with larger diameter drilling tools.	Underlined text indicates new text inserted into document. Deleted text includes "the permitting".	The proposed edit has been incorporated into the document.	See summary for comment DTSC-11.
26	DTSC-23	2.3.4	1. Conduct evaluation of the well as detailed in Section 2.1 and verify with lead agencies, responsible agencies, affected land owner, and other stakeholders that the well should be decommissioned by removal.	Underlined text indicates new text inserted into document. Deleted text includes "the permitting".	The proposed edit has been incorporated into the document.	See summary for comment DTSC-11.
27	DTSC-24	2.4	Following completion of well decommissioning tasks, reporting of field activities must be completed in compliance with the lead agencies requirements.	Underlined text indicates new text inserted into document.	The proposed edit has been incorporated into the document.	No additional comments.
28	DTSC-25	2.4	The Well Decommissioning Report will be submitted to lead agencies no later than 90 days after completion of well decommissioning activities.	Underlined text indicates new text inserted into document.	The proposed text and text deletions have been incorporated into the document.	No additional comments.
29	DTSC-26	Figure 1	Between steps 3 and 4	Insert step: "Obtain approval to proceed from lead agencies"	The proposed revision to Figure 1 has been incorporated.	

Absolute Comment No.	Comment Source/Number	Section	Reference Text	Comment	Response	Summary of June 6, 2014 RTC Discussion
30	DTSC-27	Figure 1	After step 13	Insert step: "Document all activities in a Well Decommissioning Report to be submitted no later than 90 days after the decommissioning event.	The proposed revision to Figure 1 has been incorporated.	
31	DTSC-28	Figure 1	Step 12	Delete "e.g., urban area vs. non-urban area" within the brackets.	The proposed revision to Figure 1 has been incorporated.	
32	Hargis + Associates, Inc. Fort Mojave Indian Tribe (FMIT) April 19, 2013 Letter FMIT-1	General	No specific text.	The Tribe has asked for and supported this effort to proceduralize the decommissioning of the physical intrusions into the landscape created by the drilling of wells and boreholes. Nevertheless, the alternatives available for the decommissioning procedure remain hurtful as they represent a permanent disfiguration of the hallowed landscape across which the project will be constructed. Basically, once a well/borehole is in place, the options for decommissioning involve either the emplacement of foreign, unnatural materials in place of the materials emplaced for during well construction/operation, or attempting to destroy the original downhole materials. In the process of well destruction, however, an even greater disturbance results. Neither option is attractive to the Tribe. Avoiding further disturbances by not constructing additional wells/boreholes of course is the Tribe's preference, particularly recognizing that the cumulative number of anticipated intrusions will perhaps be 350 or more before the project is over. Nevertheless, considering the reality that more disturbances will be created as a result of the remedy, the Tribe emphasizes that flexibility must be maintained. The decision as to how to proceed with decommissioning will necessarily be case-specific and requires advance discussions and consultations with the Tribes.	Comment noted. PG&E has drafted this SOP in coordination with the agencies and Tribes to meet regulatory requirements and minimize both disturbance and the placement of foreign materials. PG&E anticipates further discussions with and input from the Tribes on future work plans, as well as consultation with Tribes in accordance with the consultation protocol detailed in the Programmatic Agreement.	
33	FMIT-2	Preface	"This document was developed as a direct result of Tribal concerns …	The preface claims that "This document was developed as a direct result of Tribal concerns …" While this is in part true, it should be acknowledged that it would have been necessary to develop and SOP for this purpose for overall project purposes anyway. The Tribal request is consistent with the ARARs identified for this action.	Comment noted. The second sentence of the first paragraph has been edited to read as follows (new text in **bold**): This document was developed**, in part,** as a direct result of Tribal concerns that included dialog regarding future decommissioning activities at the site between PG&E, agencies, and Native American Indian Tribes (Tribes).	No additional comments.
34	FMIT-3	Preface	"… use of displaced site material in the decommissioning process …"	The preface also asserts that the "… use of displaced site material in the decommissioning process …" is based on Tribal input. This again is not a possibility related to Tribal input or preference. Provisions for backfilling certain boreholes with drill cuttings is an option that is commonly exercised, such as for exploratory borings. Nevertheless, the Tribe generally regards the earth materials removed from their natural place as a disturbance and potentially a desecration of the land. This section should probably also reference the preparation of an SOP for the handling and disposition of soils displaced as a result of project activities.	While permits are not required for the decommissioning of exploratory boreholes that do not reach the water table, based on the regulations~~, it is not best industry practice to backfill boreholes with drill cuttings~~. The SOP for the handling of disposition of soils displaced as a result of project activities (Management Protocol for Handling and Disposition of Displaced Site Material) is referenced in Section 1.3. A reference to the use of displaced site material (Section 2.2.3) is already included in the first paragraph of the document.	The response has been revised per the discussion. Changes shown in ~~strikeout~~.
35	FMIT-4	Preface	"exploratory borehole."	The preface offers a definition of an "exploratory borehole." Considering that the shelf life of this document is anticipated to be in excess of three decades, there should be a definition section for this term as well as others used throughout the text, such as "decommissioning," "displaced site material," "sealing material," "filler material," "monitor well," "production or extraction well," "injection well," etc. It is understood that some of these terms do not presently appear in the text, but it is necessary to establish the types of wells/boreholes to which this SOP applies. Perhaps a section further explaining the applicability and scope of this SOP is needed.	The first sentence of the second paragraph of the SOP has been revised as follows (new text in **bold**): This SOP will be used as a reference to guide the development of future work plans required for agency, Tribal, and stakeholder review prior to conducting **all** well and borehole decommissioning tasks **associated with the groundwater remedy**. Based on the revised text definition of well types would only add complexity to the SOP. The definition of "sealing material", "filler material", and "displaced site material" is provided in detail in Sections 2.2.1, 2.2.2, and 2.2.3, respectively.	No additional comments.

Absolute Comment No.	Comment Source/Number	Section	Reference Text	Comment	Response	Summary of June 6, 2014 RTC Discussion
36	FMIT-5	Section 1.0		Both California and Arizona regulatory requirements are outlined in Section 1.0, however, the respective subsections fail to mention provisions for variances within the regulations and guidance documents cited. Additionally, are there any conflicts between the rules promulgated by the two states?	Section 1.2 (Regulatory Information – Arizona [ARARs #48 and #49]) states: *If an alternative method of decommissioning is proposed in lieu of the standard method, further substantive review is performed by ADWR to verify that the proposed methods apply, and whether appropriate fill materials were chosen. A proposal to use an alternative decommissioning method requires an application to ADWR for a variance from the well decommissioning rule (a deviation from the standard decommissioning method).* The technical specifications and procedures for decommissioning well and exploratory boreholes presented in Section 2 of the SOP were developed to be in compliance with both California and Arizona regulations.	No additional comments.
37	FMIT-6	Section 1.3		Section 1.3 discusses CERCLA exemptions for permitting proposed well abandonment. It refers to various discussions with San Bernardino County authorities in this regard and further indicates that, to date, no discussions have been scheduled. It is strongly recommended that PG&E initiate the further discussions with the respective regulatory authorities in both California and Arizona. In fact, it may be advisable to familiarize the regulatory personnel with the context of this particular procedure. The Tribe notes that a preliminary exchange has been made with the Arizona Department of Water Resources (ADWR) through the Arizona Department of Environmental Quality (ADEQ) in regard to the decommissioning of borings proposed in support of exploration for a freshwater source in Arizona. The February 28, 2013, letter from ADWR addresses a proposed variance for this purpose. This seems to indicate ADWR's willingness to work with PG&E in regard to such requests. Accordingly, further liaison with these agencies may be helpful in future situations. If the Tribe can do anything to facilitate such discussions in the interest of its preferences, it stands ready to support such an effort.	PG&E appreciates the Tribe's willingness to assist with discussions with state permitting agencies related to well decommissioning variance options. PG&E anticipates holding these discussions with the agencies when future work plans that involves well decommissioning are being developed so that specific aquifer and well conditions can be contemplated in the context of potential variance options. Further, given that the groundwater remediation project is estimated to last for tens of years, the evaluation of variance options at the time each well decommissioning plan is developed will allow for potential changes in well decommissioning regulations to also be considered.	No additional comments.

Absolute Comment No.	Comment Source/Number	Section	Reference Text	Comment	Response	Summary of June 6, 2014 RTC Discussion
38	FMIT-7	Section 2.0		Section 2.0 discusses general procedures for decommissioning. Considering the subsections that follow, it appears that PG&E is targeting a specific recommendation for the well/borehole decommissioning procedure under consideration. As discussed earlier, the Tribe requires discussion and consultation on a case-by-case basis because of the variation in construction characteristics, location, and other factors that enter into the decision. Accordingly, at the outset of such discussions, the Tribe would need information in regard to the alternative procedures available for each case. This information would facilitate the Tribes' decisions on the long-term fate of the intrusions.	As stated at the beginning Section 2.0, *The information provided in this section is intended to be applicable for wells or boreholes located in either California or Arizona; however, it is assumed that the details included in the specific work plan(s) will be designed in compliance with the appropriate state regulations, and reviewed by the appropriate permitting agency.* To more clearly acknowledge that potential for well decommissioning procedures that would require a variance to the applicable state regulations, the following statement in **bold** has been added to the document after the text referenced above: **In addition, depending on the condition of the aquifer and well(s) subject to decommissioning, potentially applicable variance options that include the minimization of the placement of sealing material should be evaluated with the lead agencies during well decommission work plan development (e.g., Arizona Alternative 4 – variance option).** In addition, the following text has been added to the end of the second paragraph in Section 1.2 (new text in **bold**): *The Well Abandonment Handbook (WAH) provides a standard well decommissioning method to be used for the post-installation of any well or borehole, regardless of the aquifer or vadose zone conditions applicable to the well (Section IV A). In addition, the WAH details five alternative abandonment methods. The five alternatives are for specific vadose zone and aquifer conditions which may include contamination, single or multiple aquifers, or dry wells (Section IV B).* ***For example, Alternative 4, which applies to wells that only penetrate a single aquifer without vertical flow components and no water quality contamination issues, might be applicable to wells in the Topock area that are 8-inches or greater in diameter. A variance option to Alternative 4 permits the use of clean fine sand to fill the well being decommissioned.*** Further, the text included in box number 13 on the decision flow chart presented in Figure 1 has been revised as follows (including text strikeout per comment DTSC-28 and with new text in **bold**): Place sealing/filler material within the borehole or well casing in accordance with regulatory and project-specific guidance**, and any permitting agency-approved variance conditions**.	During the June 6, 2014 subgroup discussion, the Tribes requested that additional information on potential variance conditions that had been previously developed by DTSC be added to this SOP. Please advise if the three schematics included in new Attachment A to this SOP are appropriate and meet the intent of this comment. Thank you.
39	FMIT-8	Section 2.2		The subsections under Section 2.2 do not appear to recognize provisions for variances as discussed earlier. Indeed such scenarios need to be developed and discussions held with the respective regulatory authorities as to the acceptability, need and justifications, and technical rationale for such requests. To this point, the subcommittee has spent time on alternative conceptual designs. This SOP does not include or acknowledge this work.	The subsections under Section 2.2 simply present the different types of materials that can be used for various well or borehole decommissioning scenarios, and not is not intended to evaluate or disqualify variance well decommissioning options. See the response to FMIT-7, which adds text to more clearly acknowledge the potential for variance options.	During the June 6, 2014 subgroup discussion, the Tribes requested that additional information on potential variance conditions that had been previously developed by DTSC be added to this SOP. Please advise if the three schematics included in new Attachment A to this SOP are appropriate and meet the intent of this comment. Thank you.

Absolute Comment No.	Comment Source/Number	Section	Reference Text	Comment	Response	Summary of June 6, 2014 RTC Discussion
40	FMIT-9	Section 2.3		Section 2.3 develops different scenarios. However, these scenarios only relate to standard situations and again do not consider the possibilities of variances. The situations in which variances are appropriate and applicable for consideration need to be developed in this procedure, otherwise those following the procedure will simply adhere strictly to the content. Additionally, this section appears to only consider the California rules, which distinguish between "urban" and "non-urban" areas. This, for example, is not a relevant consideration for the Site and is not referenced in the Arizona guidelines. The design for well decommissioning should not have to be a choice between these two options.	The evaluation of scenarios in Section 2.3 were developed in consideration of both California and Arizona regulations. The distinction between urban and non-urban is subtle and has been clarified as detailed in the response to comment DTSC-16. Both California and Arizona regulations detail specific procedures depending on aquifer and well conditions. California regulations do not reference any variance conditions, while the Arizona regulations reference alternatives to the recommended standard decommissioning procedure and some variance options associated with those alternatives. Variance conditions or potential scenarios that may or may not be approved by regulatory agencies should not be included in an SOP. Also, see comment FMIT-7.	During the June 6, 2014 subgroup discussion, the Tribes requested that additional information on potential variance conditions that had been previously developed by DTSC be added to this SOP. Please advise if the three schematics included in new Attachment A to this SOP are appropriate and meet the intent of this comment. Thank you.
41	FMIT-10	Section 2.4		Section 2.4 discusses "Well Decommissioning Reporting," and specifies that the information be reported in the Topock Well Inventory. Is this information also reported in the Well Registry for the respective states?	Yes, well decommissioning reports are filed with ADWR and California DWR in accordance with the respective well standards for each state. As noted in the first sentence of Section 2.4 (including edit made in accordance with comment DTSC-24): Following completion of well decommissioning tasks, reporting of field activities must be completed in compliance with the lead agencies requirements.	No additional comments.
42	FMIT-11	Figure 1		Figure 1 needs to be changed to reflect the above comments.	See response to comment FMIT-7.	No additional comments.
43	Hualapai Department of Cultural Resources (HDCR) April 24, 2013 Letter HDCR-1			On behalf of the Hualapai Tribe, we feel that is very important to have minimal disturbance in an area that has been under constant environmental change due to the operations of the Topock Compressor Station. As wells and well materials are intrusive, we feel that it is best that all well casings be left in-situ when and if wells are to be decommissioned. This will be the least intrusive and create the least amount of disturbance.	PG&E agrees that the decommissioning procedure which involves the least amount of disturbance that is acceptable to the regulatory agencies should be implemented. The following text in **bold** has been added to Section 2.3.2 (Decommissioning a Well in Place): **This decommissioning option should be utilized whenever acceptable to the regulatory agencies as it represents the field procedures that are least intrusive and create the least amount of disturbance.**	No additional comments.
44	HDCR-2			In the process of decommissioning, Hualapai prefer that natural materials from the immediate vicinity be placed inside the well-casings, and that wells be capped with the least amount of invasive materials, i.e. concrete, steel bolts, etc. As wells come under the decommissioning process, Hualapai would like to be informed about each well that is going to be subject to decommissioning.	See response to comment FMIT-1 regarding consultation with the Tribes on future work plans, and FMIT-7 regarding clarifying information that is being added to the document to acknowledge the potential for variance conditions.	No additional comments.

Attachment B
Draft DTSC Concepts for Well and Borehole Decommissioning

Category 1: Contaminant Free – No Variance

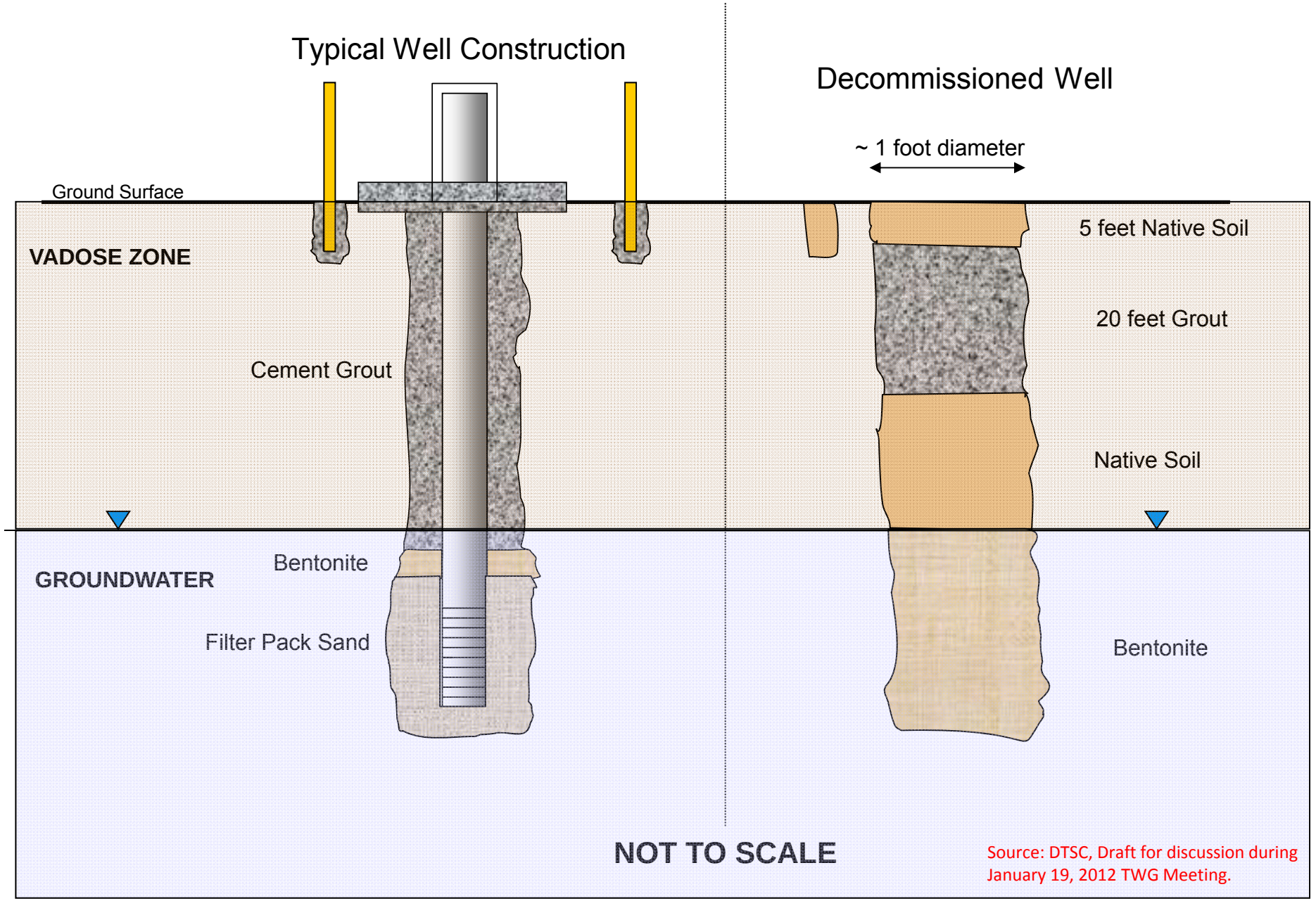

Source: DTSC, Draft for discussion during January 19, 2012 TWG Meeting.

Category 2: Contaminanted Area – No Variance

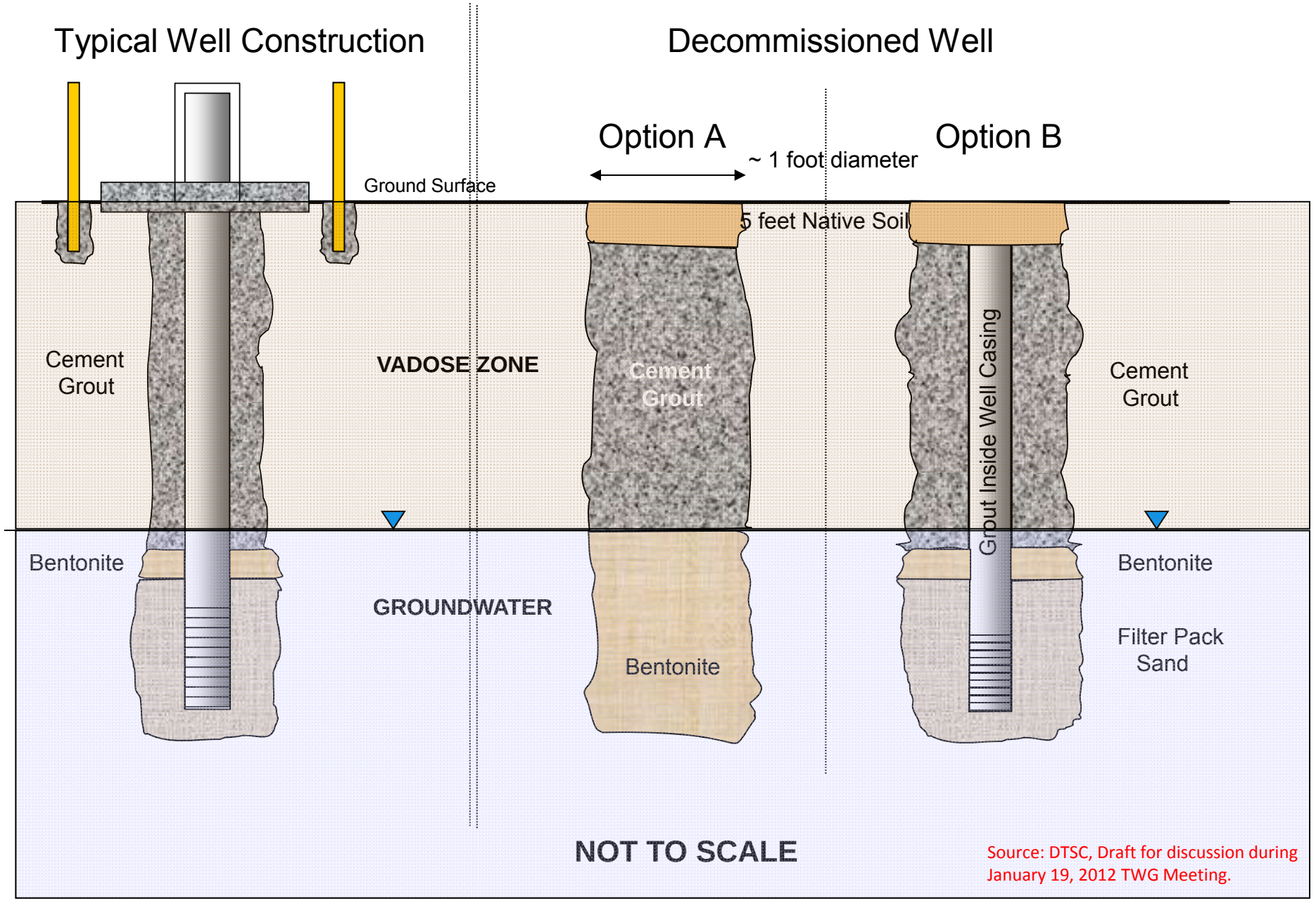

Source: DTSC, Draft for discussion during January 19, 2012 TWG Meeting.

Category 3: Contaminant Free – Variance

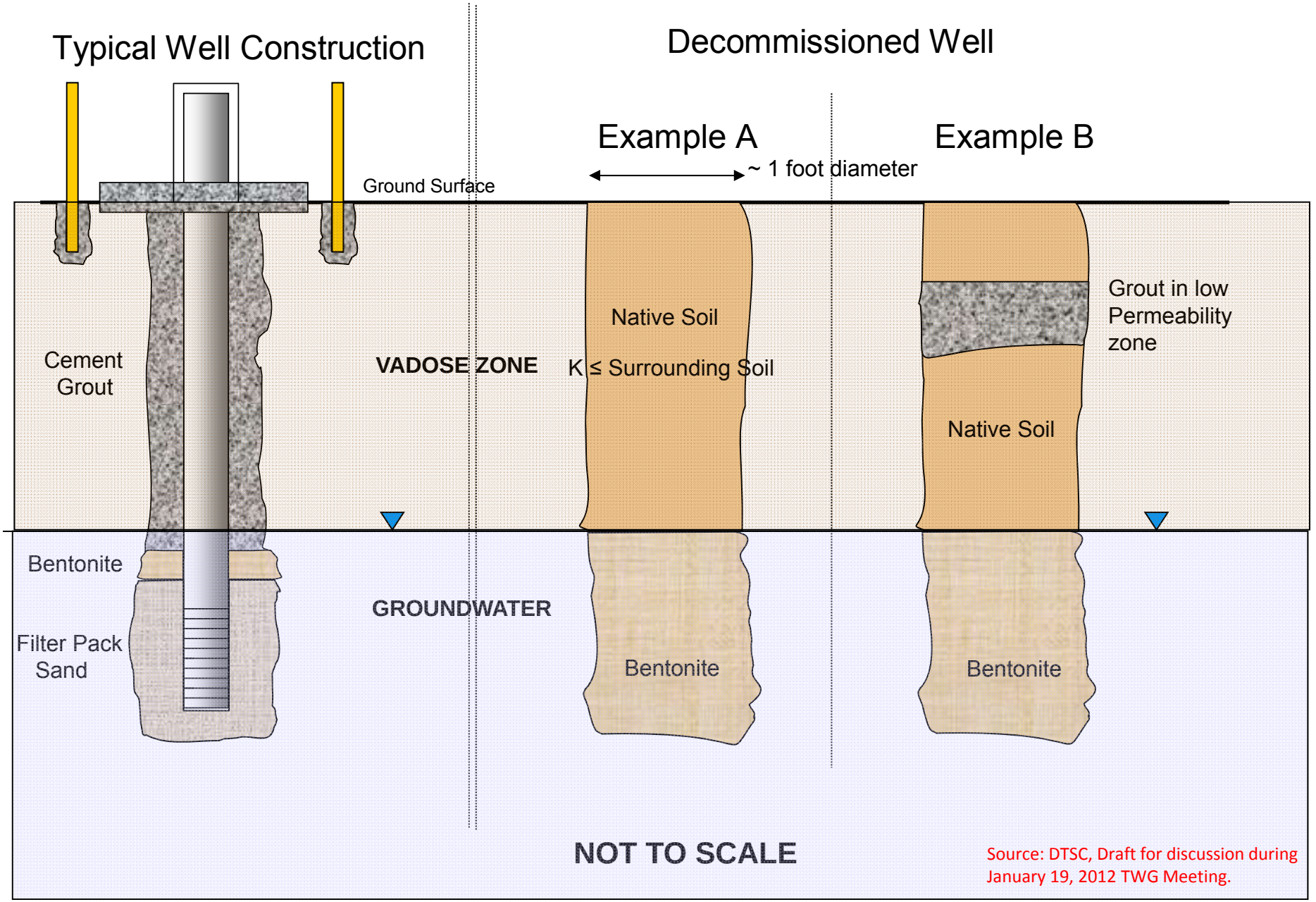

Source: DTSC, Draft for discussion during January 19, 2012 TWG Meeting.

Standard Operating Procedure
PG&E Topock Wells
Operation and Maintenance Plan

Title: Cleaning and Maintenance of Well Pumps

Number: Well-SOP-02_Rev0

Creation Date: 9/8/2014

1 Background and Scope

Pacific Gas and Electric Company (PG&E) is implementing a groundwater remedy near the intersection of Park Moabi Road and Interstate 40, approximately 12 miles southeast of Needles, California at the PG&E Topock Compressor Station (TCS).

The objective of this Standard Operating Procedure (SOP) is to describe the procedure for the cleaning and maintenance of downhole submersible pumps that may be fouled with sediment, mineral scale, biological deposits or a combination of all three. This SOP assumes that the fouled pumps have been removed from the wells.

2 Drawing Numbers

- I-01-01: Fresh Water Supply Wells P&ID
- I-02-01: Fresh Water Tanks P&ID
- I-02-02: Fresh Water Injection Well P&ID
- I-03-01: TCS Loop East Ravine Extraction Wells P&ID
- I-03-02: TCS Loop Transwestern Bench Extraction Wells P&ID
- I-03-03: TCS Loop Injection Wells P&ID
- I-04-01: IRZ Single Screen Extraction Wells P&ID
- I-04-02: IRZ Dual Screen Extraction Wells P&ID
- I-04-03: IRZ Single Screen Injection Wells P&ID
- I-04-04: IRZ Dual Screen Injection Wells P&ID
- I-04-05: IRZ Dual Screen Cluster Injection Wells P&ID Sheet 1 of 2
- I-04-06: IRZ Dual Screen Cluster Injection Wells P&ID Sheet 2 of 2
- I-05-01: Inner Recirculation Loop Extraction Wells P&ID
- I-05-02: Inner Recirculation Loop Injection Wells Type 1 P&ID
- I-05-03: Inner Recirculation Loop Injection Wells Type 2 P&ID

3 Equipment

- Health and Safety Plan
- Appropriate PPE
- Faceshield
- Chemical resistant gloves
- Chemical spill kit
- Eyewash supplies and safety shower
- Traffic cones
- Service tools
- Hose and water supply
- Horse trough
- 480 volt Power supply
- Multimeter
- Test piping with flow meter, valve and pressure gauge

4 Procedure

1. Work prior to cleaning and maintenance of pumps
    1.1 Order required service kit from manufacturer
    1.2 Obtain relevant service Instructions from the manufacturer
    1.3 Obtain eyewash kit bottles to have at well location
    1.4 Using appropriate PPE, cut the power to the designated pump at the motor control center
        1.4.1 Verify power is terminated on the downstream legs using a multimeter
        1.4.2 Perform lockout/tagout at the motor control panel on the deenergized well breaker
2. Pump removal
    2.1 Establish work zone with cones
    2.2 Stage trucks and equipment to minimize slip, trip, fall hazards and allow access in and out of the work zone
    2.3 Open the vault
        2.3.1 Use proper lifting techniques
            1. Use two staff to lift vault lids
            2. Use legs instead of back to lift
            3. Ensure vault lid supports are secure after opening
        2.3.2 Inspect vault for dangerous insects and animals
    2.4 Electrical lockout/tag out at the junction box

2.4.1 Open the junction box in the vault

2.4.2 Verify the power is terminated to the junction box using a multimeter

2.4.3 If the voltage is 0 volts, disconnect the motor wiring from the terminal block

2.5 Mechanical connections

2.5.1 Use pipe wrenches to loosen union fittings, couplings, and elbows to the riser pipe

2.6 Pump removal

2.6.1 Allow subcontracted driller to work with equipment to remove the riser pipe and spool the electrical cable

2.6.2 Monitor team for safe working conditions

1. Use stop work authority if needed to correct procedures

3. Cleaning and maintenance of Pumps

3.1 Record serial number, model number and well ID

3.2 Rinse off pump end, motor and power cable in containment area

3.3 Inspect equipment for damage or wear

3.4 Disconnect motor from the pump

3.4.1 Remove cable guard

3.4.2 Unbolt pump end from motor using appropriately sized open end wrench

3.5 Disassemble pump following the Service Instructions

3.6 Inspect impellers for wear and type of fouling deposits

3.7 Soak impellers in appropriate chemical to dissolve fouling deposits

3.8 Check bearings and replace if damaged

3.9 Replace valve seats if rubber is hard or pressed together so that the valve cup touches the metal

3.10 Replace neck ring if the rubber is hard or worn

3.11 Rinse off impellers and clean

3.12 Order or procure any damaged parts

3.13 Reassemble pump end following the Service Instructions

3.14 Reinstall motor and cable guard

4. Install new/shelf pump

4.1 Allow subcontracted driller to work with equipment to remove the riser pipe and spool the electrical cable

4.1.1 Monitor team for safe working conditions

4.1.2 Use stop work authority if needed to correct procedures

4.2 Mechanical connections

4.2.1 Use pipe wrenches to connect/tighten union fittings, couplings, and elbows to the riser pipe

4.3 Open the junction box in the vault

4.3.1 Verify the power is terminated to the junction box using a multimeter

4.3.2 If the voltage is 0 volts, connect the motor wiring to the terminal block

4.3.3 Remove electrical lockout/tag out at the junction box

4.4 Close the vault

4.4.1 Use proper lifting/decline techniques

4.4.2 Use caution with pinch point on fingers

4.4.3 Secure bolts

5. Site clean up

5.1 Properly dispose of sheeting used for staging of mechanical equipment in 55 gallon drums

5.2 Pick up cones

5.3 Place removed pump into truck and mobilize to the decon pad at the Transwestern Bench

5.4 Use a spotter to move truck to roadway

5.4.1 Do not drive more than 5 miles per hour while at the Transwestern Bench

6. Test pump at Transwestern Bench

6.1 Install test piping with flowmeter, throttling valve and pressure gauge

6.2 Place pump and piping in horse trough

6.3 Fill horse trough

6.4 Connect pump electrical wires to generator provided by subcontractor

6.5 Run pump and verify operation

7. Store pump

7.1 Attach tag with well ID, pump and motor model and serial numbers

7.2 Properly store pump

Standard Operating Procedure
PG&E Topock Wells
Operation and Maintenance Plan

Title: Physical/chemical well maintenance

Number: Well-SOP-03_Rev1

Creation Date: 9/8/2014

1 Background and Scope

Pacific Gas and Electric Company (PG&E) is implementing a groundwater remedy near the intersection of Park Moabi Road and Interstate 40, approximately 12 miles southeast of Needles, California at the PG&E Topock Compressor Station (TCS).

The objective of this Standard Operating Procedure (SOP) is to describe the procedure physical and chemical cleaning of wells.

2 Drawing Numbers

- I-01-01: Fresh Water Supply Wells P&ID
- I-02-01: Fresh Water Tanks P&ID
- I-02-02: Fresh Water Injection Well P&ID
- I-03-01: TCS Loop East Ravine Extraction Wells P&ID
- I-03-02: TCS Loop Transwestern Bench Extraction Wells P&ID
- I-03-03: TCS Loop Injection Wells P&ID
- I-04-01: IRZ Single Screen Extraction Wells P&ID
- I-04-02: IRZ Dual Screen Extraction Wells P&ID
- I-04-03: IRZ Single Screen Injection Wells P&ID
- I-04-04: IRZ Dual Screen Injection Wells P&ID
- I-04-05: IRZ Dual Screen Cluster Injection Wells P&ID Sheet 1 of 2
- I-04-06: IRZ Dual Screen Cluster Injection Wells P&ID Sheet 2 of 2
- I-05-01: Inner Recirculation Loop Extraction Wells P&ID
- I-05-02: Inner Recirculation Loop Injection Wells Type 1 P&ID
- I-05-03: Inner Recirculation Loop Injection Wells Type 2 P&ID

3 Equipment

- Health and Safety Plan

- Appropriate PPE
- Faceshield
- Leather gloves
- Nitrile gloves
- Elbow lengthed acid resistant gloves
- Splash apron
- Respirator with organic particulate filter
- 100 gallon transport polyethylene tank with valve on outlet
- Chemical transfer hose
- 5 gallon buckets with lids and spouts
- Trailer to haul tank
- 55-gallon drums
- Portable secondary containment
- Pump rig
- Chemical spill kit
- Eyewash supplies and safety shower
- Hose and water supply

4 Procedure

1. Work prior to mobilization to the well
    - 1.1 Determine amounts of chemical required based on saturated well volume prior to mobilization
    - 1.2 Verify that required chemicals are onsite
    - 1.3 Ensure that field team has copies of well log/construction diagram and downhole equipment list/drawings
    - 1.4 Ensure that well cleaning contractor knows the inner diameter size of the well so that proper tooling will be available
    - 1.5 Obtain eyewash kit bottles to have at well location
    - 1.6 Using appropriate PPE, cut the power to the designated pump at the motor control center
        - 1.6.1 Verify power is terminated on the downstream legs using a multimeter
        - 1.6.2 Perform lockout/tagout at the motor control panel on the deenergized well breaker
2. Mobilization to the work area
    - 2.1 Establish work zone with cones
    - 2.2 Stage trucks and equipment to minimize slip, trip, fall hazards and allow access in and out of the work zone
    - 2.3 Set up plastic sheeting around well head/vault and under equipment

2.4 Review well cleaning and confinded space (if applicable) JSAs with field team

2.5 Open the vault

2.5.1 Use proper lifting techniques

1. Use two staff to lift vault lids
2. Use legs instead of back to lift
3. Ensure vault lid supports are secure after opening

2.5.2 Inspect for biological hazards

2.6 Electrical lockout/tag out at the junction box

2.6.1 Opent the junction box in the vault

2.6.2 Verify the power is terminated to the junction box using a multimeter

2.6.3 If the voltage is 0 volts, disconnect the motor wiring from the terminal block

2.7 Mechanical connections

2.7.1 Use pipe wrenches to losen union fittings, coupings, and elbows to the riser pipe

3. Pump removal

3.1 Allow subcontracted driller to work with equipment to remove the riser pipe and spool the electrical cable

3.2 Monitor team for safe working conditions

3.2.1 Use stop work authority if needed to correct procedures

3.3 Measure and record:

3.3.1 Pipe lengths

3.3.2 Transducer depths

3.3.3 Pump and model and serial numbers

3.3.4 Motor model and serial numbers

3.4 Inspect all downhole equipment for damage, corrosion or wear

3.5 Inspect and test check valves

4. Well maintenance – Day 1

4.1 Put on additional PPE called out in equipment section

4.2 Transfer chemicals to 5-gallon buckets with lids for transfer to work site

4.3 Measure total depth and depth to water

4.4 Brush the well using a stiff, tight fitting brush (can be a tool with both a brush and double surge block)

4.5 Remove any dislodged solids from the well and transfer to 55-gallon drums

4.6 Measure the total depth of the well and depth to water

4.7 Fill the 100 gallon transport tank with 50 gallons of water

4.8 Position the tank/trailer next to the well head

4.9 Place the portable secondary containment under the trailer at the tank outlet.

4.10 Don PPE including respirator, face shield, splash apron and acid resistant elbow length gloves

NOTE: Never add water to acid, due to the potential to cause the acid to splash.

4.11 Transfer pre-measured chemicals in partially filled 5-gallon buckets to water in the 100 gallon transport tank.

4.12 Triple rinse empty containers and add wash water to well chemical solution.

4.13 Label the polyethylene tank as “Corrosive Material, pH < 2”.

4.14 Connect a hose from the polyethylene tank to the well casing

4.14.1 Hose must be compatible with phosphoric acid

4.14.2 Tank should be fitted with an isolation valve to control flow

4.14.3 Use a piece of transporter hose long enough to prevent solution from coming out of the well during transfer.

4.15 Gravity feed the well chemical solution into the injection well casing.

4.15.1 Add all the well chemical solution mixed for the well into the well.

NOTE: Never stand over the well, use a mirror to look down the well.

4.16 At a safe distance from the well, watch for bubbling and foaming while adding the solution.

4.16.1 If foaming is noted:

1. Stop adding the well chemical solution
2. Allow the foaming to subside, then slowly add additional solution.

4.17 Brush the well twice to mix the injected solution

4.17.1 Use a brush fitted with a stainless steel cable

4.17.2 Inspect cables prior to and after lowering brush.

4.18 Check well solution pH

4.18.1 Check pH after injecting and mixing the solution in the well

4.18.2 Use a disposable bailer, pH meter, and pH paper.

4.18.3 Add sufficient well chemical solution to keep the pH of the solution in the well below 2 SU.

4.18.4 If pH rises above 2 SU:

1. Mix additional well chemical solution
2. Add enough solution to drop the pH to below 2 SU
3. Measure the pH at the top, middle and bottom of the water column to ensure even mixing.

4.19 Following well chemical solution injection:

4.19.1 Convey a small quantity of water (2 to 3 gallons) through the hose and into the well

1. Washes out any phosphoric acid solution still present

4.19.2 Carefully remove injection hose to avoid any spilling

4.20 Allow the well to sit overnight

5. Well maintenance – Day 2

5.1 Remobilize to well next day

5.2 Don PPE as specified in JLA

5.3 Check well solution pH

5.3.1 Use a disposable bailer, pH meter, and pH paper.

5.3.2 If pH is above 2 SU:

1. Mix additional well chemical solution
2. Add enough solution to drop the pH to below 2 SU
3. Measure the pH at the top, middle and bottom of the water column to ensure even mixing.

5.4 If the pH <2 let the solution stay in the well until the following day.

6. Well maintenance – Day 3/4

6.1 After 48-72 hours from the initial acid addition, remobilize to well

6.2 Don PPE as specified in JLA

6.3 Check well solution pH

6.3.1 Use a disposable bailer, pH meter, and pH paper

6.3.2 If the pH is greater than 2 SU

1. Go to Step 6.4

6.3.3 If pH is less than 2 SU

1. Wait another day
2. Allow the pH to rise to greater than 2 SU
3. Go to Step 6.4

NOTE: Be aware that the solution is corrosive. Don appropriate PPE

6.4 When the pH is above 2, pump or bail the water out of the well into a polyethylene tank.

6.5 Waste handling/labeling

6.5.1 Label tank with “non-hazardous” waste label

6.5.2 Fill out all required information on the label.

6.6 Test the pH of the water in the tank to ensure that it is greater than 2 SU

6.7 Periodically check the pH of water in the well

6.7.1 When the pH is approximately 5 to 6 SU, brush the well for 20 to 30 minutes.

6.8 Measure the total depth to determine if sediment has entered the well.

6.9 Solids removal from well

6.9.1 Use a bailer to remove the precipitates and solids at the bottom of the well

6.9.2 Place solids into the same 55-gallon drum that was used during the initial mechanical rehab for off-site disposal.

6.10 Pump approximately 10 well volumes of water or until a turbidity of less than or equal to 100 NTU is achieved.

6.11 Reinstall injection equipment

6.12 Evaluate injection capability of the well during normal injection operation

6.13 Discuss potential video survey of well with project team

7. Reinstall pump

7.1 Allow subcontracted driller to work with equipment to remove the riser pipe and spool the electrical cable

7.1.1 Monitor team for safe working conditions

7.1.2 Use stop work authority if needed to correct procedures

7.2 Mechanical connections

7.2.1 Use pipe wrenches to connect/tighten union fittings, coupings, and elbows to the riser pipe

7.3 Wiring connection

7.3.1 Open the junction box in the vault

7.3.2 Verify the power is terminated to the junction box using a multimeter

1. Confirm voltage reads 0 volts

7.3.3 Connect the motor wiring to the terminal block

7.3.4 Remove electrical lockout/tag out at the junction box

7.4 Close the vault

7.4.1 Use proper lifting/decline techniques

7.4.2 Use caution with pinch point on fingers

7.4.3 Secure bolts

8. Site clean up

8.1 Properly dispose of sheeting used for staging of mechanical equipment in 55 gallon drums

8.2 Pick up cones

9. Disposal

9.1 Transfer drums with solids/water to sampling truck storage tank

9.2 Transfer purge water to MW-20 Bench frac tank T-IRZ00-0623

Standard Operating Procedure
PG&E Topock Wells
Operation and Maintenance Plan

Title: Well Maintenance Chemical Delivery

Number: Well-SOP-04_Rev1

Creation Date: 9/8/2014

1 Background and Scope

Pacific Gas and Electric Company (PG&E) is implementing a groundwater remedy near the intersection of Park Moabi Road and Interstate 40, approximately 12 miles southeast of Needles, California at the PG&E Topock Compressor Station (TCS).

The objective of this Standard Operating Procedure (SOP) is to describe the procedure for the delivery of well chemicals to the site. Well chemicals will be used to rehabilitate wells and downhole equipment.

2 Drawing Numbers

- I-06-04: IRZ Carbon Amendment Building P&ID Sheet 4 of 4

3 Equipment

- Health and Safety Plan
- Appropriate PPE
- Chemical spill kit
- Cones, delineators, and Caution tape to delineate work zone around delivery truck and tank
- Wheel chocks to be placed behind delivery truck tires
- Safety shower and eye wash station

4 Procedure

1. Safety shower
    1.1 Manually test safety shower and eyewash station
2. Chemical delivery truck staging
    2.1 Verify that truck has a lift gate
    2.2 Instruct truck driver not to exceed 5 miles per hour (mph) while driving onsite
    2.3 Use a spotter during delivery truck approach and parking
    2.4 Park delivery truck in designated parking space next to Tank T-IRZ00-0623
    2.5 Avoid backing transfer truck

2.6 Place wheel chocks behind truck tires once it is parked

2.7 Place buckets under hose connections in transfer equipment

3. Check chemical specifications

3.1 Confirm the appropriate product is being delivered

3.2 Sign for the delivery if it is the correct product

CAUTION: Severe burns may occur if PPE is not worn and a spill occurs

4. Chemical delivery offloading and staging

4.1 Chemicals may be delivered in drums, totes, or smaller containers

4.2 Secure drum to a drum dolly or to pallet jack

4.3 Move containers to the lift gate

4.4 Instruct the delivery driver to lower the lift gate to the ground

4.5 Roll the containers over to secondary containment adjacent to Frac Tank T-IRZ00-0623.

4.6 Unstrap the drum from the drum dolly

5. Direct delivery driver offsite

5.1 Unchock the tires

5.2 Remind driver to stay under 5 mph

5.3 Have driver pull through to parking lot exit

5.4 Spot driver out to main road

Standard Operating Procedure
PG&E Topock Wells
Operation and Maintenance Plan

Title: Use of Portable Tanks for Well Maintenance/Rehab

Number: Well-SOP-05_Rev0

Creation Date: 9/8/2014

1 Background and Scope

Pacific Gas and Electric Company (PG&E) is implementing a groundwater remedy near the intersection of Park Moabi Road and Interstate 40, approximately 12 miles southeast of Needles, California at the PG&E Topock Compressor Station (TCS).

The objective of this Standard Operating Procedure (SOP) is to describe the procedure for using portable tanks during well rehabilitation and maintenance tasks.

2 Drawing Numbers

- None

3 Equipment

- Health and Safety Plan
- Appropriate PPE
- Chemical spill kit
- Cones, delineators, and Caution tape to delineate work zone around truck/trailer
- Wheel chocks to be placed behind truck/trailer tires
- Safety shower and eye wash station

4 Procedure

1. Tank selection
    - 1.1 Determine purpose of tank and expected contents
    - 1.2 Select adequate size that allows for freeboard
    - 1.3 Select tank material that is compatible with tank contents
    - 1.4 Determine required penetrations in tank and associated appurtenances
    - 1.5 Verify that tank is designed to be tied down in trucks or on trailers
    - 1.6 Compile manufacturer's information and specifications

1.7 Determine required labeling for the tank

2. Tank installation
   - 2.1 Determine which vehicle (truck, trailer, etc.) will transport tank
   - 2.2 Verify that vehicle has adequate hold down locations to secure tank
   - 2.3 Install tank onto vehicle using adequate lifting assistance
   - 2.4 Secure tank to the vehicle following manufacturer's recommendations
3. Tank use
   - 3.1 Inspect tank and straps prior to each use
   - 3.2 Place wheel chocks behind truck/trailer tires once it is parked
   - 3.3 Verify that tank is empty and cleaned out prior to use
   - 3.4 Verify that labels are in good condition
   - 3.5 Verify that lid in secured prior to moving the vehicle
   - 3.6 Empty tank contents during assigned task
4. After use
   - 4.1 Rinse out tank at the decon pad at the Transwestern Bench
   - 4.2 Inspect tank and straps
   - 4.3 Verify that labels are in good condition
   - 4.4 Verify that lid in secured prior to moving the vehicle
   - 4.5 Unload tank using adequate lifting assistance
   - 4.6 Place tank at its designated storage location and place cones around tank

Standard Operating Procedure
PG&E Topock Wells
Operation and Maintenance Plan

Title: Packer Inspection and Maintenance/Filling Procedures

Number: Well-SOP-06_Rev0

Creation Date: 9/8/2014

1 Background and Scope

Pacific Gas and Electric Company (PG&E) is implementing a groundwater remedy near the intersection of Park Moabi Road and Interstate 40, approximately 12 miles southeast of Needles, California at the PG&E Topock Compressor Station (TCS).

The objective of this Standard Operating Procedure (SOP) is to describe the procedure for the inspection, maintenance and filling of well pneumatic packers. Packers are present in dual-screen injection and extraction wells to provide a seal such that fluids will be injected/extracted only within a specific aquifer depth interval. Periodic packer inspection is required to confirm that packers are inflated to an appropriate pressure, and to fill packers with additional air, if needed.

A ¼" hose will be routed from the top of the packer to the surface to allow for filling the packer and measuring the packer pressure. The ¼" hose will be connected to a fill assembly, mounted on the well vault wall that is comprised of a valve, pressure indicator, pressure switch, and quick connect air fitting. If the pressure of a well packer drops below the set-point of 40 pounds per square inch (psi), an alarm will be activated within the PLC, which will require operator attention. An air line quick connect fitting is available within each well vault to allow for connection of an air compressor to re-inflate the well packer.

2 Drawing Numbers

- M-03-02: TCS Loop Injection Well Construction Details
- M-03-04: TCS Loop Injection Well Vaults Mechanical Details Sheet 1 of 2
- M-03-05: TCS Loop Injection Well Vaults Mechanical Details Sheet 2 of 2
- M-04-01: IRZ Extraction Well Construction Details
- M-04-02: IRZ Injection Well Construction Details
- M-04-04: IRZ Dual Screen Extraction Well Vault Mechanical Details
- M-04-08: IRZ Dual Screen Cluster Injection Well Vaults Mechanical Details
- I-03-03: TCS Loop Injection Wells P&ID
- I-04-02: IRZ Dual Screen Extraction Wells P&ID
- I-04-04: IRZ Dual Screen Injection Wells P&ID
- I-04-05: IRZ Dual Screen Cluster Injection Wells P&ID Sheet 1 of 2

- I-04-06: IRZ Dual Screen Cluster Injection Wells P&ID Sheet 2 of 2
- I-05-01: Inner Recirculation Loop Extraction Wells P&ID
- I-05-02: Inner Recirculation Loop Injection Wells Type 1 P&ID

3 Equipment

- Health and Safety Plan
- Appropriate PPE
- Leather work gloves
- Air compressor
- Cones, delineators, and Caution tape to delineate work zone around truck/trailer
- Wheel chocks to be placed behind truck/trailer tires

4 Procedure

1. Packer inspection prior to installation
    - 1.1 Verify that packer size matches the size for a particular well.
    - 1.2 Verify that the packer has the correct number and size off penetrations. Note that all packers will have a ¼" NPT port for the air fill line and a ¾" NPT port for a pressure relief valve.
    - 1.3 Inspect the outside of the packer for any damage or wear
    - 1.4 Inspect the threads on all the penetrations.
    - 1.5 Verify that pass through piping is clear of any obstructions
2. Work area setup
    - 2.1 Establish work zone with cones
    - 2.2 Stage truck and equipment to minimize slip, trip, fall hazards and allow access in and out of the work zone
3. Opening vault lid
    - 3.1 Remove lid bolts using proper tools
    - 3.2 Use proper lifting techniques
        - 3.2.1 Use two staff to lift vault lids
        - 3.2.2 Use legs instead of back to lift
        - 3.2.3 Ensure vault lid supports are secure after opening
    - 3.3 Inspect for biological hazards
4. Checking packer pressure
    - 4.1 Pressure indicators present in each vault
        - 4.1.1 PI-*0362C – TCS Loop Dual-Screen Injection Wells
        - 4.1.2 PI-*0461F – NTH IRZ Dual-Screen Extraction Wells
        - 4.1.3 PI-*0463D – South NTH IRZ Dual-Screen Injection Wells

4.1.4 PI-*0464E – North NTH IRZ Dual-Screen Cluster Injection Wells

4.1.5 PI-*0465E – North NTH IRZ Dual-Screen Cluster Injection Wells

4.1.6 PI-*0560D – River Bank Dual Screen Extraction Wells

4.1.7 PI-*0563 – Inner Recirculation Loop Type 1 Injection Wells

4.2 Supervisory Control and Data Acquisition (SCADA) system alarm will activate if well packer pressure drops below 40 pounds per square inch (psi)

5. Inflate packer if pressure is below 50 psi
   5.1 Attach air compressor to quick connect fitting
   5.2 Open ball valve on quick connect fitting
   5.3 Turn on air compressor
      5.3.1 Observe packer pressure continuously during filling
6. Terminate packer filling
   6.1 Turn off air compressor when a pressure of 60 psi is read on the packer pressure indicator
   6.2 Close ball valve on quick connect fitting
   6.3 Check packer pressure again
      6.3.1 Fill packer again if pressure dropped during disconnect
   6.4 Record final packer pressure
   6.5 Replace filling line inside vault
7. Close vault lid
   7.1 Use proper lifting/decline techniques
   7.2 Use caution with pinch point on fingers
   7.3 Secure bolts
8. Packer inspection during well pull events
   8.1 Inspect the outside of the packer for any damage or wear
   8.2 Inspect the threads on all the penetrations
   8.3 Inspect all piping for corrosion
   8.4 Verify that pass through piping is clear of any obstructions
   8.5 Inspect the fill hose for discoloration, cracks, kinks, trapped moisture, and other signs of deterioration or wear
      8.5.1 Replace fill hose if significant deterioration or wear is observed

Standard Operating Procedure
PG&E Topock Wells
Operation and Maintenance Plan

Title: Well Rehab Bench Testing

Number: Well-SOP-07_Rev0

Creation Date: 9/8/2014

1 Background and Scope

Pacific Gas and Electric Company (PG&E) is implementing a groundwater remedy near the intersection of Park Moabi Road and Interstate 40, approximately 12 miles southeast of Needles, California at the PG&E Topock Compressor Station (TCS).

The objective of this Standard Operating Procedure (SOP) is to describe the procedure for testing well chemicals to determine the optimal type and strength required for the various types of fouling deposits that may occur in the site wells. Procedures apply to both onsite and offsite testing.

2 Drawing Numbers

- None

3 Equipment

- Health and Safety Plan
- Appropriate PPE
- Faceshield
- Chemical resistant gloves
- Chemical spill kit
- Eyewash supplies and safety shower
- Chemical 250 ml beakers and containers
- Thermometer
- Mortar and pedestal
- Weighing scale
- Drying oven
- Chemical hood
- Microscope
- Safety shower and eye wash station

4 Procedure

1. Prebench test work

   1.1 Order chemicals to be tested

   1.2 Manually test safety shower and eyewash station

   1.3 Obtain fouling deposits to be tested

2. Bench testing

   Note: Perform all testing under a chemical hood

   2.1 Preparation

      2.1.1 Crush sample with mortar and pedestal if hard and crystalline.

      2.1.2 Separate sample into multiple, equal masses reflective of the number of treatments to evaluate.

      2.1.3 Add sample portion to a 250 milliliter (mL) beaker

      2.1.4 Label each beaker according to the treatment method tested

   2.2 Chemical guidelines

      2.2.1 Acid and caustics should be NSF, food grade, or approved alternates

      2.2.2 Use concentrations that can be field implemented

      2.2.3 For acids, use standard concentrations first if evaluating multiple concentrations

         Note: that when using two acids, a dispersant is almost always needed for stabilization of reaction

      2.2.4 For blended acids, check compatibility and threshold allowances.

      2.2.5 Enhancers and surfactants: utilize NSF-approved products and follow manufacturer's guidelines

      2.2.6 Inhibitors: test with single acids after blending with water, use on NSF approved products

   2.3 Acids used in the testing:

      2.3.1 Hydrochloric acid (6% solution of 20° concentrated hydrochloric acid)

      2.3.2 Hydrochloric acid (8% solution of 20° concentrated hydrochloric acid)

      2.3.3 Hydrochloric acid (10% solution of 20° concentrated hydrochloric acid)

      2.3.4 Phosphoric acid (6% solution of 75% phosphoric acid)

      2.3.5 Phosphoric acid (8% solution of 75% phosphoric acid)

      2.3.6 Phosphoric acid (10% solution of 75% phosphoric acid)

      2.3.7 Sulfamic acid (5% solution of 100% blended sulfamic acid)

      2.3.8 Sulfamic acid (5% solution of 100% blended sulfamic acid)

      2.3.9 Oxalic acid (6% of 7% solubilized oxalic acid)

      2.3.10 Oxalic acid (6% of 7% solubilized oxalic acid)

      2.3.11 Hydroxyacetic acid (6% of 70% concentrated hydroxyacetic acid)

2.3.12 Hydroxyacetic acid (6% of 70% concentrated hydroxyacetic acid)

2.4 Chemicals used in the testing:

2.4.1 Dispersants – test 0.5%, 1.5%, and 3%

2.4.2 Biodispersants – test at 1.5% and 3%

2.4.3 Surfactants – test at 0.1% (note foaming)

2.4.4 Iron chelation – test at 0.001% and increase if iron content exceeds 1.0 milligrams per liter (mg/L)

2.4.5 Emulsifiers – test at 0.001%, 0.1% (note foaming)

3. Treatment evaluation:

3.1 Record observation on log sheet noting heat, odor, effervescence, etc.

3.2 Record appearance and effectiveness of dissolution as a percent of the whole

3.3 Evaluate the reaction at 15 minutes, 30 minutes, 1 hour and 4 hours

3.4 Evaluate level of enhancement added at 30 minutes and 1 hour time periods with the addition of mechanical energy

4. Post evaluation

4.1 Photograph deposits as received, after drying, and a microscopic at 20-30x magnification

4.2 Allow the test solutions to remain under the chemical hood and observe the time it takes for dissolution of the sample.

4.2.1 Record the estimated percentage of dissolution and general observations of residue

4.3 Neutralize all solutions following completion of testing and dispose of properly

Standard Operating Procedure
PG&E Topock Wells
Operation and Maintenance Plan

Title: Remedy Well Inspection

Number: Well-SOP-08_Rev0

Creation Date: 9/8/2014

1 Background and Scope

Pacific Gas and Electric Company (PG&E) is implementing a groundwater remedy near the intersection of Park Moabi Road and Interstate 40, approximately 12 miles southeast of Needles, California at the PG&E Topock Compressor Station (TCS).

The objective of this Standard Operating Procedure (SOP) is to describe the procedure for inspecting the well vaults, piping, appurtenances as well as collecting and recording system operating parameters.

2 Drawing Numbers

- C-00-02: Well Location Map
- C-00-03: Well Schedule
- M-02-01: Freshwater Injection Well and Meter Vault Plan and Sections
- M-03-02: TCS Loop Injection Well Construction Details
- M-03-03: TCS Loop Extraction Well Vault Mechanical Details:
- M-03-04: TCS Loop Injection Well Vaults Mechanical Details Sheet 1 of 2
- M-03-05: TCS Loop Injection Well Vaults Mechanical Details Sheet 2 of 2
- M-04-01: IRZ Extraction Well Construction Details
- M-04-02: IRZ Injection Well Construction Details
- M-04-03: IRZ Single Screen Extraction Well Vaults Mechanical Details
- M-04-04: IRZ Dual Screen Extraction Well Vaults Mechanical Details
- M-04-05: IRZ Single Screen Injection Well Vaults Mechanical Details
- M-04-06: IRZ Dual Screen Injection Well Vaults Mechanical Details
- M-04-07: IRZ Dual Screen Injection Well Vaults Mechanical Sections:
- M-04-08: IRZ Dual Screen Cluster Injection Well Vault Mechanical Details
- M-04-09: IRZ Dual Screen Cluster Injection Well Vault Mechanical Sections:
- M-05-01: Inner Recirculation Loop Extraction Well Construction Details
- M-05-02: Inner Recirculation Loop Injection Well Type 1 Construction Details

- M-05-03: Inner Recirculation Loop Injection Well Type 2 Construction Details
- M-05-04: Inner Recirculation Loop Extraction Well Vault Mechanical Details
- M-05-05: Inner Recirculation Loop Injection Well Vaults Type 1 Mechanical Details
- M-05-06: Inner Recirculation Loop Injection Well Vaults Type 1 Mechanical Sections
- I-00-03: Remedy Well ID Schedule
- I-03-01: TCS Loop East Ravine Extraction Wells P&ID
- I-03-02: TCS Loop Transwestern Bench Extraction Wells P&ID
- I-03-03: TCS Loop Injection Wells P&ID
- I-04-01: IRZ Single Screen Extraction Wells P&ID
- I-04-02: IRZ Dual Screen Extraction Wells P&ID
- I-04-03: IRZ Single Screen Injection Wells P&ID
- I-04-04: IRZ Dual Screen Injection Wells P&ID
- I-04-05: IRZ Dual Screen Cluster Injection Wells P&ID Sheet 1 of 2
- I-04-06: IRZ Dual Screen Cluster Injection Wells P&ID Sheet 2 of 2
- I-05-01: Inner Recirculation Loop Extraction Wells P&ID
- I-05-02: Inner Recirculation Loop Injection Wells Type 1 P&ID
- I-05-03: Inner Recirculation Loop Injection Wells Type 2 P&ID

3 Equipment

- Health and Safety Plan
- Appropriate PPE
- Chemical resistant gloves
- Leather work gloves
- Chemical spill kit
- Eyewash supplies and safety shower
- Handheld tablet
- Depth to water meter
- Cones, delineators, and Caution tape to delineate work zone around truck
- Wheel chocks to be placed behind truck tires

4 Procedure

Weekly/Biweekly

1. Mobilizing to injection/extraction well vault

    1.1 Do not exceed 5 miles per hour (mph) while driving onsite

1.2 Select a level parking area adjacent to vault

1.3 Park work truck adjacent to vault

2. Opening vault lid

2.1 Remove lid bolts using proper tools

2.2 Use proper lifting techniques

2.2.1 Use two staff to lift vault lids

2.2.2 Use legs instead of back to lift

2.2.3 Ensure vault lid supports are secure after opening

2.3 Inspect for biological hazards

3. Review information on expected and historical readings for the well
4. Review the checklist on the field form or handheld tablet and enter basic information, including:

4.1 Date/time

4.2 Technician(s)

4.3 Location

Note: Access into the vault should not be necessary for routine remedy well inspections

5. Check and record packer pressure, if applicable, following Well-SOP-07
6. Check and record the overall condition of vault, pipe supports, steps and lid
7. Check for and record leaks on any of the piping
8. Look for and record any standing water
9. Check and record if the well is active by noting pressure and flow on the indicators
10. Check and record any flow rate on the flow transmitter
11. Check and record any totalizer value
12. Check and record the well pressure readings. Tablet will list acceptable operational parameters
13. If applicable, sound the well measuring both the total depth and the depth to water with a depth to water meter
14. Verify that all valve and device tags are present and legible
15. Close vault lid

15.1 Use proper lifting/decline techniques

15.2 Use caution with pinch point on fingers

15.3 Secure bolts

Quarterly

16. Exercise all valves
17. Test sump alarm
18. Test level transducer alarms

18.1 Low level: raise the transducer by raising the cable until the alarm triggers

18.2 High alarm: lower excess cable in the well to lower the transducer level until a high level condition arises

19. Test pressure transmitter

19.1 High pressure: close downstream valve slowly to raise wellhead pressure past the alarm setpoint to trigger the alarm

20. Record alarm testing findings in the log

Standard Operating Procedure
PG&E Topock Groundwater Monitoring Well Maintenance Operation and Maintenance Plan

Title: Inspection and Repair of Groundwater Monitoring Wells

Number: Well-SOP-09_Rev02

Revised Date: 5/24/14

1 Background and Scope

Pacific Gas and Electric Company (PG&E) is implementing a groundwater remedy near the intersection of Park Moabi Road and Interstate 40, approximately 12 miles southeast of Needles, California at the PG&E Topock Compressor Station (TCS).

This standard operating procedure (SOP) addresses the procedures and equipment to be used for inspecting and completing repairs to groundwater monitoring wells. Inspection of the monitoring wells will be completed during each regularly scheduled sampling event but not less than quarterly. This SOP will replace Section 4.10 of the *Topock Program Sampling, Analysis, and Field Procedures Manual* (2005).

2 Required Documents

- Applicable project work plan or monitoring plan, including avoidance and minimization measures, as applicable
- Topock Program Health and Safety Plan (HSP)
- Well Operation and Maintenance (O&M) Manual
- Applicable current SOPs, which may include the following:
  - SOP-A9, *Calibration of Field Instruments*
  - SOP-A10, *Decontamination of Water Sampling Equipment*
  - SOP-A11, *Total Depth Measurements*
  - SOP-A13, *Spill Prevention, Containment, and Control Measures for Monitoring Well Sampling*
  - SOP-C1, *Solinst Pressure Transducers*
- Current site access map
- Blank Well Inspection Log (see attachment), maps, and a field notebook. For annual total depth survey, add well construction details (total depth, screen interval, sump depth if present).
- Maintenance records/documentation

3 Equipment/Supplies List

Depending on the type(s) of maintenance tasks being performed, some or all of the following may be required:

- Appropriate Personal Protective Equipment (PPE).

- 200-foot (ft.) (or longer, up to 400 ft. as needed based on well construction details) water level indicator (WLI).
- Well keys and gate keys as necessary.
- Utility vehicles (UTVs) as necessary.
- Paint marker, black “Sharpie” marker, and ballpoint pen.
- Durable aluminum or similar well tags with "zip tie" or similar fasteners.
- Hand tools as required, which may include drill and bits for drilling through steel well casing lid.
- Length of steel chain (for repairing broken well lid hinge) and 5/16-inch (in.) carriage bolts. The chain material should be about ¼ inch diameter and the links must be large enough to pass the 5/16-inch carriage bolt.
- Clean sand or pea gravel.
- Spare locks, water-tight well plugs and PVC well caps.
- Peristaltic pump and tubing, with 12V power source.
- Spill containment equipment.
- Portable waste water tank.
- Spare vault gaskets.
- Wire and plastic cleaning brush.
- 5 gallon bucket with lid.
- Deionized (DI) water supply.
- Alconox solution.
- Separate spray bottles for Alconox solution and DI water.
- Rags/paper towels.
- Environmentally compliant bolt thread lubricant.
- Mirror/flashlight.
- Tile sponge.
- Wet-Dry vacuum.
- Drop cloth.
- Corrosion-inhibiting primer or paint of site-approved color, and paintbrush.
- Concrete mix and tools (corrosive-resistant concrete may be required if the location is in saline soils).
- Bentonite or cement grout.
- Sonotube concrete collar form (for wells in or near active washes).
- Material for constructing concrete forms for standard well pads (2” x 8” wooden planks and nails).
- Camera.

4 Preparation & Setup

- Review event-specific field instructions and HSP.
- Ensure that the WLI has been decontaminated (check for label/tag) or decontaminate as needed with DI water, Alconox solution, etc. following SOP-A10, *Decontamination of Water Sampling Equipment.*
- Initiate field logbook for field activity.
- Inspect all equipment and calibrate WLIs if multiple meters are being used according to SOP-A9, *Calibration of Field Instruments*.
- If a transducer is present in the well and it is necessary to remove the transducer to allow well access, first note the exact position of the transducer (documenting it with a photograph if needed) and refer to SOP-C1, *Solinst Pressure Transducers,* before proceeding.

5 Procedure for Well Inspection

- Upon arrival at the monitoring well, confirm the well ID on both the interior and exterior of the well.
- Photograph the outside of the well to depict the state of the traffic poles (if applicable), concrete pad, and steel casing or well vault.
- Photograph the inside of the steel well casing or well vault to document the presence or absence of well caps, fill sand, water in the annulus, etc.
- Complete the Well Inspection Log provided as an attachment to this SOP noting any anomalies or abnormalities.
- Complete any needed repairs that can be performed at the time of the inspection.
  - Document repairs in the Well Inspection Log and photograph the well again after any repairs are completed.
  - Report any repairs that remain to be completed to the on-site field coordinator and note on the Well Inspection Log.
- Total depth of each well should be measured annually (typically during the second quarter) following SOP-A11, *Total Depth Measurements*.
  - If more than 10 percent of the screened interval is blocked by sediment, attempt redevelopment of the well (see Well O&M Manual)
  - If there is a change in the performance of a well relative to historical purge data, contact the field coordinator to begin evaluating the reason for the change and identifying appropriate actions in response to the change.
- Lock out/tag out wells in disrepair that should not be sampled until repaired (e.g., developed).
- Following inspection of all wells, prepare a repair checklist to track the status of any needed well repairs.

6 Procedures for Well Repair

Replacing Well Identification Markings

- Upon arrival at the monitoring well, confirm the well ID on both the interior and exterior of the well.
- Clean surface to be marked with a brush or wet cloth.

- Mark the surface with the well name(s) using a permanent paint pen in a clear and legible fashion. Paint markers are used to label metal or concrete surfaces and are the most durable write-on marking tool for exterior use. Sharpie markers are used to label PVC surfaces inside the protective casing.
- Check aluminum tags which show well ID for legibility and clean or replace as needed.
- If the well does not have an aluminum tag as a backup identification to other markings, install a tag. Indent the tag with the well ID by writing on it with a ballpoint pen and then attach it inside the protective cover, secured around the PVC well casing with a "zip-tie" wiring tie or similar means.

Removing Water from Well Annulus (Flush Mounts)

Following are procedures for removing water/liquid that has collected within a flush mount well. The intent is to avoid water/liquid flowing into the well once the cap is removed.

Method 1 – Peristaltic Pump

- Place spill containment according to SOP-A13, *Spill Prevention, Containment, and Control Measures for Monitoring Well Sampling*.
- Place peristaltic pump on the containment such that water can be removed from the annulus and pumped into the portable waste water tank.
- Insert one end of the peristaltic pump tubing into the water in the annulus and secure the other end of the tubing in the portable waste water tank.
- Pump the water out of the annulus without removing any sand or soil.
- After removing water, clean annulus with rag or paper towel if possible.

Method 2 – Wet/Dry Vacuum

- Place spill containment according to SOP-A13, *Spill Prevention, Containment, and Control Measures for Monitoring Well Sampling.*
- Place wet-dry vacuum and generator on spill containment.
- Remove water from the annulus with the vacuum without removing any sand or soil.
- Dump removed water into a waste water tank for disposal.
- After removing water, clean annulus with a rag or paper town if possible.

Method 3 – Absorbent Sponge

- Place spill containment according to SOP-A13, *Spill Prevention, Containment, and Control Measures for Monitoring Well Sampling.*
- Place a 5 gallon bucket and lid on the spill containment.
- Use an absorbent sponge to soak up water in the annulus. Wring sponge out into the bucket and repeat as necessary.
- Dump removed water into a waste water tank for disposal.

Repairing a Broken Hinge on Steel Well Casings

- Drill a 3/8-in. hole in the top of the well casing lid.
- Thread a piece of chain through the hinge loop on the side of the well casing.
- Fasten the chain to the well casing lid by inserting a 5/16-in. carriage bolt through both ends of the chain and through the hole drilled in the top of the well casing lid.

- Secure the carriage bolt on the inside of the well casing lid with a washer and lock nut, or a nut and lock washer, as shown in the photos below.





Installing or Supplementing Sand/Pea Gravel in Well Annulus

- Place spill containment according to SOP-A13, *Spill Prevention, Containment, and Control Measures for Monitoring Well Sampling.*
- If not already installed, place a water-tight expansion well plug in the casing to seal off the well, or place a slip cap over the PVC casing.
- Pour clean sand or pea gravel into the annulus until the top of the material is within approximately one foot of the top of the PVC well casing.

Removing Rust Scale from the Interior of a Steel Conductor Casing

- Place spill containment according to SOP-A13, *Spill Prevention, Containment, and Control Measures for Monitoring Well Sampling.*
- If not already installed, place a water-tight expansion well plug in the PVC casing to seal off the well. Remove any transducers and transducer caps as necessary.
- Remove loose rust scale to a depth of at least 0.5 to 1 foot below the top of the well casing manually or with a wet-dry vacuum.
- Remove additional rust on the interior of the casing with a wire brush or other abrasive or scraping tool such as putty knife, cold chisel or slotted screwdriver.
- Place drop cloth or similar cover(s) to intercept paint drips inside the annulus and use drop cloth or spill containment on the surface pad.
- Paint the interior of the casing with primer (use site-approved color) to reduce future rust erosion.
- Wait for paint to develop tack (begin drying), then remove drop cloths and replace well plug, cap, and transducer.

Repairing Concrete Well Pad

- The following procedure is for wells located on upland areas, or floodplain areas located along and east of National Trails Highway. Wells located within washes may require an alternative, deeper-set concrete pad. Before working in a wash, check with the field coordinator and PG&E field inspector to determine whether specific agency notifications or approvals are required before beginning the work. Wells near active portions of wash channels may use a modified well pad design installed as a Sonotube-formed concrete collar that extends deeper than those used for upland and floodplain wells and is more resistant to damage during flood events. For further details see the procedure below in the “Replacing Concrete Pad with Concrete Collar Reinforcement for Wells in Washes” section.

- Perform necessary site clearance activities (US Alert and coordination with PG&E TCS are minimum actions).
- Remove and properly dispose of the damaged concrete well pad and level the exposed ground at least 4 in. below the surrounding ground surface.
- Construct a concrete form extending at least 2 ft. in diameter from the edge of the exterior steel casing and at least 4 in. thick.
- Mix concrete according to manufacturer's instructions. Utilize corrosive resistant concrete (e.g. type V) if the location is in saline soils (such as locations close to current or former areas of salt cedar vegetation).
- Pour concrete mixture into the previously constructed form, smooth the top of the concrete to create a surface that slopes away from the well casing, and allow the pad to cure for at least 24 hours before disturbing the well or removing forms.

Replacing Steel Protective Casing

- Perform necessary site clearance activities (US Alert and coordination with PG&E TCS are minimum actions).
- Assess annular space: is it feasible to remove the existing protective casing without damage to the inner PVC well casing? If not then evaluate other measures such as installation of an outer sleeve as the replacement steel protective casing, anchored by a new well pad as described above.
- Remove any existing concrete pad surrounding the conductor casing.
- Excavate to the bottom of the conductor casing. If casing is set deeper than 4 ft. below ground surface (bgs), cut off the conductor casing at the 4 ft. level.
- Remove steel conductor casing.
- Inspect the annular seal around the PVC well casing. If damaged, replace or amend with bentonite or cement grout.
- Replace steel protective casing. Use a level to check that the new casing is plumb. Position the new protective casing so that the PVC well casing(s) are centered, then cement the new protective casing into place to the ground surface.
- Construct a concrete form extending at least 2 ft. in diameter from the edge of the steel casing and at least 4 in. thick.
- Mix concrete according to manufacturer's instructions. Utilize corrosive resistant concrete if the location is in saline soils.
- Pour concrete mixture into the previously constructed form, smooth the top of the concrete to create a surface that slopes away from the well casing and cure for at least 24 hours before disturbing the well or removing forms.
- Fill the annulus with filter pack sand or pea gravel to within one foot of the top of the PVC well casing, as described above.

Replacing Concrete Pad with Concrete Collar Reinforcement for Wells in Washes

- Perform necessary site clearance activities (US Alert and coordination with PG&E TCS are minimum actions).
- Remove any existing concrete pad surrounding the conductor casing.

- Excavate to the bottom of the conductor casing, or at least 4 ft. bgs.
- Inspect the annular seal around the PVC well casing. If damaged, replace or amend with bentonite or cement grout.
- Place a piece of Sonotube concrete form over the steel conductor casing. Sonotube should be a minimum of 6 in. larger in diameter than the conductor casing. Sonotube should extend above ground surface a minimum of 4 in.
- Mix concrete according to manufacturer's instructions. Utilize corrosive resistant concrete if necessary.
- Pour concrete mixture into the Sonotube form, smooth the top of the concrete to create a surface that slopes away from the well casing, and cure for at least 24 hours before disturbing the well or removing the form.
- Backfill around the newly placed concrete collar with previously excavated material.
- See diagram below taken from the *Final Revised Implementation Plan for Repair of Monitoring Wells MW-38S and MW-38D and Old Well/Pipe Reconnaissance (2011)*.

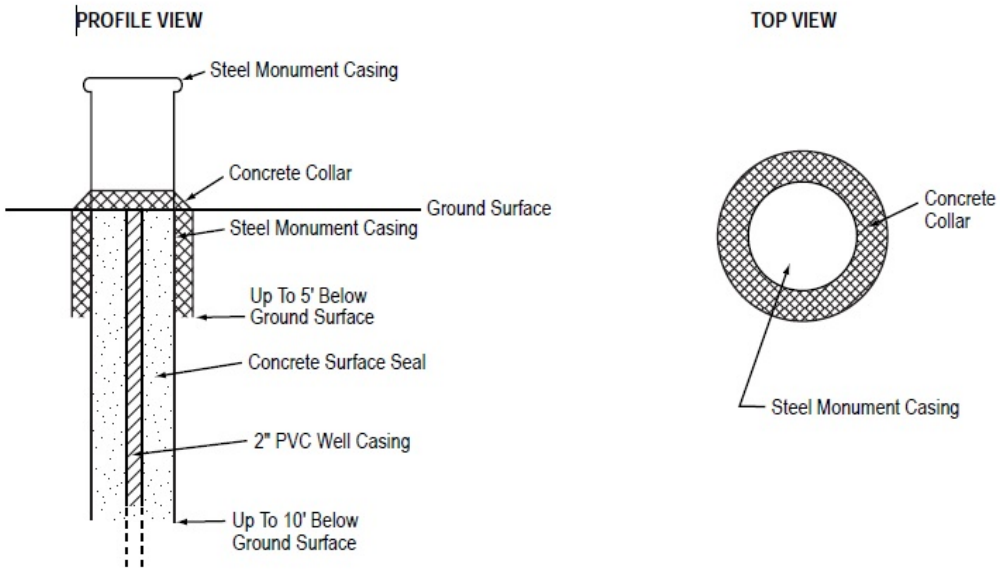

Note: *Not to scale*

7 Well Inspection, Maintenance, and Repair Reporting And Documentation Requirements

- Inspection findings and repair actions will be included in the groundwater monitoring reports. This will include when the repair action was completed, or is planned to be completed, and next steps as appropriate. Photographs will be included if appropriate.
- At a minimum, the completed well inspection log will be included with quarterly groundwater monitoring reports to document inspection results and maintenance performed for the reporting period.

- Report the inspection results to the field coordinator and project manager. The project manager will notify California Environmental Protection Agency, Department of Toxic Substances Control (DTSC) of wells found to be damaged or destroyed to an extent prohibiting routine groundwater sampling prior to beginning the next sampling event. The project manager will also inform DTSC of progress of redevelopment or repair (typically via e-mail and in regular monitoring compliance reports).

Well Inspection Log

WELL INSPECTION LOG

Project Name: PG&E Topock

Staff: _____

Well/ Piezometer	Inspection Date	Survey Mark Present? (Y/N)	Standing or Ponded Water? (Y/N)	Lock in Place? (Y/N)	Evidence of Well Subsidence? (Y/N)	Well Labeled on Casing or Pad? (Y/N)	Traffic Poles Intact? (Y/N)	Concrete Pad Intact? (Y/N)	Erosion Around Wellhead? (Y/N)	Steel Casing Intact? (Y/N)	PVC Cap Present? (Y/N)	Standing Water in Annulus? (Y/N)	Well Casing Intact? (Y/N)	Photo File Number	Notes/Actions	Action Completed (Y/N)	Action Completed Date
CW-1D																	
CW-1M																	
CW-2D																	
CW-2M																	
CW-3D																	
CW-3M																	
CW-4D																	
CW-4M																	
MW-01																	
MW-03																	
MW-04																	
MW-05																	
MW-06																	
MW-07																	
MW-08																	
MW-09																	
MW-10																	
MW-11																	
MW-12																	
MW-13																	
MW-14																	
MW-15																	
MW-16																	

Notes Key:
1 - RFID tag in place.
2 - Traffic Poles not needed due to well location/construction.
3 - Hinge damaged.
4 - PVC cap not present due to transducer hanger.
5 - PVC cap not present due to dedicated pump tubing/cables in well.

WELL INSPECTION LOG

Project Name: PG&E Topock

Staff: _____

Well/ Piezometer	Inspection Date	Survey Mark Present? (Y/N)	Standing or Ponded Water? (Y/N)	Lock in Place? (Y/N)	Evidence of Well Subsidence? (Y/N)	Well Labeled on Casing or Pad? (Y/N)	Traffic Poles Intact? (Y/N)	Concrete Pad Intact? (Y/N)	Erosion Around Wellhead? (Y/N)	Steel Casing Intact? (Y/N)	PVC Cap Present? (Y/N)	Standing Water in Annulus? (Y/N)	Well Casing Intact? (Y/N)	Photo File Number	Notes/Actions	Action Completed (Y/N)	Action Completed Date
MW-17																	
MW-18																	
MW-19																	
MW-20-070																	
MW-20-100																	
MW-20-130																	
MW-21																	
MW-22																	
MW-23-060 MW-23-080																	
MW-24 BR																	
MW-24A																	
MW-24B																	
MW-25																	
MW-26																	
MW-27-020																	
MW-27-060																	
MW-27-085																	
MW-28-025																	
MW-28-090																	
MW-29																	
MW-30-030																	
MW-30-050																	
MW-31-060																	

Notes Key:
1 - RFID tag in place.
2 - Traffic Poles not needed due to well location/construction.
3 - Hinge damaged.
4 - PVC cap not present due to transducer hanger.
5 - PVC cap not present due to dedicated pump tubing/cables in well.

WELL INSPECTION LOG

Project Name: PG&E Topock

Staff: _____

Well/ Piezometer	Inspection Date	Survey Mark Present? (Y/N)	Standing or Ponded Water? (Y/N)	Lock in Place? (Y/N)	Evidence of Well Subsidence? (Y/N)	Well Labeled on Casing or Pad? (Y/N)	Traffic Poles Intact? (Y/N)	Concrete Pad Intact? (Y/N)	Erosion Around Wellhead? (Y/N)	Steel Casing Intact? (Y/N)	PVC Cap Present? (Y/N)	Standing Water in Annulus? (Y/N)	Well Casing Intact? (Y/N)	Photo File Number	Notes/Actions	Action Completed (Y/N)	Action Completed Date
MW-31-135																	
MW-32-020																	
MW-32-035																	
MW-33-150																	
MW-33-210																	
MW-33-40																	
MW-33-90																	
MW-34-055																	
MW-34-100																	
MW-34-100																	
MW-35-135																	
MW-35-60																	
MW-36-020 MW-36-070																	
MW-36-090 MW-36-040																	
MW-36-050 MW-36-100																	
MW-37D																	
MW-37S																	
MW-38S MW-38D																	
MW-39-040 MW-39-070																	
MW-39-050 MW-39-080																	
MW-39-060 MW-39-100																	
MW-40D																	
MW-40S																	

Notes Key:
1 - RFID tag in place.
2 - Traffic Poles not needed due to well location/construction.
3 - Hinge damaged.
4 - PVC cap not present due to transducer hanger.
5 - PVC cap not present due to dedicated pump tubing/cables in well.

WELL INSPECTION LOG

Project Name: PG&E Topock

Staff: _____

Well/ Piezometer	Inspection Date	Survey Mark Present? (Y/N)	Standing or Ponded Water? (Y/N)	Lock in Place? (Y/N)	Evidence of Well Subsidence? (Y/N)	Well Labeled on Casing or Pad? (Y/N)	Traffic Poles Intact? (Y/N)	Concrete Pad Intact? (Y/N)	Erosion Around Wellhead? (Y/N)	Steel Casing Intact? (Y/N)	PVC Cap Present? (Y/N)	Standing Water in Annulus? (Y/N)	Well Casing Intact? (Y/N)	Photo File Number	Notes/Actions	Action Completed (Y/N)	Action Completed Date
MW-41D																	
MW-41M																	
MW-41S																	
MW-42-030																	
MW-42-055																	
MW-42-065																	
MW-43-025																	
MW-43-075																	
MW-43-090																	
MW-44-125 MW-44-070																	
MW-44-115																	
MW-45-095a MW-45-095b																	
MW-46-175 MW-46-205																	
MW-47-055 MW-47-115																	
MW-48																	
MW-49-275 MW-49-365																	
MW-50-095 MW-50-200																	
MW-51																	
MW-52																	
MW-53																	
MW-54-140 MW-54-195																	
MW-55-045 MW-55-120																	
MW-56 D/S/M																	

Notes Key:
1 - RFID tag in place.
2 - Traffic Poles not needed due to well location/construction.
3 - Hinge damaged.
4 - PVC cap not present due to transducer hanger.
5 - PVC cap not present due to dedicated pump tubing/cables in well.

WELL INSPECTION LOG

Project Name: PG&E Topock

Staff: _____

Well/ Piezometer	Inspection Date	Survey Mark Present? (Y/N)	Standing or Ponded Water? (Y/N)	Lock in Place? (Y/N)	Evidence of Well Subsidence? (Y/N)	Well Labeled on Casing or Pad? (Y/N)	Traffic Poles Intact? (Y/N)	Concrete Pad Intact? (Y/N)	Erosion Around Wellhead? (Y/N)	Steel Casing Intact? (Y/N)	PVC Cap Present? (Y/N)	Standing Water in Annulus? (Y/N)	Well Casing Intact? (Y/N)	Photo File Number	Notes/Actions	Action Completed (Y/N)	Action Completed Date
MW-57-050																	
MW-57-070																	
MW-57-185																	
MW-58BR																	
MW-58-065																	
MW-60-125																	
MW-60-245																	
MW-61-110																	
MW-62-110 MW-62-190																	
MW-62-065																	
MW-63-065																	
MW-64-BR																	
MW-65-160 MW-65-225																	
MW-66-165 MW-66-230																	
MW-66BR-270																	
MW-67-185																	
MW-67-225 MW-67-260																	
MW-68BR																	
MW-68-180 MW-68-290																	
MW-69-195																	
MW-70BR-225																	
MW-70-065																	
MW-71																	

Notes Key:
1 - RFID tag in place.
2 - Traffic Poles not needed due to well location/construction.
3 - Hinge damaged.
4 - PVC cap not present due to transducer hanger.
5 - PVC cap not present due to dedicated pump tubing/cables in well.

WELL INSPECTION LOG

Project Name: PG&E Topock

Staff: _____

Well/ Piezometer	Inspection Date	Survey Mark Present? (Y/N)	Standing or Ponded Water? (Y/N)	Lock in Place? (Y/N)	Evidence of Well Subsidence? (Y/N)	Well Labeled on Casing or Pad? (Y/N)	Traffic Poles Intact? (Y/N)	Concrete Pad Intact? (Y/N)	Erosion Around Wellhead? (Y/N)	Steel Casing Intact? (Y/N)	PVC Cap Present? (Y/N)	Standing Water in Annulus? (Y/N)	Well Casing Intact? (Y/N)	Photo File Number	Notes/Actions	Action Completed (Y/N)	Action Completed Date
MW-72-080																	
MW-72-200																	
MW-73-080																	
MW-74																	
MWP-08																	
MWP-10																	
OW-1D																	
OW-1M																	
OW-1S																	
OW-2D																	
OW-2M																	
OW-2S																	
OW-3D																	
OW-3M																	
OW-3S																	
OW-5D																	
OW-5M																	
OW-5S																	
P2																	
PG&E-8																	
PGE-7																	
PT-1 3 WELLS																	
PT-2																	

Notes Key:
1 - RFID tag in place.
2 - Traffic Poles not needed due to well location/construction.
3 - Hinge damaged.
4 - PVC cap not present due to transducer hanger.
5 - PVC cap not present due to dedicated pump tubing/cables in well.

WELL INSPECTION LOG

Project Name: PG&E Topock

Staff: _____

Well/ Piezometer	Inspection Date	Survey Mark Present? (Y/N)	Standing or Ponded Water? (Y/N)	Lock in Place? (Y/N)	Evidence of Well Subsidence? (Y/N)	Well Labeled on Casing or Pad? (Y/N)	Traffic Poles Intact? (Y/N)	Concrete Pad Intact? (Y/N)	Erosion Around Wellhead? (Y/N)	Steel Casing Intact? (Y/N)	PVC Cap Present? (Y/N)	Standing Water in Annulus? (Y/N)	Well Casing Intact? (Y/N)	Photo File Number	Notes/Actions	Action Completed (Y/N)	Action Completed Date
PT-2 3 WELLS																	
PT-3 3 WELLS																	
PT-4 3 WELLS																	
PT-5 3 WELLS																	
PT-6 3 WELLS																	
PT-7 S/D																	
PT-7M																	
PT-8 S/D																	
PT-8M																	
PT-9 S/D																	
PT-9M																	
PTI-1D																	
PTI-1M																	
PTI-1S																	
TW-01																	
TW-04																	
TW-05																	

Notes Key:
1 - RFID tag in place.
2 - Traffic Poles not needed due to well location/construction.
3 - Hinge damaged.
4 - PVC cap not present due to transducer hanger.
5 - PVC cap not present due to dedicated pump tubing/cables in well.

Standard Operating Procedure
PG&E Topock Remedy-produced Water Conditioning Plant Operation and Maintenance Plan

Title: System "Hot" Startup and Shutdown

Number: RTP-SOP-01_Rev1

Created Date: 12/19/13

1 Background and Scope

Pacific Gas and Electric Company (PG&E) is implementing a groundwater remedy near the intersection of Park Moabi Road and Interstate 40, approximately 12 miles southeast of Needles, California at the PG&E Topock Compressor Station (TCS). The Remedy-produced Water Conditioning Plant (RTP) will treat the water produced by the groundwater remedy prior to re-use or re-injection onsite.

The objective of this Standard Operating Procedure (SOP) is to describe the procedures for (a.) starting up the RTP after a short-term shutdown and (b.) shutting down the RTP for a short term.

2 Drawing Numbers

- Influent Tanks 1 through 4, Instrumentation: I-11-01 through I-11-04
- Filter Systems A and B Side, Instrumentation: I-12-01 and I-12-02
- Remedy-produced Water Conditioning Systems, Instrumentation: I-12-03 and I-12-04
- Air Compressor and Seal Water System, Instrumentation: I-12-05
- Conditioned Water Storage Tanks, Instrumentation: I-14-01 and I-14-02

3 Equipment List

- Health and Safety Plan

4 Preconditions

a. System startup:

- Operators should have system training and operating experience before attempting a system startup.
- Power has been restored (if startup is occurring after a power outage).
- All master control center (MCC) breakers are energized except the "Spare Starter" and "Spare Breaker."

b. System shutdown:

- Operators should have system training and operating experience before attempting a system shutdown.
- The daily scheduled backwash and treatment processes are complete, or it is otherwise necessary to manually shutdown the RTP.

5 Procedure

a. System startup:

1. Go to HMI in the Office/Sample Room on the second floor of the Plant.
2. Ensure that the HVAC unit is ON.
3. Confirm the air compressor and air dryer/filter DRYER-RTP01-1202 are ON.
4. Confirm that seal water package system is ON.
5. Switch Influent Tank 1 recirculation pump PMP-RTP01-1101 to AUTO.
6. Switch Influent Tank 2 recirculation pump PMP-RTP01-1102 to AUTO.
7. Switch Influent Tank 3 recirculation pump PMP-RTP01-1103 to AUTO.
8. Switch Influent Tank 4 recirculation pump PMP-RTP01-1104 to AUTO.
9. Switch A Side filter feed pumps PMP-RTP01-1210 and -1220 to AUTO.
10. Switch B Side filter feed pumps PMP-RTP01-1230 and -1240 to AUTO.
11. Enable chemicals feed pumps:
    - Caustic feed pumps, PMP-RTP01-1211 and -1212
    - Coagulant feed pumps, PMP-RTP01-1221 and -1222
    - Acid feed pumps PMP-RTP01-1231 and -1232
12. Switch conditioned water transfer pumps PMP-RTP01-1405 and PMP-RTP01-1406 to AUTO.
13. Switch truck fill pump PMP-RTP01-1403 to AUTO

b. System shutdown:

1. Go to HMI in the Office/Sample Room on the second floor of the Plant.
2. Switch Influent Tank 1 recirculation pump PMP-RTP01-1101 to OFF.
3. Switch Influent Tank 2 recirculation pump PMP-RTP01-1102 to OFF.
4. Switch Influent Tank 3 recirculation pump PMP-RTP01-1103 to OFF.
5. Switch Influent Tank 4 recirculation pump PMP-RTP01-1104 to OFF.
6. Switch A Side filter feed pumps PMP-RTP01-1210 and -1220 to OFF.
7. Switch B Side filter feed pumps PMP-RTP01-1230 and -1240 to OFF.
14. Disable chemicals feed pumps:
    - Caustic feed pumps, PMP-RTP01-1211 and -1212
    - Coagulant feed pumps, PMP-RTP01-1221 and -1222
    - Acid feed pumps PMP-RTP01-1231 and -1232
8. Switch conditioned water transfer pumps PMP-RTP01-1405 and -1406 to OFF.
9. Switch truck fill pump PMP-RTP01-1403 to OFF.

Standard Operating Procedure
PG&E Topock Remedy-produced Water Conditioning Plant Operation and Maintenance Plan

Title: Batch Conditioning Process

Number: RTP-SOP-02_Rev1

Created Date: 11/25/13

1 Background and Scope

Pacific Gas and Electric Company (PG&E) is implementing a groundwater remedy near the intersection of Park Moabi Road and Interstate 40, approximately 12 miles southeast of Needles, California at the PG&E Topock Compressor Station (TCS). The Remedy-produced Water Conditioning Plant (RTP) will treat the water produced by the groundwater remedy prior to re-use or re-injection onsite.

The objective of this Standard Operating Procedure (SOP) is to describe the procedure of the RTP in "batch conditioning" mode. This mode applies only to the Remedy-produced Water A Side of the RTP.

This automated procedure is largely controlled through the SCADA/HMI.

2 Drawing Numbers

- Influent Tanks 1 through 4, Instrumentation: I-11-01 through I-11-04
- Filter System A Side, Instrumentation: I-12-01
- Remedy-produced Water Conditioning Systems, Instrumentation: I-12-03 and I-12-04
- Liquid Phase Separators, Instrumentation: I-12-05
- Conditioned Water Storage Tank Farm A Side, Instrumentation: I-14-01

3 Equipment List

- Appropriate PPE
- Health and Safety Plan

4 Preconditions

Designated influent tank(s) (TNK-RTP01-1101; TNK-RTP01-1102; TNK-RTP01-1103; TNK-RTP01-1104) water level is full or backwash pumps have completed their designated cycles.

5 Procedure

1. The SCADA will control the tanks and equipment configuration per the backwashing schedule. The procedure begins once the Preconditions are met.

2. pH Adjustment with caustic (if needed): Caustic feed pump (PMP-RTP01-1211; PMP-RTP01-1212) will draw from TNK-RTP01-1212 to add caustic. Recirculation pump (PMP-RTP01-1101; PMP-RTP01-1102; PMP-RTP01-1103; PMP-RTP01-1104) will mix water in influent tank for 30 minutes.
3. Coagulant addition (if needed): Coagulant feed pump (PMP-RTP01-1221; PMP-RTP01-1222) will draw from TNK-RTP01-1220 to add coagulant. Recirculation pump will mix water in influent tank (PMP-RTP01-1101; PMP-RTP01-1102; PMP-RTP01-1103; PMP-RTP01-1104) for 30 minutes.
4. pH Adjustment with acid (if needed): Acid feed pump (PMP-RTP01-1231; PMP-RTP01-1232) will draw from TNK-RTP01-1230 to add acid. Recirculation pump (PMP-RTP01-1101; PMP-RTP01-1102; PMP-RTP01-1103; PMP-RTP01-1104) will mix water in influent tank for 30 minutes.
5. Solids settling time (90 minutes). Recirculation pump (PMP-RTP01-1101; PMP-RTP01-1102; PMP-RTP01-1103; PMP-RTP01-1104) will be off.
6. Sludge draw (15 minutes) with PMP-RTP01-1201 drawing from designated tank(s).
7. The filter feed pumps (PMP-RTP01-1210, PMP-RTP01-1220) will move the water to the Conditioned Water Tank Farm (TNK-RTP01-1401; TNK-RTP01-1402) (Remedy A-side).

Standard Operating Procedure
PG&E Topock Remedy-produced Water Conditioning Plant Operation and Maintenance Plan

Title: Continuous Conditioning Process

Number: RTP-SOP-03_Rev1

Created Date: 11/25/13

1 Background and Scope

Pacific Gas and Electric Company (PG&E) is implementing a groundwater remedy near the intersection of Park Moabi Road and Interstate 40, approximately 12 miles southeast of Needles, California at the PG&E Topock Compressor Station (TCS). The Remedy-produced Water Conditioning Plant (RTP) will treat the water produced by the groundwater remedy prior to re-use or re-injection onsite.

The objective of this Standard Operating Procedure (SOP) is to describe the procedure of the Remedy-produced Water Conditioning system in "continuous conditioning" mode. This mode can be applied to both the Remedy-produced Water A-side and Freshwater B-side of the RTP.

This automated procedure is largely controlled through the SCADA/HMI.

2 Drawing Numbers

- Influent Tanks 1 through 4, Instrumentation: I-11-01 through I-11-04
- Filter Systems A and B Side, Instrumentation: I-12-01 and I-12-02
- Conditioned Water Storage Tank Farm A Side, Instrumentation: I-14-01
- Conditioned Water B Side, Instrumentation: I-14-02

3 Equipment List

- Appropriate PPE
- Health and Safety Plan

4 Preconditions

Designated influent tank(s) (TNK-RTP01-1101; TNK-RTP01-1102; TNK-RTP01-1103; TNK-RTP01-1104) water level is full or backwash pumps (see Backwashing Schedule) have completed their designated cycles; designated solids settling time (up to 2 hours) is complete.

5 Procedure

1. The SCADA will control the tanks and equipment configuration per the backwashing schedule. The procedure begins once the Preconditions are met.

2. The filter feed pumps (PMP-RTP01-1210, -1220, -1230, -1240) will move the water to either
   a. The Conditioned Water Tank Farm (TNK-RTP01-1401 and TNK-RTP01-1402) Remedy A Side

      or

   b. The Conditioned Water Storage Tank (TNK-RTP01-1410) Freshwater B Side

Standard Operating Procedure
PG&E Topock Remedy-produced Water Conditioning Plant Operation and Maintenance Plan

Title: Cartridge Filter Maintenance

Number: RTP-SOP-04_Rev1

Created Date: 12/21/13

1 Background and Scope

Pacific Gas and Electric Company (PG&E) is implementing a groundwater remedy near the intersection of Park Moabi Road and Interstate 40, approximately 12 miles southeast of Needles, California at the PG&E Topock Compressor Station (TCS). The Remedy-produced Water Conditioning Plant (RTP) will treat the water produced by the groundwater remedy prior to re-use or re-injection onsite.

The objective of this Standard Operating Procedure (SOP) is to describe the procedure for maintenance of cartridge filters in the filter housings on the Remedy-produced Water A Side and Freshwater B Side of the RTP. Maintenance activities include either (a.) cleaning and reinstalling cartridge filters or (b.) removing and replacing cartridge filters.

The cartridge filter manufacturer's installation and operation manual should also be referenced while performing cartridge filter maintenance.

2 Drawing Numbers

- Filter Systems A and B Side, Instrumentation: I-12-01 and I-12-02
- Liquid Phase Separator, Instrumentation: I-12-05

3 Equipment List

- Appropriate personal protective equipment (PPE)
- Health and Safety Plan
- Filter manufacturer's instruction manual
- Lockout/tagout tags and lockout/tagout manual for cartridge filter maintenance
- See Step 1 in the Procedure section below for determining the appropriate maintenance option. The necessary equipment includes:
    a. Clean and Reinstall: One 5-gallon bucket, a pressure nozzle, and a standard hose connected to a water source.
    b. Remove and Replace: One 5-gallon bucket for the spent cartridge filter, one 5-gallon bucket for the replacement cartridge filter, and the appropriate replacement cartridge filter for the filter model. Table 1 shows the micron rating for each filter type. See filter manufacturer's instruction manual for appropriate cartridge product code and cartridge dimensions.

TABLE 1
Micron Ratings For Filter Cartridges

	Filter Tag Number	Filter Type	Nominal Micron
A Side	FIL-RTP01-1211/-1221	Coarse	20
	FIL-RTP01-1212/-1222	Fine	5
B Side	FIL-RTP01-1231/-1241	Coarse	20
	FIL-RTP01-1232/-1242	Fine	5

4 Preconditions

- Human-machine interface (HMI) has prompted the operator to perform cartridge filter maintenance on a designated cartridge filter.
- The cartridge filter designated for maintenance is in standby mode.

5 Procedure

1. Determine the appropriate filter maintenance activity by checking the difference between the last operational pressure differential and start-up pressure differential in field logs. Below are the recommended actions. Operators should also verify and confirm that there are no conflicts with the actions specified in the manufacturer's manual; should a conflict arise, the operators should contact the Project Manager to resolve conflicts prior to maintenance activities.
   a. If the difference in pressure differential is between 12 and 30 pounds per square inch (psi), it is recommended that the filter be cleaned and reinstalled (choose option a. *Clean and Reinstall* in Equipment List and Step 8).
   b. If the difference in pressure differential is greater than 30 psi, it is recommended that the filter be removed and replaced (choose option b. *Remove and Replace* in Equipment List and Step 8).
2. Ensure that the actuated and manual valves between the two filter streams are closed:
   - Ensure that V-RTP01-1211 (A Side) or V-RTP01-1231 (B Side) is closed
3. Isolate the cartridge filter receiving maintenance from the piping system by closing the manual valves upstream and downstream of the filter (Table 2). Lockout/tagout the filter (see lockout/tagout manual for filter cartridges).

TABLE 2
Equipment Configuration for Isolating Filters from System (* indicates RTP01)

	Filter Out of Service	Pump Off	Closed Upstream Actuated Valve	Closed Upstream Manual Valve(s)	Closed Downstream Manual Valve(s)
A Side	FIL-*1211	PMP-*1210	--	V-*1210C, FV-*1211A	FV-*1211C, FV-*1212A
	FIL-*1212	PMP-*1210	--	FV-*1212A	FV-*1212C
	FIL-*1221	PMP-*1220	--	V-*1220C, FV-*1221A	FV-*1221C, FV-*1222A
	FIL-*1222	PMP-*1220	--	FV-*1222A	FV-*1222C

TABLE 2
Equipment Configuration for Isolating Filters from System (* indicates RTP01)

	Filter Out of Service	Pump Off	Closed Upstream Actuated Valve	Closed Upstream Manual Valve(s)	Closed Downstream Manual Valve(s)
B Side	FIL-*1231	PMP-*1230	--	V-*1230C, FV-*1231A	FV-*1231C, FV-*1232A
	FIL-*1232	PMP-*1230	--	FV-*1232A	FV-*1232C
	FIL-*1241	PMP-*1240	--	V-*1240C, FV-*1241A	FV-*1241C, FV-*1242A
	FIL-*1242	PMP-*1240	--	FV-*1242A	FV-*1242C

4. Isolate the cartridge filter receiving maintenance from its differential pressure indicator/transmitter (PDIT) by closing the manual valves upstream and downstream of its PDIT (Table 3).

TABLE 3
Manual Valves to be Closed for Isolation of Filter from DPIT (* indicates RTP01)

	Filter in Isolation	Filter DPIT	Closed Upstream DPIT Valve	Closed Downstream DPIT valve
A Side	FIL-*1211	PDIT-*1261	V-*1261C	V-*1261D
	FIL-*1212	PDIT-*1262	V-*1262C	V-*1262D
	FIL-*1221	PDIT-*1263	V-*1263A	V-*1263B
	FIL-*1222	PDIT-*1264	V-*1264A	V-*1264B
B Side	FIL-*1231	PDIT-*1265	V-*1265A	V-*1265B
	FIL-*1232	PDIT-*1266	V-*1266A	V-*1266B
	FIL-*1241	PDIT-*1267	V-*1267A	V-*1267B
	FIL-*1242	PDIT-*1269	V-*1269A	V-*1269B

5. Open the manual drain valve on the filter housing (FV-RTP01-1213, -1214, -1223, -1224, -1233, -1234, -1243, or -1244) and allow the filter housing to drain completely. The drainage should flow to the trench drains on the floor. Leave the manual drain valve open throughout the maintenance procedure.
6. Remove all wing nuts and the lid from the filter housing. The wing nuts should be removable by hand, but use hand tools if necessary.
7. Hold the cross-bar in the retainer nut and pull upward to remove the existing filter cartridge and top plate from the filter housing.
8. Based on the filter maintenance option selected in Step 1, acquire the appropriate materials (see "Equipment List" section above) and handle the cartridge filter(s) as follows:
    a. Clean and Reinstall:
        i. Inspect the existing cartridge for defects. If there are significant defects (such as pits, holes, rounds of o-rings), consider disposing of the filter and switching to the b. *Remove and Replace* option. If the filter does not have significant wear and tear, place the filter cartridge in 5-gallon bucket and carry it to the hose connected to the water source and pressure nozzle.

ii. Remove the filter from bucket and lay on the ground in an area where the excess cleaning water can drain to a trench drain on the floor.

iii. Direct spray at an angle to remove particulates. Proceed until as much particulate matter is removed as reasonably possible. Cleaning water should flow to the trench drains on the floor.

iv. If there is a need to remove oils, organic matter, algae and/or mineral deposits, see manufacturer's installation and operation manual for further instruction.

v. Rinse out 5-gallon bucket, place the clean cartridge filter inside, and carry back to filter housing.

b. Remove and Replace:

i. Place the spent filter cartridge in 5-gallon bucket.

ii. Inspect the new replacement filter cartridge for defects. Acquire a different replacement filter if substantial defects exist.

iii. (This step can alternatively be performed after Step 11) Dispose of used cartridge filter by carrying the cartridge filter in its 5-gallon bucket into the liquid-phase separator room and placing the cartridge filter into the primary liquid-phase separator (LPS-RTP01-1211 or -1212). See *RTP-SOP-06: Phase Separator Loading and Removal* for further instruction.

9. Take the cleaned or new replacement cartridge filter and place the top plate of the filter housing on top of the cartridge with clip upwards. Turn the retainer nut securely for proper seal.
10. Replace the rim gasket and lid.
11. Replace wing-nuts systematically, rotating around filter. "Finger tight" is normally sufficient.
12. Close the manual drain valve on the filter housing.
13. Reopen the manual valves that were closed in Step 3 (Table 2) and Step 4 (Table 3) to reconnect the cartridge filter to the piping system and its PDIT. Remove lockout/tagout on filter.

Standard Operating Procedure
PG&E Topock Remedy-produced Water Conditioning Plant Operations and Maintenance Plan

Title: Secondary Containment Operation in the Remedy-produced Water Conditioning Plant

Number: RTP-SOP-05_Rev1

Created Date: 5/13/14

1 Background and Scope

Pacific Gas and Electric Company (PG&E) is implementing a groundwater remedy near the intersection of Park Moabi Road and Interstate 40, approximately 12 miles southeast of Needles, California at the PG&E Topock Compressor Station (TCS). The Remedy-produced Water Conditioning Plant (RTP) will treat the water produced by the groundwater remedy prior to re-use or re-injection onsite.

The objective of this Standard Operating Procedure (SOP) is to describe the procedures for (a.) manual and (b.) automated operation of secondary containment within the RTP and associated areas. In the event of a spill, refer to the spill response procedures included in the HMBPs.

Secondary containment systems include containment trenches, sumps, sump pumps, and sump level switches with alarms to alert the operators in the event of a spill or leak. Secondary containment systems are provided for the following five areas:

1. Influent Tank Farm
2. RTP - Chemical Storage Area
3. Conditioned Water Storage Tank Farm
4. TCS Truck Fill Decontamination Pad
5. RTP - Liquid Phase Separators Area

Manual vs. automated secondary containment operation is as follows:

a. The operation of pumping down secondary containment for all of the areas above except for the RTP Liquid Phase Separators Area is performed manually. A high-level alarm should sound which would alert the operator to inspect the water level and initiate pumping of water from the secondary containment. Sump pumps have a normal pumping destination (see Table 1 below), but designated pumps can be manually activated to pump to the evaporation ponds or grit tank. Pumping to the evaporation ponds and grit tank requires coordination with TCS Operations. Water is transferred to the evaporation ponds via a connection to the TCS wastewater tank discharge line that is routed directly to the evaporation ponds.

b. The operation of the RTP Liquid Phase Separators Area secondary containment is automated. The sump pump automatically transfers drained liquids from the secondary containment to the Influent Tank Farm.

TABLE 1
Sump Pump Locations, Tag Numbers, P&ID Numbers, and Normal Pumping Destinations

Location	Sump Pump Tag Number	High-Level Alarm Tag Number	Process and Instrumentation Diagram (P&ID) Number	Normal Pumping Destinations
a. Manual Operation				
1. Influent Tank Farm	PMP-RTP01-1105	LSH-RTP01-1159	I-11-01, I-11-02, I-11-03, I-11-04	Influent Tanks
2. RTP - Chemical Storage Area	PMP-RTP01-1207	LSH-RTP01-1255	I-12-03, I-12-04	Influent Tank Farm Sump
3. Conditioned Water Storage Tank Farm	PMP-RTP01-1407	LSH-RTP01-1459	I-14-01	Influent Tank Farm Sump
4. TCS Truck Fill Station Decontamination Pad	PMP-RTP01-1408	LSH-RTP01-1455	I-14-02	Influent Tank Farm Sump
b. Automatic Operation				
5. RTP - Liquid Phase Separator Area	PMP-RTP01-1208	LSH-RTP01-1253	I-12-05	Influent Tank Farm Sump

2 Drawing Numbers

- Secondary Containment for TCS/Remedy-produced Water: G-10-01
- Influent Tanks 1 through 4, Instrumentation: I-11-01 through I-11-04
- Remedy-produced Water Conditioning Systems, Instrumentation: I-12-03 and I-12-04
- Conditioned Water Storage Tanks and TCS Truck Fill Station, Instrumentation: I-14-01 and I-14-02

3 Equipment List

a. Manual operation of secondary containment areas requires appropriate personal protective equipment (PPE). May also require handheld pH and conductivity meters.

b. Operation of secondary containment for the RTP Liquid Phase Separator Area is fully automated and therefore does not require equipment under normal operating conditions.

4 Preconditions

a. Manual operation of secondary containment areas:

- The high-level alarm in the sump pump area has been triggered (LSH-RTP01-1159, LSH-RTP01-1459, LSH-RTP01-1255, LSH-RTP01-1455).
- The manual valves are configured to pump liquids/solids from the designated sump pump to its normal pumping destination (Table 1).
- **If** PG&E has instructed for liquids to be pumped to the evaporation ponds, **the operator must notify and coordinate with TCS Operations before water is transferred.** The operator must confirm the allowable flow rate and allowable volume of liquid that may be transferred to the evaporation ponds. In addition, the discharge of water to the ponds is not allowed to occur while TCS Operations is discharging to the ponds.

b. Automated operation of the Liquid Phase Separator Area secondary containment:

- Manual valve V-RTP01-1208B is open.
- Sump pump PMP-RTP01-1208 is plugged in.

5 Procedure

a. Manual operation of secondary containment areas:

1. Influent Tank Farm (PMP-RTP01-1105)

1.1 Liquids/solids from Influent Tank Farm automatically drain to the containment trench and sump.

1.2 Sump pumps PMP-RTP01-1407, PMP-RTP01-1408, and PMP-RTP01-1207 move liquids/solids to Influent Tank Farm containment sump as needed, via manual operation as described in Steps 2, 3 and 4.

1.3 When the high-level alarm sounds for the Influent Tank Farm sump pump PMP-RTP01-1105, mobilize to the sump. Inspect the level of liquid/solids in the sump to confirm that the liquid high-level threshold has been exceeded.

1.3.1 If the liquid high-level threshold has not been exceeded, clean and troubleshoot the high-level switch using the manufacturer's instruction manual.

1.4 Confirm, based on the direction of PG&E, whether the Influent Tank Farm sump pump PMP-RTP01-1105 will pump liquids/solids to the influent tanks or to the TCS wastewater tank discharge connection.

1.5 If liquids/solids are to be pumped to the influent tanks:

1.5.1 Use the human-machine interface (HMI) to determine whether the influent tanks have the capacity for the volume of liquids/solids to be pumped from the sump. If the influent tanks do not have enough capacity, stop and contact the Maintenance Supervisor to determine how to proceed.

1.5.2 Verify that manual valve V-RTP01-1105A is open and manual valve V-RTP01-1105C is closed.

1.5.3 Plug in PMP-RTP01-1105 at the outlet.

1.5.4 After pumping of liquids/solids from sump is complete or needs to be terminated, unplug the sump pump.

1.6 If liquids/solids are to be pumped to the TCS wastewater tank discharge connection:

1.6.1 Notify and coordinate with TCS Operations before water is transferred. Confirm the allowable flow rate and allowable volume of liquid that may be transferred to the evaporation ponds.

1.6.2 Open manual valve V-RTP01-1105C and then close manual valve V-RTP01-1105A.

1.6.3 Plug in PMP-RTP01-1105 at the outlet. Keep track of the volume of liquids/solids transferred to the TCS evaporation ponds using the flow meter FM-RTP01-1181.

1.6.4 When the maximum allowable volume has been reached **or** if all liquids/solids in the sump have been pumped before the maximum allowable volume has been reached, unplug the sump pump.

1.6.5 Open manual valve V-RTP01-1105A and then close manual valve V-RTP01-1105C.

1.6.6 If liquids/solids remain in the sump (i.e., the evaporation ponds did not have capacity for all of the volume of liquids/solids or there was instruction to stop pumping before

all liquids/solids were removed), pump the remaining liquids/solids to the influent tanks by following Steps a.1.5.1 through a.1.5.4.

2. Remedy-produced Water Conditioning Plant- Chemical Storage Area (PMP-RTP01-1207)

   2.1 Liquids/solids from the Chemical Storage Area automatically drain to the containment trench and sump.

   2.2 Proceed with caution and use appropriate PPE when working in the Conditioning Systems Area secondary containment. The caustic (TNK-RTP01-1212) and acid (TNK-RTP01-1230) tanks contain hazardous chemicals, and the coagulant (TNK-RTP01-1220) tank contains concentrated chemicals that could be dangerous if consumed.

   2.3 When the high-level alarm sounds for the Chemical Storage Area sump pump PMP-RTP01-1207, mobilize to the sump. Inspect the level of liquid/solids in the sump to confirm that the liquid high-level threshold has been exceeded.

      2.3.1 If the liquid high-level threshold has not been exceeded, clean and troubleshoot the high-level switch using the manufacturer's instruction manual.

   2.4 Visually inspect whether the accumulation in secondary containment is a spill from one of the chemical storage tanks (TNK-RTP01-1212, -1220, or -1230). If the accumulation appears to be from a chemical storage tank, check the pH and conductivity of the accumulation using handheld meters. If the pH is less than or equal to 2 or greater than or equal to 12.5, it is considered a corrosive hazardous waste, and will need to be containerized or neutralized before proceeding.

      2.4.1 Inspect the Influent Tank Farm sump to determine whether it has capacity for the liquids/solids to be pumped from the Chemical Storage Area. If the Influent Tank Farm sump does not have enough capacity, do not proceed and contact the Maintenance Supervisor for direction.

      2.4.2 Verify that manual valve is open and manual valve V-RTP01-1207A is closed.

      2.4.3 Plug in PMP-RTP01-1207 at the outlet.

      2.4.4 After pumping of liquids/solids from sump is complete or needs to be terminated, unplug the sump pump.

      2.4.5 Slowly transfer liquids/solids from the Influent Tank Farm sump to the influent tanks or TCS evaporation ponds as instructed in Steps a.1.4 through a.1.5/a.1.6. Alternatively, if the release is a large quantity (determined by the Maintenance Supervisor), recover the material and store in drums. If the release is a small quantity, use absorbent material to soak up the release.

3. Conditioned Water Storage Tank Farm (PMP-RTP01-1407)

   3.1 Liquids/solids from the Conditioned Water Storage Tank Farm automatically drain to the containment trench and sump.

   3.2 When the high-level alarm sounds for the Conditioned Water Storage Tank Farm sump pump PMP-RTP01-1407, mobilize to the sump. Inspect the level of liquid/solids in the sump to confirm that the liquid high-level threshold has been exceeded.

      3.2.1 If the liquid high-level threshold has not been exceeded, clean and troubleshoot the high-level switch using the manufacturer's instruction manual.

3.3 Confirm, based on the direction of PG&E, whether the Conditioned Water Storage Tank Farm sump pump PMP-RTP01-1407 will pump liquids/solids to the Influent Tank Farm or to the TCS evaporation ponds.

3.4 If liquids/solids are to be pumped to the Influent Tank Farm:

3.4.1 Inspect the Influent Tank Farm sump to determine whether it has capacity for the liquids/solids to be pumped from the Conditioned Water Storage Tank Farm. If the Influent Tank Farm does not have enough capacity, do not proceed and contact the Maintenance Supervisor for direction.

3.4.2 Verify that manual valve V-RTP01-1407B is open and manual valve V-RTP01-1407D is closed.

3.4.3 Plug in PMP-RTP01-1407 at the outlet.

3.4.4 After pumping of liquids/solids from sump is complete or needs to be terminated, unplug the sump pump.

3.4.5 Transfer liquids/solids from the Influent Tank Farm sump to the influent tanks or TCS evaporation ponds as instructed in Steps a.1.4 through a.1.5/a.1.6.

3.5 If liquids/solids are to be pumped to the TCS evaporation ponds:

3.5.1 Notify and coordinate with TCS Operations before water is transferred. Confirm the allowable flow rate and allowable volume of liquid that may be transferred to the evaporation ponds.

3.5.2 Open manual valve V-RTP01-1407D and then close manual valve V-RTP01-1407B.

3.5.3 Plug in PMP-RTP01-1407 at the outlet. Keep track of the volume of liquids/solids transferred to the TCS evaporation ponds using the flow meter FM-RTP01-1472.

3.5.4 When the maximum allowable volume has been reached **or** if all liquids/solids in the sump have been pumped before the maximum allowable volume has been reached, unplug the sump pump.

3.5.5 Open manual valve V-RTP01-1407B and then close manual valve V-RTP01-1407D.

3.5.6 If liquids/solids remain in the sump (i.e., the evaporation ponds did not have capacity for all of the volume of liquids/solids or there was instruction to stop pumping before all liquids/solids were removed), pump the remaining liquids/solids to the Influent Tank Farm as instructed in Steps a.3.4.1 through a.3.4.5.

4. TCS Truck Fill Decontamination Pad (PMP-RTP01-1408)

4.1 Liquids/solids from truck decontamination pad automatically drain to the containment trench and sump.

4.2 When the high-level alarm sounds for the TCS Truck Fill Decontamination Pad sump pump PMP-RTP01-1408, mobilize to the sump. Inspect the level of liquid/solids in the sump to confirm that the liquid high-level threshold has been exceeded.

4.2.1 If the liquid high-level threshold has not been exceeded, clean and troubleshoot the high-level switch using the manufacturer's instruction manual.

4.3 Confirm, based on the direction of PG&E, whether sump pump PMP-RTP01-1408 will pump liquids/solids to the Influent Tank Farm or to the grit tank.

4.4 If liquids/solids are to be pumped to the Influent Tank Farm:

4.4.1 Inspect the Influent Tank Farm sump to determine whether it has capacity for the liquids/solids to be pumped from the truck decontamination pad. If the Influent Tank Farm does not have enough capacity, do not proceed and contact the Maintenance Supervisor for direction.

4.4.2 Verify that manual valve V-RTP01-1411A is open and manual valve V-RTP01-1411B is closed.

4.4.3 Plug in PMP-RTP01-1408 at the outlet.

4.4.4 After pumping of liquids/solids from sump is complete or needs to be terminated, unplug the sump pump.

4.4.5 Transfer liquids/solids from the Influent Tank Farm sump to the influent tanks or TCS evaporation ponds as instructed in Steps a.1.4 through a.1.5/a.1.6.

4.5 If liquids/solids are to be pumped to the grit tank:

4.5.1 Notify and coordinate with TCS Operations before water is transferred. Confirm the allowable flow rate and allowable volume of liquid that may be transferred to the grit tank.

4.5.2 Open manual valve V-RTP01-1411B and then close manual valve V-RTP01-1411A.

4.5.3 Plug in PMP-RTP01-1408 at the outlet. Keep track of the volume of liquids/solids transferred to the grit tank using the flow meter FE/FIT-RTP01-1474.

4.5.4 When the maximum allowable volume has been reached **or** if all liquids/solids in the sump have been pumped before the maximum allowable volume has been reached, unplug the sump pump.

4.5.5 Open manual valve V-RTP01-1411A and then close manual valve V-RTP01-1411B.

4.5.6 If liquids/solids remain in the sump (i.e., the grit tank did not have capacity for all of the volume of liquids/solids or there was instruction to stop pumping before all liquids/solids were removed), pump the remaining liquids/solids to the Influent Tank Farm as instructed in Steps a.4.4.1 through a.4.4.5.

b. Automated operation of the liquid phase separator secondary containment area (PMP-RTP01-1208):

1. Liquids/solids from the liquid phase separators automatically drain to containment trench and sump.
2. Sump pump PMP-RTP01-1208 automatically moves liquids/solids from the sump to the Influent Tank Farm containment trench/sump.

Standard Operating Procedure
PG&E Topock Remedy-produced Water Conditioning Plant Operation and Maintenance Plan

Title: Phase Separator Loading and Removal

Number: RTP-SOP-06_Rev1

Created Date: 12/19/13

1 Background and Scope

Pacific Gas and Electric Company (PG&E) is implementing a groundwater remedy near the intersection of Park Moabi Road and Interstate 40, approximately 12 miles southeast of Needles, California at the PG&E Topock Compressor Station (TCS). The Remedy-produced Water Conditioning Plant (RTP) will treat the water produced by the groundwater remedy prior to re-use or re-injection onsite. Solids filtered in the conditioning process will be transferred to the liquid phase separators with a solids pump. Liquid from the phase separators will be recycled using a sump pump to the influent tank farm.

The objective of this Standard Operating Procedure (SOP) is to describe the procedures for (a.) loading spent filter cartridges and solid wastes from sampling to the liquid phase separators for dewatering, (b.) removing liquid phase separators from the system, and (c.) loading liquid phase separators to the system.

2 Drawing Numbers

- First Floor Plan: M-12-01
- Liquid Phase Separators, Instrumentation: I-12-05

3 Equipment List

- Appropriate PPE
- Health and Safety Plan
- Ladder
- Tool for opening/closing the liquid phase separators from the ground level
- (a.) Loading spent filter cartridges and other solid wastes to liquid phase separator also requires a 5-gallon bucket containing the object(s) to be loaded

4 Preconditions

a. Loading spent filter cartridges and other solid wastes to liquid phase separator:
    - The primary phase separator in use (LPS-RTP01-1211, LPS-RTP01-1212) is below high-level set point (LSH-RTP01-1251, LSH-RTP01-1252).

- The plant is not operating in batch processing mode while the phase separator is intended to be loaded. If plant is operating in batch processing mode, wait until the system has completed pumping sludge to the phase separator in the batch conditioning cycle.

b. Removing liquid phase separator from process system:

- The human-machine interface (HMI) has indicated that one of the liquid phase separators (LPS-RTP01-1211, -1212) has reached its high-level set point (LSH-RTP01-1251, -1252).

c. Loading liquid phase separator to process system:

- New liquid phase separator has been transported to its designated location.

5 Procedure

a. Loading spent filter cartridges and other solid wastes to liquid phase separator:

1. Mobilize to the liquid phase separator with the spent cartridge filter and/or other solid wastes to be loaded in a 5-gallon bucket.
2. Make sure there is a non-hazardous waste label showing accumulation “start” date on front end of liquid phase separator. If no label is present, apply a non-hazardous waste label and fill in the accumulation “start” date.
3. Open the lid of the liquid phase separator from the ground level using the designated tool.
4. Check that the ladder adjacent to the liquid phase separator is secure. Pick up bucket containing filter or solid waste and carefully ascend the ladder to reach the top of the phase separator. Maintain proper balance on the ladder.
5. Carefully pour contents of bucket through the opening.
6. Maintain balance on the ladder while descending.
7. Close the lid of the liquid phase separator from the ground level using the designated tool.

b. Removing liquid phase separator from process system:

1. Mobilize to the liquid phase separator to be removed from the system.
2. Make sure there is a non-hazardous waste label showing accumulation “start” date on front end of liquid phase separator; fill in the accumulation “end” date on the non-hazardous waste label.
3. Inspect the exterior of the liquid phase separator to ensure that there are no leaks or other potential hazards.
4. Locate the manual valve located upstream of the liquid phase separator (V-RTP01-1211H, -1212J), which is physically found above the liquid phase separator on the line coming from the solids pump (PMP-RTP01-1201).
5. If necessary, move the ladder located adjacent the liquid phase separator directly beneath the upstream valve. Ensure the ladder is secure. Carefully ascend the ladder.
6. Close the manual upstream valve.
7. Carefully descend the ladder.
8. Open the lid of the liquid phase separator from the ground level using the designated tool.
9. Move the ladder near the high-level switch indicator (LSH-RTP01-1251, -1252). Carefully ascend the ladder.
10. Dismount the high-level switch indicator.

11. Carefully descend the ladder. Store the high-level switch indicator in a safe and dry place until the new liquid phase separator is loaded to the system.
12. Close the lid of the liquid phase separator from the ground level using the designated tool.
13. Locate the hose by which liquid drains from the separator to the floor.
    i. Inspect the length of the hose to ensure there are no kinks or obstructions to flow throughout.
    ii. Check the outlet of the hose and verify that no liquid is draining from hose.
    iii. If there is flow and/or other evidence that dewatering is still occurring in the separator, wait until dewatering is complete before proceeding to the next step.
14. Go to the connection between the outlet of the separator and the hose. Close the manual valve (V-RTP01-1211I, -1212K) between the separator and the cam lock fitting.
15. Carefully disconnect the hose from the outlet of the separator via the cam lock fitting.
16. Cover the outlet with the cam lock plug that is attached to the outlet of the liquid phase separator. Ensure the cam lock plug is secure.
17. Ensure that all liquid drains out of the disconnected hose. Then connect the two ends of those hose together using the fittings and tidily stack the hose near the liquid phase separator.
18. Inspect and clear the area surrounding the liquid phase separator so it is easily and safely accessible by the vehicle that will remove the liquid phase separator.

c. Loading liquid phase separator to process system:
    1. Obtain the hose to be attached to the outlet of the liquid phase separator. Inspect the hose and verify it is in appropriate condition.
    2. Remove the cam lock plug that is attached to the outlet of the liquid phase separator, if applicable. Hang or place the plug nearby.
    3. Carefully attach the hose to the cam lock fitting on the outlet of the separator. Ensure the connection is secure.
    4. Ensure the hose drains within the secondary containment and there are no kinks or obstruction of flow along the length of the hose.
    5. Go to the connection between the outlet of the separator and the hose. Open the manual valve (V-RTP01-1211I, -1212K) between the separator and the cam lock fitting.
    6. Locate the manual valve located upstream of the liquid phase separator (V-RTP01-1211H,), which is physically found above the liquid phase separator on the line coming from the solids pump (PMP-RTP01-1201) and ensure that it is closed.
    7. Acquire the high-level switch indicator (LSH-RTP01-1251, -1252).
    8. Open the lid of the liquid phase separator from the ground level using the designated tool.
    9. Move the ladder located adjacent to the liquid phase separator to the intended location of the high-level switch indicator. Ensure the ladder is secure. Carefully ascend the ladder. Mount the level switch indicator. Carefully descend the ladder.
    10. Close the lid of the liquid phase separator from the ground level.
    11. *If the new liquid phase separator is to be the <u>primary</u> liquid phase separator:* Move the ladder directly beneath the manual upstream valve, if necessary. Ensure the ladder is secure. Carefully ascend the ladder. Open the manual upstream valve. Apply a non-hazardous waste label and fill in the accumulation “start” date. Carefully descend the ladder.

Standard Operating Procedure
PG&E Topock Remedy-produced Water Conditioning Plant Operation and Maintenance Plan

Title: Manual Cleaning of Frac Tanks

Number: RTP-SOP-07_Rev1

Created Date: 6/6/2014

1 Background and Scope

Pacific Gas and Electric Company (PG&E) is implementing a groundwater remedy near the intersection of Park Moabi Road and Interstate 40, approximately 12 miles southeast of Needles, California at the PG&E Topock Compressor Station (TCS). The Remedy-produced Water Conditioning Plant (RTP) will treat the water produced by the groundwater remedy prior to re-use or re-injection onsite.

The objective of this Standard Operating Procedure (SOP) is to describe the procedure for manual cleaning of the frac tanks (influent tanks and conditioned water storage tanks) at the RTP, using a pressure washer. The primary method for removing cleaning water and potential dislodged solids from the tanks is to pump water and solids from the tanks using a portable pump that discharges to the liquid phase separators (if cleaning influent tanks) or a potable tank trailer (if cleaning conditioned water storage tanks). The secondary method for removing cleaning water and solids from the tanks is using a vac truck that will dispose of the water and solids at a predetermined discharge location (e.g., the liquid phase separators, the evaporation ponds, an offsite facility, etc.).

NOTE: The operator should not break the plane of the tank openings with body parts at any time during this procedure, as it would be considered confined space entry. If confined space entry is necessary for a special procedure, the Health and Safety Plan should be referenced.

2 Drawing Numbers

- Remedy-produced Water Conditioning Plant Influent Tank Farm: I-11-01 through I-11-04
- Liquid Phase Seperator and Air Compressor: I-12-05
- Remedy-produced Water A-Side Conditioned Water Storage Tanks: I-14-01

3 Equipment/Supplies

- Appropriate personal protective equipment (PPE), including fall protection
- Health and Safety Plan
- Water supply tank
- Pressure washer and manufacturer’s operation manual
- Hand tools may be necessary

- For cleaning influent tanks (TNK-RTP01-1101, -1102, -1103, -1104): portable pump (a. primary method) OR vac truck (b. secondary method)
- For cleaning conditioned water storage tanks (TNK-RTP01-1401, -1402): portable pump, portable tank trailer (a. primary method) OR vac truck (b. secondary method)

4 Preconditions

- The influent tank(s) and/or conditioned water storage tank(s) designated for cleaning are empty.
- The influent tank(s) and/or conditioned water storage tank(s) designated for cleaning are not scheduled to be in operation while cleaning is to be performed.

5 Procedure

a. Cleaning using a portable pump (primary method)

1. Mobilize to the frac tank(s) to be cleaned in either the Influent Tank Farm or Conditioned Water Storage Tank Farm.
2. Plug in the Influent Tank Farm Sump Pump (PMP-RTP01-1105) or Conditioned Water Tank Farm Sump Pump (PMP-RTP01-1407). As necessary, open the sump pump valves (V-RTP01-1105A and -1105C, or V-RTP01-1407B and -1407D).
3. Set up and connect the pressure washer and water supply tank according to the procedures in the pressure washer manufacturer's operation manual.
4. Connect the outlet hose on the portable pump to either the liquid-phase separator temporary pump connection in the Influent Tank Farm area, if cleaning the influent tanks, OR the portable tank trailer inlet, if cleaning the conditioned water storage tanks.
5. IF cleaning the influent tanks, open the valve on the liquid-phase separator temporary pump connection.
6. Connect the portable pump inlet hose to the drain valve on the outside of the tank to be cleaned (V-RTP01-1101M, -1102M, -1103M, -1104M, -1401C, or -1402C).
7. Remove all wing nuts from the access manway on the side of the tank. The wing nuts should be removable by hand, but use hand tools if necessary.
8. Open the side access manway.
9. Do not break the plane of the tank wall with body parts at any time during this procedure, as it would be considered confined space entry. If confined space entry is necessary for a special procedure, the Health and Safety Plan should be referenced.
10. Use the pressure washer wand to spray the inside walls and floor of the frac tank from the access manway opening, removing solids that are caked onto the inside walls.
11. Close the side access manway.
12. Replace wing-nuts on the side access manway.
13. Carefully climb to the top of the staircase on the side of the tank with the pressure washer wand and fall protection gear.
14. NOTE: Fall protection must be used while on the lid of the tank. Set up and connect to fall protection.
15. Carefully ascend onto the roof of the tank with the pressure washer wand.

16. Remove all wing nuts from the access manway. The wing nuts should be removable by hand, but use hand tools if necessary.
17. Open the access manway.
18. Do not break the plane of the tank lid with body parts at any time during this procedure, as it would be considered confined space entry. If confined space entry is necessary for a special procedure, the Health and Safety Plan should be referenced.
19. Use the pressure washer wand to spray the inside walls and floor of the frac tank from the access manway opening, removing solids that are caked onto the inside walls.
20. Close the access manway.
21. Replace wing-nuts on the access manway.
22. Use the pressure washer to spray down the exterior roof of the frac tank, removing solids that are caked onto the roof. Avoid walking on wet areas, and use caution if walking on wet areas is necessary.
23. After cleaning the roof of the tank, carefully climb down to the top of the side staircase, disconnect fall protection, and descend the staircase.
24. IF cleaning one of the influent tanks:
    i. Turn on the solids pump (PMP-RTP01-1201) to remove the sludge from inside of the tank.
    ii. Allow the solids pump to run until it is no longer able to remove sludge.
    iii. If sludge remains inside the tank, proceed to Step a.25.
    iv. If the solids pump removed all sludge from the inside of the tank, skip Steps a.25-a.27 and proceed to Step a.28.
25. Open the drain valve on the outside of the tank to be cleaned (V-RTP01-1101M, -1102M, -1103M, -1104M, -1401C, or -1402C).
26. Turn on the portable pump and allow the remaining cleaning water and potential dislodged solids to be pumped from the inside of the tank to the liquid-phase separator OR portable tank trailer.
27. Turn off the portable pump.
28. Close the drain valve on the outside of the tank (V-RTP01-1101M, -1102M, -1103M, -1104M, -1401C, or -1402C).
29. Disconnect the portable pump from the drain valve.
30. If another tank in the Influent or Conditioned Water Storage Tank Farm needs to be cleaned, repeat Steps a.6 through a.29 for that tank. Repeat until the interior cleaning of all of the necessary frac tank(s) in the Influent Tank Farm or Conditioned Water Storage Tank Farm is complete.
31. IF cleaning the influent tanks, close the valve on the liquid-phase separator pump connection.
32. Disconnect the outlet hose on the portable pump from either the liquid-phase separator temporary pump connection in the Influent Tank Farm area, if cleaning the influent tanks, OR the portable tank trailer inlet if cleaning the conditioned water storage tanks.
33. Use the pressure washer to spray down the exterior side walls of the frac tank(s), removing solids that are caked onto the sides. Avoid walking on wet areas, and use caution if walking on wet areas is necessary.
34. Ensure that cleaning water drains to the sump and is pumped by the designated sump pump.
35. Unplug the sump pump.

b. Cleaning using a vac truck (secondary method)

1. Mobilize to the frac tank(s) to be cleaned in either the Influent Tank Farm or Conditioned Water Storage Tank Farm.
2. Plug in the Influent Tank Farm Sump Pump (PMP-RTP01-1105) or Conditioned Water Tank Farm Sump Pump (PMP-RTP01-1407).
3. Set up and connect the pressure washer and water supply tank according to the procedures in the pressure washer manufacturer's operation manual.
4. Connect the vac truck vacuum hose to the drain valve on the outside of the tank to be cleaned (V-RTP01-1101M, -1102M, -1103M, -1104M, -1401C, or -1402C).
5. Remove all wing nuts from the access manway on the side of the tank. The wing nuts should be removable by hand, but use hand tools if necessary.
6. Open the side access manway.
7. Do not break the plane of the tank wall with body parts at any time during this procedure, as it would be considered confined space entry. If confined space entry is necessary for a special procedure, the Health and Safety Plan should be referenced.
8. Use the pressure washer wand to spray the inside walls and floor of the frac tank from the access manway opening, removing solids that are caked onto the inside walls.
9. Close the side access manway.
10. Replace wing-nuts on the side access manway.
11. Carefully climb to the top of the staircase on the side of the tank with the pressure washer wand and fall protection gear.
12. NOTE: Fall protection must be used while on the lid of the tank. Set up and connect to fall protection.
13. Carefully ascend onto the roof of the tank with the pressure washer wand.
14. Remove all wing nuts from the access manway. The wing nuts should be removable by hand, but use hand tools if necessary.
15. Open the access manway.
16. Do not break the plane of the tank lid with body parts at any time during this procedure, as it would be considered confined space entry. If confined space entry is necessary for a special procedure, the Health and Safety Plan should be referenced.
17. Use the pressure washer wand to spray the inside walls and floor of the frac tank from the access manway opening, removing solids that are caked onto the inside walls.
18. Close the access manway.
19. Replace wing-nuts on the access manway.
20. Use the pressure washer to spray down the exterior roof of the frac tank, removing solids that are caked onto the roof. Avoid walking on wet areas, and use caution if walking on wet areas is necessary.
21. After cleaning the roof of the tank, carefully climb down to the top of the side staircase, disconnect fall protection, and descend the staircase.

22. Open the drain valve on the outside of the tank (V-RTP01-1101M, -1102M, -1103M, -1104M, -1401C, or -1402C).
23. Turn on the vac truck vacuum and allow the vac truck to remove all water and potential dislodged solids from the inside of tank.
24. Turn off the vac truck vacuum.
25. Close the drain valve on the outside of the tank (V-RTP01-1101M, -1102M, -1103M, -1104M, -1401C, or -1402C).
26. Disconnect the vac truck vacuum hose from the drain valve.
27. If another tank in the Influent or Conditioned Water Storage Tank Farm needs to be cleaned, repeat Steps b.4 through b.26 for that tank. Repeat until the interior cleaning of all of the necessary frac tank(s) in the Influent Tank Farm or Conditioned Water Storage Tank Farm is complete.
28. Use the pressure washer to spray down the exterior side walls of the frac tank(s), removing solids that are caked onto the sides. Avoid walking on wet areas, and use caution if walking on wet areas is necessary.
29. Ensure that cleaning water drains to the sump and is pumped by the designated sump pump.
30. Unplug the sump pump.

Standard Operating Procedure
PG&E Topock Remedy-Produced Water Conditioning Plant Operation and Maintenance Plan

Title: Off-site Trucking of Remedy-produced Water

Number: RTP-SOP-08_Rev1

Created Date: 2/13/14

1 Background and Scope

Pacific Gas and Electric Company (PG&E) is implementing a groundwater remedy near the intersection of Park Moabi Road and Interstate 40, approximately 12 miles southeast of Needles, California at the PG&E Topock Compressor Station (TCS). The Remedy-produced Water Conditioning Plant (RTP) will treat the water produced by the groundwater remedy prior to re-use or re-injection onsite.

The objective of this Standard Operating Procedure (SOP) is to describe the procedures for transferring conditioned water to the TCS truck fill station for off-site trucking

This procedure is controlled both manually and through the SCADA/HMI.

If question/concerns arise throughout the procedure, contact the Maintenance Supervisor to determine how to proceed.

2 Drawing Numbers

- Conditioned Water B-Side, Instrumentation: I-14-02

3 Equipment List

- Appropriate personal protective equipment (PPE)
- Health and Safety Plan
- OSHA suggested spotting signals for vehicles (attached)
- Safety cones
- 5-gallon bucket

4 Preconditions

- B-Side conditioned water storage tank (TNK-RTP01-1410) water level is above the low-level set point (LSL-RTP01-1452).

5 Procedure

1. Be aware that you are working around large equipment with limited visibility. You must make sure that the driver sees you and knows what you intend to do. DO NOT put yourself in a position where you can get crushed or pinched.

2. Prepare loading site:
    a. Adjust containment pad so that when trailer tandems are at the front lip of the pad the loading hose will lie within the rear area of the containment pad.
    b. Confirm that all the adapters are present and that the loading hose is properly stored and not in the path of the trucks as they enter the loading area.
    c. Confirm that the safety cones are in place at the north end of the containment pad (where the truck will be entering) and that you have a 5-gallon bucket to place under the trailer's drip tray valves.
3. Stage truck on the containment pad:
    a. When the driver arrives to the entrance of the loading area, the operator will discuss with the driver the preferred orientation of the truck on the loading pad: The truck will be stopped when the front trailer axle is at the south end of the containment pad (opposite of the entrance). This assures enough room in the containment pad behind the trailer to catch any minor spills. This also provides enough room for the hose to be in the containment pad in case it is dropped during connecting or disconnecting to the trailer. The operator will also discuss with the river that they will direct the driver onto the containment pad using hand signals. The operator will verify that the OSHA suggested spotting signals for vehicles (attached to this SOP) are okay to use, and add/modify hand signals as needed.
    b. As the truck moves to the loading area, the operator directs the truck driver for the placement of the truck on the containment pad using the agreed upon hand signals.
    c. Check that the driver has a valid license and appropriate credentials.
    d. Check that the driver has completed a pre-trip inspection on the truck and trailer.
    e. Check that the driver currently driving the truck is the same driver who performed the pre-trip inspection.

        Note: If there are any discrepancies in Steps 3.b, 3.c and 3.d please contact the Project Manger before proceeding.

    f. Allow the driver to hook up to the load-out hose.

        Note: The driver is responsible for:

        i. Attaching the load-out hose to the truck.
        ii. Making sure the truck tank is vented.
        iii. Determining how many gallons are to be loaded.
        iv. Disconnecting the load-out hose.
        v. Operating the load valve on the truck.

        The operator is responsible for:

        i. All valves upstream of the load-out hose.
        ii. Operating the load-out pump.
        iii. Telling the driver how many gallons have been loaded.
4. Select tank and activate pump:
    a. Confirm using the HMI that the conditioned storage water tank (TNK-RTP01-1410) is in appropriate condition to discharge.
    b. Write the beginning totalizer reading on the shipping documentation.

c. Confirm with the driver that the line isolation valves are properly positioned before opening tank valves.

d. Open the manual valve upstream of the TCS Truck Fill Pump (V-RTP01-1403A).

e. Open the manual valve downstream of the TCS Truck Fill Pump (V-RTP01-1403C).

f. Double check truck valves and vents and confirm with the driver that the truck is ready to receive water before opening the load-out supply hose valve (remember that water may gravity-flow out of the hose even if the pump is off).

g. Open the load-out supply hose valve.

h. Turn on the truck fill/transfer pump PMP-RTP01-1403 by turning the hand switch HS-RTP01-1403 to ON.

i. The truck fill/transfer pump will draw from the conditioned water storage tank (TNK-RTP01-1410).

j. During the pumping operation the operator must stay in the load control area and the driver must stay by the trailer valve.

k. There are numerous ways the drivers use to load their trucks to the legal limits. This means that the operator and the driver need to work together to assure that the truck goes out properly loaded.

l. When the truck is loaded, first turn off the transfer pump PMP-RTP01-1403 by turning the hand switch HS-RTP01-1403 to OFF. Then close the load supply valve.

m. The driver will close the trailer valve.

5. Disconnect the hose from trailer valve:

   a. Confirm that the 5-gallon bucket is under drip tray valve and drip tray valve is open.

   b. The operator will disconnect the load-out hose.

   c. Hang the hose on the storage hook, remove any adapters used and replace trailer valve cap or plug.

   d. Close drip tray valve and remove 5-gallon bucket from under drip tray.

6. Fill out shipping documentation and record the load:

   a. Write the ending totalizer reading on the shipping documentation.

   b. Confirm that you and the driver have filled out and signed the manifest and that the manifest has been properly filled in and the manifest number recorded.

   c. Confirm that you and the driver have signed the shipping documentation and give the driver their copies.

7. Shutdown after loading is completed:

   a. Verify with the driver that the truck is in a safe condition and that it is not overly full.

   b. Instruct the driver to exit the decontamination pad in the eastbound direction. Assist the truck driver with exiting the decontamination pad.

   c. Adjust placement of containment pad in the loading area if it has slipped during the loading operation.

   d. Empty the 5-gallon buckets into the decontamination pad secondary containment trench.

   e. Take all paperwork to office and file in the appropriate place.

Standard Operating Procedure
PG&E Topock Remedy-produced Water Conditioning Plant Operation and Maintenance Plan

Title: Inspection of B-Side Conditioned Water Storage Tank

Number: RTP-SOP-09_Rev1

Revision Date: 5/19/2015

1 Background and Scope

Pacific Gas and Electric Company (PG&E) is implementing a groundwater remedy near the intersection of Park Moabi Road and Interstate 40, approximately 12 miles southeast of Needles, California at the PG&E Topock Compressor Station (TCS).

The objective of this Standard Operating Procedure (SOP) is to describe the procedure for inspection of the Freshwater B-Side Conditioned Water Storage Tank.

The operator should not break the plane of the tank openings with body parts at any time during this procedure, as it would be considered confined space entry. If confined space entry is necessary for a special procedure, the Health and Safety Plan should be referenced.

2 Drawing Numbers

- Freshwater B-Side Conditioned Water Storage Tank (TNK-RTP01-1410): I-14-02
- Conditioned Water Storage Tank Mechanical Plans and Details: S-14-01 through S-14-05

3 Equipment/Supplies

- Appropriate personal protective equipment (PPE), including fall protection
- Health and Safety Plan
- Lockout/tagout tags and lockout/tagout manual for B-Side Conditioned Water Storage Tank maintenance (if tank shutdown is performed)
- Portable pump and water hauling truck OR vac truck (if tank draining is conducted)

4 Procedure

1. Inspect tank and associated equipment with reference to the following instructions (Steps 2 through 11). If unsuitable tank conditions are observed at any time throughout the procedure:

   1.1. Shut down and/or drain the tank if it is warranted (e.g. the tank is in danger of a blow out or failure).

      1.1.1. Shutdown Tank

         i. Lockout/tagout the tank by following instructions in the lockout/tagout manual for B-Side Conditioned Water Storage Tank maintenance.
         ii. Use the HMI to turn OFF the B-Side Filter Feed Pumps (PMP-RTP01-1230 and -1240).

iii. Close the manual valve upstream (V-RTP01-1410A) and downstream (V-RTP01-1410B) of the Conditioned Water Storage Tank.

1.1.2. Drain Tank

i. Use the HMI to verify that there is sufficient volume in the influent tanks for the discharge from the B-Side Conditioned Water Storage Tank.
   a. Proceed to next steps only if there is sufficient volume in the influent tanks.
ii. If the tank is not already shutdown, shutdown the tank by completing all steps listed for shutting down the tank (see Step a. above).
iii. Slowly open the manual drain valve on the tank (V-RTP01-1410G).
iv. Ensure that the tank discharge properly drains into the influent tanks.
   a. If there is any malfunctioning of the tank discharge draining to the influent tanks, immediately close the manual drain valve that was opened in step iii.
v. If the tank does not drain completely by gravity, pump out the remaining water using a portable pump and water hauling truck OR vac truck.
   a. Close V-RTP01-1410G.
   b. Connect the portable pump or vac truck to the connection downstream of V-RTP01-1403D.
   c. If using a portable pump, ensure the water flows to the water hauling truck.
   d. Initiate pumping using the portable pump or vac truck.
   e. After TNK-RTP01-1410 is completely drained, terminate pumping from the portable pump or vac truck.
   f. Close V-RTP01-1403D.
   g. Disconnect the portable pump or vac truck.
   h. The discharge in the water hauling truck or vac truck may be drained in the influent tanks or liquid phase separator.
vi. After the tank has completely drained, verify V-RTP01-1410G is closed.

1.2. Attempt to fix the tank conditions, if feasible.

1.3. If the tank conditions cannot be fixed, the operator should contact the Maintenance Supervisor so parts can be procured and work can be scheduled.

2. Inspect the outside of the tank (including tank walls, anchors, supports, stairs and platforms) for the following:

- No signs of distortion, buckling, denting, or bulging on tank
- No signs of cracks, leakage, or corrosion on tank
- No severe corrosion or damage on staircase
- Grating at flush cleanout catch basin is intact
- Flush cleanout catch basin is free of standing water

3. Inspect the nozzles, piping and actuated and manual valves for the following:

- No signs of leakage or damage along piping
- No evidence of vibration along piping
- Piping is adequately supported
- No signs of leakage or damage at valves
- Nozzles are adequately sealed and there are no signs of leakage or damage
- Flanged connection bolts are tight and fully engaged with no sign of wear or corrosion
- Bird screen on overflow line is intact

4. Carefully climb the staircase to the top of the tank to inspect the lid of the tank.

5. Fall protection must also be used when inspecting the lid of the tanks. Set up and connect to fall protection and ascend onto the roof of the tank.
6. Do not break the plane of the tank lid with body parts at any time during this procedure, as it would be considered confined space entry. If confined space entry is necessary for a special procedure, the Health and Safety Plan should be referenced
7. Inspect the roof for the following:
    - No signs of distortion, buckling, denting, or bulging on roof
    - No signs of cracks, leakage, or corrosion on roof
8. Descend from the roof of the tank
9. When it is safe to do so, disconnect from fall protection.
10. Carefully descend the staircase.
11. Contact the Maintenance Supervisor if there are any notes that indicate further maintenance is required so parts can be procured and work can be scheduled.

Standard Operating Procedure
PG&E Topock Remedy-produced Water Conditioning Plant Operation and Maintenance Plan

Title: Disposal of Produced Water in Evaporation Ponds via the TCS Wastewater Tank Discharge Connection

Number: RTP-SOP-10_Rev1

Created Date: 2/24/14

1 Background and Scope

Pacific Gas and Electric Company (PG&E) is implementing a groundwater remedy near the intersection of Park Moabi Road and Interstate 40, approximately 12 miles southeast of Needles, California at the PG&E Topock Compressor Station (TCS). The Remedy-produced Water Conditioning Plant (RTP) will treat the water produced by the groundwater remedy prior to re-use or re-injection onsite.

The objective of this Standard Operating Procedure (SOP) is to describe the procedures for transferring water from the following locations to the evaporation ponds:

a. Unconditioned water from the Remedy A-Side
b. Conditioned water from the Remedy A-Side
c. Liquids/solids from Influent Tank Farm secondary containment
d. Liquids/solids from A-Side Conditioned Water Storage Tank Farm secondary containment

This procedure will require coordination with TCS Operations. Permission to transfer a specific quantity of water must be approved by TCS and steps must be taken to assure that only the specific quantity of water is transferred.

Water is transferred to the evaporation ponds via a connection to the TCS wastewater tank discharge. This procedure is controlled manually and through the SCADA/HMI.

2 Drawing Numbers

- Influent Tanks 1 through 4, Instrumentation: I-11-01 through I-11-04
- Filter System A-Side, Instrumentation: I-12-01
- Conditioned Water Storage Tanks, Instrumentation: I-14-01 and I-14-02

3 Equipment List

- Appropriate personal protective equipment (PPE)
- May also require handheld pH and conductivity meters

4 Preconditions

a. Unconditioned water from the Remedy A-side:

- PG&E has instructed for unconditioned water to be sent from the Remedy A-side to the evaporation ponds via the TCS wastewater tank discharge connection.
- Designated influent tank(s) (TNK-RTP01-1101, -1102, -1103, -1104) water level is full and/or backwash pumps have completed their designated cycles.

b. Conditioned water from the Remedy A-side Conditioned Water Tank Farm:

- PG&E has instructed for water to be sent from the Remedy A-side conditioned water storage tanks (TNK-RTP01-1401 and -1402) to evaporation ponds via the TCS wastewater tank discharge connection.
- Designated Remedy A-side conditioned water storage tank(s) water level(s) are above the low-level set point (LSL-RTP01-1451 and -1453).

c. Liquids/solids from Influent Tank Farm secondary containment:

- PG&E has instructed for water to be sent from the Influent Tank Farm secondary containment to evaporation ponds via the TCS wastewater tank discharge connection.
- There are liquids/solids in the Influent Tank Farm sump.
- The manual valves are configured to pump liquids/solids to the influent tanks.

d. Liquids/solids from A-side Conditioned Water Storage Tank Farm secondary containment:

- PG&E has instructed for water to be sent from Conditioned Water Storage Tank Farm A-side secondary containment to evaporation ponds via the TCS wastewater tank discharge connection.
- There are liquids/solids in the Conditioned Water Storage Tank Farm sump.
- The manual valves are configured to pump liquids/solids to the Influent Tank Farm sump.

5 Procedure

a. Transferring unconditioned water from the Remedy A-side to evaporation ponds via the TCS wastewater tank discharge connection:

1. Notify and coordinate with TCS Operations before water is transferred. Confirm the allowable flow rate and allowable volume of liquid that may be transferred to the TCS evaporation ponds.
2. Use the HMI to turn off the primary filter feed pump on the filter system A-side (PMP-RTP01-1210 or PMP-RTP01-1220).
3. Close the valves upstream of the primary coarse cartridge filter (FV-RTP01-1211A or -1221A).
4. Open the normally closed (NC) manual valve downstream of the primary filter feed pump that routes liquids/solids to the TCS waste water tank (V-RTP01-1210E or -1220E).
5. Use the HMI to program the primary filter feed pump (PMP-RTP01-1210 or -1220) to transfer only the volume of water determined in Step 1 to the TCS evaporation ponds.
6. Use the HMI to turn on the primary filter feed pump (PMP-RTP01-1210 or -1220). Use the speed command to adjust the flow rate to the allowable flow rate determined in Step a.1.
7. The filter feed pump will move water to the TCS evaporation ponds when the second Precondition is met.

8. The filter feed pump will turn off when the volume of water to be transferred that was programmed in Step a.6 is reached.
9. Close the NC manual valve downstream of the primary filter feed pump that routes liquids/solids to the TCS evaporation ponds (V-RTP01-1210E or -1220E).
10. Open the valves upstream of the primary coarse cartridge filter (FV-RTP01-1211A or -1221A).
11. Use the speed command on the HMI to adjust the flow rate of the primary filter feed pump back to its initial flow rate (prior to Step a.4).
12. Use the HMI to return the primary filter feed pump on the filter system A-side (PMP-RTP01-1210 or -1220) to the regular operations mode, unless otherwise instructed.

b. Transferring conditioned water from the Remedy A-side Conditioned Water Tank Farm to evaporation ponds via the TCS wastewater tank discharge connection:

1. Notify and coordinate with TCS Operations before water is transferred. Confirm the allowable flow rate and allowable volume of liquid that may be transferred to the TCS evaporation ponds.
2. Use the HMI to turn off the conditioned water transfer pump (PMP-RTP01-1405 or -1406).
3. Use the HMI to close FV-RTP01-1416.
4. Use the HMI to open FV-RTP01-1415, which allows water to be transferred to the TCS wastewater tank discharge connection.
5. Use the HMI to program the conditioned water transfer pump (PMP-RTP01-1405 or PMP-RTP01-1406) to transfer only the volume of water determined in Step b.1 to the TCS evaporation ponds.
6. The conditioned water transfer pump (PMP-RTP01-1405 or -1406) will move water to the TCS evaporation ponds when the Preconditions are met. The volume of water transferred can be monitored using the flow meter FM-RTP01-1471.
7. The conditioned water transfer pump will turn off when the volume of water to be transferred that was programmed in Step b.5 is reached.
8. Use the HMI to close FV-RTP01-1415.
9. Use the HMI to open FV-RTP01-1416 so that water will be transferred to the T-IRZ00-0620 conditioned water frac tank, unless otherwise instructed.
10. Use the HMI to return the conditioned water transfer pumps on the filter system A-side (PMP-RTP01-1405 or -1406) to the regular operations schedule, unless otherwise instructed.

c. Transferring liquids/solids from the Influent Tank Farm secondary containment to evaporation ponds via the TCS wastewater tank discharge connection:

1. Notify and coordinate with TCS Operations before water is transferred. Confirm the allowable flow rate and allowable volume of liquid that may be transferred to the TCS evaporation ponds.
2. Open manual valve V-RTP01-1105C and then close manual valve V-RTP01-1105A.
3. Plug in sump pump PMP-RTP01-1105. Keep track of the volume of liquids/solids transferred to the TCS evaporation ponds using the flow meter FM-RTP01-1171.
4. When the maximum allowable volume determined in Step c.1 has been reached **or** all liquids/solids in the sump have been pumped before the maximum allowable volume has been reached, unplug the sump pump.
5. Open manual valve V-RTP01-1105A and then close manual valve V-RTP01-1105C.

d. Transferring conditioned water from the Conditioned Water Storage Tank Farm A-side secondary containment to evaporation ponds via the TCS wastewater tank discharge connection:

1. Notify and coordinate with TCS Operations before water is transferred. Confirm the allowable flow rate and allowable volume of liquid that may be transferred to the TCS evaporation ponds.
2. Open manual valve V-RTP01-1407D and then close manual valve V-RTP01-1407B.
3. Plug in PMP-RTP01-1407 at the outlet. Keep track of the volume of liquids/solids transferred to the TCS evaporation ponds using the flow meter FM-RTP01-1472.
4. When the maximum allowable volume determined in Step e.1 has been reached **or** all liquids/solids in the sump have been pumped before the maximum allowable volume has been reached, unplug the sump pump.
5. Open manual valve V-RTP01-1407B and then close manual valve V-RTP01-1407D.

Standard Operating Procedure
PG&E Topock Remedy-produced Water Conditioning Plant Operation and Maintenance Plan

Title: Water Transfer from Conditioned Water Tank Farm to Tank at MW-20 Bench

Number: RTP-SOP-11_Rev1

Created Date: 11/25/13

1 Background and Scope

Pacific Gas and Electric Company (PG&E) is implementing a groundwater remedy near the intersection of Park Moabi Road and Interstate 40, approximately 12 miles southeast of Needles, California at the PG&E Topock Compressor Station (TCS). The Remedy-produced Water Conditioning Plant (RTP) will treat the water produced by the groundwater remedy prior to re-use or re-injection onsite.

The objective of this Standard Operating Procedure (SOP) is to describe the procedure for transferring water to the conditioned water frac tank T-IRZ00-0620, located at the MW-20 Bench, from the (a.) Remedy A-side conditioned water tank farm and (b.) Freshwater B-side conditioned water storage tank.

This automated procedure is largely controlled through the SCADA/HMI.

2 Drawing Numbers

- IRZ Carbon Amendment Building (conditioned water frac tank, T-IRZ00-0620), Instrumentation: I-06-04
- Conditioned Water Storage Tank Farm A-side, Instrumentation: I-14-01
- Conditioned Water B-side, Instrumentation: I-14-02

3 Equipment List

- Not applicable

4 Preconditions

a. For transferring water from Remedy A-side conditioned water tank farm to the conditioned water frac tank, T-IRZ00-0620:
    - Conditioned water frac tank, T-IRZ00-0620, located at the MW-20 Bench water level is below the high-level set point (LE/LT-IRZ00-0656)
    - Designated Remedy A-side conditioned water storage tank(s) (TNK-RTP01-1401, -1402) water level(s) above the low-level set point (LSL-RTP01-1451, -1453)

b. For transferring water from the Freshwater B-side conditioned water storage tank to the conditioned water frac tank, T-IRZ00-0620:
    - Conditioned water frac tank, T-IRZ00-0620, located at the MW-20 Bench water level is below the high-level set point (LE/LT-IRZ00-0656)

- Freshwater B-side conditioned water storage tank (TNK-RTP01-1410) water level is above the low-level set point (LSL-RTP01-1452)

5 Procedure

a. Transfer water from Remedy A-side conditioned water tank farm to the conditioned water frac tank, T-IRZ00-0620:

   1. The SCADA will control the tanks and equipment configuration per the backwashing schedule. The procedure begins once the Preconditions are met.
   2. The conditioned water transfer pump (PMP-RTP01-1405, -1406) will move the water through actuated valve FV-RTP01-1416 and across the Topock Compressor Station to the pipelines leading to the conditioned water frac tank at the MW-20 Bench (T-IRZ00-0620).

b. Transfer water from B-side conditioned water storage tank to the conditioned water frac tank, T-IRZ00-0620:

   1. The SCADA will control the tanks and equipment configuration per the backwashing schedule. The procedure begins once the Preconditions are met.
   2. Water will flow through motorized valve FV-RTP01-1414 to the conditioned water frac tank at the MW-20 Bench (T-IRZ00-0620).

Standard Operating Procedure
PG&E Topock Power Supply, Distribution and Communication Operation and Maintenance Plan

Title: Transformer Inspection

Number: PWR-SOP-01_Rev0

Creation Date: 6/6/2014

1 Background and Scope

Pacific Gas and Electric Company (PG&E) is implementing a groundwater remedy near the intersection of Park Moabi Road and Interstate 40, approximately 12 miles southeast of Needles, California at the PG&E Topock Compressor Station (TCS).

The objective of this Standard Operating Procedure (SOP) is to describe the procedures for inspection of three-phase pad-mounted compartmental type distribution transformers and transformer pads. Transformer inspection should be conducted on an annual or more frequent interval.

CAUTION: Do NOT open the cabinet of the transformer. The transformer contains hazardous voltage. Topock personnel are typically not trained to perform interior transformer maintenance. If interior transformer inspection or maintenance is necessary, the Maintenance Supervisor should arrange for an electrician to conduct the maintenance.

If unsuitable conditions are encountered that cannot be fixed using this procedure, the operator should take photographs to document the unsuitable conditions and contact the Maintenance Supervisor to determine how to proceed.

2 Equipment and Supplies List

- Health and Safety Plan
- Appropriate personal protective equipment (PPE)
- Manufacturer's installation and operation manual
- Vehicle
- Camera (to document any unsuitable conditions that are observed)
- Broom
- Shop-vac
- Can of touch-up paint and paintbrush
- Dry, clean towel
- Spray bottle filled with water

3 Procedures

1. Inspect the concrete pad of the transformer for the following:
    a. No liquid accumulation on or surrounding the concrete pad.
        i. If liquid accumulation is present, inspect the liquid accumulation to see if it has a sheen and/or petroleum odor.
        ii. If the liquid accumulation has no sheen and/or petroleum odor, remove using a shop-vac.
        iii. If the liquid accumulation has a sheen and/or petroleum odor, verify that the transformer oil is a non-hazardous waste by referring to its SDS (in the Health and Safety Plan)
            1. If the leaked transformer oil is a non-hazardous waste, remove using a shop-vac.
            2. If the leaked transformer oil is a hazardous waste, remove using absorbent.
    b. No excessive soil or dust on the concrete pad.
        i. If excessive soil or dust is present, sweep off of the concrete pad using a broom.
    c. No signs of concrete corrosion.
    d. No signs of concrete breakage or cracks.
    e. No signs of foundation settlement.
2. Inspect all exposed surfaces of the transformer exterior cabinet for the following:

    CAUTION: If severe damage on the exterior of the transformer is present, do NOT attempt to fix the transformer. Contact the Maintenance Supervisor so an appropriately trained electrical technician can perform maintenance activities.

    WARNING: The transformer cabinet may be very hot from sitting in the sun. Appropriate PPE such as leather gloves should be worn when touching the transformer exterior cabinet.

    a. Cabinet handle is locked and intact.
    b. Specification plate is present and legible on the transformer.
    c. The surface of the transformer cabinet (at a shaded portion, if possible) is not excessively hot to the touch.
    d. All bolts and hinges are intact.
    e. No evidence of tampering.
    f. No evidence of battered metal or gouges.
    g. No dents or deformities.
    h. No noticeable vibration originating from the transformer.
    i. No unusual sound originating from the transformer.
    j. No graffiti.
        i. If graffiti is present, paint over the graffiti using the touch-up paint and paintbrush.
    k. No weathered or scratched paint.
        i. If paint is weathered or scratched, paint over weathered or scratched section using the touch-up paint and paintbrush.
    l. No excessive soil or dust on the top/sides of the transformer.

   i. If excessive soil or dust on the top/sides of the transformer is present, wipe down using the dry, clean towel. Use spray bottle with water to clean if necessary.

m. No pooled water on the roof of the transformer.

   i. If pooled water is present on the roof of the transformer, remove using the shop-vac.

3. If any issues were observed in Steps 1 or 2 that were not able to be resolved on the spot such that further maintenance work is needed, take photographs to document the unsuitable conditions and contact the Maintenance Supervisor so any needed parts can be procured and work can be scheduled.

Standard Operating Procedure
PG&E Topock Power Supply, Distribution and Communication
Operation and Maintenance Plan

Title: Solar Photovoltaic System Maintenance

Number: PWR-SOP-02_Rev0

Creation Date: 6/3/2014

1 Background and Scope

Pacific Gas and Electric Company (PG&E) is implementing a groundwater remedy near the intersection of Park Moabi Road and Interstate 40, approximately 12 miles southeast of Needles, California at the PG&E Topock Compressor Station (TCS).

The objective of this Standard Operating Procedure (SOP) is to describe the procedures for operating and maintaining the solar photovoltaic (PV) systems. The solar PV systems are a source of secondary power supply and are located at select remote well locations, and possibly at the Operations Building at the Transwestern Bench and the Remedy-produced Water Conditioning Building inside TCS.

These operation and maintenance (O&M) procedures are to be performed at the following frequencies, or as recommended by the manufacturer:

Maintenance Task	Weekly	Monthly	Every 3 Months
a. Battery visual inspection	X		
b. Battery cleaning		X	
c. Battery voltage check		X	
d. Solar panel cleaning			X
e. Solar panel visual inspection			X
f. Inverter/battery charger and charge controller inspection	X		
g. Wiring and connections inspection	X		

The manufacturer's installation and operation manual should be referenced while performing O&M procedures. The procedures in this SOP are for sealed gel or Absorbent Glass Mat (AGM) batteries.

If unsuitable conditions of the solar PV systems are observed at any time throughout the procedure, the operator should attempt to fix them, if feasible. If the conditions cannot be fixed, the operator should take photographs to document the unsuitable conditions and contact the Maintenance Supervisor after performing the inspection to determine how to proceed.

2 Equipment and Supplies List

- Health and Safety Plan
- Appropriate personal protective equipment (PPE)
- Manufacturer's installation and operation manual
- Vehicle
- Camera (to document any unsuitable conditions that are observed)
- Spare battery to replace damaged or malfunctioning battery if needed
- For (b.) Battery cleaning:
  - Dry cloth
  - Damp cloth
  - Spray bottle filled with deionized (DI) water
  - Spray bottle filled with DI water mixed with baking soda
  - Metal brush (Do not use metal files)
  - Petroleum jelly or grease, if necessary (to prevent battery corrosion)
- For (c.) Battery voltage check:
  - Volt meter
- For (d.) Solar panel cleaning:
  - Spray bottle filled with DI water
  - Non-abrasive sponge
  - Dry cloth
- For (g.) Wiring and connection inspection:
  - Non-abrasive dry cloth
  - Spare fuses
  - Spare circuit breakers
  - Spare connector screws

3 Procedures

a. Battery inspection:

CAUTION: Electrical hazard present when handling the batteries. Perform the following steps with care.

i. Visually inspect the batteries for the following conditions:

1. Batteries are charging.
   - If batteries are not charging, troubleshoot with reference to the procedures below for (c.) Battery voltage check, (f.) Inverter/battery charger and charge controller inspection, and (g.) Wiring and connections inspection.
2. Batteries are dry.
   - If batteries are wet, carefully wipe down the outside of the battery with a dry towel.
3. Batteries are free of cracks.
   - If a battery is cracked: Use CAUTION while inspecting and handling the battery. Reference the manufacturer's installation and operation manual and follow the steps to remove the battery from the solar PV system and replace it with the spare battery. Dispose of the cracked battery in accordance with the Hazardous Materials Business Plan.

4. Batteries are free of corrosion (typically white coating) at the terminals or connectors.
    - If corrosion is observed, refer to (b.) Battery cleaning step vii below.

b. Battery cleaning:

CAUTION: Electrical hazard is present when handling the battery. Perform the following steps with care.

i. Switch off/disconnect all loads (devices powered by the battery system).

ii. Turn off or disconnect the solar charge.

iii. Turn off the circuit breaker to and from the battery bank.

iv. Ensure that the caps on the batteries are sealed tight to keep any dirt from entering the battery.

v. Wipe the top and outside of the battery with a damp cloth.

vi. If corrosion is present at the terminals:

1. Apply water and baking soda solution to the affected area and wipe with a damp cloth.
2. Stubborn areas should be scrubbed with a metal brush (NOT metal file).
3. After cleaning, rinse the terminals with water.
4. Apply petroleum jelly or grease to the connected terminal to prevent future corrosion.

vii. Use a dry cloth to dry any wetted areas on the battery to ensure that it is safe to connect to loads and solar charge.

viii. CAREFULLY reconnect the loads to the system.

ix. Verify that positive and negative battery terminals are wired properly (see manufacturer's instruction manual).

x. Turn on or reconnect the solar charge.

xi. Turn on the circuit breaker to and from the battery bank.

xii. Check that the battery is properly connected and functioning.

xiii. Move to the next cell, if applicable, and repeat the procedure.

c. Battery voltage check:

i. CAUTION: Electrical hazard is present when working with battery volt meter. Perform the following steps with care.

ii. Connect the volt meter's positive lead to the battery's positive terminal and the negative lead to the negative terminal of the battery.

iii. If the battery voltage is not between 11 and 13 volts, the battery will need to be replaced. Reference the manufacturer's installation and operation manual and follow the steps to remove the battery from the solar PV system and replace it with the spare battery. Dispose of the cracked battery in accordance with the Hazardous Materials Business Plan.

d. Solar panel cleaning:

i. To remove a layer of dust and dirt from the modules, simply wash the panel with DI water.

ii. If the module has a thicker layer of dirt/grime/bird droppings etc. that is harder to remove, wash with cold water and rub the panel surface with a non-abrasive sponge.

iii. Do not use a metal brush or detergents to clean solar panel surface.

e. Solar panel visual inspection:

i. It is optimal to perform visual inspections of the solar panels after they have been cleaned.

ii. Visually inspect that the panel is standing upright (not fallen over) and the surface is generally facing south.

iii. Visually inspect the glass surface of the panel for the following:

1. Glass surface is clean.
    - If surface of glass is dirty, clean with reference to the procedure above for (d.) Solar panel cleaning.
2. Glass surface is intact (parts have not been lost/stolen).
3. Glass surface is free of cracks and chips.
4. Glass surface is free of de-lamination.
5. Glass surface is free of fogged glazing.
6. Glass surface is free of water leaks.
7. Glass surface is free of discoloration.

iv. Visually inspect the array mounting frame for the following:

1. Frame bolts are free of rust.
2. Frame bolts are free of damage.
3. Array mounting frame and glass solar panels are firmly secured.

v. Visually inspect that the wires in the junction boxes for the following:

1. Wires are not chewed by rodents or insects.
2. No excessive moisture is present.

vi. If unsuitable conditions exist that cannot be immediately resolved, contact the Maintenance Supervisor to procure replacement equipment and schedule the replacement work.

f. Inverter/battery charger and charge controller inspection:

CAUTION: Electrical hazard is present when working with inverter/battery charger and charge controller. Perform the following steps with care.

i. Use a dry cloth to wipe away any accumulated dirt/dust.

ii. Visually inspect the inverter/battery charger and charge controller for the following:

iii. All the indicators such as LED lights are working.

iv. Wires leading to and from this device are not loose.

v. Check that the charge controller indicates that the system is charging when the sun is up.

g. Wiring and connections inspection:

CAUTION: Electrical hazard is present when working with wiring and connections. Perform the following steps with care.

i. The following sections of conduit and wiring and their connections should be inspected for any signs of damage:

- Solar panels to the charge controller
- Charge controller to the battery bank
- Inverter/charger to the battery bank
- Inverter/charger to the loads (devices powered by the system)
- Battery bank to the loads

ii. Use a dry cloth to wipe away any accumulated dirt/dust on wiring and connections.

iii. Inspect wiring installations for any cracks, breaks or deterioration in the insulation/conduits.

iv. Inspect panel boxes for the following:

    1. Rodents/insects and/or their nests.
    2. No excessive moisture is present.

v. Inspect connections for any corrosion and/or burning.

vi. Check that switches do not spark when turned on or off.

vii. If unsuitable conditions exist that cannot be immediately resolved, contact the Maintenance Supervisor to procure replacement equipment and schedule the replacement work.

Standard Operating Procedure
PG&E Topock Power Supply, Distribution and Communication Operation and Maintenance Plan

Title: Communication Panel Inspection and Maintenance

Number: PWR-SOP-03_Rev0

Creation Date: 7/10/2014

1 Background and Scope

Pacific Gas and Electric Company (PG&E) is implementing a groundwater remedy near the intersection of Park Moabi Road and Interstate 40, approximately 12 miles southeast of Needles, California at the PG&E Topock Compressor Station (TCS).

The objective of this Standard Operating Procedure (SOP) is to describe the procedures for inspecting and maintaining the communication panels. The communication panels are located at select node locations, and at the TCS. Each communications panel is a connection and redistribution point for network equipment including process logic controllers (PLCs), human-machine interfaces (HMIs), remote input/output (I/O) panels, and personal computers.

All procedures are to be performed by appropriately trained electrical technicians. Only arc-flash qualified technicians are authorized to open electrical enclosures and perform work within them.

The manufacturer's installation and operation manual should be referenced while performing O&M procedures.

If unsuitable conditions of the communication panels are observed at any time throughout the procedure, the operator should attempt to fix them, if feasible. If the conditions cannot be fixed, the operator should contact the Maintenance Supervisor after performing the inspection to determine how to proceed.

2 Drawing Numbers

- Not applicable

3 Equipment and Supplies List

- Health and Safety Plan
- Appropriate personal protective equipment (PPE), including appropriately caloric-rated Nomex clothing, gloves, and face protection
- Communication Panel manufacturer's installation and operation manual
- Vehicle for mobilization to site
- For (b.) UPS power check and (c.) Power supply voltage check:
  - Multimeter
  - Multimeter manufacturer's instruction manual

  - Replacement batteries (for UPS power check)
  - UPS manufacturer's instruction manual

- For (d.) Ethernet switch wiring and connections inspection:
  - Replacement Ethernet cable
- For (e.) Wiring and connection inspection:
  - Screwdrivers and wire cutter
- For (f.) Panel cleaning and (i.) ventilation/cooling inspection:
  - Dry cloth
  - Hand vacuum
  - Alcohol-based cleaning product (for panel cleaning)
- For (h.) Radio inspection:
  - Radio manufacturer's instruction manual
  - Power over Ethernet (POE) unit manufacturer's instruction manual
- For (i.) Ventilation/cooling inspection:
  - Replacement ventilation filters

4 Procedures

a. Panel visual inspection:

CAUTION: Electrical hazard is present when working inside the communication panel. Perform the following steps with care.

i. Inspect the wire connections for the following conditions:
   - Loose wires.
   - Burnt wires.
   - Flashing red lights or no power lights on.

ii. Inspect for broken or damaged equipment.

iii. Inspect alignment of panel and door.

iv. Inspect panel anchorage.

v. Inspect ground connection.

vi. Inspect all painted surfaces for corrosion, chips or gouges, and heat damage.

vii. Inspect all labels to make sure they are intact.

viii. Inspect all duct seals.

ix. Inspect caulking around base of panel.

x. Inspect concrete equipment pad for damage and standing water.

b. UPS power check:

CAUTION: Electrical hazard is present when working on the UPS. Perform the following steps with care.

i. Reference the UPS manufacturer's instruction manual for direction on how to check relay and see if relay is energized.

   1. If energized then UPS is supplying power.

ii. Unplug UPS from power outlet.

1. Confirm relay is de-energized.

iii. Reference the UPS manufacturer's instruction manual and multimeter manufacturer's instruction manual for direction on how to check the voltage of the UPS battery using the multimeter.

1. If the voltage of a battery is not between the target range specified by the manufacturer, it must be replaced. Reference the manufacturer's installation and operation manual and follow the steps to remove the battery from the UPS system and replace it with a replacement battery. Dispose of the defective or dead battery in accordance with the Hazardous Materials Business Plan.

iv. Plug UPS back into its power outlet.

v. Reference the UPS manufacturer's instruction manual for instruction on how to perform a load test on the UPS and see if the UPS can still handle the load requirements of the communications panel.

c. Power supply voltage check:

CAUTION: Electrical hazard is present when working with the power supply. Perform the following steps with care.

CAUTION: Working in AC voltage setting can be dangerous, and using a multi-meter in the AC voltage setting is not recommended.

i. Check power supply voltage. Use multi-meter and make sure voltage is within ±1 volt of 24 volts DC.

1. Plug the multimeter black probe into the "COM" port.
2. Plug the multimeter red probe into the "mAVΩ" port.
3. Set the multimeter to "200V" in the DC (direct current) range.
4. Connect the multimeter to the power supply as specified in the power supply manufacturer's instruction manual.
5. Check to see if the voltage is within 23 to 25 volts.
6. If voltage is not within 23 to 25 volts, troubleshoot the power supply as instructed in the manufacturer's instruction manual.
7. If further maintenance or replacement is required, contact the Maintenance Supervisor.

d. Ethernet switch wiring and connections inspection:

i. Inspect the Ethernet switch unit for power.

ii. Inspect the Ethernet cables for damage.

iii. Check that all cables are plugged in securely.

iv. Reconnect or replace cables as needed.

e. Wiring and connections inspection:

CAUTION: Electrical hazard is present when working with wiring and connections. Perform the following steps with care.

i. Use a dry cloth to wipe away any accumulated dirt/dust on wiring and connections.

ii. Inspect wiring installations for any cracks, breaks or deterioration in the insulation/conduits.

iii. Inspect panel boxes for the following:
- Rodents/insects and/or their nests.
- No excessive moisture is present.

iv. Inspect connections for any corrosion and/or burning.

v. Check that switches do not spark when turned on or off.

vi. If unsuitable conditions exist that cannot be immediately resolved, contact the Maintenance Supervisor to procure replacement equipment and schedule the replacement work.

f. Panel cleaning:

CAUTION: Electrical hazard is present when working inside the communication panel. Perform the following steps with care.

i. Remove insects or rodents and their nests.

ii. Vacuum out all debris, dirt, and/or sand.

iii. Use cloth with alcohol-based cleaning product to wipe down panel.

g. Fiber inspection:

i. Confirm that all fiber cables are plugged in correctly.

ii. Confirm that spare fiber sockets have a dust cap installed.

h. Radio inspection:

CAUTION: Electrical hazard is present when working with wiring and connections. Perform the following steps with care.

i. Inspect the radio for the following conditions:

1. Ethernet cable is connected.

a. If Ethernet cable is not connected, plug in the Ethernet cable and reference the procedures above for (c.) Ethernet switch wiring and connections inspection.

2. Radio and antenna are free of cracks or chips.

a. If a radio or antenna are cracked:

i. Check to see if radio is still in working order with reference to the radio manufacturer's instruction manual.

ii. If the radio is not in working order, contact the Maintenance Supervisor to replace the antenna or replace the radio with one that is programmed specifically for that well site.

3. Powered inspection:

a. Check that the POE unit LED indicator lights to confirm the POE unit is functioning.

i. If not functioning, inspect cables.

ii. If cables are in good condition, troubleshoot the POE with reference to the manufacturer's instruction manual. If further maintenance is required, contact the Maintenance Supervisor.

b. Check the back of the radio and antenna to make sure power light indicator is lit.

i. If not powered, inspect cables. Reconnect or replace with new cable as needed.

i. Ventilation/cooling inspection:

CAUTION: Electrical hazard is present when working with wiring and connections. Perform the following steps with care.

i. Visually inspect ventilation/cooling for the following conditions:

1. Ventilation is powered.
2. Ventilation filter is intact.

CAUTION: Make sure to power down ventilation before cleaning.

a. Use vacuum and dry cloth to clean as needed.

i. Clean or replace filter(s) as needed.

b. Power ventilation back up.

Standard Operating Procedure
PG&E Topock Power Supply, Distribution and Communication Operation and Maintenance Plan

Title: Remote Well(s) Panel Inspection and Maintenance

Number: PWR-SOP-04_Rev0

Creation Date: 7/22/2014

1 Background and Scope

Pacific Gas and Electric Company (PG&E) is implementing a groundwater remedy near the intersection of Park Moabi Road and Interstate 40, approximately 12 miles southeast of Needles, California at the PG&E Topock Compressor Station (TCS).

The objective of this Standard Operating Procedure (SOP) is to describe the procedures for inspecting and maintaining the remote well panels. The remote well panels are located at select well locations. Each remote well panel is a distribution point for data collected by analytical equipment for display and recording purposes via the Supervisory Control and Data Acquisition (SCADA) system. The procedures include maintenance of the Solar Photovoltaic (PV) System which is a source of secondary power supply located at select remote well locations.

All procedures are to be performed by appropriately trained electrical technicians. Only arc-flash qualified technicians are authorized to open electrical enclosures and perform work within them.

The manufacturer's installation and operation manual should be referenced while performing O&M procedures.

If unsuitable conditions of the remote wells are observed at any time throughout the procedure, the technician should attempt to fix them, if feasible. If the conditions cannot be fixed, the technician should contact the Maintenance Supervisor after performing the inspection to determine how to proceed.

2 Drawing Numbers

- Not applicable

3 Equipment and Supplies List

- Health and Safety Plan
- Appropriate personal protective equipment (PPE), including appropriately caloric-rated Nomex clothing, gloves, and face protection
- Vehicle for mobilization to the site
- Battery manufacturer's installation and operation manual
- Power supply manufacturer's instruction manual

- Multimeter
- For (c.) Ethernet switch wiring and connections inspection:
  - Replacement Ethernet cable
- For (d.) Wiring and connection inspection:
  - Brush
  - Screwdrivers and wire cutter
- For (e.) Panel cleaning and (g.) Ventilation/cooling inspection:
  - Dry cloth
  - Hand vacuum
  - Alcohol-based cleaning product (for panel cleaning)
- For (f.) Radio inspection:
  - Radio manufacturer's instruction manual
  - Power over Ethernet (POE) unit manufacturer's instruction manual
- For (g.) Ventilation/cooling inspection:
  - Replacement ventilation filter
- For (h.) Battery inspection and (j.) Battery voltage check:
  - Replacement batteries
  - Dry towel (for battery inspection)
- For (i.) Battery cleaning:
  - Dry cloth
  - Damp cloth
  - Spray bottle filled with deionized (DI) water
  - Spray bottle filled with DI water mixed with baking soda
  - Metal brush (do not use metal files)
  - Petroleum jelly or grease, if necessary (to prevent battery corrosion)
- For (k.) Solar panel cleaning:
  - Spray bottle filled with DI water
  - Non-abrasive dry cloth

4 Procedures

a. Panel visual inspection:

CAUTION: Electrical hazard is present when working inside the communication panel. Perform the following steps with care.

i. Inspect the wire connections for the following conditions:
   - Loose wires.
   - Burnt wires.
   - Flashing red lights or no power lights on.

ii. Inspect for broken or damaged equipment.

iii. Inspect alignment of panel and door.

iv. Inspect panel anchorage.

v. Inspect ground connection.

vi. Inspect all painted surfaces for corrosion, chips or gouges, and heat damage.

vii. Inspect all labels to make sure they are intact.

viii. Inspect all duct seals.

ix. Inspect caulking around base of panel.

x. Inspect concrete equipment pad for damage and standing water.

b. Power supply voltage check:

CAUTION: Electrical hazard is present when working with the power supply. Perform the following steps with care.

CAUTION: Working in AC voltage setting can be dangerous, and using a multi-meter in the AC voltage setting is not recommended.

i. Check power supply voltage. Use multi-meter and make sure voltage is within ±1 volt of 24 volts DC.

1. Plug the multimeter black probe into the “COM” port.
2. Plug the multimeter red probe into the “mAVΩ” port.
3. Set the multimeter to “200V” in the DC (direct current) range.
4. Connect the multimeter to the power supply as specified in the power supply manufacturer’s instruction manual.
5. Check to see if the voltage is within 23 to 25 volts.
6. If voltage is not within 23 to 25 volts, troubleshoot the power supply as instructed in the manufacturer’s instruction manual.
7. If further maintenance or replacement is required, contact the Maintenance Supervisor.

c. Ethernet switch wiring and connections inspection:

i. Inspect the Ethernet switch unit for power.

ii. Inspect the Ethernet cables for damage.

iii. Check that all cables are plugged in securely.

iv. Reconnect or replace cables as needed.

d. Wiring and connections inspection:

CAUTION: Electrical hazard is present when working with wiring and connections. Perform the following steps with care.

i. Use a brush to wipe away any accumulated dirt/dust on wiring and connections.

ii. Inspect wiring installations for any cracks, breaks or deterioration in the insulation/conduits.

iii. Inspect panel boxes for the following:
- Rodents/insects and/or their nests.
- No excessive moisture is present.

iv. Inspect connections for any corrosion and/or burning.

v. Check that switches do not spark when turned on or off.

vi. If unsuitable conditions exist that cannot be immediately resolved, contact the Maintenance Supervisor to procure replacement equipment and schedule the replacement work.

e. Panel cleaning:

CAUTION: Electrical hazard is present when working inside the communication panel. Perform the following steps with care.

i. Remove insects or rodents and their nests.

ii. Vacuum out all debris, dirt, and/or sand.

iii. Use cloth with alcohol-based cleaning product to wipe down panel.

f. Radio inspection:

CAUTION: Electrical hazard is present when working with wiring and connections. Perform the following steps with care.

i. Inspect the radio for the following conditions:

1. Ethernet cable is connected.

a. If Ethernet cable is not connected, plug in the Ethernet cable and reference the procedures above for (c.) Ethernet switch wiring and connections inspection.

2. Radio and antenna are free of cracks or chips.

a. If a radio or antenna are cracked:

i. Check to see if radio is still in working order with reference to the radio manufacturer's instruction manual.

ii. If the radio is not in working order, contact the Maintenance Supervisor to replace the antenna or replace the radio with one that is programmed specifically for that well site.

3. Powered inspection:

a. Check that the POE unit is powered up.

i. If not powered, inspect cables.

ii. If cables are in good condition, troubleshoot the POE with reference to the manufacturer's instruction manual. If further maintenance is required, contact the Maintenance Supervisor.

b. Check the back of the radio and antenna to make sure power light indicator is lit.

i. If not powered, inspect cables. Reconnect or replace with new cable as needed.

g. Ventilation/cooling inspection:

CAUTION: Electrical hazard is present when working with wiring and connections. Perform the following steps with care.

i. Visually inspect ventilation/cooling for the following conditions:

1. Ventilation is powered.

2. Ventilation filter is intact.

CAUTION: Make sure to power down ventilation before cleaning.

a. Use vacuum and dry cloth to clean as needed.

i. Clean or replace filter(s) as needed.

b. Power ventilation back up.

h. Battery inspection:

CAUTION: Electrical hazard present when handling the batteries. Perform the following steps with care.

i. Inspect the batteries for the following conditions:

1. Batteries are charging.

a. If batteries are not charging, troubleshoot with reference to the procedures below for (j.) Battery voltage check, (m.) Inverter/battery charger and charge controller inspection, and (n.) PV System wiring and connections inspection.

2. Batteries are dry.

a. If batteries are wet, carefully wipe down the outside of the battery with a dry towel.

3. Batteries are free of cracks.

a. If a battery is cracked: Use CAUTION while inspecting and handling the battery. Reference the manufacturer's installation and operation manual and follow the steps to remove the battery from the solar PV system and replace it with the spare battery. Dispose of the cracked battery in accordance with the Hazardous Materials Business Plan.

4. Batteries are free of corrosion (typically white coating) at the terminals or connectors.

a. If corrosion is observed, refer to (i.) Battery cleaning Step vi below.

i. Battery cleaning:

CAUTION: Electrical hazard is present when handling the batteries. Perform the following steps with care.

i. Switch off/disconnect all loads (devices powered by the battery system).

ii. Turn off or disconnect the solar charge.

iii. Turn off the circuit breaker to and from the battery bank.

iv. Ensure that the caps on the batteries are sealed tight to keep any dirt from entering the battery.

v. Wipe the top and outside of the battery with a damp cloth.

vi. If corrosion is present at the terminals:

1. Apply water and baking soda solution to the affected area and wipe with a damp cloth.
2. Stubborn areas should be scrubbed with a metal brush (NOT metal file).
3. After cleaning, rinse the terminals with water.
4. Apply petroleum jelly or grease to the connected terminal to prevent future corrosion.

vii. Use a dry cloth to dry any wetted areas on the battery to ensure that it is safe to connect to loads and solar charge.

viii. CAREFULLY reconnect the loads to the system.

ix. Verify that positive and negative battery terminals are wired properly (see manufacturer's instruction manual).

x. Turn on or reconnect the solar charge.

xi. Turn on the circuit breaker to and from the battery bank.

xii. Check that the battery is properly connected and functioning.

xiii. Move to the next cell, if applicable, and repeat the procedure.

j. Battery voltage check:

CAUTION: Electrical hazard is present when working with batteries and multimeter. Perform the following steps with care.

i. Connect the multimeter's positive lead to the battery's positive terminal and the negative lead to the negative battery terminal.

ii. If the battery voltage is not between 11 and 13 volts, the battery must be replaced. Reference the manufacturer's installation and operation manual and follow the steps to remove the battery from the solar PV system and replace it with the spare battery. Dispose of the cracked battery in accordance with the Hazardous Materials Business Plan.

k. Solar panel cleaning:

i. Clean solar panels using distilled water (or de-ionized water) and a dry cloth.

ii. Do not use a metal brush or detergents to clean solar panel surface.

l. Solar panel visual inspection:

i. It is optimal to perform visual inspections of the solar panels after they have been cleaned.

ii. Inspect that the panel is standing upright (not fallen over) and the surface is generally facing south.

iii. Inspect the glass surface of the panel for the following:

1. Glass surface is clean.
    a. If surface of glass is dirty, clean with reference to the procedure above for (k.) Solar panel cleaning.
2. Glass surface is intact (parts have not been lost/stolen).
3. Glass surface is free of cracks and chips.
4. Glass surface is free of de-lamination.
5. Glass surface is free of fogged glazing.
6. Glass surface is free of water leaks.
7. Glass surface is free of discoloration.

iv. Inspect the array mounting frame for the following:

1. Frame bolts are free of rust.
2. Frame bolts are free of damage.
3. Array mounting frame and glass solar panels are firmly secured.

v. Inspect that the wires in the junction boxes for the following:

1. Wires are not chewed by rodents or insects.
2. No excessive moisture is present.

vi. If unsuitable conditions exist that cannot be immediately resolved, contact the Maintenance Supervisor to procure replacement equipment and/or schedule the replacement work.

m. Inverter/battery charger and charge controller inspection:

CAUTION: Electrical hazard is present when working with inverter/battery charger and charge controller. Perform the following steps with care.

i. Use a dry cloth to wipe away any accumulated dirt/dust.

ii. Inspect the inverter/battery charger and charge controller for the following:

1. All the indicators such as LED lights are working.
2. Wires leading to and from this device are not loose.
3. Check that the charge controller indicates that the system is charging when the sun is up.

Standard Operating Procedure
PG&E Topock SCADA
Operation and Maintenance Plan

Title: HMI/SCADA Application Backup and Cleaning

Number: SCADA-SOP-01_Rev1

Creation Date: 7/18/2014

1 Background and Scope

Pacific Gas and Electric Company (PG&E) is implementing a groundwater remedy near the intersection of Park Moabi Road and Interstate 40, approximately 12 miles southeast of Needles, California at the PG&E Topock Compressor Station (TCS).

The objective of this Standard Operating Procedure (SOP) is to describe the procedures for backup and restoration of an installed and fully functional Proficy iFIX human/machine interface (HMI)/supervisory control and data acquisition (SCADA) program. A Proficy iFIX HMI/SCADA system is an open architecture, highly scalable HMI system ranging from simple data entry and validation to total supervisory monitoring and controlling of all plant process data. It provides real time visual information management.

All procedures are to be performed by appropriately trained information technology (IT) technicians. Only qualified technicians are authorized to open electrical enclosures and perform work within them.

The manufacturer's iFIX manuals should be referenced while performing these procedures. The procedures are for iFIX HMI/SCADA software version 5.1 or above.

If unsuitable conditions of the data file transfers are observed at any time throughout the procedure, the operator should attempt to back up and/or restore the files, if feasible. If the data file transfer(s) cannot be fixed, the operator should document the error code, filename, directory, etc. and contact the Maintenance Supervisor to determine how to proceed.

2 Drawing Numbers

- Not applicable

3 Equipment and Supplies List

- Health and Safety Plan
- Manufacturer's iFIX manuals
- For (1.) Manually Back Up iFIX HMI/SCADA Files:
  - Blank CD-ROM or DVD media diskette(s) or portable USB hard disk drive or portable USB flash drive that has sufficient available storage space to perform backup
- For (4.) SCADA/HMI Computer Internal Cleaning:

- Slightly damp lint-free cloth wipe
- Household detergent, if necessary
- Hand vacuum
- LCD screen cleaning cloth and formula

4 Procedures

1. Manually Back Up iFIX HMI/SCADA Files:

1.1. Verify the iFIX HMI/SCADA system computer is “On” and the HMI/SCADA application is running, as follows:

1.1.1. To verify that the iFIX HMI/SCADA system computer is “On,” confirm that the LED light on the front panel of the computer is illuminated blue.

NOTE: If the computer is “Off,” the LED light will not be illuminated.

1.1.2. To verify that the HMI/SCADA application is running:

1. Verify the “iFIX Workspace” icon is on the Windows taskbar.
2. Click the iFIX Workspace icon.
3. Confirm that the HMI/SCADA application appears.

1.2. Export a report of the security configuration:

NOTE: Passwords are not exported with the security configuration report; you must re-enter the passwords manually. This policy is for security purposes.

1.2.1. Open iFIX System Configuration Utility (SCU) application:

1. Click the Windows Start button
2. Click on “All Programs”
3. Click on “Proficy HMI SCADA – iFIX”
4. Click on the “System Configuration” application

- The SCU application will open

1.2.2. On the “Configure” menu, click “Security”.

- The Security Configuration dialog box appears

NOTE: If “Security” is grayed out and cannot be clicked, the system is not set up for security; in this case skip Step 1.2 (Export a report of the security configuration) and proceed to Step 1.3 (Copying iFIX HMI/SCADA files).

1.2.3. On the “File” menu, click “Export”

- The “Select” dialog box appears

1.2.4. Browse to the folder “C:\Program Files\Proficy\Proficy iFIX\LOCAL”

1.2.5. Save the exported file as “Security.RPT” by selecting the “Save” button

1.3. Copying iFIX HMI/SCADA files:

1.3.1. Insert the backup media CD-ROM, DVD, USB HDD, or USB Flash Drive.

1.3.2. Open Windows Explorer:

1. Click the Windows Start button
2. Click “All Programs”
3. Click “Accessories”

4. Click on the “Windows Explorer” application
    - The Windows Explorer application appears.

1.3.3. Verify media storage device has sufficient available storage space to perform backup.

1.3.4. Create a folder named for today’s date (e.g., “2014-07-15”) onto the backup media.

1.3.5. Create new subfolders within the date folder with the following titles:

- HTR
- HTRDATA
- LOCAL
- PIC
- PDB
- RCC
- RCM

1.3.6. Navigate to the SCADA systems “HTR” folder. The default location is “C:\Program Files\Proficy\Proficy iFIX\HTR”; however, your system could be different.

1.3.7. Select and copy all of the .CSV, .CFG and .DAT files.

1.3.8. Paste these files onto the backup media in the HTR folder you created in Steps 1.3.4-1.3.5.

1.3.9. Navigate to the SCADA systems “HTRDATA” folder. The default location is “C:\Program Files\Proficy\Proficy iFIX\HTRDATA”; however, your system could be different.

1.3.10. Select and copy all of the .H04, .H08 and/or .H24 files.

1.3.11. Paste these files onto the backup media in the HTRDATA folder you created in Steps 1.3.4-1.3.5.

1.3.12. Navigate to the SCADA systems “LOCAL” folder. The default location is “C:\Program Files\Proficy\Proficy iFIX\LOCAL”; however, your system could be different.

1.3.13. Select and copy the Security.RPT file, if it exists.

- If the Security.RPT file does not exist because it was determined in Step 1.2 that the system is not set up for security, skip to Step 1.3.15.

1.3.14. Paste this file onto the backup media in the LOCAL folder you created in Steps 1.3.4-1.3.5.

1.3.15. Navigate to the SCADA systems “PIC” folder. The default location is “C:\Program Files\Proficy\Proficy iFIX\PIC”; however, your system could be different.

1.3.16. Select and copy all of the .GRF, .TGD and User.FXG files.

1.3.17. Paste these files onto the backup media in the PIC folder you created in Steps 1.3.4-1.3.5.

1.3.18. Export the existing iFIX process database:

1. Click the iFIX Workspace icon.
2. Confirm that the HMI/SCADA application appears.
3. Press CTRL + W to enter the iFIX Workspace.
4. Verify the “System Tree” is shown on the left by clicking the “Workspace” pulldown menu. If a check mark is shown to the left of “System Tree” the System Tree will be shown. If not, click the “System Tree”. Note: Clicking System Tree menu option turns the tree on or off.

5. In the iFIX Workspace, navigate to the top of the System Tree and find the folder “Database”.
6. Expand the Database folder by double-clicking onto the folder or by clicking the “+” next to the folder.
7. Double-click on "Database Manager". The “Proficy iFIX Database Manager” appears.
8. When the Database Manager opens, it will ask you what node you wish to view.
9. Select “Open Local Node” and click OK.
10. Once the database is loaded in the Database Manager, click the “Export” icon at the top of the screen. The “Save As” dialog window appears.
11. Use the default name and path (“C:\Program Files\Proficy\Proficy iFIX\PDB”) for the export file or provide a new file name and path for the export Process Database file.
12. Go to the “Save As Type” field and select the CSV Files (*.CSV) format.

    Note: All file formats allow any ASCII editor to open/modify this file.
13. Click the “Save” button.
14. Close the Proficy iFIX Database Manager by clicking the “X” at the top right-hand corner of the application.
15. From the iFIX Workspace press CTRL + W to “Switch to Run” mode.

1.3.19. Export/Save the Input/Output (I/O) driver configuration file(s):

1. Open the iFIX SCU application as described in Step 1.2.1.
2. Click the pulldown menu “Configure”.
3. Click “SCADA”, the SCADA Configuration dialog box appears.
4. In the Configured I/O Drivers area, select the I/O driver you would like to export/save. Note: Perform this procedure on all I/O drivers installed on the system.
5. Click the “Configure” button. The driver configuration application appears.
6. Click the pulldown menu “File”.
7. Click “Save As…” to open the dialog box.
8. Navigate to the SCADA systems “PDB” folder (C:\Program Files\Proficy\Proficy iFIX\PDB) and click “Save”.
9. Close the driver configuration application by clicking the “X” at the top right-hand corner of the application.
10. Click “Cancel” on the SCADA Configuration dialog box.
11. Click the pulldown menu “File” and click “Exit” to close the SCU application.

1.3.20. Navigate to the SCADA systems “PDB” folder. The default location is “C:\Program Files\Proficy\Proficy iFIX\PDB”; however, your system could be different.

1.3.21. Select and copy all of the .CSV, .AAD, .PDB, .EVS, .ABR, and .MB1 files.

1.3.22. Paste these files onto the backup media in the PDB folder you created in Steps 1.3.4-1.3.5.

1.3.23. Navigate to the SCADA systems “RCC” folder. The default location is “C:\Program Files\Proficy\Proficy iFIX\RCC”; however, your system could be different.

1.3.24. Select and copy all files within the folder.

1.3.25. Paste these files onto the backup media in the RCC folder you created in Steps 1.3.4-1.3.5.

1.3.26. Navigate to the SCADA systems "RCM" folder. The default location is "C:\Program Files\Proficy\Proficy iFIX\RCM"; however, your system could be different.

1.3.27. Select and copy all files within the folder.

1.3.28. Paste these files onto the backup media in the RCM folder you created in Steps 1.3.4-1.3.5).

2. Backup of iFIX HMI/SCADA Files Using the "iFIX Backup and Restore" Application:

NOTE: A Full Backup includes all of your iFIX files. The default location is "C:\Program Files\Proficy\Proficy iFIX\...":

- ALM path (*.*)
- APP path (*.*)
- HTR path (*.*)
- HTRDATA path (*.*)
- LOCAL path (*.*)
- PDB path (*.*)
- PIC path (*.*)
- RCC path (*.*)
- RCM path (*.*)

2.1. To back up and restore driver configuration files, the driver must be installed and properly configured in the SCU's SCADA Configuration dialog box. Open the SCU application as described in Step 1.2.1.

2.2. Click the pulldown menu "SCADA".

2.3. In the Configured I/O Drivers area, verify a driver is installed.

- If a driver is not installed, contact your System Administrator and/or SCADA Developer. However, you may proceed with the Backup and Restore wizard.

2.4. Be aware that configuration files for 7.x series drivers saved outside of the iFIX database directory will not be backed up with the Backup and Restore Wizard. If you installed iFIX to the default location, the path to the iFIX database directory is: C:\Program Files\Proficy\Proficy iFIX\PDB. (Follow Step 1.3.19 [Export/Save the I/O Driver Configuration file(s)] to properly save the driver configuration files to the correct directory.)

2.5. Access the Backup and Restore wizard:

1. Click the Windows Start button
2. Click All Programs
3. Click Proficy HMI SCADA – iFIX
4. Click Tools
5. Click Backup and Restore Wizard

NOTE: You can also access the application by locating and running the BackupRestore.exe file in the Proficy iFIX folder, which is the folder where you installed iFIX.

2.6. In the Backup and Restore Wizard main screen, select the Full Backup option.

2.7. Click the Backup button.

2.8. Enter a backup file path and filename into the field or browse to select one. This file path should be pointed to the backup media.

NOTE: By default, the wizard will select the path C:\Program Files\Proficy\Proficy iFIX\ProjectBackup\ nodename.FBK.

2.9. Click the Finish button to begin archiving all of your files onto the backup media.

3. SCADA/HMI Computer Hard Disk Drive Space Check:

3.1. Select the Windows Start button and Click “Computer”.

- The Windows Explorer application appears.

3.2. Click on Computer in the left Explorer window pane.

- A list of the Hard Disk Drives appears in the right window pane.

3.3. Verify and note the total disk space available on all drives.

4. SCADA/HMI Computer Internal Cleaning:

4.1. Close all running applications.

4.2. Shut the computer off by selecting the Windows Start button and Shutdown.

4.3. Disconnect the power cable from the back of the computer.

CAUTION: When cleaning the back of the computer, make sure not to disconnect any cables, connectors, or plugs that are connected besides the power plug/cable.

4.4. Using a slightly damp lint-free cloth wipe, clean the metal/plastic case that houses the PC components.

- For stubborn stains, add a little household detergent to the cloth. Do not use a solvent cleaner on plastics.

4.5. Verify all vents and air holes are free of hair and/or lint by rubbing the cloth over the holes and vents. Vacuum around each of the hole, vents, and crevices of the computer.

4.6. Remove the computer case door to access the internal computer components.

4.7. Use a hand vacuum to remove all lint, dust, hair, and etc. from inside the computer case.

CAUTION: Spraying compressed air into a fan or cleaning a fan with a vacuum may cause damage.

4.8. Install the computer case door.

4.9. Use a vacuum and/or damp lint-free cloth to remove lint, dust, hair, dirt, etc. from the keyboard.

4.10. Clean the LCD monitor screen with an LCD cleaning cloth. If a dry cloth does not completely clean the screen, apply LCD cleaning formula and wipe the screen gently.

4.11. Plug in the power cable.

4.12. Turn on the computer by pressing the “On” button.

Standard Operating Procedure
PG&E Topock SCADA
Operation and Maintenance Plan

Title: SCADA Historian Backup and Cleaning

Number: SCADA-SOP-02_Rev0

Creation Date: 7/18/2014

1 Background and Scope

Pacific Gas and Electric Company (PG&E) is implementing a groundwater remedy near the intersection of Park Moabi Road and Interstate 40, approximately 12 miles southeast of Needles, California at the PG&E Topock Compressor Station (TCS).

The objective of this Standard Operating Procedure (SOP) is to describe the procedures for backup of the Proficy Historian. Proficy Historian is a plant-wide data historian that collects, archives, and distributes large volumes of real-time information quickly and easily.

All procedures are to be performed by appropriately trained information technology (IT) technicians. Only qualified technicians are authorized to open electrical enclosures and perform work within them.

The manufacturer's Proficy Historian manuals should be referenced while performing these procedures. The procedures in this SOP are for Proficy Historian software version 5.0 or above.

If unsuitable conditions of the data file transfers are observed at any time throughout the procedure, the operator should attempt to back up and/or restore them, if feasible. If the data file transfer(s) cannot be fixed, the operator should document the error code, filename, directory, etc. and contact the Maintenance Supervisor to determine how to proceed.

2 Drawing Numbers

- Not applicable

3 Equipment and Supplies List

- Health and Safety Plan
- Manufacturer's Proficy Historian manuals
- Blank CD-ROM or DVD media diskette(s) or portable USB hard disk drive or portable USB flash drive that has sufficient available storage space to perform backup
- Lint-free cloth wipe

- LCD cleaning cloth and formula
- Water
- Rubbing alcohol
- Hand vacuum

4 Procedures

1. Proficy Historian Manual File Backup:

   1.1. Verify the Proficy Historian system computer is “On” and the Proficy Historian application is running, as follows:

      1.1.1. To verify that the Proficy Historian system computer is “On,” confirm that the LED light on the front panel of the computer is illuminated blue.

      NOTE: If the computer is “Off,” the LED light will not be illuminated.

      1.1.2. To verify that the Proficy Historian application is running:

         a. Verify the “Proficy Historian” icon is on the Windows taskbar.
         b. Click the Proficy Historian icon.
         c. Confirm that the Proficy Historian application appears.

   1.2. Copying Proficy Historian files:

      1.2.1. Insert the backup media CD-ROM, DVD, USB HDD, or USB Flash Drive.

      1.2.2. Create a folder of today’s date (e.g., “ 2014-07-15”) onto the backup media.

      1.2.3. Create a new subfolder within the date folder called “HISTORIAN ARCHIVE.”

      1.2.4. Open Windows Explorer application:

         1. Click the Windows Start button
         2. Click “All Programs”
         3. Click “Accessories”
         4. Click on the “Windows Explorer” application

            - The Windows Explorer application appears.

      1.2.5. Navigate to the Historian ”Archives” folder. The default location is “C:\Program Files\GEFanuc\Proficy Historian\Archives”; however, your system could be different.

      1.2.6. Select and copy all of the files.

      1.2.7. Paste these files onto the backup media in the HISTORIAN ARCHIVE folder you created earlier (see Step 1.2.3 above).

2. Historian Server Computer Hard Disk Drive Space Check:

   2.1. Select the Windows Start button and Click “Computer.” The Windows Explorer application appears.

   2.2. Click on Computer in the left window pane. A list of the Hard Disk Drives appears in the right window pane.

   2.3. Verify and note the total disk space available on all drives.

3. Historian Server Computer Internal Cleaning:

   3.1. Close all running applications.

3.2. Shut the computer off by selecting the Windows Start button and Shutdown.

3.3. Disconnect the power cable from the back of the computer.

CAUTION: When cleaning the back of the computer, make sure not to disconnect any cables, connectors, or plugs that are connected besides the power plug/cable.

3.4. Using a slightly damp lint-free cloth wipe, clean the metal/plastic case that houses the PC components.

- For stubborn stains, add a little household detergent to the cloth. Do not use a solvent cleaner on plastics.

3.5. Verify all vents and air holes are free of hair and/or lint by rubbing the cloth over the holes and vents. Vacuum around each of the hole, vents, and crevices of the computer.

3.6. Remove the computer case door to access the internal computer components.

3.7. Use a hand vacuum to remove all lint, dust, hair, and etc. from inside the computer case.

CAUTION: Spraying compressed air into a fan or cleaning a fan with a vacuum may cause damage.

3.8. Install the computer case door.

3.9. Use a vacuum and/or damp lint-free cloth to remove lint, dust, hair, dirt, etc. from the keyboard.

3.10. Clean the LCD monitor screen with an LCD cleaning cloth. If a dry cloth does not completely clean the screen, apply LCD cleaning formula and wipe the screen gently.

3.11. Plug in the power cable.

3.12. Turn on the computer by pressing the “On” button.

Standard Operating Procedure
PG&E Topock Moabi Regional Park CHQ
Operation and Maintenance Plan

Title: Offsite Hauling of Wastewater
Number: CHQ-SOP-01_Rev0
Creation Date: 2/2/2015

1 Background and Scope

Pacific Gas and Electric Company (PG&E) is implementing a groundwater remedy near the intersection of Park Moabi Road and Interstate 40, approximately 12 miles southeast of Needles, California at the PG&E Topock Compressor Station (TCS).

The objective of this Standard Operating Procedure (SOP) is to describe the procedure to transfer accumulated non-hazardous wastewater from the 1,000 gallon remedy-produced water tank at the Construction Headquarters (CHQ) yard at Moabi Regional Park to a subcontracted tanker truck.

2 Drawing Numbers

- C-15-01: Construction Headquarters Yard Plan
- C-15-06: Civil Details

3 Equipment

- Appropriate PPE
- Health and Safety Plan
- 5-gallon buckets
- Spill kit
- Water hose
- Wheel chocks to be placed behind tanker truck tires

4 Procedure

1. Loading site preparation
    - 1.1 Inspect subcontractor parking area for signs of settling or wear
    - 1.2 Confirm that load-out hose is properly stored and not in the path of trucks entering the loading area
    - 1.3 Visually inspect load-out hose for signs of wear
    - 1.4 Confirm that necessary hoses and connections are present

2. Truck staging and hook-up

2.1 Instruct truck driver not to exceed 5 miles per hour (mph) while driving inside the CHQ yard

2.2 Confirm that driver and equipment meet job requirements

1. Verify that the driver has completed a pre-trip inspection on the truck and trailer
2. Verify that the driver currently driving the truck is the same driver who performed the pre-trip inspection

NOTE: If any deficiencies are discovered per Step 2.2, contact the Maintenance Supervisor before proceeding.

2.3 Use a spotter to direct truck driver during approach and alignment of truck near utility pad

1. Spotter to use hand signals to stop truck when the front of the trailer is in position
2. Ensure that there is enough room between the truck and fence for access

2.4 Place wheel chocks behind truck tires once truck is parked

2.5 Place 5-gallon bucket under trailer's inlet connection

2.6 Have driver hook up to the load-out hose

NOTE: Driver is responsible for:

- Attaching the load-out hose to the truck
- Making sure the truck tank is vented
- Determining how many gallons are to be loaded
- Disconnecting the load-out hose
- Operating the load valve (trailer valve) on the truck

Operator is responsible for:

- All valves upstream of the load-out hose
- Telling the driver how many gallons have been loaded
- Turning the remedy-produced water tank transfer pump on and off

2.7 Connect load-out hose to the dry-break coupling on the remedy-produced water tank

2.8 Manually check that pipe, hose, and connections are secure

1. Secure any loose connections

2.9 Place 5-gallon buckets under hose connections in transfer equipment

2.10 Have driver check truck valves and vents

2.11 Confirm with driver that truck is ready to receive water

2.12 Operator will turn on the remedy-produced water tank transfer pump

1. Turn the hand-off-auto switch on the pump panel to "AUTO"
2. Operator to visually inspect for leaks
3. Operator to monitor the level in the tank

4. Operator to instruct the driver when the tank is empty
5. Operator to place the hand-off-auto switch into the “OFF” mode to stop pump

2.13 Have driver close the trailer valve

3. Truck disconnection
   - 3.1 Confirm that 5-gallon buckets are under hose connection points
   - 3.2 Have driver open connection to truck (water will be in hose)
   - 3.3 Have driver disconnect load-out hose from trailer valve
   - 3.4 Disconnect load-out hose from the cam-lock coupling
   - 3.5 Allow load-out hose to drain into 5-gallon buckets
   - 3.6 Remove any adapters used
   - 3.7 Have driver replace trailer valve cap or plug
   - 3.8 Have driver close drip tray valve
   - 3.9 Remove 5-gallon buckets from under connection points
   - 3.10 Empty 5-gallon buckets into containment pad sump
   - 3.11 Store equipment (hose, adapters, buckets) properly
4. Shipping documentation preparation (for offsite disposal as applicable)
   - 4.1 Confirm that appropriate forms are filled out and signed
   - 4.2 Confirm that shipping documentation is complete and signed
   - 4.3 Confirm that shipping documentation number is recorded
   - 4.4 Provide driver with appropriate copies
5. Truck demobilization
   - 5.1 Work with driver to inspect that truck is in safe condition
   - 5.2 Confirm that hose, buckets, and other equipment have been removed from path of truck exiting the loading area
   - 5.3 Unchock tires
   - 5.4 Remind driver to stay under 5 mph while inside the CHQ yard
   - 5.5 Instruct driver to exit the utility pad area
   - 5.6 Spot driver out to the main road
6. Post-transfer system checks
   - 6.1 Scan/file paperwork/shipping documentation (as applicable)

Standard Operating Procedure
PG&E Topock Moabi Regional Park CHQ
Operation and Maintenance Plan

Title: Truck Decontamination
Number: CHQ-SOP-02_Rev0
Creation Date: 2/2/2015

1 Background and Scope

Pacific Gas and Electric Company (PG&E) is implementing a groundwater remedy near the intersection of Park Moabi Road and Interstate 40, approximately 12 miles southeast of Needles, California at the PG&E Topock Compressor Station (TCS).

The objective of this Standard Operating Procedure (SOP) is to describe the procedure for decontamination of construction- or operation and maintenance-related trucks at the decontamination pad located in the Construction Headquarters (CHQ) yard at Moabi Regional Park. Water transfer from the decontamination pad sump to a 1,000 gallon remedy-produced water tank is automated.

2 Drawing Numbers

- C-15-01: Construction Headquarters Yard Plan
- C-15-03: Construction Headquarters Piping Plan
- S-15-20: CHQ Decontamination Pad Plans and Details

3 Equipment

- Appropriate PPE
- Health and Safety Plan
- Spill kit
- Water hose
- Wheel chocks to be placed behind truck tires

4 Procedure

1. Decontamination pad preparation
    - 1.1 Inspect pad for signs of settling or wear
    - 1.2 Confirm that necessary hoses are present
2. Truck staging and hook-up

2.1 Instruct truck driver not to exceed 5 miles per hour (mph) while driving inside the CHQ yard

2.2 Confirm that driver and equipment meet job requirements

1. Verify that the driver has completed a pre-trip inspection on the truck and trailer
2. Verify that the driver currently driving the truck is the same driver who performed the pre-trip inspection

NOTE: If any deficiencies are discovered per Step 2.2, contact the Maintenance Supervisor before proceeding.

2.3 Use a spotter to direct truck driver during approach and alignment of truck in the middle of the decontamination pad

1. Spotter to use hand signals to stop truck when the front of the trailer is in position

3. Decontamination

3.1 Verify tank level within 1,000 gallon buried remedy-produced water tank prior to decon to confirm there is available space for decon water

3.2 Verify the sump water level is drained (sump pump automatically runs)

3.3 Use potable water from 5,000 gallon potable water tanks in the utility area to decontaminate truck

1. Connect hose to the yard hydrant fed from the potable water tanks
2. Spray exterior of truck to remove dust and debris
3. Spray under carriage of vehicle
4. Spray wheelwells and behind tires

3.4 Wait for water to cease dripping from truck

1. Verify tires are dry and will not track out of the decontamination area

3.5 **IF** the sump level rises to the high level setpoint for the pump **THEN** verify the pump is operational and discharging to the 1,000 gallon buried remedy-produced water tank

4. Truck demobilization

4.1 Work with driver to inspect that truck is in safe condition

4.2 Confirm that hose, buckets, and other equipment have been removed from exit path of truck from loading area

4.3 Unchock tires

4.4 Remind driver to stay under 5 mph while inside the CHQ yard

4.5 Instruct driver to exit the decontamination pad heading north

4.6 Spot driver during exit to the main road

Standard Operating Procedure
PG&E Topock Moabi Regional Park CHQ
Operation and Maintenance Plan

Title: Generator Inspection
Number: CHQ-SOP-03_Rev0
Creation Date: 2/2/2015

1 Background and Scope

Pacific Gas and Electric Company (PG&E) is implementing a groundwater remedy near the intersection of Park Moabi Road and Interstate 40, approximately 12 miles southeast of Needles, California at the PG&E Topock Compressor Station (TCS).

The objective of this Standard Operating Procedure (SOP) is to describe the procedure for inspecting the backup generator located at the Construction Headquarters (CHQ) yard at Moabi Regional Park. Inspections will be conducted on a weekly basis. Personnel conducting inspections and maintenance must be qualified persons in regards to NFPA 70E for arc flash. Additional information can be found in the health and safety plan.

2 Drawing Numbers

- C-15-01: Construction Headquarters Yard Plan
- C-15-06: Civil Details

3 Equipment

- Appropriate PPE
- Health and Safety Plan
- Spill kit
- 5-gallon buckets
- 55-gallon drum

4 Procedure

1. Mobilize to utility pad enclosure
    - 1.1 Have spill kit in the event of a noted spill
    - 1.2 Open fence to utility pad area
2. Visually inspect generator
    - 2.1 Walk around entire unit
    - 2.2 Check for:
        1. Leaks along equipment surfaces
        2. Accumulated liquid on the ground

3. Signs of vandalism

CAUTION: Prior to accessing the generator interior qualified personnel shall put on arc flash PPE

4. Open panels or access doors

2.3 Check fuel tank

1. Verify fuel gauge level
    a. Schedule refueling through maintenance supervisor if level is below ½ tank
2. Collect a fuel sample and analyze for water and bacterial growth annually if fuel stored for longer than 1 year
3. Inspect fuel tank secondary containment
    a. Check for accumulated liquid
    b. Drain any accumulated liquid into 5-gallon bucket
        (1) Dispose of any collected water (no oil contamination) in the decontamination pad sump
        (2) Collect any oil-contaminated water in appropriately-labeled 55-gallon drum
    c. Clear secondary containment of any debris

2.4 Check battery

1. Verify distilled water level in battery cells, if applicable
2. Inspect battery terminals for evidence of corrosion or tightness

2.5 **IF** a leak is detected **THEN**:

1. Immediately alert maintenance supervisor of leak
2. Apply spill kit to spill area
3. Await further instruction from maintenance supervisor

3. Start generator manually

3.1 **IF** generator fails to start **THEN**:

1. Immediately alert maintenance supervisor
2. Await further instruction from maintenance supervisor

4. Complete load testing per manufacturer's recommendations
5. Complete housekeeping tasks

5.1 Clear any debris from utility pad area

5.2 Check condition of traffic bollards around tank

1. Photograph safety bollards that appear to have been hit or damaged
2. Alert maintenance supervisor of damaged bollards

6. Demobilize from utility pad area

6.1 Report findings to maintenance supervisor

Standard Operating Procedure
PG&E Topock Moabi Regional Park CHQ
Operation and Maintenance Plan

Title: Potable Water Delivery
Number: CHQ-SOP-04_Rev0
Creation Date: 2/2/2015

1 Background and Scope

Pacific Gas and Electric Company (PG&E) is implementing a groundwater remedy near the intersection of Park Moabi Road and Interstate 40, approximately 12 miles southeast of Needles, California at the PG&E Topock Compressor Station (TCS).

The objective of this Standard Operating Procedure (SOP) is to describe the procedure for a subcontracted delivery truck to enter the Construction Headquarters (CHQ) yard at Moabi Regional Park and discharge potable water from the truck to the potable water tank.

2 Drawing Numbers

- C-15-01: Construction Headquarters Yard Plan
- C-15-06: Civil Details

3 Equipment

- Appropriate PPE
- Health and Safety Plan
- 5-gallon buckets
- Water hose
- Wheel chocks to be placed behind delivery truck tires

4 Procedure

1. Loading site preparation
    1.1 Inspect subcontractor parking area for signs of settling or wear
    1.2 Confirm that necessary hoses and connections are present
2. Truck staging and hook-up

2.1 Verify the truck that arrives says Potable Water on it

1. Request paperwork to verify water is potable

2.2 Instruct truck driver not to exceed 5 miles per hour (mph) while driving in the CHQ yard

2.3 Confirm that driver and equipment meet job requirements

1. Verify that the driver has completed a pre-trip inspection on the truck and trailer
2. Verify that the driver currently driving the truck is the same driver who performed the pre-trip inspection

NOTE: If any deficiencies are discovered per Step 2.2, contact the Maintenance Supervisor before proceeding.

2.4 Use a spotter to direct truck driver during approach and alignment of truck near potable water tank

1. Spotter to use hand signals to stop truck when the front of the trailer is in position
2. Ensure that the truck is not blocking access

2.5 Establish a work zone to ensure traffic hazards in the area are mitigated

2.6 Place wheel chocks behind truck tires once truck is parked

2.7 Place 5-gallon bucket under trailer's outlet connection

2.8 Have driver hook up to the load-out hose

NOTE: Driver is responsible for:

1. Attaching the load-out hose to the truck
2. Making sure the truck tank is vented
3. Determining how many gallons are to be offloaded
4. Operating the load valve (trailer valve) on the truck
5. Disconnecting the load-out hose

Operator is responsible for:

1. All valves downstream of the load-out hose
2. Telling the driver how many gallons the tank can receive
3. Monitoring the potable water tank level

2.9 Connect load-out hose to the coupling on the potable water tank

2.10 Manually check that pipe, hose, and connections are secure

1. Secure any loose connections

2.11 Place 5-gallon buckets under hose connections in transfer equipment

2.12 Have driver check truck valves and vents

2.13 Confirm with driver that truck is ready to discharge water

2.14 Instruct the driver to begin discharge to the tank

1. Operator to visually inspect for leaks
2. Operator to monitor the level in the tank
3. Operator to instruct the driver when the tank is nearly full
4. Driver to stop discharge when instructed

2.15 Have driver close the trailer valve

3. Truck disconnection

3.1 Confirm that 5-gallon buckets are under hose connection points

3.2 Have driver open connection to truck (water may still be in the hose)

3.3 Have driver disconnect load-out hose from trailer valve

3.4 Disconnect load-out hose from the cam-lock coupling

3.5 Allow load-out hose to drain into 5-gallon buckets

3.6 Remove any adapters used

3.7 Have driver replace trailer valve cap or plug

3.8 Have driver close drip tray valve

3.9 Remove 5-gallon buckets from under connection points

3.10 Empty 5-gallon buckets into decontamination sump

3.11 Store equipment (hose, adapters, buckets) properly

4. Truck demobilization

4.1 Work with driver to inspect that truck is in safe condition

4.2 Confirm that hose, buckets, and other equipment have been removed from path of truck exiting the loading area

4.3 Unchock tires

4.4 Remind driver to stay under 5 mph while in the CHQ yard

4.5 Instruct driver to exit the utility pad area

4.6 Spot driver out to the main road

5. Post-transfer system checks

5.1 Scan/file paperwork

Standard Operating Procedure
PG&E Topock Moabi Regional Park CHQ
Operation and Maintenance Plan

Title: Offsite Hauling of Sewage
Number: CHQ-SOP-05_Rev0
Creation Date: 2/2/2015

1 Background and Scope

Pacific Gas and Electric Company (PG&E) is implementing a groundwater remedy near the intersection of Park Moabi Road and Interstate 40, approximately 12 miles southeast of Needles, California at the PG&E Topock Compressor Station (TCS).

The objective of this Standard Operating Procedure (SOP) is to describe the procedure for a subcontracted vacuum truck to enter the Construction Headquarters (CHQ) yard at Moabi Regional Park and remove accumulated sewage from the subsurface sewage tanks.

2 Drawing Numbers

- C-15-01: Construction Headquarters Yard Layout
- C-15-03 Construction Headquarters Piping Plan

3 Equipment

- Appropriate PPE
- Health and Safety Plan
- 5-gallon buckets
- Spill kit
- Water hose
- Wheel chocks to be placed behind vacuum truck tires

4 Procedure

1. Loading site preparation
    1.1 Inspect subcontractor parking area for signs of settling or wear
    1.2 Confirm that necessary hoses and connections are present

2. Truck staging and hook-up

2.1 Instruct truck driver not to exceed 5 miles per hour (mph) while in the CHQ yard

2.2 Confirm that driver and equipment meet job requirements

1. Verify that the driver has completed a pre-trip inspection on the truck (and trailer, if applicable)
2. Verify that the driver currently driving the truck is the same driver who performed the pre-trip inspection

NOTE: If any deficiencies are discovered per Step 2.2, contact the Maintenance Supervisor before proceeding.

2.3 Use a spotter to direct truck driver during approach and alignment of truck near underground sewage tank

1. Spotter to use hand signals to stop truck when the front of the truck (or trailer) is in position
2. Ensure that the truck is not blocking access

2.4 Establish a work zone to ensure traffic hazards in the area are mitigated

2.5 Place wheel chocks behind truck tires once truck is parked

2.6 Place 5-gallon bucket under trailer's inlet connection as applicable

2.7 Have driver hook up to the load-out hose

NOTE: Driver is responsible for:

- Attaching the load-out hose to the truck
- Making sure the truck tank is vented
- Determining how many gallons are to be loaded
- Disconnecting the load-out hose
- Operating the load valve on the truck/trailer

Operator is responsible for:

- All valves upstream of the load-out hose
- Telling the driver how many gallons have been loaded

2.8 Connect load-out hose to the coupling on the sewage tank

2.9 Manually check that pipe, hose, and connections are secure

1. Secure any loose connections

2.10 Place 5-gallon buckets under hose connections in transfer equipment

2.11 Have driver check truck valves and vents

2.12 Confirm with driver that truck is ready to receive sewage

2.13 Instruct the driver to begin vacuum on the tank

1. Operator to visually inspect for leaks
2. Operator to monitor the level in the tank
3. Operator to instruct the driver when the tank is empty
4. Driver to stop vacuum when instructed

2.14 Have driver close the load valve

3. Truck disconnection
   - 3.1 Confirm that 5-gallon buckets are under hose connection points
   - 3.2 Have driver open connection to truck (sewage may still be in the hose)
   - 3.3 Have driver disconnect load-out hose from load valve
   - 3.4 Disconnect load-out hose from the cam-lock coupling
   - 3.5 Allow load-out hose to drain into sewage tank or 5-gallon buckets
   - 3.6 Remove any adapters used
   - 3.7 Have driver replace load valve cap or plug
   - 3.8 Have driver close drip tray valve
   - 3.9 Remove 5-gallon buckets from under connection points
   - 3.10 Empty 5-gallon buckets into truck
   - 3.11 Store equipment (hose, adapters, buckets) properly
4. Truck demobilization
   - 4.1 Work with driver to inspect that truck is in safe condition
   - 4.2 Confirm that hose, buckets, and other equipment have been removed from path of truck exiting the loading area
   - 4.3 Unchock tires
   - 4.4 Remind driver to stay under 5 mph while in the CHQ yard
   - 4.5 Spot driver out to the main road
5. Post-transfer system checks
   - 5.1 Scan/file paperwork

Appendix C
Select Equipment O&M Manuals

(Provided on CD-ROM Only)

APPENDIX C

Select Equipment O&M Manuals

This appendix contains the following equipment O&M manuals for the Final Groundwater Remedy at Topock Compressor Station:

- Extraction, injection, freshwater supply, and freshwater injection well pumps (Grundfos)
- Hose pumps (Bredel)
- Sand separator (Lakos)
- Centrifugal pumps (Fybroc)
- Centrifugal pumps (AMT)
- Chemical metering pumps (LMI)
- Sump pumps (Goulds)
- Air-operated diaphragm pump (ARO)
- Seal water system (Goulds)
- Cartridge filters (Harmsco)
- Air compressor (Gardner)
- Flow control valves (ASR)
- Transformers (Cooper)
- Electrical power generator (Capstone)
- Mini-split air conditioner and condenser (Mitsubishi)
- Heat pump chiller (Multiaqua)

SP

Stainless steel submersible pumps

6", 8", and 10"

Installation and operating instructions

US



LIMITED WARRANTY

US

Products manufactured by GRUNDFOS PUMPS CORPORATION (Grundfos) are warranted to the original user only to be free of defects in material and workmanship for a period of 18 months from date of installation, but not more than 24 months from date of manufacture. Grundfos' liability under this warranty shall be limited to repairing or replacing at Grundfos' option, without charge, F.O.B. Grundfos' factory or authorized service station, any product of Grundfos' manufacture. Grundfos will not be liable for any costs of removal, installation, transportation, or any other charges which may arise in connection with a warranty claim. Products which are sold but not manufactured by Grundfos are subject to the warranty provided by the manufacturer of said products and not by Grundfos' warranty. Grundfos will not be liable for damage or wear to products caused by abnormal operating conditions, accident, abuse, misuse, unauthorized alteration or repair, or if the product was not installed in accordance with Grundfos' printed installation and operating instructions.

To obtain service under this warranty, the defective product must be returned to the distributor or dealer of Grundfos' products from which it was purchased together with proof of purchase and installation date, failure date, and supporting installation data. Unless otherwise provided, the distributor or dealer will contact Grundfos or an authorized service station for instructions. Any defective product to be returned to Grundfos or a service station must be sent freight prepaid; documentation supporting the warranty claim and/or a Return Material Authorization must be included if so instructed.

GRUNDFOS WILL NOT BE LIABLE FOR ANY INCIDENTAL OR CONSEQUENTIAL DAMAGES, LOSSES, OR EXPENSES ARISING FROM INSTALLATION, USE, OR ANY OTHER CAUSES. THERE ARE NO EXPRESS OR IMPLIED WARRANTIES, INCLUDING MERCHANTABILITY OR FITNESS FOR A PARTICULAR PURPOSE, WHICH EXTEND BEYOND THOSE WARRANTIES DESCRIBED OR REFERRED TO ABOVE.

Some jurisdictions do not allow the exclusion or limitation of incidental or consequential damages and some jurisdictions do not allow limit actions on how long implied warranties may last. Therefore, the above limitations or exclusions may not apply to you. This warranty gives you specific legal rights and you may also have other rights which vary from jurisdiction to jurisdiction.

Original installation and operating instructions.

CONTENTS

		Page
1.	**Product introduction**	**3**
1.1	Symbols used in this document	3
1.2	Introduction	3
1.3	Delivery and handling	3
1.4	Applications	4
1.5	Features and benefits	4
1.6	Identification	4
2.	**Operating conditions**	**4**
3.	**Installation**	**4**
3.1	Pre-installation checklist	4
3.2	Preparation	4
3.3	Splicing the motor cable	6
3.4	Riser pipe	7
3.5	Electrical	8
4.	**Startup**	**11**
4.1	Startup with three-phase motors	11
5.	**Operation**	**12**
6.	**Troubleshooting**	**12**
6.1	Preliminary tests	13
6.2	Checking pump performance	14
6.3	Troubleshooting chart	15
7.	**Technical data**	**19**
7.1	Minimum water flow requirements for submersible pump motors	19
7.2	Guide for engine-driven generators in submersible pump applications	19
7.3	Transformer capacity required for three-phase submersible pump motors	20
7.4	Submersible pump cable selection chart (60 Hz)	21
7.5	Three-phase motor maximum cable length	22
7.6	Electrical data	24
8.	**Disposal**	**26**
9.	**Removal and fitting of cable guard**	**27**

Warning

Prior to installation, read these installation and operating instructions. Installation and operation must comply with local regulations and accepted codes of good practice.

This booklet should be left with the owner of the pump for future reference and information regarding its operation.

Warning

The use of this product requires experience with and knowledge of the product. Persons with reduced physical, sensory or mental capabilities must not use this product, unless they are under supervision or have been instructed in the use of the product by a person responsible for their safety.

Children must not use or play with this product.

US

1. Product introduction

1.1 Symbols used in this document

Warning

If these safety instructions are not observed, it may result in personal injury!

Caution ***If these safety instructions are not observed, it may result in malfunction or damage to the equipment!***

Note ***Notes or instructions that make the job easier and ensure safe operation.***

1.2 Introduction

Your Grundfos SP submersible pump is of the utmost quality. Combined with proper installation, your Grundfos pump will give you many years of reliable service.

To ensure the proper installation of the pump, carefully read the complete manual before attempting to install the pump.

1.3 Delivery and handling

1.3.1 Delivery

Caution ***The pumps should remain in the packing until they are placed in vertical position during installation.***

The shipping carton should contain:

- pump end
- motor
- cable
- control box
- nameplate.

Examine the components carefully to make sure no damage has occurred to the pump end, motor, cable or control box during shipment.

1.3.2 Handling

Your Grundfos SP pump should remain in its shipping carton until it is ready to be installed. The carton is specially designed to protect it from damage.

During unpacking and prior to installation, **make sure that the pump is not dropped or mishandled.**

The motor is equipped with an electrical cable.

US

Caution ***Under no circumstance should the electrical cable be used to support the weight of the pump.***

You will find a loose data plate with an adhesive backing with the pump. The nameplate should be completed in pen and attached to the control box.

1.4 Applications

Grundfos Large SP submersible pumps are suitable for:

- Groundwater supply to waterworks
- irrigation in horticulture and agriculture
- groundwater lowering (dewatering)
- pressure boosting
- industrial applications
- domestic water supply.

1.5 Features and benefits

- State-of-the-art hydraulics provide high efficiency and low operating costs.
- 100 % stainless steel components inside and outside for long service life.
- Sand resistant.
- Resistant to aggressive water.
- Motor burnout protection via CU 301.
- Dry-running protection.
- Monitoring, protection and communication via protection unit MP204, and remote control, R100.

1.6 Identification

1.6.1 Type key

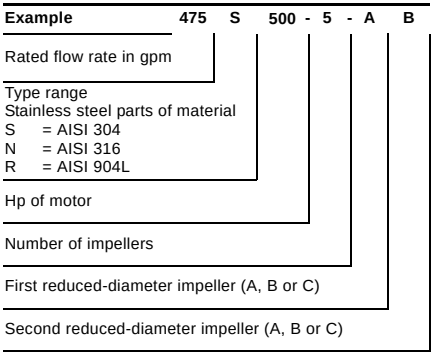

2. Operating conditions

Flow (Q):	Max. 1,400 gpm (318 m^3/h)
Head (H):	Max. 2,100 ft (640 m)
Liquid temp:	+ 32 °F to + 140 °F (0 °C to +60 °C)
Install. depth	Max. 1,968 ft (599 m)

3. Installation

3.1 Pre-installation checklist

Before beginning installation, the following checks should be made:

- Condition of the well
- condition of the water
- installation depth
- electrical supply
- wire cable type.

These checks are all critical for the proper installation of this submersible pump.

3.1.1 Condition of the well

If the pump is to be installed in a new well, the well should be fully developed and bailed or blown free of cuttings and sand. The stainless steel construction of the Grundfos submersible make it resistant to abrasion; however, no pump, made of any material, can forever withstand the destructive wear that occurs when constantly pumping sandy water.

If this pump is used to replace an oil-filled submersible or oil-lubricated line-shaft turbine in an existing well, **the well must be blown or bailed clear of oil.**

Determine the maximum depth of the well, and the draw-down level at the pump's maximum capacity. Pump selection and setting depth should be based on this data.

The inside diameter of the well casing should be checked to ensure that it is not smaller than the size of the pump and motor.

3.1.2 Pumped liquids

Submersible pumps are designed for pumping clear and cold water that is free of air and gasses and clean, thin **non-explosive** liquids without solid particles or fibers. Decreased pump performance and life expectancy can occur if the water is not cold and clear or contains air and gasses.

Maximum water temperature should not exceed +102 °F (+38 °C). Special consideration must be given to the pump and motor if it is to be used to pump water above 102 °F (+38 °C).

The Grundfos stainless steel submersible is highly resistant to the normal corrosive environment found in some water wells. If water well tests determine the water has an excessive or unusual corrosive quality, or exceeds 102 °F (+38 °C), contact your Grundfos representative for information concerning specially designed pumps for these applications.

3.2 Preparation



Warning

Before starting work on the pump, make sure that the electricity supply has been switched off and that it cannot be accidentally switched on.

3.2.1 Checking of liquid in motor

The SP submersible motors are factory-filled with a special non-poisonous liquid, which is frost-proof down to –4 °F (–20 °C).

Note ***The level of the liquid in the motor must be checked and the motor must be refilled, if required. Use clean water.***

Caution ***If frost protection is required, special Grundfos liquid must be used to refill the motor. Otherwise clean water may be used for refilling (however, never use distilled water).***

Refilling of liquid is carried out as described below.

3.2.2 Grundfos submersible motors MS 4000 and MS 402

The filling hole for motor liquid is placed in the following positions:

MS 4000: in the top of the motor.

MS 402: in the bottom of the motor.

1. Position the submersible pump as shown in fig. 1.
   The filling screw must be at the highest point of the motor.
2. Remove the screw from the filling hole.
3. Inject liquid into the motor with the filling syringe, fig. 1, until the liquid runs back out of the filling hole.
4. Replace the screw in the filling hole and tighten securely before changing the position of the pump.

Torques:

MS 4000: 3.0 Nm.

MS 402: 2.0 Nm.

The submersible pump is now ready for installation.

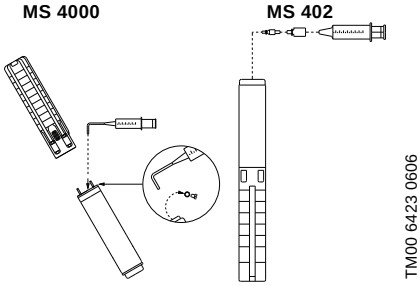

Fig. 1 Pump position during filling – MS 4000 and MS 402

3.2.3 Grundfos submersible motors MS6 and MS 6000

- If the motor is delivered from stock, the liquid level must be checked before the motor is fitted to the pump, see fig. 2.
- On pumps delivered directly from Grundfos, the liquid level has already been checked.
- In the case of service, the liquid level must be checked, see fig. 2.

Filling procedure:

The filling hole for motor liquid is placed at the top of the motor.

1. Position the submersible pump as shown in fig. 2.
   The filling screw must be at the highest point of the motor.
2. Remove the screw from the filling hole.
3. Inject liquid into the motor with the filling syringe, fig. 2, until the liquid runs back out of the filling hole.
4. Replace the screw in the filling hole and tighten securely before changing the position of the pump.

Torque: 3.0 Nm.

The submersible pump is now ready for installation.

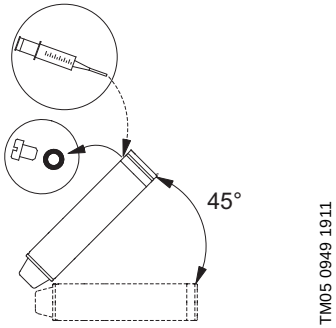

Fig. 2 Motor position during filling – MS6 and MS 6000

3.2.4 Grundfos submersible motors MMS 6000, MMS 8000, MMS 10000 and MMS 12000

Filling procedure:

1. Place the motor at a 45 ° angle with the top of the motor upwards, see fig. 3.
2. Unscrew the plug A and place a funnel in the hole.
3. Pour tap water into the motor until the motor liquid inside the motor starts running out at A.
   Caution: Do not use motor liquid as it contains oil.
4. Remove the funnel and refit the plug A.

Caution ***Before fitting the motor to a pump after a long period of storage, lubricate the shaft seal by adding a few drops of water and turning the shaft.***

The submersible pump is now ready for installation.

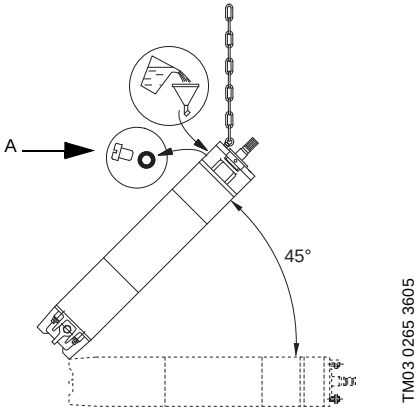

Fig. 3 Motor position during filling – MMS

3.2.5 Installation depth

A check should be made to ensure that the installation depth of the pump will always be at least (5) five to (10) ten feet (1.5 to 3 m) below the maximum draw-down level of the well. For flow rates exceeding 100 gpm (22.7 m^3/h), refer to performance curves for recommended minimum submergence.

The bottom of the motor should never be installed lower than the top of the well screen or within five feet of the well bottom.

If the pump is to be installed in a lake, pond, tank or large diameter well, the water velocity passing over the motor must be sufficient to ensure proper motor cooling. The minimum recommended water flow rates which ensure proper cooling are listed in section *7.1 Minimum water flow requirements for submersible pump motors* on p. 19.

3.2.6 Electrical supply

The motor voltage, phase and frequency indicated on the motor nameplate should be checked against the actual electrical supply.

3.2.7 Wire cable type

The wire cable used between the pump and control box or panel should be approved for submersible pump applications. The conductor may be solid or stranded. The cable may consist of individually insulated conductors twisted together, insulated conductors molded side by side in one flat cable or insulated conductors with a round overall jacket.

The conductor insulation should be type RW, RUW, TW, TWU or equivalent and must be suitable for use with submersible pumps. An equivalent Canadian Standards Association certified wire may also be used. See section *7.4 Submersible pump cable selection chart (60 Hz)* on p. 21 for recommended sizes of cable lengths.

3.3 Splicing the motor cable

Note ***A good cable splice is critical to proper operation of the submersible pump and must be done with extreme care.***

If the splice is carefully made, it will work as well as any other portion of the cable, and will be completely watertight. Grundfos recommends using a heat shrink splice kit. The splice should be made in accordance with the kit manufacturer's instructions. Typically a heat shrink splice can be made as follows:

1. Examine the motor cable and the drop cable carefully for damage.
2. Cut the motor leads off in a staggered manner. Cut the ends of the drop cable so that the ends match up with the motor leads; see fig. 4. On single-phase motors, be sure to match the colors.
3. Strip back and trim off 1/2 inch of insulation from each lead, making sure to scrape the wire bare to obtain a good connection. Be careful not to damage the copper conductor when stripping off the insulation.
4. Slide the heat shrink tubing on to each lead. Insert a properly sized "Sta-kon" type connector on each lead, making sure that lead colors are matched. Using a "Sta-kon" crimping pliers, indent the lugs; see fig. 5. Be sure to squeeze hard on the pliers, particularly when using large cable.
5. Center the heat shrink tubing over the connector. Using a propane torch, lighter, or electric heat gun, uniformly heat the tubing starting first in the center working towards the ends; see fig. 6.
6. Continue to apply the heat to the tubing using care not to let the flame directly contact the tubing. When the tubing shrinks and the sealant flows from the ends of the tubing, the splice is complete; see fig. 7.

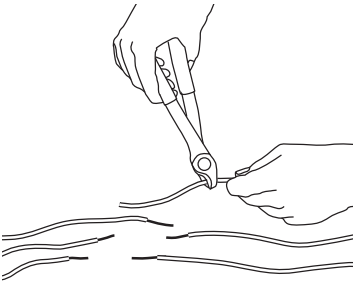

Fig. 4 Cutting and stripping the motor leads

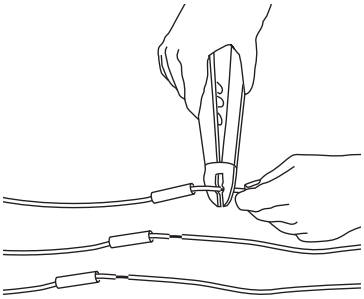

Fig. 5 Crimping the connectors

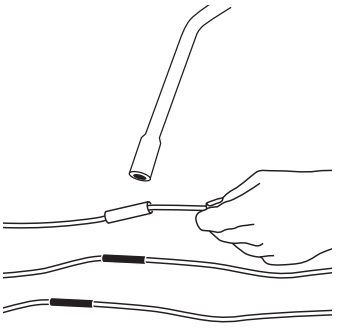

Fig. 6 Applying heat to the connector

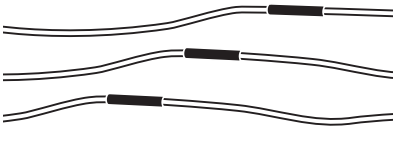

Fig. 7 Completed splices

3.4 Riser pipe

Note

The riser pipe or hose should be properly sized and selected based on estimated flow rates and friction-loss factors.

3.4.1 If an adapter is required

It is recommended to first install the drop pipe to the pipe adapter. Then install the drop pipe with the adapter to the pump discharge.

A back-up wrench should be used when the riser pipe is attached to the pump. The pump should be gripped only by the flats on the top of the discharge chamber. The body of the pump, cable guard or motor should not be gripped under any circumstance.

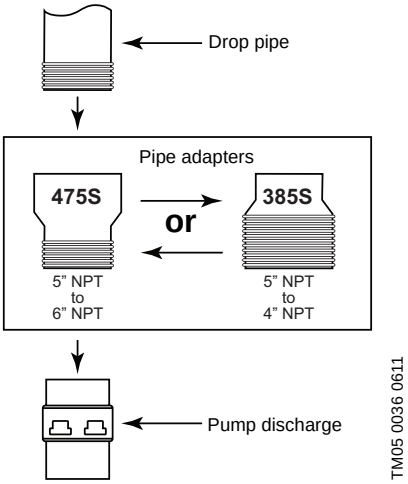

Fig. 8 Pipe adapters

3.4.2 If steel riser pipe is used

We recommend that steel riser pipes always be used with the larger submersibles. An approved pipe thread compound should be used on all joints. Make sure the joints are adequately tightened in order to resist the tendency of the motor to loosen the joins when stopping and starting.

When tightened, the first section of the riser pipe must not come in contact with the check valve retainer in the discharge chamber of the pump.

After the first section of the riser pipe has been attached to the pump, the lifting cable or elevator should be clamped to the pipe. **Do not clamp the pump.**

When raising the pump and riser section, be careful not to place bending stress on the pump by picking it up by the pump end only.

Make sure that the electrical cables are not cut or damaged in any way when the pump is being lowered in the well.

The drop cable should be secured to the riser pipe at frequent intervals to prevent sagging, looping or possible cable damage. Nylon cable clips or waterproof tape may be used. The cable splice should be protected by securing it with clips or tape just above and below the splice.

3.4.3 If plastic or flexible riser pipe is used

It is recommended that plastic type riser pipe be used only with the smaller domestic submersibles.

Caution

When plastic riser pipe is used, it is recommended that a safety cable be attached to the pump to lower and raise it.

Warning

Important: Plastic and flexible pipe tend to stretch under load. This stretching must be taken into account when securing the cable to the riser pipe. Leave 3 to 4 inches of slack between clips or taped points to allow for this stretching. This tendency for plastic and flexible pipe to stretch will also affect the calculation of the pump setting depth. As a general rule, you can estimate that plastic pipe will stretch to approximately 2 % of its length. For example, if you installed 200 feet (61 m) of plastic riser pipe, the pump may actually be down 204 feet (62 m). If the depth setting is critical, check with the manufacturer of the pipe to determine who to compensate for pipe stretch.

Note

The pipe manufacturer or representative should be contacted to insure the pipe type and physical characteristics are suitable for this use.

Use the correct joint compound recommended by the pipe manufacturer. In addition to making sure that joints are securely fastened, the use of a torque arrester is recommended when using plastic pipe.

Do not connect the first plastic or flexible riser section directly to the pump. Always attach a metallic nipple or adapter into the discharge chamber of the pump. When tightened, the threaded end of the nipple or adapter must not come in contact with the check valve retainer in the discharge chamber of the pump.

The drop cable should be secured to the riser pipe at frequent intervals to prevent sagging, looping and possible cable damage. Nylon cable clips or waterproof tape may be used. The cable splice should be protected by securing it with clips or tape just above each joint.

Check valves:

A check valve should always be installed at the surface of the well. In addition, for installations deeper than 200 feet (61 m), check valves should be installed at no more than 200 foot (61 m) intervals.

Protect the well from contamination:

To protect against surface water entering the well and contaminating the water source, the well should be finished off above grade, and a locally approved well seal or pitless adapter unit utilized.

3.5 Electrical

Warning



USA: All electrical work should be performed by a qualified electrician and installed in accordance with the National Electrical Code, local codes and regulations.

Warning



Canada: All electrical work should be performed by a qualified electrician and installed in accordance with the Canadian Electrical Code, local codes and regulations.

Warning



To reduce the risk of electrical shock during operation of this pump requires the provision of acceptable grounding. If the means of connection to the supply connected box is other than grounded metal conduit, ground the pump back to the service by connecting a copper conductor, at least the size of the circuit supplying the pump, to the grounding screw provided within the wiring compartment.

Verification of the electrical supply should be made to ensure the voltage, phase and frequency match that of the motor. Motor voltage, phase, frequency and full-load current information can be found on the nameplate attached to the motor.

Motor electrical data can be found in section *7.6.1 Grundfos submersible pump motors - 60 Hz* on p. 24.



Warning

If voltage variations are larger than +/-10%, do not operate the pump.

Direct on-line starting is used due to the extremely fast run-up time of the motor (0.1 second maximum), and the low moment of inertia of the pump and motor. Direct on-line starting current (locked rotor amp) is between 4 and 6.5 times the full-load current.

If direct on-line starting is not acceptable and reduced starting current is required, an autotransformer or resistant starters should be used for 5 to 30 Hp motors (depending on cable length). For motors over 30 Hp, use auto-transformer starters.

3.5.1 Engine-driven generators

If the submersible pump is going to be operated using an engine driven generator, we suggest the manufacturer of the generator be contracted to ensure the proper generator is selected and used. See section *7.2 Guide for engine-driven generators in submersible pump applications* on p. 19 for generator sizing guide.

If power is going to be supplied through transformers, section *7.3 Transformer capacity required for three-phase submersible pump motors* on p. 20 outlines the minimum KVA rating and capacity required for satisfactory pump operation.

3.5.2 Control box/panel wiring

Single-phase motors

Single-phase motors must be connected as indicated in the motor control box.

A typical single-phase wiring diagram using a Grundfos control box is shown in fig 9.

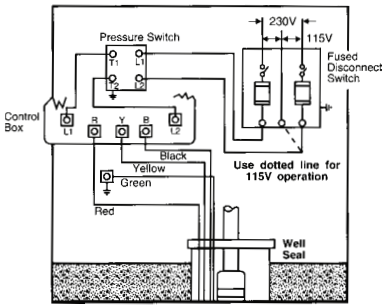

TM05 0037 0611

Fig. 9 Single-phase wiring diagram for Grundfos control boxes

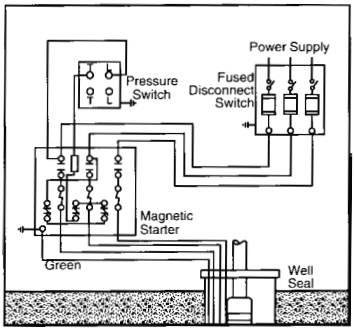

TM05 0038 0611

Fig. 10 Three-phase wiring diagram for Grundfos and Franklin motors

Three-phase motors

Three-phase motors must be used with the proper size and type of motor starter to ensure the motor is protected against damage from low voltage, phase failure, current unbalance and overload current.

A properly sized starter with ambient-compensated extra quick-trip overloads must be used to give the best possible motor winding protection.

Each of the three motor legs must be protected with overloads. The thermal overloads must trip in less than 10 seconds at locked rotor (starting) current. A three-phase motor wiring diagram is shown in fig. 10.

Caution ***Pumps should NEVER be started to check rotation unless the pump is totally submerged. Severe damage may be caused to the pump and motor if they are run dry.***

3.5.3 High voltage surge arresters

A high voltage surge arrester should be used to protect the motor against lightning and switching surges.

Lightning voltage surges in power lines are caused when lightning strikes somewhere in the area.

Switching surges are caused by the opening and closing of switches on the main high-voltage distribution power lines.

The correct voltage-rated surge arrester should be installed on the supply (line) side of the control box; see fig. 11 and fig. 12. The arrester must be grounded in accordance with the National Electrical Code and local codes and regulations.

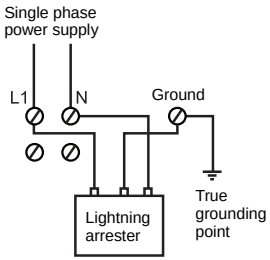

TM05 0039 0611

Fig. 11 Single-phase hookup

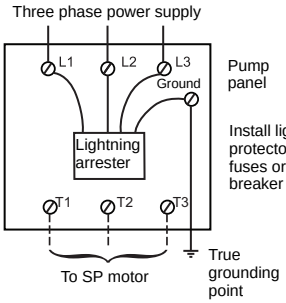

TM05 0040 0611

Fig. 12 Three-phase hookup

The warranty on all three-phase submersible motors is VOID if:

1. The motor is operated with single-phase power through a phase converter.

Note ***2. Three-leg ambient compensated extra quick-trip overload protectors are not used.***

3. Three-phase current unbalance is not checked and recorded; see section 4. Startup on p. 11.

4. High voltage surge arresters are not installed.

3.5.4 Control box/panel grounding

Warning

The control box or panel shall be permanently grounded in accordance with the National Electrical Code and local codes or regulations.

The ground wire should be a bare copper conductor at least the same size as the drop cable wire size.

The ground wire should be run as short a distance as possible and be securely fastened to a true grounding point.

True grounding points are considered to be:

- a grounding rod driven into the water strata
- steel well casing submerged into the water lower than the pump setting level
- steel discharge pipes without insulating couplings.

If plastic discharge pipe and well casing are used or if a grounding wire is required by local codes, a properly sized bare copper wire should be connected to a stud on the motor and run to the control panel.

Warning

Do not ground to a gas supply line. Connect the grounding wire to the ground point first and then to the terminal in the control box or panel.

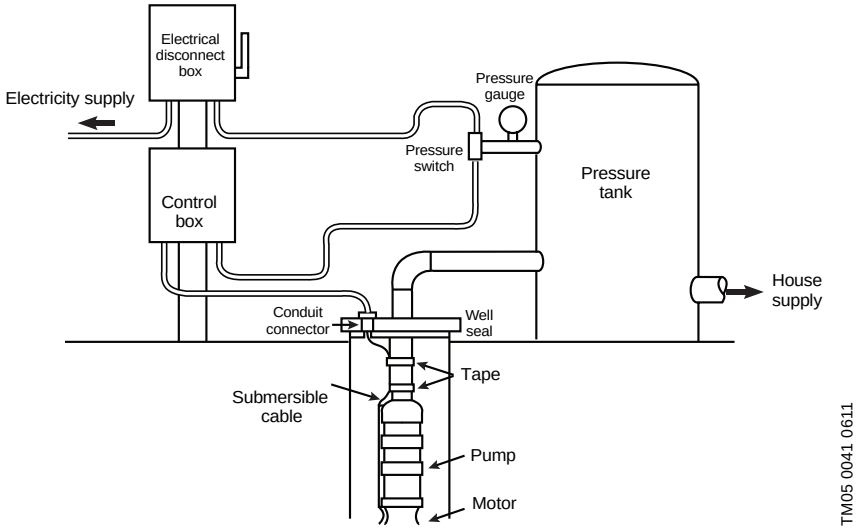

Fig. 13 Wiring and installation diagram

3.5.5 Wiring checks and installation

Before making the final surface wiring connection of the drop cable to the control box or panel, it is a good practice to check the insulation resistance to ensure that the cable and splice are good. Measurements for a new installation must be at least 2,000,000 ohm. **Do not start the pump if the measurement is less than this.**

If it is higher than 2,000,000 ohm, the drop cable should then be run through the well seal by means of a conduit connector in such a way as to eliminate any possibility of foreign matter entering the well casing.

Conduit should always be used from the pump to the control box or panel to protect the drop cable; see fig. 13.

Finish wiring and verify that all electrical connections are made in accordance with the wiring diagram.

Check to ensure the control box or panel and high voltage surge arrester have been grounded.

4. Startup

After the pump has been set into the well and the wiring connections have been made, the following procedures should be performed:

1. Attach a temporary horizontal length of pipe with installed gate valve to the riser pipe.
2. Adjust the gate valve one-third of the way open.
3. On three-phase units, check direction of rotation and current unbalance according to the instructions below. For single-phase units proceed directly to *4.1.3 Developing the well* on p. 11.
4. Under no circumstances should the pump be operated for any prolonged period of time with the discharge valve closed. This can result in motor and pump damage due to overheating. A properly sized relief valve should be installed at the well head to prevent the pump from running against a closed valve.

4.1 Startup with three-phase motors

4.1.1 Check the direction of rotation

Three-phase motors can run in either direction depending on how they are connected to the power supply. When the three cable leads are first connected to the power supply, there is a 50 % chance that the motor will run in the proper direction. To make sure the motor is running in the proper direction, carefully follow these procedures:

1. Start the pump and check the water quantity and pressure developed.
2. Stop the pump and interchange any two leads.
3. Start the pump and again check the water quantity and pressure.
4. Compare the results observed. The wire connection which gave the highest pressure and largest water quantity is the correct connection.

4.1.2 Check for current unbalance

Current unbalance causes the motor to have reduced starting torque, overload tripping, excessive vibration and poor performance which can result in early motor failure. It is very important that current unbalance be checked in all three-phase systems. **Current unbalance between the legs should not exceed 5 % under normal operating conditions.**

The supply power service should be verified to see if it is a two or three transformer system. If two transformers are present, the system is an “open” delta or wye. If three transformers are present, the system is true three-phase.

Make sure the transformer ratings in kilovolt amps (KVA) is sufficient for the motor load; see section *7.3 Transformer capacity required for three-phase submersible pump motors* on p. 20.

The percentage of current unbalance can be calculated by using the following formulas and procedures:

$$\text{Average current} = \frac{\text{Total of current values measured on each leg}}{3}$$

$$\text{\% Current unbalance} = \frac{\text{Greatest amp difference from the average}}{\text{average current}} \times 100$$

To determine the percentage of current unbalance:

1. Measure and record current readings in amps for each leg (Hookup 1). Disconnect power.
2. Shift or roll the motor leads from left to right so the drop cable lead that was on terminal 1 is now on 2, lead on 2 is now on 3, and lead on 3 is now on 1 (Hookup 2). Rolling the motor leads in this manner will not reverse the motor rotation. Start the pump, measure and record current reading on each leg. Disconnect power.
3. Again shift drop cable leads from left to right so the lead on terminal 1 goes to 2, 2 to 3 and 3 to 1 (Hookup 3). Start pump, measure and record current reading on each leg. Disconnect power.
4. Add the values for each hookup.
5. Divide the total by 3 to obtain the average.
6. Compare each single leg reading from the average to obtain the greatest amp difference from the average.
7. Divide this difference by the average to obtain the percentage of unbalance.

Use the wiring hookup which provides the lowest percentage of unbalance. See section *7.6.4 Correcting for three-phase power imbalance* on p. 25 for a specific example of correcting for three-phase power unbalance.

4.1.3 Developing the well

After proper rotation and current unbalance have been checked, start the pump and let it operate until the water runs clear of sand, silt and other impurities.

Slowly open the valve in small increments as the water clears until the desired flow rate is reached. Do not operate the pump beyond its maximum flow rating. **The pump should not be stopped until the water runs clear.**

If the water is clean and clear when the pump is first started, the valve should still be s**lowly opened until the desired flow rate is reached.** As the valve is being opened, the drawdown should be checked to ensure the pump is always submerged. **The dynamic water level should always be more than 3 feet (0.9 m)above the inlet strainer of the pump.**

Disconnect the temporary piping arrangements and complete the final piping connections.

US

Warning

Under no circumstances should the pump be operated for any prolonged period of time with the discharge valve closed. This can result in motor and pump damage due to overheating. A properly sized relief valve should be installed at the well head to prevent the pump from running against a closed valve.

Caution

Start the pump and test the system. Check and record the voltage and current draw on each motor lead.

5. Operation

The pump and system should be periodically checked for water quantity, pressure, drawdown, periods of cycling and operation of controls.

If the pump fails to operate, or there is a loss of performance, refer to section *6. Troubleshooting* on p. 12.

6. Troubleshooting

The majority of problems that develop with submersible pumps are electrical, and most of these problems can be corrected without pulling the pump from the well. The following chart covers most of the submersible service work. As with any troubleshooting procedure, start with the simplest solution first; always make all the above ground checks before pulling the pump from the well.

Usually only two instruments are needed:

- a combination voltmeter/ammeter
- an ohmmeter.

These are relatively inexpensive and can be obtained from most water systems suppliers.

Warning

WHEN WORKING WITH ELECTRICAL CIRCUITS, USE CAUTION TO AVOID ELECTRICAL SHOCK.



It is recommended that rubber gloves and boots be worn and that care is taken to have metal control boxes and motors grounded to power supply ground or steel drop pipe or casing extending into the well.

Warning



Submersible motors are intended for operation in a well. When not operated in a well, failure to connect motor frame to power supply ground may result in serious electrical shock.

6.1 Preliminary tests

US

Test	How to measure	What it means
Supply voltage 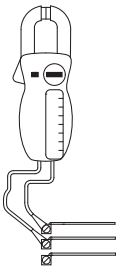 TM00 1371 5092	By means of a voltmeter, which has been set to the proper scale, measure the voltage at the control box or starter. • **On single-phase units,** measure between line and neutral. • **On three-phase units,** measure between the legs (phases).	When the motor is under load, the voltage should be within ± 10% of the nameplate voltage. Larger voltage variation may cause winding damage. Large variations in the voltage indicate a poor electrical supply and the pump should not be operated until these variations have been corrected. If the voltage constantly remains high or low, the motor should be changed to the correct supply voltage.
Current 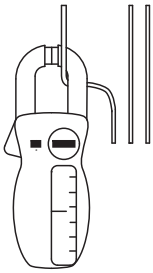 TM00 1372 5082	• By use of an ammeter, set on the proper scale, measure the current on each power lead at the control box or starter. See section *7.6 Electrical data* on p. 24 for motor amp draw information. • Current should be measured when the pump is operating at a constant discharge pressure with the motor fully loaded.	If the amp draw exceeds the listed service factor amps (SFA) or if the current unbalance is greater than 5 % between each leg on three-phase units, check for the following: • Burnt contacts on motor starter. • Loose terminals in starter or control box or possible cable defect. Check winding and insulation resistances. • Supply voltage too high or low. • Motor windings are shorted. • Pump is damaged, causing a motor overload.
Winding resistance 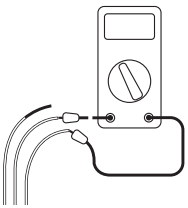 TM05 0028 0511	• Turn off power and disconnect the drop cable leads in the control box or starter. • Using an ohmmeter, set the scale selectors to Rx1 for values under 10 ohms and Rx10 for values over 10 ohms. • Zero-adjust the meter and measure the resistance between leads. Record the values. • Motor resistance values can be found in section *7.6 Electrical data* on p. 24. Cable resistance values are in section *7.6.5 Total resistance of drop cable (OHMS)* on p. 26.	If all the ohm values are normal, and the cable colors correct, the windings are not damaged. If any one ohm value is less than normal, the motors may be shorted. If any one ohm value is greater than normal, there is a poor cable connection or joint. The windings or cable may also be open. If some of the ohm values are greater than normal and some less, the drop cable leads are mixed. To verify lead colors, see resistance values in section *7.6 Electrical data* on p. 24.
Insulation resistance 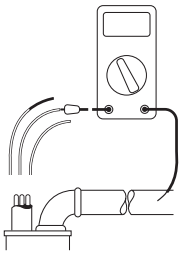 TM05 0029 0511	• Turn off power and disconnect the drop cable leads in the control box or starter. • Using an ohm or mega ohmmeter, set the scale selector to Rx 100K and zeroadjust the meter. • Measure the resistance between the lead and ground (discharge pipe or well casing, if steel).	For ohm values, refer to section *6.1.1 Ohm value chart* on p. 14. Motors of all hp, voltage, phase and cycle duties have the same value of insulation resistance.

6.1.1 Ohm value chart

Ohm value chart			
	Ohm value	**Megaohm value**	**Condition of motor and leads/ recommended procedure**
Motor not yet installed	2,000,000 (or more)	2.0	New motor.
	1,000,000 (or more)	1.0	Used motor which can be reinstalled in the well.
Motor in well (Ohm readings are for drop cable plus motor)	500,000 - 1,000,000	0.5 - 1.0	A motor in reasonably good condition.
	20,000 - 500,000	0.02 - 0.5	A motor which may have been damaged by lightning or with damaged leads. Do not pull the pump for this reason.
	10,000 - 20,000	0.01 - 0.02	A motor which definitely has been damaged or with damaged cable. The pump should be pulled and repairs made to the cable or the motor replaced. The motor will still operate, but probably not for long.
	Less than 10,000	0 - 0.01	A motor which has failed or with completely destroyed cable insulation. The pump must be pulled and the cable repaired or the motor replaced. The motor will not run in this condition.

6.2 Checking pump performance

The troubleshooting chart on p.15 may require that you test the pump's performance against its curve. To do so, perform these steps:

1. Install pressure gauge
2. Start pump
3. Gradually close the discharge valve
4. Read pressure at shut-off.
5. After taking reading, open valve to its previous position.
6. To calculate pump performance, first convert psi reading to feet.
   (For water: PSI x 2.31 = ____ ft.).
7. Add this to the total vertical distance from the pressure gauge to the water level in the well while the pump is running.
8. Refer to the specific pump curve for the shut-off head for that pump model. If the measured head is close to the curve, pump is probably OK.

6.3 Troubleshooting chart

Problem	Possible cause/how to check	Possible remedy
1. Pump does not run.	a) No power at pump panel. How to check: Check for voltage at panel.	If no voltage at panel, check feeder panel for tripped circuits.
	b) Fuses are blown or circuit breakers are tripped. How to check: Remove fuses and check for continuity with ohmmeter.	Replace blown fuses or reset circuit breaker. If new fuses blow or circuit breaker trips, the electrical installation and motor must be checked.
	c) Motor starter overloads are burnt or have tripped out (three-phase only). How to check: Check for voltage on line or load side of starter.	Replace burnt heaters or reset. Inspect starter for other damage. If heater trips again, check the supply voltage and starter holding coil.
	d) Starter does not energize (three-phase only). How to check: Energize control circuit and check for voltage at the holding coil.	If no voltage, check control circuit. If voltage, check holding coil for shorts. Replace bad coil.
	e) Defective controls. How to check: Check all safety and pressure switches for operation. Inspect contacts in control devices.	Replace worn or defective parts.
	f) Motor and/or cable are defective. How to check: Turn off power. Disconnect motor leads from control box. Measure the lead-tolead resistances with the ohmmeter (Rx1). Measure lead-to-ground values with ohmmeter (Rx100K). Record measured values.	If open motor winding or ground is found, remove pump and recheck values at the surface. Repair or replace motor or cable.
	g) Defective capacitor (single-phase only). How to check: Turn off the power, then discharge capacitor. Check with an ohmmeter (Rx100K). When meter is connected, the needle should jump forward and slowly drift back.	If there is no ohmmeter needle movement, replace the capacitor.

US

Problem	Possible cause/how to check	Possible remedy
2. Pump runs but does not deliver water.	a) Groundwater level in well is too low or well is collapsed. How to check: Check well draw-down. Water level should be at least 3 ft. above pump inlet during operation.	If water level is not at least 3 ft. above pump inlet during operation, then lower the pump if possible, or throttle discharge valve and install water level control.
	b) Integral pump check valve is blocked. How to check: Check the pump's performance against its curve; see section *6.2 Checking pump performance* on page 14.	If the pump is not operating close to the pump curve, remove pump and inspect discharge section. Remove blockage, repair valve and valve seat if necessary. Check for other damage. Rinse out pump and re-install.
	c) Inlet strainer is clogged. How to check: Check the pump's performance against its curve; see section *6.2 Checking pump performance* on page 14.	If pump is not operating close to the pump curve, remove pump and inspect. Clean strainer, inspect integral check valve for blockage, rinse out pump and re-install.
	d) Pump is damaged. How to check: Check the pump's performance against its curve; see section *6.2 Checking pump performance* on page 14.	If pump is damaged, repair as necessary. Rinse out pump and re-install.
3. Pump runs but at reduced capacity.	a) Wrong rotation (three phase only). How to check: Check for proper electrical connection in control panel.	Correct wiring and change leads as required.
	b) Draw-down is larger than anticipated. Check draw-down during pump operation.	Lower the pump if possible. If not, throttle discharge valve and install water level control.
	c) Discharge piping or valve leaking. How to check: Examine system for leaks.	Repair leaks.
	d) Pump strainer or check valve are clogged. How to check: Check the pump's performance against its curve; see section *6.2 Checking pump performance* on page 14.	If not close to the pump curve, remove pump and inspect. Clean strainer, inspect integral check valve for blockage, rinse out pump and re-install.
	e) Pump is worn. How to check: Check the pump's performance against its curve; see section *6.2 Checking pump performance* on page 14.	If not close to pump curve, remove pump and inspect.

Problem	Possible cause/how to check	Possible remedy
4. Pump cycles too much.	a) Pressure switch is not properly adjusted or is defective. How to check: Check pressure setting on switch and operation. Check voltage across closed contacts.	Re-adjust switch or replace if defective.
	b) Level control is not properly set or is defective. How to check: Check setting and operation.	Re-adjust setting (refer to manufacturer data.) Replace if defective.
	c) Insufficient air charging or leaking tank or piping. How to check: Pump air into tank or diaphram chamber. Check diaphram for leak. Check tank and piping for leaks with soap and water solution. Check air to water volume.	Repair or replace damaged component.
	d) Plugged snifter valve or bleed orifice. How to check: Examine valve and orifice for dirt or corrosion.	Clean and/or replace snifter valve or bleed orifice if defective.
	e) Tank is too small. How to check: Check tank size. Tank volume should be approximately 10 gallons for each gpm or pump capacity.	If tank is too small, replace with proper size tank.
5. Fuses blow or circuit breakers trip	a) High or low voltage. How to check: Check voltage at pump panel. If not within ± 10%, check wire size and length of run to pump panel.	If wire size is correct, contact power company. If not, correct and/or replace as necessary.
	b) Three-phase current unbalance. How to check: Check current draw on each lead. Unbalance must be within ± 5%.	If current unbalance is not within ± 5%, contact power company.
	c) Control box wiring and components (single-phase only). How to check: Check that control box parts match the parts list. Check to see that wiring matches wiring diagram. Check for loose or broken wires or terminals.	Correct as required.

US

Problem	Possible cause/how to check	Possible remedy
5. Fuses blow or circuit breakers trip (con't).	d) Defective capacitor (single-phase only). How to check: Turn off power and discharge capacitor. Check using an ohmmeter (Rx100K). When the meter is connected, the needle should jump forward and slowly drift back.	If there is no ohmmeter needle movement, replace the capacitor.
	e) Starting relay (Franklin single-phase motors only). How to check: Check resistance of relay coil with an ohmmeter (Rx1000K). Check contacts for wear.	Replace defective starting relay.

7. Technical data

7.1 Minimum water flow requirements for submersible pump motors

Motor diameter	Casing or sleeve I.D. [inches]	Min. flow past the motor [gpm]
4”	4	1.2
	5	7
	6	13
	7	21
	8	30
6”	6	10
	7	28
	8	45
	10	85
	12	140
	14	198
	16	275
8”	8	10
	10	55
	12	110
	14	180
	16	255
10”	10	30
	12	85
	14	145
	16	220
	18	305

Notes:

- A flow inducer or sleeve must be used if the water enters the well above the motor or if there is unsufficient water flow past the motor.
- The minimum recommended water velocity over 4” motors is 0.25 feet (0.08 m) per second.
- The minimum recommended water velocity over 6", 8", and 10” motors is 0.5 (0.15 m) feet per second.

7.2 Guide for engine-driven generators in submersible pump applications

Motor - 1 or 3 ph [hp]	Generator [kW]	
	Externally regulated	Internally regulated
0.33	1.5	1.2
0.5	2.0	1.5
0.75	3.0	2.0
1	4.0	2.5
1.5	5.0	3.0
2	7.5	4.0
3	10.0	5.0
5.0	15.0	7.5
7.5	20.0	10.0
10.0	30.0	15.0
15.0	40.0	20.0
20.0	60.0	25.0
25.0	75.0	30.0
30.0	100.0	40.0
40.0	100.0	50.0
50.0	150.0	60.0
60.0	175.0	75.0
75.0	250.0	100.0
100.0	300.0	150.0
125.0	375.0	175.0
150.0	450.0	200.0
200.0	600.0	275.0

Notes:

- Table is based on typical 176 °F (80 °C) rise continuous duty generators with 35 % maximum voltage dip during start-up of single-phase and three-phase motors.
- Contact the manufacturer of the generator to assure the unit has adequate capacity to run the submersible motor.
- If the generator rating is in KVA instead of kilowatts, multiply the above ratings by 1.25 to obtain KVA.

US

7.3 Transformer capacity required for three-phase submersible pump motors

3-phase motor [hp]	Minimum total KVA required*	Minimum KVA rating for each transformer	
		2 transformers Open Delta or Wye	3 transformers Delta or Wye
1.5	3	2	1
2	4	2	1.5
3	5	3	2
5	7.5	5	3
7.5	10	7.5	5
10	15	10	5
15	20	15	7.5
20	25	15	10
25	30	20	10
30	40	25	15
40	50	30	20
50	60	35	20
60	75	40	25
75	90	50	30
100	120	65	40
125	150	85	50
150	175	100	60
200	230	130	75

Notes:

- Pump motor KVA requirements only, and does not include allowances for other loads.

7.4 Submersible pump cable selection chart (60 Hz)

The following tables list the recommended copper cable sizes and various cable lengths for submersible pump motors.

These tables comply with the 1978 edition of the National Electric Table 310-16, Column 2 for 167 °F (75 °C) wire. The ampacity (current carrying properties of a conductor) have been divided by 1.25 per the N.E.C., Article 430-22, for motor branch circuits based on motor amps at rated horsepower.

To assure adequate starting torque, the maximum cable lengths are calculated to maintain 95 % of the service entrance voltage at the motor when the motor is running at maximum nameplate amps. Cable sizes larger than specified may always be used and will reduce power usage.

Caution ***The use of cables smaller than the recommended sizes will void the warranty. Smaller cable sizes will cause reduced starting torque and poor motor operation.***

Single-phase motor maximum cable length [ft]
(Motor to service entrance) (2)

Volts	Hp	Max. cable length [ft]	Wire size												
			14	12	10	8	6	4	2	0	00	000	0000	250	300
115	.33		130	210	340	540	840	1300	1960	2910					
	.5		100	160	250	390	620	960	1460	2160					
230	.33		550	880	1390	2190	3400	5250	7960						
	.5		400	650	1020	1610	2510	3880	5880						
	.75		300	480	760	1200	1870	2890	4370	6470					
	1		250	400	630	990	1540	2380	3610	5360	6520				
	1.5		190	310	480	770	1200	1870	2850	4280	5240				
	2		150	250	390	620	970	1530	2360	3620	4480				
	3		120	190	300	470	750	1190	1850	2890	3610				
	5				180	280	450	710	1110	1740	2170				
	7.5					200	310	490	750	1140	1410				
	10						250	390	600	930	1160				

Notes:

1. If aluminum conductor is used, multiply lengths by 0.5. Maximum allowable length of aluminum is considerably shorter than copper wire of same size.
2. The portion of the total cable which is between the service entrance and a 3Ø motor starter should not exceed 25 % of the total maximum length to assure reliable starter operation. Single-phase control boxes may be connected at any point of the total cable length.
3. Cables #14 to #0000 are AWG sizes, and 250 to 300 are MCM sizes.

7.5 Three-phase motor maximum cable length

Caution ***Use of wire size smaller than listed will void warranty.***

US

Three-phase motor maximum cable length [ft]
(Motor to service entrance) (2)

Volts	Hp	Wire size												
		14	**12**	**10**	**8**	**6**	**4**	**2**	**0**	**00**	**000**	**0000**	**250**	**300**
208	1.5	310	500	790	1260									
	2	240	390	610	970	1520								
	3	180	290	470	740	1160	1810							
	5		170	280	440	690	1080	1660						
	7.5			200	310	490	770	1180	1770					
	10				230	370	570	880	1330	1640				
	15					250	390	600	910	1110	1340			
	20						300	460	700	860	1050	1270		
	25							370	570	700	840	1030	1170	
	30							310	470	580	700	850	970	1110
230	1.5	360	580	920	1450									
	2	280	450	700	1110	1740								
	3	210	340	540	860	1340	2080							
	5		200	320	510	800	1240	1900						
	7.5			230	360	570	890	1350	2030					
	10				270	420	660	1010	1520	1870				
	15					290	450	690	1040	1280	1540			
	20						350	530	810	990	1200	1450		
	25						280	430	650	800	970	1170	1340	
	30							350	540	660	800	970	1110	1270
460	1.5	1700												
	2	1300	2070											
	3	1000	1600	2520										
	5	590	950	1500	2360									
	7.5	420	680	1070	1690	2640								
	10	310	500	790	1250	1960	3050							
	15			540	850	1340	2090	3200						
	20			410	650	1030	1610	2470	3730					
	25				530	830	1300	1990	3010	3700				
	30				430	680	1070	1640	2490	3060	3700			
	40						790	1210	1830	2250	2710	3290		
	50						640	980	1480	1810	2190	2650	3010	
	60							830	1250	1540	1850	2240	2540	2890
	75								1030	1260	1520	1850	2100	2400
	100									940	1130	1380	1560	1790
	125											1080	1220	1390
	150												1050	1190
	200												1080	1300
	250													1080

Max. cable length [ft]

			Three-phase motor maximum cable length [ft] (Motor to service entrance) (2)												
	1.5		2620												
	2		2030												
	3		1580	2530											
	5		920	1480	2330										
	7.5		660	1060	1680	2650									
	10	Max. cable length [ft]	490	780	1240	1950									
	15			530	850	1340	2090								
575	20				650	1030	1610	2520							
	25				520	830	1300	2030	3110						
	30					680	1070	1670	2560	3880					
	40						790	1240	1900	2860	3510				
	50							1000	1540	2310	2840	3420			
	60							850	1300	1960	2400	2890	3500		
	75								1060	1600	1970	2380	2890	3290	
	100									1190	1460	1770	2150	2440	2790

Caution ***Use of wire size smaller than listed will void warranty.***

Notes:

- If aluminum conductor is used, multiply lengths by 0.5. Maximum allowable length of aluminum is considerably shorter than copper wire of same size.
- The portion of the total cable which is between the service entrance and a 3Ø motor starter should not exceed 25 % of the total maximum length to assure reliable starter operation. Single-phase control boxes may be connected at any point of the total cable length.
- Cables #14 to #0000 are AWG sizes, and 250 to 300 are MCM sizes.

US

7.6 Electrical data

7.6.1 Grundfos submersible pump motors - 60 Hz

Grundfos submersible pump motors - 60 Hz

Hp	Ph	Volt [V]	S.F.	Circuit breaker or fuses		Amperage		Full load		Max. thrust [lbs]	Name-plate number	Product number
				Std.	Delay	Start [A]	Max. [A]	Eff. [%]	Power factor			
4-inch, single-phase, 2-wire motors (control box not required)												
.5	1	230	1.60	15	7	34.5	6.0	62	76	750	79952102	96465616
.75			1.50	20	9	40.5	8.4	62	75	750	79952103	96465618
1			1.40	25	12	48.4	9.8	63	82	750	79952104	96465620
1.5			1.30	35	15	62.0	13.1	64	85	750	79952105	96465622
4-inch, single-phase, 3-wire motors												
.5	1	230	1.60	15	7	21.5	6.0	62	76	750	79453102	96465606
.75			1.50	20	9	31.4	8.4	62	75	750	79453103	96465608
1			1.40	25	12	37.0	9.8	63	82	750	79453104	9646510
1.5			1.30	35	15	45.9	11.6	69	89	750	79453105	96465612
4-inch, three-phase, 3-wire motors												
1.5	3	230	1.30	15	8	40.3	7.3	75	72	750	79302005	96465629
		460	1.30	10	4	20.1	3.7	75	72	750	79362005	96465651
		575	1.30	10	4	16.1	2.9	75	72	750	79392005	96465630
2	3	230	1.25	20	10	48	8.7	76	75	750	79302006	96465652
		460	1.25	10	5	24	4.4	76	75	750	79362006	791539066
		575	1.25	10	4	19.2	3.5	76	75	750	79392006	791539066
3	3	230	1.15	30	15	56	12.2	77	75	1000	79304507	96405801
		460	1.15	15	7	28	6.1	77	75	1000	79354507	96405810
		575	1.15	15	6	22	4.8	77	75	1000	79394507	96405815
5	3	230	1.15	40	25	108	19.8	80	82	1000	79304509	96405802
		460	1.15	20	12	54	9.9	80	82	1000	79354509	96405811
		575	1.15	15	9	54	7.9	80	82	1000	79394509	96405816
7.5	3	230	1.15	60	30	130	25.0	81	82	1000	79305511	96405805
		460	1.15	35	15	67	13.2	81	82	1000	79355511	96405814
		575	1.15	30	15	67	10.6	81	82	1000	79395511	96405819
6-inch, three-phase, 3-wire motors												
7.5	3	230	1.15	60	35	119	26.4	80.5	76	1000	78305511	96405781
		460	1.15	30	15	59	13.2	80.5	76	1000	78355511	96405794
10	3	230	1.15	80	45	156	34.0	82.5	79	1000	78305512	96405782
		460	1.15	40	20	78	17.0	82.0	79	1000	78355512	96405795
15	3	230	1.15	150	80	343	66.0	84.0	81	4400	78305516	96405784
		460	1.15	60	30	115	24.5	82.5	82	4400	78305514	96405796
20	3	230	1.15	150	80	343	66.0	84	81	4400	78305516	96405784
		460	1.15	80	40	172	33.0	84	82	4400	78355516	96405797
25	3	460	1.15	100	50	217	41.0	84.5	80	4400	78355517	96405798
30	3	460	1.15	110	60	237	46.5	85	83	4400	78355518	96405799
40	3	460	1.15	150	80	320	64.0	85	82	4400	78355520	96405800

7.6.2 Other motor manufacturers

Hitachi motors

Refer to the Hitachi submersible motors application maintenance manual.

7.6.3 Franklin motors

Refer to the Franklin submersible motors application maintenance manual.

7.6.4 Correcting for three-phase power imbalance

Example: Check for current unbalance for a 230 volt, three-phase, 60 Hz submersible pump motor, 18.6 full load amps.

Solution: Steps 1 to 3 measure and record amps on each motor drop lead for Hookups 1, 2 and 3.

Observe that Hookup 3 should be used since it shows the least amount of current unbalance. Therefore, the motor will operate at maximum efficiency and reliability.

By comparing the current values recorded on each leg, you will note the highest value was always on the same leg, L_3. This indicates the unbalance is in the power source. If the high current values were on a different leg each time the leads were changed, the unbalance would be caused by the motor or a poor connection.

If the current is greater than 5 %, contact your power company for help.

*For a detailed explanation of three-phase balance procedures, see section *4.1 Startup with three-phase motors* on p. 11.

	Step 1 (Hookup 1)	Step 2 (Hookup 2)	Step 3 (Hookup 3)
(T_1)	DL_1 = 25.5 amps	DL_3 = 25 amps	DL_2 = 25.0 amps
(T_2)	DL_2 = 23.0 amps	DL_1 = 24 amps	DL_3 = 24.5 amps
(T_3)	DL_3 = 26.5 amps	DL_2 = 26 amps	DL_1 = 25.5 amps
Step 4	Total = 75 amps	Total = 75 amps	Total = 75 amps
Step 5	Average Current =	total current = 3 readings	75 / 3 = 25 amps
Step 6	Greatest amp difference from the average:	(Hookup 1) = 25-23 = 2 (Hookup 2) = 26-25 = 1 (Hookup 3) = 25.5-25 = .5	
Step 7	% Unbalance	(HOOKUP 1) = 2/25 X 100 = 8 (HOOKUP 2) = 1/25 X 100 = 4 (HOOKUP 3) = .5/25 X 100 = 2	

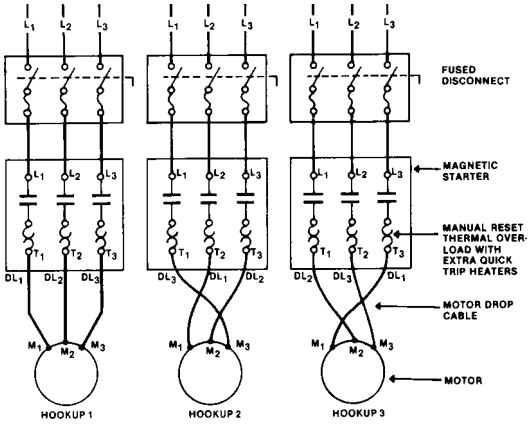

Hookup 1 Hookup 2 Hookup 3

TM05 0042 0611

Fig. 14

Subject to alterations.

US

7.6.5 Total resistance of drop cable (OHMS)

The values shown in this table are for copper conductors. Values are for the total resistance of drop cable from the control box to the motor and back.

To determine the resistance:

1. Disconnect the drop cable leads from the control box or panel.
2. Record the size and length of drop cable.
3. Determine the cable resistance from the table.
4. Add drop cable resistance to motor resistance. Motor resistances can be found in section *7.6 Electrical data* on p. 24.
5. Measure the resistance between each drop cable lead using an ohmmeter. Meter should be set on Rx1 and zero-balanced for this measurement.
6. The measured values should be approximately equal to the calculated values.

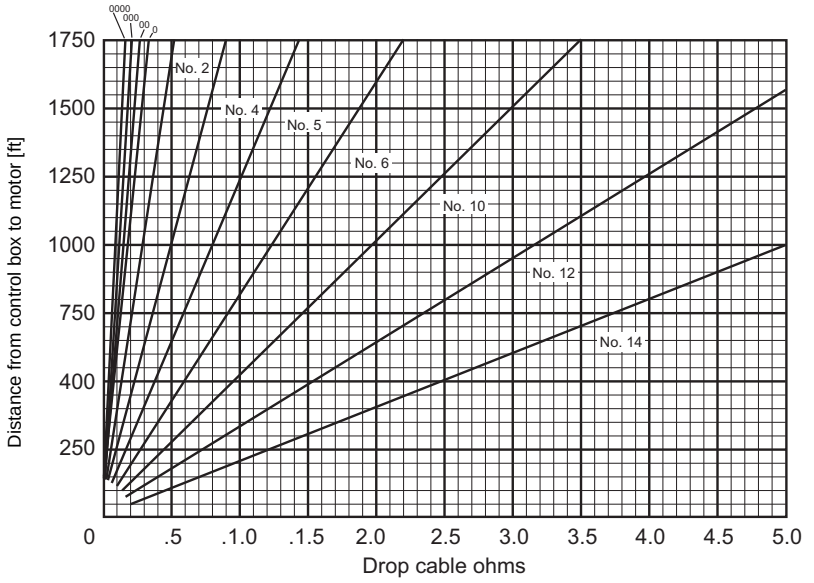

TM05 0043 0611

8. Disposal

This product or parts of it must be disposed of in an environmentally sound way:

1. Use the public or private waste collection service.
2. If this is not possible, contact the nearest Grundfos company or service workshop.

9. Removal and fitting of cable guard

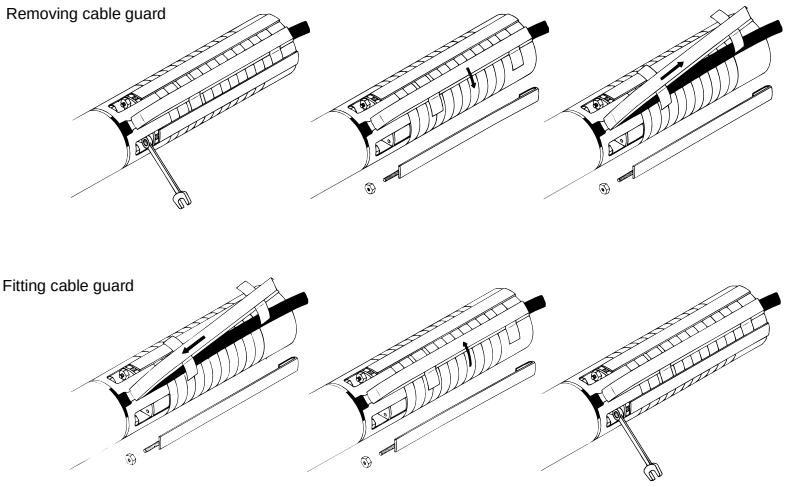

TM00 1325

Fig. 15 Removal and fitting o cable guard for SP 85S, 150S, 230S, and 300S

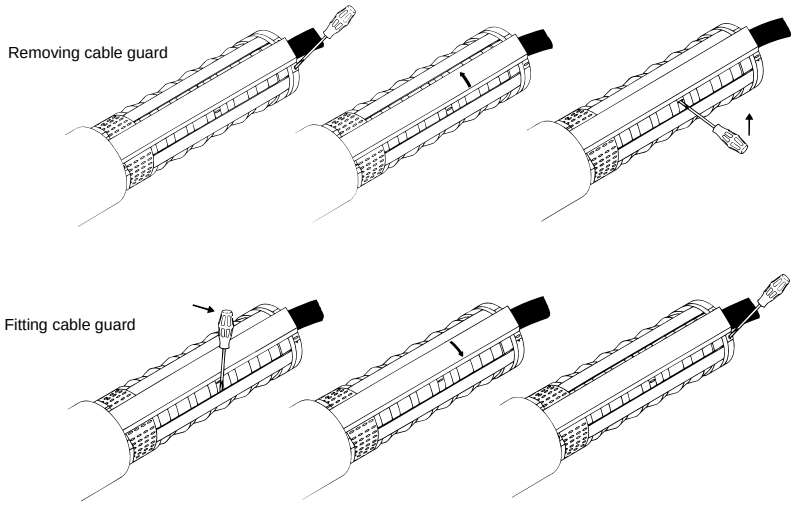

TM00 1326

Fig. 16 Removal and fitting of cable guard for SP 385S, 475S, 625S, 800S, and 1100S

This page intentionally left blank.

U.S.A.

GRUNDFOS Pumps Corporation
17100 West 118th Terrace
Olathe, Kansas 66061
Phone: +1-913-227-3400
Telefax: +1-913-227-3500

Canada

GRUNDFOS Canada Inc.
2941 Brighton Road
Oakville, Ontario
L6H 6C9
Phone: +1-905 829 9533
Telefax: +1-905 829 9512

México

Bombas GRUNDFOS de México
S.A. de C.V.
Boulevard TLC No. 15
Parque Industrial Stiva
Aeropuerto
Apodaca, N.L.C.P. 66600
Phone: +52-81-8144 4000
Telefax: +52-81-8144 4010

This page intentionally left blank.

L-SP-TL-031 05.11	**US**
Repl. 02.00	

© 2000, 2011 Grundfos Pumps Corp.

The name Grundfos, the Grundfos logo, and the payoff Be–Think–Innovate are registrated trademarks owned by Grundfos Management A/S or Grundfos A/S, Denmark. All rights reserved worldwide.

Subject to alterations.

This page intentionally left blank.

CD

The disc, which is inserted in the cover, contains the user manuals of the APEX10, APEX15 and APEX20 hose pumps. The disc also contains a replacement instruction for the pump hose. This replacement instruction is only for users that are familiar with the replacement procedures in the user manual.

System requirements

The program on the disc requires a PC with the following minimum system requirements:

- CD drive

The following software must be installed on the PC:

- PDF reader program
- an internet browser
- a mediaplayer that can play .avi files

How to use the disc

1 Put the disc in the disc drive.
2 Close the disc drive.
The disc will start automatically.
3 Wait until the various pump manuals appear on screen.
4 Select the required pump manual (click 1x with the left mouse button).
The PDF reader program will automatically start and the required user manual appears on screen.

Shortcuts

In the left margin you will find the various chapters and paragraphs. These can be accessed directly by clicking on the required chapter or paragraph.
In the text you will find hyperlinks to chapters or paragraphs. These hyperlinks are linked with the required chapters or paragraphs. By clicking a shortcut the required chapter or paragraph appears on screen.

Hose pump series
APEX10, APEX15 and APEX20

Manual

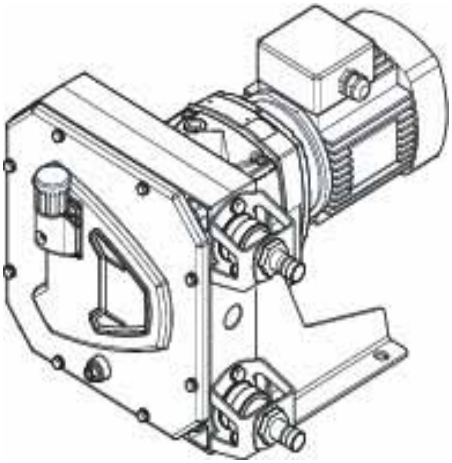

NEN-EN-ISO
9001:2000

© 2012 Watson-Marlow Bredel B.V.

All rights reserved.
The information provided herein may not be reproduced and/or published in any form, by print, photoprint, microfilm or any other means whatsoever (electronically or mechanically) without the prior written authorisation of Watson-Marlow Bredel B.V.

The information provided can be changed without prior notification. Watson-Marlow Bredel B.V. or one of its representatives cannot be held liable for possible damage resulting from use of this manual. This is an extensive limitation of the liability which applies to all damage, inclusive of (without limitation) compensating, direct, indirect or consequential damage, loss of data, income or profit, loss or damage to possessions and claims of third parties.

Watson-Marlow Bredel B.V. provides the information in this manual "as is" and does not take any responsibility and does not give any guarantee on this manual or its content. Watson-Marlow Bredel B.V. rejects all responsibilities and guarantees. Furthermore, Watson-Marlow Bredel B.V. does not take responsibility for and does not guarantee that the information in this manual is accurate, complete or up to date.

Names, trade names, brands, etc. used by Watson-Marlow Bredel B.V. may not, as per the legislation concerning the protection of trade names, be considered as available.

CONTENTS

1 GENERAL

1.1 How to use this manual 8
1.2 Original instructions 8
1.3 Other supplied documentation 8
1.4 Service and support 8
1.5 Environment and disposal of waste 9

2 SAFETY

2.1 Symbols 10
2.2 Intended use 10
2.3 Responsibility 11
2.4 Qualification of the user 11
2.5 Regulations and instructions 12

3 WARRANTIES

4 DESCRIPTION

4.1 Identification of the product 14
4.1.1 Identification of the product 14
4.1.2 Identification of the pump 14
4.1.3 Identification of the gearbox 14
4.1.4 Identification of the electric motor 15
4.1.5 Identification of the frequency controller 15
4.1.6 Identification of the pump hose 15
4.2 Construction of the pump 16
4.3 Operation of the pump 17
4.4 Pump hose 18
4.4.1 General 18
4.4.2 Hose compression force adjustment 19
4.4.3 Lubrication and cooling 19
4.5 Gearbox 19
4.6 Electric motor 20
4.7 Available options 20

5 INSTALLATION

5.1 Unpacking 21
5.2 Inspection 21
5.3 Installation conditions 21
5.3.1 Ambient conditions 21
5.3.2 Set-up 21
5.3.3 Pipework 22
5.3.4 Motor 23
5.3.5 Frequency controller 23
5.4 Lifting and moving the pump 24
5.5 Placing the pump 24

6 COMMISSIONING

6.1 Preparations 25
6.2 Commissioning 26

7 OPERATION

7.1 Temperature 27
7.2 Power rating 27
7.3 Dry running 29
7.4 Hose failure 30
7.5 Fluid leakage 31

8 MAINTENANCE

8.1 General 33
8.2 Maintenance and periodic inspections 34
8.3 Cleaning pump hose 35
8.4 Changing lubricant 35
8.5 Replacing pump hose 36
8.5.1 Removing the pump hose 36
8.5.2 Cleaning the pump head 38
8.5.3 Fitting the pump hose 38
8.6 Exchanging replacement parts 40
8.6.1 Replacing rotor, bearings and seal ring 40
8.7 Fitting options 44
8.7.1 Fitting a high-level float switch 44
8.7.2 Replacing the revolution counter 45

9 STORAGE
9.1 Hose pump 48
9.2 Pump hose 48

10 TROUBLESHOOTING

11 SPECIFICATIONS
11.1 Pump head 54
11.1.1 Performance 54
11.1.2 Materials 55
11.1.3 Surface treatment 55
11.1.4 Lubricant table pump 56
11.1.5 Weights 56
11.1.6 Torque figures 57
11.2 Gearbox 58
11.3 Electric motor 58
11.4 Variable Frequency Drive (VFD) (optional) 59
11.5 Parts list 60
11.5.1 Ordering parts 60
11.5.2 Overview 60
11.5.3 Cover assembly 61
11.5.4 Pump head assembly 62
11.5.5 Support assembly 63
11.5.6 Barbed nipple assembly (PTFE/PDVF) 64
11.5.7 Hose or threaded nipple assembly (AISI 316/PP/PVC) 65
11.5.8 Flange assembly with insert 66
11.5.9 Flange assembly with threaded nipple 67
11.5.10Lubricants 67

SAFETY FORM

NOTES

1 GENERAL

1.1 How to use this manual

This manual is intended as a reference book by means of which qualified users are able to install, commission and maintain the hose pumps mentioned on the front cover.

1.2 Original instructions

The original instructions for this manual have been written in English. Other language versions of this manual are a translation of the original instructions.

1.3 Other supplied documentation

Documentation of components such as the gearbox, the motor and the frequency controller is not included in this manual. However, if additional documentation is supplied, you must follow the instructions in this additional documentation.

1.4 Service and support

For information with respect to specific adjustments, installation, maintenance or repair jobs which fall beyond the scope of this manual, contact your distributor. Make sure you have the following data at hand:

- Serial number of the hose pump
- Article number of the pump hose
- Article number of the gearbox
- Article number of the electric motor
- Article number of the frequency controller

You will find these data on the identification plates or stickers on the pumphead, the pump hose, the gearbox and the electric motor. Refer to § 4.1.1.

1.5 Environment and disposal of waste

	**CAUTION** Always observe the local rules and regulations with respect to processing (non reusable) parts of the hose pump.

Enquire within your local government about the possibilities for reuse or environment friendly processing of packaging materials, (contaminated) lubricant and oil.

2 SAFETY

2.1 Symbols

In this manual the following symbols are used:

	**WARNING** Procedures which, if not carried out with the necessary care, may result in serious bodily harm.

	**CAUTION** Procedures which, if not carried out with the necessary care, may result in serious damage to the hose pump, the surrounding area or the environment.

	Remarks, suggestions and advice.

2.2 Intended use

The hose pump is exclusively designed for pumping suitable products. Every other or further use is not in conformance with the intended use.
Flammable fluids are not suitable products to be pumped by this hose pump. This pump is not intended to operate in potentially explosive atmospheres.
The "Intended use" as laid down in EN 292-1 is "... the use for which the technical product is intended in accordance with the specifications of the manufacturer, inclusive of his indications in the sales brochure". In case of doubt it is the use, which appears to be its intended use judging from the construction, execution and function of the product, and its description in the user's documentation.
Only use the pump in conformance with the intended use described above. The manufacturer cannot be held responsible for damage or harm resulting from use that

is not in conformance with the intended use. If you want to change the application of your hose pump, contact your distributor first.

2.3 Responsibility

The manufacturer does not accept any responsibility for damage or harm caused by not observing the safety regulations and instructions in this manual and other supplied documentation, or by negligence during installation, use, maintenance and repair of the hose pumps mentioned on the front cover. Depending on the specific working conditions or accessories used, additional safety instructions can be required.
Immediately contact your distributor if you notice a potential danger while using your hose pump.

	**WARNING** The user of the hose pump is fully responsible for observing local safety regulations and directives. Observe these safety regulations and directives when using the hose pump.

2.4 Qualification of the user

The installation, use and maintenance of the hose pump should only be performed by well-trained and qualified users. Temporary staff and persons in training may use the hose pump only under the supervision and responsibility of trained and qualified users.

2.5 Regulations and instructions

- Everyone who works with the hose pump must be aware of the contents of this manual and observe the instructions with great care.
- Never change the order of the actions to be carried out.
- Always store the manual near the hose pump.

3 WARRANTIES

The manufacturer offers a two-year warranty on proper workmanship of all parts of the hose pump. Exclusion is made for normal wear and tear of consumables such as pump hoses, lubricant, hose clamps, pressing shoes, ball bearings, wear rings, and seals, or parts which have been misused or damaged through negligence.

This manufacturer's warranty is null and void for any user who has substituted the parts of an alternate manufacturer into a Watson-Marlow Bredel (hereafter called Bredel) hose pump.

Damaged parts may be returned to the manufacturer for warranty analysis. If failure was determined caused by faulty workmanship, the manufacturer will repair or replace the faulty component.
The parts must be accompanied by a fully completed and signed health and safety form, as present in the back of this manual. The form must be applied to the outside of the shipping carton.
Parts which have been contaminated or which have been corroded by chemicals or other substances that can pose a health risk must be cleaned before they are returned to the manufacturer. Furthermore, it should be indicated on the health and safety form, which specific cleaning procedure has been followed, and it should be indicated that the equipment has been decontaminated. The safety form is required at all items, even if the parts have not been used.

Warranties purporting to be on behalf of Bredel B.V. made by any person, including representatives of Bredel B.V., its subsidiaries, or its distributors, which do not accord with the terms of this warranty shall not be binding upon Bredel B.V. unless expressly approved in writing by a Director or Manager of Bredel B.V.

4 DESCRIPTION

4.1 Identification of the product

4.1.1 Identification of the product

The hose pump can be identified by identification plates or stickers on:

A: Pumphead
B: Gearbox
C: Electric motor
D: Pump hose
E: Frequency controller (option)

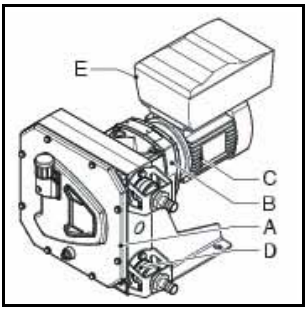

4.1.2 Identification of the pump

The identification plate on the pumphead contains the following data:

A: Pump type
B: Serial number
C: Year of manufacture

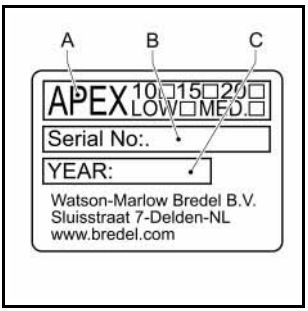

4.1.3 Identification of the gearbox

The identification plate on the gearbox contains the following data:

A: Article number
B: Serial number
C: Type number
D: Reduction ratio
E: Number of revolutions per minute

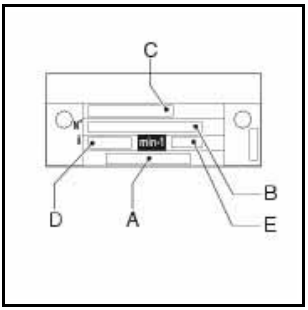

4.1.4 Identification of the electric motor

The identification plate on the electric motor contains the following data:

B: Serial number
C: Article number
D: Mains
E: Frequency
F: Speed
G: Power
H: Power factor
I: Current

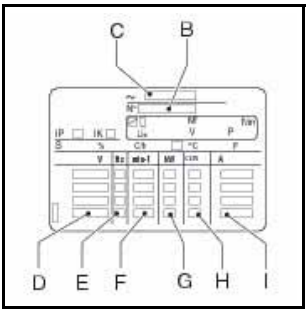

4.1.5 Identification of the frequency controller

The identification plate on the Bredel Variable Frequency Drive (VFD) contains the following data:

A: Article number

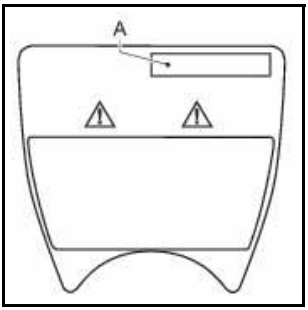

4.1.6 Identification of the pump hose

The identification sticker on the pump hose contains the following data:

A: Article number
B: Internal diameter
C: Material of inner liner
D: Maximum permissible working pressure
E: Production code

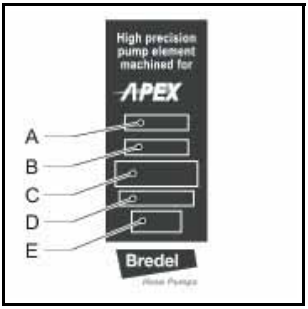

4.2 Construction of the pump

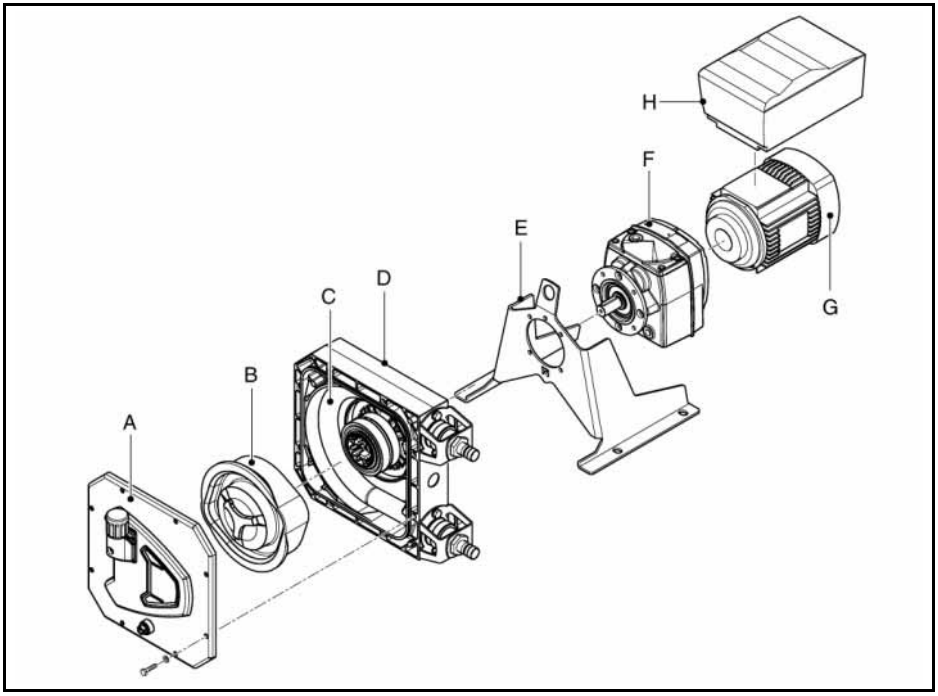

A: Cover
B: Rotor
C: Pump hose
D: Pump housing
E: Support
F: Gearbox
G: Electric motor
H: Frequency controller

4.3 Operation of the pump

The heart of the pumphead consists of a specially constructed pump hose (A) which lies against the inside of the pump housing (B). The ends of the hose are connected to the suction and discharge lines (C). A

bearing-mounted rotor (D) with two facing integral pressing shoes (E) is in the centre of the pumphead. It rotates clockwise.

In phase 1 the lower shoe compresses the pump hose by the rotational movement of the rotor, forcing fluid through the hose. As soon as the shoe has passed, the hose recovers to its original shape due to the mechanical properties of the material and fluid is drawn into the hose.

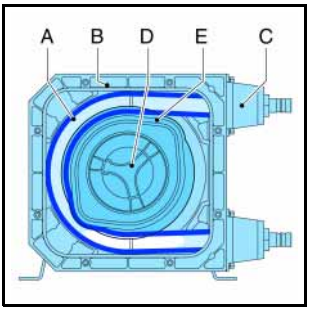

In phase 2 fluid is drawn through the hose by the (continuous) turning motion of the rotor.

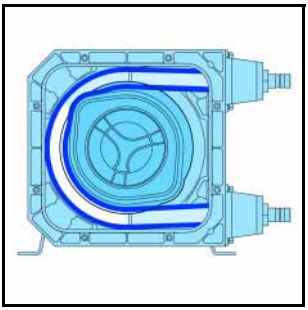

In phase 3, the second integral pressing shoe compresses the pump hose. Due to the continuous rotating movement of the rotor new fluid is sucked in and fluid that is previously drawn in is pressed out by the shoe. When the first shoe leaves the pump hose, the second shoe has already occluded the pump hose and fluid is prevented from flowing back. This method of liquid displacement is known as the "positive displacement principle".

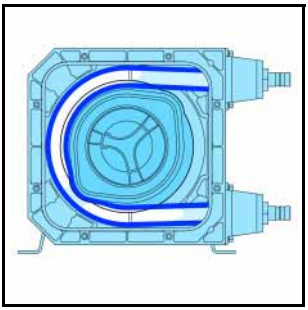

4.4 Pump hose

4.4.1 General

A: Extruded outer layer made of natural rubber
B: Two nylon reinforcement layers
C: Extruded inner liner

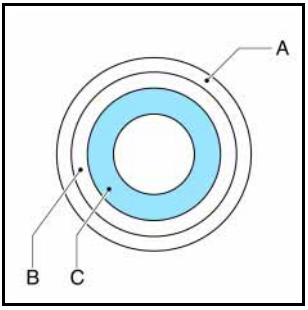

The pump hose liner material should be chemically resistant to the product being pumped. For each pump model various hose types are available. Choose the most appropriate for your application.
The material of the inner liner of the pump hose determines the hose type. Each hose type is marked by a unique colour code.

Hose type	Material	Colour code
NR	Natural rubber	Purple
NBR	Perbunan	Yellow
EPDM	EPDM	Red
CSM	CSM	Blue

	Consult your distributor for more detailed information about the chemical and temperature resistance of pump hoses.

Bredel pump hoses have been carefully machined to achieve minimum tolerances in wall thickness. It is very important to guarantee the correct compression of the pump hose, because:

- When the compression is too high, it creates an excessive load on the pump and pump hose, which may reduce the life of the pump hose and bearings.
- When the compression is too low, it cuts capacity and causes backflow. Backflow reduces the life of the pump hose.

4.4.2 Hose compression force adjustment

The compression force on the pump hose can be adjusted by installing a rotor with a different dimension between the tips of the integral pressing shoes. The rotor is chosen to achieve an optimal life of the pump hose for the intended use of the hose pump. Each hose size (10, 15 or 20 mm inner diameter) has its own low-pressure and medium-pressure rotors. This means there are six types of rotors available. If you want to change the application of your hose pump or if you want to change the hose size, contact your distributor.

4.4.3 Lubrication and cooling

The pumphead, in which the rotor and pump hose can be found, is filled with Bredel Genuine Hose Lubricant. This lubricant lubricates the movement between the hose and the pressing shoes and dissipates the generated heat via the pump housing and the cover.

The lubricant is food grade. Refer to § 11.1.4 for the required quantity and NSF registration.

	Consult your distributor for lubrication recommendations when operating the hose pump below 2 rpm.

4.5 Gearbox

The hose pump types described in this manual use helical gearbox units. The gearboxes are fitted with a flange connection. Refer to § 11.2 for specifications. Refer to the documentation supplied with the gearbox for installation and maintenance information. In case of doubt, consult your distributor.

4.6 Electric motor

The standard electric motor is a completely enclosed three-phase asynchronous motor. The motor connection must meet the local applicable regulations.

Refer to the documentation supplied with the electric motor for installation and maintenance information. In case of doubt consult your distributor. Refer to § 5.3.4 and § 11.3 for installation and connection information.

4.7 Available options

The following options are available for the hose pump:

- High (lubricant) level float switch
- Revolution counter
- Medium- or low-pressure rotor
- Frequency controller[1]
- Three hose sizes
- Various nipples and flanges

1 Refer to the supplier's documentation and § 11.4.

5 INSTALLATION

5.1 Unpacking

Follow the unpacking instructions on the packaging or on the hose pump, the gearbox and the electric motor.

5.2 Inspection

Check that your delivery is correct and check it for any transport damage. When replacing parts, check that the delivery is correct and check these parts for any transport damage. Refer to § 4.1.1. Report any damage immediately to your distributor.

5.3 Installation conditions

5.3.1 Ambient conditions

Make sure that the hose pump is in an area where the ambient temperature during operation is not lower than -20 °C (-4 °F) and not higher than +45 °C (+113 °F).

5.3.2 Set-up

- The pump materials and protective layers are suitable for indoor set-up and a protected outdoor set-up. Under certain conditions the pump is suitable for limited outdoor set-up or a salty or aggressive atmosphere. Consult your distributor for more information.
- Make sure that the floor surface has a maximum slope of 1 mm per meter (0.012 in per foot).
- Make sure that there is sufficient room around the pump to carry out the necessary maintenance.
- Make sure that the room is sufficiently ventilated, so that the heat developed by the pump and drive can be dissipated. Keep some

distance between the ventilation cover of the electric motor and the wall to allow the supply of cooling air.

5.3.3 Pipework

When determining and connecting suction and discharge lines consider the following points:

- The bore size of the suction and discharge lines must be larger than the bore size of the pump hose. For more information consult your distributor.
- Limit the presence of sharp bends in the discharge line. Make sure that the radius of any bend is as large as possible. Use Y-connections instead of T-connections.
- It is recommended to use a minimum of three quarters (3/4) of the hose length as flexible hose in the suction or discharge line. This avoids the need to remove the connection lines when changing a pump hose.
- Keep the delivery and suction lines as short and direct as possible.
- Select the correct mounting material for flexible hoses and make sure that the installation is suited for the design pressure of the system.
- Do not exceed the maximum working pressure of the hose pump. Refer to § 11.1.1. If necessary fit a pressure relief valve.

	**CAUTION** Consider the maximum permissible working pressure on the discharge side. Exceeding the maximum working pressure may lead to serious damage to the pump.

- Make sure that the maximum forces on the flanges are not exceeded. The permissible loads are given in the following table.

Maximum permissible loads [N / lbf] on the pump connections		
Force	**[N]**	**[lbf]**
F1	600	135
F2	120	27
F3	300	67

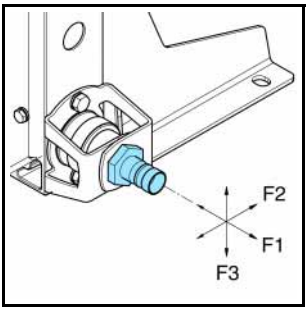

5.3.4 Motor

The motor connection must meet the local applicable regulations. A thermal safety device should reduce the risk of a motor overload. For connecting PTC thermistors (if present) a special thermistor relay must be used. In case of doubt, contact your distributor for advice. Refer to § 11.3 for specifications.
Refer to the documentation supplied with the electric motor for information on how to connect the motor to your power supply.

5.3.5 Frequency controller

⚠	**WARNING** A frequency controller that is fitted *without manual control* can start the pump automatically when power is applied.

If the hose pump is fitted with a frequency controller, consider the following points:

- Take precautions so the motor does not re-start automatically after an unscheduled stop.
  In the event of a power or mechanical failure, the frequency controller stops the motor. When the cause of the failure is removed, the motor can restart automatically. The automatic restart can be dangerous in certain pump installations.

- All control cables outside the enclosure must be shielded and have a cross sectional area between 0.22 and 1 mm^2 (23 and 18 AWG). The shielding must be connected to earth at both ends. In case of doubt, consult your distributor.

5.4 Lifting and moving the pump

The pump support has a lifting eye (A) for lifting and moving the hose pump.

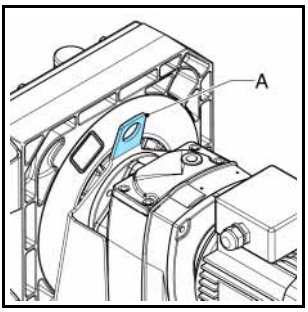

The complete hose pump, i.e. pumphead, gearbox and electric motor, must be lifted using the lifting eye plus additional support using suitably rated straps or slings (A). For the weights, refer to § 11.1.5.

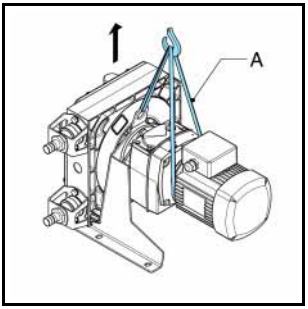

⚠	**WARNING** If the pump is to be lifted ensure that all standard lifting practices are adhered to and carried out by qualified personnel only.

5.5 Placing the pump

Position the pump on a horizontal surface. Use suitable anchor bolts to attach the pump to the floor surface.

6 COMMISSIONING

6.1 Preparations

	**WARNING** A frequency controller that is fitted *without manual control* can start the pump automatically when power is applied.

	**WARNING** Disconnect and lock the power supply to the pump drive before any work is carried out. Wait two minutes to make sure that the capacitors have discharged. This is necessary when the motor is fitted with a frequency controller and has single phase power supply.

1. Connect the electric motor and, if present, the frequency controller in conformance with the locally applicable rules and regulations. Refer to § 5.3.5. Have the electrical installation work carried out by qualified personnel.

2. Check that the lubricant level is above the minimum level line in the inspection window. If necessary refill with Bredel Genuine Hose Lubricant via the breather plug. See also § 8.4.

6.2 Commissioning

1. Connect the pipework.

2. Make sure that there are no obstructions such as closed valves.

3. Switch on the hose pump.

4. Check the rotation of the rotor.

5. Check the capacity of the hose pump. If the capacity differs from your specification, follow the instructions in chapter 10 or consult your distributor.

6. If a frequency controller is present, check the capacity range. In case of any deviations consult the supplier's documentation.

7. Check the hose pump in accordance with points 2 to 4 of the maintenance table at § 8.2.

7 OPERATION

7.1 Temperature

The pump will heat up during normal operation. Heat is generated in the contact zone between the pressing shoe and the hose. The heat is removed by the lubricant and transported to the pump casing and cover. This will result in a temperature higher than the ambient temperature.

	**WARNING** Avoid contact with the casing and cover under conditions of high pressure and running speed.

7.2 Power rating

The pump requires a certain amount of power for the specified operating condition(s). The gearbox and motor should be capable of handling that power at the given revolution speeds.

	**WARNING** Overloading the motor can lead to serious motor damage. Do not exceed the maximum power rating of the motor.

	**WARNING** Overloading the gearbox leads to increased tooth wear and shortened bearing life. This can lead to serious gearbox damage. Do not exceed the maximum power rating of the gearbox.

7.2.1 Performance graph APEX10:

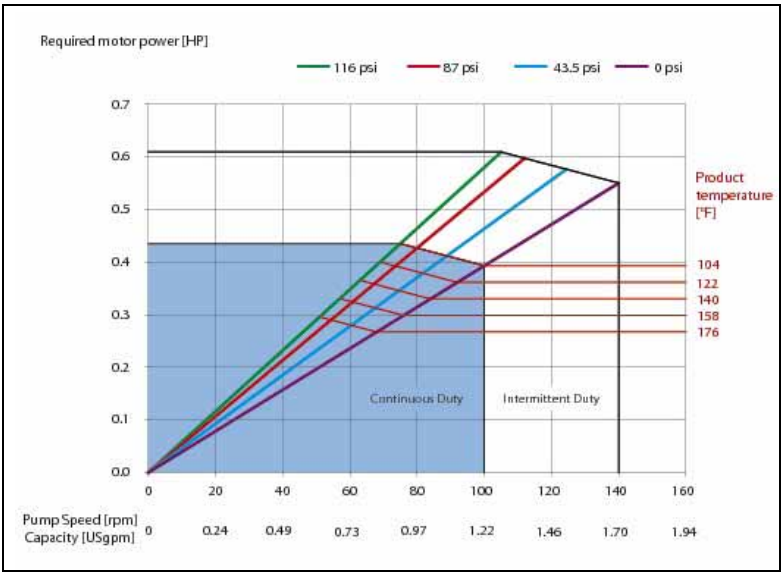

7.2.2 Performance graph APEX15:

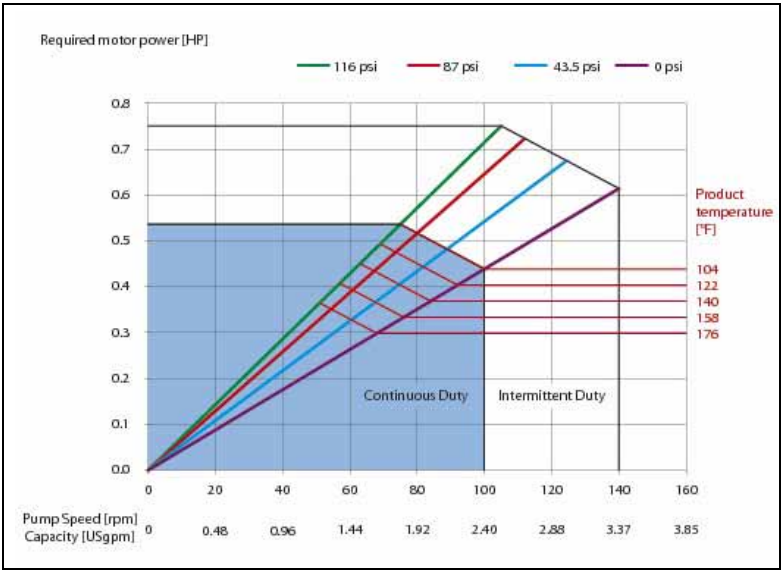

7.2.3 Performance graph APEX20:

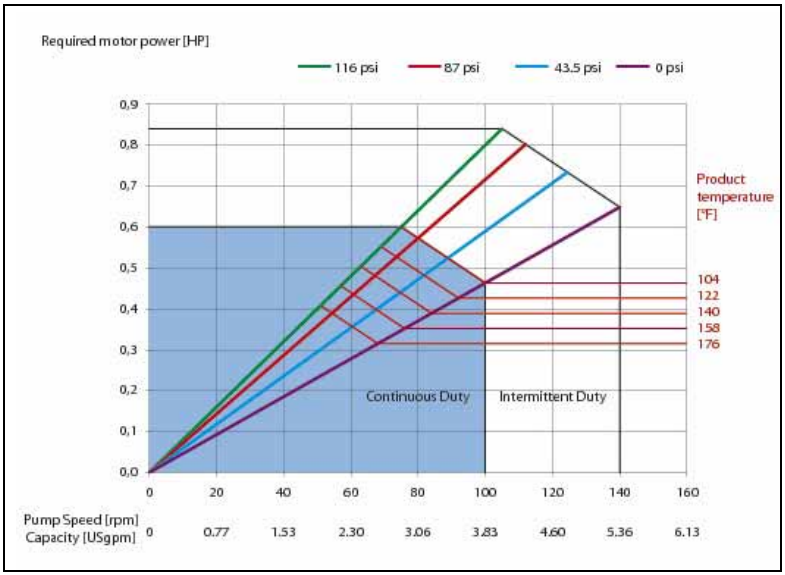

7.3 Dry running

Dry running is a running condition of the pump when no fluid is flowing through the pump. Bredel peristaltic pumps are very suitable for dry running.
Dry running imposes an additional thermal load on the pump hose, because the internal heat associated with repetitive hose compression is normally removed by the process fluid. So dry running increases the wear on the hose. The thermal load depends on the running speed of the pump, the hose size (10, 15, 20 mm) as well as the rotor type (low-pressure or medium-pressure). To minimize the extra wear, it is advisable to minimize dry running periods.

7.4 Hose failure

Cause of a hose failure
The hose in a peristaltic pump has to withstand many load cycles of considerable magnitude. The repetitive stress cycles will cause the hose to deteriorate and eventually fail.

Result of a hose failure
A hose failure will result in direct contact between the pump lubricant and the pumped fluid.

Consequences of a hose failure
In general, this will not cause a hazardous situation because the Bredel Genuine Hose Lubricant is harmless (approved by the United States Food and Drug Administration). However, there is an exception in case of pumping a strong oxidizer or a strong acid.

- Hazardous situations

	**WARNING** Avoid direct contact between a strong oxidizer or a strong acid and Bredel Genuine Hose Lubricant. This can cause unwanted chemical reactions. Use an alternative lubricant to avoid hazardous situations. Contact your distributor for more details.

- Additional downtime
  Hose failure will result in additional downtime, because you must clean the pump before a new hose installation.

	Regularly replace the hose to avoid hose failure and additional downtime. Hose life depends on the operating condition, process fluid and hose material. The end-user should be aware of this and establish the frequency of preventive hose replacement. Contact your distributor for advice.

- Large spill of product
  In case the pressure in the process line (reservoir) is above the pressure in the pump housing (ambient pressure), the process fluid can enter the pump housing. If there is no check valve in the process line a serious amount of fluid can flow from the reservoir into the pump housing and escape through the breather onto the floor. This could lead to a large spill of product outside the pump. Reversed flow protection is advised. This is not part of the scope of delivery.

7.5 Fluid leakage

The APEX pump uses a lubricated rotor to compress the hose. This means the pumphead must be filled with sufficient lubricant during operation. This lubricant is contained in the pump housing by the front cover and by a dynamic seal on the back. The gearbox is filled with gearbox lubricant.

Seal damage can occur due to normal wear in time, but is seriously accelerated if the seal gets in contact with contaminated lubricant. Thorough cleaning of the pump housing after a hose failure and regular replacement of the lubricant is strongly advised.

The pumphead and gearbox are directly coupled to each other. A special feature is included in the pumphead to allow early detection of seal damage of the pump or gearbox.

This feature is called the leakage zone. Drops of lubricant visible at the back of the pump indicate likely seal failure. To avoid consequential damage, the pump

must be stopped and lubricant levels of the pumphead and gearbox must be checked. The damaged seal should be replaced.

	Regularly inspect the pump for fluid leakage.

	**WARNING** Risk of injury from falling! Process fluid mixed with pump lubricant that is leaking from the pump can make floors slippery.

8 MAINTENANCE

8.1 General

	**WARNING** Disconnect and lock the power supply to the pump drive before any work is carried out. Wait two minutes to make sure that the capacitors have discharged. This is necessary when the motor is fitted with a frequency controller and has single-phase power supply.

	**WARNING** Do not remove the pump cover if the power cable is connected to the motor. Do not connect the power cable to the motor if the pump cover is removed.

Only use original Bredel parts when maintaining the hose pump. Bredel cannot guarantee correct operation and any consequential damage that occurs from the use of non-original Bredel components. See also chapters 2 and 3.
Check that your delivery of original parts is correct and check it for any transport damage. If parts are damaged, consult your distributor.

	Before installation, always check the condition of the supplied parts. Do not install damaged parts. In case of doubt, contact your distributor.

8.2 Maintenance and periodic inspections

The following diagram shows the maintenance and periodic inspection that need to be carried out on the hose pump to guarantee optimal safety, operation and life of the pump.

Point	Action	To be carried out	Remark
1	Checking the lubricant level.	Before starting the pump and at scheduled intervals during operation.	Make sure that the lubricant level is above the minimum level line in the inspection window. If necessary refill the lubricant. See also § 8.4.
2	Checking the pump-head for any leakage of lubricant around the cover, the brackets and the rear of the pump-head.	Before starting the pump and at scheduled intervals during operation.	See § 10.
3	Checking the gearbox for any leakage.	Before starting the pump and at scheduled intervals during operation.	In case of leakage consult your distributor.
4	Checking the pump for deviating temperature or strange noises.	At scheduled intervals during operation.	See § 10.
5	Checking the rotor with integral pressing shoes for excessive wear.	When replacing the pump hose.	See § 8.5.
6	Internal cleaning of the pump hose.	Cleaning of the system or fluid change.	See § 8.3.
7	Replacing the pump hose.	Preventive, this means after 75% of the hose life of the first hose.	See § 8.5.

Point	Action	To be carried out	Remark
8	Changing lubricant.	After every second hose change or after 5,000 service hours, whichever comes first, or after hose rupture.	See § 8.4
9	Replacing the seal ring.	If necessary.	See § 8.6.1.
10	Replacing the rotor with integral pressing shoes.	Wear on the running surface of the pump hose and/or seal ring.	
11	Replacing the bearings.	If necessary.	See § 8.6.1.

8.3 Cleaning the pump hose

The inside of the pump hose can be easily cleaned by rinsing the pump with clean water. If a cleaning fluid is added to the water, check if the hose liner material is resistant to it. Also check if the pump hose can resist the cleaning temperature. Special cleaning balls (pigs) are also available. Contact your distributor for more details.

8.4 Changing lubricant

1. Place a tray (A) under the drain plug in the cover of the pump. Remove the drain plug (B). Drain the lubricant from the pump housing into the tray. Replace the drain plug and tighten it firmly.

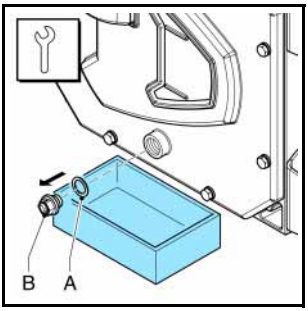

2. The pump housing can be filled with lubricant via the breather (A) on the cover. For this purpose remove the breather cap (B) and position a funnel (C) in the breather. Pour the lubricant into the pump housing through the funnel.

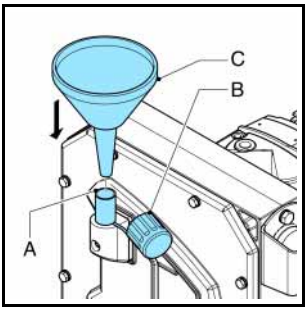

3. Keep on pouring until the lubricant level has risen above the level line in the inspection window. Replace the breather cap.

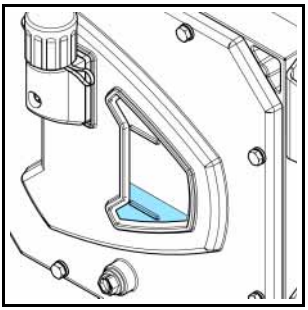

	For the required quantity of lubricant, refer to § 11.1.4.

8.5 Replacing the pump hose

8.5.1 Removing the pump hose

1. Isolate the pump from the electrical supply.

2. Close any shut-off valves in the suction and discharge line to minimize product loss.

3. Place a tray (A) under the drain plug in the bottom of the pumphead. The tray must be large enough to contain the lubricant, possibly contaminated with product fluid, from the pumphead. Remove the drain plug (B). Catch the lubricant from the pump housing in the tray. Check that the breather mounted on the cover is not obscured. Position the drain plug and tighten it firmly.

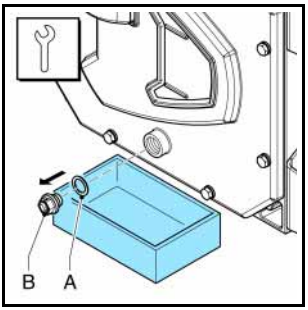

4. Disconnect the suction and discharge lines.

5. Loosen hose clamp (A) of the inlet and outlet ports by loosening bolt (B).

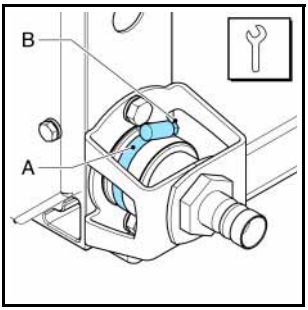

6. Loosen the retaining bolts (A) of the bracket (B) and remove the bolts.

7. Pull the bracket and hose clamp from the hose. Then pull off the rubber bush (C).
Do steps 6 to 7 for both the inlet and outlet ports.

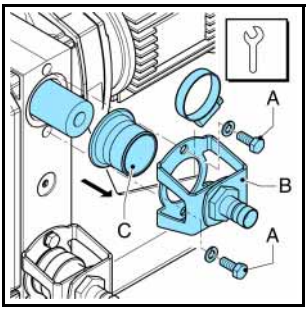

8. Switch on the electrical supply.

9. Drive out the hose (A) from the pump chamber by jogging the drive motor.

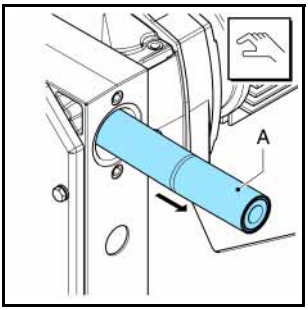

⚠	**WARNING** During jogging the drive: - Do not stand in front of the pump ports. - Do not try to guide the hose by hand.

8.5.2 Cleaning the pumphead

1. Isolate the pump from the electrical supply.

2. Remove the cover (B) by loosening the retaining bolts (A).

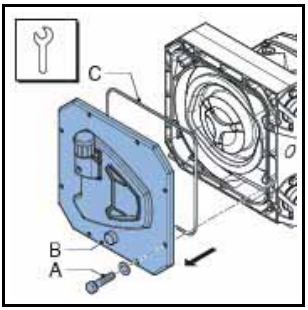

3. Check the cover seal (C) and replace it if necessary.

4. Rinse the pumphead with clean water and remove all residues. Clean the pockets in the pump housing. Make sure that no rinsing water remains in the pumphead.

5. Check the rotor for wear or damage and replace the rotor if necessary. Also see the maintenance diagram in § 8.2.

⚠	**CAUTION** When the rotor is worn the compression force of the hose decreases. If the compression force is too low, this results in a loss of capacity because of the backflow of the liquid to be pumped. Backflow results in a reduction of the life of the pump hose.

6. Replace the cover and fasten the retaining bolts to the correct torque. Refer to § 11.1.6.

7. Switch on the electrical supply to the pump.

8.5.3 Fitting the pump hose

1. Clean the (new) pump hose on the outside and fully lubricate it with Bredel Genuine Hose Lubricant.

2. Fit the pump hose (A) via one of the ports.

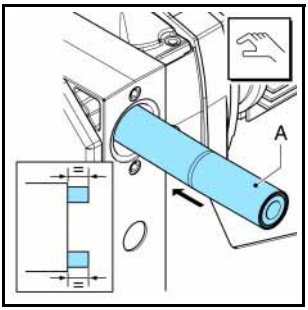

3. Run the motor so that the rotor pulls the hose into the pump housing. Stop the motor when the hose sticks out equally from both sides of the pump housing.

	WARNING During jogging the drive: - Do not stand in front of the pump ports. - Do not try to guide the hose by hand.

4. Check that the rubber bushes (A) are not deformed or damaged and replace them if necessary.

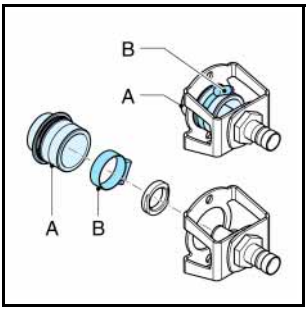

5. Check that the hose clamps (B) are not damaged and replace them if necessary.

6. First fit the inlet port.
Slide the rubber bush (D) over the hose. Push the bracket (A) and the hose clamp (B) over the hose together. Align the holes in the bracket with the ones at the front of the port. Position the two retaining bolts (C) and tighten them. Make sure the bolts are tightened to the correct torque. Refer to § 11.1.6.

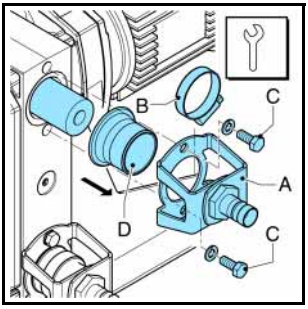

7. Fit the suction line.

8. Turn the rotor in such a way that the hose (A) is pressed firmly against the bracket (B).

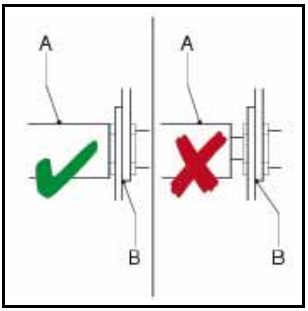

9. Place the hose clamp accurately on the track in the rubber bush. Tighten the bolt (A) of the hose clamp (B). Make sure the bolt is tightened to the correct torque. Refer to § 11.1.6.

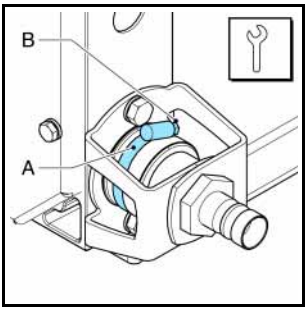

10. Now fit the other port in the same way.

11. Fill the pump housing with Bredel Genuine Hose Lubricant. Refer to § 8.4.

8.6 Exchanging replacement parts

8.6.1 Replacing rotor, bearings and seal ring

1. Remove the pump hose. Refer to § 8.5.1.

2. Isolate the pump from the electrical supply.

3. Remove the cover (B) by loosening the retaining bolts (A).

4. Check the cover seal (C) and replace it if necessary.

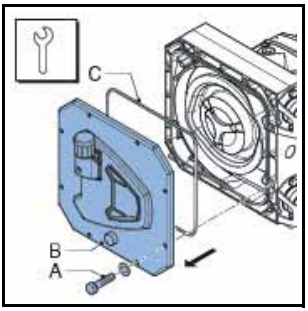

5. Put the hose pump on blocks, on its side as shown. Make sure the space between the blocks is wide enough for the rotor to fall into.

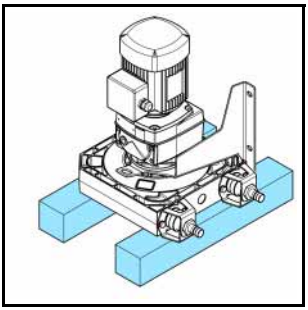

6. Remove the nuts (B), the washers (C) and the pump drive (A).

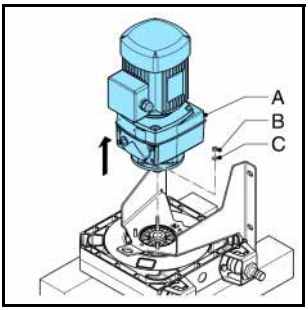

7. Put a plastic or wooden drive pin (A) on the rotor.

8. Hit the drive pin firmly with a hammer to remove the rotor.

9. Put the hose pump upright on the support.

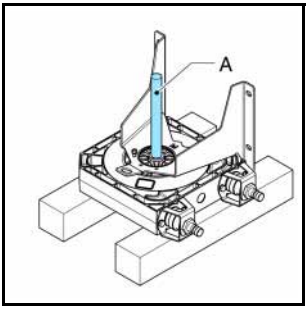

10. Dismount the circlip (A) with the correct tool.

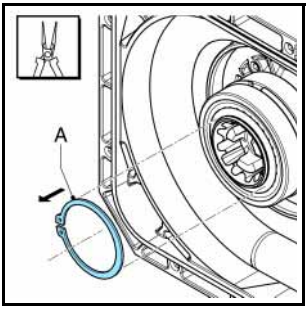

11. Dismount the bearings (A), the spacer ring (B) and the retaining ring (C) with the correct tool. Clean the hub.

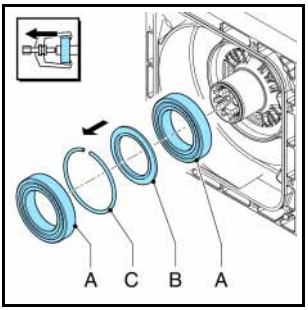

12. Remove the seal ring (A). Clean and degrease the bore.

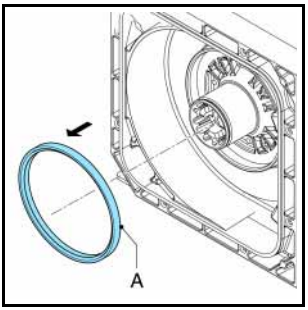

13. Fit a new seal ring (A) using good engineering practices. The seal ring must be fitted in the correct orientation (B). Make sure that the open side points to the pump cover.

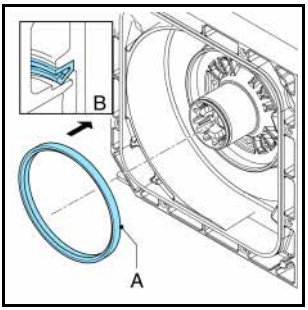

14. Slightly oil the inner ring of the (new) bearings and the seat on the hub. Fit the bearings and the rings.
The bearings are placed on the hub with a slight interference fit. Use a pressing tool to press the bearings on the hub.

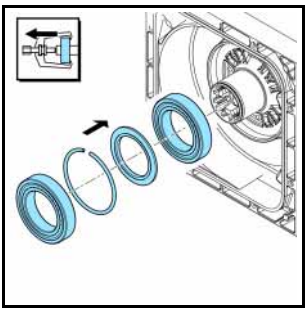

15. Mount the circlip (A).

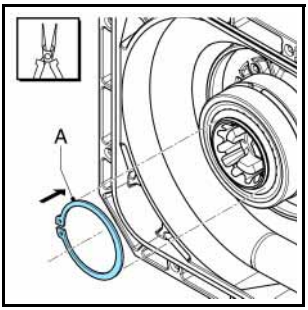

16. Fit the rotor (A). The rotor is placed on the bearings with a loose fit. Press the rotor on the hub until it clicks on the retaining ring.

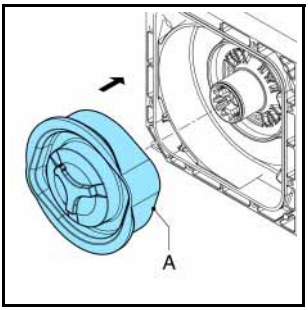

17. Put the hose pump on two blocks, on its side as shown.

18. Fit the pump drive (A) with the nuts (B) and washers (C). Tighten to the specified torque settings. Refer to § 11.1.6.

19. Put the hose pump upright on the support.

20. Check the position of the rotor. If necessary press the rotor on the hub until it clicks on the retaining ring.

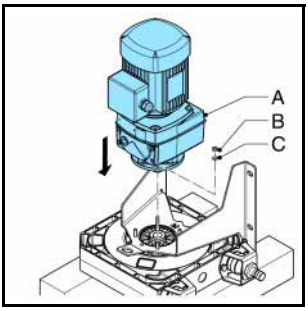

21. Refit the cover (B). Make sure that the eight bolts (A) are refitted and that they are tightened in the correct order, diagonally opposite each other. Refer to § 11.1.6.

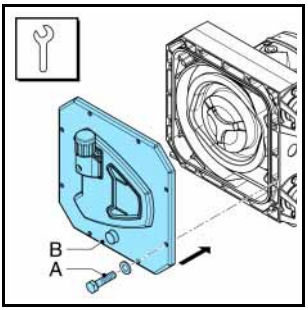

22. Switch on the electrical supply to the pump.

23. Fit the (new) pump hose. Refer to § 8.5.3.

8.7 Fitting options

8.7.1 Fitting a high-level float switch

1. Dismount the standard breather (A) on the cover of the pumphead.

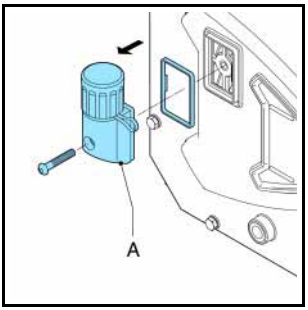

2. Mount the breather (A) with high-level float switch.

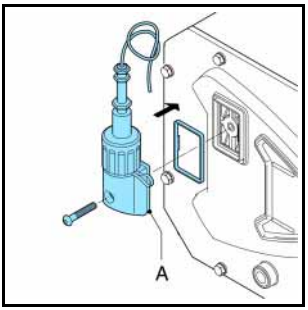

3. Connect the high-level float switch to the auxiliary power circuit via the 1.5 meter (5 feet) long PVC cable (2 x 0.34 mm^2, 2 x 22 AWG). Bear in mind that the electrical contact of the float switch is normally closed (NC). The knob is upwards for normally closed operation. When the lubricant level is (too) high the contact will open.

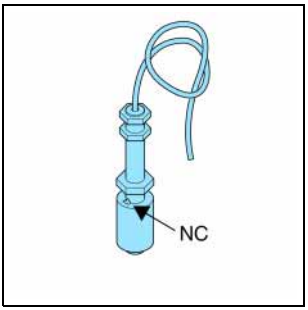

Specifications	
Voltage:	Max. 230 V AC/DC
Current:	Max. 2 A
Power:	Max. 40 VA

	Where the float switch is constructed to stop the equipment, operating has to be arranged so that the stop function locks-out, preventing the equipment from being re-started without re-setting. Check if the float switch is mounted with the NC sign at the top.

8.7.2 Replacing the revolution counter

1. Jog the rotor until the pressing shoe is clearly visible through the inspection window. Now the pressing shoe faces the position of the sensor.

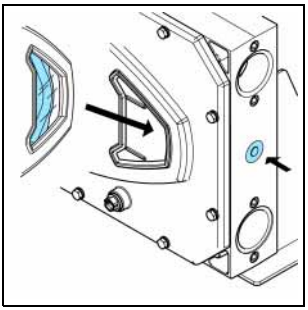

2. Remove the lubricant. Refer to 8.4.

3. Remove the cover (B) by loosening the retaining bolts (A).

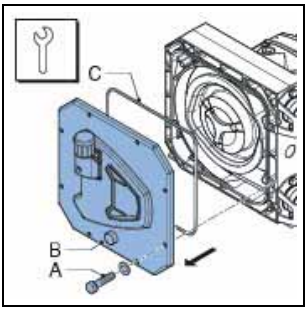

4. Remove the nut (A) and the old sensor (B).

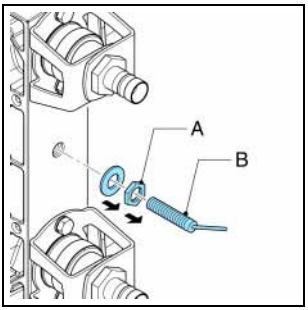

5. Mount the nut (B) and the sealing ring (A) on the new sensor (C).

6. Place the sensor (C) in the pump housing.

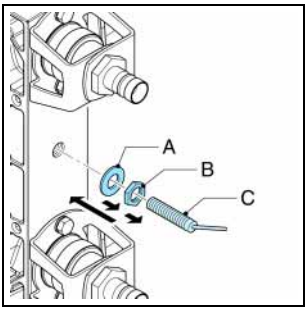

7. Tighten the nuts so that the distance between the sensor and the rotor (X) is between 0.75 mm (0.03 in) and 1.25 mm (0.05 in).

8. Check if the revolution counter works properly:
   1 The sensor needs to send signals.
   2 The rotor should be able to rotate freely.

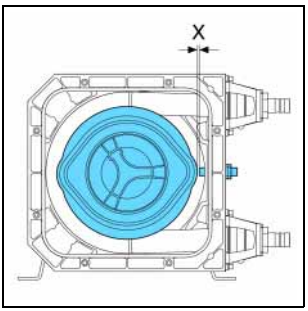

9. Refit the cover (B). Make sure that the eight bolts (A) are refitted and that they are tightened in the correct order, diagonally opposite each other. Refer to § 11.1.6.

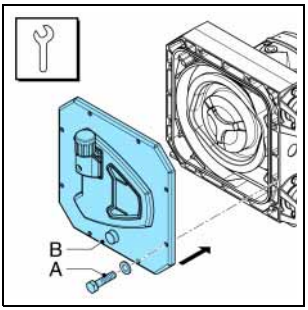

10. Refill the pumping house with lubricant. Refer to 8.4.

11. Connect the sensor electrically via the 2 meter (7 feet) long PVC cable (3 x 0.34 mm^2, 3 x 22 AWG). Refer to the connection scheme, right.

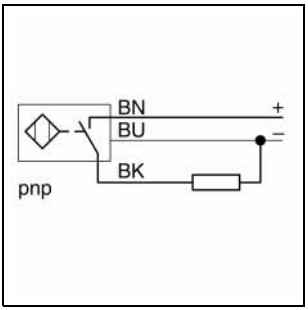

Specifications	
Voltage	10 ... 30 V DC
Current	Max. 200 mA

9 STORAGE

9.1 Hose pump

- Store the hose pump or pump parts in a dry area. Make sure that the hose pump or pump parts are not exposed to temperatures lower than -40 °C (-40 °F) or higher than +70 °C (+158 °F).
- Cover the openings of the inlet and outlet ports.
- Prevent corrosion of untreated parts. For this purpose use the correct protection or packaging.
- After a long period of standstill or storage, the static load on the pump hose may have caused permanent deformation, which will reduce the life of the pump hose. To prevent this, remove the pump hose when the pump is not going to be used for a period of time.

9.2 Pump hose

- Store the pump hose in a cool and dark room. After two years the hose material will age, which will reduce the life of the hose.

10 TROUBLESHOOTING



WARNING
Disconnect and lock the power supply to the pump drive before any work is carried out.
Wait two minutes to make sure that the capacitors have discharged. This is necessary when the motor is fitted with a frequency controller and has single phase power supply.

If the hose pump does not function (correctly), consult the following checklist to see if you can remedy the error yourself. If you cannot, contact your distributor.

Problem	Possible cause	Correction
Failure to operate.	No voltage.	Check that the supply power switch is on.
		Check the electrical supply is available at the pump.
	Stalled rotor.	Check if the pump is stalled by incorrect fitting of the hose.
		Check the VFD settings, if applicable.
	Lubricant level monitoring system has been activated.	Check if the lubricant level monitoring system has stalled the pump. Check the functioning of the lubricant level monitoring system, and check the lubricant level.

Problem	Possible cause	Correction
High pump temperature.	Non standard hose lubricant used.	Consult the distributor for the correct lubricant.
	Low lubricant level.	Add Bredel Genuine Hose Lubricant. For the required amount of lubricant refer to § 11.1.4.
	Fluid temperature too high.	Consult the distributor about the maximum temperature range of the fluid.
	Internal friction on the hose caused by blocked or poor suction characteristics.	Check pipework/valves for blockages. Ensure that the suction pipework is as short as possible and that the diameter is large enough.
	High pump speed.	Reduce pump speed to a minimum. Consult your distributor for advice on optimum pump speeds.

Problem	Possible cause	Correction
Low capacity / pressure.	Shut-off valve in the suction line (partly) closed.	Fully open the shut-off valve.
	Hose rupture or badly worn hose.	Replace the hose. Refer to § 8.5.
	(Partial) blockage of the suction line or too little fluid on the suction side.	Ensure that the suction line is clear of blockages and that sufficient fluid is available.
	Connections and hose clamps not correctly mounted, which makes the pump suck air.	Tighten connections and hose clamps.
	The filling degree of the pump hose is too low, because the speed is too high in relation to the viscosity of the product to be pumped and the inlet pressure. The suction line can be too long or too narrow or a combination of these factors.	Consult your distributor for a recommendation.
Vibration of the pump and pipework.	Suction and discharge lines are not secured correctly.	Check and secure pipework.
	High pump speed with long suction and discharge lines or high relative density or a combination of these factors.	Reduce pump speed. Reduce the line lengths on both suction and discharge where possible. Consult your distributor for a recommendation.
	Too narrow diameter of suction and/or discharge line.	Increase the diameter of the suction/discharge lines.

Problem	Possible cause	Correction
Short hose life.	Chemical attack of the hose.	Check the compatibility of the hose material with the fluid to be pumped. Consult your distributor for correct hose selection.
	High pump speed.	Reduce pump speed.
	High discharge pressures.	Maximum working pressure 800 kPa (116 psi). Check that the discharge line is not blocked, the shut-off valves are fully opened and the pressure relief valve functions properly (if present in the discharge line).
	High product temperature.	Consult your distributor for correct hose selection.
	High pulsations.	Restructure the discharge and inlet conditions.
Hose pulled into the pump.	Insufficient or no hose lubricant in the pumphead.	Add extra lubricant. Refer to § 8.4.
	Incorrect lubricant: no Bredel Genuine Hose Lubricant in the pumphead.	Consult the distributor for the correct lubricant.
	Extremely high inlet pressure - larger than 300 kPa (43.5 psi).	Reduce the inlet pressure.

Problem	Possible cause	Correction
Lubricant leakage at bracket.	Hose blocked by an incompressible object in the hose. The hose cannot be compressed and will be pulled into the pump housing.	Remove hose, check for blockages and replace if necessary.
	Bolts of bracket loose.	Tighten to the specified torque settings. Refer to § 11.1.6.
	Bolts of hose clamps loose.	Tighten to the specified torque settings. Refer to § 11.1.6.
Leakage from the rear of the pump housing "Buffer zone".	Damaged seal ring.	Replace seal ring.
Lubricant leakage at cover.	Damaged seal ring.	Replace seal ring.
	Bolts not tightened.	Tighten to the specified torque settings. Refer to § 11.1.6.
	Bolting torque too low.	Tighten to the specified torque settings. Refer to § 11.1.6.

11 SPECIFICATIONS

11.1 Pumphead

11.1.1 Performance

Description		Unit	APEX10	APEX15	APEX20
			∅ 10 mm	∅ 15 mm	∅ 20 mm
Max. capacity, continuous		m^3/h	0.28	0.55	0.87
		US gpm	1.23	2.42	3.83
Max. capacity, intermittent*		m^3/h	0.39	0.77	1.20
		US gpm	1.72	3.39	5.28
Capacity per revolution		l/rev	0.046	0.091	0.145
		US gal/rev	0.012	0.024	0.038
Max. permissible working pressure	with low-pressure rotor	kPa	400	400	400
		psi	58	58	58
	with medium-pressure rotor	kPa	800	800	800
		psi	116	116	116
Permissible ambient temperature		°C	-20 to +45		
		°F	-4 to +113		
Permissible fluid temperature		°C	-10 to +80		
		°F	+14 to +176		
Sound level at 1 m (4 ft)		dB(A)	60		

* Intermittent duty: "Let the pump stand still to cool down for at least one hour after two hours of operation".

11.1.2 Materials

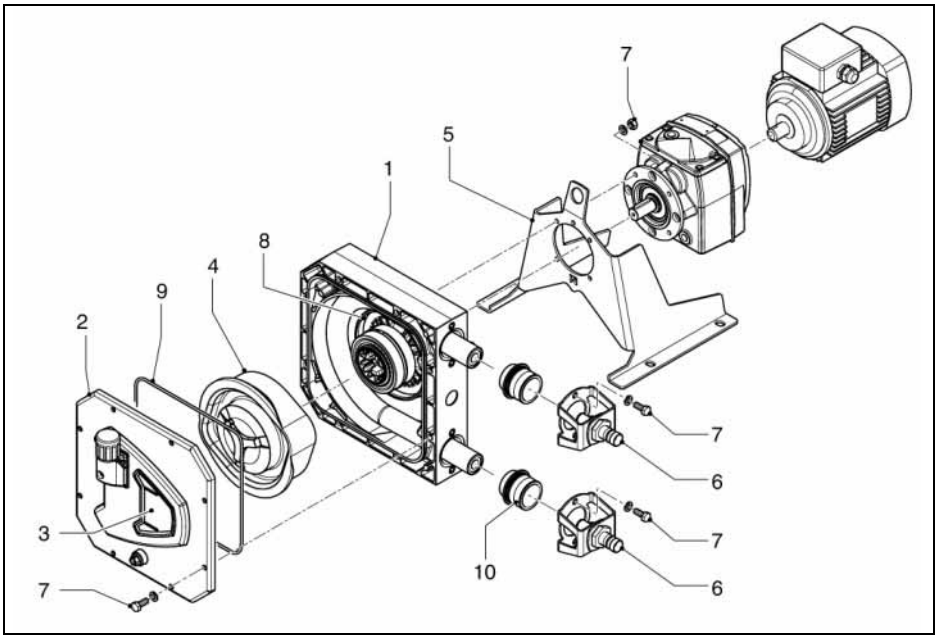

Pos	Description	Material
1	Pump housing	Aluminium EN-AC-46000
2	Cover	Copolyester
3	Cover window	PMMA
4	Pump rotor	Cast-iron
5	Pump support	Galvanized steel (AISI 316 optional)
6	Bracket	AISI 316
7	Fasteners	AISI 316
8	Dynamic sealing behind the rotor	NBR
9	Cover seal	EPDM
10	Sealing bush at hose connection	EPDM

11.1.3 Surface treatment

- After surface preparation, one layer of two-component acrylate is used for surface protection. Standard colour is RAL 3011.
- All galvanized parts, exclusive of mounting articles, have been provided with an electrolytic zinc layer of 15 - 20 microns (0.6 - 0.8 mil).

11.1.4 Lubricant table pump

	Unit	APEX
Lubricant	-	Bredel Genuine Hose Lubricant
Required quantity	litres	1.0
	gallons	0.26

Bredel Genuine Hose Lubricant is registered at NSF: NSF Registration N° 123204; Category Code H1. See also: www.NSF.org/USDA.

	Consult your distributor if you should require additional information with respect to the safety data sheet.

11.1.5 Weights

Description		Unit	Weight
Pumphead (inclusive of hose, lubricant and pump support)		kg	16.5
		lbs	36.4
Pump support		kg	2.4
		lbs	5.3
Rotor		kg	4.8 ... 5.6
		lbs	10.6 ... 12.3
Hose		kg	0.5 ... 0.7
		lbs	1.1 ... 1.5
Pump cover (complete)		kg	0.7
		lbs	1.5
Coupling		kg	0.4
		lbs	0.9
Gearbox	GA52...	kg	4.7
		lbs	10.4
	GA53...	kg	4.8
		lbs	10.6
Electric motor		kg	5.0 ... 8.3
		lbs	11.0 ... 18.3

11.1.6 Torque figures

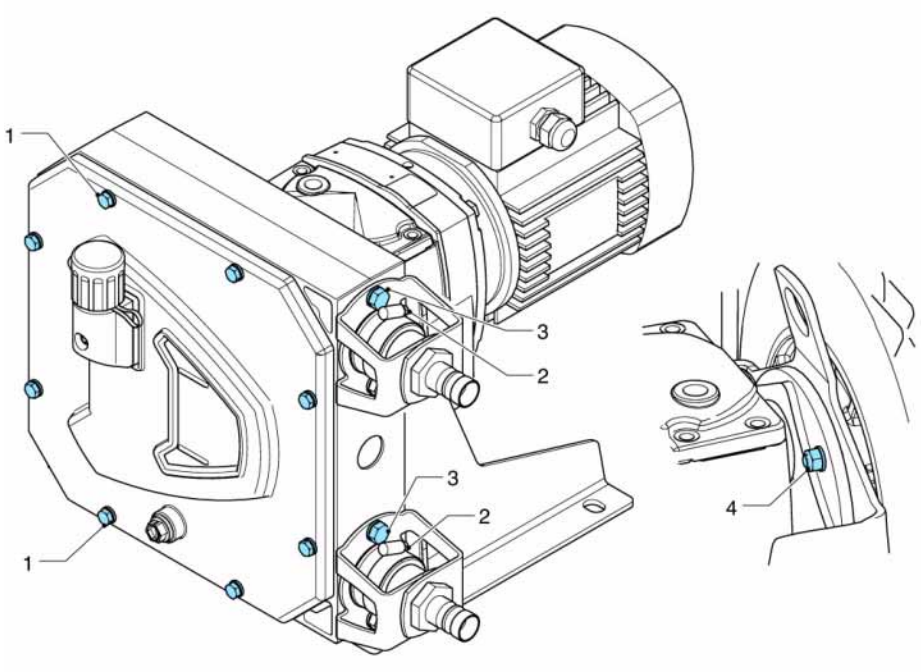

Pos	Description	Bolt size*	Unit	Torque
1	Cover	M6x25	Nm	1.5
			lbf in	13
2	Hose clamp**		Nm	3
			lbf in	27
3	Bracket	M8x20	Nm	25
			lbf in	221
4	Support + Gearbox	nut M6	Nm	10
			lbf in	89

* All bolts are class 8.8.

** Due to creeping of the hose material, the hose clamp force initially reduces in time. If leakage starts, re-tighten the hose clamp to the specified torque level. The listed torque values apply to a new and properly greased hose clamp. See also § 8.5.3 for extra instructions and hose clamp installation.

11.2 Gearbox

Type	Co-axial gearbox with helical gears
Number of stages	Two or three
Lubrication	Lubricated for life
Mounting position	IM 3001 (IM B5) flanged gearbox with keyed shaft in horizontal position.
Motor adapter	Integrated
Optional motor adapter	Adapter in conformance with IEC-B5 or NEMA C.

11.3 Electric motor

Standard electric motor design is an enclosed three-phase asynchronous motor. A thermal safety device to prevent motor overload is optional.



In case of doubt about the local applicable regulations for the drive connection, contact your distributor.

Protection class	IP55/IK08
Insulation class	F
Increase in temperature	Within class B
Voltage/frequency	Refer to identification plate on motor.

11.4 Variable Frequency Drive (VFD) (optional)

The Bredel Variable Frequency Drive (VFD) has been preprogrammed and only needs to be connected to the mains.

RFI filter	Integrated RFI filter B (industrial applications).
Control	Manual control for setting the speed and the keys for starting forward, stop and starting reverse.

Protection class	IP65
Mains power supply	There are three types available; the choice depends on the local electricity grid: • 200-240 V ± 10%; 50/60 Hz ± 5%; 1 ph • 200-240 V ± 10%; 50/60 Hz ± 5%; 3 ph • 400-480 V ± 10%; 50/60 Hz ± 5%; 3 ph

11.5 Parts list

11.5.1 Ordering parts

Specify the item number, description and pump size (APEX10, APEX15 or APEX20) to identify the component you need. Also specify the quantity you need.

11.5.2 Overview

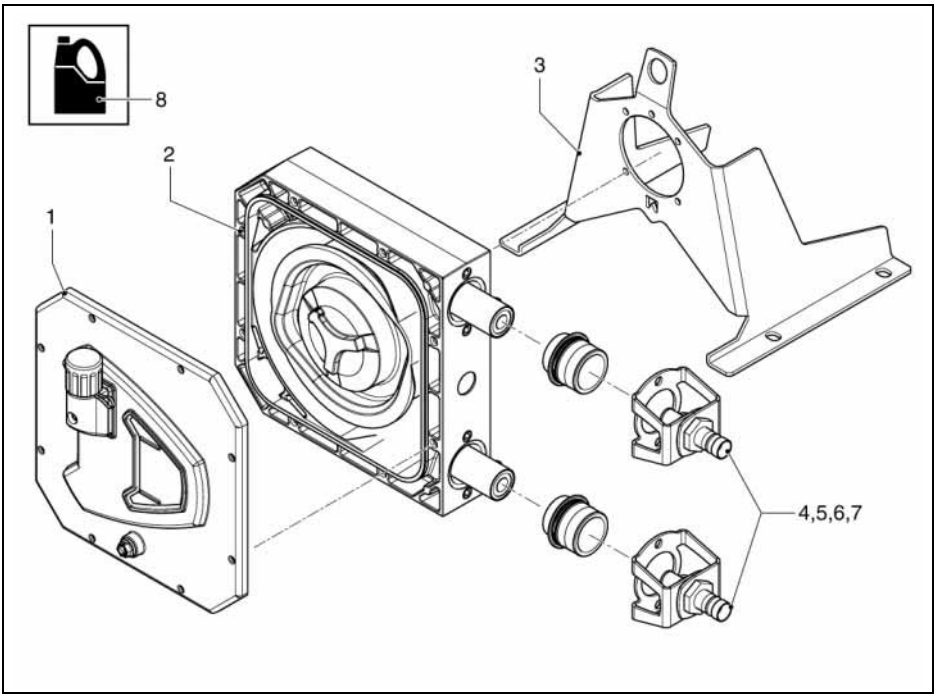

Pos.	Description
1	Cover assembly. Refer to § 11.5.3.
2	Pumphead assembly. Refer to § 11.5.4.

Pos.	Description
3	Pump support assembly. Refer to § 11.5.5.
4	Barbed nipple assembly. Refer to § 11.5.6.
5	Threaded nipple assembly. Refer to § 11.5.7.
6	Flange assembly (1). Refer to § 11.5.8.
7	Flange assembly (2). Refer to § 11.5.9.
8	Lubricant. Refer to § 11.5.10.

11.5.3 Cover assembly

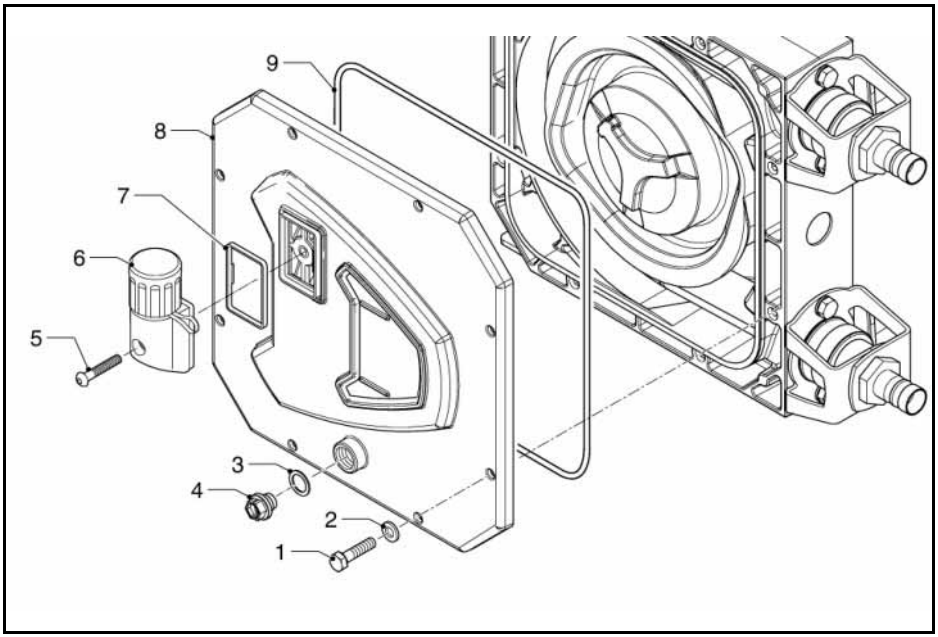

Pos.	Qty.	Description
1	8	Cover screw
2	8	Cover screw washer
3	1	Drain plug O-ring
4	1	Drain plug
5	1	Breather screw
6	1	Breather

Pos.	Qty.	Description
7	1	Breather gasket
8	1	Cover
9	1	Cover seal

11.5.4 Pumphead assembly

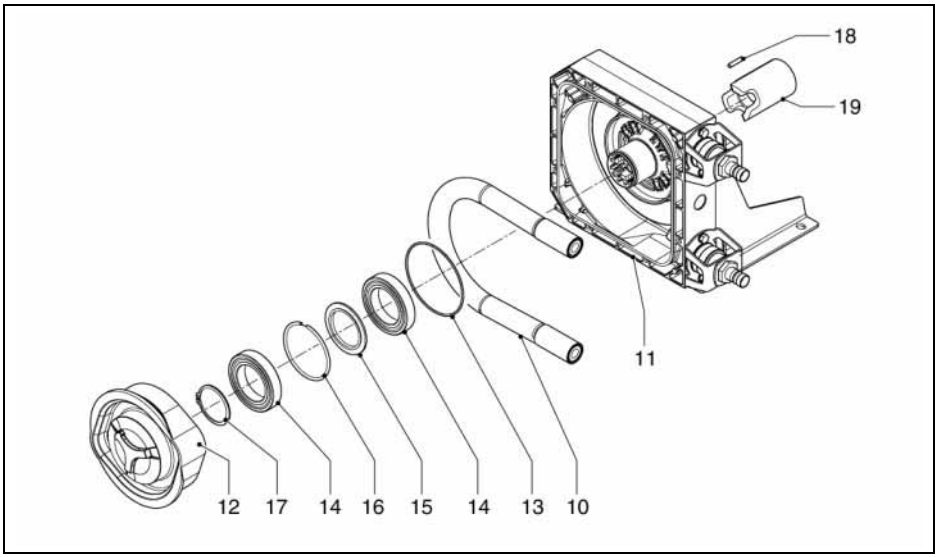

Pos.	Qty.	Description
10	1	Hose NR
	1	Hose NBR
	1	Hose EPDM
	1	Hose CSM
11	1	Pump housing
12	1	Rotor, low-pressure (L)
		Rotor, medium-pressure (M)
13	1	Seal ring
14	2	Bearing
15	1	Spacer ring
16	1	Retaining ring
17	1	Circlip

Pos.	Qty.	Description
18	4	Support stud
19	1	Coupling, ∅ 20 x 63 mm
		Coupling, ∅ 25 x 63 mm

11.5.5 Support assembly

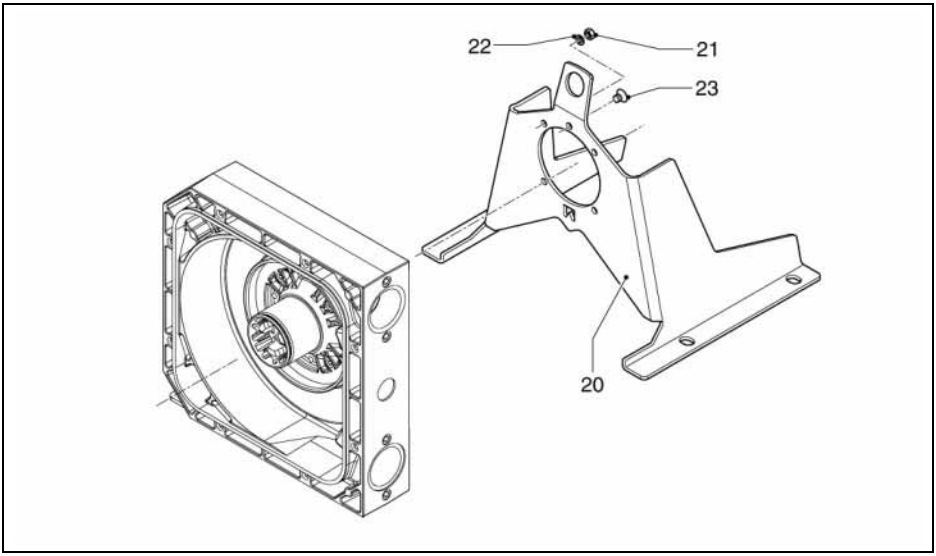

Pos.	Qty.	Description
20	1	Pump support
21	4	Support nut
22	4	Support nut washer
23	1	Orientation screw

11.5.6 Barbed nipple assembly (PTFE/PDVF)

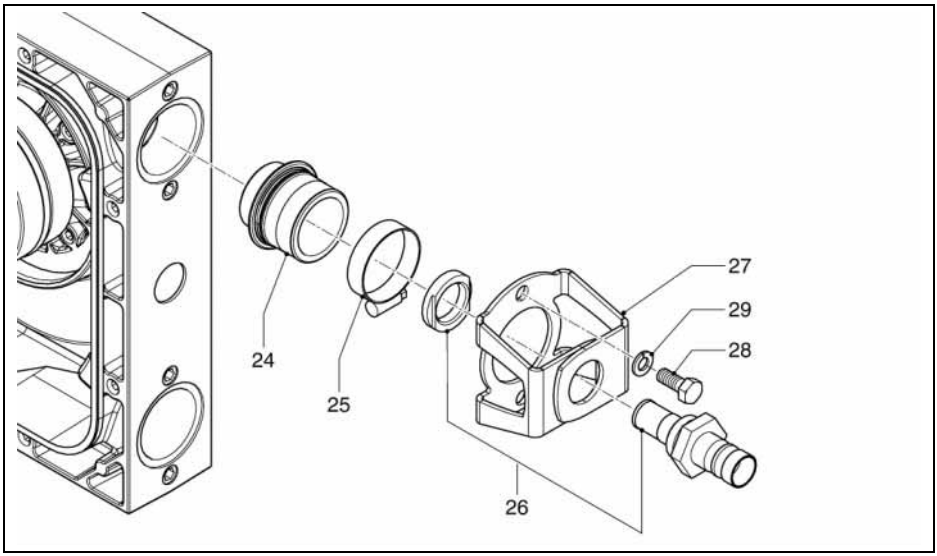

Pos.	Qty.	Description
24	2	Rubber bush
25	2	Hose clamp
26	2	Barbed nipple PTFE
		Barbed nipple PVDF
27	2	Bracket
28	4	Bracket bolt
29	4	Bracket bolt washer

11.5.7 Hose or threaded nipple assembly (AISI 316/PP/PVC)

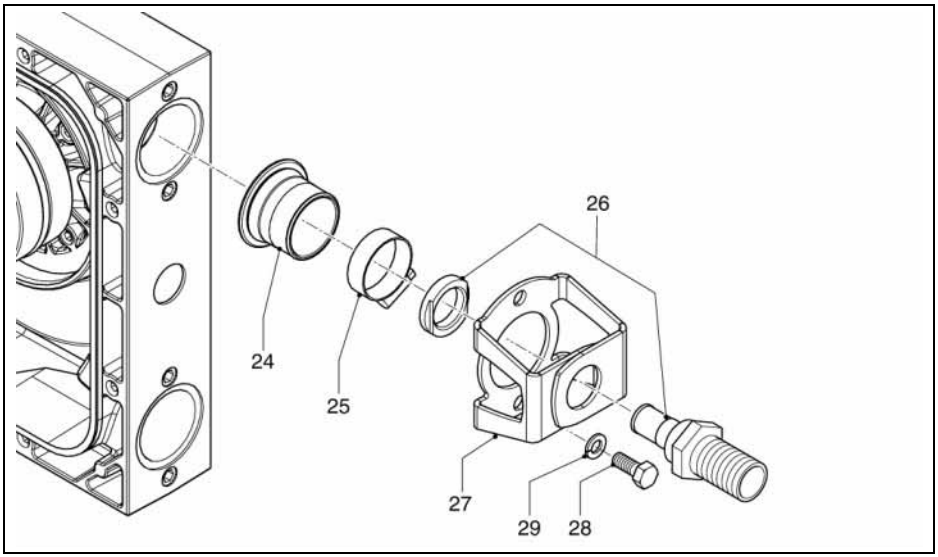

Pos.	Qty.	Description
24	2	Rubber bush
25	2	Hose clamp
26	2	Barbed nipple SS
		Threaded nipple BSP SS
		Threaded nipple DIN 11851 SS
		Threaded nipple NPT SS
		Threaded nipple NPT PP
		Threaded nipple NPT PVC
27	2	Bracket
28	4	Bracket bolt
29	4	Bracket bolt washer

11.5.8 Flange assembly with insert

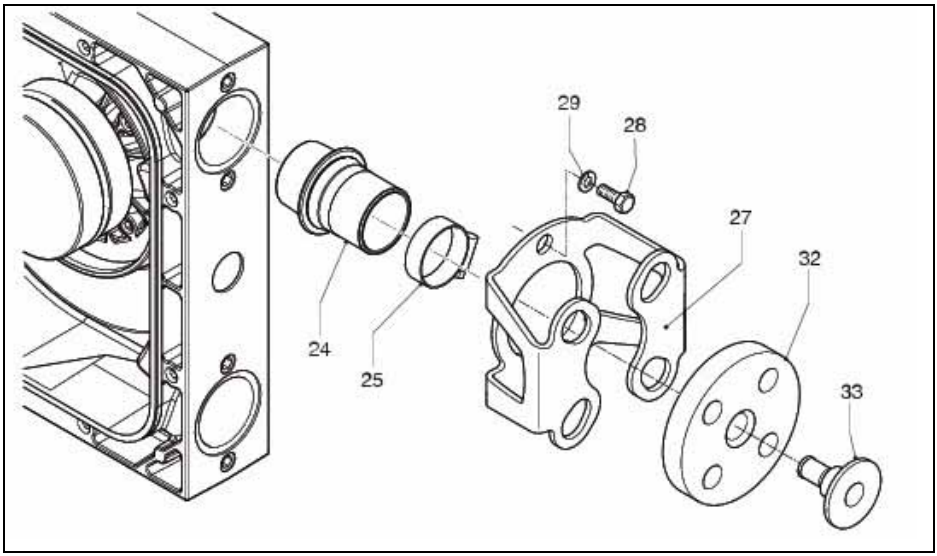

Pos.	Qty.	Description
24	2	Rubber bush
25	2	Hose clamp
27	2	Flange bracket
28	4	Bracket bolt
29	4	Bracket bolt washer
32	2	Flange ASA
33	2	Insert PP

11.5.9 Flange assembly with threaded nipple

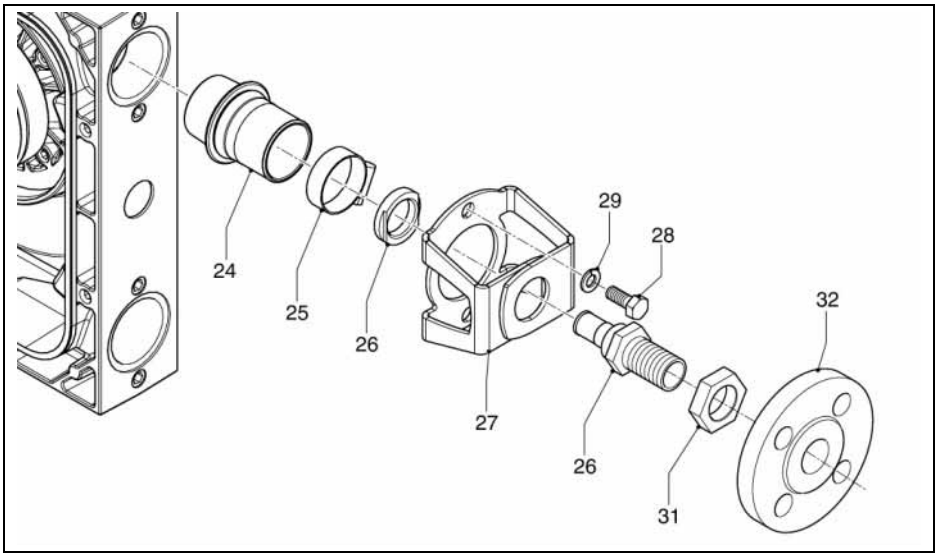

Pos.	Qty.	Description
24	2	Rubber bush
25	2	Hose clamp
26	2	Threaded nipple (BSP) SS
27	2	Bracket
28	4	Bracket bolt
29	4	Bracket bolt washer
31	2	Nipple nut
32	2	Threaded flange DIN SS
	2	Threaded flange ASA SS

11.5.10 Lubricant

Pos.	Qty.	Description
	1	1 l can Bredel Genuine Hose Lubricant

SAFETY FORM

Product Use and Decontamination Declaration

In compliance with the **Health and Safety Regulations**, the user is required to declare those substances that have been in contact with the item(s) you are returning to Watson-Marlow Bredel B.V. or any of its subsidiaries or distributors. Failure to do so will cause delays in servicing the item or in issuing a response. Therefore, **please complete this form** to make sure we have the information before receipt of the item(s) being returned. A completed copy must be attached to **the outside of the packaging** containing the item(s). You, the user, are responsible for cleaning and decontaminating the item(s) before returning them.

Please complete a separate Decontamination Certificate for each item returned. **RGA no**.....

1 Company ....

Address ....

Postal code .....

Telephone..... Fax number .....

2 Product .....

2.1 Serial Number .....

2.2 Has the Product been used?

YES ☐ NO ☐

If yes, please complete all the following paragraphs.

If no, please complete paragraph 5 only

3 Details of substances pumped

3.1 Chemical Names

a) .....

b) .....

c) .....

d) .....

3.2 Precautions to be taken in handling these substances:

a) .....

b) .....

c) .....

d) .....

3.3 Action to be taken in the event of human contact:

a) .....

b) .....

c) .....

d) .....

3.4 Cleaning fluid to be used if residue of chemical is found during servicing;

a) .....

b) .....

c) .....

d) .....

4 I hereby confirm that the only substances(s) that the equipment specified has pumped or come into contact with are those named, that the information given is correct, and the carrier has been informed if the consignment is of a hazardous nature.

5 Signed .....

Name .....

Position .....

Date .....

Note:

To assist us in our servicing please describe any fault condition you have witnessed.

.....

.....

.....

.....

.....

Watson-Marlow Pumps Group
37 Upton Technology Park
Wilmington, MA 01887
USA
Telephone: 800 - 282 - 8823
978 - 658 - 6168
Fax: 978 - 658 - 0041

Internet: www.wmpg.com
E-mail: support@wmpg.us

2921.0321 TS11-002-0

© 2012 Watson-Marlow Bredel B.V.

Installation, Operation, and Maintenance Manual



LAKOS High Efficiency Product ™

eHTX Series High Efficiency Separators

LAKOS
Separators and Filtration Solutions

1365 North Clovis Avenue
Fresno, California 93727-2282
(559) 255-1601
info@lakos.com www.lakos.com

LS-926 (2/13)

TABLE OF CONTENTS

Page 2..……Table of Contents

Page 3..……Principle of Operation

Page 4..……Pressure Drop vs. Flow

Page 4..……Separator Models

Page 5..……Installation Instructions

Page 6..……Inlet/Outlet Piping

Page 7-8....……...Maintenance

Page 9-11..…..…….Trouble Shooting

Page 12..…..…….Separator Manifolding

Page 13...……..Spare Parts

Page 14…....……Notes

Principle of Operation "How it Works"

LAKOS *e*HTX Separators are designed specifically to remove solids from liquids. Each model is calculated for use within a prescribed flow range for maximum performance and solids removal. Flow rates above and below the recommended range may affect such performance.

Upon tangential entry, the liquid/solids are drawn through internal tangential slots and accelerated into the separation chamber where solids heavier than the carrying liquid are centrifugally separated and allowed to accumulate in the unit's collection chamber for eventual purging. The liquid (free of separable solids) is then drawn to the vortex and up through the separator's outlet.

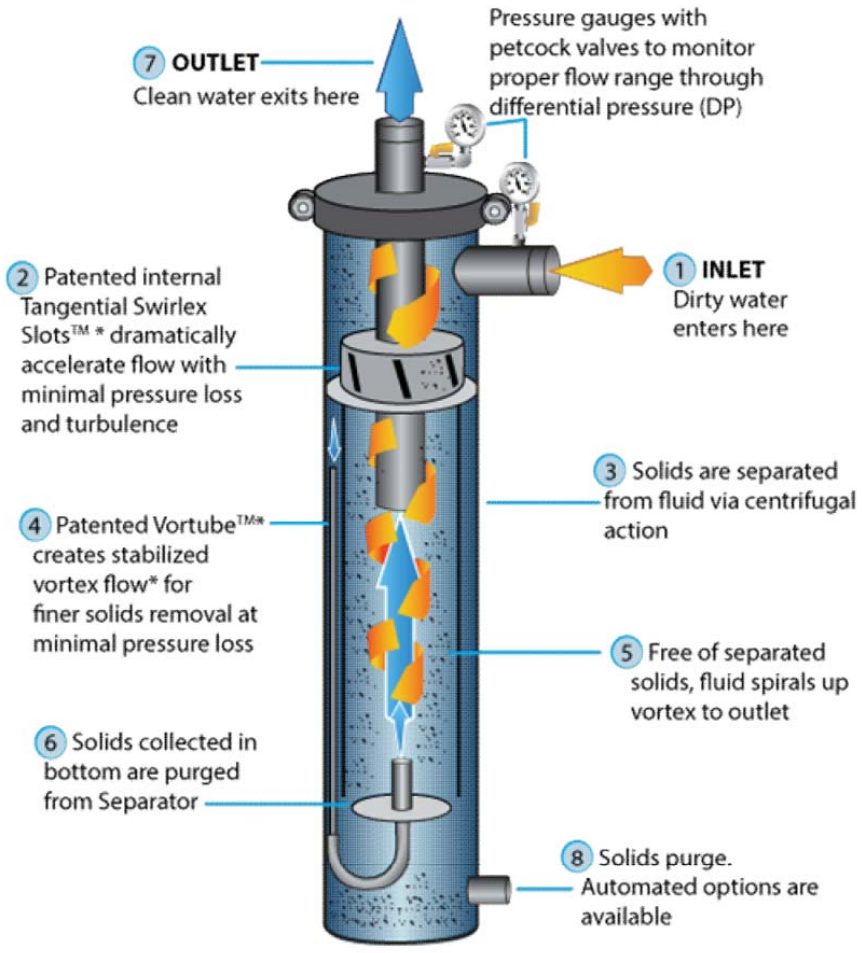

Flow vs. Pressure Drop Chart

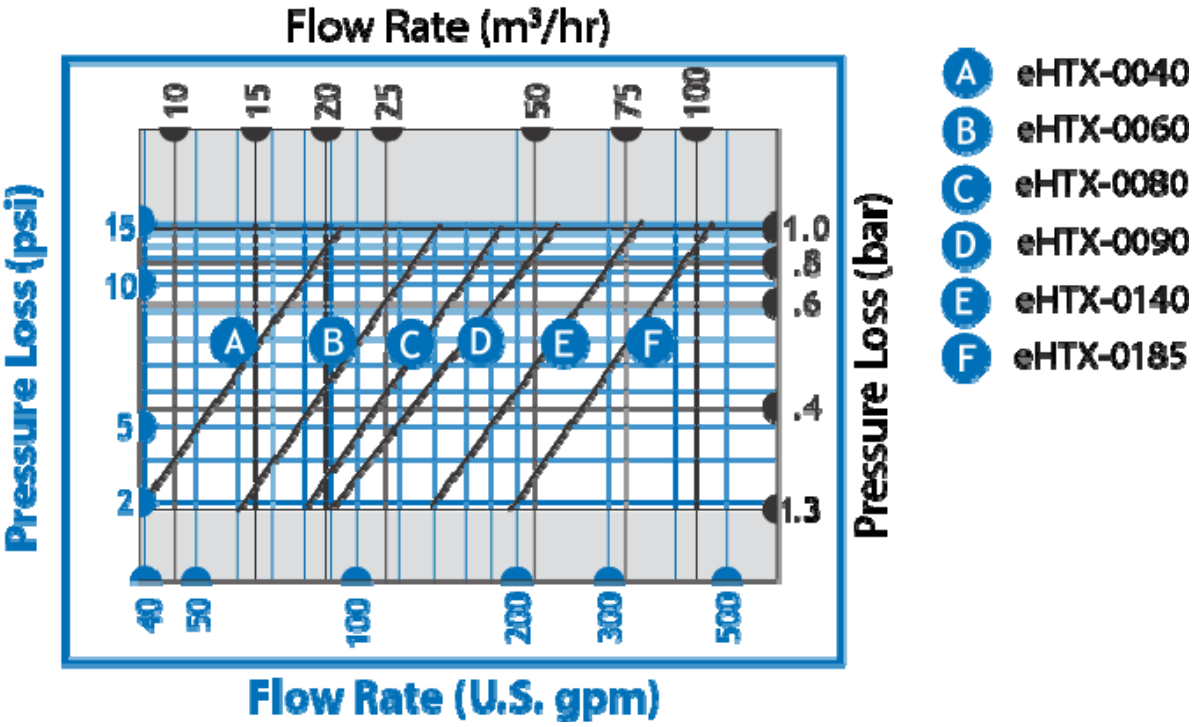

*e*HTX Separator Model and Flow Chart

Model	Flow Range		Inlet/Outlet Grooved Size	Collection Chamber Capacity		Weight Empty		Weight with Water	
	US gpm	m³/hr		gal	liters	lbs	kg	lbs	kg
*e*HTX-0040-V	40-95	9-21	1-1/2 inch	0.6	2.3	184	83	257	117
*e*HTX-0060-V	60-140	13-31	2 inch	0.6	2.3	221	100	305	138
*e*HTX-0080-V	80-185	18-42	2-1/2 inch	1.2	4.5	298	135	456	207
*e*HTX-0090-V	90-230	20-52	3 inch	1.2	4.5	328	149	508	230
*e*HTX-0140-V	140-325	32-74	4 inch	1.7	6.4	486	220	772	350
*e*HTX-0185-V	185-450	42-102	4 inch	1.7	6.4	498	226	807	336

Installation Instructions

1. LAKOS Separators are shipped on steel skids or in wooden crates. Support legs (22 ½° low profiles only) are detached. Lifting lugs, located on the unit's side and/or flanges, are provided for hoisting as necessary.

2. A suitable foundation is necessary to accommodate the LAKOS Separator's weight *including liquid*. Anchor bolts are recommended in the base of the legs (low profile) or skirt (vertical profile).

3. Prior to installation, inspect the inlet/outlet/purge connections for foreign objects inserted during shipping/storage.

4. It is recommended that the inlet/outlet pipe connections to the LAKOS Separator should be a straight run of at least five pipe diameters (if possible) to minimize turbulence and enhance performance. It is best to keep pipe runs as straight as possible and minimize the number of elbows in the piping.

5. Proper purge hardware and/or solids-handling equipment is required to flush separated solids from the separator.

6. All LAKOS Separators operate within a prescribed flow range (pipe size is not a factor in model selection). Use appropriate hardware to match the inlet/outlet size. Grooved couplings are not included with the separator. Optional flanged connections are available upon request.

7. Inlet pressure to the LAKOS Separator must be at least equal to or greater than the anticipated pressure loss through the separator plus 15 psi (1 bar) plus whatever downstream pressure is required. See page 4 for "Flow vs. Pressure Loss" chart.

8. Pressure gauges are required at both the inlet and outlet of the separator in order to monitor pressure loss and proper flow. If the separator operates with an open discharge, a valve should be installed to create a back pressure of at least 5 psi (0.3 bar).

9. Winterizing is important if the LAKOS Separator is to remain idle in freezing temperatures. Drain liquid as necessary to avoid expansion of water to ice and related damage. Heat tracing and insulation can also be used to keep liquid from freezing in the separator and causing damage.

Recommended Inlet & Outlet Piping

The inlet and outlet piping of a separator are important for controlling vibration of the unit. The vibration is more prevalent in units larger than 6", however, LAKOS recommends the illustration configuration below be followed on all units. The factory should be consulted on units larger than 6" if configurations cannot be followed.

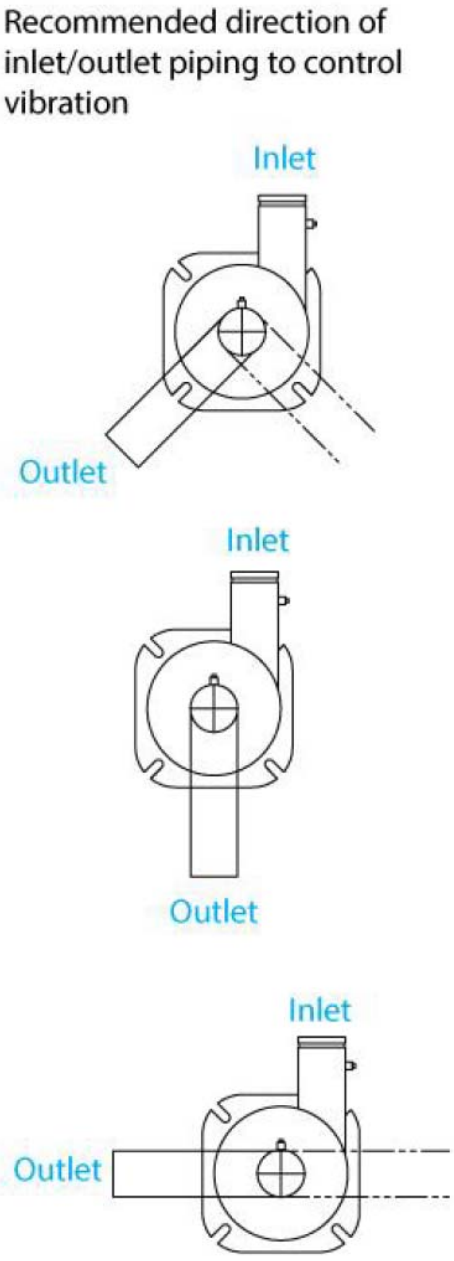

Maintenance/Purging

1. ***LAKOS Separators must be purged regularly.*** The over-accumulation of separated solids will overfill the separator's collection chamber, substantially affecting performance and causing undue wear.

2. Several purging options are available and all may be performed while the LAKOS Separator is in full operation.
   a. **Manual:** A full-port, straight-through valve may be installed on the standard purge opening and actuated manually as necessary to purge separated solids.
   b. **Semi-Automatic:** The use of LAKOS Separators in a given application typically implies the need for heavy or unusual solids removal. ***A LAKOS Solids Recovery Vessel System (SRV)*** is therefore recommended. The SRV-816 or SRV-833 allows for continuous purging of the solids collected into a separate collection bag. Once the bag is full with solids, the bag is emptied. The bag (10 micron recommended) can be cleaned and reused or simply replaced. Consult your LAKOS representative for details on the solids recovery vessel and accessories.
   c. **Automatic:** The use of LAKOS Separators in a given application typically implies the need for heavy or unusual solids removal. ***A LAKOS Auto-Purge System*** is therefore recommended. The Automated Ball Valve (ABV) and Electric Fail-Safe Valves (EFS) are electric actuated ball valve assemblies with timer controls to allow for the adjustment of the purge frequency and duration based on a job specific application. The EFS is a battery backup style failsafe actuator that will ensure closure of the valve even if there is a loss of power to the controller. Consult your LAKOS representative for details.

3. *e*HTX Separators feature standard purge outlets. Prior to start-up, the installation of a manual valve on the purge is recommended so that this outlet may be serviceable at any time for either supplemental purging or as a stand-by, should the primary purge line ever require servicing.

4. ***Important:*** All purge hardware should be installed prior to any elbows or turns in the purge piping. Avoid "uphill" purging, which can clog piping and hinder effective solids evacuation.

5. To determine the necessary ABV or EFS purging frequency, purge often at first and calculate the proper rate with regard to the actual volume of separated solids. Purge duration should be long enough to evacuate the purge chamber of solids. Frequency of purge should not exceed the time it takes to over fill the collection chamber. Consult your LAKOS representative for specific recommendations regarding your application.

6. When operating in sub-freezing temperatures, be sure to protect the separator's collection chamber and all purge line piping from freezing. Heat tracing and insulation can also be used to keep liquid from freezing in the separator and causing damage.

Maintenance Recommendations

LAKOS recommends periodic inspections of the separator to keep performance at an optimum level.

1. Flange gaskets or victaulic gaskets should be checked for leaks and replaced as necessary. Gaskets should be replaced at disassembly of separator.

2. Hand hole clean-out: Hand hole should be removed to inspect the collection chamber for unwanted build up. Inspection should be conducted annually (or when separator is shut-down for other system service routines), open the hand hole clean-out and inspect for solids accumulation or unwanted build-up in the separator's collection chamber. If necessary, remove excessive debris. Inspect gasket and replace if necessary. Check purge programming (if applicable) to be sure it is adequate to remove separated solids; if not, re-set to extend duration and/or frequency of valve actuation.

3. Pressure gauges: The gauges installed on the inlet & outlet of the LAKOS Separator help monitor proper liquid flow through the separator. They are NOT indicative of solids accumulation and should NOT be used to determine when to purge the separator. Gauges should read a pressure differential loss of 2-15 psi from inlet to outlet and that differential should remain steady with the flow of water through the separator. Fluctuations in gauge readings indicate:
    a. A change in pump flow – Inspect pump for proper operation and/or downstream piping/equipment for conditions that could create backpressure on the system flow.
    b. An obstruction in the separator – Internal slots may be clogged by unusual solids. Use a video scope to examine & remove blockages from internal slotting. Consult LAKOS if necessary.
    c. Gauge blockage – Close petcock valve, remove gauge and check for debris clogging the gauge port, which could affect an accurate gauge reading.

4. Separator slots should be inspected during facility pipe inspection. Inspection of slots is recommended when separator performance is suspect. Slots should be checked for obstruction and wear.

5. Visual inspection of the separator should be conducted at least once a month. Visual inspection should also include observing the inlet and outlet gauges on the separator. This inspection will indicate the pressure drop across the separator. The pressure drop and actual flow rate can be compared to the product brochure to determine if the separator is operating within its expected performance range. Automatic purge or manual purge should be checked for leaks and operation. Purge valve seats or diaphragms should be changed as necessary.

Trouble-Shooting Guidelines for Separator Installations

1. **Verify Actual Flow Rate:** Use pressure gauges to indicate differential pressure and flow meter to verify flow rate. (Multiple pumps used to increase flow are installed in parallel (into common manifold); multiple pumps to increase pressure are installed in series (one after another).

   Flow meters should be installed prior to the separator. Flow meters installed after the separator will indicate erroneous data.

2. **Plumbing Two Separators:** Do not plumb two separators from two independent pumps into the same outlet header without installing balancing valves on the discharge of each separator. The balancing valves must be set to achieve a pressure loss across each separator that indicates a flow rate (according to that model's published flow chart) equal to the flow rate anticipated through the pump that feeds each separator.

3. **Verify Actual Inlet Pressure:** Actual inlet pressure must be at least 15 psi (1.03 bar). A minimum backpressure of 5 psi (.34 bar) must be created at the separator discharge. This may be accomplished via process equipment, piping, or a valve. Unrestricted open discharge to a pit, sump, etc.,will result in unacceptable performance.

   Be sure that no source of vacuum/suction exists in the piping arrangement. If vacuum/suction exists (i.e. downward piping after the separator, pump suction installation, booster pump etc.), put a valve between the separator and the suction source and pressure gauges on either side of the valve. Throttle the flow until the pressure loss across the separator indicates the published flow rate which most closely resembles the anticipated flow rate through the separator.

4. **Vibration:** Check installation piping inlet & outlet configurations (see appropriate product sheets for model of separator installed). Mild vibration is possible in some installations and should be considered normal. Excessive vibration is typically due to entrained air (use air vents), improper piping (follow the installation instructions) or system vibration (amplified at the separator).

   Units should be secured properly to the floor or wall. If separator is hung, stabilizers may need to be added. The foundation must be sturdy enough to support the weight of the product (expected wet weight can be obtained from the product literature).

   The use of expansion joints is advisable with all separator installations. It is particularly recommended that these devices be employed when piping arrangements cannot comply with the configurations suggested by LAKOS product literature.

5. **Vertical Units:** Be aware that solids may accumulate within the separator for a period of time until the solids reach the level of the purge outlet. The purge outlet is not flush with the bottom of the solids collection chamber.

6. **Purging:** Purge line piping should be as straight as possible to desired disposal destination. Avoid uphill piping, multiple elbows and low points where solids may accumulate and block the piping. Unless advised otherwise, do not reduce the piping size from that of the separator's purge outlet size; restrictions can cause blockage and prevent proper purging of separated solids.

   Purge duration should be long enough to not only evacuate solids from the separator, but also to push the solids through the entire length of purge line piping to desired disposal. Typically, we recommend that you program automatic valves, especially motorized ball valves, to purge for no less than 20-25 seconds. This provides time for the valve to remain fully open long enough to flush a separator's collection chamber. Consult LAKOS for unusual circumstances.

   Important: Note that the collection chamber capacity of each separator (see page 4) should typically not be exceeded. The solids must include sufficient fluid to navigate the purge valve & purge line piping. It depends on the solids' capacity to compact and the time frame it takes to accumulate in the separator. Generally, solids should not be allowed to accumulate in the separator's collection chamber for long periods of time; purging at least daily is recommended when the separator is in operation, more often if the solids tend to compact tightly/easily.
   Continuous purging should not exceed 10% of the inlet flow. The use of a valve to bleed solids from a separator must be monitored to be sure that the reduced orifice does not become clogged with solids.

   Oversizing the purge line piping may allow solids to settle in the piping; be aware that velocity is needed to flush solids through the purge line piping.

   Estimated water & solids volume through a ¾ inch purge outlet is estimated at 10-45 gallons, and a 1 ½ inch purge outlet is estimated at 35-150 gallons. That's a combination of both solids and liquid. The variable takes into account the separator size, flow rate and system pressure. Allow adequate drainage or retention capacity for this volume per purge cycle.

7. **Manifolding Separators:** Two or three separators in parallel (for higher flow rates, see page 12) must be purged separately…do not join purges together.

8. **Additional Installation Piping for Separator Accessiblity:** Separators which feature a removable upper chamber should be installed with a spool in order to facilitate the removal of the upper chamber.

9. **Flanges/Couplings:** All flanges and/or grooved couplings should have the appropriate gasket/seal in order to ensure a leak-free installation. All hand hole clean-out ports and other internal access devices should also be properly re-sealed after use.

10. **Air Relief Ports:** The appropriate air relief ports should be used at start-up to expel air from the separator.

    If the separator will be drained periodically or exposed to entrained air or gases from the piping system, air vents should be permanently installed.

11. **Down Stream Filtration:** The use of finer filtration (polishing) downstream from the separator is a common application. Be aware, however, that the barrier filter (as it accumulates more solids) causes an increasing pressure loss, which may cause the flow rate of the system to be reduced…sometimes below the recommended flow rate of the separator. This situation will often reveal itself when typical separable solids begin to show up regularly on the downstream barrier filter (leading the customer to possibly believe that the separator does not work). Always check for variations in the flow rate when down stream conditions change.

Separator Manifold

Manifolding in Parallel for High Flow Rates

When water system flow rates exceed that of any single LAKOS Separator, manifolding two or more separators together can help achieve large flow requirements. Manifolding multiple units keeps units smaller, easier to install and provides for future flow rate changes.

Example: Three eHTX-0185 Separators increases flow range to 555 - 1350 US gpm (126 - 307 m^3/hr)

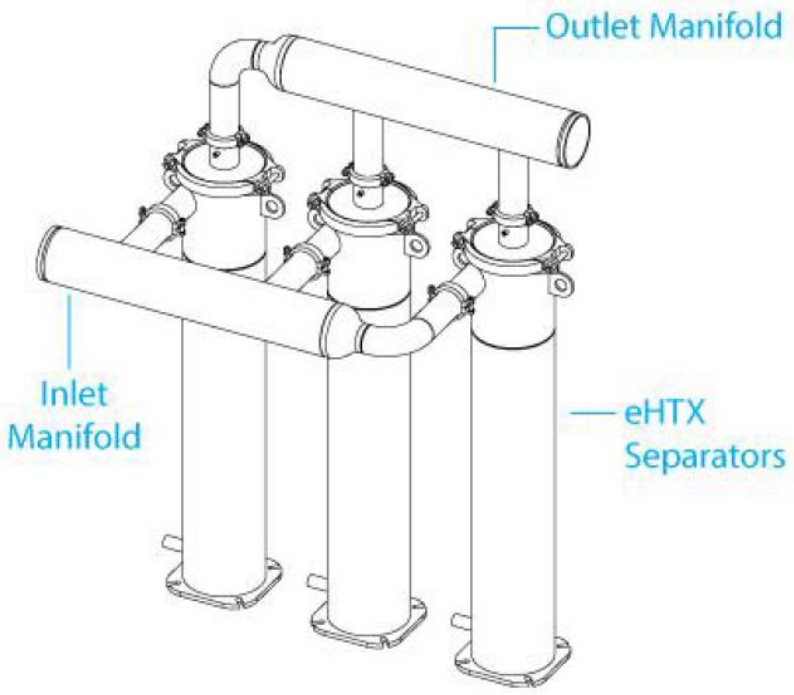

*e*HTX Spare Parts List

*e*HTX-0040-V

PART#	DESC	DESCRIPTION TWO	DESCRIPTION THREE	DESCRIPTION FOUR
120761	SHEET	RUBBER ¼" THK	2-3/4"OD x 1-15/16" ID	EPDM
106147	GASKET	COUPLING	8 TYPE E GROOVE	EPDM
118512	GKT	KIT	GAUGES 0- 160PSI	ASSEMBLY

*e*HTX-0060-V

PART#	DESC	DESCRIPTION TWO	DESCRIPTION THREE	DESCRIPTION FOUR
120761	SHEET	RUBBER ¼" THK	3" OD x 2-7/16" ID	EPDM
106147	GASKET	COUPLING	8 TYPE E GROOVE	EPDM
118512	GKT	KIT	GAUGES 0- 160PSI	ASSEMBLY

*e*HTX-0080-V

PART#	DESC	DESCRIPTION TWO	DESCRIPTION THREE	DESCRIPTION FOUR
120761	SHEET	RUBBER ¼" THK	3-7/8" OD x 3-1/16" ID	EPDM
106149	GASKET	COUPLING	10 TYPE E GROOVE	EPDM
118512	GKT	KIT	GAUGES 0- 160PSI	ASSEMBLY

*e*HTX-0090-V

PART#	DESC	DESCRIPTION TWO	DESCRIPTION THREE	DESCRIPTION FOUR
120761	SHEET	RUBBER ¼" THK	3-7/8" OD x 3-1/16" ID	EPDM
106149	GASKET	COUPLING	10 TYPE E GROOVE	EPDM
118512	GKT	KIT	GAUGES 0-160PSI	ASSEMBLY

*e*HTX-0140-V

PART#	DESC	DESCRIPTION TWO	DESCRIPTION THREE	DESCRIPTION FOUR
120761	SHEET	RUBBER ¼" THK	4-1/2" OD x 3-9/16" ID	EPDM
106150	GASKET	COUPLING	12 TYPE E GROOVE	EPDM
118512	GKT	KIT	GAUGES 0-160PSI	ASSEMBLY
106205	GASKET	HAND HOLE	4" x 6"	NEOPRENE

*e*HTX-0185-V

PART#	DESC	DESCRIPTION TWO	DESCRIPTION THREE	DESCRIPTION FOUR
118504	SHEET	RUBBER ¼" THK	5" OD x 4-1/16" ID	EPDM
106150	GASKET	COUPLING	12 TYPE E GROOVE	EPDM
118512	GKT	KIT	GAUGES 0- 160PSI	ASSEMBLY
106205	GAUGE	HAND HOLE	4" x 6"	NEOPRENE

Notes:

Separator Model:_____

Sales Order #:_____

Purchase Date:_____

Distributor:_____

System Flow:_____ **Separator Delta P:**_____

LAKOS
Separators and Filtration Solutions

1365 North Clovis Avenue
Fresno, Ca 93727-2282

Fax: 1-559-255-8093
Phone: (559)255-1601
info@lakos.com www.lakos.com

MET-PRO
Global Pump Solutions

A Met-Pro Fluid Handling Technologies Business
Combining the Resources of **Dean Pump, Fybroc & Sethco**

Fybroc® series 1530 horizontal pumps

INSTALLATION MANUAL



MET PRO
CORPORATION

INDEX

	Page
Fybroc Warranty	3
Installation Instructions	4
Location	4
Foundation	4
Piping the Pump	4
Suction Piping	5
Discharge Piping	5
Ancillary Piping	5
Electrical Connections	6
Start-up and Operating Procedures	7
Lubrication	7
Seal Flushing	7
Mechanical Seals	7
Priming	7
Starting	7
Operational Check List	7
Maintenance	7
Motor	7
Trouble Check List	8
Assembly/Disassembly Procedures	9
General	9
Disassembly	9
Assembly	10
John Crane Type 8B2	10
John Crane Type 8-1T	11
John Crane Type 8-D	12
Impeller Adjustment	13
Operational Start-up Checklist	14
Sectional Drawings	15
1530 Group I	15
1530 Group II	16
Typical Mechanical Seal Installations	17
Product Flush	17
External Flush	18
Mechanical Seal Piping/Flow Requirements	19
Single Mechanical Seal	19
Double Mechanical Seal	20
Notes	21

ORDERING REPLACEMENT PARTS

For future reference fill in the following information from the pump nameplate. This will be necessary to ensure accuracy when ordering replacement parts.

Model _____
Size _____
Serial Number _____
Impeller Diameter Installed _____
Seal Type _____
Material of Construction _____

WARRANTY

FYBROC pumps are warranted by the Company, insofar as the same are of its own manufacture, against defects in materials and workmanship under proper and normal use and service, for a period of one year from the date of original shipment from the factory. FYBROC's obligation is limited, however, to furnishing without charge, F.O.B. its factory, new parts to replace any similar parts of its own manufacture so proving defective within said period, provided the Buyer has given FYBROC immediate written notice upon discovery of such defect. No allowance will be made for labor charges. FYBROC shall have the option of requiring the return of the defective material, transportation prepaid, to establish the claim.

FYBROC makes no warranty or guarantee whatsoever, either express or implied, of prime mover, starting equipment, electrical apparatus, parts or material not manufactured by Fybroc, except to the extent that warranty is made by the manufacturer of such equipment and material.

FYBROC assumes no liability for damages or delays caused by defective material, and no allowance will be made for local repair bills or expenses without the prior written approval or authority of FYBROC.

Under no circumstances will FYBROC be liable for indirect, special or consequential loss or damage of any kind and the Buyer assumes all liability for the consequences of its use or misuse by the by the Buyer, his employees, or others.

PERFORMANCE GUARANTEE

Is at the specified point of rating only and will not cover performance under conditions varying therefrom, nor for sustained performance over any period of time.

ACCEPTANCE TESTS

If required, shall be conducted in accordance with the practices as set forth in the Hydraulic Institute Standards. The expense of any such tests shall be borne by the buyer.

PERFORMANCE REPRESENTATIONS

Are based on shop laboratory tests with cold water as outlined in the Hydraulic Institute Standards.

FIELD TESTING

Due to the inaccuracies of field testing, the results of any such tests conducted by or for the Buyer shall be interpreted as being only indicative of the actual field performance of the pump. No equipment will be furnished on the basis of acceptance by results of field tests. If the buyer, after such a test, questions the performance of the pump, he may at his option request a test to establish the performance. Such tests will be conducted in accordance with the above paragraph entitled "Acceptance Tests."

ALL WARRANTIES

Are void if -

a. Pipe strains are the cause of damage.
b. Pump handles liquids other than those specified in detail.
c. NPSH lower than required by pump impeller.
d. Operating speed is higher than specified.
e. Improper field installation.

RECOMMENDATIONS FOR SPECIAL MATERIALS

To combat corrosion, abrasion, erosion, or pumping solids, foreign objects, or pumping liquids at elevated temperature, any such recommendations will be based on the best available experience of FYBROC and the supplier of the material and industry, BUT WILL NOT CONSTITUTE A GUARANTEE AGAINST THESE EFFECTS.

The foregoing warranty is made in lieu of all other warranties guarantees, obligations or liabilities, expressed or implied, by FYBROC or its representatives. All statutory or implied warranties, other than of title, are hereby expressly negated and excluded.

All illustrations and provisions in specifications are descriptive and are not intended as warranties. Penalty of any kind are not acceptable unless approved in writing by an officer of Met-Pro Corporation.

LOCATION

The pump should ideally be placed as close as possible to the liquid supply source. Allow sufficient space on the sides and overhead to permit inspection and maintenance work to be performed.

FOUNDATION

The foundation for the pump should be level, provide rigid support of pump and motor. It should also be of sufficient mass to dampen any vibrations developed. Typically this is accomplished by installing and grouting a Fybroc baseplate on a concrete foundation.

Foundation bolts of the proper size should be imbedded in the concrete with anti-rotation lugs, located by a drawing or template (See Table 1 below for bolt-size and locations). A pipe sleeve larger than the bolt should be used to allow enough lateral movement for final positioning of the bolts (See Figure 1 below). Leveling wedges or shims should be placed under the sides of the baseplate to level the unit and the foundation bolts slightly tightened.

FIGURE 1

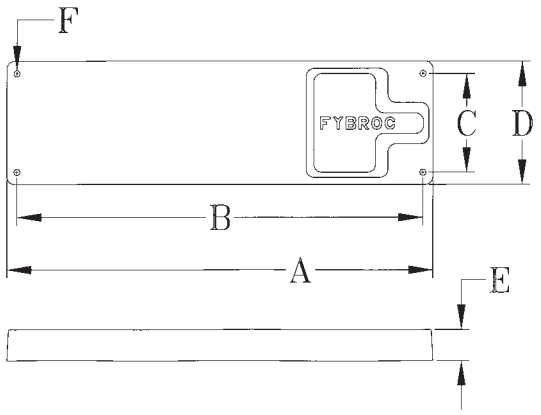

TABLE 1

Base Plate	A	B	C	D	E	F	Bolt Size
1T-22"	22	19 1/2	8	8	2 5/8	3/4	1/2
1T-24"	24	21 1/2	9	8	2 5/8	3/4	1/2
2T-30"	30	27 1/2	9	9	2 7/8	3/4	1/2
3-21"	21	18 1/2	12	7 1/2	3 3/4	3/4	1/2
3-22"	22	19 1/2	15	7 1/2	4	1	3/4
3-27"	27	24 1/2	15	7 1/2	4	1	3/4
3-29"	29	26 1/2	19	7 1/2	4	1	3/4
3-32"	32	29 1/2	19	7 1/2	4	1	3/4

A wood form can now be built around the edge of the baseplate to contain the grout. The top of the rough concrete foundation should be wetted down prior to grouting. A good grade of non-shrinking grout can now be packed through the open end of the fiberglass baseplate. Once the grout has fully hardened, usually about 48 hours after pouring, the foundation bolts can be fully tightened.

FIGURE 2

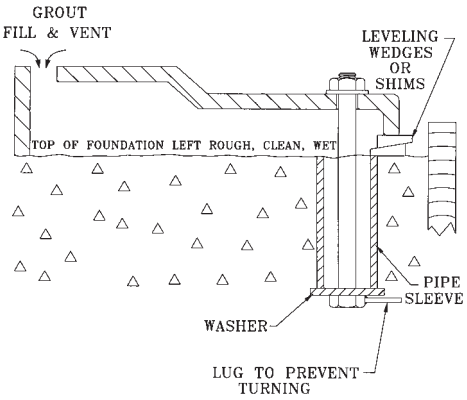

PIPING THE PUMP

All flanged connections to the pump should be full flat face with full contact gaskets. Raised face flanges or partial contact gaskets should not be used as excessive strains can be applied to the pump flanges upon tightening.

The pump has been designed with all necessary strength factors for long, reliable service life. However, due to the composite construction, care must be taken during installation to avoid unnecessary pipe strain. If severe piping strains are to be encountered, flexible connections are recommended in the suction and discharge pipe lines. When lined piping is used, flange alignment should be carefully checked. Spacer ring gaskets are recommended to assure parallel alignment of pipe and pump flanges. The following flange bolt torque values should be used:

Flange Size	Bolt Torque
1"	9-12 ft-lbs.
1 1/2"	9-12 ft-lbs.
2"	18-24 ft-lbs.
3"	23-30 ft-lbs.
4"	27-36 ft-lbs.
6"	35-50 ft-lbs.

All piping must be supported independently of the pump. The piping should always line up naturally with the pump flanges. Never draw the piping to the suction or discharge flanges of the pump. Outside installations should be properly compensated for changes in ambient temperatures. Refer to pipe manufacturers standards for proper installation. Omission of this could result in severe strain transmitted to the pump flanges.

The piping should be as short and direct as possible. Avoid all unnecessary elbows, bends and fittings, as they increase friction losses in the piping.

SUCTION PIPING

A) To minimize friction loss, the length of the suction pipe (from process to pump inlet) should be as short as possible. It is important that NPSH available to the pump is greater than the NPSH required by the pump, long suction runs greatly affect NPSH and should be considered carefully. See pump performance curve for NPSH requirements.

B) The diameter of the suction pipe should be as large as the pump suction. If long suction runs are encountered, the suction pipe diameter should be increased to reduce the NPSH required.

C) Increasers or reducers, if used, should be eccentric and installed with the eccentric side on the bottom of the pipe to prevent air traps.

D) Elbows, fittings, valves or expansion joints should be avoided at the suction flange. Allow a straight run of at least 10 pipe diameters into the suction of the pump.

E) If a valve is to be installed in the suction piping, only full flow valves offering a minimum flow disturbance should be used (ball, plug types). These valves should be for shut-off only when the pump is not running, and not for throttling or controlling flow. Centrifugal pumps should never be throttled on the suction side.

F) Provisions for a suction pressure gauge should be included.

DISCHARGE PIPING

A) Installation of a valve in the discharge line that can be used as a block for inspection and maintenance is recommended. It should be of a design to allow throttling or flow control.

B) The diameter of the discharge pipe should be as large or larger than the pump discharge.

C) Provision for a discharge pressure gauge should be included.

ANCILLARY PIPING

A) The diameter of the ancillary or seal piping should be large enough to meet the seal flushing requirements. Typically this is 1/4-1/2 GPM at a pressure of 15-25 PSI above the suction pressure for most mechanical seals. Refer to pages 25 and 26 for recommended seal flush flow rates and piping installations.

B) Where the ancillary piping is connected to the pump only plastic fittings shall be used.

WARNING: FAILURE TO USE PLASTIC FITTINGS MAY RESULT IN DAMAGE TO THE PUMP.

C) Many modern flush systems incorporate electrically actuated solenoid valves to conserve and control the flow of flush liquids, ensure that the flush liquid is flowing to the seal before the pump is started.

D) On double seal arrangements with flush in and flush out connections, flow control valves should be installed in the flush out or downstream side.

The pump shaft should turn freely by hand after the piping has been connected to the pump. This is to insure that the piping has not caused binding in the pump. If binding occurs, check for cause and correct.

ELECTRICAL CONNECTIONS

A) All electrical work done to the unit should be done by a qualified electrician. All local, state and federal electrical codes should be adhered to.

B) Wire motor according to motor manufacturers instructions. Ensure that all connections and covers are tight and that proper sized wire and switch-gear are used.

C) All pumps operate in a clockwise direction when viewed from the motor end, (see direction arrow on the pump motor adapter). Connect electric motor to power supply and jog motor to check rotation. If motor is operating in wrong direction, reverse leads and recheck.

WARNING: DO NOT START PUMP WITH LIQUID IN THE CASING UNTIL MOTOR ROTATION HAS BEEN DETERMINED AS DAMAGE COULD RESULT FROM SUSTAINED REVERSE ROTATION UNDER PUMPING LOAD.

START-UP AND OPERATING PROCEDURES

LUBRICATION

On a close coupled pump only the motor requires lubrication. Since all motors come from the factory pre-lubricated there is no action required.

SEAL FLUSHING

Mechanical Seals

Do not operate the pumps without liquid to the mechanical seal. Depending on the flush arrangement of the pump, the fluid to the seal may be piped from the pump discharge externally or internally, or from an external clean source. If the pump is fitted with an internal or bypass flush arrangement, then the pump must be flooded with liquid prior to starting to ensure that the mechanical seal is lubricated. If the pump is equipped for an external flush system, then flush liquid must be supplied to the seal prior to starting. Proper flow for external flushing will vary from 1/4 to 1/2 GPM at a pressure of 15 to 25 PSI above the stuffing box pressure.

PRIMING

Suction valve must be fully open. The pump casing and suction pipe must always be full of liquid before the pump is started. Centerline discharge designs are self-venting therefore the discharge valve should be opened to release any air trapped in the pump and then left slightly open at start-up.

STARTING

Prior to starting, turn pump shaft by hand to be sure rotating elements are free. If it rubs or binds:

A Check for piping strains on casing flanges, or other loads on casing.

B) Check impeller clearance. (See impeller adjustment).

Prior to starting pump recheck installation procedures with the operational start-up checklist found on page 14 of this manual.

Start pump and bring up to speed, open discharge valve to the rated flow.

WARNING: DO NOT RUN PUMP WITH A CLOSED DISCHARGE VALVE AS THE LIQUID IN THE PUMP WILL RAPIDLY INCREASE IN TEMPERATURE, POSSIBLY CAUSING DAMAGE TO PUMP.

Check flush water to mechanical seal, if not lubricated from the pump discharge.

OPERATIONAL CHECK LIST

A) Periodically check mechanical seals for proper operation.

B) Periodically check lubrication to the motor bearings.

C) Periodically check for excessive vibrations. Correct if necessary.

MAINTENANCE

Fybroc pumps are designed for a long service life. The only scheduled maintenance items are the lubrication intervals for the motor. Please refer to the lubrication procedures given below.

MOTOR

The motor relubrication intervals are greatly influenced by the environment it is in and the length of time it runs. Refer to the following chart for typical relubrication values for motors. Standard duty is when the motor is operated eight hours a day and the environment is free from dust. Severe duty is when the motor runs twenty-four hours per day with exposure to dirt and dust.

Sync RPM Range	Motor Frame Range	Type of Service	
		Standard Duty	Severe Duty
3600	143JM - 256JM	5 Yrs	3 Yrs
	284JM - 286JM	1 Yr	4 Mos
	324JM - 365JM	9 Mos	3 Mos
1800	143JM - 256JM	7 Yrs	3 Yrs
	284JM - 326JM	4 Yrs	1.5 Yrs
	364JM - 365JM	2.5 Yrs	10 Mos
1200	143JM - 256JM	7 Yrs	3 Yrs
	284JM - 326JM	4 Yrs	1.5 Yrs
	364JM - 447JM	3 Yrs	1 Yr

Instructions For Lubricating Motors

Before greasing, be sure fittings are clean and free from dirt. Remove grease relief plug or plate and using a low pressure grease gun pump in the required grease. Do not over-grease. After re-lubricating allow motor to run for an hour before replacing relief hardware.

TROUBLE CHECK LIST

Refer to the following diagnostic section if hydraulic problems are encountered in the pump operation.

PROBLEM: Not enough liquid, or no liquid delivered.

CHECK: Suction pipe and /or pump casing not filled with liquid.

Speed too low. (Result, reduced TDH).

Suction lift too high or insufficient NPSHA. (Cavitation).

Impeller or suction pipe plugged with solids.

Wrong rotation. (Result, reduced TDH).

Air pockets in suction line or air leaking in through packing box area.

Suction strainer plugged, if used in suction line.

PROBLEM: Not enough pressure.

CHECK: Speed too low.

Air or gases in the liquid.

Check impeller diameter.

Mechanical defects (impeller clearance too great; impeller damaged).

Wrong rotation.

Pressure gauge in a poor location.

PROBLEM: Pump runs but intermittently pumps liquid.

CHECK: Suction line leaks.

Stuffing box leakage of air.

Air pocket in suction line. Insufficient NPSH.

Air or gases in liquid.

PROBLEM: Pump takes to much power.

CHECK: Speed too high.

Head lower than rating; pumping beyond design point.

Liquid heavier than specified; check viscosity and specific gravity.

Mechanical defects (Bent shaft, rotating element binds, packing too tight, misalignment).

ASSEMBLY/DISASSEMBLY PROCEDURES FOR HORIZONTAL PUMPS

GENERAL

The Fybroc pump is designed for easy inspection and service because of its back pullout construction. For inspection or replacement of certain parts, the work can be done in place, without the necessity to remove the complete pump to a maintenance area. Refer to applicable Sectional Drawing in this manual for item numbers mentioned below.

Before any work is done the following procedures and precautions should be taken:

1) The electric motor should be either disconnected from its power source, or the switch or circuit breaker must be secured in an "off" position so that the motor cannot be accidentally started.
2) Depending upon the fluid being pumped, the proper protective equipment should be worn (gloves, mask, respirator, goggles or safety glasses, etc.) to prevent contact with the fluid in the pump or pipelines.
3) Check the valves on the suction and discharge lines to be sure they are closed and secured.
4) If the mechanical seal is flushed from an external source, turn off the valve in the supply line and disconnect the flush line.
5) The liquid trapped in the pump and piping should be drained. Care should be taken to either trap the fluid in a container or to divert it to a proper disposal area so that the area around the pump and base will not be contaminated.

DISASSEMBLY

1) If the complete pump is to be removed to a maintenance area, remove the bolts holding the motor and casing to the baseplate. Remove the bolts on the suction and discharge flange connections. Now the whole pump can be removed. If the casing is to be left in place remove the screws holding the motor to the baseplate and then remove the casing bolts, nuts, washers and shims securing the casing to the cover and motor adapter (Items 1C, 1D, 1E, 67). Now the rotating assembly can be pulled away from the casing and removed. Note the number of shims removed. Two jackscrews (Item 19D) are provided to ease disassembly.
2) If the casing was removed with the pump, remove the casing bolts, nuts, washers and shims securing the casing to the cover and frame adapter (Items 1C, 1D, 1E, 67). The rotating assembly can be pulled away from casing. Note the number of shims that were removed. Two jackscrews (Item 19D) are provided to ease disassembly. Now the pump can be placed in a convenient location to disassemble it.
3) Remove the cover o-ring (Item 73) and place in a container with the casing hardware.
4) To disassemble the impeller assembly, remove the locking ring (Item 14 B) by removing the two Allen head screws, thus exposing the segment key (Item 14A), which can now be removed from the impeller sleeve.
5) If the pump is provided with a mechanical seal utilizing set screws to drive the seal, loosen the set screws. If the mechanical seal is of the preset outside type, reinstall the seal setting clips, prior to loosening the set screws.
6) Remove rear fan cover from motor; use vise grips or pipe wrench to hold rear motor shaft extension from turning. Remove fan if required. Do not attempt to hold fan. The impeller assembly can now be removed by turning the impeller in a counter-clockwise direction facing the impeller. A strap wrench or similar device may be required to disengage the screw threads. The impeller, stuffing box cover, and seal can now be removed as a unit.
7) If the mechanical seal is a single outside seal be sure the set screws are loose and pull the rotary seal assembly off the sleeve, using a twisting motion as it is removed. The impeller (Item 2) can be removed from the cover. Remove the four bolts and washers (Item 17C, 17E) securing the gland (Item 17) to the cover (Item 11) and remove the gland and then the seal stationary from the cover. The carbon and ceramic elements of the seal should be handled carefully to prevent chipping or scratching.

If the mechanical seal is a double inside seal, remove the four bolts and washers (Item 17C, 17E) securing the gland (Item 17) to the cover (Item 11) and remove the gland. Be sure the set screws are loose, and pull the rotary seal assembly off, using a twisting motion as it is removed. The impeller (Item 2) can be removed from the cover. Next remove the stationary seal faces from the gland and cover by gently pressing them out using your thumbs. The carbon and ceramic elements of the seal should be handled carefully to prevent chipping or scratching.

8) The motor shaft adapter (Item 6) may be removed from the motor shaft by removing the Allen head screw (Item 6A). The drive key (Item 46) will slide off with the shaft adapter. In the bore of the shaft adapter there may be some shims to take up the motor manufacturer's shaft length tolerances. Be sure to note the number and thickness of the shims used.

9) Remove pump adapter (Item 71) and motor adapter (Item 71B) if provided.

ASSEMBLY

1) Inspect casing, cover and impeller for any damage and make sure all sealing surfaces are free of dirt and scratches. If pump is equipped with an internal seal flush, make sure cover flush hole is clear. Check motor end float. Excessive shaft end float (greater than .015") can result in damage to pump and or mechanical seal.

2) If equipped install the motor adapter (Item 71B). Ensure that the adapter is seated squarely on the motor before tightening adapter screws, this may require some sanding of the paint on the pilot diameters. Secure with adapter screws (Item 71C), torque to 25 ft-lbs.

3) Install the pump adapter (Item 71). Ensure that the adapter is seated squarely on the motor adapter or motor before tightening adapter screws, this may require some sanding of the paint on the pilot diameters. Secure with adapter screws (Item 71A), torque to 25 ft-lbs. end of shaft.

4) Place one .062" shim washer (Item 6B) in the shaft (Item 6) bore. Install key (Item 46) into the shaft key-way slot from the inside of the shaft bore. Slide assembly onto motor shaft and temporarily secure with shaft screw (Item 6A).

5) Place six impeller adjusting shims (Item 67, three on each side) and the cover (Item 11) on to the pump adapter. Ensure that the cover is seated squarely on the pump adapter, this may require some sanding of the paint on the pilot diameter. Clamp the cover tightly to the adapter with clamps or bolts.

6) Thread the impeller (Item 2) onto the shaft adapter until it bottoms on the shoulder of the shaft adapter. Place a feeler gauge between the cover and the balance vanes on the impeller.

7) The gauge should read approximately .035", if it does not, repeat steps 4-6 using a different washer or combination of washers until the proper clearance is obtained. Four washers are supplied by Fybroc: 2@.010", 1@.032" and 1@.062" this will provide for 0-.110" worth of shimming capabilities which will adapt to any motor used.

8) Once the proper number of shims is determined, remove the impeller, cover and plastic shims and tighten the shaft adapter screw to 35 ft-lbs. for 3/8" screws and 50 ft-lbs. for 1/2" screws.

9) Place some anti-seize lubricant on the shaft adapter impeller threads.

10) The Fybroc pump, as standard, is equipped with a single outside seal with stationary seal face and rotating compression unit, or a double inside seal with stationary seal faces and rotating double seal compression unit. The following installation instructions are based on these seal types. When other types of seals are used, please refer to the manufacturer's installation data. Determine the type of seal being used and refer to the following sections.

SINGLE OUTSIDE SEAL INSTALLATION JOHN CRANE TYPE 8B2

1) Remove the mechanical seal from its packaging, inspect for any damage, and keep seal faces clean and free from contaminants during installation. **DO NOT GREASE OR LUBRICATE SEAL FACES.**

2) Install the inboard stationary gasket and the stationary seal insert into their bores on the pump cover. Then place the outboard stationary gasket over the stationary insert. Next place the seal gland over the stationary insert and gaskets, making sure that all the gaskets have been installed properly before securing the gland bolts. Be sure that the gland pilot is properly engaged, and draw up the gland bolts evenly, cross staggering adjustment of the bolts. Proper gland bolt adjustment is especially important where clamp style inserts are used. The gland bolts should be torqued to a maximum of 10 ft/lbs.

3) Lightly coat the impeller sleeve with a suitable lubricant. Carefully slide impeller sleeve through the cover, being careful not to chip the stationary sealing face.

4) Lubricate the rotary unit o-ring with a suitable lubricant. Then engage the rotary assembly over the impeller sleeve. Use a slight twisting motion as the rotary unit is slid down the impeller sleeve until it touches the stationary sealing face. Do not tighten set screws or remove setting clips.

5) Mount the impeller, cover and seal assembly onto the pump adapter, making sure the impeller threads are firmly bottomed on the shaft threads. Install the cover shims (Item 67) between the pump adapter and cover.

6) Install the segment key (Item 14A) in the corresponding slot at the rear of the impeller sleeve. Make sure the teeth are properly engaged and install locking ring (Item 14B).

7) Install cover o-ring (Item 73), casing (Item 1) and secure with the casing bolts, nuts and washers (Items 1C, 1D, 1E). Make sure the o-ring is in place and that the impeller is not contacting the casing and tighten the casing bolts.

8) Rotate the motor shaft manually while pushing on the motor shaft to take up any shaft end float. Confirm no binding exists. Ensure that the seal faces are still contacting by sliding the seal rotary unit until it touches the stationary unit with a slight twisting motion. Tighten the rotary unit set screws and remove the setting clips.

9) Replace fan and/or fan cover on motor and make appropriate piping connections to the seal assembly.

DOUBLE SEAL INSTALLATION JOHN CRANE TYPE 8-1T

1) Remove the mechanical seal from its packaging, inspect for any damage, keep seal faces clean and free from contaminants during installation. **DO NOT GREASE OR LUBRICATE SEAL FACES.**

2) Lightly lubricate the inboard stationary insert o-ring and cover bore with a suitable lubricant and then install the inboard stationary into the pump cover bore.

3) Lightly lubricate the outboard stationary insert o-ring and gland bore and then install the outboard stationary into the gland bore.

4) Lightly coat the impeller sleeve with a suitable lubricant. Carefully slide impeller sleeve through the cover, being careful not to chip the stationary sealing face.

5) Lubricate the rotary unit o-rings with a suitable lubricant. Then engage the rotary assembly over the impeller sleeve. Use a slight twisting motion as the rotary unit is slid down the impeller sleeve until it touches the stationary sealing face. Do not tighten set screws.

6) Install the gland o-ring into its groove on the gland. Then place the gland over the rotating seal assembly, making sure the gland o-ring is in place before securing the gland bolts. Be sure that the gland pilot is properly engaged, and draw up the gland bolts evenly, cross staggering adjustment of the bolts. The gland bolts should be torqued to a maximum of 10 ft/lbs.

7) Mount the impeller, cover and seal assembly onto the pump adapter, making sure the impeller threads are firmly bottomed on the shaft threads. Install the cover shims (Item 67) between the pump adapter and cover.

8) Install the segment key (Item 14A) in the corresponding slot at the rear of the impeller sleeve. Make sure the teeth are properly engaged and install locking ring (Item 14B).

9) Install the cover o-ring (Item 73), casing (Item 1) and secure it with the casing bolts, nuts and washers (Items 1C, 1D, 1E). Make sure the o-ring is in place and that the impeller is not contacting the casing and tighten the casing bolts.

10) Rotate the motor shaft manually while pushing on the motor shaft to take up any shaft end float. Confirm no binding exists. Remove the pipe plug in the bottom of the gland and tighten the seal rotary assembly set screws, centering the set screws with the pipe plug hole. Replace pipe plug and make appropriate piping connections to the seal assembly.

11) Replace fan and or fan cover on motor, make appropriate piping connections to the seal assembly.

DOUBLE SEAL INSTALLATION JOHN CRANE TYPE 8-D

1) Remove the mechanical seal from its packaging, inspect for any damage, keep seal faces clean and free from contaminants during installation. **DO NOT GREASE OR LUBRICATE SEAL FACES.**

2) Lightly lubricate the inboard stationary insert o-ring and cover bore and install the inboard stationary into the pump cover bore.

3) Lightly lubricate the outboard stationary insert o-ring and gland bore and install the outboard stationary into the gland bore.

4) Lightly coat the impeller sleeve with a soapy water solution. Carefully slide impeller sleeve through the cover, being careful not to chip the stationary sealing face.

   NOTE: The John Crane 8-D is a friction drive type of seal, the impeller sleeve and rotary unit should be lubricated with a soapy water solution to ease installation without reducing the frictional drive of the rotary unit.

5) Lubricate the rotary unit o-rings with a soapy water solution. Then engage the rotary assembly over the impeller sleeve. Use a slight twisting motion as the rotary unit is slid down the impeller sleeve until it touches the stationary sealing face.

6) Install the gland o-ring into its groove on the gland. Then place the gland over the rotating seal assembly, making sure the gland o-ring is in place before securing the gland bolts. Be sure that the gland pilot is properly engaged, and draw up the gland bolts evenly, cross staggering adjustment of the bolts. The gland bolts should be torqued to a maximum of 10 ft/lbs.

7) Mount the impeller cover, and seal assembly onto the power frame, making sure the impeller threads are firmly bottomed on the shaft threads. Install the cover shims (Item 67) between the pump adapter and cover.

8) Install the segment key (Item 14A) in the corresponding slot at the rear of the impeller sleeve. Make sure the teeth are properly engaged and install locking ring (Item 14B).

9) Install cover o-ring (Item 73), casing (Item 1) and secure with the casing bolts, nuts and washers (Items 1C, 1D, 1E). Make sure the o-ring is in place and that the impeller is not contacting the casing and tighten the casing bolts.

10 Rotate the motor shaft manually while pushing on the motor shaft to take up any shaft end float. Confirm no binding exists.

11) Replace fan and or fan cover on motor.

12) The 8-D seal is self centering and requires no adjustment. Make appropriate piping connections to the seal assembly.

IMPELLER ADJUSTMENT

The close coupled 1530 series design allows adjustment of the impeller clearance between the pump casing wall and the impeller face. The pump impeller is adjusted at the factory during assembly and should not require further adjustment upon installation.

Impeller adjustment will be required when a drop in head and/or capacity indicates a change in clearances, or when existing components of the pump are replaced. Refer to the following table for recommended clearance when adjusting impeller on horizontal pumps.

Impeller Diameter	Clearance
Up to 8"	.015"
8" to 10"	.020"
10" to 13"	.025"

1) When existing components of the pump are replaced with the exception of the casing, refer to the assembly section of this manual for proper impeller adjustment.
2) For impeller adjustment to compensate for wear follow the procedure below.
   A) Lock out the switch or circuit breaker in the “OFF” position so that the motor cannot be accidentally started.
   B) Loosen set screws or other holding devices if so provided on mechanical seals before adjusting impeller to prevent seal face damage.
   C) Loosen bolts holding motor to base and loosen casing bolts (Item 1D). Remove fan guard.
   D) Remove one shim (Item 67) from each side of pump by pulling outward on the extended tabs; this will decrease the impeller front clearance by .010". Slowly retighten casing bolts while turning and pushing forward on the motor shaft to be sure no binding occurs. If binding occurs from the impeller rubbing the casing, the shims that were removed will have to be replaced
   E) Continue this procedure until the impeller starts to contact the casing. At this point replace the appropriate number of shims to obtain the approximate impeller clearance shown in the table above.
   F) Reset and tighten the mechanical seal per the seal manufacturers instructions and retighten the motor mounting bolts. Replace fan guard.

WARNING: SOME MOTORS HAVE END FLOAT IN THE SHAFT. THIS MUST BE COMPENSATED FOR OR THE AXIAL LOADS DEVELOPED WHEN THE PUMP IS RUNNING WILL PULL THE IMPELLER INTO THE CASING, CAUSING PUMP DAMAGE.

OPERATIONAL START-UP CHECKLIST

- ☐ Foundation level and baseplate grouted.
- ☐ Foundation bolts tight.
- ☐ Motor and pump mounting bolts tight.
- ☐ Suction and discharge connections secure.
- ☐ Flush piping installed if required.
- ☐ Electrical connections secure and covered.
- ☐ Turn motor shaft by hand, ensure that it does not bind.
- ☐ Jog motor/Check rotation.
- ☐ Ensure seal is properly flushed.
- ☐ Suction valve is open, Discharge valve is slightly open.
- ☐ Ensure that pump is primed.
- ☐ Start pump and open discharge valve to desired flow rate.
- ☐ Check flush water flow and pressure.
- ☐ Check for excessive vibration.
- ☐ Check mechanical seal for no leaks after run-in.

1530 SERIES GROUP 1

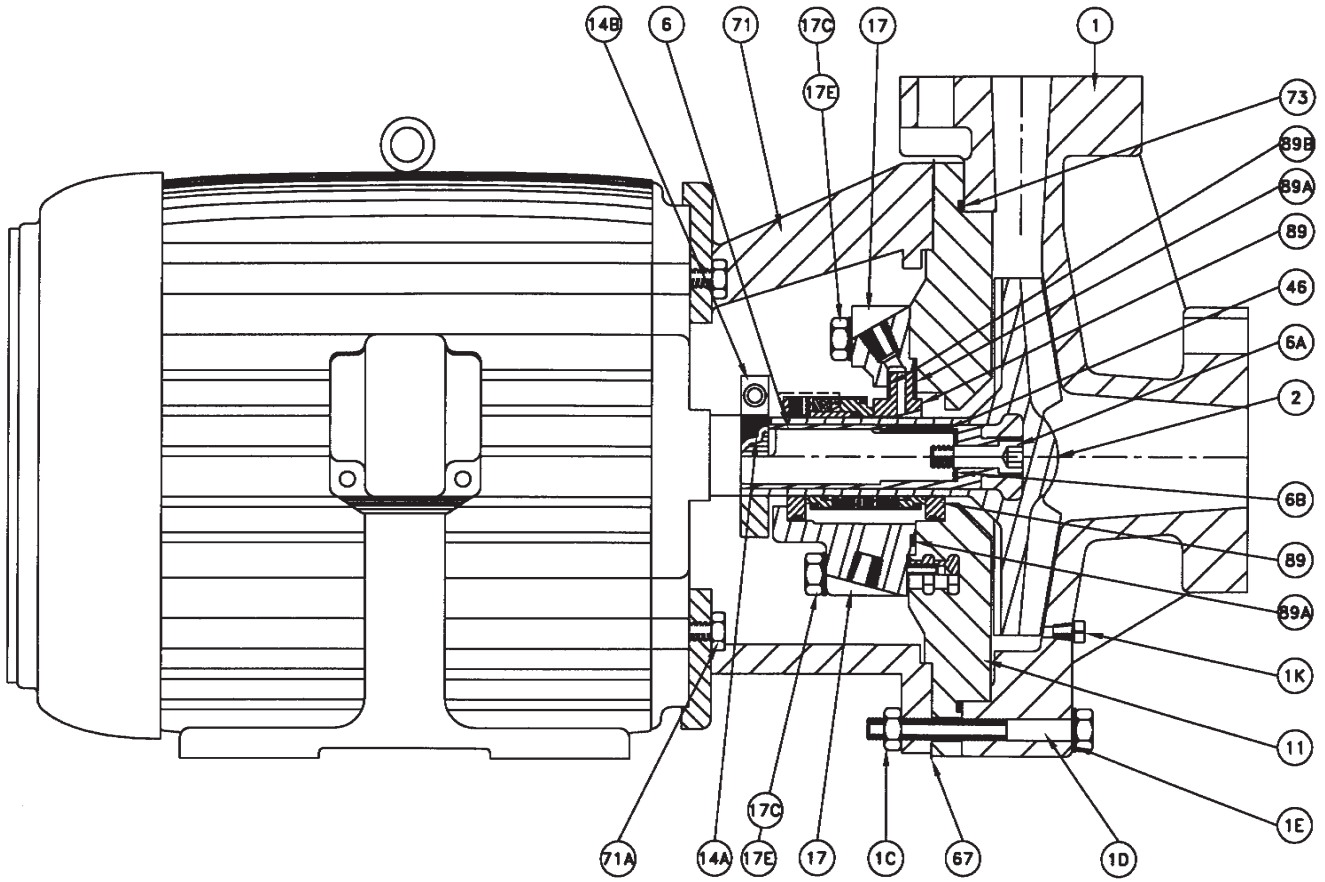

PART #	DESCRIPTION	QTY.
1	CASING	1
1C	CASING NUT	6
1D	CASING BOLT	6
1E	CASING WASHER	6
1K	DRAIN PLUG (opt.)	1
2	IMPELLER	1
6	SHAFT	1
6A	SHAFT SCREW	1
68	SHAFT SHIM	0-4
11	COVER	1
14A	SEGMENT KEY	1
14B	LOCKING RING	1
17	GLAND RING	1
17C	GLAND BOLT	4
17E	GLAND WASHER	4
46	KEY	1
67	SHIM (approx.)	12
71	PUMP ADAPTOR	1
71A	ADAPTOR SCREW	4
73	O-RING COVER	1
89	MECHANICAL SEAL	1
89A	GLAND SEAL COVER	1
89B	GLAND SEAL, REAR	1
–	MOTOR, JM FRAME	1

MODELS
1X1-1/2X6
1-1/2X3X6
2X3X6
1X1-1/2X8

1530 SERIES GROUP 2

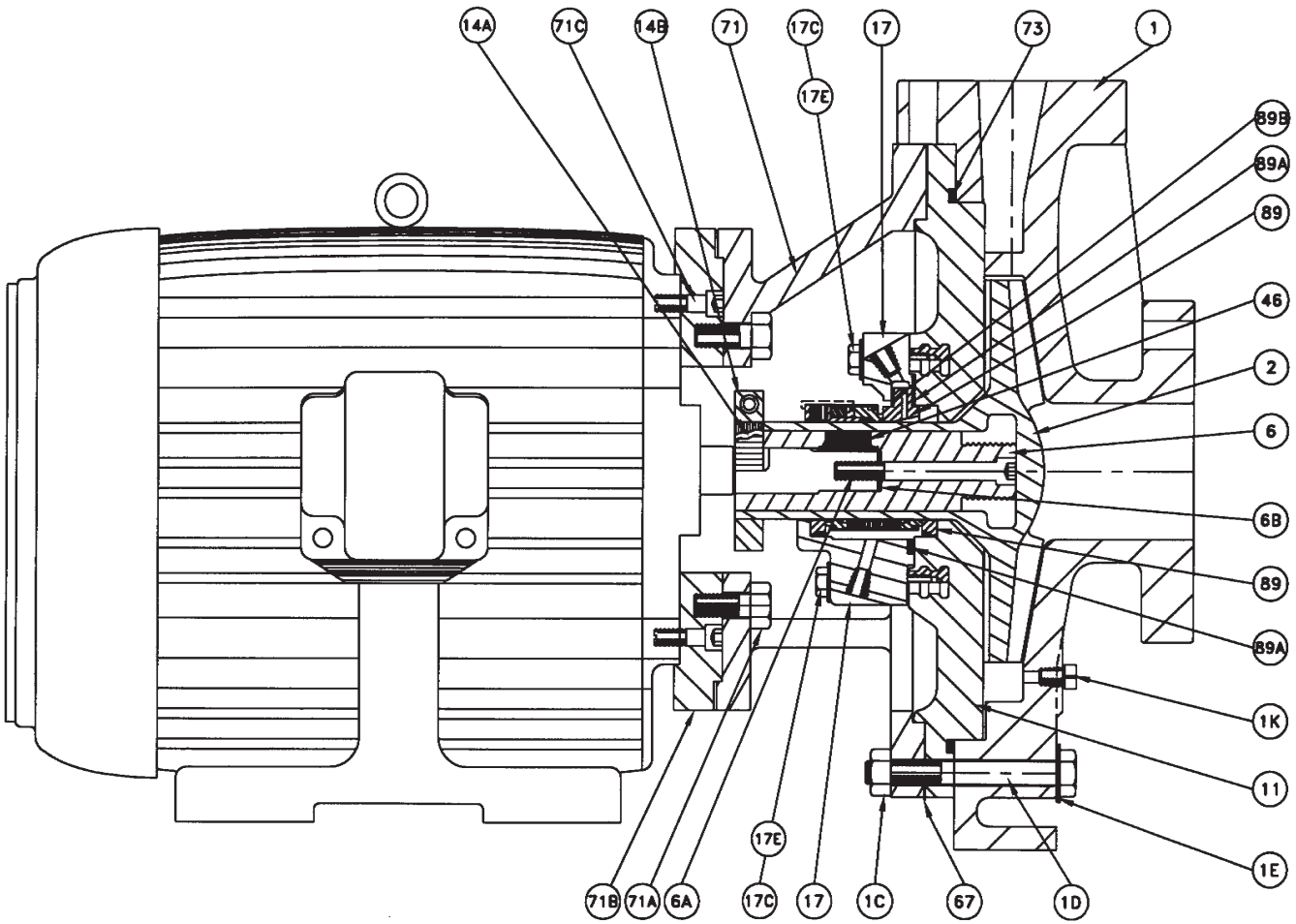

PART #	DESCRIPTION	QTY.
1	CASING	1
1C	CASING NUT	8–16
1D	CASING BOLT	8–16
1E	CASING WASHER	8–16
1K	DRAIN PLUG (opt.)	1
2	IMPELLER	1
6	SHAFT	1
6A	SHAFT SCREW	1
6B	SHAFT SHIM	0–4
11	COVER	1
14A	SEGMENT KEY	1
14B	LOCKING RING	1
17	GLAND RING	1
17C	GLAND BOLT	4
17E	GLAND WASHER	4
46	KEY	1
67	SHIM (approx.)	12
71	PUMP ADAPTOR	1
71A	SCREW, ADAPTOR–PUMP	5
71B	MOTOR ADAPTOR	1
71C	SCREW, ADAPTOR–MOTOR	4
73	O–RING COVER	1
89	MECHANICAL SEAL	1
89A	GLAND SEAL, COVER	1
89B	GLAND SEAL, REAR	1
–	MOTOR, JM FRAME	1

MODELS

1–1/2X3X8	3X4X10
2X3X8	4X4X10
3X4X8	4X6X10
1X2X10	2X3X13
1–1/2X3X10	3X4X13
2X3X10	4X6X13

1530 SERIES SEAL AND STUFFING BOX ARRANGEMENTS

PRODUCT FLUSH: A portion of the pumped fluid is recirculated through the stuffing box to provide lubrication and cooling to the seal. Use plastic fittings only.

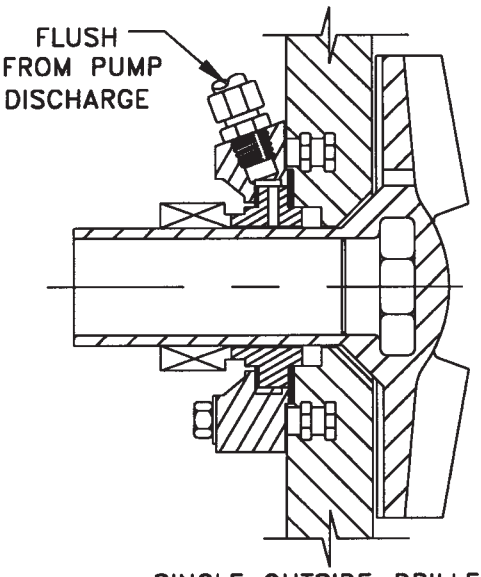

SINGLE OUTSIDE–DRILLED, CLAMPED SEAT WITH CASING BYPASS FLUSH

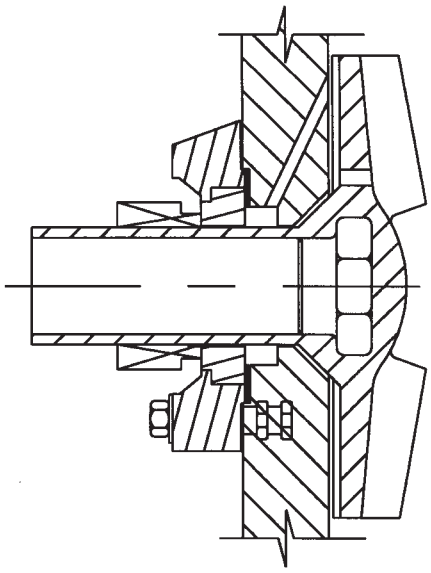

SINGLE OUTSIDE–SOLID CLAMPED SEAT WITH INTERNAL COVER FLUSH

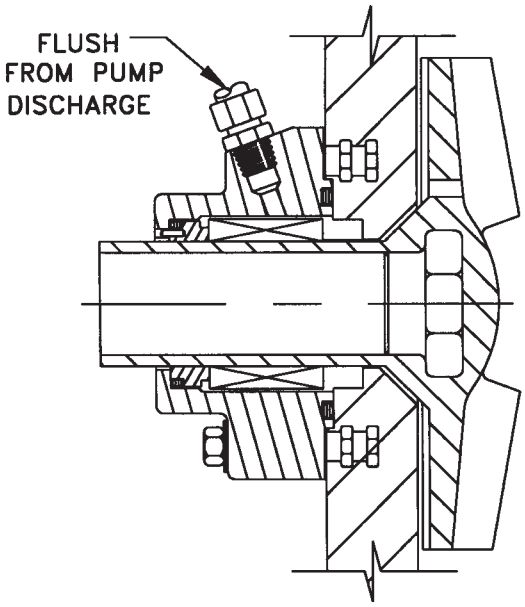

SINGLE INSIDE–SOLID O–RING SEAT WITH CASING BYPASS FLUSH

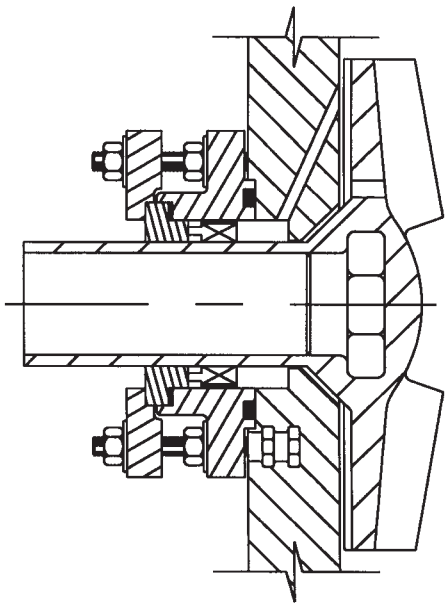

SINGLE INSIDE–SOLID CLAMPED SEAT WITH INTERNAL COVER FLUSH

1530 SERIES SEAL AND STUFFING BOX ARRANGEMENTS

EXTERNAL FLUSH: An external source of clean fluid is required at the stuffing box to provide lubrication and cooling. Use plastic fittings only.

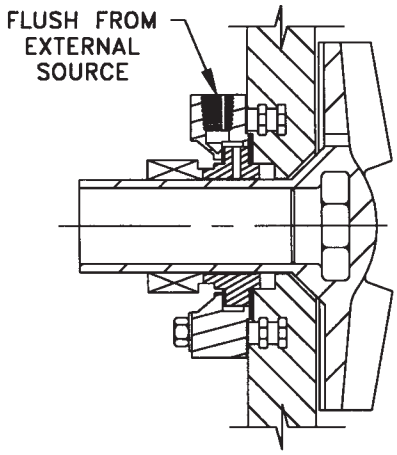

SINGLE OUTSIDE–DRILLED & CLAMPED SEAT W/EXTERNAL FLUSH

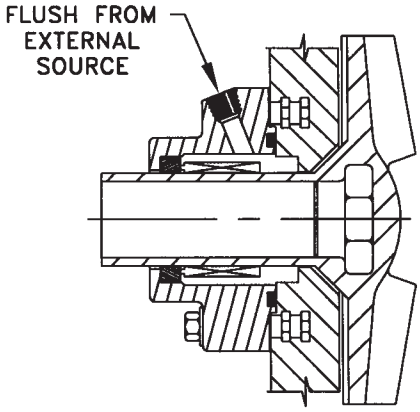

SINGLE INSIDE–SOLID O–RING SEAT W/EXTERNAL FLUSH

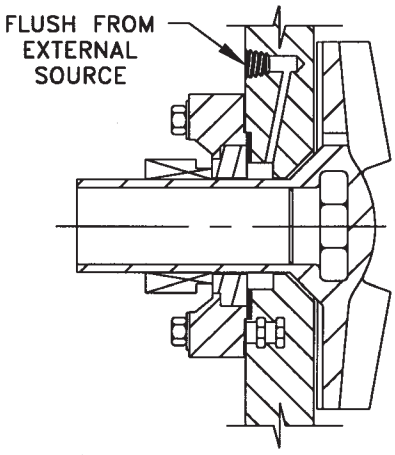

SINGLE OUTSIDE–SOLID CLAMPED SEAT W/EXTERNAL COVER FLUSH

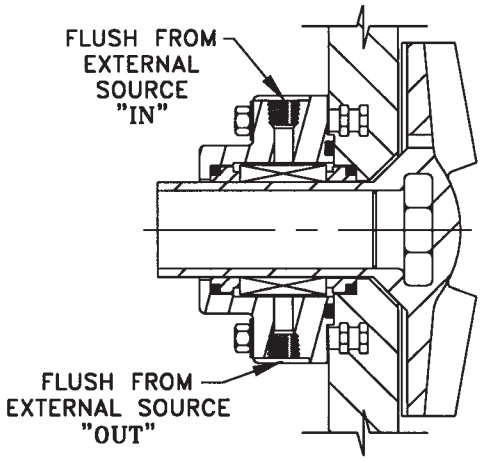

DOUBLE INSIDE W/EXTERNAL FLUSH

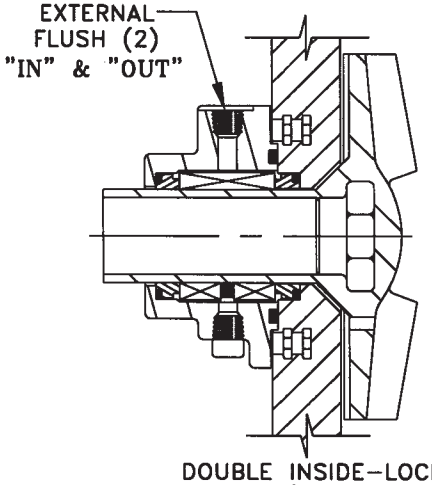

DOUBLE INSIDE–LOCKED ROTARY W/EXTERNAL FLUSH

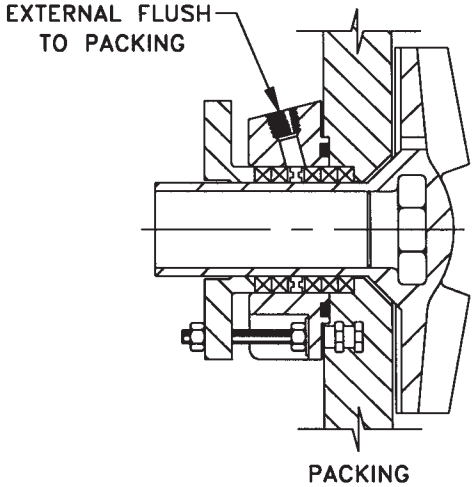

PACKING

FLUSH PIPING FOR SINGLE MECHANICAL SEAL

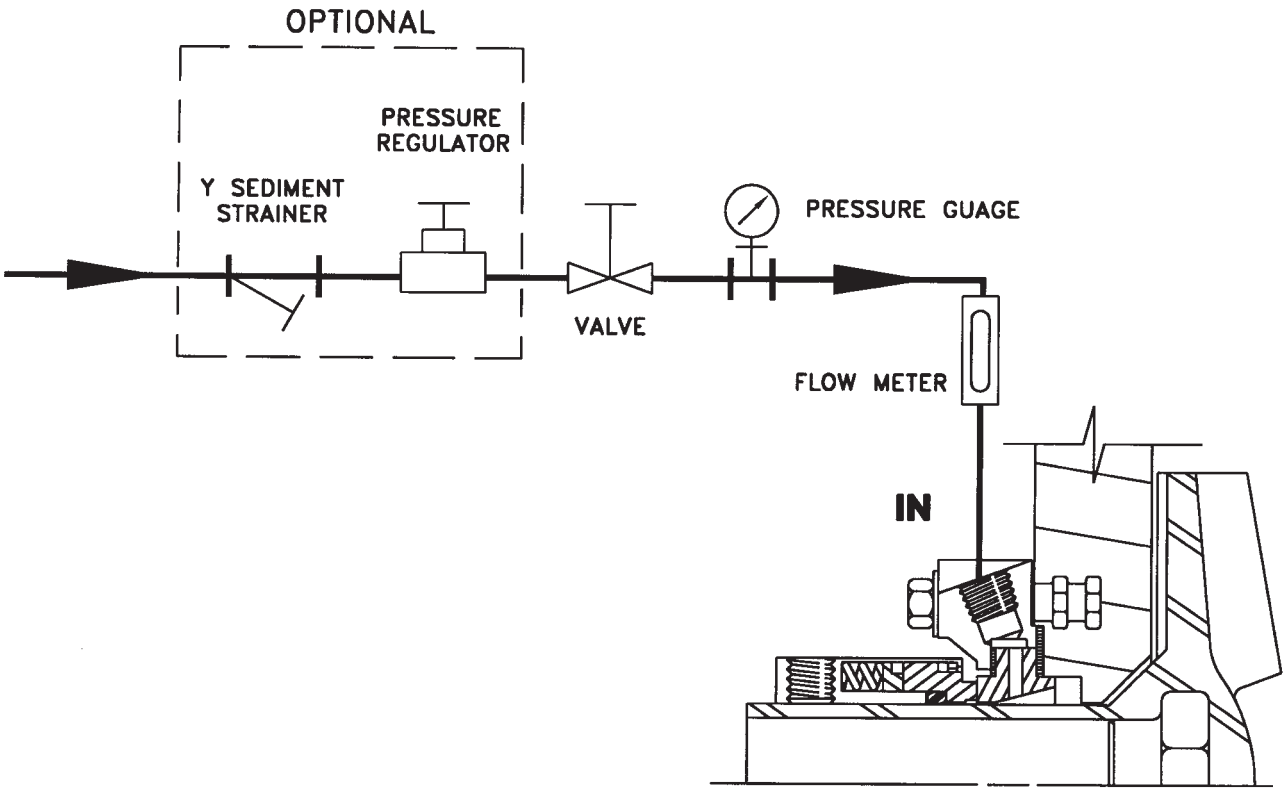

FLUSH FLOW RATE FOR SINGLE SEAL

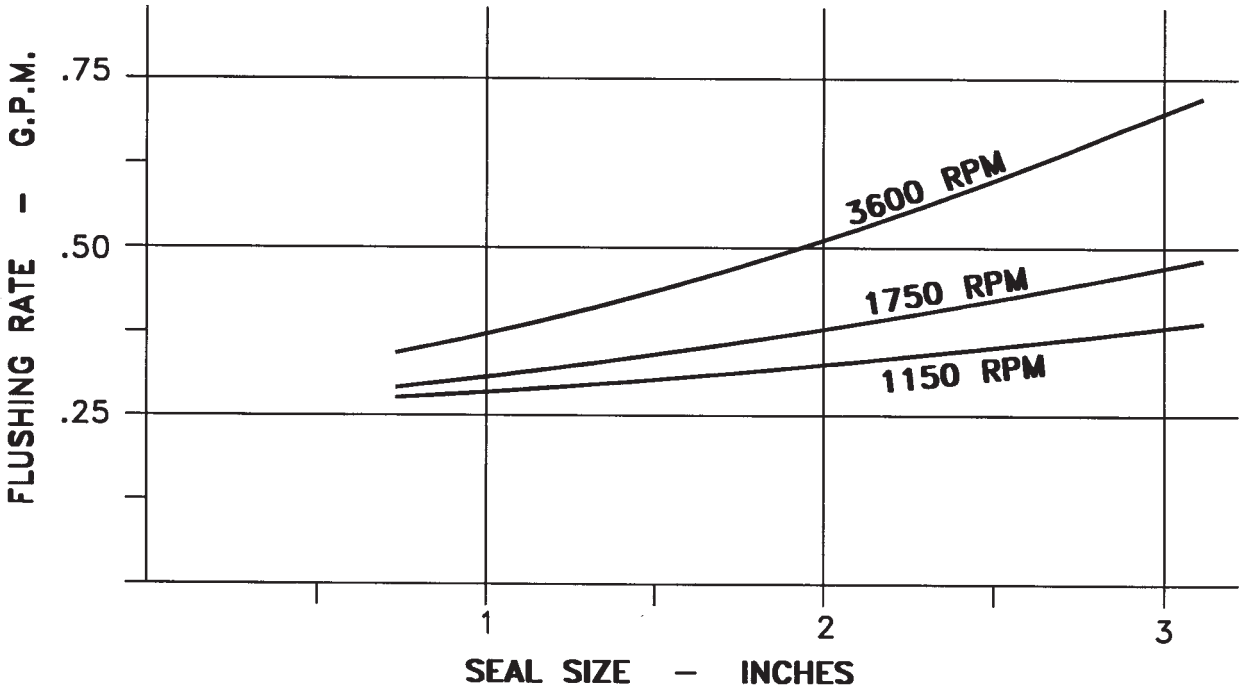

FLUSH PRESSURE – 15 TO 25 PSI ABOVE STUFFING BOX PRESSURE
FLUSH LIQUID TEMPERATURE – 125°F (50°C) MAXIMUM

FLUSH PIPING FOR DOUBLE INSIDE MECHANICAL SEAL

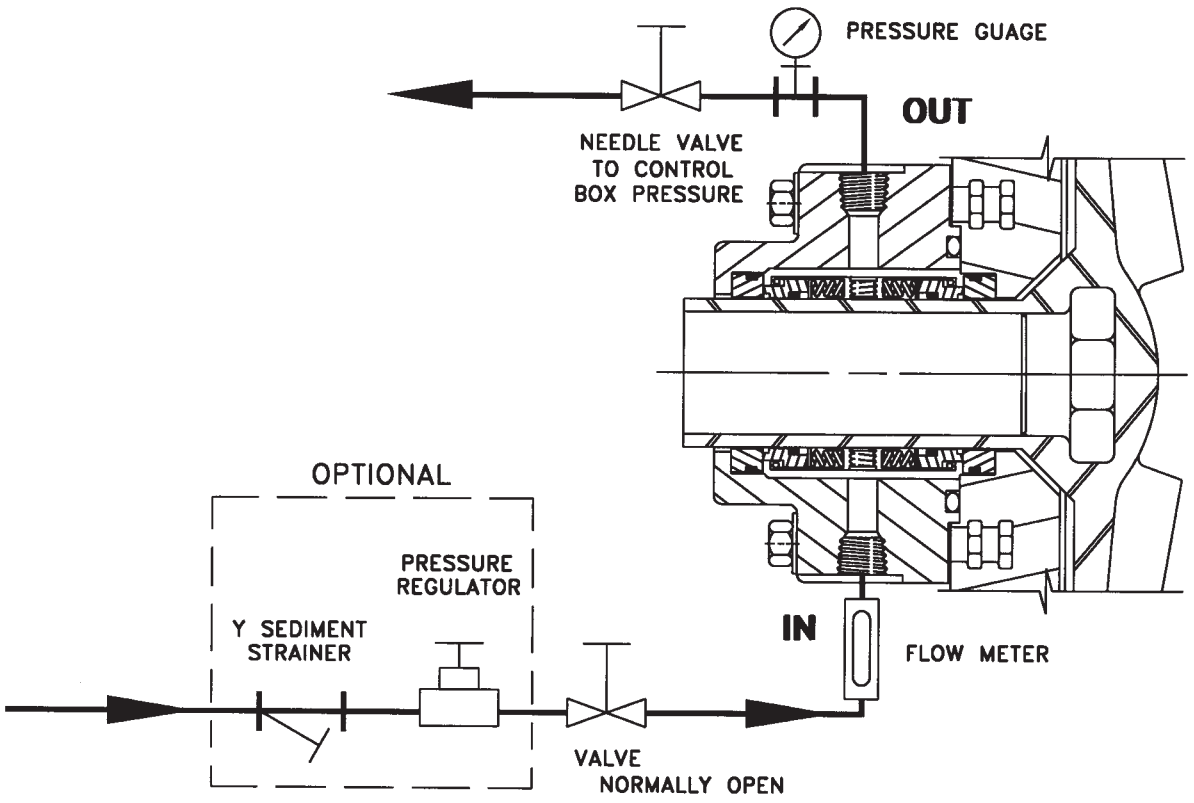

FLUSH FLOW RATE FOR DOUBLE SEAL

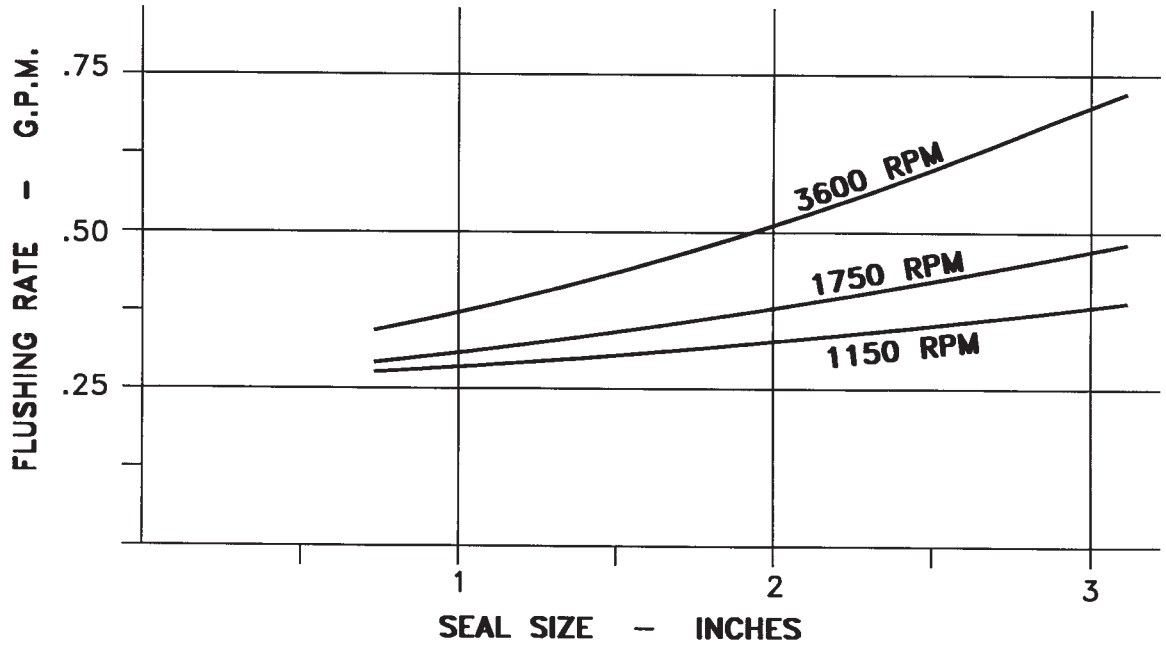

FLUSH PRESSURE – 15 TO 25 PSI ABOVE STUFFING BOX PRESSURE
FLUSH LIQUID TEMPERATURE – 125°F (50°C) MAXIMUM

NOTES

©COPYRIGHT 2012 MET-PRO CORPORATION, FYBROC

FYBROC® IS A REGISTERED TRADEMARK OF MET-PRO CORPORATION.

07-5327 512

MET-PRO
Global Pump Solutions

A Met-Pro Fluid Handling Technologies Business
Combining the Resources of **Dean Pump, Fybroc & Sethco**

American Zoo and Aquarium Association

AALSO

700 Emlen Way • Telford, PA 18969
P: 215.723.8155 • TOLL-FREE: 800.FYBROC.1 • F: 215.723.2197
sales@fybroc.com • www.fybroc.com

MET PRO CORPORATION

Please read and save this Repair Parts Manual. Read this manual and the General Operating Instructions carefully before attempting to assemble, install, operate or maintain the product described. Protect yourself and others by observing all safety information. The Safety Instructions are contained in the General Operating Instructions. Failure to comply with the safety instructions accompanying this product could result in personal injury and/or property damage! Retain instructions for future reference. AMT reserves the right to discontinue any model or change specifications at any time without incurring any obligation.

©2013 American Machine & Tool Co., Inc. of PA, A Subsidiary of The Gorman-Rupp Company, All Rights Reserved.

Periodic maintenance and inspection is required on all pumps to ensure proper operation. Unit must be clear of debris and sediment. Inspect for leaks and loose bolts. Failure to do so voids warranty.

3-Inch Self-Priming Centrifugal Pumps

Refer to pump manual 1808-634-00 for General Operating and Safety Instructions.

DESCRIPTION

These centrifugal pumps are self-priming (to 20 ft. lift) units designed for high volume liquid transfer – irrigation, de-watering, lawn sprinkling, etc. They can also accommodate semi-solids (up to 3/8" diameter), sediment laden liquids and liquids with entrained air or gases. Casing working pressure to 125 psi (862 kPa).

The units are equipped with a cast iron pump casing designed with a full dual volute, clog resistant semi-open stainless steel impeller and a cast iron adapter. Units are equipped with flapper valves to ensure a positive prime. A mechanical seal isolates the motor from the liquid in the pump casing. The units are coupled to 3450 RPM, totally enclosed fan cooled motors. All units are manual models, no controls are supplied. For use with nonflammable, non-abrasive liquids compatible with pump component materials.

⚠WARNING

All units are for use with non-flammable, non-abrasive liquids compatible with pump component materials.

MAINTENANCE

⚠WARNING

Make certain that the unit is disconnected and locked out from the power source before attempting to service or remove any components.

NOTE: Pump casing should be removed and inspected periodically to ensure that any foreign material or rust is not clogging internal pump parts. This unit is equipped with a dual volute pump casing. One of the volutes runs 180 degrees, all the way from side opposite discharge into discharge through a completely enclosed passageway. If foreign material clogs this area, it can be dislodged by using a wire or long spring.

REMOVAL OF OLD SEAL

Refer to Figure 1

IMPORTANT: Always replace both seal seat (Ref. No. 10) and seal head (Ref. No. 11) to ensure proper mating of components! Also, impeller seal washer (Ref. No. 14) should be replaced anytime impeller lock bolt (Ref. No. 15) has been removed.

1. Remove four bolts (Ref. No. 4) that connect adapter (Ref. No. 7) to casing (Ref. No. 16).
2. Remove casing and casing seal (Ref. No. 8).

⚠ CAUTION

Care should be taken not to "pinch" or "shave" the o-ring gasket (Ref. No. 8) between adapter and casing.

3. Using an Allen wrench, remove impeller lock bolt, impeller seal washer,and impeller (Ref. No. 13).

IMPORTANT: Care should be taken to ensure that same number of shim washers (Ref. No. 12) are replaced behind impeller as were removed. These shim washers are located directly behind impeller. These washers as well as impeller key (Ref. No. 2) become loose as impeller is removed.

4. Seal head and shaft sleeve can now be pulled from shaft.
5. Pry seal seat from adapter.
6. Push seal head from shaft sleeve.

INSTALLATION OF NEW SEAL

⚠ CAUTION

The precision lapped faces on mechanical seal are easily damaged. Handle your replacement seal carefully.

1. Thoroughly clean all surfaces of seal seat cavity.
2. Using a clean cloth, wipe shaft and shaft sleeve and make certain that they are perfectly clean.
3. Wet the rubber portion of new seal seat with a light coating of soapy water. While wearing clean gloves or using a clean light rag, press seal seat squarely into adapter recess. Avoid scratching polished surface. If seal will not position properly, place a cardboard washer over polished surface and use a piece of pipe to press in, firmly but gently.
4. Dispose of cardboard washer. Check again to see that polished surface is free of dirt and all other foreign particles and that it has not been scratched or damaged.
5. Wet the inside of rubber portion of new seal head with a light coating of soapy water. Slide head onto shaft sleeve. Slide shaft sleeve with seal head onto motor shaft. Seal head and seal seat will meet. Reinstall any shims which have been removed. (See SHIM ADJUSTMENT section.)

IMPORTANT: Before installing new shaft sleeve, apply a bead of non-hardening, pliable sealant (such as Permatex®, Form-A-Gasket® No. 2) to motor shaft shoulder.

6. Replace impeller key and impeller. Replace impeller seal washer before screwing impeller lock bolt in place.
7. Reassemble pump.
8. A short "run-in" period may be necessary to provide completely leak free seal operation.

3-Inch Self-Priming Centrifugal Pumps

SHIM ADJUSTMENT

When installing a replacement impeller (Ref. No. 13) or motor (Ref. No. 1), it may be necessary to adjust the number of shims (Ref. No. 12) to ensure proper running clearance between impeller and casing (Ref. No. 16). Proceed as follows:

NOTE: A proper running clearance is less than 0.010".

1. For impeller replacement, add one (1) shim in addition to those removed originally.
2. For motor replacement, add two (2) shims in addition to shims removed during disassembly.
3. Reassemble pump as described in steps 6 and 7. (See INSTALLATION OF NEW SEAL section.)

IMPORTANT: Be sure that casing is snugly in place and check shaft to make sure it is turning freely (use screwdriver slot in the motor to turn shaft). If it turns freely, check to ensure that adapter (Ref. No. 7) and casing are fitted metal -to- metal where they meet on outside. If they are not metal-to-metal, tighten fasteners (Ref. No. 4) and recheck shaft for free turning. Tighten carefully, turning shaft while tightening so that motor bearings are not damaged in the event that too many shims were installed. If shaft seizes before fasteners are completely tight, disassembly pump and remove one (1) shim and repeat reassembly.

For Repair Parts contact dealer where pump was purchased.

Please provide following information:
-Model Number
-Serial Number (if any)

Part description and number as shown in parts list

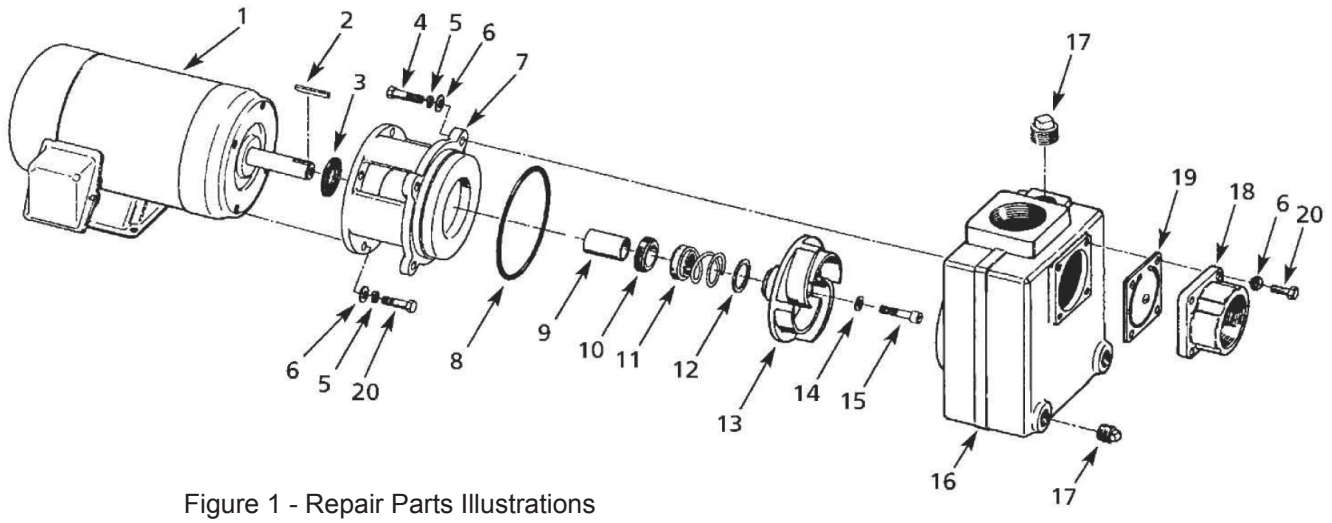

Figure 1 - Repair Parts Illustrations

Repair Parts List

Ref No.	Description	Part Number for Models 3HP 2877-95 2874-95	5HP 2878-95 2875-95	7.5HP 2879-95 2876-95	Qty
1	Motor - 1 Phase TEFC	1626-082-00	1626-078-00	1626-079-00	1
	Motor - 3 Phase TEFC	1626-351-00	1626-352-00	1626-353-00	1
2	Impeller Key	1471-030-00	1471-030-00	1471-030-00	1
3	Slinger Washer	1470-093-00	1470-093-00	1470-093-00	1
4	Fastener	*	*	*	4
5	Washer	*	*	*	8
6	Washer	*	*	*	12
7	Adapter Assembly	1470-001-90	1470-001-90	1470-001-90	1
8	O-Ring & Flapper Valve Kit - Buna	2870-301-91	2870-301-91	2870-301-91	1
	O-Ring & Flapper Valve Kit - Viton (includes Ref. Nos. 8, 14 and 19)	2870-301-92	2870-301-92	2870-301-92	1
9	Shaft Sleeve	1555-140-02	1555-140-02	1555-140-02	1
10 & 11	Seal Assembly Buna (standard)	1640-163-90	1640-163-90	1640-163-90	1
	Seal Assembly Viton (optional)	1640-163-91	1640-163-91	1640-163-91	1
12	Impeller Shim Set	1664-000-90	1664-000-90	1664-000-90	1
13	Impeller Kit (includes Ref. Nos. 13, 14 and 15)	2874-013-90	2875-013-90	2876-013-90	1
14	Impeller Seal Washer	Incl. w/Ref. 8 & 13	Incl. w/Ref. 8 & 13	Incl. w/Ref. 8 & 13	1
15	Impeller Screw	Incl. w/Ref. 13	Incl. w/Ref. 13	Incl. w/Ref. 13	1
16	Casing	1543-003-01	1543-003-01	1543-003-01	1
17	3/4” NPT Pipe Plug	*	*	*	3
18	Suction Plate	1589-000-01	1589-000-01	1589-000-01	1
19	Flapper Valve Assembly	Incl. w/Ref. 8	Incl. w/Ref. 8	Incl. w/Ref. 8	1
20	Screw	*	*	*	8

(*) Standard hardware item, available locally.

American Machine & Tool Co., Inc. of PA
(herein "AMT")
400 Spring Street
Royersford, PA 19468
Phone: (610) 948-3800
Fax: (610) 948-5300
www.amtpump.com

General Information

SALES POLICY: AMT products are sold through our established Distributors. We do not sell direct to the consumer or organization not entitled to trade recognition. Therefore, possession of our catalogs and/or price list(s) does not infer an offer to sell.

MINIMUM ORDER: We appreciate your order, however, all orders are subject to a minimum $35.00 net invoice charge (excluding freight). This applies to all pump and parts purchase orders.

PRICES: Prices are subject to change without notice. All orders accepted are subject to prices in effect at time of shipment.

PAYMENT TERMS: Terms, upon establishment of credit, are Net 30 days. Past due accounts may be subject to a service charge of 1.5% per month. Domestic or assignable letter of credit is required for all export trade.

PAST DUE ACCOUNTS: AMT reserves the right to withhold open account shipments on any past due account. Invoices are considered past due after thirty (30) days. In the interest of sound business, all orders are subject to approval of the Credit Department.

SHIPPING INSTRUCTIONS: All shipments will be made F.O.B. the factory. Where instructions for shipment do not appear on the order, the shipment will be made according to our best judgment. Full risk of loss (including transportation delays and losses) shall pass to the customer upon delivery of the products to the carrier at the F.O.B. point. When loss or delay occurs, primary responsibility for tracing rests with the customer. When there is LOSS or APPARENT VISIBLE DAMAGE to a shipment, when tendered for delivery, *DO NOT* give the carrier a clear receipt. Note such damage on the carrier's delivery receipt and *HAVE THE DRIVER SIGN THE RECEIPT.*

PRODUCT REVISIONS: AMT reserves the right to discontinue, change or improve its products or any portions thereof without being obligated to provide such a change or improvement for units sold and/or shipped prior to such a change or improvement.

LEAD TIME: Products designated "Quick Ship Product", also referred to as "QSP" will normally be shipped within 24 hours of receipt of a non-cancellable purchase order. Only limited quantities of "QSP" pumps are available.

STANDARD LEAD TIME: Lead time is two weeks for all non "QSP" product. AMT reserves the right to revise lead times as required due to availability of materials and all other causes beyond our control.

VIP SHIPMENT: Select AMT and IPT branded pumps are available for next day shipment for non-QSP (Quick Ship Products) items and subjected to a specific model surcharge per unit noted in the respective price book. Requires calling for availability, confirmation and a non-cancellable purchase order or credit card payment prior to shipment. The expedited shipping charges are an additional cost added separately from the VIP charges per item. AMT reserves the right to revise lead times as required due to availability of materials and all other causes beyond our control. QSP quantities are limited as determined by AMT.

ALL purchase orders must be submitted via hard copy sent to AMT customer service department by fax, EDI or e-mail.

RETURN GOODS POLICY: Goods shall not be returned without a return goods authorization number (RGA) issued by AMT customer service. The RGA number must be listed on the packing list. Only current model and part numbers with a valid date code may be returned (within one year from date of purchase). **A 20% restocking and packaging charge will apply to all returns. All shipping charges must be pre-paid. No exceptions.**

ORDER CHANGES BY CUSTOMER: Orders in process may not be changed except with written consent and may be subject to special charges.

12 Month Limited Warranty

EXTENT AND DURATION OF LIMITED WARRANTY

Coverage: American Machine & Tool Company (herein "AMT") or IPT Pumps by Gorman-Rupp (herein "IPT") or Gorman-Rupp Industries Division of The Gorman-Rupp Company, Patterson, or the Gorman-Rupp Company (herein referred to as "G-R Unit") each individually warrants that its products and parts shall be free from defects in material ad workmanship for twelve (12) months from the date of purchase by the original end user when installation is made and maintenance is performed in accordance with G-R Unit's recommendations. Wear and tear resulting from use and items normally consumed in use are not covered.

EXCEPTIONS

(A) This Limited Warranty shall not apply to mechanical seals in AMT or IPT pumps and the following products and parts: engines, motors, trade accessories and all other products, components, parts and materials not manufactured by the G-R Units. These items may, however, be covered by the warranties of their respective manufacturers. (B) This warranty does not extend to or apply to any unit which has been repaired or altered at any place other than by a G-R Unit, or by persons not expressly approved by a G-R Unit to make repairs or alterations, nor to any unit the serial number, model number or identification of which has been removed, defaced or altered. (C) This warranty does not extend to any product manufactured by a G-R Unit, which has been subjected to mis-use, neglect, accident, improper installation, or use in violation of instructions furnished by a G-R Unit. (D) Pump Kits: This warranty does not extend to any product sold by a G-R Unit unassembled as a Pump Kit. Pump Kits are warranted against defects in material and workmanship for 60 days from the date of shipment from a G-R Unit. Any Pump Kit parts deemed defective by a G-R Unit will be replaced free of charge within 60 days of shipment. Pump Kits are not returnable for credit.

LIMITATIONS

THE G-R UNITS' SOLE AND EXCLUSIVE WARRANTY WITH RESPECT TO THEIR PRODUCTS AND PARTS IS THIS LIMITED WARRANTY. THIS LIMITED WARRANTY IS IN LIEU OF ALL OTHER EXPRESS AND/OR IMPLIED WARRANTIES, INCLUDING IMPLIED WARRANTIES OF MERCHANTABILITY AND FITNESS FOR PARTICULAR PURPOSE.

EXCLUSIVE REMEDY AND DAMAGES

The sole and exclusive remedy for breach of this Warranty by a G-R Unit and the entire extent of its liability for such breach or for damages arising from the use of the products and parts covered under this Limited Warranty, shall be as follows:

1. **Repair or Replacement:** If inspection shows that any G-R Unit product or part covered under this Limited Warranty is defective in materials or workmanship, the G-R Unit shall repair or replace the defective or non-conforming product or part without charge, whichever the G-R Unit chooses. You must have properly maintained and used the product or part claimed to be defective in accordance with the maintenance schedule or manual, which comes with the product. No allowance will be made for labor, installation, removal, transportation or other charges incurred by you in connection with such repair or replacement.
2. To obtain the above remedy:
    A. Immediately notify the G-R Unit upon discovery of the claimed defect in materials or workmanship and provide the serial number or date code of the product and/or part(s) or provide the G-R Unit with the invoice or bill of sale referencing the product by no later than the expiration date of the warranty period.
    B. The G-R Unit will advise whether inspection will be necessary and how whether repair or replacement will be made. If inspection by the G-R Unit is necessary, the pump or defective part must be sent freight pre-paid to the G-R Unit. Return shipment will be F.O.B. the G-R Unit's plant.
    C. **Return Goods Authorization Requirement:** No product will be accepted for return or replacement without the prior written authorization of the G-R Unit. Upon such authorization, and in accordance with instructions from the G-R Unit, the product will be returned to the G-R Unit, shipping charges prepaid by the Buyer.

3. **Damages:** The G-R Unit's liability for damages for breach of this Limited Warranty shall not exceed the amount of the purchase price of the product or part(s) in respect to which Such damages are claimed. **IN NO EVENT SHALL THE G-R UNITS BE LIABLE FOR INCIDENTAL, CONSEQUENTIAL OR SPECIAL DAMAGES FOR BREACH OF THIS LIMITED WARRANTY.**

Some states do not allow the exclusion or limitation of incidental or consequential damages, so the above limitation or exclusion may not apply to you. This Limited Warranty gives you specific legal rights, and you may also have other rights, which vary from state to state.

Instruction Manual

Electronic Metering Pumps

CAUTION

Carefully read and understand all precautions before installing or servicing any metering pump.

CAUTION

For file reference, please record the following data:

Model No: _____

Serial No: _____

Installation Date: _____

Installation Location: _____

When ordering replacement parts for your LMI Metering Pump or Accessory, please include complete Model Number and Serial Number of your unit.

LMI MILTON ROY

novatech INTERNATIONAL
sales@novatech-usa.com
www.novatech-usa.com
Tel: (866) 433-6682 Fax: (866) 433-6684
Tel: (281) 359-8538 Fax: (281) 359-0084

201 Ivyland Road
Ivyland, PA 18974
TEL: (215) 293-0401
FAX: (215) 293-0445
www.lmipumps.com

Replaces same of Rev. Q 7/09
1615.R 7/2010

Contents

1.0 Introduction 4
1.1 Spare Parts 4
2.0 Unpacking Check List 6
3.0 Pre-Installation Instructions 8
4.0 Installation 10
4.1 Pump Location and Installation 10
4.2 Pump Mounting 10
4.3 Tubing Connections 15
4.4 Multi-Function Valves 16
4.5 4-Function Valve Installation 18
4.6 AutoPrime Liquid End 19
4.7 Foot Valve/Suction Tubing Installation 20
4.8 Injection Check Valve and Discharge Tubing Installation 21
5.0 Liquid End Parts List 22
6.0 Start-Up and Adjustment 23
6.1 Output Adjustment Controls 23
6.2 Start-Up/Priming for Pump Supplied with Multi-Function Valve 24
6.3 Start-Up/Priming without Multi-Function Valve 25
6.4 Output Adjustment 26
6.5 Total Pump Output 26
7.0 Methods of External Triggering or Pacing B7, C7 and P7 Pumps 28, 29
8.0 Calibration 30
8.1 Pressure Control 31
8.2 Calibration Procedure - On-Site Volumetric Calibration in External Mode 32
9.0 Spare Parts Replacement/Routine Maintenance 32
9.1 Depressurizing the Discharge Line (For Pumps Equipped with a 3-FV or a 4-FV Only) 32
9.2 Liquifram™ (Diaphragm) Replacement 33
9.3 Cartridge Valves, Seal Rings/Valve Balls and Injection Check Valve Spring Replacement 36
10.0 Checking Pump for Proper Zero Position (Stroke Knob) 37
10.1 Type I: Push-on Knob 37
11.0 Troubleshooting 40
12.0 EPU Resistance Chart ..... Back Cover

1.0 Introduction

LMI is the world's most versatile manufacturer of economical and efficient metering pumps. This manual addresses the installation, maintenance and troubleshooting procedures for manually and externally controlled pumps. LMI has a worldwide network of stocking representatives and authorized repair centers to give you prompt and efficient service.

Please review this manual carefully. Pay particular attention to warnings and precautions. Always follow good safety procedures, including the use of proper clothing, eye and face protection.

This manual is for Series AA, B, C, E, J5, and P pumps.

1.1 Spare Parts

LMI recommends replacing the elastomeric components of the pump on an annual basis. RPM Pro Pacs™ and spare part kits are available from your local LMI Master Stocking Distributor.

Example:

Your pump consists of two main components:

1. The **Drive Assembly**; and

2. The **Liquid Handling Assembly**.

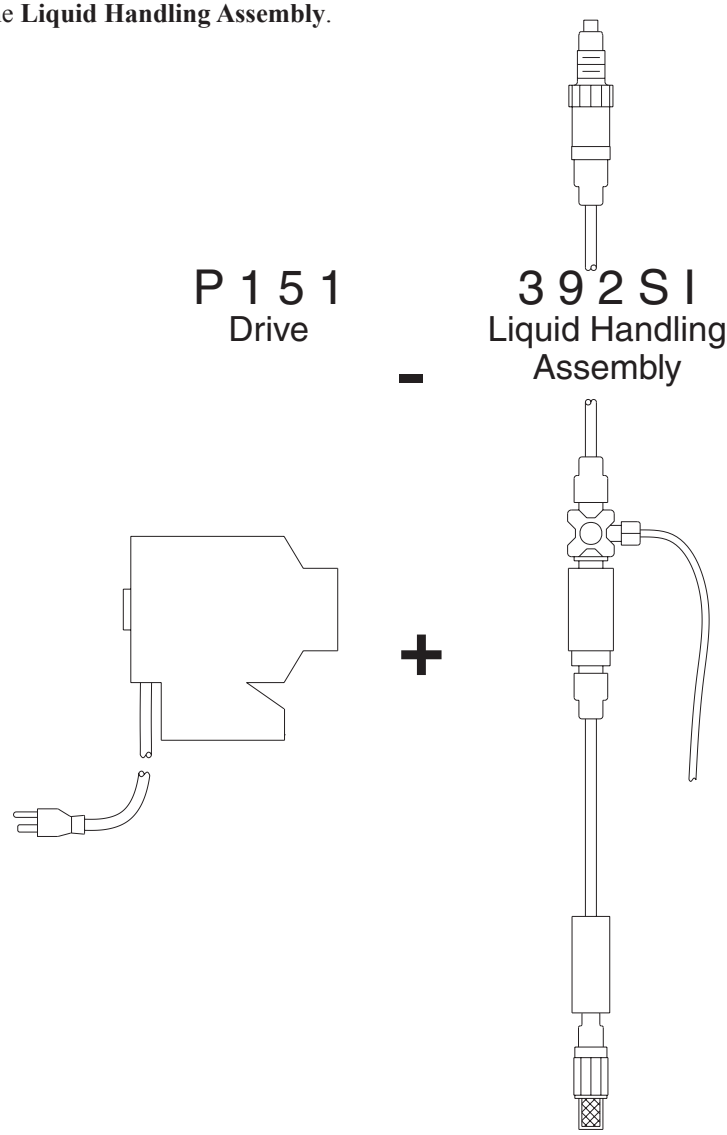

2.0 Unpacking Check List

Your carton will contain many or all of the following items. Please notify the carrier immediately if there are any signs of damage to the pump or its parts.

Please refer to the enclosed Instruction Supplement for an illustration and electrical diagram of your complete pump.

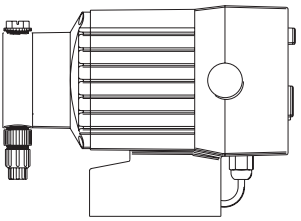

Metering Pump



Foot Valve



Ceramic Foot Valve Weight

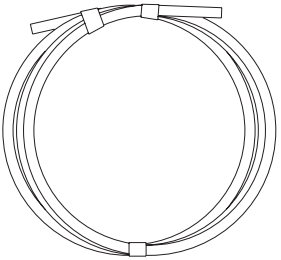

Tubing

Depending on the model, your carton may contain 0, 1, 2 or 3 rolls of tubing. Your carton may contain a roll of vinyl tubing: DO NOT USE ON PRESSURIZED LINES. The vinyl tubing is for connection to the SUCTION SIDE OF THE PUMP HEAD OR THE 3 OR 4 FUNCTION VALVE RETURN LINE ONLY.



Tubing Connection Hardware



Injection Check Valve



Instruction Supplement

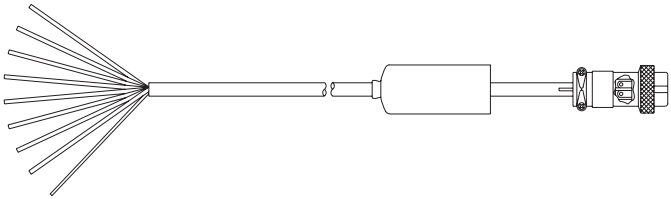

Optional Milliamp Input Cable



Optional 4-Function Valve (pictured) or
Optional 3-Function Valve

3.0 Pre-Installation Instructions

The following precautions should be taken when working with LMI metering pumps. Please read this section carefully prior to installation.

Precautions



Protective Clothing

ALWAYS wear protective clothing, face shield, safety glasses and gloves when working on or near your metering pump. Additional precautions should be taken depending on the solution being pumped. Refer to MSDS precautions from your solution supplier.



Water Pre-Prime

All LMI pumps are pre-primed with water when shipped from the factory. If your solution is not compatible with water, disassemble the Pump Head Assembly. Thoroughly dry the pump head, valves, seal rings, balls and Liquifram™ (diaphragm). Reassemble head assembly tightening screws in a crisscross pattern. Refill the pump head with the solution to be pumped before priming the pump. (This will aid in priming.)



Solution Compatibility

Determine if the materials of construction included in the liquid handling portion of your pump are adequate for the solution (chemical) to be pumped. LMI pumps are tested by NSF for use on muriatic acid (up to 37% hydrochloric acid), and sodium hypochlorite (up to 12.5% solution). Always refer to the solution supplier and the **LMI Chemical Resistance Chart** for compatibility of your specific LMI metering pump. Contact your local LMI distributor for further information.



Tubing Connections

Inlet and outlet tubing or pipe sizes must not be reduced. Make certain that all tubing is SECURELY ATTACHED to fittings prior to start-up (see Section 4.3, Tubing Connections). ALWAYS use LMI supplied tubing with your pump, as the tubing is specifically designed for use with the pump fittings. It is recommended that all tubing be shielded to prevent possible injury in case of rupture or accidental damage. If tubing is exposed to sunlight, black UV resistant tubing should be installed. Check tubing frequently for cracks and replace as necessary.



Fittings And Machine Threads

All fittings should be hand-tightened. An additional 1/8 - 1/4 turn after the fitting contacts the seal ring may be necessary to provide a leak-proof seal. Excessive overtightening or use of a pipe wrench can cause damage to the fittings, seals, or pump head.

All LMI pumps have straight screw machine threads on the head and fittings and are sealed by the seal rings or O-rings. **DO NOT use Teflon® tape or pipe dope to seal threads. Teflon® Tape may only be used on the 1/2" NPT thread side of the Injection Check Valve as well as stainless steel liquid end connections.**



Plumbing

Always adhere to your local plumbing codes and requirements. Be sure installation does not constitute a cross connection. Check local plumbing codes for guidelines. LMI is not responsible for improper installations.



Back Pressure/Anti-Syphon Valve

If you are pumping downhill or into low or no system pressure, a back pressure/anti-syphon device such as LMI's Four Function Valve should be installed to prevent overpumping or syphoning. Contact your LMI distributor for furthur information.

Electrical Connections

To reduce the risk of electrical shock, install only on a circuit protected by a ground-fault circuit-interrupter (GFCI). The metering pump must be plugged into a grounded outlet with ratings conforming to the data on the pump control panel. The pump must be connected to a good ground. **DO NOT USE ADAPTERS!** All wiring must conform to local electrical codes.

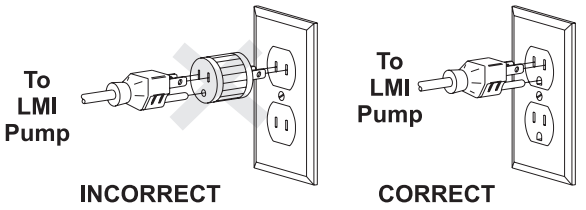

WARNING: Do not hook a US style pump plug into a non-US (UK, Aust, NZ or Swiss) wired power system. The US style 240VAC power system has two 110VAC hot legs and one neutral. The European style system has one 240VAC hot leg and a neutral. Hooking up a US pump to the European wired system will cause pump failure.

4.0 Installation

4.1 Pump Location and Installation

Locate pump in an area convenient to solution tank and electrical supply.

The pump should be accessible for routine maintenance, and should not be subjected to ambient temperatures above 122°F (50°C). If the pump will be exposed to direct sunlight, LMI black, UV resistant tubing should be installed.

4.2 Pump Mounting

The pump can be mounted in one of two ways:

A. FLOODED SUCTION (ideal installation); or

B. SUCTION LIFT - when suction lift is less than 5 feet (1.5 m) for solutions having a specific gravity of water. For denser solutions, consult distributor.

Your LMI metering pump must be mounted so that the suction and discharge valves are vertical. **NEVER position pump head and fittings horizontally.**

4.2.1 Flooded Suction

The pump is mounted at the base of the storage tank. This installation is the most trouble-free , and is recommended for very low outputs, solutions that gasify, and high-viscosity solutions. Since the suction tubing is filled with solution, priming is accomplished quickly and the chance of losing prime is reduced.

CAUTION

When pumping downhill or into low or no pressure system, a back pressure/anti-syphon device should be installed to prevent overpumping or syphoning.

Note

Although popular for all solutions, LMI recommends flooded suction installations for all high-viscosity fluid applications.

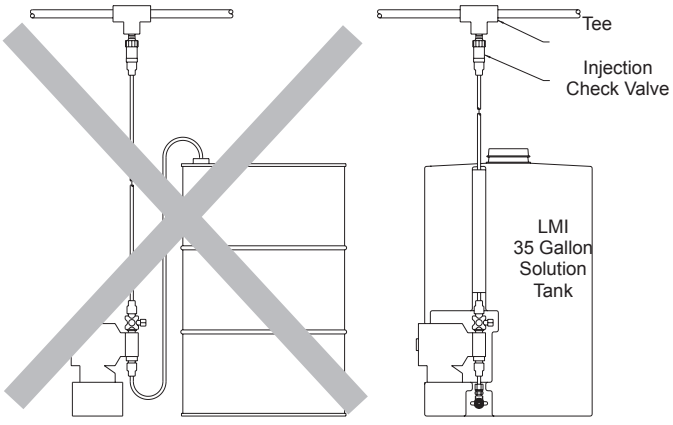

INCORRECT **CORRECT**

Avoid this type of false flooded suction.

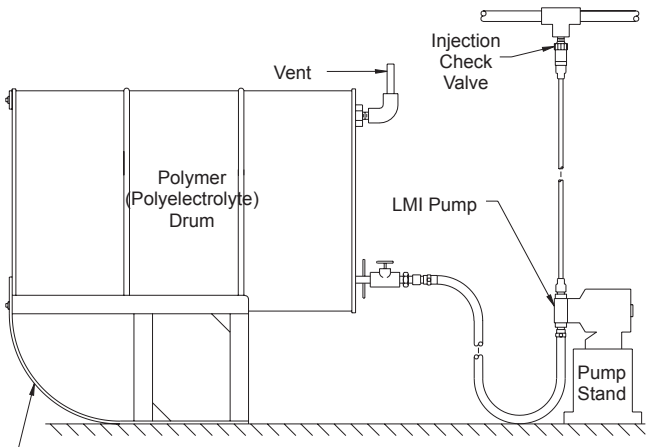

CORRECT

4.2.2 Suction Lift - Wall Bracket Mount

The pump may be mounted using an LMI Wall Mount Bracket Assembly (part no. 34643) directly above the solution tank. A pump mounted in this manner allows for easy changing of solution tanks or drums.

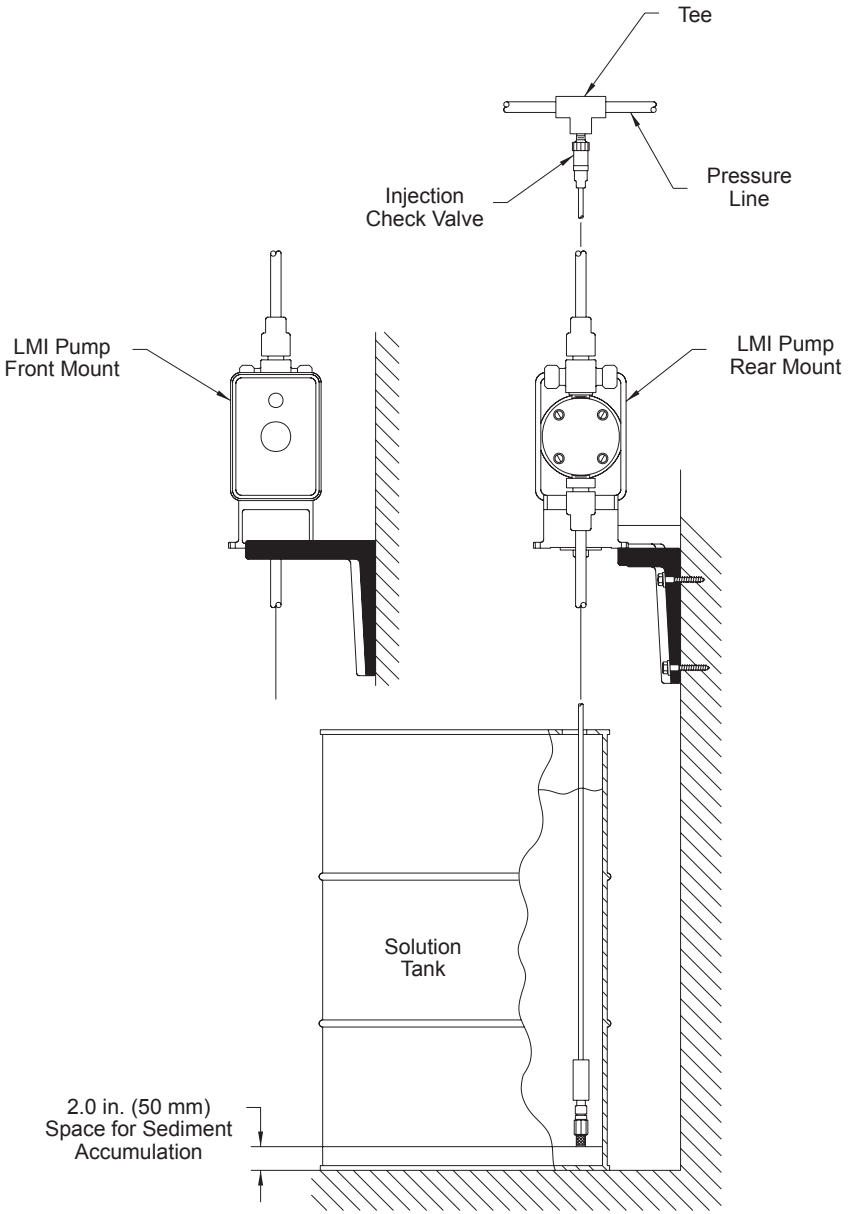

4.2.3 Suction Lift - Tank Mount

The pump may be mounted on a molded tank provided there is a recess to keep the pump stationary. LMI 10-gallon tank (part no. 27421), 35-gallon tank (part no. 27400), and 50-gallon tank (part no. 26350) have molded recesses for pump mounting.

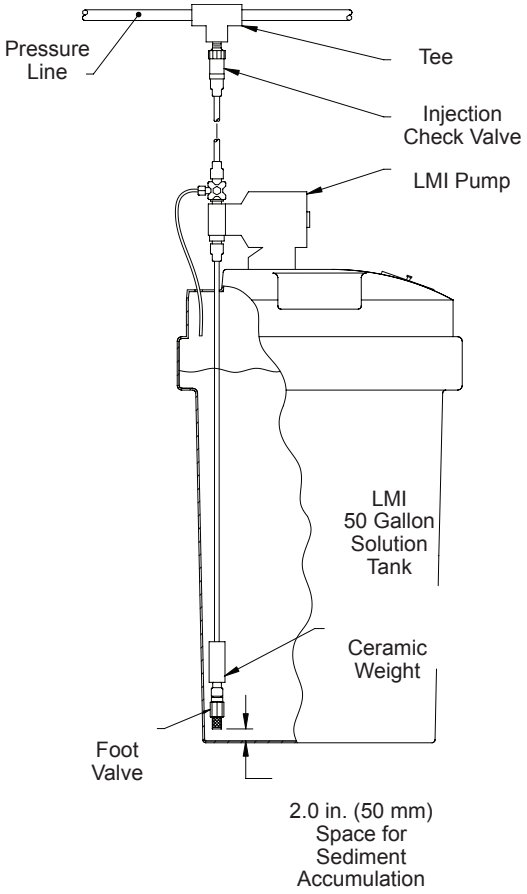

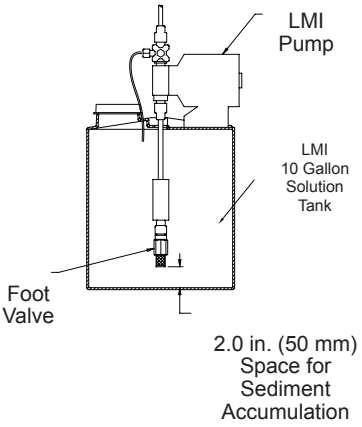

4.2.4 Suction Lift - Shelf Mount

The pump may be mounted on a shelf (customer supplied) maintaining a suction lift of less than 5 ft (1.5 m). An LMI mounting kit (part number 10461) is available for securing the pump to a shelf.

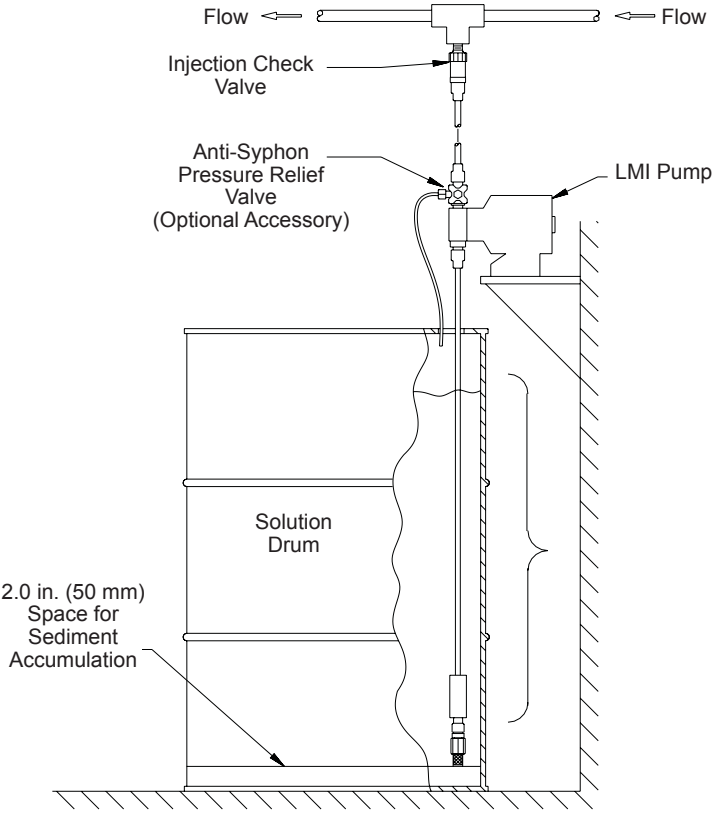

4.3 Tubing Connections

1. Insert tubing through Coupling Nut—Tubing should enter the smaller end of the Coupling Nut first, orienting the larger opening of the Coupling Nut toward the tubing end.

2a. For 1/4" OD tubing: Position the Female Ferrule so that 1/4" to 3/8" (5-10 mm) of tubing protrudes from the Female Ferrule. Orient the raised collar of the Ferrule toward the Coupling Nut (reference FIGURE 1).

2b. For 3/8" or 1/2" OD tubing: Position a Female Ferrule about one inch (25 mm) from end of tubing. Orient the raised collar of the Female Ferrule toward the Coupling Nut. Then, insert the Male Ferrule onto the end of the tube, pushing the tube into the bottom of the groove in the Male Ferrule. Then slide the Female Ferrule down the tubing and with your fingers, press tightly into the Male Ferrule (reference FIGURE 2).

3. Firmly hand tighten the Coupling Nut onto the fitting. Note: Tightening with pliers may cause the Ferrules to break.

CAUTION

A. USE ONLY LMI TUBING—ALWAYS use LMI supplied tubing with your pump, as the tubing is specifically designed for use with the pump fittings.

B. *DO NOT USE CLEAR VINYL TUBING ON THE DISCHARGE SIDE OF THE PUMP.* The pressure created by the pump can rupture vinyl tubing.

C. Before installation, all tubing must be cut with a clean square end.

D. Valve and head connections from the factory are capped or plugged to retain pre-prime water. Remove and discard these caps or plugs before connecting tubing.

DO NOT USE PLIERS OR PIPE WRENCH ON COUPLING NUTS OR FITTINGS.

DO NOT REUSE FERRULES—USE ONLY NEW FERRULES.

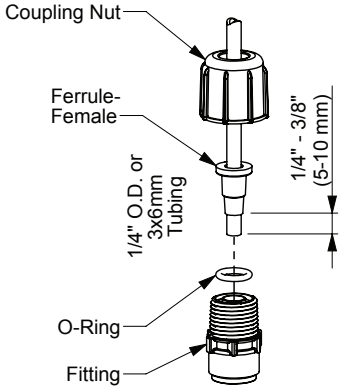

FIGURE 1

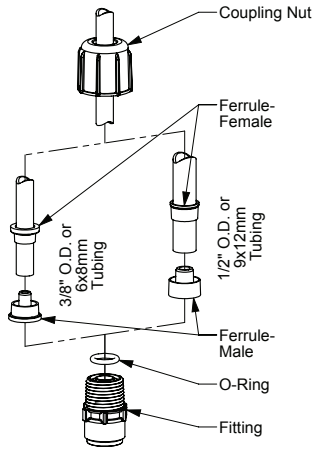

FIGURE 2

4.4 Multi-Function Valves

Your pump may be equipped with one of the following multi-function valves: 3-FV, 4-FV, or standard discharge valve. If your pump is not equipped with a multi-function valve and you feel it is needed in your application, it can be purchased as an accessory. Contact your local LMI stocking distributor.

4.4.1 Three Function Valve (3-FV)

1. **Pressure Relief**

   If the discharge line is over pressurized, the valve opens sending solution back to the supply tank.

2. **Line Depressurization**

   Opening the relief knob provides line drain back to the supply tank.

3. **Priming Aid**

   Opening the relief knob assists in priming the pump by venting the discharge line to the atmosphere.

4.4.2 Four Function Valve (4-FV)

1. **Pressure Relief**

   If the discharge line is over pressurized, the valve opens sending solution back to the supply tank.

2. **Line Depressurization**

   Opening the relief knob provides line drain back to the supply tank.

3. **Anti-Syphon**

   Prevents syphoning when pumping solution downhill or into a vacuum.

4. **Back Pressure**

   Supplies approximately 25 psi back pressure to prevent overpumping when little or no system back pressure is present.

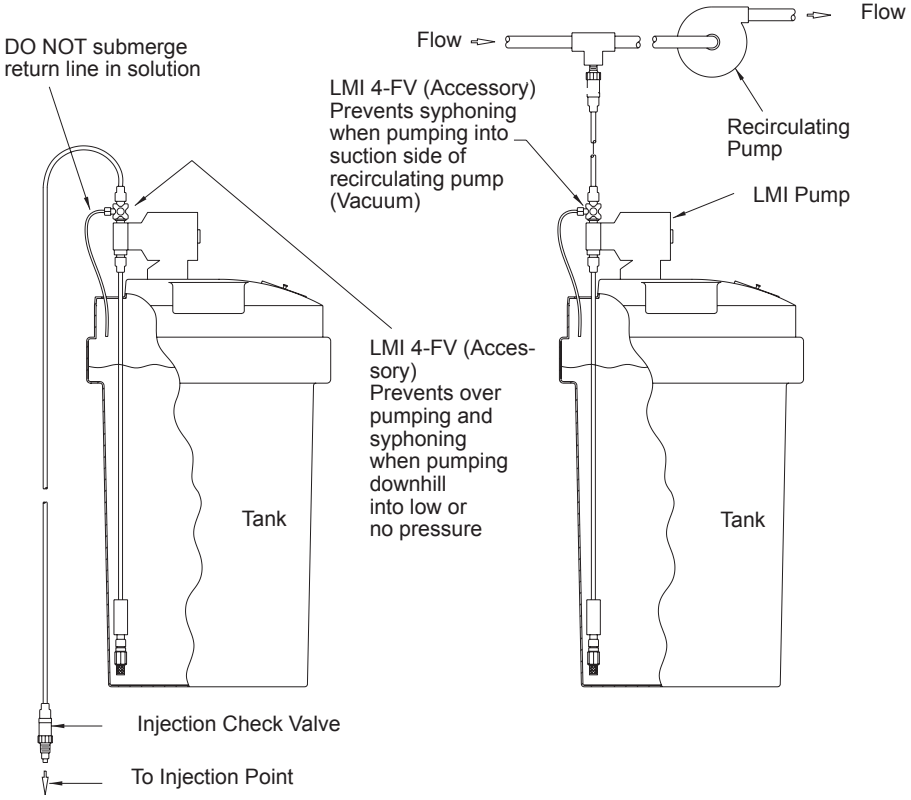

Typical 4-FV Installation

4.5 4-Function Valve Installation

- To mount to a pump, remove the discharge fitting from the pump (if present) leaving the cartridges in the pump head. Position the 4FV coupling nut on pump head over cartridges with threads up, and insert 4FV fitting and thread into pump head over cartridges. Tighten the fitting to 50 in-lbs using a 13/16" or 20 mm socket. Insert the large opening on the 4-Function valve into the 4FV coupling nut and hand tighten. You can position the valve to have the pressure relief port in any convenient location by tightening the 4FV coupling nut with the pressure relief port positioned 90º CCW from desired location, then holding the nut stationery while turning the valve the final 90º to desired position.
- Connect 1/4" tubing to the pressure relief port and route to supply container.
- Connect discharge line using LMI tubing connection system or 1/2" pipe thread.

  The 4-Function Valve is designed for double¬ballchecks. A second valve cartridge is required when mounting a new 4-Function Valve to an existing pump with a 300, 400 or 700 liquid end.

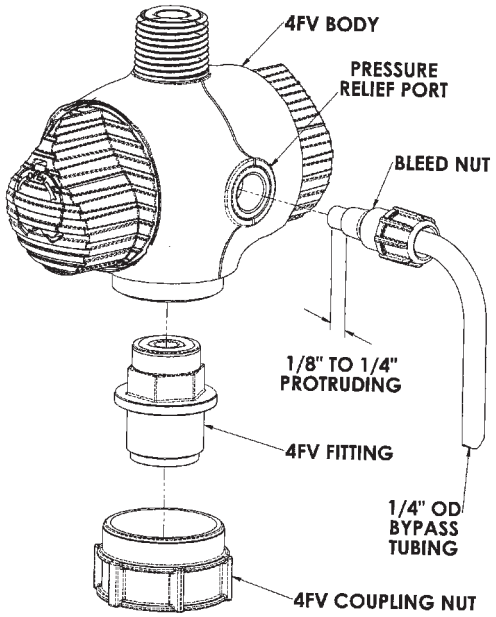

4-Function Valve Tubing Connection

4.6 AutoPrime™ Liquid End

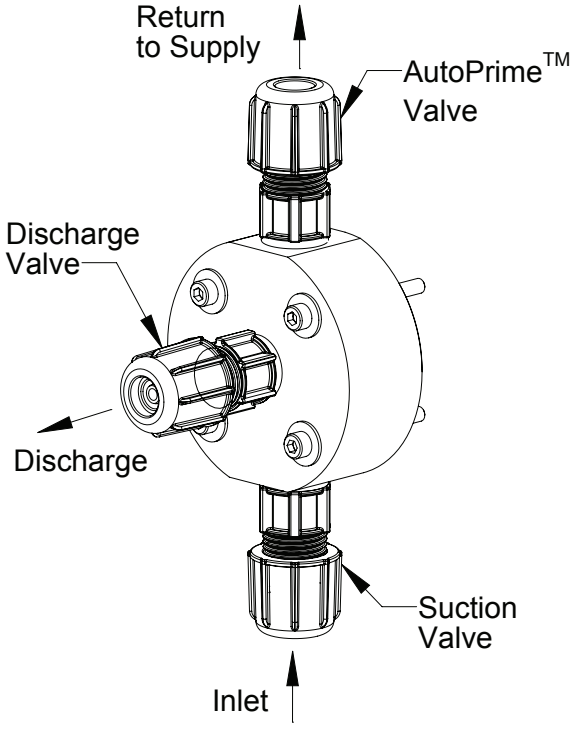

AutoPrime™ Liquid End

AutoPrime™

Pumps installed with the AutoPrime™ Liquid End are equipped with a valve that allows for constant removal of vapors and gasses inherent with effervescent chemicals such as Sodium Hypochlorite and Hydrogen Peroxide. The valve keeps the pump primed automatically. When installing a pump equipped with an AutoPrime™ Liquid End, connect the 1/2" OD Polyethylene tubing to the top vertical fitting, and route this line back to the supply tank. To ensure priming, this tubing should not be submerged in the solution. The horizontal fitting is the discharge, and the bottom vertical fitting is the suction.

4.7 Foot Valve/Suction Tubing Installation

The Foot Valve acts as a check valve to keep the pump primed in suction lift applications.

The foot valve is designed to be submersed in the solution tank or drum and must sit in a vertical position at the bottom. Position approximately 2 inches (50 mm) off the bottom if the tank or drum contains sediment.



Pump models equipped with high-viscosity liquid ends are not equipped with foot valves. Flooded suction is recommended. A 1/2" NPT connector is included for flooded suction installations.

The ceramic weight, when installed, positions the foot valve in a vertical position.

1. Attach the foot valve to one end of the suction tubing (see Tubing Connections, Section 4.3).
2. Slide the ceramic weight over the tubing end until it contacts the top of the foot valve coupling nut.
3. Place foot valve and tubing into the solution tank. Check that the foot valve is vertical and approximately 2 inches (50 mm) from the bottom of the tank or drum (see illustration). Connect the other end of the tubing to the suction side of the pump head (bottom side) (see Tubing Connections, Section 4.3).

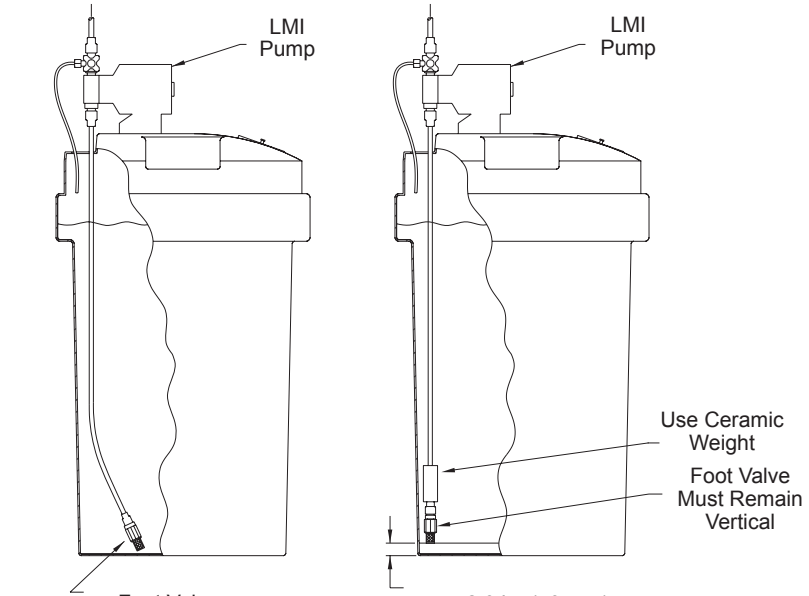

Proper Foot Valve Position

4.8 Injection Check Valve and Discharge Tubing Installation

A. Installing Injection Check Valve (Figure 1)

1. The Injection Check Valve prevents backflow from a treated line. Install the injection check valve at the location where chemical is being injected into the system.
2. Any size Female NPT fitting or pipe tee with a reducing bushing to ½" Female NPT will accept the injection check valve. PTFE tape should only be used on threads that are connected with pipes.
3. When installing the Injection Check Valve, be sure to position it so that the valve enters the bottom of your pipe in a vertical position. Variations 40° left and right are acceptable.

B. Connecting Discharge Tubing

Note: ***Cut tubing to length needed for discharge line.***

1. Route tubing from the injection check valve to the metering pump, making sure it does not touch hot or sharp surfaces, or is bent so sharply that it kinks.
2. Reference 4.3 Tubing Connections.

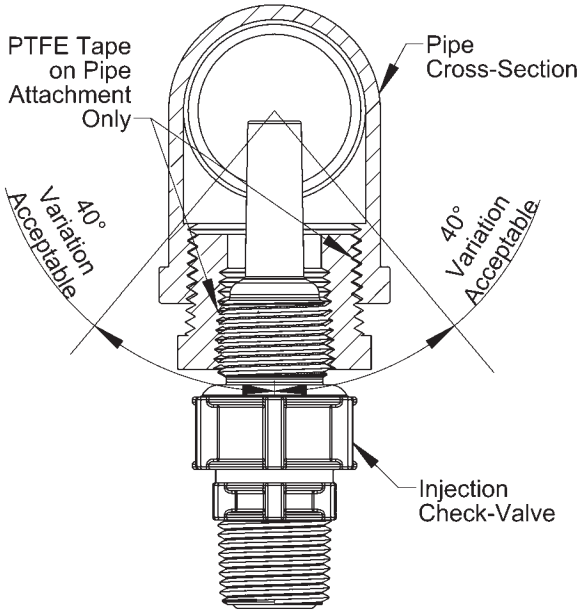

FIGURE 1

5.0 Liquid End Parts List

Reference Liquid End Sheets on LMI Online Library at: www.lmipumps.com.

1. Select “Online Literature Library” in the Navigation Bar on left.
2. Once on Online Literature Library use “Product” drop down to select “Liquid Handling Assemblies.”
3. Select “Gallery” or ”Index” to view Liquid End sheets.

6.0 Start-up and Adjustment



a.) The pump is normally self-priming if suction lift is 5 ft (1.5m) or less and the steps below are followed.

b.) Pumps are shipped from the factory with water in the pump head to aid in priming.

6.1 Output Adjustment Controls



Manual series pump controls are not equipped with pressure control.

1. Pressure Control Adjustment (if equipped): Pressure control provides the adjustment of the pump's pressure capability and power consumption, reducing heat, pipe shock and pulsation while increasing pump life. See Section 7.0 after priming for proper adjustment settings.
2. Speed Adjustment (Upper Knob) (if equipped): Speed control provides adjustment of the percent of maximum strokes per minute. Turning this knob clockwise increases stroke frequency (speed).
3. Stroke Adjustment (Lower Knob): Stroke control provides adjustment of the percent maximum of solution discharged during each pump actuation. Turning this knob clockwise ↻ increases solution displacement.

***A7 and P7 Only**: When operating the pump in external mode, the speed control knob should be turned fully counter-clockwise ↺.*

6.2 Start-Up/Priming for Pump Supplied with Multi-Function Valve



Read this entire section completely before proceeding.

When all precautionary steps have been taken, the pump is mounted, and the tubing is securely attached, you may now start priming the pump.

1. Plug in or switch the pump on.
2. While the pump is running, set the speed knob at 80% and the stroke knob at 100%.



If the pump is equipped with pressure control, turn fully clockwise. ↷

3. 1/4 turn open the relief side (black knob) of the multi-function valve.
4. The suction tubing should begin to fill with solution from the tank.
5. A small amount of solution will begin to discharge out the return line of the multi-function valve. Once this happens, 1/4 turn or release the knob and **SHUT THE PUMP OFF**. (If pump is not equipped with an on/off switch, disconnect the power cord.)
6. The pump is now primed.
7. Proceed to output adjustment, Section 6.4.



If the pump does not self-prime, remove the multi-function valve on the discharge side of the pump head. Remove the check valve and pour water or solution into the port until the head is filled. Replace valve, then follow start up/priming steps.

6.3 Start-Up/Priming without Multi-Function Valve



Read this entire section completely before proceeding.

When all precautionary steps have been taken, the pump is mounted, and the tubing is securely attached, you may now prime the pump.

1. Plug in or switch on the pump.
2. While the pump is running, set the speed knob at 80% and the stroke knob at 100%.



If the pump is equipped with pressure control, turn fully clockwise ↻.

3. The suction tubing should begin to fill with solution from the tank.
4. Once the solution begins to exit the pump head on the discharge side, **SHUT THE PUMP OFF**. (If pump is not equipped with an on/off switch, disconnect the power cord).
5. The pump is now primed.
6. Proceed to output adjustment, Section 6.4.



If the pump does not self-prime, remove the fitting on the discharge side of the pump head. Remove the ball and pour water or solution into the port until the head is filled. Replace valve, then follow start up/priming steps.

Start-Up/Priming for AutoPrime™ Heads

Read this entire section completely before proceeding.

When all precautionary steps have been taken, the pump is mounted, and the tubing is securely attached, you may prime the pump.

1. Plug in or switch on the pump.
2. While the pump is running, set the speed knob and the stroke knob at 100%.
3. The suction tubing should begin to fill with solution from the tank as the AutoPrime™ valve purges air from the pump head.
4. Once the solution begins to exit the pump head through both the discharge valve and the AutoPrime™ valve, **SHUT THE PUMP OFF**.
5. The pump is now primed.
6. Proceed to output adjustment, Section 6.4.

6.4 Output Adjustment

Once the pump has been primed, an appropriate output adjustment **MUST** be made. Pump output should be calculated and adjustments made accordingly.

6.5 Total Pump Output

Calculate the total output of the pump as follows:

PUMP OUTPUT = MAX PUMP OUTPUT x % SPEED x % STROKE

Example: P151-392SI

Use MAX Output (from dataplate on bottom center of pump control panel) = 24 GPD (24 gallons per day).

If the pump is set at 60% speed and 70% stroke length, the approximate pump output is:

24.0 x 0.60 x 0.70 = 10.08 GPD (gallons per day). Divide by 24 (hours in one day) to calculate in gallons per hour.



*If pump is not equipped with speed adjustment, calculate by **Max Pump Output x % Stroke** only.*

7.0 Methods of Externally Triggering

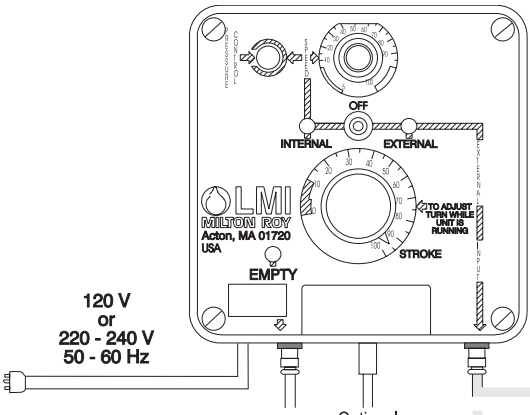

Method of Triggering LMI Pump Through 4-Pin Connector

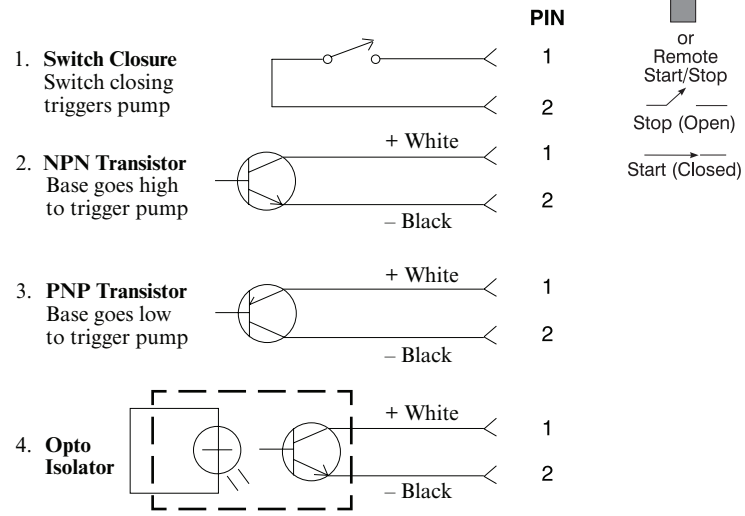



Switch or transistors must be capable of switching 15V DC at 2 milliamperes. Minimum time in low impedance state (ON) is 50 milliseconds. Minimum time in high impedance state (OFF) is 100 milliseconds.

or Pacing B7, C7 and P7 Pumps

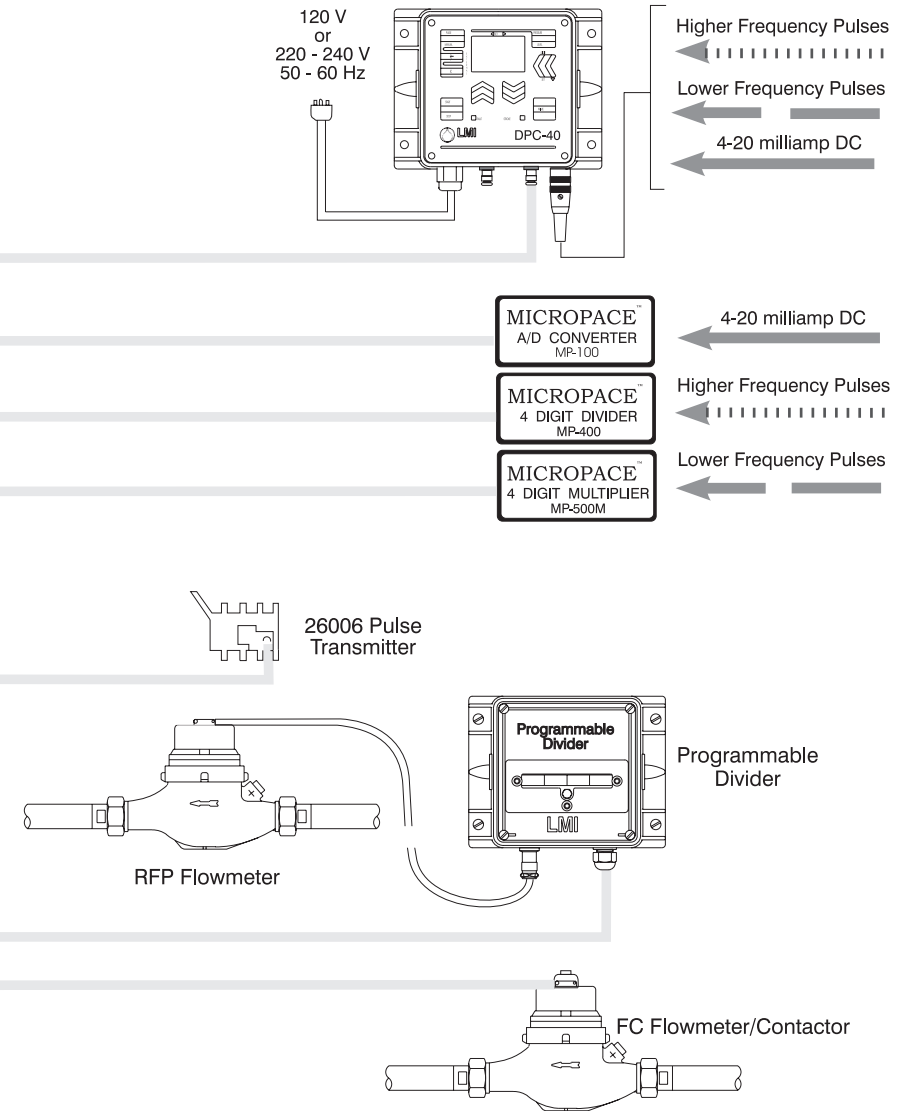

8.0 Calibration

Once installation is complete and the approximate output has been determined, the pump should be calibrated to adjust speed and stroke for your actual desired output. (Calibration cylinders may be purchased from your local LMI distributor, ref. publication 1798.)

. **1**. Be sure the pump is primed, and discharge tubing and Injection Check Valve are installed as they would be in normal service (i.e., including factors such as injection pressure, fluid viscosity, and suction lift).

2. Place the Foot Valve in a graduated container with a volume of 1000 ml or more.

3. Plug in and switch pump to Internal Mode. Pump until all the air is exhausted from the suction line and head.

4. Turn the pump off. Refill graduated container to a level starting point.



If pump is equipped with pressure control, see Section 8.1 before proceeding.

5. Using a stopwatch or timer, turn the pump on for a measured amount of time (50 pump strokes minimum). The longer the time period, the more confident you can be of the results. Be sure to count the number of strokes during the calibration period when making comparisons.

6. Turn the pump off. Note the time elapsed in relation to volume displaced in the graduate. Now, calculate the output in the time unit you choose (minutes, hours, days, etc.).

7. If the output is too low or too great, adjust speed and or stroke, estimating required correction and repeat steps 1-7.

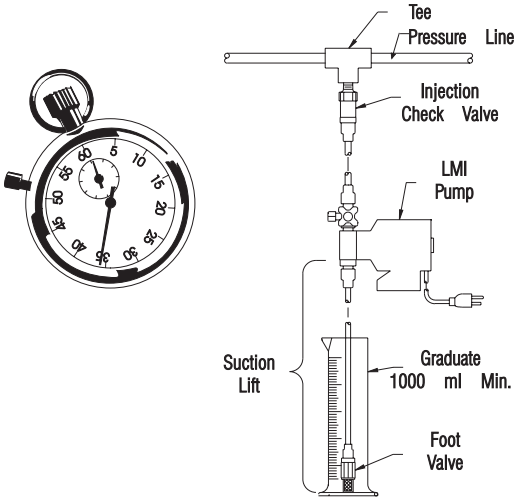

8.1 Pressure Control

Adjust Pressure Control: While unit is running, turn Pressure Control Potentiometer slowly counter-clockwise ↶ until unit just begins to stall. From this stall point, now turn Pressure Control Potentiometer clockwise ↷ halfway between the stall point and maximum setting. This is the optimum pressure control setting for your application.



Increase setting if back pressure is increased. Adjusting pressure control decreases pressure rating of pump.

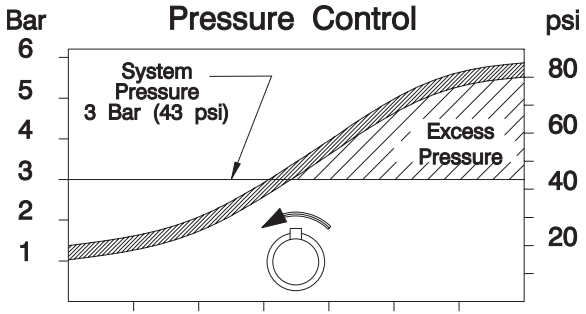

Adjust pressure control to reduce heat, shock, and pulsations; and to prolong pump life.

8.2 Calibration Procedure - On-Site Volumetric Calibration in External Mode

1. Since pump output is governed by an external device such as Flowmeter-Pulser, Liquitron™ Controller, or 4-20 mA DC signal from an instrument with an LMI Analog-to-Digital Converter, **only the output per stroke may be calibrated**.
2. With pump primed and discharge tubing connected to the injection point as it would be in normal service, place Foot Valve Assembly in a graduated container with a volume of 1000 ml or more.
3. Switch pump to **Internal** mode with Speed Knob set at 100 until air is exhausted from suction line and pump head.
4. **Adjust Pressure Control (if desired)** - See Section 8.1.
5. Switch pump **OFF** and note solution level in graduated container. Refill graduate to a starting point.
6. Switch pump **ON** and **count the number of strokes** for exactly one minute, then switch pump **OFF**.
7. Note volume pumped during the calibration period of one minute. Divide into this the number of strokes to determine the volume of solution pumped per stroke.

   Example: 500 ml in 100 strokes = 5.0 ml per stroke.

Multiply this by your expected stroke rate per minute, per hour or per day and compare with desired output requirements.

8. Adjust Stroke Length Knob (lower knob) to your best estimate of required correction and repeat calibration procedure.

9.0 Spare Parts Replacement Routine Maintenance

9.1 Depressurizing the Discharge Line (For Pumps Equipped with a 3-FV or a 4-FV only)



ALWAYS wear protective clothing, face shield, safety glasses and gloves when performing any maintenance or replacement on your pump.



Read steps 1 and 2 below before proceeding.

1. Be sure the Injection Check Valve is properly installed and is operating. If a shut off valve has been installed downstream of the Injection Valve, it should be closed.



Be sure your relief tubing is connected to your multi-function valve and runs back to your solution drum or tank.

2. 1/4 turn the black knob on the valve. The discharge line is now depressurized. Keep valve open until solution drains back down the discharge tubing into solution drum or tank. Then 1/4 turn knob to normal position.

9.2 Liquifram™ (Diaphragm) Replacement



ALWAYS wear protective clothing, face shield, safety glasses and gloves when working near or performing any maintenance or replacement on your pump. See MSDS information from solution supplier for additional precautions.

LMI metering pumps are designed for trouble-free operation, yet routine maintenance of elastomeric parts is essential for optimum performance. This involves replacing the Liquifram™, cartridge valves or seal rings/valve balls, multi-function valve cap assemblies and the injection check valve spring. LMI recommends replacing these parts at least once a year; however, frequency will depend on your particular application.

When replacing the Liquifram™ and the cartridge valves or seal rings/valve balls, the injection check valve spring should also be replaced (see next Section 9.3). A Spare Parts Kit (SP-#) or RPM Pro Pac™ kit containing these parts may be obtained from your local distributor.

Replacing the Liquifram™:

1. Carefully depressurize, drain, and disconnect the discharge line (see Section 8.1 in this manual). Place the Foot Valve into a container of water or other neutralizing solution. Turn the pump on to flush the head assembly. Once the pump head has been flushed, lift the Foot Valve out of the solution and continue to pump air into the pump head until the pump head is purged of water or neutralizing solution.

If the liquid cannot be pumped due to Liquifram™ rupture using protective clothing, gloves and face shield, carefully disconnect the suction and discharge tubing. Remove the four screws to the head and immerse the head in water or other neutralizing solution.

2. Start the pump. While running, set the stroke knob to zero and turn the pump off.

See Section 10.0 for proper zero

.

3. With the unit off, unscrew the Liquifram™ by carefully grasping the outer edge and turning it counter-clockwise ↶ . Discard old Liquifram™. Remove the Liquifram™ disk if so equipped (located behind the Liquifram™) and check that the size code matches the size code on the replacement Liquifram™ (see illustration).

4. Reinstall the disk so the alignment pin on the disk (if present) seats in the recessed hole in the EPU.

CAUTION

Be careful not to scratch the Teflon® face of the new Liquifram™.

For Series B, C, & E

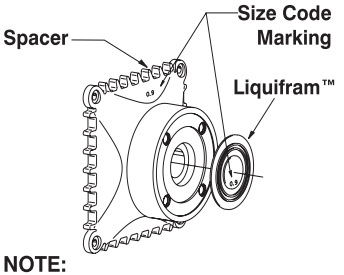

NOTE:
Size code markings for pumps supplied with 6.0 Liquiframs™ (diaphragms) should be referenced to the 6.0 Black Adapter, not the 3.0 Spacer

For Series AA, J, & P

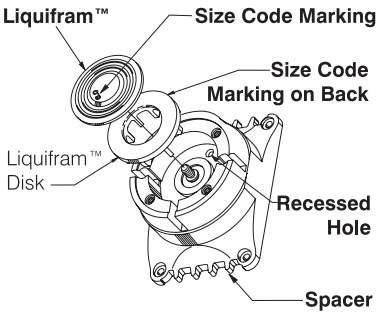

5. Start the pump and turn the stroke knob to the setting indicated on the following Stroke Setting Chart which matches the pump series number located on the pump dataplate. With the pump stroking (running), screw on the new Liquifram™ clockwise ↷ until the center begins to buckle inwards. Stop the pump.

Liquifram™ Stroke Setting Chart

Pump Series	Stroke Knob Setting
All AA, B, J, P Series C10, C11, C12, C70, C71, C72, C76, C90, C91, C92, E70, E71, E72	90%
C78	50%
C13, C14, C73, C74, C77, C93, C94, E73, E74	70%

* Liquifram™ on M Series pumps only, must be bottomed completely (turned all the way in). ***Do Not Use Straight Edge***.

6. Grasp the outer edge of the Liquifram™ and adjust by screwing it in or out so that the center of the Liquifram™ is flush with the outside of the spacer edge (see illustration below).

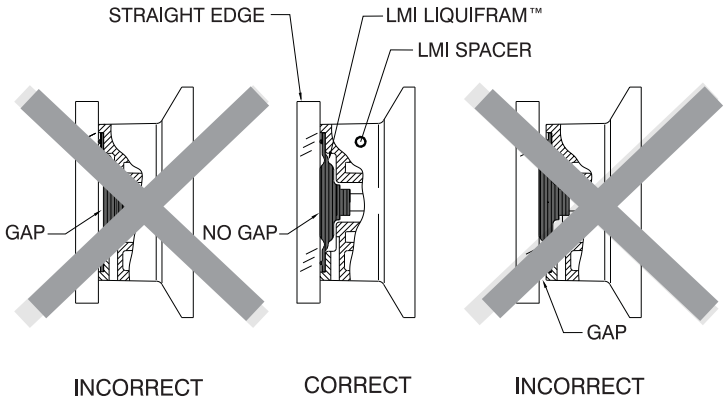

(Liquifram™ is flush with spacer and straight edge.)

7. Once the Liquifram™ is properly positioned, remount the pump head to the spacer using the four (4) screws. Tighten in a criss-cross pattern. After one week of operation, recheck the screws and tighten if necessary.

9.3 Cartridge Valves, Seal Rings/Valve Balls and Injection Check Valve Spring Replacement



ALWAYS wear protective clothing, face shield, safety glasses and gloves when working on or performing any maintenance or replacement on your pump. See MSDS information from solution supplier for additional precautions.

1. Refer to the LMI Metering Pump Price List for the proper Spare Parts Kit or RPM Pro Pac™ kit number or contact your local LMI stocking distributor.
2. Carefully depressurize and disconnect the discharge line (see Section 9.1 in this manual). Place the Foot Valve into a container of water or other neutralizing solution. Turn the pump on to flush the head assembly. Once the pump has been flushed, lift the Foot Valve out and continue to pump to let air into the pump head until pump is purged of water or neutralizing solution.

   Once the pump has been flushed, lift the Foot Valve out and continue to let air into the pump head until pump is purged of water or neutralizing solution.

   If the liquid cannot be pumped due to Liquifram™ rupture, with protective clothing, gloves and face shield, carefully disconnect the tubing and four screws to remove the head. Immerse the head in water or other neutralizing solution.

   Spare part replacement kits include specific instructions for valve replacement. Please follow the instructions included with the replacement kit.



***IMPORTANT**: Before disassembling the check valves, note the orientation of the valve.*

3. Carefully disconnect one tubing connection and fitting at a time, then remove and replace the worn valve.

   If necessary, carefully loosen stuck valves by prying side to side using a small screwdriver through the center hole of the valve.
4. Install new check valves in each location.

IMPORTANT: *Note correct orientation of each check valve.*

5. Install the new spring in the Injection Check Valve.



Depressurize and drain pipeline (or isolate I.C.V. point using valves) so that I.C.V. can safely be disassembled.

10.0 Checking Pump for Proper Zero Position (Stroke Knob)

1. With pump running, turn stroke knob counter-clockwise ↶ toward zero or end of black or red band on dial.

2. LISTEN to the clicking as the pump is running. The pump should operate quietly at the zero position (no clicking).

3. If the pump continues to click at zero or stops clicking before zero is reached, the pump zero must be reset (see Section 10.1 or 10.2).

10.1 Type I - Push on Knob Re-Zeroing and Stroke Knob Disassembly and Assembly

`

1. Remove stroke knob from the pump by grasping the knob firmly and pulling it toward you.

2. Pry off the yellow cap.

3. Place the knob on a flat surface.

4. Using needle-nose pliers, squeeze the inner section together while lifting the outer section up.

5. Push the inner section back onto the “D” shaped stroke shaft.

6. With the pump running, zero the pump by turning the inner section of the knob counter-clockwise ↶ until the pump stops clicking.

7. Position the outer section of the knob so that the pointer aligns with zero on the nameplate or end of the black or red band.

8. Push down on the outer section (a snap sound indicates parts are locked together).

9. Replace the yellow cap over the outer section of the knob, aligning the tabs on the cap with the slots inside the knob.

Stroke Knob Assembly (Type I)

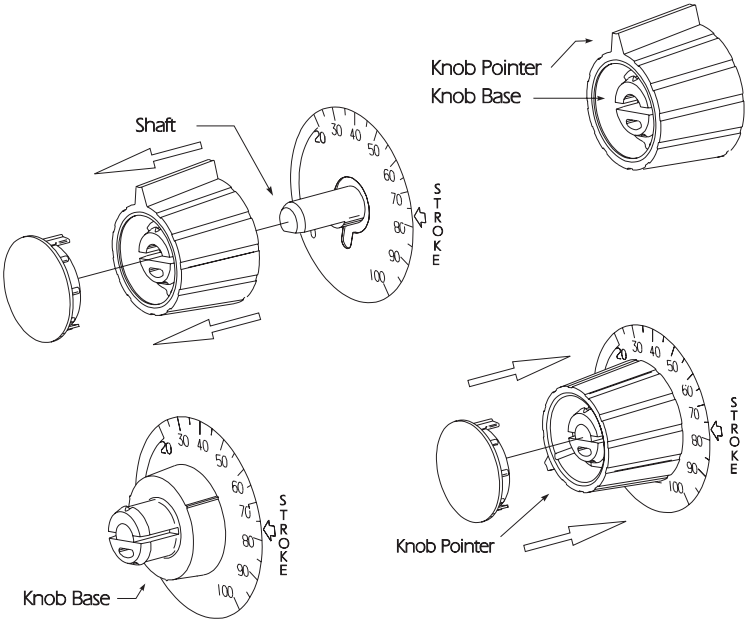

11.0 Troubleshooting

PROBLEM	POSSIBLE CAUSE
Pump Will Not Prime	1. Pump not turned on or plugged in.
	2. Output dials not set properly.
	3. Foot Valve not in vertical position on bottom of tank.
	4. Pump suction lift too high.
	5. Suction tubing is curved or coiled in tank.
	6. Fittings are over tightened.
	7. Air trap in suction valve tubing.
	8. Too much pressure at discharge. (Pumps without multi-function valve.)
Pump Loses Prime	1. Solution container ran dry.
	2. Foot Valve is not in a vertical position on the bottom of the tank.
	3. Pump suction lift is too high.
	4. Suction tubing is curved or coiled in tank.
	5. Fittings are over tightened.
	6. Air trap in suction valve tubing.
	7. Air leak on suction side.

	SOLUTION
	1. Turn on pump/plug in pump.
	2. Always prime pump with speed at 80% and stroke at 100%.
	3. Foot Valve must be vertical (see Foot Valve Installation, Section 4.6).
	4. Maximum suction lift is 5 ft (1.5 m). Pumps with High Viscosity Liquid Handling Assemblies require flooded suction.
	5. Suction tubing must be vertical. Use LMI tubing straightener supplied with pump (see Section 4.6).
	6. Do not overtighten fittings. This causes seal rings to distort and not seat properly which causes pump to leak back or lose prime.
	7. Suction tubing should be as vertical as possible. AVOID FALSE FLOODED SUCTION! (see Section 4.2.1).
	8. Shut off valves in pressurized line. Disconnect tubing at injection check valve (see Priming Section 6.0). When pump is primed, reconnect discharge tubing.
	1. Refill container with solution and reprime (see Section 6.0).
	2. Foot Valve must be vertical (see Foot Valve Installation, Section 4.6).
	3. Maximum suction lift is 5 ft (1.5 m). Pumps with High Viscosity Liquid Handling Assemblies require flooded suction.
	4. Suction tubing must be vertical. Use LMI tubing straightener supplied with pump (see Section 4.6).
	5. DO NOT OVERTIGHTEN FITTINGS. This causes seal rings to distort and not seat properly which caused pump to leak back or lose prime.
	6. Suction tubing should be as vertical as possible. AVOID FALSE FLOODED SUCTION! (see Section 4.2.1).
	7. Check for pinholes, cracks. Replace if necessary.

Troubleshooting (continued)

PROBLEM	POSSIBLE CAUSE
Leakage at tubing	1. Worn tubing ends.
	2. Loose or cracked fitting.
	3. Worn seal rings.
	4. Solution attacking Liquid Handling Assembly material.
Low Output or Failure to Pump Against Pressure	1. Pump's maximum pressure rating is exceeded by injection pressure.
	2. Worn Seal Rings.
	3. Ruptured Liquifram™.
	4. Incorrect stroke length.
	5. Tubing run on discharge may be too long.
	6. Clogged Foot Valve strainer.
Failure to Run	1. Pump not turned on or plugged in.
	2. EPU failure.
	3. Pulser failure.
Excessive Pump Output	1. Syphoning. (Pumping downhill without a multi-function valve).
	2. Little or no pressure at injection point.
	3. Excessive strokes per minute.

	SOLUTION
	1. Cut about 1 in (25 mm) off tubing and then replace as before.
	2. Replace fitting if cracked. Carefully hand tighten fittings. *DO NOT USE PIPE WRENCH.* Once fitting comes into contact with seal ring, tighten an additional 1/8 or 1/4 turn.
	3. Replace balls and seal rings (see Section 8.3) Spare Parts (SP-#).
	4. Consult your local distributor for alternate materials.
	1. Injection pressure cannot exceed pump's maximum pressure. See pump data plate.
	2. Worn seal rings or cartridge valves may need replacement (see Section 9.3). Spare Parts (SP- #), or RPM Pro Pac™ kit.
	3. Replace Liquifram™ (see Section 9.2).
	4. Check zero on pump/Re-zero pump (see Section 10.0).
	5. Longer tubing runs may create frictional losses sufficient to reduce pump's pressure rating. Consult factory for more information.
	6. Remove Foot Valve strainer when pumping slurries or when solution particles cause strainer to clog.
	1. Turn on or plug in pump.
	2. Disassemble pump and measure the resistance of the EPU across the EPU wires. Resistance reading should be in accordance to the EPU Resistance Chart (see Section 12.0). Also, check EPU leads to ground. Consult supplier or factory.
	3. The pulser should be replaced if EPU checks out OK. Consult supplier or factory.
	1. Move injection point to a pressurized location or install an LMI 4-FV (see Section 4.4).
	2. If pressure at injection point is less than 25 psi (1.7 Bar), an LMI 4-FV should be installed (see Section 4.4).
	3. Replace pulser or resistor. Consult factory.

12.0 EPU Resistance Chart

Pump Series	Voltage	Coil Resistance (Ohms) @ 20° C (68° F)*
PW4, PW5, PW6 P04, P05, P06 P14, P15 P16 P74, P75, P76	115 VAC 230 VAC	76 - 87 307 - 353
(see Note 1) P02, P03 P12, P13	115 VAC 230 VAC	152 - 176 583 - 671
(see Note 2) AA14, AA74, AA94 AA15, AA75, AA95 AA16, AA76, AA96 AA17, AA77, AA97 P02, P03 P12, P13	115 VAC 230 VAC	76- 87 291- 335
J54D, J55D, J56D	12 VDC	1.1 - 1.3
E70, E71, E72, E73, E74	115 VAC 230 VAC	22.8 - 26.2 91 - 105
B11, B12, B13, B14 B71, B72, B73, B74, B91, B92, B93, B84	115 VAC 230 VAC	43 - 49 167 - 193
C10, C11, C12, C13, C14 C70, C71, C72, C73, C74 C90, C91, C92, C93, C94	115 VAC 230 VAC	22.8 - 26.2 91 - 105
C76, C77, C78	115 VAC 230 VAC	14.4 - 16.6 57.7 - 66.3

* Let pump cool down completely before checking resistance. EPU checked within 10 hours of operation can increase coil resistance reading as much as 20%.

NOTES:

1. Pumps with serial numbers **LOWER** than: **960113429**
2. Pumps with serial numbers **HIGHER** than: **960113429**

LMI MILTON ROY

201 Ivyland Road
Ivyland, PA 18974
TEL: (215) 293-0401
FAX: (215) 293-0445
http://www.lmipumps.com

© 2001 Milton Roy Company - All Rights Reserved
Printed in USA
Specifications subject to change without notice.

Liquifram, Liquitron, Micropace, and Pro Pac are trademarks of Milton Roy Company, Teflon is a registered trademark of E. I. du Pont de Nemours & Co., Inc.

ITT

Wastewater

Goulds Pumps

Wastewater Pumps

Dewatering, Effluent and Sewage

Installation, Operation and Maintainence Instructions

GOULDS PUMPS

Goulds Pumps is a brand of ITT Water Technology, Inc.
- a subsidiary of ITT Industries, Inc.

www.goulds.com

Engineered for life

Table of Contents

SUBJECT	PAGE
Safety Instructions	3
Pre-Installation Checks	3
Lifting of Pump	3
Optional Guide Rail or Lift-Out System	3
Piping	4
Wiring and Grounding	4
Selecting and Wiring Pump Control Panels and Switches	4-5
Installation	5
Operation	5-6
Float Switch and Panel Chart	6
Three Phase Power Unbalance	7
Insulation Resistance Readings	7
Engineering Data	8
Troubleshooting	9
Typical Installations	10
Limited Warranty	11

Owner's Information

Pump Model Number: _____

Pump Serial Number: _____

Control Model Number: _____

Dealer: _____

Dealer Phone No. _____

Date of Purchase: _____ Installation: _____

Current Readings at Startup:

1Ø	3Ø	L1-2	L2-3	L3-1
Amps: _____	Amps: _____	_____	_____	_____
Volts: _____	Volts: _____	_____	_____	_____

SAFETY INSTRUCTIONS

TO AVOID SERIOUS OR FATAL PERSONAL INJURY OR MAJOR PROPERTY DAMAGE, READ AND FOLLOW ALL SAFETY INSTRUCTIONS IN MANUAL AND ON PUMP.

THIS MANUAL IS INTENDED TO ASSIST IN THE INSTALLATION AND OPERATION OF THIS UNIT AND MUST BE KEPT WITH THE PUMP.

This is a **SAFETY ALERT SYMBOL.** When you see this symbol on the pump or in the manual, look for one of the following signal words and be alert to the potential for personal injury or property damage.

⚠ DANGER Warns of hazards that **WILL** cause serious personal injury, death or major property damage.

⚠ WARNING Warns of hazards that **CAN** cause serious personal injury, death or major property damage.

⚠ CAUTION Warns of hazards that **CAN** cause personal injury or property damage.

NOTICE: INDICATES SPECIAL INSTRUCTIONS WHICH ARE VERY IMPORTANT AND MUST BE FOLLOWED.

THOROUGHLY REVIEW ALL INSTRUCTIONS AND WARNINGS PRIOR TO PERFORMING ANY WORK ON THIS PUMP.

MAINTAIN ALL SAFETY DECALS.

⚠ WARNING All electrical work must be performed by a qualified technician. Always follow the National Electrical Code (NEC), or the Canadian Electrical Code, as well as all local, state and provincial codes. Code questions should be directed to your local electrical inspector. Failure to follow electrical codes and OSHA safety standards may result in personal injury or equipment damage. Failure to follow manufacturer's installation instructions may result in electrical shock, fire hazard, personal injury or death, damaged equipment, provide unsatisfactory performance, and may void manufacturer's warranty.

⚠ WARNING Standard units are not designed for use in swimming pools, open bodies of water, hazardous liquids, or where flammable gases exist. These fluids and gases may be present in containment areas. Tank or wetwell must be vented per local codes.

Only pumps specifically Listed for Class 1, Division 1 are allowable in hazardous liquids and where flammable gases may exist. *See specific pump catalog bulletins or pump nameplate for all agency Listings*.

⚠ WARNING Disconnect and lockout electrical power before installing or servicing any electrical equipment. Many pumps are equipped with automatic thermal overload protection which may allow an overheated pump to restart unexpectedly.

⚠ CAUTION All three phase (3Ø) control panels for submersible pumps must provide Class 10, quick-trip, overload protection.

PRE-INSTALLATION CHECKS

Open all cartons and inspect for shipping damage. Report any damage to your supplier or shipping carrier immediately.

Important: Always verify that the pump nameplate Amps, Voltage, Phase and HP ratings match your control panel and power supply.

Many of our sewage pumps are oil-filled. If there are any signs of oil leakage or if the unit has been stored for an extended period check the oil level in the motor dome and the seal housing, if so equipped.

Check the motor cover oil level through the pipe plug on top of the unit. The motor chamber oil should just cover the motor. Do not overfill, leave room for expansion!

To check the seal housing oil level, where used, lay the unit on its side with the fill plug at 12 o'clock. Remove the plug. The oil should be within ½" (13mm) of the top. If low, refill with an ASTM 150 turbine oil. Replace the plug.

Oil is available in 5 gallon cans through our distributors. You can also source oil locally at motor repair shops. Typical oil brands are: Shell Turbo 32, Sunoco Sunvis 932, Texaco Regal R&O 32, Exxon Nuto 32 and Mobil DTE Light.

Check the strain relief nut on power cable strain assemblies. Power cables should be torqued to 75 in. lbs. for #16 cables and 80 in. lbs. for all other cable assemblies. Seal/heat sensor cables, where used, should be torqued to 75 in. lbs.

Warranty does not cover damage caused by connecting pumps and controls to an incorrect power source (voltage/phase supply).

Record the model numbers and serial numbers from the pumps and control panel on the front of this instruction manual for future reference. Give it to the owner or affix it to the control panel when finished with the installation.

LIFTING OF PUMP

⚠WARNING



Hazardous voltage can shock, burn or cause death.

DO NOT LIFT, CARRY OR HANG PUMP BY THE ELECTRICAL CABLES. DAMAGE TO THE ELECTRICAL CABLES CAN CAUSE SHOCK, BURNS OR DEATH.

Lift the pump with an adequately sized chain or cable attached to the lifting eye bolt. **DO NOT** damage electrical and sensor cables while raising and lowering unit.

OPTIONAL GUIDE RAIL OR LIFT-OUT SYSTEM

In many effluent and sewage basins or lift stations it is advisable to install the pump on a guide rail system or on a lift-out adapter to facilitate installation and removal for inspection and/or service. Most codes do not allow personnel to enter a wetwell without the correct protective equipment and training. Guide rails are designed to allow easy removal of the pump without the need for entry into the wetwell or need to disturb piping. The guide rail or lift-out adapter should locate the pump opposite the influent

opening preventing stagnate areas where solids can settle. The basin or pit must be capable of supporting the weight of the pump and guide rail. The pit floor must be flat.

NOTICE: FOLLOW THE INSTRUCTIONS THAT ARE PROVIDED WITH THE GUIDE RAIL ASSEMBLY.

PIPING

Discharge piping should be no smaller than the pump discharge diameter and kept as short as possible, avoiding unnecessary fittings to minimize friction losses.

Install an adequately sized check valve matched to the solids handling capability of the pump to prevent fluid backflow. Backflow can allow the pump to "turbine" backwards and may cause premature seal and/or bearing wear. If the pump is turning backwards when it is called on to start the increased torque may cause damage to the pump motor and/or motor shaft and some single-phase pumps may actually run backwards.

Install an adequately sized gate valve **AFTER** the check valve for pump, plumbing and check valve maintenance.

Important – Before pump installation. Drill a $\frac{3}{16}$" (4.8mm) relief hole in the discharge pipe. It should be located within the wetwell, 2" (51mm) above the pump discharge but below the check valve. The relief hole allows any air to escape from the casing. Allowing liquid into the casing will insure that the pump can start when the liquid level rises. Unless a relief hole is provided, a bottom intake pump could "air lock" and will not pump water even though the impeller turns.

All piping must be adequately supported, so as not to impart any piping strain or loads on the pump.

The pit access cover must be of sufficient size to allow for inspection, maintenance and crane or hoist service.

WIRING AND GROUNDING

Important notice: Read Safety Instructions before proceeding with any wiring.

⚠ Use only stranded copper wire to pump/motor and ground. The ground wire must be at least as large as the power supply wires. Wires should be color coded for ease of maintenance and troubleshooting.

⚠ Install wire and ground according to the National Electrical Code (NEC), or the Canadian Electrical Code, as well as all local, state and provincial codes.

⚠ Install an all leg disconnect switch where required by code.

⚠ Disconnect and lockout electrical power before performing any service or installation.

⚠ The electrical supply voltage and phase must match all equipment requirements. Incorrect voltage or phase can cause fire, motor and control damage, and voids the warranty.

⚠ All splices must be waterproof. If using splice kits follow manufacturer's instructions.

⚠ WARNING Select the correct type and NEMA grade junction box for the application and location. The junction box must insure dry, safe wiring connections.

⚠ WARNING Seal all controls from gases present which may damage electrical components.

⚠WARNING Hazardous voltage

FAILURE TO PERMANENTLY GROUND THE PUMP, MOTOR AND CONTROLS BEFORE CONNECTING TO POWER CAN CAUSE SHOCK, BURNS OR DEATH.

SELECTING AND WIRING PUMP CONTROL PANELS AND SWITCHES

FLOAT SWITCH TYPES

There are two basic float switch designs; single-action and wide-angle. Single-action switches operate over a range of 15° so they open and close quickly. Wide-angle floats operate over a 90° swing with the tether length between the float body and the pivot point controlling the On-Off range. The design determines how many floats are required with different systems or controls.

Floats may be normally open (NO) for pump down applications or to empty a tank. Normally closed (NC) switches are used to pump up or to fill a tank.

A single-action control switch may be used only with a control panel, never direct connected to a pump.

The wide-angle, pump down switches may be used as direct connected pump switches or as control switches.

SETTING THE FLOAT SWITCHES

There are no absolute rules for where to set the float switches, it varies from job to job.

Suggested Rules to Follow:
All floats should be set below the Inlet pipe!

Off Float: Best: set so the water level is always above the top of the pump (motor dome). **Next Best:** set so the water level is not more than 6" below the top of the pump.

On Float: set so the volume of water between the On and Off floats allows pumps of 1½ HP and under to operate for 1 minute minimum. Two (2) HP and larger pumps should run a minimum of 2 minutes. Basin literature states the gallons of storage per inch of basin height.

Lag/Alarm Float(s): should be staggered above the Off and On floats. Try to use most of the available storage provided by the basin, save some space for reserve storage capacity. *See Diagrams and Charts in Float Switch Chart Section.*

PANEL WIRING DIAGRAMS

Our control panels are shipped with instructions and wiring diagrams. Use those instructions in conjunction with this IOM. Electrical installation should be performed only by qualified technicians. Any problem or questions pertaining to another brand control must be referred to that control supplier or manufacturer. Our technical people have no technical schematics or trouble shooting information for other companies' controls.

ALARMS

We recommend the installation of an alarm on all Wastewater pump installations. Many standard control panels come equipped with alarm circuits. If a control panel is not used, a stand alone high liquid level alarm is available. The alarm alerts the owner of a high liquid level in the system so they can contact the appropriate service personnel to investigate the situation.

SINGLE PHASE PUMPS
Single phase (1Ø) pumps may be operated using a piggyback or hard wired float switch, a contactor, or a Simplex or Duplex control panel. *See Figures 1, 2 and 5*.

All 1/3 and ½ HP, 115 or 230 volt pumps, and some ¾ and 1 HP pumps, are supplied with plug style power cords. They may be plugged into piggyback float switches for simple installations. It is allowable to remove the plugs in order to hardwire or connect to a Simplex or Duplex controller. Removing the plug neither voids the warranty nor violates the agency Listings. *See Figure 5*.



PLUG-CONNECTED UNITS MUST BE CONNECTED TO A PROPERLY GROUNDED, GROUNDING TYPE RECEPTACLE.

ON NON-PLUG UNITS, DO NOT REMOVE CORD AND STRAIN RELIEF. DO NOT CONNECT CONDUIT TO PUMP.

Pumps with bare lead power cords can be hard-wired to a float switch, wired to a 1Ø contactor, a Simplex controller or a Duplex controller. Always verify that the float switch is rated for the maximum run amperage, maximum starting amperage, and the HP rating on the pump. Single-phase wastewater pumps contain on-winding overloads, unless noted on the pump nameplate. *See Figures 1 and 2*.

THREE PHASE PUMPS:
As a Minimum a 3Ø pump requires a 3 pole circuit breaker/fused circuit, an across the line magnetic starter rated for the pump HP, and ambient compensated Quick Trip Class 10 overloads.

SINGLE AND THREE PHASE CONTROL PANELS:
Control panels are available as Simplex (controls 1 pump) or Duplex (controls 2 pumps). Our standard SES Series Panels are available with many standard features and can be built with our most popular options. We also custom build panels which offer many more design options than the SES panels. Custom control panels are available in many different configurations. Custom panel quote requests may be forwarded to Customer Service through any authorized distributor.

Our "SES" Duplex panels feature a solid-state printed circuit board design with standard high level alarm circuits. Other standard features are: an auxiliary dry alarm contact for signaling a remote alarm and float switch position indicator lights. Our 3Ø panels have built-in, adjustable, Class 10 overloads. The adjustable overloads on all our 3Ø panels mean less labor for the installer and no need to order specific overloads. Most SES panels are in stock for immediate delivery.

On pumps equipped with seal fail and/or heat (high temperature) sensors it is recommended that you use our control panel with the appropriate options. The pump sensors do not function without a seal fail relay or terminal connection in the control panel and a warning device such as a bell, horn or light.

Seal Failure Circuit - Some dual seal pumps are equipped with a standard, built-in seal failure circuit, which may also be called a moisture detection circuit. This circuit must be connected to a control panel with an optional seal fail relay. The panel must be special ordered with the seal fail relay and alarm. There are also stand alone seal fail panels such as the A4-3 or A4-4 available as standard items. The pumps can be identified by an extra control cable exiting the motor cover. The cable contains two wires, a black wire, connects to panel "terminal" going to "probe"; and a white wire, connects to the panel "terminal" going to the relay ground. Do not connect to the panel ground screw. Follow the wiring instructions supplied with the panel.

Heat Sensor and Seal Failure Circuit - Some pumps are equipped with a seal fail and normally closed, on-winding high temperature thermostats (heat sensors). The pumps have a control cable with four (4) leads, black (probe) and green (relay ground) for the seal fail circuit and red and white for the high temperature circuit. Connect the high temperature (heat sensor) circuit to the panel terminal strip as indicated on the panel drawing using the red and white wires. The high temperature panel circuit is also an optional item which you must specifically order when you order your control panel. The high temperature circuit is different from the Class 10 overloads which are always required on three phase pumps. *Follow the wiring instructions supplied with the panel*.

INSTALLATION

Connect the pump(s) to the guide rail pump adapters or to the discharge piping. Slide rail bases should be anchored to the wetwell floor.

Complete all wiring per the control panel wiring diagrams and NEC, Canadian, state, provincial and/or local codes. This a good time to check for proper rotation of the motors/impellers.



DO NOT PLACE HANDS IN PUMP SUCTION WHILE CHECKING MOTOR ROTATION. TO DO SO WILL CAUSE SEVERE PERSONAL INJURY.

Always verify correct rotation. Correct rotation is indicated on the pump casing. Three phase motors are reversible. It is allowable to bump or jog the motor for a few seconds to check impeller rotation. It is easier to check rotation before installing the pump. Switch any two power leads to reverse rotation.

Lower the pump(s) into the wetwell.

Check to insure that the floats will operate freely and not contact the piping.

OPERATION

Once the piping connections are made and checked you can run the pumps.

Piggyback Switch Operation – Plug the piggyback switch into a dedicated grounded outlet and then plug the pump into the switch. Test the pump by filling the wetwell until the pump goes On. If the pumps run but fail to pump, they are probably air locked, drill the relief holes per the instructions in the Piping Section.

Check the operating range to insure a minimum one minute run time and that the pump goes Off in the correct position.

Control Panel Operation – Fill the wetwell with clear water.

Use the pump H-O-A (Hand-Off-Automatic) switches in Hand to test the pumps. If they operate well in Hand proceed to test Automatic operation. If the pumps run but fail to pump, they are probably air locked, drill the relief holes per the instructions in the Piping Section.

Place Control Panel switch(es) in Automatic position and thoroughly test the operation of the ON, OFF, and Alarm floats by filling the wetwell with clear water. **Important:** Failure to provide a Neutral from the power supply to a 1Ø, 230 volt Control Panel will not allow the panel control circuit to operate. The Neutral is necessary to complete the 115 volt control circuit.

Check voltage and amperage and record the data on the front of this manual for future reference. Compare the amperage readings to the pump nameplate maximum amperage. If higher than nameplate amperage investigate cause. Operating the pump off the curve, i.e. with too little head or with high or low voltage will increase amperage. The motor will operate properly with voltage not more than 10% above or below pump nameplate ratings. Performance within this range will not necessarily be the same as the published performance at the exact rated nameplate frequency and voltage. Correct the problem before proceeding. Three phase unbalance is also a possible cause. *See Three Phase Power Unbalance and follow the instructions*.

Reset the Alarm circuit, place pump switch(es) in the Automatic position and Control Switch in ON position. The system is now ready for automatic operation.

Explain the operation of the pumps, controls and alarms to the end user. Leave the paperwork with the owner or at the control panel if in a dry, secure location.

FLOAT SWITCH AND PANEL CHART

The purpose of this chart is to show the required switch quantities and the function of each switch in a typical wastewater system. The quantities required vary depending on the switch type, single-action or wide-angle. Switch quantities also vary by panel type: simplex with and without alarms, and duplex with alarms.

Duplex Panels using single-action switches:

Three Float Panel Wiring

SW1	Bottom	Pumps Off
SW2	Middle	1st Pump On
SW3	Top	2nd Pump & Alarm On

Four Float Panel Wiring ②

SW1	Bottom	Pumps Off
SW2	2nd	1st Pump On
SW3	3rd	2nd Pump On
SW4	Top	Alarm On

Duplex Panels using wide-angle switches:

Three Float Panel Wiring

SW1	Bottom	1st Pump On/Both Off
SW2	Top	2nd Pump & Alarm On

Four Float Panel Wiring

SW1	Bottom	1st Pump On/Both Off
SW2	Middle	2nd Pump On
SW3	Top	Alarm On

Simplex Panel using single-action switches:

Simplex Panel with Alarm ①

SW1	Bottom	Pump Off
SW2	Middle	Pump On
	SW3	Top Alarm On/Off

Simplex Panel with No Alarm

SW1	Bottom	Pump Off
SW2	Top	Pump On

Simplex Panel using wide-angle switches:

Simplex Panel with Alarm

SW1	Bottom	Pump On/Off
SW2	Top	Alarm On/Off

Simplex Panel with No Alarm

SW1	Pump On/Off

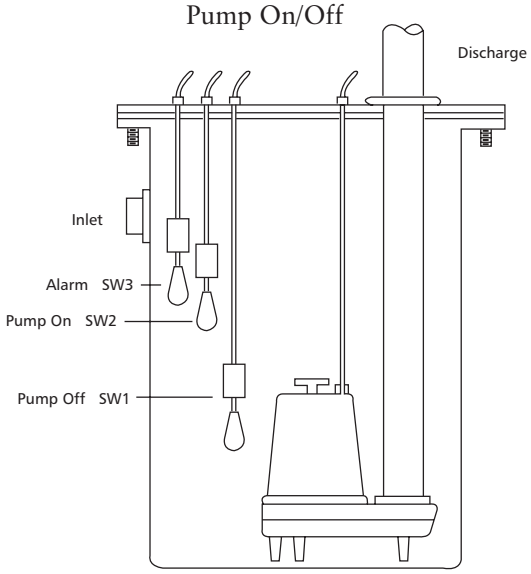

Simplex ①

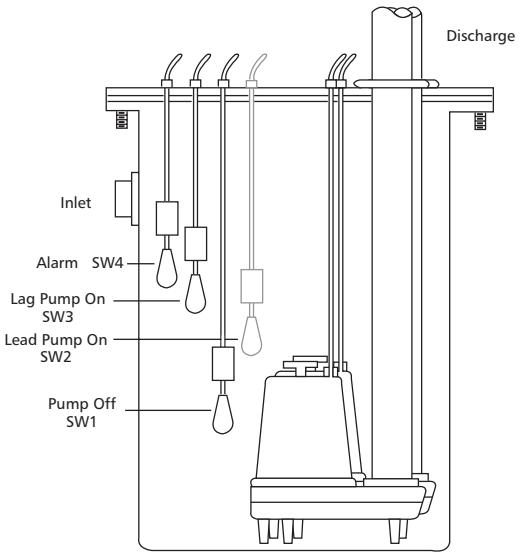

Duplex ②

THREE PHASE POWER UNBALANCE

A full three phase supply consisting of three individual transformers or one three phase transformer is recommended. "Open" delta or wye connections using only two transformers can be used, but are more likely to cause poor performance, overload tripping or early motor failure due to current unbalance.

Check the current in each of the three motor leads and calculate the current unbalance as explained below.

If the current unbalance is 2% or less, leave the leads as connected.

If the current unbalance is more than 2%, current readings should be checked on each leg using each of the three possible hook-ups. Roll the motor leads across the starter in the same direction to prevent motor reversal.

To calculate percent of current unbalance:

A. Add the three line amp values together.

B. Divide the sum by three, yielding average current.

C. Pick the amp value which is furthest from the average current (either high or low).

D. Determine the difference between this amp value (furthest from average) and the average.

E. Divide the difference by the average. Multiply the result by 100 to determine percent of unbalance.

Current unbalance should not exceed 5% at service factor load or 10% at rated input load. If the unbalance cannot be corrected by rolling leads, the source of the unbalance must be located and corrected. If, on the three possible hookups, the leg farthest from the average stays on the same power lead, most of the unbalance is coming from the power source.

Contact your local power company to resolve the imbalance.

	Hookup 1			Hookup 2			Hookup 3		
Starter Terminals	L1	L2	L3	L1	L2	L3	L1	L2	L3
Motor Leads	R	B	W	W	R	B	B	W	R
	T3	T1	T2	T2	T3	T1	T1	T2	T3

Example:

T3-R = 51 amps	T2-W = 50 amps	T1-B = 50 amps
T1-B = 46 amps	T3-R = 48 amps	T2-W = 49 amps
T2-W = 53 amps	T1-B = 52 amps	T3-R = 51 amps
Total = 150 amps	Total = 150 amps	Total = 150 amps
÷ 3 = 50 amps	÷ 3 = 50 amps	÷ 3 = 50 amps
– 46 = 4 amps	– 48 = 2 amps	– 49 = 1 amps
4 ÷ 50 = .08 or 8%	2 ÷ 50 = .04 or 4%	1 ÷ 50 = .02 or 2%

INSULATION RESISTANCE READINGS

Normal Ohm and Megohm Values between all leads and ground

Condition of Motor and Leads	Ohm Value	Megohm Value
A new motor (without drop cable).	20,000,000 (or more)	20 (or more)
A used motor which can be reinstalled in well.	10,000,000 (or more)	10 (or more)
Motor in well. Readings are for drop cable plus motor.		
New motor.	2,000,000 (or more)	2 (or more)
Motor in good condition.	500,000 - 2,000,000	.5 - 2
Insulation damage, locate and repair.	Less than 500,000	Less than .5

Insulation resistance varies very little with rating. Motors of all HP, voltage and phase ratings have similar values of insulation resistance.

Insulation resistance values above are based on readings taken with a megohmmeter with a 500V DC output. Readings may vary using a lower voltage ohmmeter, consult factory if readings are in question.

Engineering data for specific models may be found in your catalog and on our website (address is on the cover).

Control panel wiring diagrams are shipped with the control panels. Please use the control panel drawings in conjunction with this instruction manual to complete the wiring.

PUMP OPERATION			
Minimum Submergence		**Maximum Fluid Temperature**	
Continuous Duty	Fully Submerged	Continuous Operation	104º F 40º C
Intermittent Duty	6" Below Top of Motor	Intermittent Operation	140º F 60º C

Pumpmaster and Pumpmaster Plus - Hard Wired

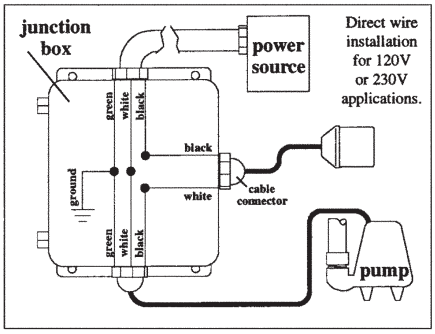

Figure 1

Single-Action Float Switch "Typical" Installation

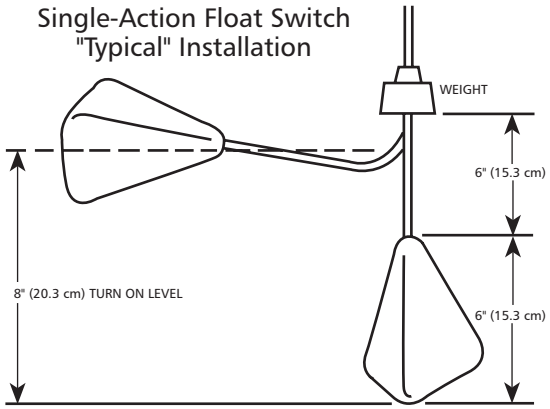

Figure 4

Double Float - Hard Wired

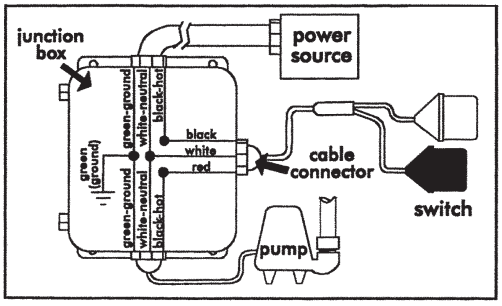

Figure 2

Wide-Angle Float Switch

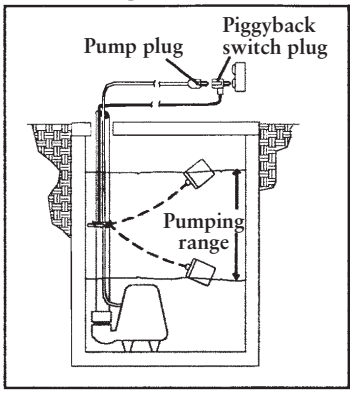

Figure 5

Determining Pumping Range

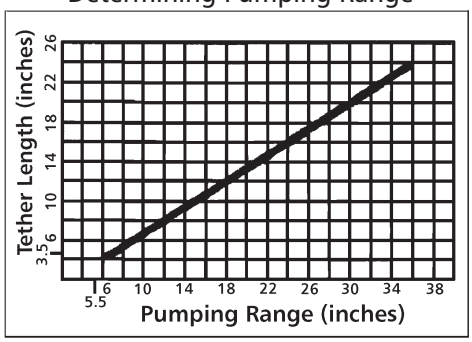

Figure 3

Three Phase Connection Diagram

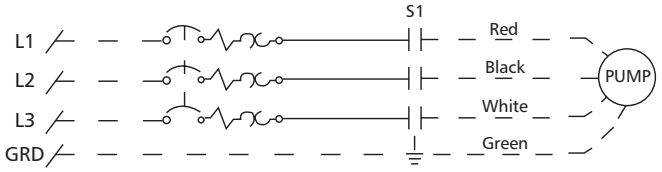

Figure 6

⚠WARNING
Hazardous voltage

FAILURE TO DISCONNECT AND LOCKOUT ELECTRICAL POWER BEFORE ATTEMPTING ANY SERVICE CAN CAUSE SHOCK, BURNS OR DEATH.

SYMPTOM	PROBABLE CAUSE	RECOMMENDED ACTION
MOTOR NOT RUNNING	Motor thermal protector tripped.	Allow motor to cool. Insure minimum pump submergence. Clear debris from casing and impeller.
NOTE: If circuit breaker "OPENS" repeatedly, **DO NOT** reset. Call qualified electrician.	Open circuit breaker or blown fuse.	Determine cause, call a qualified electrician.
	Pump impeller binding or jammed.	Check motor amp draw. If two or more times higher than listed on pump nameplate, impeller is locked, motor bearings or shaft is damaged. Clear debris from casing and impeller, consult with dealer.
a) Manual operation	Power cable is damaged.	
	Inadequate electrical connection in control panel.	
b) Automatic operation	No neutral wire connected to control panel.	Resistance between power leads and ground should read infinity. If any reading is incorrect, call a qualified electrician.
	Inadequate electrical connection in control panel.	Inspect control panel wiring. Call a qualified electrician.
NOTE: Check the pump in manual mode first to confirm operation. If pump operates, the automatic control or wiring is at fault. If pump does not operate, see above.	Defective liquid level switch.	With switch disconnected, check continuity while activating liquid level switch. Replace switch, as required.
	Insufficient liquid level to activate controls.	Allow liquid level to rise 3" to 4" (76 mm - 101 mm) above turn-on level.
	Liquid level cords tangled.	Untangle cords and insure free operation.
PUMP WILL NOT TURN OFF	Liquid level cords tangled.	Untangle cords and insure free operation.
	Pump is air locked.	Shut off pump for approximately one minute, then restart. Repeat until air lock clears. If air locking persists in a system with a check valve, a $\frac{3}{16}$" (4.8 mm) hole may be drilled in the discharge pipe approximately 2" (51 mm) above the discharge connection.
	Influent flow is matching pump's discharge capacity.	Larger pump may be required.
LITTLE OR NO LIQUID DELIVERED BY PUMP	Check valve installed backwards, plugged or stuck closed.	Check flow arrow on valve and check valve operation.
	Excessive system head.	Consult with dealer.
	Pump inlet plugged.	Inspect and clear as required.
	Improper voltage or wired incorrectly.	Check pump rotation, voltage and wiring. Consult with qualified electrician.
	Pump is air locked.	See recommended action, above.
	Impeller is worn or damaged.	Inspect impeller, replace as required.
	Liquid level controls defective or improperly positioned.	Inspect, readjust or replace as required.
PUMP CYCLES CONSTANTLY	Discharge check valve inoperative.	Inspect, repair or replace as required.
	Sewage containment area too small.	Consult with dealer.
	Liquid level controls defective or improperly positioned.	Inspect, readjust or replace as required.
	Influent excessive for this size pump.	Consult with dealer.

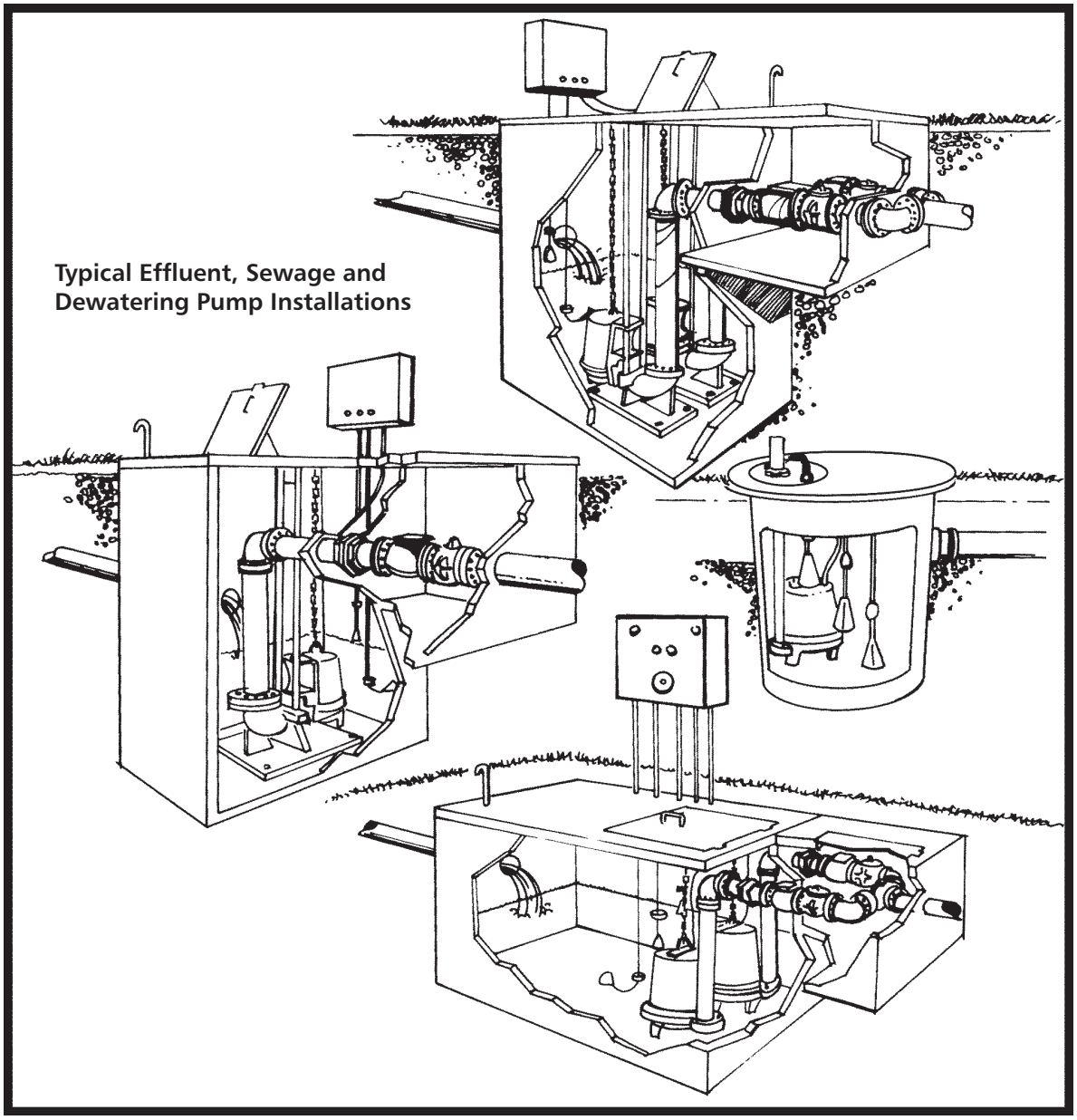
Typical Effluent, Sewage and
Dewatering Pump Installations

GOULDS PUMPS LIMITED WARRANTY

This warranty applies to all water systems pumps manufactured by Goulds Pumps.

Any part or parts found to be defective within the warranty period shall be replaced at no charge to the dealer during the warranty period. The warranty period shall exist for a period of twelve (12) months from date of installation or eighteen (18) months from date of manufacture, whichever period is shorter.

A dealer who believes that a warranty claim exists must contact the authorized Goulds Pumps distributor from whom the pump was purchased and furnish complete details regarding the claim. The distributor is authorized to adjust any warranty claims utilizing the Goulds Pumps Customer Service Department.

The warranty excludes:

(a) Labor, transportation and related costs incurred by the dealer;
(b) Reinstallation costs of repaired equipment;
(c) Reinstallation costs of replacement equipment;
(d) Consequential damages of any kind; and,
(e) Reimbursement for loss caused by interruption of service.

For purposes of this warranty, the following terms have these definitions:

(1) "Distributor" means any individual, partnership, corporation, association, or other legal relationship that stands between Goulds Pumps and the dealer in purchases, consignments or contracts for sale of the subject pumps.
(2) "Dealer" means any individual, partnership, corporation, association, or other legal relationship which engages in the business of selling or leasing pumps to customers.
(3) "Customer" means any entity who buys or leases the subject pumps from a dealer. The "customer" may mean an individual, partnership, corporation, limited liability company, association or other legal entity which may engage in any type of business.

THIS WARRANTY EXTENDS TO THE DEALER ONLY.

GOULDS PUMPS

Goulds Pumps and the ITT Engineered Blocks Symbol are registered trademarks and tradenames of ITT Industries Inc.

SPECIFICATIONS ARE SUBJECT TO CHANGE WITHOUT NOTICE.

IM107R03 March, 2006

© 2006 ITT Water Technology, Inc.

Engineered for life

Goulds Pumps

Bombas para aguas residuales, para extracción de agua, para efluente y para alcantarillado

Instrucciones de instalación, funcionamiento y mantenimiento

GOULDS PUMPS

Goulds Pumps es una marca de fábrica de ITT Water Technology, Inc. - un subsidiario de ITT Industries, inc.

www.goulds.com

Engineered for life

Índice

TEMA	PÁGINA
Instrucciones de seguridad	14
Verificaciones preliminares a la instalación	14
Levantamiento de la bomba	14
Riel corredizo o sistema de levantamiento opcional	15
Tuberías	15
Cableado y conexión a tierra	15
Selección y cableado de los interruptores y paneles de control de la bomba	15-16
Instalación	17
Operación	17
Tabla del panel e interruptores de flotador	18
Desbalance de potencia trifásica	19
Lecturas de resistencia de aislamiento	19
Datos de ingeniería	20
Instalaciones típicas	21
Identificación y resolución de problemas	22
Garantía limitada	23

Información del propietario

Número de modelo de la bomba: _____

Número de serie de la bomba: _____

Número de modelo del control: _____

Agente: _____

No. telefónico del agente: _____

Fecha de compra: _____ Instalación: _____

Lecturas actuales en el momento de la puesta en marcha:

1Ø		3Ø		L1-2	L2-3	L3-1
Amperios:	_____	Amperios:	_____	_____	_____	_____
Voltios:	_____	Voltios:	_____	_____	_____	_____

INSTRUCCIONES DE SEGURIDAD

PARA EVITAR LESIONES PERSONALES GRAVES O AÚN FATALES Y SERIOS DAÑOS MATERIALES, LEA Y SIGA TODAS LAS INSTRUCCIONES DE SEGURIDAD EN EL MANUAL Y EN LA BOMBA.

ESTE MANUAL HA SIDO CREADO COMO UNA GUÍA PARA LA INSTALACIÓN Y OPERACIÓN DE ESTA UNIDAD Y SE DEBE CONSERVAR JUNTO A LA BOMBA.

Éste es un **SÍMBOLO DE ALERTA DE SEGURIDAD**. Cuando vea este símbolo en la bomba o en el manual, busque una de las siguientes palabras de señal y esté alerta a la probabilidad de lesiones personales o daños materiales.

⚠ PELIGRO Advierte los peligros que **CAUSARÁN** graves lesiones personales, la muerte o daños materiales mayores.

⚠ ADVERTENCIA Advierte los peligros que **PUEDEN** causar graves lesiones personales, la muerte o daños materiales mayores.

⚠ PRECAUCIÓN Advierte los peligros que **PUEDEN** causar lesiones personales o daños materiales.

AVISO: INDICA INSTRUCCIONES ESPECIALES QUE SON MUY IMPORTANTES Y QUE SE DEBEN SEGUIR.

EXAMINE BIEN TODAS LAS INSTRUCCIONES Y ADVERTENCIAS ANTES DE REALIZAR CUALQUIER TRABAJO EN ESTA BOMBA.

MANTENGA TODAS LAS CALCOMANÍAS DE SEGURIDAD.

⚠ ADVERTENCIA Todo el trabajo eléctrico debe ser realizado por un técnico calificado. Siempre siga el Código Eléctrico de EE.UU. (NEC) o el Código Eléctrico Canadiense, además de todos los códigos locales, estatales y provinciales. Las preguntas acerca del código deben ser dirigidas al inspector eléctrico local. Si se hace caso omiso a los códigos eléctricos y normas de seguridad de OSHA, se pueden producir lesiones personales o daños al equipo. Si se hace caso omiso a las instrucciones de instalación del fabricante, se puede producir electrochoque, peligro de incendio, lesiones personales o aún la muerte, daños al equipo, rendimiento insatisfactorio y podría anularse la garantía del fabricante.

⚠ ADVERTENCIA Las unidades estándar no están diseñadas para usarse en albercas, masas abiertas de agua, líquidos peligrosos o donde existan gases inflamables. Estos fluidos y gases podrían estar presentes en áreas de contención. El tanque o pozo debe ser ventilado de acuerdo con los códigos locales.

En lugares con líquidos inflamables o donde pudiese haber gases inflamables sólo deben usarse bombas específicamente clasificadas para áreas de Clase 1, División 1. *Consulte los boletines de catálogos de bombas específicas o la placa de identificación de la bomba con respecto a las listas de agencias.*

⚠ ADVERTENCIA Desconecte y bloquee la corriente eléctrica antes de instalar o dar servicio a cualquier equipo eléctrico. Muchas bombas están equipadas con protección automática contra la sobrecarga térmica, la cual podría permitir que una bomba demasiado caliente rearranque inesperadamente.

⚠ PRECAUCIÓN Todos los paneles de control trifásicos (3Ø) para bombas sumergibles deben incluir protección contra sobrecarga de Clase 10, de disparo rápido.

VERIFICACIONES PRELIMINARES A LA INSTALACIÓN

Abra todas las cajas e inspeccione el equipo para determinar si se ocasionaron daños durante el envío. Notifique cualquier daño a su proveedor o a la compañía de transporte de inmediato.

Importante: Siempre verifique que las clasificaciones de corriente, tensión, fase y potencia en la placa de identificación de la bomba correspondan con las del panel de control y fuente de alimentación.

Muchas de nuestras bombas para alcantarillado están llenas con aceite. Si hay alguna señal de fuga de aceite o si la unidad estuvo almacenada durante largo tiempo, verifique el nivel de aceite en la cúpula del motor y la caja del sello, en caso de haberla.

Verifique el nivel de aceite de la cubierta del motor a través del tapón de la tubería en el extremo superior de la unidad. El aceite en la cámara del motor debe cubrir apenas el motor. ¡No llene en exceso, deje espacio para expansión!

Para verificar el nivel de aceite de la caja del sello, en caso que se use, coloque la unidad de lado con el tapón de llenado en la posición de las 12:00 horas. Retire el tapón. El aceite debe estar a menos de ½ pulg. (13 mm) del borde superior. Si el nivel está bajo, agregue aceite para turbinas ASTM 150. Reinstale el tapón.

Puede obtenerse aceite en latas de 5 galones de nuestros distribuidores. También puede obtener aceite a nivel local en talleres de reparación de motores. Las marcas típicas de aceite son: Shell Turbo 32, Sunoco Sunvis 932, Texaco Regal R&O 32, Exxon Nuto 32 y Mobil DTE Light.

Inspeccione la tuerca de alivio de tensión en los conjuntos de protección contra tirones de los cables de alimentación. Torsión de los cables de alimentación: 75 pulg.-lbs. para cables #16 y 80 pulg.-lbs. para todos los otros tipos de cable. La torsión de los cables de sensores de sello/calor, cuando se usen, debe ser de 75 pulg.-lbs.

La garantía no cubre daños causados por conectar bombas y controles a la fuente de energía incorrecta (fuente de tensión/fase).

Anote los números de modelos y números de serie de las bombas y del panel de control en la sección delantera de este manual de instrucciones para referencia futura. Entregue el manual al propietario o adjúntelo al panel de control una vez finalizada la instalación.

LEVANTAMIENTO DE LA BOMBA

⚠ ADVERTENCIA



Un voltaje peligroso puede producir golpes eléctricos, quemaduras o la muerte.

NO LEVANTE NI TRANSPORTE NI CUELGUE LA BOMBA DE LOS CABLES ELÉCTRICOS. EL DAÑO A LOS CABLES ELÉCTRICOS PUEDE PRODUCIR ELECTROCHOQUE, QUEMADURAS O AÚN LA MUERTE.

Levante la bomba con una cadena o cable de tamaño adecuado conectado al perno de ojo de levantamiento. **NO** dañe los cables eléctricos o de los sensores al subir y bajar la unidad.

RIEL CORREDIZO O SISTEMA DE LEVANTAMIENTO OPCIONAL

En muchos estanques de efluente y aguas negras o estaciones de levantamiento se recomienda instalar la bomba en un sistema de riel corredizo o sobre un adaptador de levantamiento para facilitar la instalación y retiro para inspección y/o servicio. La mayoría de los códigos no permiten que el personal entre al pozo sumidero sin el equipo de protección y la capacitación correctos. Los rieles corredizos están diseñados para facilitar el retiro de la bomba sin necesidad de entrar al pozo o perturbar la tubería. El riel corredizo o el adaptador de levantamiento debe situar la bomba opuesta a la abertura para el líquido de entrada, evitando las áreas estancadas donde pudiesen asentarse sólidos. El estanque o fosa debe ser capaz de soportar el peso de la bomba y del riel de deslizamiento. El piso de la fosa debe ser plano.

AVISO: SIGA LAS INSTRUCCIONES INCLUIDAS CON EL CONJUNTO DEL RIEL CORREDIZO.

TUBERÍAS

La tubería de descarga no debe ser más pequeña que el diámetro de descarga de la bomba y debe mantenerse lo más corta posible, evitando los accesorios innecesarios para reducir al mínimo las pérdidas por fricción.

Instale una válvula de retención de tamaño adecuado que corresponda con la capacidad de manejo de sólidos de la bomba para evitar el contraflujo de fluido. El contraflujo puede hacer que la bomba "gire" en dirección inversa, produciendo un desgaste prematuro del sello y/o del cojinete. Si la bomba gira en sentido inverso al arrancar, el aumento de torsión puede dañar el motor y/o el eje del motor de la bomba y algunas bombas monofásicas hasta podrían funcionar en sentido inverso.

Instale una válvula de compuerta de tamaño adecuado **DESPUÉS** de la válvula de retención para facilitar el mantenimiento de la bomba, las tuberías y la válvula de retención.

Importante – antes de instalar la bomba. Perfore un orificio de alivio de $^{3}/_{16}$ pulg. (4.8 mm) en la tubería de descarga. Debe situarse dentro del pozo, a 2 pulg. (51 mm) sobre la descarga de la bomba, pero debajo de la válvula de retención. El orificio de alivio permite el escape de aire de la carcasa. Al permitir que entre líquido a la carcasa se asegura que la bomba pueda arrancar cuando el nivel de líquido aumente. A menos que se proporcione un orificio de alivio, una bomba de toma inferior podría "obstruirse con aire" y no bombear agua, a pesar de que el impulsor gire.

Todas las tuberías deben estar apoyadas correctamente, de modo que no se apliquen esfuerzos o cargas de las tuberías a la bomba.

La cubierta de acceso a la fosa debe ser de tamaño suficiente para permitir realizar el servicio de inspección, mantenimiento y levantamiento con grúa o montacargas.

CABLEADO Y CONEXIÓN A TIERRA

Aviso importante: Lea las instrucciones de seguridad antes de proseguir con el cableado.

⚠ Use únicamente alambre trenzado de cobre para la bomba/motor y la conexión a tierra. El alambre de conexión a tierra debe ser al menos del mismo tamaño que los alambres de la fuente de alimentación. Los alambres deben codificarse con colores para facilitar el mantenimiento y la identificación y resolución de problemas.

⚠ Instale los cables y la conexión a tierra de acuerdo con el Código Eléctrico de EE.UU. (NEC) o el Código Eléctrico Canadiense, además de los códigos locales, estatales y provinciales.

⚠ Instale un desconectador de todos los circuitos donde el código lo requiera.

⚠ Desconecte y bloquee la corriente eléctrica antes de instalar o dar servicio.

⚠ La tensión y fase de la fuente de alimentación debe corresponder con todos los requerimientos del equipo. La tensión o fase incorrecta puede producir incendio, daño al motor o a los controles y anula la garantía.

⚠ Todos los empalmes debe ser impermeables. Si utiliza juegos de empalme, siga las instrucciones del fabricante.

⚠ADVERTENCIA Seleccione una caja de conexiones NEMA del tipo correcto para la aplicación y ubicación. La caja de conexiones debe garantizar conexiones de cableado seguras y secas.

⚠ADVERTENCIA Selle todos los controles de los gases presentes que pudiesen dañar los componentes eléctricos.

⚠ADVERTENCIA
Tensión peligrosa

LA FALLA DE CONECTAR A TIERRA PERMANENTEMENTE LA BOMBA, EL MOTOR Y LOS CONTROLES, ANTES DE CONECTAR LA CORRIENTE ELÉCTRICA, PUEDE CAUSAR ELECTROCHOQUE, QUEMADURAS O LA MUERTE.

SELECCIÓN Y CABLEADO DE LOS INTERRUPTORES Y PANELES DE CONTROL DE LA BOMBA

TIPOS DE INTERRUPTORES DE FLOTADOR

Hay dos tipos de diseños de interruptor de flotador: de acción simple y de ángulo amplio. Los interruptores de acción simple funcionan en un rango de 15º, de manera que pueden abrirse y cerrarse con rapidez. Los flotadores de ángulo amplio funcionan con un giro de 90º con el largo de la traba entre el cuerpo del flotador y el punto de pivote controlando al rango de encendido-apagado. El diseño determina cuántos flotadores se requieren con los diferentes sistemas o controles.

Los flotadores pueden estar normalmente abiertos (NO) para aplicaciones de reducción de nivel o para vaciar un tanque. Los interruptores normalmente cerrados (NC) se utilizan para aumentar el nivel o para llenar un tanque.

Un interruptor de control de acción simple sólo puede usarse con un panel de control, pero nunca directamente conectado a una bomba.

Los interruptores de ángulo ancho de reducción de nivel pueden usarse como interruptores directamente conectados a la bomba o como interruptores de control.

INSTALACIÓN DE LOS INTERRUPTORES DE FLOTADOR

No hay reglas absolutas acerca de dónde instalar los interruptores de flotador, varía de trabajo a trabajo.

Reglas sugeridas a seguir:
¡Todos los flotadores deben instalarse debajo de la tubería de entrada!

Flotador de apagado: Primera preferencia: instálelo de manera que el nivel del agua quede siempre sobre el extremo superior de la bomba (cúpula del motor). Segunda preferencia: instálelo de manera que el nivel del agua quede a no más de 6 pulg. por debajo del extremo superior de la bomba.

Flotador de encendido: instálelo de manera que el volumen de agua entre los flotadores de encendido y apagado permita bombas de 1½ HP y menores funcionar al menos 1 minuto. Las bombas de dos (2) HP y mayores deben funcionar al menos 2 minutos. La literatura sobre estanques establece los galones de almacenaje por pulgada de altura del estanque.

Flotador(es) de retardo/alarma: deben escalonarse sobre los flotadores de apagado y encendido. Trate de utilizar la mayoría del almacenaje disponible ofrecido por el estanque, ahorre espacio para la capacidad de almacenaje de reserva. *Consulte los diagramas y tablas en la Sección de Tablas de Interruptores de Flotador.*

DIAGRAMAS DE CABLEADO DEL PANEL
Nuestros paneles de control se envían con instrucciones y diagramas de cableado. Utilice dichas instrucciones en conjunto con este manual de instrucciones (IOM). La instalación eléctrica debe ser realizada por técnicos calificados únicamente. Cualquier problema o preguntas con respecto al control de otras marcas debe dirigirse a ese proveedor o al fabricante del control. Nuestro personal técnico no tiene diagramas esquemáticos técnicos o información de identificación y resolución de problemas de los controles de otras compañías.

ALARMAS
Recomendamos la instalación de una alarma en todas las bombas para aguas residuales. Muchos paneles de control estándar vienen equipados con circuitos de alarma. Si no se usa un panel de control, se ofrece una alarma por alto nivel de líquido independiente. La alarma alerta al propietario acerca de una situación de alto nivel de líquido en el sistema, de manera que pueda comunicarse con el personal de servicio apropiado para que investigue la situación.

BOMBAS MONOFÁSICAS
Las bombas monofásicas (1Ø) pueden operarse utilizando un interruptor de flotador en tándem o de conexión directa, un contactador o un panel de control simple o doble. *Ver las Figuras 1,2 y 5*.

Todas las bombas de ⅓ y ½ HP, de 115 ó 230 voltios y algunas bombas de ¾ y de 1 HP están equipadas con cables de alimentación estilo enchufe. Pueden enchufarse a interruptores de flotador en tándem para instalaciones sencillas. Se permite quitar los enchufes para conectar directamente o conectar a un controlador simple o doble. El retiro del enchufe no anula la garantía ni viola las aprobaciones de las agencias. *Ver la figura 5*.



LAS UNIDADES CON ENCHUFE DEBEN CONECTARSE A UN TOMACORRIENTES TIPO TIERRA CONECTADO CORRECTAMENTE A TIERRA.

EN EL CASO DE UNIDADES SIN ENCHUFE, NO QUITE EL CABLE NI EL PROTECTOR CONTRA TIRONES. NO CONECTE EL TUBO-CONDUCTO A LA BOMBA.

Las bombas con cables de alimentación con conductores desnudos pueden conectarse directamente a un interruptor de flotador, cablearse a un contactador de 1 fase, a un controlador simple o doble. Siempre verifique que el interruptor de flotador esté clasificado para el amperaje de funcionamiento máximo, amperaje de arranque máximo y la capacidad nominal de potencia de la bomba. Las bombas monofásicas para aguas residuales contienen sobrecargas de devanado de encendido, a menos que se especifique lo contrario en la placa de identificación de la bomba. *Ver las Figuras 1 y 2*.

BOMBAS TRIFÁSICAS:
Como mínimo, una bomba trifásica requiere un cortacircuitos/circuito con fusible trifásico, un arrancador magnético en la línea clasificado para la potencia de la bomba y sobrecargas Clase 10, de disparo rápido y compensación ambiental.

PANELES DE CONTROL MONOFÁSICOS Y TRIFÁSICOS:
Los paneles de control pueden ser simples (controlan 1 bomba) o dobles (controlan 2 bombas). Nuestros paneles Serie SES se ofrecen con muchas características estándar y pueden construirse con nuestras opciones más populares. También construimos paneles de acuerdo con las especificaciones del cliente, los cuales ofrecen muchas más opciones que los paneles SES. Los paneles de control construidos de acuerdo con las especificaciones del cliente se ofrecen en muchas configuraciones diferentes. Las solicitudes de cotizaciones para paneles a la medida pueden enviarse a Servicio a los Clientes mediante nuestro distribuidor autorizado.

Nuestros paneles "SES" dobles presentan un diseño de tablero de circuito impreso de estado sólido con circuitos de alarmas de alto nivel estándar. Otras características estándar son: un contacto de alarma seco auxiliar para señalizar una alarma remota y luces indicadoras de posición del interruptor de flotador. Nuestros paneles trifásicos tienen sobrecargas Clase 10 incorporadas y ajustables. Las sobrecargas ajustables en todos nuestros paneles trifásicos significa menos trabajo para el instalador y la eliminación de la necesidad de ordenar sobrecargas específicas. La mayoría de los paneles SES se mantienen en inventario para entrega inmediata.

En el caso de bombas equipadas con sensores de falla de sello y/o sensores de calor, se recomienda que use su panel de control con las opciones apropiadas. Los sensores de la bomba no funcionan sin un relé de falla de sello o una conexión terminal en el panel de control y un dispositivo de alarma tal como una campana, bocina o luz.

Circuito de falla de sello – Algunas bombas de sello doble están equipadas con un circuito de falla de sello que también se denomina circuito de detección de humedad. Este circuito debe estar conectado a un panel de control con un relé de falla de sello opcional. El panel debe ordenarse especialmente con el relé de falla de sello y la alarma. También hay paneles de falla de sello independientes como los A4-3 o A4-A disponibles como artículos estándar. Las bombas pueden identificarse por un cable de control adicional que sea de la tapa del motor. El cable contiene dos alambres, un alambre negro que se conecta al "terminal" del panel que va a la "sonda", y un alambre blanco que se conecta al "terminal" del panel que va a la tierra del relé. No los conecte al tornillo de tierra del panel. *Siga las instrucciones de cableado incluidas con el panel.*

Sensor de calor y circuito de falla de sello – Algunas bombas están equipadas con termostatos de falla de sello y de alta temperatura, de devanado de encendido, normalmente cerrados (sensores de calor). Las bombas tienen un cable de control con cuatro (4) conductores: negro (sonda) y verde (tierra del relé) para el circuito de falla del sello y rojo y blanco para el circuito de alta temperatura. Conecte el circuito de alta temperatura (sensor de calor) a la regleta de terminales del panel, tal como se indica en el dibujo del panel, con los alambres rojo y blanco. El circuito del panel de alta temperatura también es un artículo opcional que debe ordenar específicamente cuando ordene su panel de control. El circuito de alta temperatura es diferente de las sobrecargas Clase 10 que son siempre requeridas en las bombas trifásicas. *Siga las instrucciones de cableado incluidas con el panel.*

INSTALACIÓN

Conecte la(s) bomba(s) a los adaptadores de riel corredizo o a la tubería de descarga. Las bases del riel corredizo deben anclarse al piso del pozo.

Todas las conexiones deben realizarse de acuerdo con los diagramas de cableado del panel de control, el código eléctrico de EE.UU., el código canadiense y los códigos estatales, provinciales y/o locales. Éste es un buen momento para verificar la rotación apropiada de los motores/impulsores.



NO COLOQUE LAS MANOS EN LA SUCCIÓN DE LA BOMBA MIENTRAS VERIFICA LA ROTACIÓN DEL MOTOR. EL HACERLO PRODUCIRÁ GRAVES LESIONES PERSONALES.

Siempre verifique la rotación correcta. La rotación correcta se indica en la carcasa de la bomba. Los motores trifásicos son reversibles. Se permite arrancar brevemente o en marcha lenta el motor durante unos segundos para verificar la rotación del impulsor. Es más fácil verificar la rotación antes de instalar la bomba. Intercambie dos de los conductores de potencia cualquiera para invertir la rotación.

Baje la(s) bomba(s) al pozo sumidero.

Inspeccione para verificar que los flotadores funcionen libremente y que no hagan contacto con la tubería.

OPERACIÓN

Una vez que se hayan hecho y verificado las conexiones de las tuberías, se pueden poner en funcionamiento las bombas.

Operación de interruptor en tándem – Enchufe el interruptor en tándem a un tomacorrientes dedicado conectado a tierra y luego enchufe la bomba al interruptor. Pruebe la bomba llenando el pozo hasta que la bomba se active. Si las bombas funcionan pero no bombean, probablemente estén obstruidas con aire; perfore los orificios de alivio de acuerdo con las instrucciones en la Sección de Tuberías.

Verifique el intervalo de operación para asegurar un tiempo de funcionamiento mínimo de un minuto y que la bomba se apague en la posición correcta.

Operación del panel de control – Llene el pozo con agua limpia.

Utilice los interruptores H-O-A (manual – apagado – automático) de la bomba en la posición manual para probar las bombas. Si funcionan bien en la posición manual, pruebe la posición automática. Si las bombas funcionan pero no bombean, probablemente estén obstruidas con aire; perfore los orificios de alivio de acuerdo con las instrucciones en la Sección de Tuberías.

Coloque el (los) interruptor(es) del panel de control en la posición automática y pruebe minuciosamente el funcionamiento de los flotadores de ENCENDIDO, APAGADO y alarma llenando el pozo con agua limpia. **Importante:** Si no se proporciona un neutro desde la fuente de alimentación a un panel de control monofásico de 230 voltios, el circuito de control del panel no operará. Es necesario el neutro para completar el circuito de control de 115 voltios.

Verifique la tensión y la corriente y anote los datos en la sección delantera de este manual para referencia futura. Compare las lecturas de amperaje con el amperaje máximo indicado en la placa de identificación de la bomba. Si es más alto que el amperaje de la placa de identificación, investigue la causa. Si la bomba se hace funcionar fuera de la curva; es decir, con demasiado poca carga o con tensión alta o baja, aumentará el amperaje. El motor funcionará correctamente con tensión no más de un 10% por encima o por debajo de las clasificaciones en la placa de identificación de la bomba. El rendimiento dentro de este rango no será necesariamente igual al rendimiento publicado a la frecuencia y tensión exactas indicadas en la placa de identificación. Corrija el problema antes de continuar. También es posible que la causa sea un desbalance trifásico. *Consulte la sección de Desbalance de potencia trifásica y siga las instrucciones.*

Reposicione el circuito de alarma, coloque el (los) interruptor(es) de la bomba en posición automática y el interruptor de control en la posición de encendido. Ahora la unidad está lista para la operación automática.

Explique la operación de las bombas, controles y alarmas al usuario final. Entregue la documentación al propietario o déjela en un lugar seco y seguro en el panel de control.

TABLA DEL PANEL E INTERRUPTORES DE FLOTADOR

El propósito de esta tabla es mostrar las cantidades de interruptores requeridas y la función de cada interruptor en un sistema de aguas residuales típicas. Las cantidades requeridas varían dependiendo del tipo de interruptor: de acción simple o de ángulo amplio. Las cantidades de interruptores varían también de acuerdo con el tipo de panel: simple con y sin alarmas y doble con alarmas.

Paneles dobles utilizando interruptores de acción simple:

Cableado del panel de tres flotadores

SW1	Fondo	Bombas apagadas
SW2	Medio	Primera bomba del medio encendida
SW3	Extremo superior	Segunda bomba y alarma encendidas

Cableado del panel de cuatro flotadores ②

SW1	Fondo	Bombas apagadas
SW2	Segundo	Primera bomba encendida
SW3	Tercero	Segunda bomba encendida
SW4	Extremo superior	Alarma encendida

Paneles dobles utilizando interruptores de ángulo amplio:

Cableado del panel de tres flotadores

SW1	Fondo	Primera bomba encendida/ ambas apagadas
SW2	Extremo superior	Segunda bomba y alarma encendidas

Cableado del panel de cuatro flotadores

SW1	Fondo	Primera bomba encendida/ ambas apagadas
SW2	Medio	Segunda bomba encendida
SW3	Extremo superior	Alarma encendida

Paneles simples utilizando interruptores de acción simple:

Panel simple con alarma ①

SW1	Fondo	Bomba apagada
SW2	Medio	Bomba encendida
SW3	Extremo superior	Alarma encendida/apagada

Panel simple sin alarma

SW1	Fondo	Bomba apagada
SW2	Extremo superior	Bomba encendida

Paneles simples utilizando interruptores de ángulo amplio:

Panel simple con alarma

SW1	Fondo	Bomba encendida/apagada
SW2	Extremo superior	Alarma encendida/apagada

Panel simple sin alarma

SW1	Bomba encendida/apagada

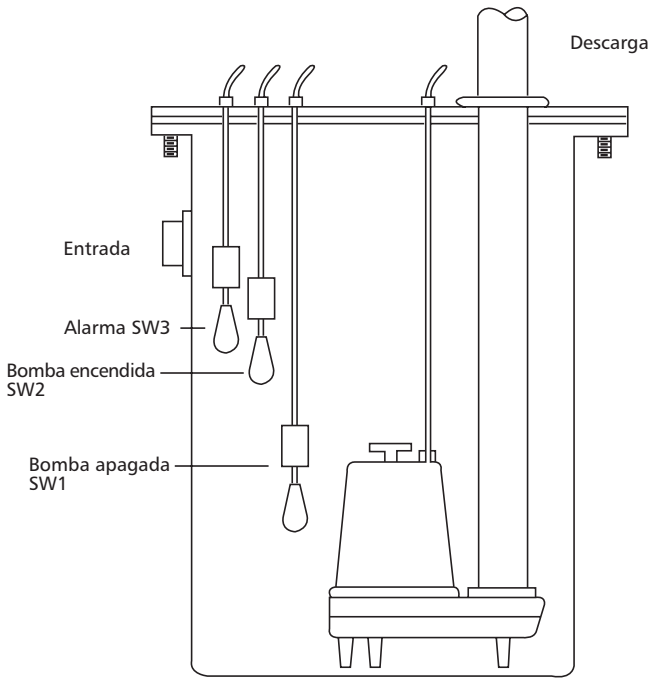

Simple ①

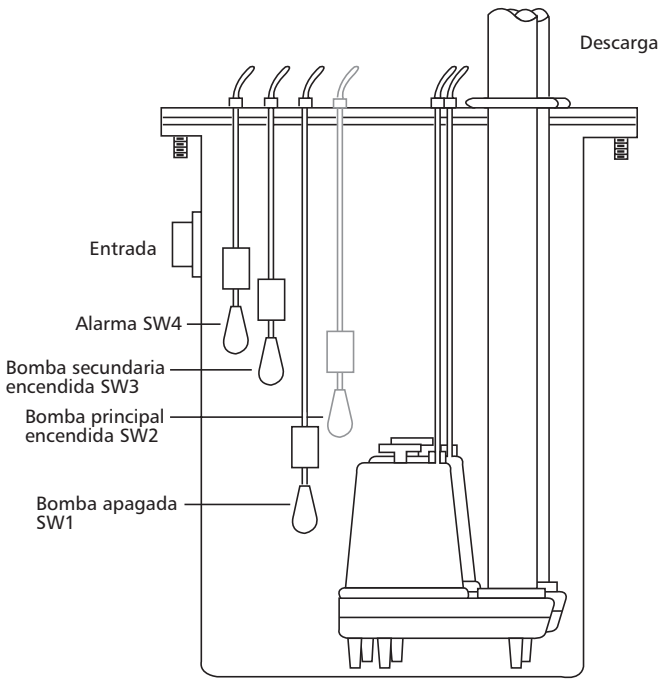

Doble ②

DESBALANCE DE POTENCIA TRIFÁSICA

Se recomienda un suministro trifásico completo incluyendo tres transformadores individuales o un transformador trifásico. Se pueden usar conexiones en estrella o en triángulo "abierto" empleando sólo dos transformadores, pero hay más posibilidad de que produzcan un rendimiento inadecuado, disparo por sobrecarga o falla prematura del motor debido al desbalance de corriente.

Mida la corriente en cada uno de los tres conductores del motor y calcule el desbalance de corriente en la forma que se explica abajo.

Si el desbalance de corriente es del 2% o menos, deje los conductores tal como están conectados. Si el desbalance de corriente es de más del 2%, hay que verificar las lecturas de corriente en cada derivación empleando cada una de las tres conexiones posibles. Enrolle los conductores del motor en el arrancador en la misma dirección para evitar una inversión del motor.

Para calcular el porcentaje de desbalance de corriente:

A. Sume los tres valores de corriente de línea.

B. Divida la suma por tres, con lo cual se obtiene la corriente promedio.

C. Seleccione el valor de corriente más alejado de la corriente promedio (ya sea alto o bajo).

D. Determine la diferencia entre este valor de corriente (más alejado del promedio) y el promedio.

E. Divida la diferencia por el promedio. Multiplique el resultado por 100 para determinar el porcentaje de desbalance.

El desbalance de corriente no debe exceder el 5% con la carga del factor de servicio o el 10% con la carga de entrada nominal. Si el desbalance no puede corregirse enrollando los conductores, la causa del desbalance debe determinarse y corregirse. Si, en las tres conexiones posibles, la derivación más alejada del promedio está en el mismo conductor de potencia, entonces la mayoría del desbalance proviene de la fuente de potencia.

Contacte a la compañía de electricidad local para solucionar el desbalance.

	Conexión 1			Conexión 2			Conexión 3		
Terminales del arrancador	L1	L2	L3	L1	L2	L3	L1	L2	L3
	⊥ T	⊥ T	⊥ T	⊥ T	⊥ T	⊥ T	⊥ T	⊥ T	⊥ T
Conductores del motor	R T3	B T1	W T2	W T2	R T3	B T1	B T1	W T2	R T3

Ejemplo:

T3-R = 51 amps	T2-W = 50 amps	T1-B = 50 amps
T1-B = 46 amps	T3-R = 48 amps	T2-W = 49 amps
T2-W = 53 amps	T1-B = 52 amps	T3-R = 51 amps
Total = 150 amps	Total = 150 amps	Total = 150 amps
÷ 3 = 50 amps	÷ 3 = 50 amps	÷ 3 = 50 amps
− 46 = 4 amps	− 48 = 2 amps	− 49 = 1 amps
4 ÷ 50 = .08 or 8%	2 ÷ 50 = .04 or 4%	1 ÷ 50 = .02 or 2%

LECTURAS DE RESISTENCIA DEL AISLAMIENTO

Valores normales en ohmios y megaohmios entre todos los conductores y tierra

Condición del motor y los conductores	Valor en ohmios	Valor en Megaohmios
Un motor nuevo (sin cable de bajada).	20,000,000 (o más)	20 (o más)
Un motor usado que puede reinstalarse en el pozo.	10,000,000 (o más)	10 (o más)
Motor en el pozo. Las lecturas son para el cable de bajada más el motor.		
Motor nuevo.	2,000,000 (o más)	2 (o más)
El motor está en buenas condiciones.	500,000 - 2,000,000	.5 - 2
Daño de aislamiento, localícelo y repárelo.	Menos de 500,000	Menos de 0.5

La resistencia del aislamiento varía muy poco con la clasificación. Los motores de todas las clasificaciones de potencia, tensión y fase tienen valores similares de resistencia de aislamiento.

Los valores de resistencia de aislamiento anteriores están basados en lecturas obtenidas con un megaohmiómetro con salida de 500 V CC. Las lecturas pueden variar utilizando un ohmiómetro de tensión más baja; consulte con la fábrica si tiene dudas acerca de las lecturas.

Los datos de ingeniería para modelos específicos pueden encontrarse en su catálogo y en nuestro sitio Web (dirección en la cubierta).

Los diagramas de cableado del panel de control se envían con los paneles de control. Utilice los dibujos del panel de control junto con este manual de instrucciones para completar el cableado.

OPERACIÓN DE LA BOMBA

Sumersión mínima	
Servicio continuo	Sumergida totalmente
Servicio intermitente	6 pulg. por debajo del extremo superior del motor

Temperatura máxima del fluido	
Operación continua	104º F 40º C
Operación intermitente	140º F 60º C

Pumpmaster y Pumpmaster Plus - Cableado directo

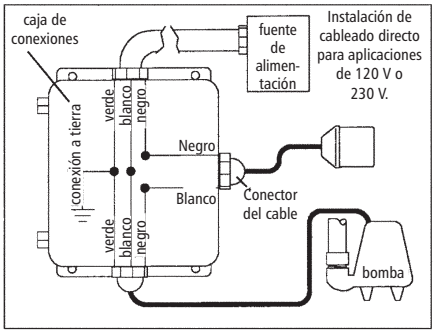

Figura 1

Flotador doble – de cableado directo

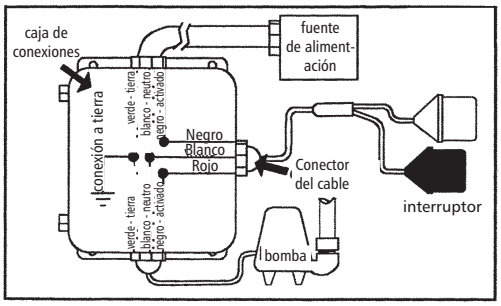

Figura 2

Determinación del rango de bombeo

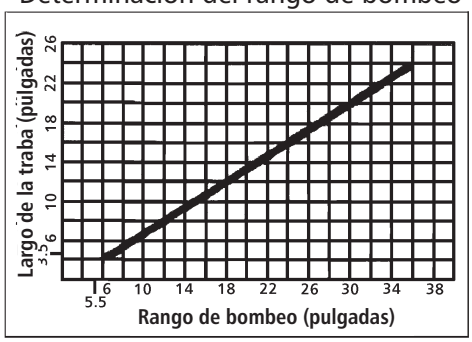

Figura 3

Interruptor de flotador de acción simple Instalación "típica"

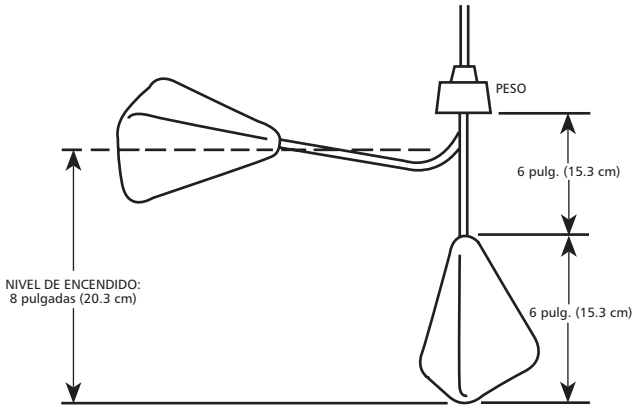

Figura 4

Interruptor de flotador de ángulo amplio

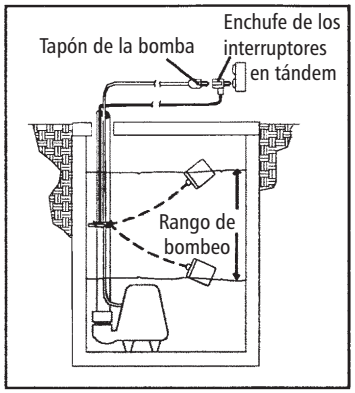

Figura 5

Diagrama de conexión trifásica

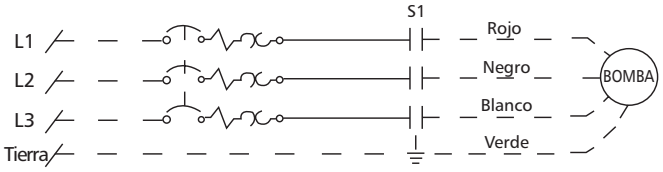

Figura 6

⚠ADVERTENCIA
Tensión peligrosa

LA FALLA DE DESCONECTAR Y BLOQUEAR LA CORRIENTE ELÉCTRICA ANTES DE INTENTAR CUALQUIER SERVICIO, PUEDE CAUSAR ELECTROCHOQUE, QUEMADURAS O LA MUERTE.

SÍNTOMA	CAUSA PROBABLE	ACCIÓN RECOMENDADA
EL MOTOR NO ESTÁ FUNCIONANDO **NOTA:** Si el cortacircuitos se "ABRE" repetidamente, **NO** lo reposicione. Llame a un electricista calificado.	Se disparó el protector térmico del motor	Deje que se enfríe el motor. Asegure la sumersión mínima de la bomba. Limpie los residuos de la carcasa y el impulsor.
	Cortacircuitos abierto o fusible quemado.	Determine la causa, llame a un electricista calificado.
	Impulsor de la bomba rozando o atascado.	Determine el consumo de corriente del motor. Si es dos veces más alto que el indicado en la placa de identificación de la bomba, el impulsor está trabado, los cojinetes del motor o el eje está dañado. Limpie los residuos de la carcasa y el impulsor, consulte con el agente.
a) Operación manual	El cable de alimentación está dañado.	
	Conexiones eléctricas inadecuadas en el panel de control.	
b) Operación automática	No hay alambre neutro conectado al panel de control.	La resistencia entre los conductores de alimentación y tierra debe indicar infinito. Si alguna lectura es incorrecta, llame a un electricista calificado.
	Conexiones eléctricas inadecuadas en el panel de control.	Inspeccione las conexiones del panel de control. Llame a un electricista calificado.
NOTA: Inspeccione la bomba en modo manual primero para confirmar el funcionamiento. Si la bomba funciona, el control automático o el cableado está defectuoso. Si la bomba no funciona, vea arriba.	Interruptor de nivel de líquido defectuoso para activar los controles.	Con el interruptor desconectado, verifique la continuidad mientras activa el interruptor de nivel de líquido. Reemplace el interruptor, según se requiera.
	Nivel de líquido insuficiente para activar los controles.	Deje que el nivel de líquido aumente de 3 a 4 pulgadas (76 mm –101 mm) sobre el nivel de activación.
	Cordones de los sensores de nivel de líquido enredados.	Desenrede los cordones y asegure el funcionamiento libre.
LA BOMBA NO SE APAGA	Cordones de los sensores de nivel de líquido enredados.	Desenrede los cordones y asegure el funcionamiento libre.
	La bomba está atascada con aire.	Apague la bomba durante aproximadamente un minuto y arránquela nuevamente. Repita hasta que se despeje la obstrucción de aire. Si la obstrucción de aire persiste en un sistema con tubo con válvula de retención, puede perforarse un agujero de 3/16 pulg. (4.8 mm) en el tubo de descarga aproximadamente a 2 pulgadas (51 mm) de la conexión de descarga.
	El flujo de líquido entrante coincide con la capacidad de descarga de la bomba.	Podría requerirse una bomba más grande.
LA BOMBA ENTREGA POCO O NADA DE LÍQUIDO	La válvula de retención está instalada invertida, está obstruida o atascada en posición cerrada.	Verifique la flecha de flujo en la válvula y verifique el funcionamiento de ésta.
	Carga excesiva del sistema.	Consulte con el agente.
	Entrada a la bomba obstruida.	Inspeccione y despeje, según sea requerido.
	Tensión incorrecta, o conectada incorrectamente.	Verifique la rotación, la tensión y las conexiones de la bomba. Consulte con un electricista calificado.
	La bomba está atascada con aire.	Consulte la acción recomendada, arriba.
	El impulsor está gastado o dañado.	Inspeccione el impulsor, reemplácelo según sea necesario.
	Los controles de nivel de líquido están defectuosos o instalados incorrectamente.	Inspeccione, reajuste o reemplace, según sea requerido.
LA BOMBA CICLA CONSTANTEMENTE	La válvula de retención de la descarga no funciona.	Inspeccione, repare o reemplace, según sea requerido.
	El área de contención de aguas negras es demasiado pequeña.	Consulte con el agente.
	Los controles de nivel de líquido están defectuosos o instalados incorrectamente.	Inspeccione, reajuste o reemplace, según sea requerido.
	Cantidad excesiva de líquido entrante para una bomba de este tamaño.	Consulte con el agente.

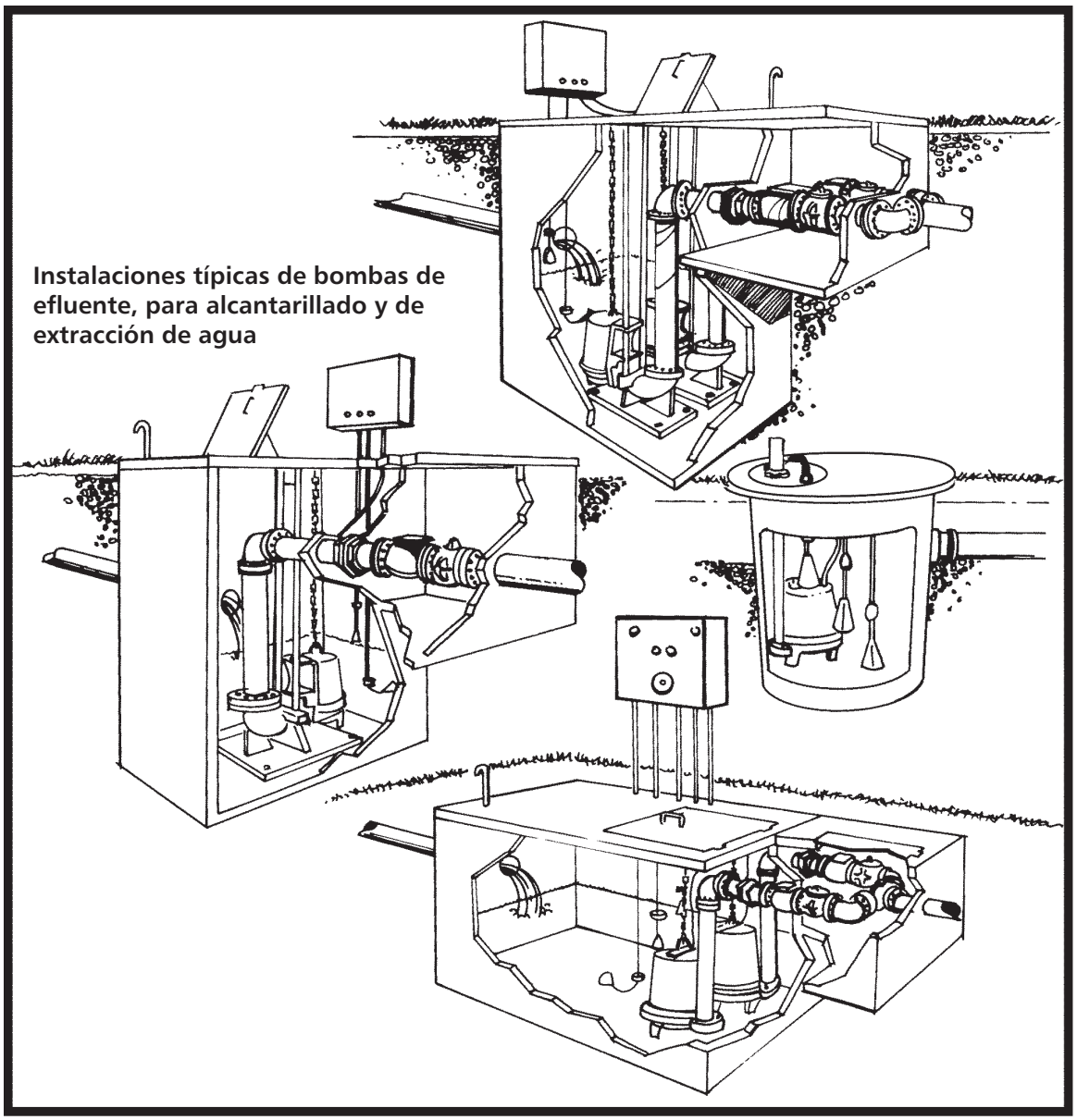

Instalaciones típicas de bombas de efluente, para alcantarillado y de extracción de agua

GARANTÍA LIMITADA DE GOULDS PUMPS

Esta garantía es aplicable a todas las bombas para sistemas de agua fabricadas por Goulds Pumps.

Toda parte o partes que resulten defectuosas dentro del período de garantía serán reemplazadas sin cargo para el comerciante durante dicho período de garantía. Tal período de garantía se extiende por doce (12) meses a partir de la fecha de instalación, o dieciocho (18) meses a partir de la fecha de fabricación, cualquiera se cumpla primero.

Todo comerciante que considere que existe lugar a un reclamo de garantía deberá ponerse en contacto con el distribuidor autorizado de Goulds Pumps del cual adquiriera la bomba, y ofrecer información detallada con respecto al reclamo. El distribuidor está autorizado a liquidar todos los reclamos por garantía a través del Departamento de Servicios a Clientes de Goulds Pumps.

La presente garantía excluye:

(a) La mano de obra, el transporte y los costos relacionados en los que incurra el comerciante;

(b) los costos de reinstalación del equipo reparado;

(c) los costos de reinstalación del equipo reemplazado;

(d) daños emergentes de cualquier naturaleza; y

(e) el reembolso de cualquier pérdida causada por la interrupción del servicio.

A los fines de esta garantía, los términos "Distribuidor", "Comerciante" y "Cliente" se definen como sigue:

(1) "Distribuidor" es aquel individuo, sociedad, corporación, asociación u otra entidad jurídica que opera entre Goulds Pumps y el comerciante para la compra, consignación o contratos de venta de las bombas en cuestión.

(2) "Comerciante" es todo individuo, sociedad, corporación, asociación u otra entidad jurídica que realiza negocios de venta o alquiler-venta (leasing) de bombas a clientes.

(3) "Cliente" es toda entidad que compra o que adquiere bajo la modalidad de leasing las bombas en cuestión de un comerciante. El término "cliente" puede significar un individuo, una sociedad, una corporación, una sociedad de responsabilidad limitada, una asociación o cualquier otra entidad jurídica con actividades en cualquier tipo de negocios.

LA PRESENTE GARANTÍA SE EXTIENDE AL COMERCIANTE ÚNICAMENTE

GOULDS PUMPS

Goulds Pumps y el símbolo ITT Engineered Blocks son marcas registradas y marcas comerciales de ITT Industries.

LAS ESPECIFICACIONES ESTÁN SUJETAS A CAMBIO SIN PREVIO AVISO.

IM107R03 Marzo, 2006

© 2006 ITT Water Technology, Inc.

Engineered for life

OPERATOR'S MANUAL

INCLUDING: OPERATION, INSTALLATION & MAINTENANCE

PD10P-X
PE10P-X

RELEASED: 11-10-03
REVISED: 1-9-04
(REV. 01)

1" DIAPHRAGM PUMP
1:1 RATIO (NON-METALLIC)

READ THIS MANUAL CAREFULLY BEFORE INSTALLING, OPERATING OR SERVICING THIS EQUIPMENT.

It is the responsibility of the employer to place this information in the hands of the operator. Keep for future reference.

SERVICE KITS

Refer to Model Chart to match the pump material options.
637397 for Air Section repair (see page 6).
637396-XX for Fluid Section repair (see page 4). NOTE: This kit also contains several air motor seals which will need to be replaced.
637395-X Major Air Valve Assembly (see page 7).

PUMP DATA

Models . . . . . See Model Description Chart for "-XXX".
Pump Type . . . . . Non-Metallic Air Operated Double Diaphragm
Material . . . . . See Model Description Chart.
Weight . . . PX10P-FKS-XXX . . . . . 27.15 lbs (12.32 kgs)
PX10P-FPS-XXX . . . . . 19.87 lbs (9.01 kgs)
PX10P-YKS-XXX . . . . . 26.72 lbs (12.12 kgs)
PX10P-YPS-XXX . . . . . 19.59 lbs (8.89 kgs)
PX10P-AKS-XXX, -BKS . . 25.83 lbs (11.72 kgs)
PX10P-APS-XXX, -BPS . . 19.35 lbs (8.78 kgs)
Maximum Air Inlet Pressure . . . . . 120 p.s.i.g. (8.3 bar)
Maximum Material Inlet Pressure . . . . . 10 p.s.i.g. (0.69 bar)
Maximum Outlet Pressure . . . . . 120 p.s.i.g. (8.3 bar)
Maximum Flow Rate (flooded inlet) . . . . 53.0 g.p.m. (200.6 l.p.m.)
Displacement / Cycle @ 100 p.s.i.g. . . . 0.116 gal. (0.44 lit.)
Maximum Particle Size . . . . . 1/8" dia. (3.2 mm)
Maximum Temperature Limits (Diaphragm / Ball / Seat material)
Hytrel® . . . . . -20° - 150° F (-29° - 66° C)
Nitrile . . . . . 10° - 180° F (-12° - 82° C)
Polypropylene . . . . . 35° - 150° F (2° - 66° C)
P.V.D.F. (Kynar®) . . . . . 10° - 200° F (-12° - 93° C)
Santoprene® . . . . . -40° - 225° F (-40° - 107° C)
T.F.E. (Teflon®) . . . . . 40° - 225° F (4° - 107° C)
Viton® . . . . . -40° - 350° F (-40° - 177° C)
Dimensional Data . . . . . see page 8
Mounting Dimension . . . 5.032" x 10.050" (127.8 mm x 255.3 mm)
Noise Level @ 70 p.s.i., 60 c.p.m. . . . . 79.7 db(A)①

① The pump sound pressure levels published here have been updated to an Equivalent Continuous Sound Level (L_{Aeq}) to meet the intent of ANSI S1.13-1971, CAGI-PNEUROP S5.1 using four microphone locations.

NOTICE: All possible options are shown in the chart, however, certain combinations may not be recommended, consult a representative or the factory if you have questions concerning availability.

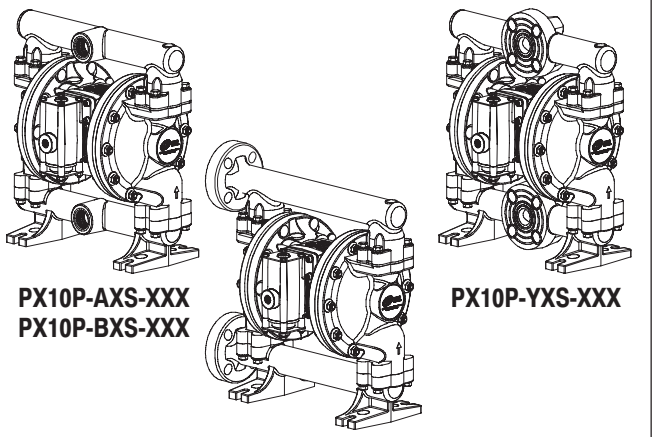

PX10P-AXS-XXX
PX10P-BXS-XXX

PX10P-FXS-XXX

PX10P-YXS-XXX

Figure 1

MODEL DESCRIPTION CHART

P X 10 P - X X S - X X X

ELECTRONIC INTERFACE
D - None E - Available

CENTER SECTION MATERIAL
P - Polypropylene

FLUID CONNECTION / LOCATION
A - 1" N.P.T.F. - 1
B - Rp 1 - 11 BS
F - 1" A.N.S.I. / DIN Flange / End
Y - 1" A.N.S.I. / DIN Flange / Center

FLUID CAPS & MANIFOLD MATERIAL
K - P.V.D.F. (Kynar)
P - Polypropylene

HARDWARE MATERIAL
S - Stainless Steel

SEAT MATERIAL
H - Hard 440 Stainless Steel
K - P.V.D.F. (Kynar)
P - Polypropylene
S - 316 Stainless Steel

BALL MATERIAL
A - Santoprene G - Nitrile V - Viton
C - Hytrel T - Teflon

DIAPHRAGM MATERIAL
A - Santoprene M - Medical Grade Santoprene
C - Hytrel T - Teflon / Santoprene
G - Nitrile V - Viton

FLUID SECTION SERVICE KIT SELECTION PX10P - XXS - X X X

EXAMPLE: MODEL # PD10P-FPS-PAA 637396 - X X
FLUID SECTION SERVICE KIT # 637396-AA BALL DIAPHRAGM

INGERSOLL-RAND COMPANY
P.O. BOX 151 • ONE ARO CENTER • BRYAN, OHIO 43506-0151
(419) 636-4242 • FAX (419) 633-1674
©2004
CCN 15206378

ARO®

OPERATING AND SAFETY PRECAUTIONS

READ, UNDERSTAND, AND FOLLOW THIS INFORMATION TO AVOID INJURY AND PROPERTY DAMAGE.



EXCESSIVE AIR PRESSURE
STATIC SPARK



HAZARDOUS MATERIALS
HAZARDOUS PRESSURE

⚠ WARNING EXCESSIVE AIR PRESSURE. Can cause personal injury, pump damage or property damage.

- Do not exceed the maximum inlet air pressure as stated on the pump model plate.
- Be sure material hoses and other components are able to withstand fluid pressures developed by this pump. Check all hoses for damage or wear. Be certain dispensing device is clean and in proper working condition.

⚠ WARNING STATIC SPARK. Can cause explosion resulting in severe injury or death. Ground pump and pumping system.

- Sparks can ignite flammable material and vapors.
- The pumping system and object being sprayed must be grounded when it is pumping, flushing, recirculating or spraying flammable materials such as paints, solvents, lacquers, etc. or used in a location where surrounding atmosphere is conducive to spontaneous combustion. Ground the dispensing valve or device, containers, hoses and any object to which material is being pumped.
- Secure pump, connections and all contact points to avoid vibration and generation of contact or static spark.
- Consult local building codes and electrical codes for specific grounding requirements.
- After grounding, periodically verify continuity of electrical path to ground. Test with an ohmmeter from each component (e.g., hoses, pump, clamps, container, spray gun, etc.) to ground to insure continuity. Ohmmeter should show 0.1 ohms or less.
- Submerse the outlet hose end, dispensing valve or device in the material being dispensed if possible. (Avoid free streaming of material being dispensed.)
- Use hoses incorporating a static wire.
- Use proper ventilation.
- Keep inflammables away from heat, open flames and sparks.
- Keep containers closed when not in use.

⚠ WARNING Pump exhaust may contain contaminants. Can cause severe injury. Pipe exhaust away from work area and personnel.

- In the event of a diaphragm rupture, material can be forced out of the air exhaust muffler.
- Pipe the exhaust to a safe remote location when pumping hazardous or inflammable materials.
- Use a grounded 3/8" min. i.d. hose between the pump and the muffler.

⚠ WARNING HAZARDOUS PRESSURE. Can result in serious injury or property damage. Do not service or clean pump, hoses or dispensing valve while the system is pressurized.

- Disconnect air supply line and relieve pressure from the system by opening dispensing valve or device and / or carefully and slowly loosening and removing outlet hose or piping from pump.

⚠ WARNING HAZARDOUS MATERIALS. Can cause serious injury or property damage. Do not attempt to return a pump to the factory or service center that contains hazardous material. Safe handling practices must comply with local and national laws and safety code requirements.

- Obtain Material Safety Data Sheets on all materials from the supplier for proper handling instructions.

⚠ WARNING EXPLOSION HAZARD. Models containing aluminum wetted parts cannot be used with Ill.-Trichloroethane, Methylene Chloride or other Halogenated Hydrocarbon solvents which may react and explode.

- Check pump motor section, fluid caps, manifolds and all wetted parts to assure compatibility before using with solvents of this type.

⚠ WARNING MISAPPLICATION HAZARD. Do not use models containing aluminum wetted parts with food products for human consumption. Plated parts can contain trace amounts of lead.

⚠ CAUTION Verify the chemical compatibility of the pump wetted parts and the substance being pumped, flushed or recirculated. Chemical compatibility may change with temperature and concentration of the chemical(s) within the substances being pumped, flushed or circulated. For specific fluid compatibility, consult the chemical manufacturer.

⚠ CAUTION Maximum temperatures are based on mechanical stress only. Certain chemicals will significantly reduce maximum safe operating temperature. Consult the chemical manufacturer for chemical compatibility and temperature limits. Refer to PUMP DATA on page 1 of this manual.

⚠ CAUTION Be certain all operators of this equipment have been trained for safe working practices, understand it's limitations, and wear safety goggles / equipment when required.

⚠ CAUTION Do not use the pump for the structural support of the piping system. Be certain the system components are properly supported to prevent stress on the pump parts.

- Suction and discharge connections should be flexible connections (such as hose), not rigid piped, and should be compatible with the substance being pumped.

⚠ CAUTION Prevent unnecessary damage to the pump. Do not allow pump to operate when out of material for long periods of time.

- Disconnect air line from pump when system sits idle for long periods of time.

⚠ CAUTION Use only genuine ARO replacement parts to assure compatible pressure rating and longest service life.

NOTICE RE-TORQUE ALL FASTENERS BEFORE OPERATION. Creep of housing and gasket materials may cause fasteners to loosen. Re-torque all fasteners to insure against fluid or air leakage

⚠WARNING	=	Hazards or unsafe practices which could result in severe personal injury, death or substantial property damage.
⚠ CAUTION	=	Hazards or unsafe practices which could result in minor personal injury, product or property damage.
NOTICE	=	Important installation, operation or maintenance information.

GENERAL DESCRIPTION

The ARO Diaphragm Pump offers high volume delivery even at low air pressure and a broad range of material compatibility options available. Refer to the model and option chart. ARO pumps feature stall resistant design, modular air motor / fluid sections.
Air operated double diaphragm pumps utilize a pressure differential in the air chambers to alternately create suction and positive fluid pressure in the fluid chambers, ball checks insure a positive flow of fluid.
Pump cycling will begin as air pressure is applied and it will continue to pump and keep up with the demand. It will build and maintain line pressure and will stop cycling once maximum line pressure is reached (dispensing device closed) and will resume pumping as needed.

AIR AND LUBE REQUIREMENTS

⚠ **WARNING** **EXCESSIVE AIR PRESSURE. Can cause pump damage, personal injury or property damage.**

- A filter capable of filtering out particles larger than 50 microns should be used on the air supply. There is no lubrication required other than the "O" ring lubricant which is applied during assembly or repair.
- If lubricated air is present, make sure that it is compatible with the Nitrile seals in the air motor section of the pump.

INSTALLATION

- Verify correct model / configuration prior to installation.
- Retorque all external fasteners per specifications prior to start up.
- Pumps are tested in water at assembly. Flush pump with compatible fluid prior to installation.
- When the diaphragm pump is used in a forced-feed (flooded inlet) situation, it is recommended that a "Check Valve" be installed at the air inlet.
- Material supply tubing should be at least the same diameter as the pump inlet manifold connection.
- Material supply hose must be reinforced, non-collapsible type compatible with the material being pumped.
- Piping must be adequately supported. Do not use the pump to support the piping.
- Use flexible connections (such as hose) at the suction and discharge. These connections should not be rigid piped and must be compatible with the material being pumped.
- Secure the diaphragm pump legs to a suitable surface (level and flat) to insure against damage by vibration.
- Pumps that need to be submersed must have both wet and non-wet components compatible with the material being pumped.
- Submersed pumps must have exhaust pipe above liquid level. Exhaust hose must be conductive and grounded.
- Flooded suction inlet pressure must not exceed 10 p.s.i.g. (0.69 bar).

OPERATING INSTRUCTIONS

- Always flush the pump with a solvent compatible with the material being pumped if the material being pumped is subject to "setting up" when not in use for a period of time.
- Disconnect the air supply from the pump if it is to be inactive for a few hours.

PARTS AND SERVICE KITS

Refer to the part views and descriptions as provided on page 4 through 7 for parts identification and Service Kit information.

- Certain ARO "Smart Parts" are indicated which should be available for fast repair and reduction of down time.
- Service kits are divided to service two separate diaphragm pump functions: 1. AIR SECTION, 2. FLUID SECTION. The FLUID SECTION is divided further to match typical part MATERIAL OPTIONS.

MAINTENANCE

- Provide a clean work surface to protect sensitive internal moving parts from contamination from dirt and foreign matter during service disassembly and reassembly.
- Keep good records of service activity and include pump in preventive maintenance program.
- Before disassembling, empty captured material in the outlet manifold by turning the pump upside down to drain material from the pump.

FLUID SECTION DISASSEMBLY

1. Remove (60) inlet manifold, (61) outlet manifold.
2. Remove (22) balls, (19 and 33) "O" rings and (21) seats.
3. Remove (15) fluid caps.

NOTE: Only Teflon diaphragm models use a primary diaphragm (7) and a backup diaphragm (8). Refer to the auxiliary view in the Fluid Section illustration.

4. Remove the (6) diaphragm washer, (7) or (7 / 8) diaphragms, and (5) backup washer.

NOTE: Do not scratch or mar the surface of (1) diaphragm rod.

FLUID SECTION REASSEMBLY

- Reassemble in reverse order. Refer to the torque requirements on page 5.
- Clean and inspect all parts. Replace worn or damaged parts with new parts as required.
- Lubricate (1) diaphragm rod and (144) "U" cup with Lubriplate® FML-2 grease (94276 grease packet is included in service kit).
- For models with Teflon diaphragms: Item (8) Santoprene diaphragm is installed with the side marked "AIR SIDE" towards the pump center body. Install the Teflon diaphragm (7) with the side marked "FLUID SIDE" towards the (15) fluid cap.
- Re-check torque settings after pump has been re-started and run a while.

Viton®, Teflon® and Hytrel® are trademarks of the DuPont Company, • Kynar® is a registered trademark of Penwalt Corp.
Santoprene® is a registered trademark of Monsanto Company, licensed to Advanced Elastomer Systems, L.P., • Lubriplate® is a registered trademark of Lubriplate Division (Fiske Brothers)

FLUID SECTION SERVICE KITS (637396-XX)

★ **KITS INCLUDE: BALLS (see Ball Option, refer to -XX in Service Kit chart below), DIAPHRAGMS (see Diaphragm Option, refer to -XX in Service Kit chart below), and items 19, 70, 144, 175 and 180 (listed below) plus 174 and 94276 Lubriplate FML-2 grease (page 6).**

SEAT OPTIONS PX10P-XXS-XXX

"21"			
-XXX	Seat	Qty	[Mtl]
-HXX	94706	(4)	[SH]
-KXX	94707-2	(4)	[K]
-PXX	94707-1	(4)	[P]
-SXX	95093	(4)	[SS]

BALL OPTIONS PX10P-XXS-XXX

★ "22" (1-1/4" dia.)			
-XXX	Ball	Qty	[Mtl]
-XAX	93278-A	(4)	[SP]
-XCX	93278-C	(4)	[H]
-XGX	93278-2	(4)	[B]
-XTX	93278-4	(4)	[T]
-XVX	93278-3	(4)	[V]

MATERIAL CODE

[B]	= Nitrile
[C]	= Carbon Steel
[E]	= E.P.R.
[H]	= Hytrel
[K]	= P.V.D.F. (Kynar)
[MSP]	= Medical Grade Santoprene
[P]	= Polypropylene
[SH]	= Hard Stainless Steel
[SP]	= Santoprene
[SS]	= Stainless Steel
[T]	= Teflon
[V]	= Viton

DIAPHRAGM OPTIONS PX10P-XXS-XXX

	★ Service Kit	★ "7" / "8"			★ "19"			★ "33"		
-XXX	-XX = (Ball) -XX = (Diaphragm)	Diaphragm	Qty	[Mtl]	"O" Ring (1/8" x 2-1/8" o.d.)	Qty	[Mtl]	"O" Ring (1/8" x 1-5/8" o.d.)	Qty	[Mtl]
-XXA	637396-XA	95989-A	(2)	[SP]	93280	(4)	[E]	93279	(4)	[E]
-XXC	637396-XC	95989-C	(2)	[H]	Y327-225	(4)	[V]	Y327-220	(4)	[V]
-XXG	637396-XG	95989-G	(2)	[B]	Y325-225	(4)	[B]	Y325-220	(4)	[B]
-XXM	637396-XM	95989-M	(2)	[MSP]	93280	(4)	[E]	93279	(4)	[E]
-XXT	637396-XT	96146-T / 96145-A	(2)	[T/SP]	93282	(4)	[T]	93281	(4)	[T]
-XXV	637396-XV	95989-3	(2)	[V]	Y327-225	(4)	[V]	Y327-220	(4)	[V]

MANIFOLD / FLUID CAP MATERIAL OPTIONS PX10P-XXS-XXX

			P.V.D.F. (KYNAR)						POLYPROPYLENE					
			PX10P-AKS- PX10P-BKS-		PX10P-FKS-		PX10P-YKS-		PX10P-APS- PX10P-BPS-		PX10P-FPS-		PX10P-YPS-	
Item	Description (size)	Qty	Part No.	[Mtl]	Part No.	[Mtl]	Part No.	[Mtl]	Part No.	[Mtl]	Part No.	[Mtl]	Part No.	[Mtl]
6	Diaphragm Washer	(2)	96108-2	[K]	96108-2	[K]	96108-2	[K]	96108-1	[P]	96108-1	[P]	96108-1	[P]
15	Fluid Cap	(2)	96105-2	[K]	96105-2	[K]	96105-2	[K]	96105-1	[P]	96105-1	[P]	96105-1	[P]
60	Inlet Manifold	(1)	96200-[◇]	[K]	96195-2	[K]	96180-2	[K]	96200-[⊞]	[P]	96195-1	[P]	96180-1	[P]
61	Outlet Manifold	(1)	96199-[◇]	[K]	96194-2	[K]	96179-2	[K]	96199-[⊞]	[P]	96194-1	[P]	96179-1	[P]

◇ For N.P.T.F. thread models (PX10P-AKS-), use "-2". For BSP thread models (PX10P-BKS-), use "-4".
⊞ For N.P.T.F. thread models (PX10P-APS-), use "-1". For BSP thread models (PX10P-BPS-), use "-3".

COMMON PARTS

Item	Description (size)	Qty	Part No.	[Mtl]
1	Rod	(1)	95995	[C]
5	Backup Washer	(2)	95990-1	[SS]
26	Screw (M8 x 1.25 - 6g x 30 mm)	(16)	95880	[SS]
27	Screw (M8 x 1.25 - 6g x 50 mm)	(20)	96163	[SS]
28	Washer (8.5 mm i.d.)	(8)	96217	[SS]
29	Flange Nut (M8 x 1.25 - 6h)	(20)	96229	[SS]
68	Air Cap (models PD10P-X)	(1)	96104-2	[P]
	(models PE10P-X)	(1)	96104-4	[P]
69	Air Cap (models PD10P-X)	(1)	96104-1	[P]
	(models PE10P-X)	(1)	96104-3	[P]

Item	Description (size)	Qty	Part No.	[Mtl]
★ ✓ 70	Gasket	(2)	95843	[B]
◉ 74	Pipe Plug (1/4 - 18 N.P.T. x 7/16")	(2)	93832-3	[K]
◉ 76	Pipe Plug (1/8 - 27 N.P.T. x .27")	(1)	Y17-50-S	[SS]
131	Screw (M8 x 1.25 - 6g x 100 mm)	(4)	96216	[SS]
★✓144	"U" Cup (3/16" x 1-1/8" o.d.)	(2)	Y186-49	[B]
★✓175	"O" Ring (3/32" x 13/16" o.d.)	(2)	Y325-114	[B]
★✓180	"O" Ring (2.5 mm x 12 mm o.d.)	(4)	96292	[B]
195	Nut (M8 x 1.25 - 6h)	(4)	96005	[SS]

✓ Air Section Service Kit parts, see page 6.
◉ Used on models PE10P-XXS-XXX only.

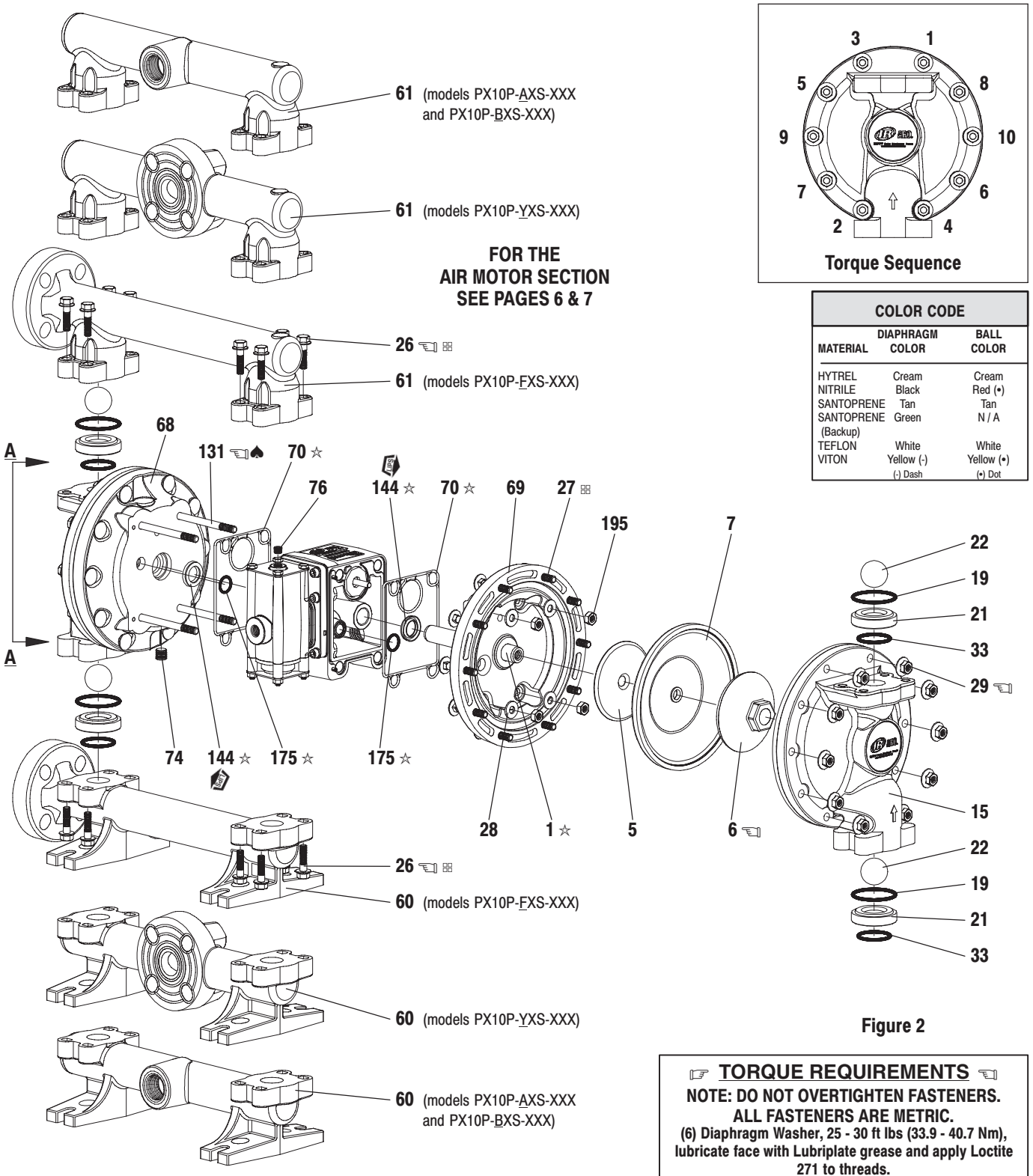

Torque Sequence

COLOR CODE		
MATERIAL	DIAPHRAGM COLOR	BALL COLOR
HYTREL	Cream	Cream
NITRILE	Black	Red (•)
SANTOPRENE	Tan	Tan
SANTOPRENE (Backup)	Green	N / A
TEFLON	White	White
VITON	White Yellow (-) (-) Dash	Yellow (•) (•) Dot

Figure 2

VIEW OF TWO PIECE TEFLON DIAPHRAGM

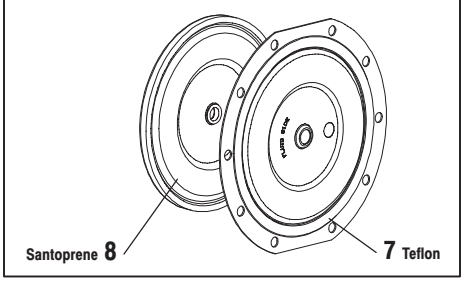

AUXILIARY VIEW A-A

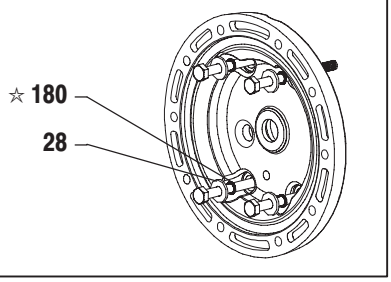

☜ TORQUE REQUIREMENTS ☜

NOTE: DO NOT OVERTIGHTEN FASTENERS.
ALL FASTENERS ARE METRIC.
(6) Diaphragm Washer, 25 - 30 ft lbs (33.9 - 40.7 Nm), lubricate face with Lubriplate grease and apply Loctite 271 to threads.
(26) Screws, 10 - 12 ft lbs (13.6 - 16.3 Nm).
(29) Nuts, 10 - 12 ft lbs (13.6 - 16.3 Nm).
(131) Screws, apply Loctite 242 and tighten to 11 - 14 ft lbs (14.9 - 19.0 Nm).

LUBRICATION / SEALANTS

☆ Apply Lubriplate FML-2 Grease to all "O" rings, "U" Cups & mating parts.
♠ Apply Loctite 242 to threads at assembly.
⊞ Apply anti-seize compound to threads at assembly.

◇ Lubriplate FML-2 is a white food grade petroleum grease.

PARTS LIST / PX10P-X AIR SECTION

✓ **Indicates parts included in 637397 Air Section Service Kit shown below and items (70), (144), (175) and (180) shown on page 4.**

AIR MOTOR PARTS

Item	Description (size)	Qty	Part No.	[Mtl]
101	Center Body	(1)	95970	[P]
103	Bushing	(1)	96000	[D]
105	Screw (M6 x 1 - 6g x 130 mm)	(4)	95886	[SS]
107	End Plate	(2)	95840	[SS]
✓ 111	Spool	(1)	95835	[D]
118	Actuator Pin	(2)	95999	[SS]
121	Sleeve	(2)	95123	[D]
✓ 132	Gasket	(1)	95841	[B]
133	Washer (M6)	(6)	95931	[SS]
134	Screw (M6 x 1 - 6g x 20 mm)	(6)	95887	[SS]
135	Valve Block (PD10P-XXS-XXX)	(1)	96174-1	[P]
	(PE10P-XXS-XXX)	(1)	96174-2	[P]
136	End Cap	(1)	95833	[P]
✓ 137	Gasket	(1)	95844	[B]
✓ 138	"U" Cup (3/16" x 1-5/8" o.d.)	(1)	Y186-53	[B]
✓ 139	"U" Cup (3/16" x 1-1/8" o.d.)	(1)	Y186-49	[B]
140	Valve Insert	(1)	95838	[AO]
141	Valve Plate	(1)	95885	[AO]
✓ 166	Gasket	(1)	96004	[B]
✓ 167	Pilot Piston (includes 168 and 169)	(1)	67164	[D]
168	"O" Ring (3/32" x 5/8" o.d.)	(2)	94433	[U]
169	"U" Cup (1/8" x 7/8" o.d.)	(1)	Y240-9	[B]
170	Piston Sleeve	(1)	94081	[Br]
✓ 171	"O" Ring (3/32" x 1-1/8" o.d.)	(1)	Y325-119	[B]
✓ 172	"O" Ring (1/16" x 1-1/8" o.d.)	(1)	Y325-22	[B]
✓ 173	"O" Ring (3/32" x 1-3/8" o.d.)	(2)	Y325-123	[B]
★ ✓ 174	"O" Ring (1/8" x 1/2" o.d.)	(2)	Y325-202	[B]
✓ 176	Diaphragm (check valve)	(2)	95845	[SP]
181	Roll Pin (5/32" o.d. x 1/2" long)	(4)	Y178-52-S	[SS]
✓ 200	Gasket	(1)	95842	[B]
201	Muffler	(1)	93139	[P]
233	Adapter Plate	(1)	95832	[P]
236	Nut (M6 x 1 - 6h)	(4)	95924	[SS]
★ ✓	Lubriplate FML-2 Grease	(1)	94276	
	Lubriplate Grease Packets (10)		637308	

★ Fluid Section Service Kit parts, see page 4.

MATERIAL CODE

[AO] = Alumina Oxide	[D] = Acetal	[SS] = Stainless Steel
[B] = Nitrile	[P] = Polypropylene	[U] = Polyurethane
[Br] = Brass	[SP] = Santoprene	

AIR MOTOR SECTION SERVICE

Service is divided into two parts – 1. Pilot Valve, 2. Major Valve.

GENERAL REASSEMBLY NOTES:

- Air Motor Section Service is continued from Fluid Section repair.
- Inspect and replace old parts with new parts as necessary. Look for deep scratches on surfaces, and nicks or cuts in "O" rings.
- Take precautions to prevent cutting "O" rings upon installation.
- Lubricate "O" rings with Lubriplate FML-2 grease.
- Do not over-tighten fasteners, refer to torque specification block on view.
- Re-torque fasteners following restart.
- SERVICE TOOLS – To aid in the installation (168) "O" rings onto the (167) pilot piston, use Tool # 204130-T, available from Aro.

PILOT VALVE DISASSEMBLY

1. A light tapping on (118) should expose the opposite (121) sleeve, (167) pilot piston and other parts.
2. Remove (170) sleeve, inspect inner bore of sleeve for damage.

PILOT VALVE REASSEMBLY

1. Clean and lubricate parts not being replaced from service kit.
2. Install new (171 and 172) "O" rings, replace (170) sleeve.
3. Install new (168) "O" rings and (169) seal - Note the lip direction. Lubricate and replace (167).
4. Reassemble remaining parts, replace (173 and 174) "O" rings.

MAJOR VALVE DISASSEMBLY

1. Remove (135) valve block and (233) adapter plate, exposing (132 and 166) gaskets and (176) checks.
2. Remove (233) adapter plate, releasing (140) valve insert, (141) valve plate and (200) gasket.
3. Remove (136) end cap and (137) gasket, releasing (111) spool.

MAJOR VALVE REASSEMBLY

1. Install new (138 and 139) "U" cups on (111) spool – **LIPS MUST FACE EACH OTHER.**
2. Insert (111) spool into (135) valve block.
3. Install (137) gasket on (136) end cap and assemble end cap to (135) valve block, securing with (107) end plates and (105) screws. NOTE: Tighten (105) screws to 35 - 40 in. lbs (4.0 - 4.5 Nm).
4. Install (140) valve insert and (141) valve plate into (135) valve block. NOTE: Assemble (140) valve insert with "dished" side toward (141) valve plate. Assemble (141) valve plate with part number identification toward (140) valve insert.
5. Assemble (200) gasket and (233) adapter plate to (135) valve block.
6. Assemble (132 and 166) gaskets and (176) checks and to (101) body.
7. Assemble (135) valve block and components to (101) body, securing with (134) screws. NOTE: Tighten (134) screws to 35 - 40 in. lbs (4.0 - 4.5 Nm).

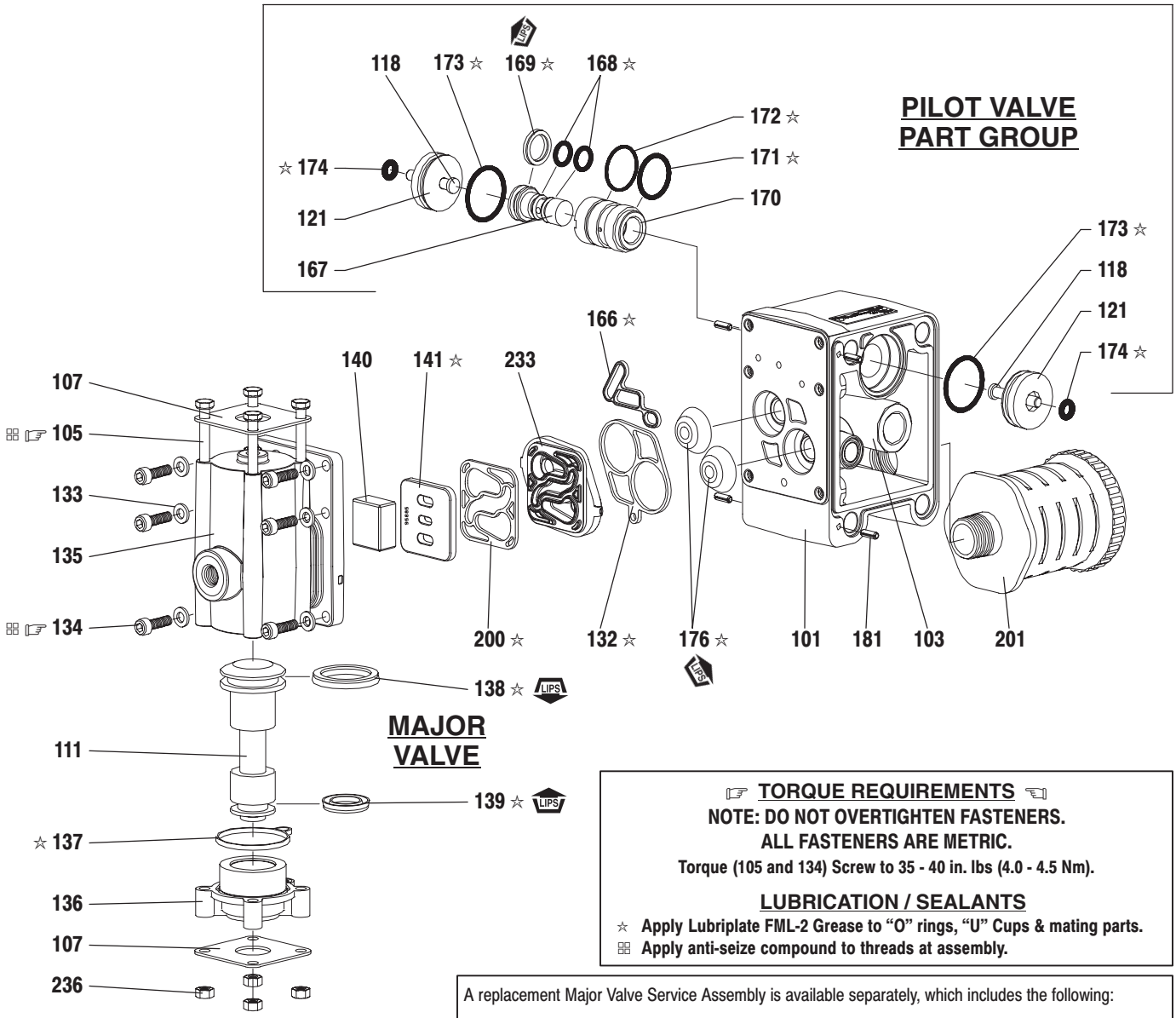

☞ TORQUE REQUIREMENTS ☜

NOTE: DO NOT OVERTIGHTEN FASTENERS.
ALL FASTENERS ARE METRIC.

Torque (105 and 134) Screw to 35 - 40 in. lbs (4.0 - 4.5 Nm).

LUBRICATION / SEALANTS

☆ **Apply Lubriplate FML-2 Grease to "O" rings, "U" Cups & mating parts.**
☐ **Apply anti-seize compound to threads at assembly.**

A replacement Major Valve Service Assembly is available separately, which includes the following:

637395-1 for models PD10P-X: 105 (4), 107 (2), 111, 132, 135, 136, 137, 138, 139, 140, 141, 166, 176 (2), 200, 233 and 236 (4)

637395-2 for models PE10P-X: 76, 105 (4), 107 (2), 111, 132, 135, 136, 137, 138, 139, 140, 141, 166, 176 (2), 200, 233 and 236 (4)

Figure 3

TROUBLE SHOOTING

Product discharged from exhaust outlet.
- Check for diaphragm rupture.
- Check tightness of (6) diaphragm screw.

Air bubbles in product discharge.
- Check connections of suction plumbing.
- Check "O" rings between intake manifold and inlet side fluid caps.
- Check tightness of (6) diaphragm screw.

Motor blows air or stalls.
- Check (176) check valve for damage or wear.
- Check for restrictions in valve / exhaust.

Low output volume, erratic flow, or no flow.
- Check air supply.
- Check for plugged outlet hose.
- Check for kinked (restrictive) outlet material hose.
- Check for kinked (restrictive) or collapsed inlet material hose.
- Check for pump cavitation – suction pipe should be sized at least as large as the inlet thread diameter of the pump for proper flow if high viscosity fluids are being pumped. Suction hose must be a non-collapsing type, capable of pulling a high vacuum.
- Check all joints on the inlet manifolds and suction connections. These must be air tight.
- Inspect the pump for solid objects logged in the diaphragm chamber or the seat area.

DIMENSIONAL DATA

(Dimensions shown are for reference only, they are displayed in inches and millimeters (mm).

DIMENSIONS

A - see below
B - 13-25/32" (349.8 mm)
C - 10-1/16" (255.3 mm)
D - 2-11/32" (59.4 mm)
E - 11-1/32" (279.5 mm)
F - 8-5/16" (211.1 mm)
G - see below
H - 5-1/32" (127.6 mm)
J - 6-9/32" (159.6 mm)
K - 7/16" (11.1 mm)
L - see below
M - 1/2" (12.7 mm)
N - 8-1/32" (203.4 mm)
P - 6-31/32" (176.6 mm)
Q - see below
R - see below
S - 5-1/32" (127.6 mm)

	"A"	"G"	"L"	"Q"	"R"
PX10P-AXS-, BXS-	14-7/32" (361.2 mm)	14-27/32" (376.5 mm)	2" (50.8 mm)	2-3/8" (59.7 mm)	14-11/32" (364.0 mm)
PX10P-FXS-XXX	16-1/32" (407.3 mm)	16-1/32" (407.0 mm)	-----	4-1/16" (103.0 mm)	16-1/32" (407.3 mm)
PX10P-YXS-XXX	14-7/32" (361.2 mm)	16" (406.3 mm)	1-1/32" (25.6 mm)	2-3/8" (59.7 mm)	14-11/32" (364.0 mm)

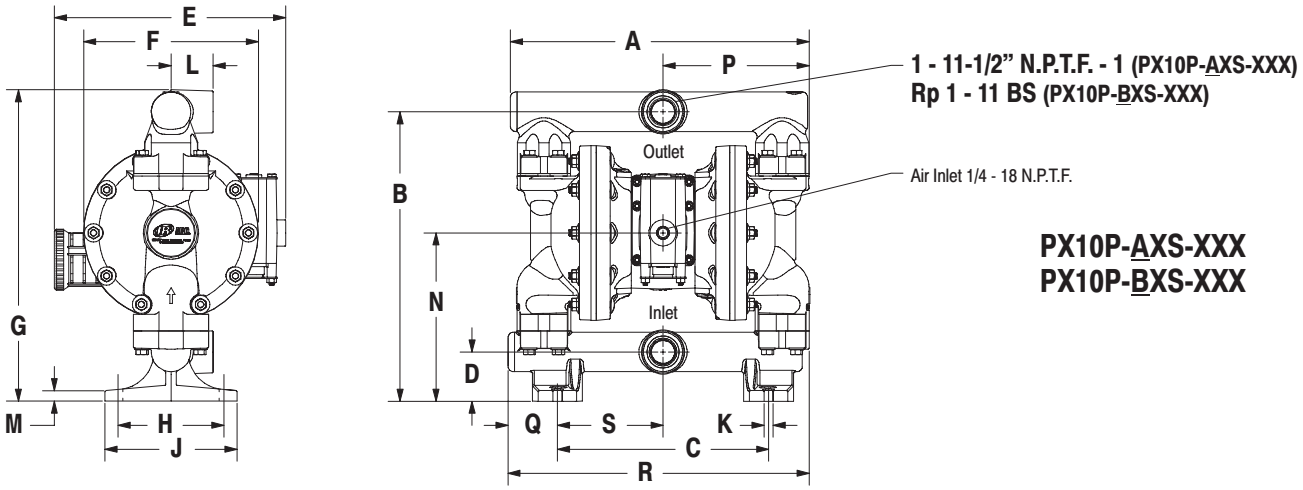

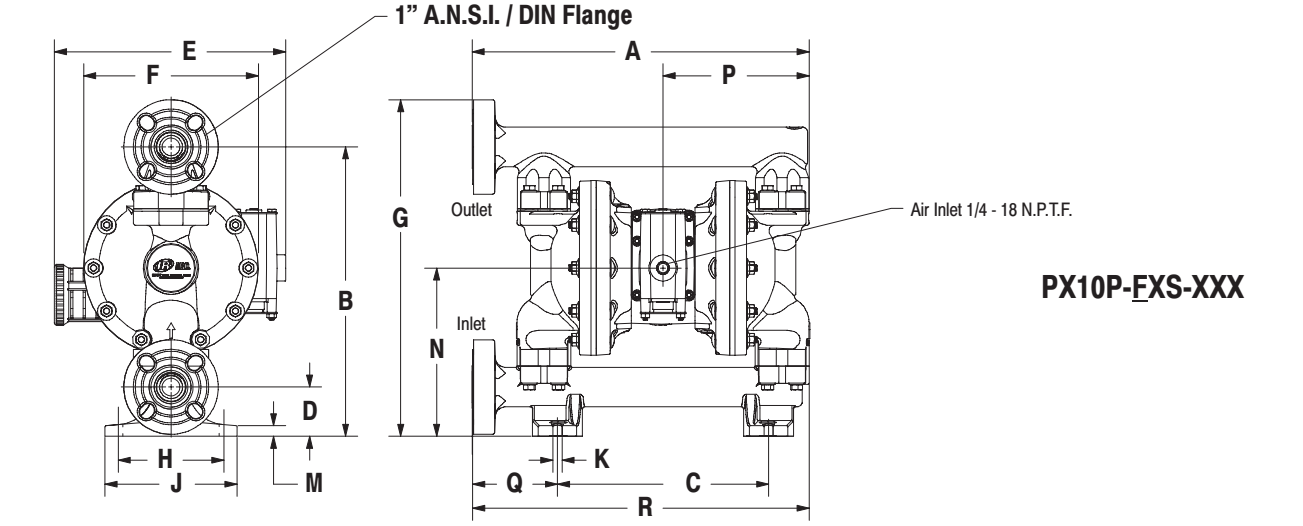

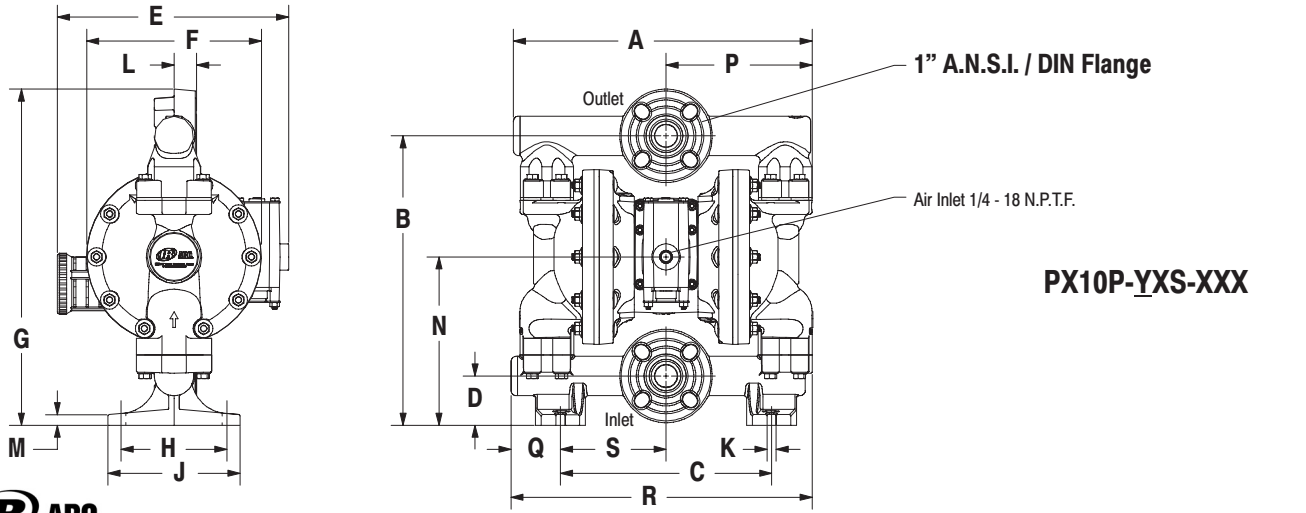

ARO

Figure 4

PN 97999-1061

Installation,
Operation, and
Maintenance Manual

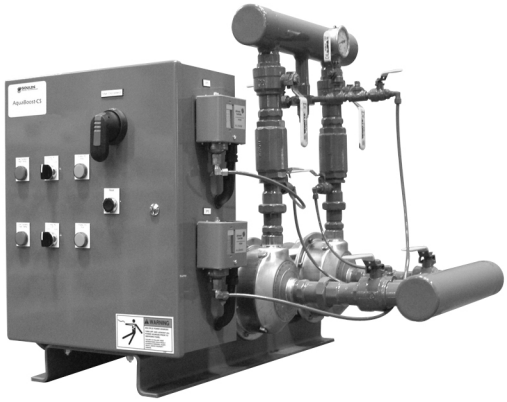

Constant Speed

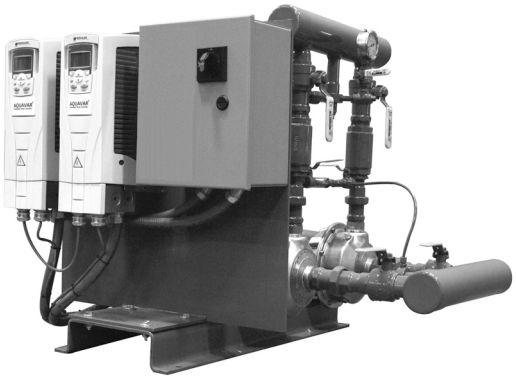

Variable Speed

AquaBoost CS and VS Pumping Packages

GOULDS
WATER TECHNOLOGY
a xylem brand

Table of Contents

Introduction and Safety....3
Introduction....3
Safety....3
Safety terminology and symbols....3
Environmental safety....4
Recycling guidelines....5
User safety....5
Precautions during work....5
Wash the skin and eyes....6
Product warranty....6

Transportation and Storage....7
Inspect the delivery....7
Inspect the package....7
Inspect the unit....7
Transportation guidelines....7
Lifting methods....7
Storage guidelines....7
Storage location....7
Long-term storage....7

Product Description....9
General description....9
Operational limits....9
Package information....9
Nameplate information....12
Owner's information....13

Installation....14
Field connections....14
Field piping diagrams....15
Wiring diagrams....19
Earth (ground) connections....25
Pump package location guidelines....25
Foundation requirements....25
Level the base on a concrete foundation....26
Connect the optional storage tank....26
Connect the optional low-suction pressure switch....27
Piping checklist....27
Fastening....28

Commissioning, Startup, Operation, and Shutdown....29
Preparation for startup....29
Final installation checks....29
Final adjustments....30
Pump package operation description....32
Constant speed operation....32
Variable speed operation....37

Maintenance....38
Precautions....38
Monthly maintenance....38

Troubleshooting.....39
Pump station troubleshooting.....39
The pump station does not power up.....39
The station powers up, but the pumps do not run.....39
The pumps run but do not build desired pressure.....40
The pump station experiences excessive vibration.....41
The pump station does not shut down and no water is used.....41
The pump station cycles or hunts erratically.....42

Other Relevant Documentation or Manuals.....43
Manuals for AquaBoost components.....43

Introduction and Safety

Introduction

Purpose of this manual

The purpose of this manual is to provide necessary information for:

- Installation
- Operation
- Maintenance



CAUTION:

Read this manual carefully before installing and using the product. Improper use of the product can cause personal injury and damage to property, and may void the warranty.

NOTICE:

Save this manual for future reference, and keep it readily available at the location of the unit.

Safety



WARNING:

- The operator must be aware of safety precautions to prevent physical injury.
- Any pressure-containing device can explode, rupture, or discharge its contents if it is over-pressurized. Take all necessary measures to avoid over-pressurization.
- Operating, installing, or maintaining the unit in any way that is not covered in this manual could cause death, serious personal injury, or damage to the equipment. This includes any modification to the equipment or use of parts not provided by Xylem. If there is a question regarding the intended use of the equipment, please contact an Xylem representative before proceeding.
- This manual clearly identifies accepted methods for disassembling units. These methods must be adhered to. Trapped liquid can rapidly expand and result in a violent explosion and injury. Never apply heat to impellers, propellers, or their retaining devices to aid in their removal.
- Do not change the service application without the approval of an authorized Xylem representative.



CAUTION:

You must observe the instructions contained in this manual. Failure to do so could result in physical injury, damage, or delays.

Safety terminology and symbols

About safety messages

It is extremely important that you read, understand, and follow the safety messages and regulations carefully before handling the product. They are published to help prevent these hazards:

- Personal accidents and health problems
- Damage to the product
- Product malfunction

Hazard levels

Hazard level	Indication
 DANGER:	A hazardous situation which, if not avoided, will result in death or serious injury
 WARNING:	A hazardous situation which, if not avoided, could result in death or serious injury
 CAUTION:	A hazardous situation which, if not avoided, could result in minor or moderate injury
NOTICE:	• A potential situation which, if not avoided, could result in undesirable conditions • A practice not related to personal injury

Hazard categories

Hazard categories can either fall under hazard levels or let specific symbols replace the ordinary hazard level symbols.

Electrical hazards are indicated by the following specific symbol:



Electrical Hazard:

These are examples of other categories that can occur. They fall under the ordinary hazard levels and may use complementing symbols:

- Crush hazard
- Cutting hazard
- Arc flash hazard

Environmental safety

The work area

Always keep the station clean to avoid and/or discover emissions.

Waste and emissions regulations

Observe these safety regulations regarding waste and emissions:

- Appropriately dispose of all waste.
- Handle and dispose of the processed liquid in compliance with applicable environmental regulations.
- Clean up all spills in accordance with safety and environmental procedures.
- Report all environmental emissions to the appropriate authorities.



WARNING:
Do NOT send the product to the Xylem manufacturer if it has been contaminated by any nuclear radiation. Inform Xylem so that accurate actions can take place.

Electrical installation

For electrical installation recycling requirements, consult your local electric utility.

Recycling guidelines

Always follow local laws and regulations regarding recycling.

User safety

General safety rules

These safety rules apply:

- Always keep the work area clean.
- Pay attention to the risks presented by gas and vapors in the work area.
- Avoid all electrical dangers. Pay attention to the risks of electric shock or arc flash hazards.
- Always bear in mind the risk of drowning, electrical accidents, and burn injuries.

Safety equipment

Use safety equipment according to the company regulations. Use this safety equipment within the work area:

- Hard hat
- Safety goggles, preferably with side shields
- Protective shoes
- Protective gloves
- Gas mask
- Hearing protection
- First-aid kit
- Safety devices

NOTICE:
Never operate a unit unless safety devices are installed. Also see specific information about safety devices in other chapters of this manual.

Electrical connections

Electrical connections must be made by certified electricians in compliance with all international, national, state, and local regulations. For more information about requirements, see sections dealing specifically with electrical connections.

Precautions during work

Observe these safety precautions when you work with the product or are in connection with the product:

- Never work alone.
- Always wear protective clothing and hand protection.
- Stay clear of suspended loads.
- Always lift the product by its lifting device.
- Beware of the risk of a sudden start if the product is used with an automatic level control.
- Beware of the starting jerk, which can be powerful.

- Rinse the components in water after you disassemble the pump.
- Do not exceed the maximum working pressure of the pump.
- Do not open any vent or drain valve or remove any plugs while the system is pressurized. Make sure that the pump is isolated from the system and that pressure is relieved before you disassemble the pump, remove plugs, or disconnect piping.
- Never operate a pump without a properly installed coupling guard.

Wash the skin and eyes

Follow these procedures for chemicals or hazardous fluids that have come into contact with your eyes or your skin:

Condition	Action
Chemicals or hazardous fluids in eyes	1. Hold your eyelids apart forcibly with your fingers. 2. Rinse the eyes with eyewash or running water for at least 15 minutes. 3. Seek medical attention.
Chemicals or hazardous fluids on skin	1. Remove contaminated clothing. 2. Wash the skin with soap and water for at least 1 minute. 3. Seek medical attention, if necessary.

Product warranty

Coverage

Xylem undertakes to remedy faults in products from Xylem under these conditions:

- The faults are due to defects in design, materials, or workmanship.
- The faults are reported to an Xylem representative within the warranty period.
- The product is used only under the conditions described in this manual.
- The monitoring equipment incorporated in the product is correctly connected and in use.
- All service and repair work is done by Xylem-authorized personnel.
- Genuine Xylem parts are used.
- Only Ex-approved spare parts and accessories authorized by Xylem are used in Ex-approved products.

Limitations

The warranty does not cover faults caused by these situations:

- Deficient maintenance
- Improper installation
- Modifications or changes to the product and installation made without consulting Xylem
- Incorrectly executed repair work
- Normal wear and tear

Xylem assumes no liability for these situations:

- Bodily injuries
- Material damages
- Economic losses

Warranty claim

Xylem products are high-quality products with expected reliable operation and long life. However, should the need arise for a warranty claim, then contact your Xylem representative.

Transportation and Storage

Inspect the delivery

Inspect the package

1. Inspect the package for damaged or missing items upon delivery.
2. Note any damaged or missing items on the receipt and freight bill.
3. File a claim with the shipping company if anything is out of order.
   If the product has been picked up at a distributor, make a claim directly to the distributor.

Inspect the unit

1. Remove packing materials from the product.
   Dispose of all packing materials in accordance with local regulations.
2. Inspect the product to determine if any parts have been damaged or are missing.
3. If applicable, unfasten the product by removing any screws, bolts, or straps.
   For your personal safety, be careful when you handle nails and straps.
4. Contact your sales representative if anything is out of order.

Transportation guidelines

Lifting methods



WARNING:

- Assembled units and their components are heavy. Failure to properly lift and support this equipment can result in serious physical injury and/or equipment damage. Lift equipment only at the specifically identified lifting points. Lifting devices such as eyebolts, slings, and spreaders must be rated, selected, and used for the entire load being lifted.
- Crush hazard. The unit and the components can be heavy. Use proper lifting methods and wear steel-toed shoes at all times.

Storage guidelines

Storage location

The product must be stored in a covered and dry location free from heat, dirt, and vibrations.

NOTICE:

- Protect the product against humidity, heat sources, and mechanical damage.
- Do not place heavy weights on the packed product.

Long-term storage

If the unit is stored for more than 6 months, these requirements apply:

- Store in a covered and dry location.
- Store the unit free from heat, dirt, and vibrations.
- Rotate the pump shaft by hand several times at least every three months.

Treat bearings and machined surfaces so that they are well preserved. Refer to the drive unit and coupling manufacturers for their long-term storage procedures.

For questions about possible long-term storage treatment services, please contact your local Xylem sales representative.

Product Description

General description

AquaBoost CS pumping package

Depending upon the pumping capacity required, a simplex (one-pump) type or a duplex (two-pump) type is used. In both types, a pressure switch starts and stops the pump.

The AquaBoost Constant Speed pumping package operates pumps across the line to increase the domestic water pressure up to 55 psi above that of the city water pressure.

AquaBoost VS pumping package

The AquaBoost Variable Speed pumping package can precisely match the pump discharge pressure to the system pressure by varying the speed of the pump. This is accomplished by using the variable-speed controllers such as the AquaBoost II and Aquavar CPC.

The pressure transducer monitors the system pressure, allowing the controller to start and regulate the pump speed. AquaBoost VS is available in simplex and duplex configurations.

Operational limits

Ambient temperature and humidity

All electrical equipment is susceptible to failure if operated in ambient temperatures outside of its rating. Do not operate the unit outside these extremes.

Characteristic	Specification
Operating temperature range	32°F to 105°F (0°C to 40°C)
Maximum relative humidity	95% non-condensing

Package information

AquaBoost CS simplex

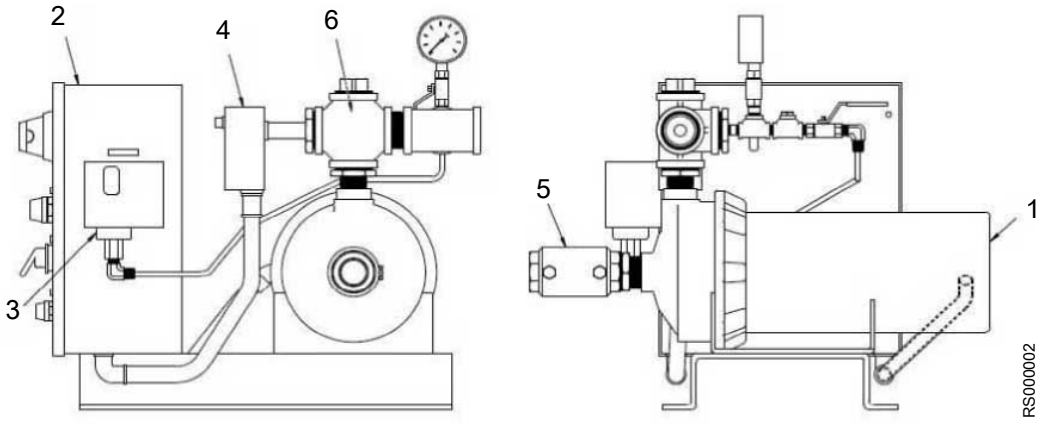

1. Pump: NPE with TEFC motor
2. Control panel with disconnect switch
3. Pressure switch
4. Temperature limit switch
5. Check valve, stainless steel
6. Stainless steel pump trim assembly

AquaBoost CS duplex

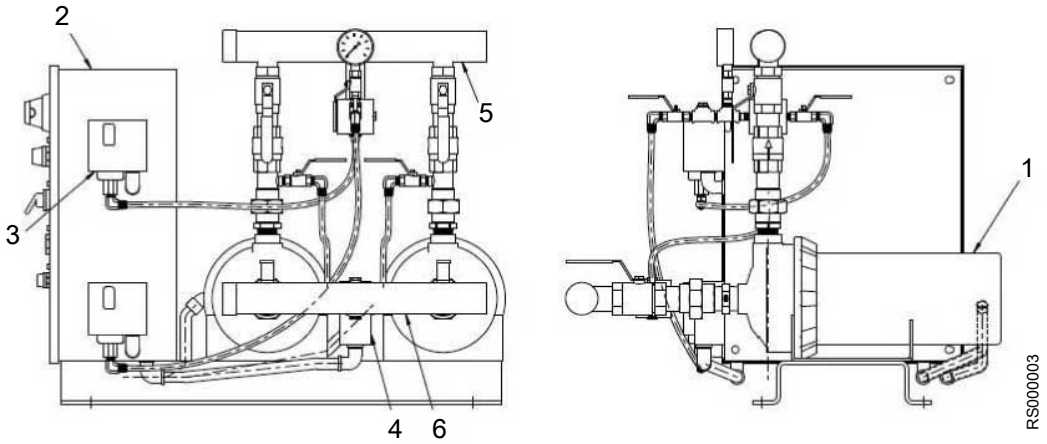

1. Pump: NPE with TEFC motor
2. Control panel with disconnect switch
3. Pressure switch, one per pump
4. Temperature limit switch
5. Discharge header: copper L-type
6. Suction header: copper L-type

AquaBoost VS simplex

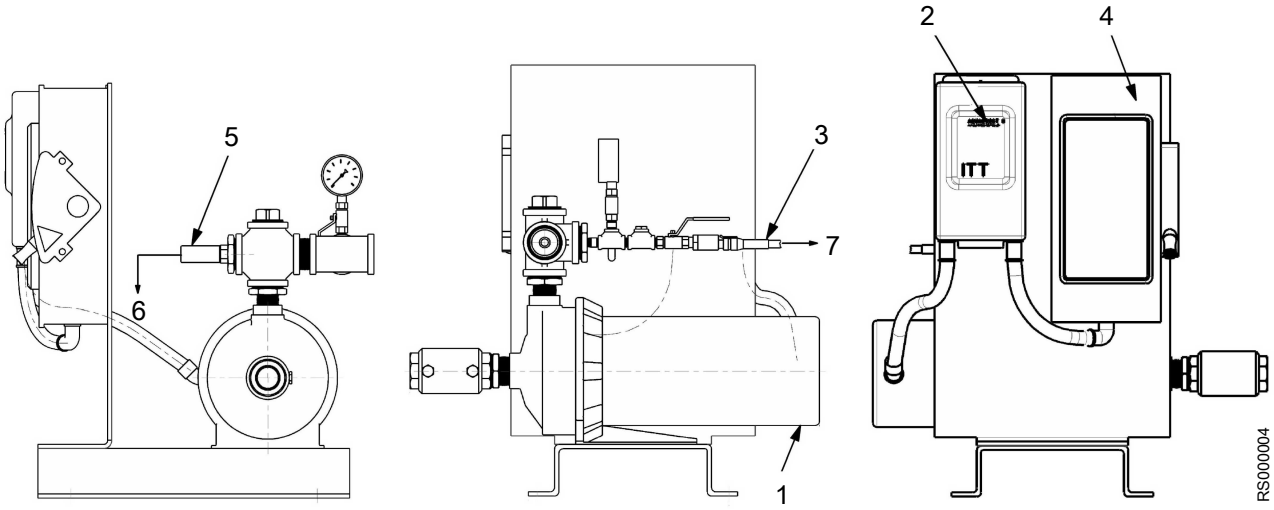

This variable-speed configuration uses the AquaBoost II controller model 1151AB2 or 2AB2 (for single-phase power supply: 115V – 0.75 hp; 230V – 1.5 to 2 hp range).

1. Pump: NPE with TEFC motor
2. AquaBoost II controller
3. Transducer assembly
4. Safety switch
5. Temperature relief valve
6. To drain
7. To controller

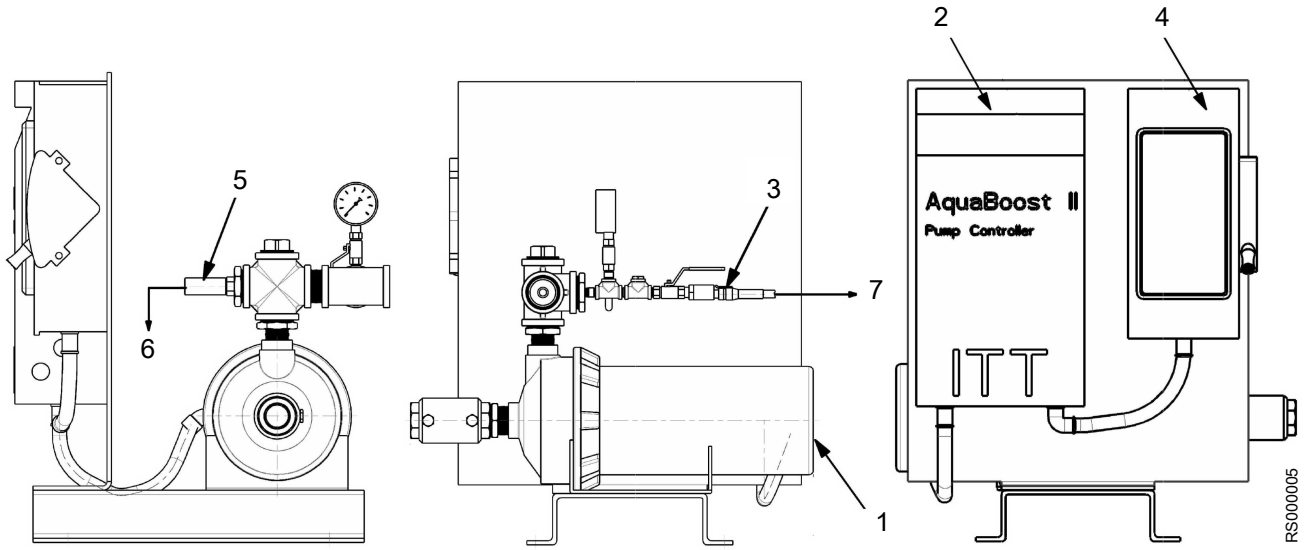

This variable-speed configuration uses the AquaBoost II controller model 3AB2 or 5AB2 (for single-phase power supply: 3V – 5 hp motors).

1. Pump: NPE with TEFC motor
2. AquaBoost II controller
3. Transducer assembly
4. Safety switch
5. Temperature relief valve
6. To drain
7. To controller

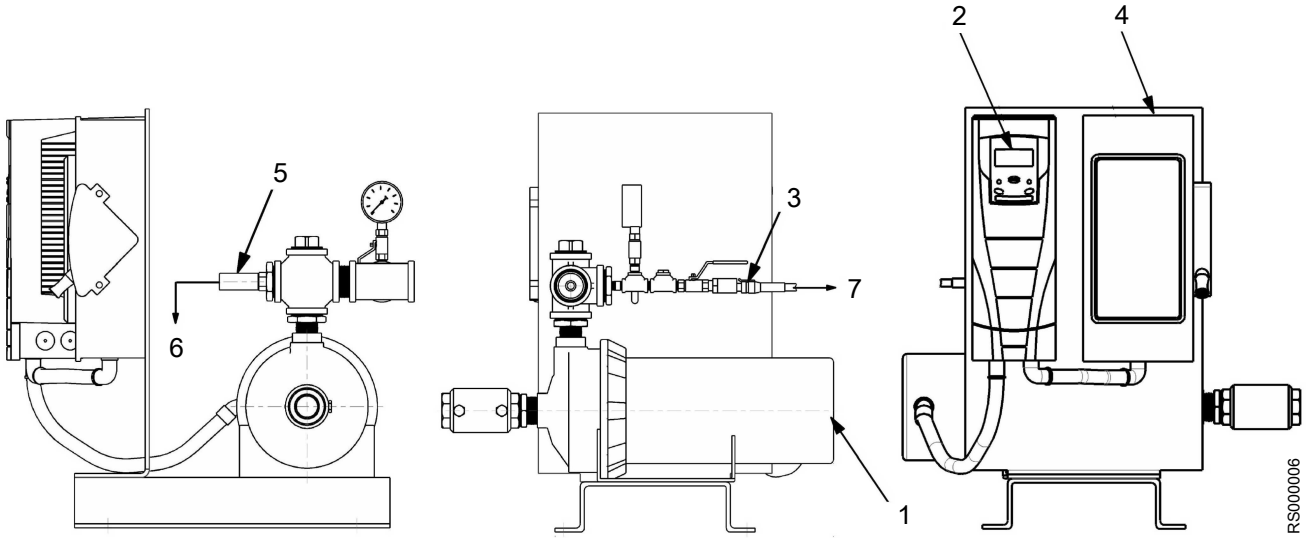

This variable-speed configuration uses the Aquavar CPC controller (for 3–phase power supply: 1.5 to 5 hp range).

1. Pump: NPE with TEFC motor
2. Temperature relief valve
3. Transducer assembly
4. Aquavar CPC controller
5. Safety switch
6. To drain
7. To controller

AquaBoost VS duplex

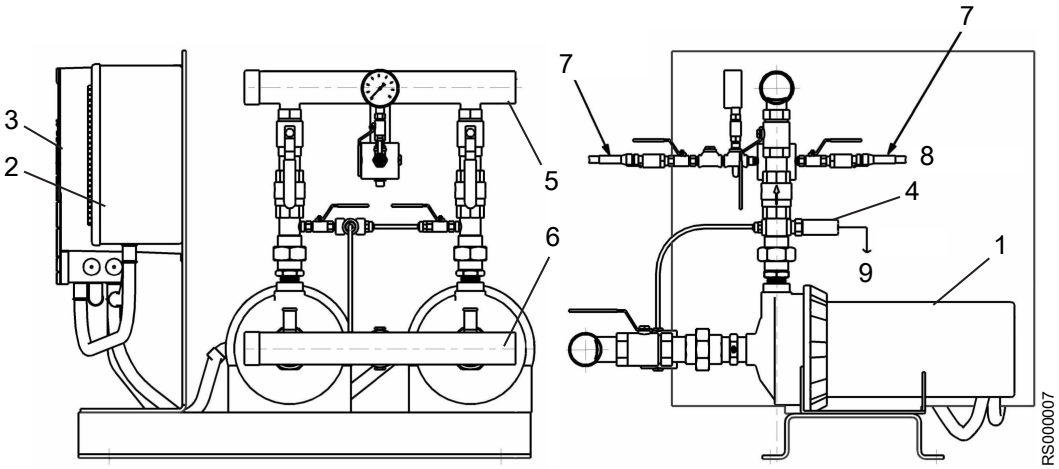

This variable-speed duplex configuration uses the Aquavar CPC controller (for 3–phase power supply: 1.5 to 5 hp range).

1. Pump: NPE with TEFC motor
2. Safety switch single-point power panel
3. Aquavar CPC controller
4. Temperature relief valve
5. Discharge header: copper L-type
6. Suction header: copper L-type
7. Pressure transducer assembly
8. To controller
9. To drain

Nameplate information

Nameplate

Every pump station has a nameplate that provides information about the pump station. The pump station nameplate is located on the outside of the control enclosure door.

When ordering spare parts, please be prepared to identify the nameplate information when contacting the factory.

- Model
- Size
- Serial number
- Item numbers of the required parts

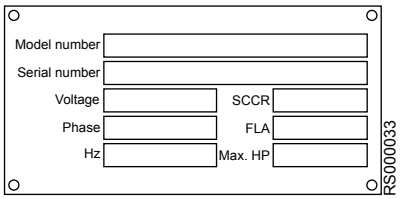

Nameplate field	Explanation
Model number	The model number of the pump station
Serial number	The serial number of the pump station
Voltage	Input voltage required for the pump station
Phase	Single-phase or 3–phase
Hz	Frequency

Nameplate field	Explanation
SCCR	Short circuit current rating
FLA	Full load amps
Max. HP	Maximum horsepower

Model number designation

Number of pumps	Pump model / rpm	HP	Voltage / Phase	Impeller diameter (inches)	Control
1	A (1x1-1/4, 3600)	05 = 1/2	1 = 115/1/60	A = 4-5/8	–CS = constant speed
2	B (1-1/4x1-1/2, 3600)	07 = 3/4	2 = 208/3/60	B = 5-1/16	–VS = variable speed
		10 = 1	3 = 380/3/50	C = 5-3/16	
		15 = 1.5	4 = 460/3/60	D = 5-3/4	
		20 = 2	5 = 575/3/60	E = 5-15/16	
		30 = 3	6 = 230/1/60	F = 6-1/8	
		50 = 5	7 = other	Z = other	
			8 = 230/3/60		
			A = 208–230/3/60*		
			B = 208–230/1/60*		
*Variable speed only					

Owner's information

Fill in the right-hand column with the information specific to your pump station.

AquaBoost CS/VS model number		
Pump model number		
Pump serial number		
Control panel model number		
Dealer		
Dealer phone number		
Date of purchase		
Date of installation		
Electrical ratings at startup	Current	
	Voltage	
	Phase	

Installation

Field connections

Review the field piping diagrams and wiring diagrams before you install and operate the unit.

Electrical precautions



WARNING:

Electrical shock hazard. The electrical supply must match the control panel nameplate specification. Incorrect voltage can cause a fire, which damages the electrical components and voids the warranty. Failure to follow these instructions could result in serious personal injury or death, or property damage.

NOTICE:

Electrical connections must be made by certified electricians in compliance with all international, national, state, and local rules.

Power wiring

Select power wire types and sizes based upon conformance with the National Electrical Code and all local codes and restrictions. In addition, only copper (Cu) wire rated for at least 167°F (75°C) can be used for the power connections. Refer to the input current as listed on the motor nameplate when sizing wire.

Power supply requirements

The power supply required for the AquaBoost CS unit depends on its model number. It can be one of the following with a dedicated ground wire:

- 115/1/60
- 230/1/60
- 208, 230, 460/3/60
- 380/3/50
- 575/3/60

The power supply required for the AquaBoost VS unit depends on its model number. It can be one of the following with a dedicated ground wire:

- 115/1/60
- 230/1/60
- 208, 230, 460, 575/3/60
- 380/3/50



WARNING:

Electrical shock hazard. Conduit grounds are not adequate. You must attach a separate earth (ground) wire to the earth (ground) lug provided in the enclosure in order to avoid potential safety hazards. Failure to follow these instructions can result in serious personal injury, death, or property damage.

Input voltage tolerance

The input voltage tolerance is – 10% of the voltage indicated on the nameplate.

Overload protection for constant-speed units

Motor type	Overload protection	Description
Single-phase	Internal	• Disconnecting means • Fuses for short-circuit protection
Three-phase	External in the control panel	• Disconnecting means • GV2Ps / manual starters with thermal overload for short-circuit protection in the control panel

Overload protection for variable-speed units

Variable-speed units have a single-point power panel with fuses for protection against voltage spikes. In addition, the controllers have inherent features that protect the unit against:

- short circuit
- undervoltage
- overload
- motor temperature
- dead heading
- run out
- suction loss
- sensor fault
- bound pump
- overvoltage
- static discharge

Field piping diagrams

AquaBoost CS simplex

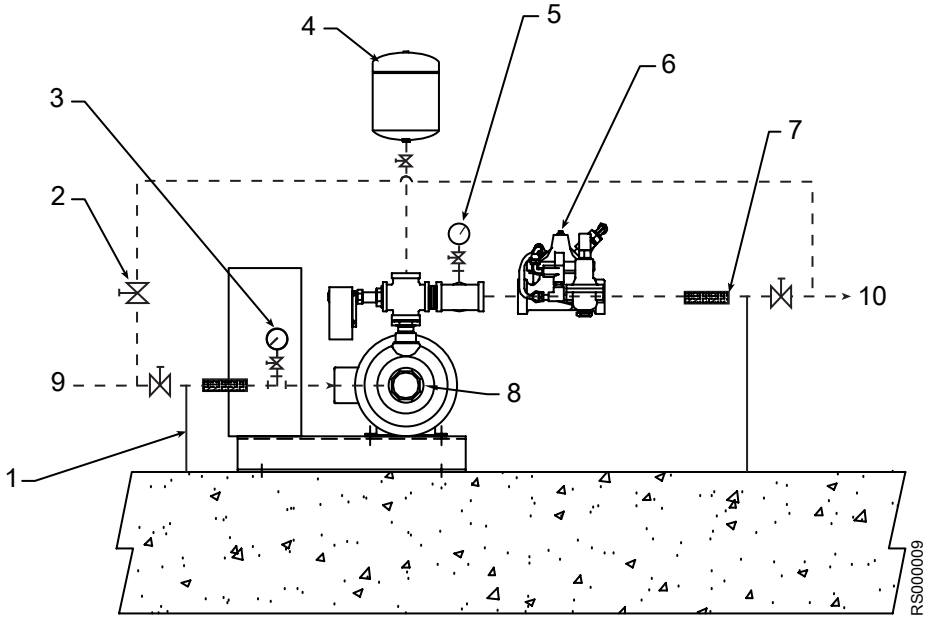

Typical field piping arrangement for the AquaBoost Constant Speed simplex pumping package.

1. Anchor the pipe securely if vibration eliminators are used.
2. If a bypass line is installed, then this valve must be kept closed during normal operation. Do not install a check valve.
3. Suction gauge, recommended
4. Optional tank

5. Discharge gauge
6. Optional pressure reducing valve
7. Vibration eliminator
8. 1/4 in. inlet tap on the check valve for low-suction pressure switch
9. City supply
10. To system

_ _ _ _ Dashed lines indicate field installation.

AquaBoost CS duplex

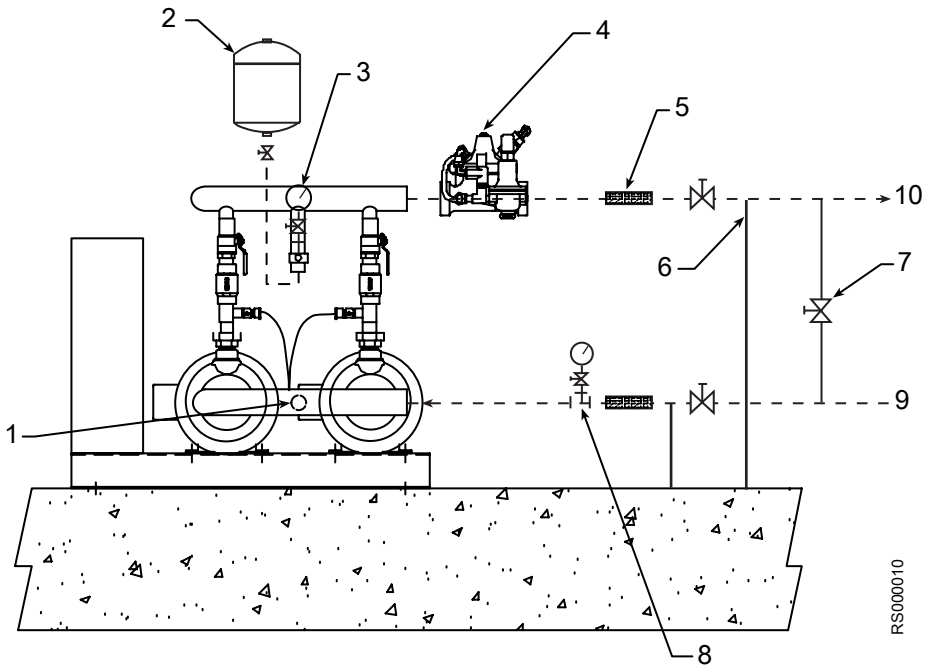

Typical field piping arrangement for the AquaBoost Constant Speed duplex pumping package.

1. 1/4 in. tap on the suction manifold for low-suction pressure switch
2. Optional tank
3. Discharge gauge
4. Optional pressure reducing valve
5. Vibration eliminator
6. Anchor the pipe securely if vibration eliminators are used.
7. If a bypass line is installed, then this valve must be kept closed during normal operation. Do not install a check valve.
8. Suction gauge, recommended
9. City supply
10. To system

_ _ _ _ Dashed lines indicate field installation.

AquaBoost VS simplex

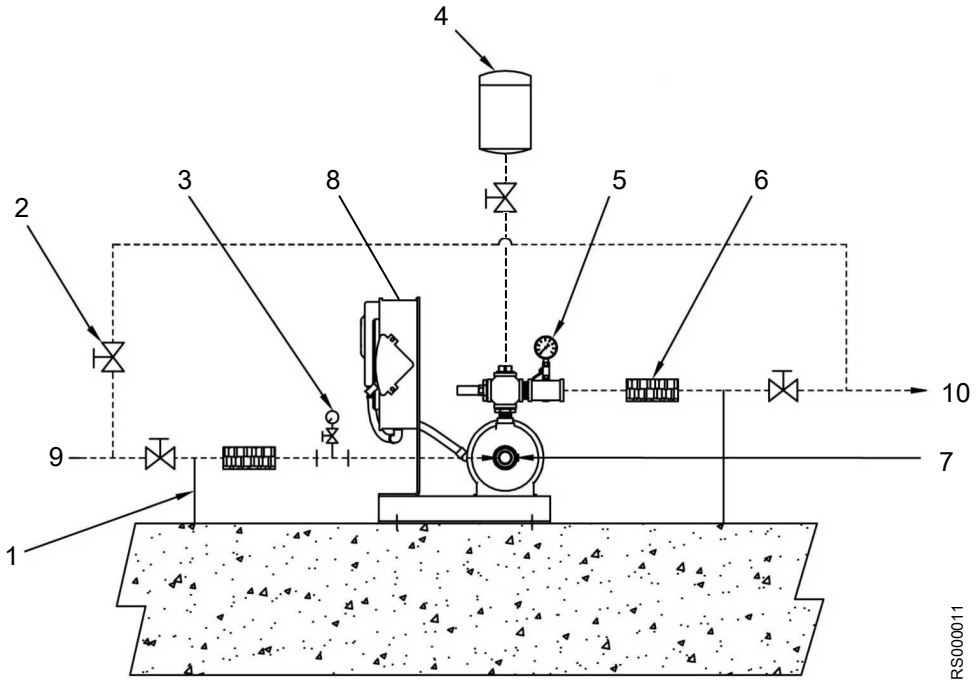

Typical field piping arrangement for the AquaBoost Variable Speed simplex pumping package.

1. Anchor the pipe securely if vibration eliminators are used.
2. If a bypass line is installed, then this valve must be kept closed during normal operation. Do not install a check valve.
3. Suction gauge, recommended
4. Optional tank
5. Discharge gauge
6. Vibration eliminator
7. 1/4 in. inlet tap on the check valve for low-suction pressure switch
8. Controller: AquaBoost II or Aquavar CPC
9. City supply
10. To system

_ _ _ _ Dashed lines indicate field installation.

AquaBoost VS duplex

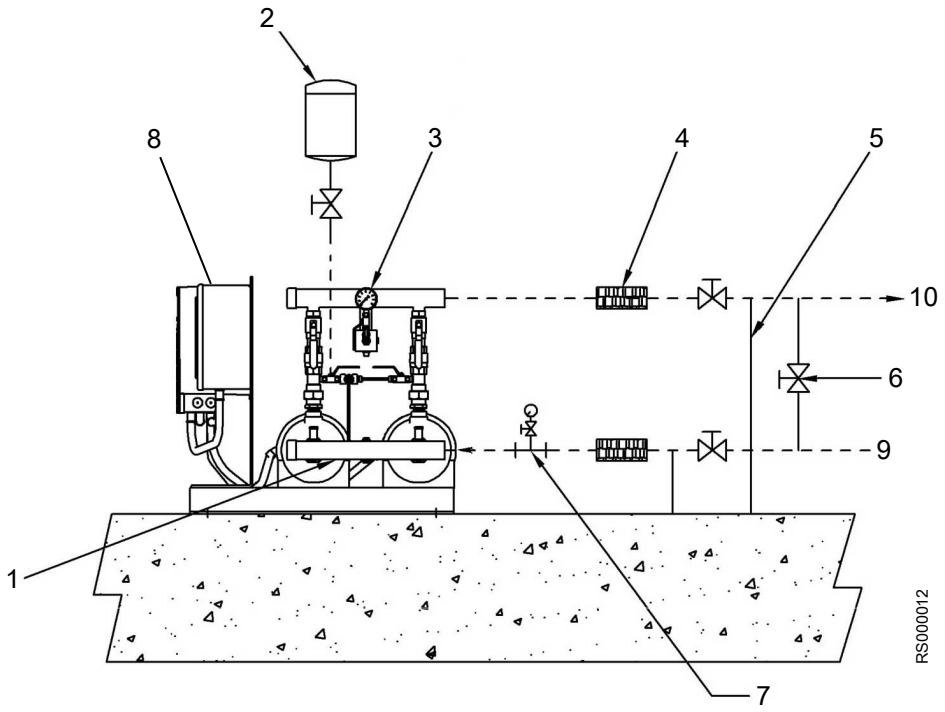

Typical field piping arrangement for the AquaBoost Variable Speed duplex pumping package.

1. 1/4 in. tap on the suction manifold for low-suction pressure switch
2. Optional tank
3. Discharge gauge
4. Vibration eliminator
5. Anchor the pipe securely if vibration eliminators are used.
6. If a bypass line is installed, then this valve must be kept closed during normal operation. Do not install a check valve.
7. Suction gauge, recommended
8. Controller: Aquavar CPC
9. City supply
10. To system

_ _ _ _ Dashed lines indicate field installation.

Wiring diagrams

AquaBoost CS simplex – 230/1/60 up to 5 hp

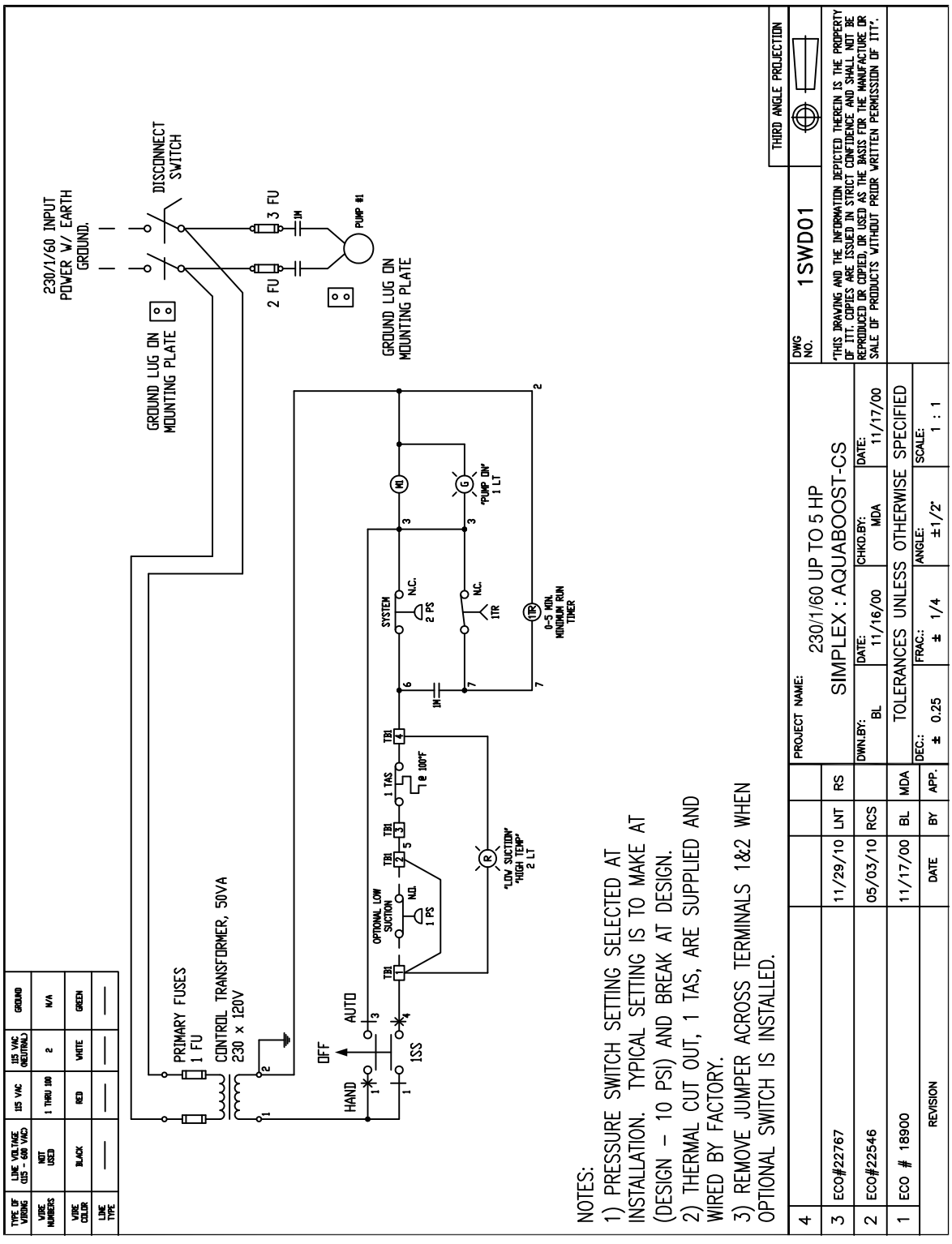

AquaBoost CS simplex – 575/460/208-230/3/60, 380/3/50 up to 5 hp

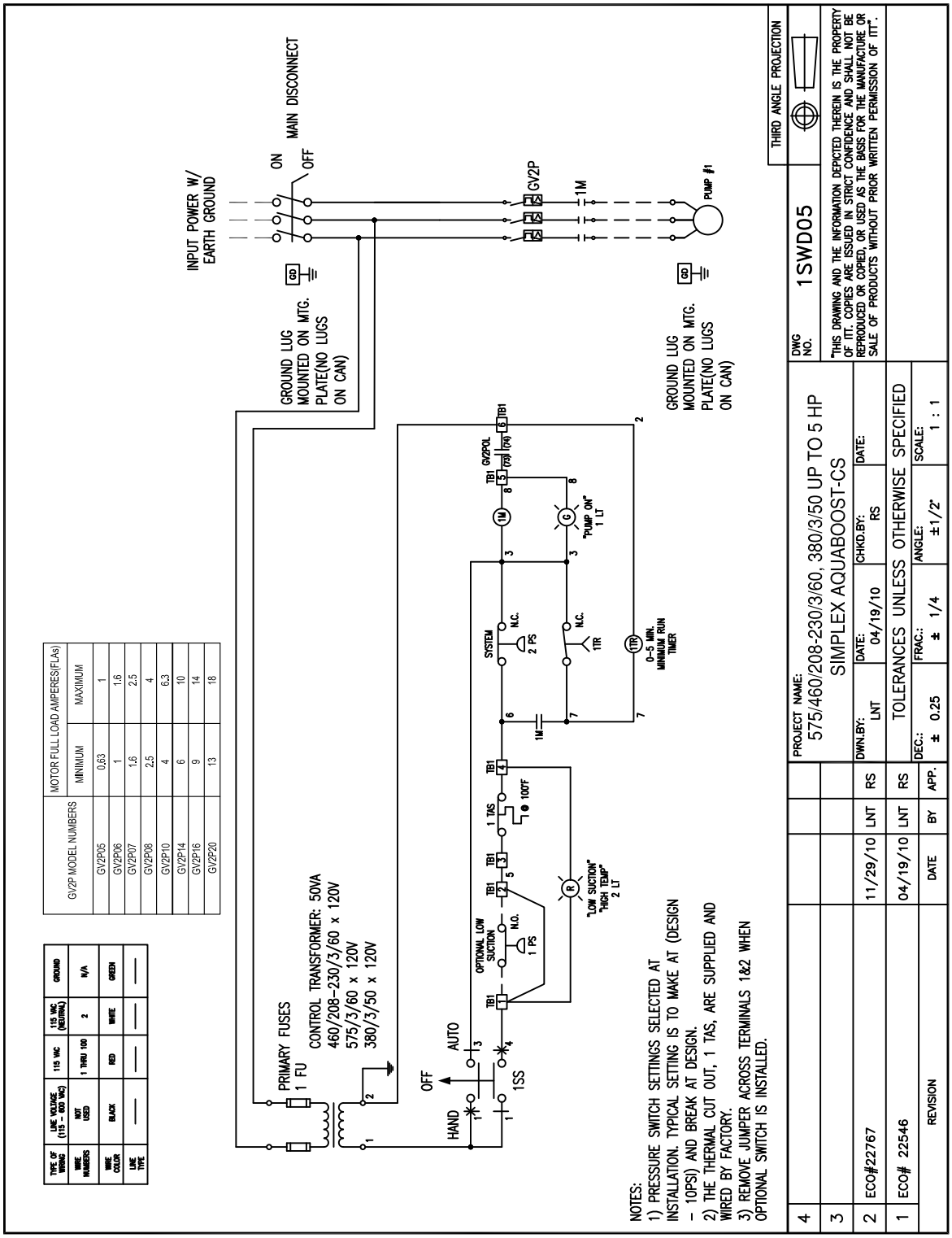

TYPE OF WIRING	LINE VOLTAGE (115 – 600 VAC)	115 VAC	115 VAC (NEUTRAL)	GROUND
WIRE NUMBERS	NOT USED	1 THRU 100	2	N/A
WIRE COLOR	BLACK	RED	WHITE	GREEN
LINE TYPE	——	——	——	——

GV2P MODEL NUMBERS	MOTOR FULL LOAD AMPERES(FLAs)	
	MINIMUM	MAXIMUM
GV2P05	0.63	1
GV2P06	1	1.6
GV2P07	1.6	2.5
GV2P08	2.5	4
GV2P10	4	6.3
GV2P14	6	10
GV2P16	9	14
GV2P20	13	18

4					
3					
2	ECO#22767	11/29/10	LNT	RS	
1	ECO# 22546	04/19/10	LNT	RS	
	REVISION	DATE	BY	APP.	

PROJECT NAME: 575/460/208-230/3/60, 380/3/50 UP TO 5 HP SIMPLEX AQUABOOST-CS

DWG NO. 1SWD05

THIRD ANGLE PROJECTION

DWN.BY:	DATE:	CHKD.BY:	DATE:
LNT	04/19/10	RS	

TOLERANCES UNLESS OTHERWISE SPECIFIED

DEC.:	FRAC.:	ANGLE:	SCALE:
± 0.25	± 1/4	±1/2°	1 : 1

THIS DRAWING AND THE INFORMATION DEPICTED THEREIN IS THE PROPERTY OF ITT. COPIES ARE ISSUED IN STRICT CONFIDENCE AND SHALL NOT BE REPRODUCED OR COPIED, OR USED AS THE BASIS FOR THE MANUFACTURE OR SALE OF PRODUCTS WITHOUT PRIOR WRITTEN PERMISSION OF ITT*.

RS000014

AquaBoost CS simplex – 115/1/60 up to 2 hp

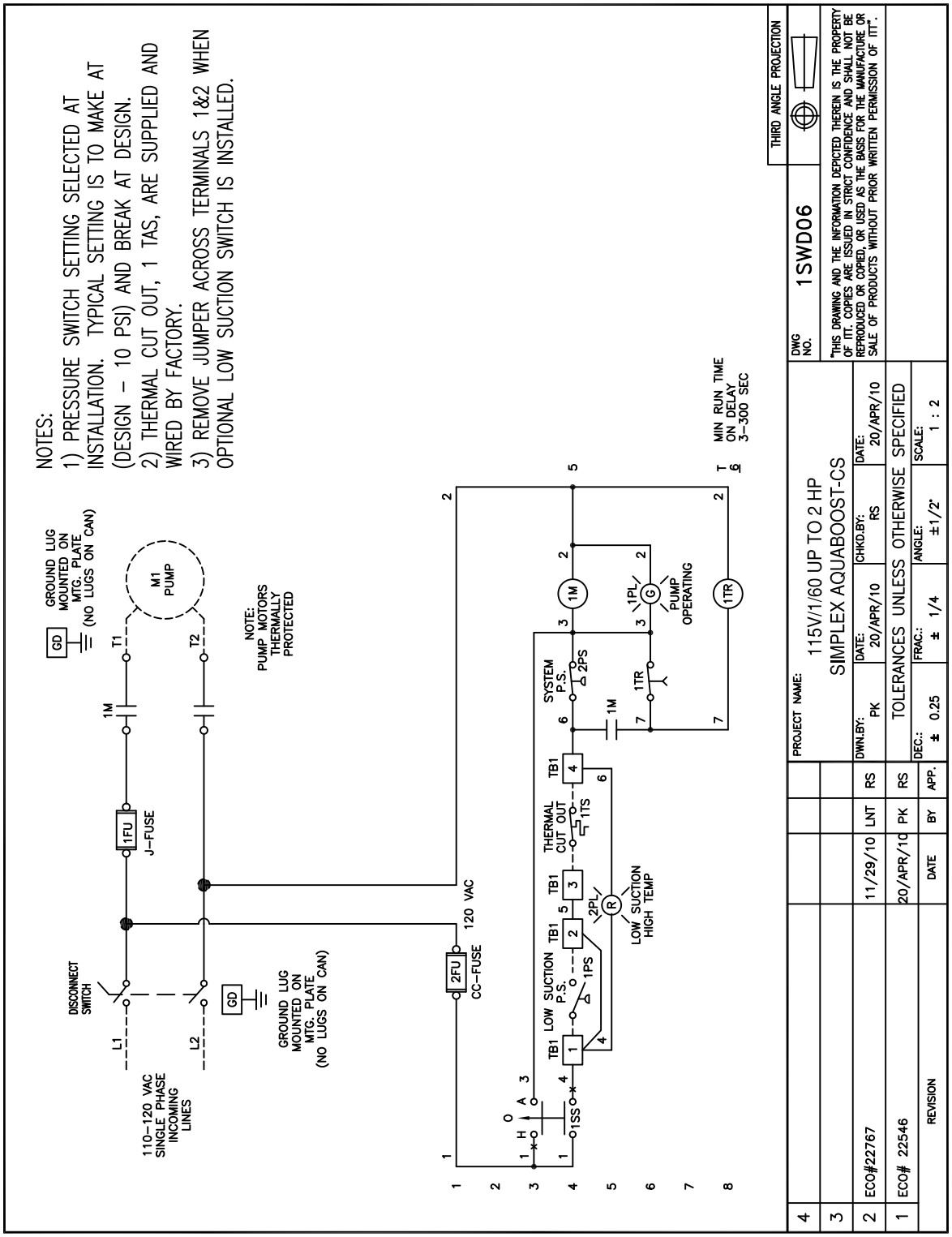

RS000015

AquaBoost CS duplex – 575/460/208-230/3/60, 380/3/50 up to 5 hp

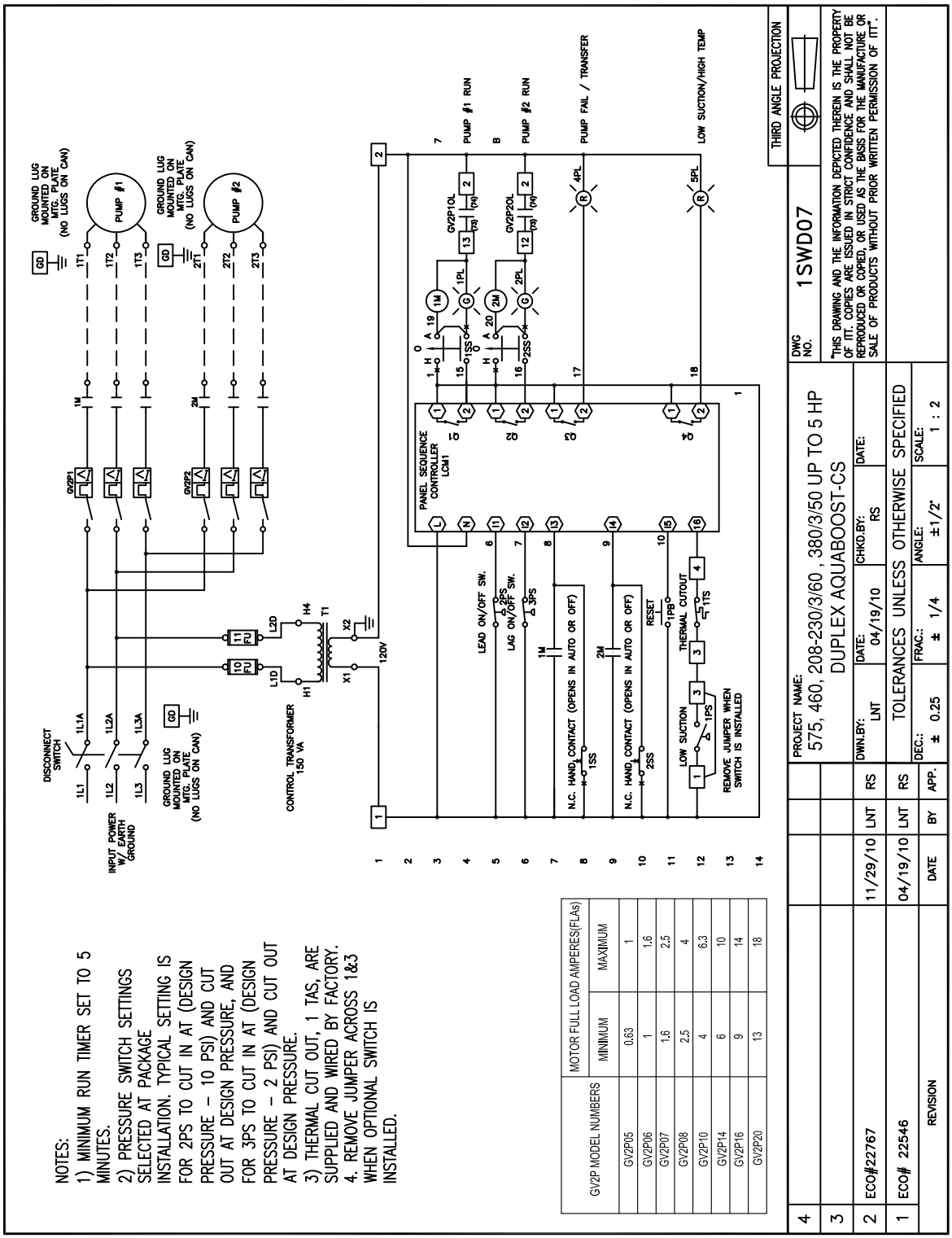

RS000016

AquaBoost CS duplex – 115/1/60 up to 1.5 hp

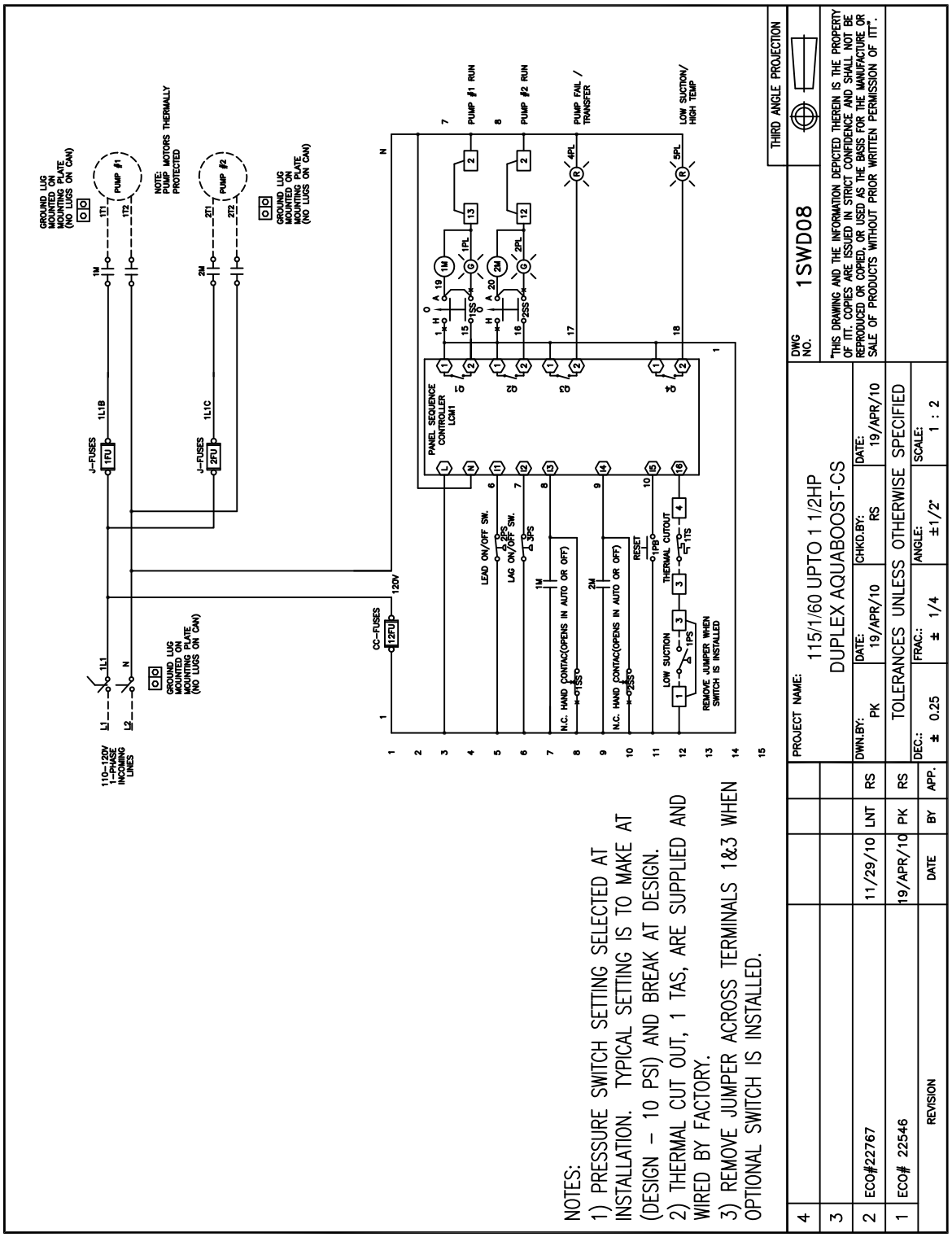

AquaBoost CS duplex – 230/1/60 up to 3 hp

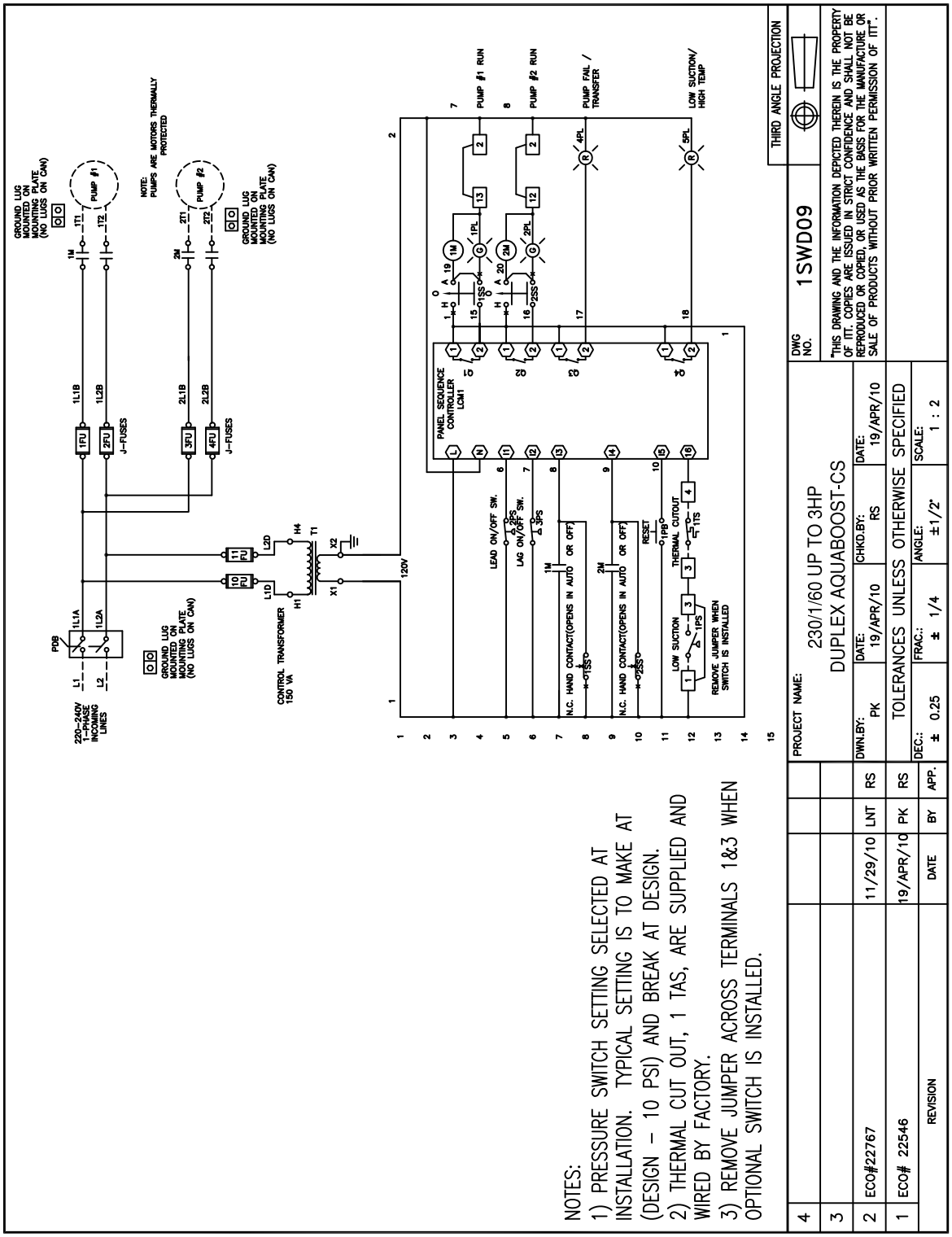

NOTES:
1) PRESSURE SWITCH SETTING SELECTED AT INSTALLATION. TYPICAL SETTING IS TO MAKE AT (DESIGN – 10 PSI) AND BREAK AT DESIGN.
2) THERMAL CUT OUT, 1 TAS, ARE SUPPLIED AND WIRED BY FACTORY.
3) REMOVE JUMPER ACROSS TERMINALS 1&3 WHEN OPTIONAL SWITCH IS INSTALLED.

4				PROJECT NAME: 230/1/60 UP TO 3HP DUPLEX AQUABOOST-CS	DWG NO. 1SWD09
3					
2	ECO#22767	11/29/10	LNT	RS	DWN.BY: PK DATE: 19/APR/10 CHKD.BY: RS DATE: 19/APR/10
1	ECO# 22546	19/APR/10	PK	RS	TOLERANCES UNLESS OTHERWISE SPECIFIED
	REVISION	DATE	BY	APP.	DEC.: ± 0.25 FRAC.: ± 1/4 ANGLE: ±1/2° SCALE: 1 : 2

THIRD ANGLE PROJECTION

THIS DRAWING AND THE INFORMATION DEPICTED THEREIN IS THE PROPERTY OF ITT. COPIES ARE ISSUED IN STRICT CONFIDENCE AND SHALL NOT BE REPRODUCED OR COPIED, OR USED AS THE BASIS FOR THE MANUFACTURE OR SALE OF PRODUCTS WITHOUT PRIOR WRITTEN PERMISSION OF ITT.

RS000018

Earth (ground) connections



WARNING:

Electrical shock hazard. Conduit grounds are not adequate. You must attach a separate earth (ground) wire to the earth (ground) lug provided in the enclosure in order to avoid potential safety hazards. Failure to follow these instructions can result in serious personal injury, death, or property damage.

A grounding terminal is provided for a dedicated earth (ground) wire connection. You must follow all provisions of the National Electrical Code and local codes.

Pump package location guidelines



WARNING:

Assembled units and their components are heavy. Failure to properly lift and support this equipment can result in serious physical injury and/or equipment damage. Lift equipment only at the specifically identified lifting points. Lifting devices such as eyebolts, slings, and spreaders must be rated, selected, and used for the entire load being lifted.

Guideline	Explanation/comment
Make sure that the space around the pump package is sufficient.	This facilitates ventilation, inspection, maintenance, and service.
If you require lifting equipment such as a hoist or tackle, make sure that there is enough space above the pump package.	This makes it easier to properly use the lifting equipment and safely remove and relocate the components to a safe location.
Protect the unit from weather and water damage due to rain, flooding, and freezing temperatures.	This is applicable if nothing else is specified.
Do not install and operate the equipment in closed systems unless the system is constructed with properly-sized safety and control devices.	Acceptable devices: • Pressure relief valves • Compression tanks • Pressure controls • Temperature controls • Flow controls If the system does not include these devices, consult the engineer or architect in charge before you operate the pump.
Take into consideration the occurrence of abnormal noise and vibration.	The best pump location for noise and vibration absorption is on a concrete floor with subsoil underneath.

Foundation requirements

Requirements

- The foundation must be able to absorb any type of vibration and form a permanent, rigid support for the unit.
- The foundation must weigh at least 2-1/2 times the weight of the pump unit.
- Provide a flat, substantial concrete foundation in order to prevent strain and distortion when you tighten the foundation bolts.
- Sleeve-type and J-type foundation bolts are most commonly used. Both designs allow movement for the final bolt adjustment.
- Tie the concrete pad in with the finished floor.

Level the base on a concrete foundation

1. Place the pump package on its concrete foundation.
2. Place 1.00 in./(25.40 mm) thick steel shims or wedges on both sides of each anchor bolt in order to support the pump package.

   Make sure you also place the shims or wedges midway between the bolts.

   This also provides a means of leveling the base.

Connect the optional storage tank

1. If the unit is a simplex configuration, then install the tank to the top connection of the discharge cross as shown:

Constant speed	Variable speed
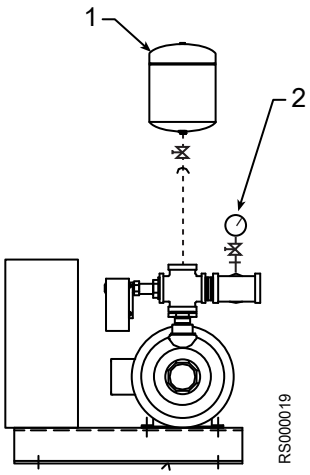 1. Storage tank 2. Discharge gauge	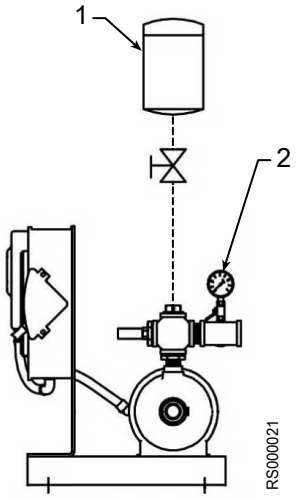 1. Storage tank 2. Discharge gauge

2. If the unit is a duplex configuration, then connect the tank to the discharge manifold as shown:

Constant speed	Variable speed
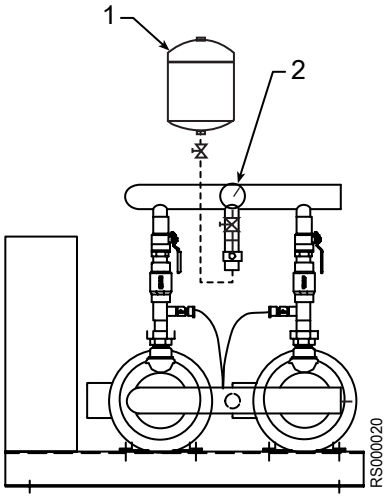 1. Storage tank 2. Discharge gauge	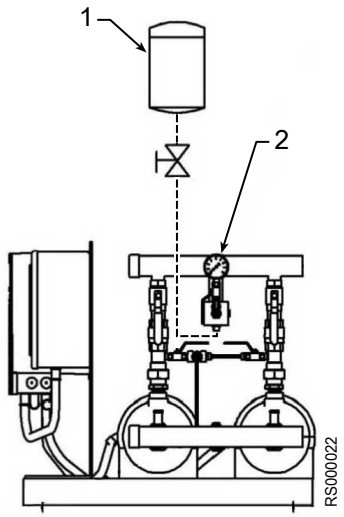 1. Storage tank 2. Discharge gauge

3. Precharge the tank according to the tank-specific IOM.

Connect the optional low-suction pressure switch

1. If the unit is a simplex configuration, then install the low-suction pressure switch piped to the 1/4 in. inlet tap on the check valve as shown:

Constant speed	Variable speed
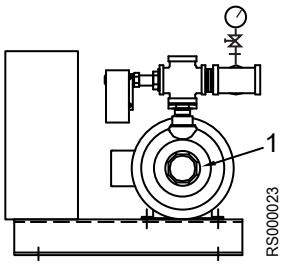	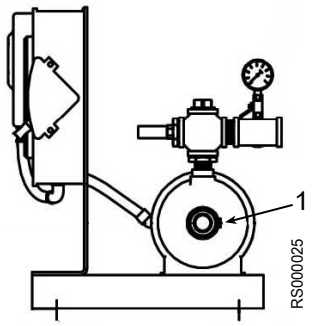
1. 1/4 in. inlet tap on check valve	1. 1/4 in. inlet tap on check valve

2. If the unit is a duplex configuration, then install the low-suction pressure switch piped to the 1/4 in. tap on the suction manifold as shown:

Constant speed	Variable speed
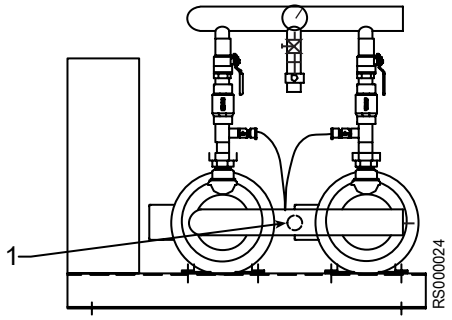	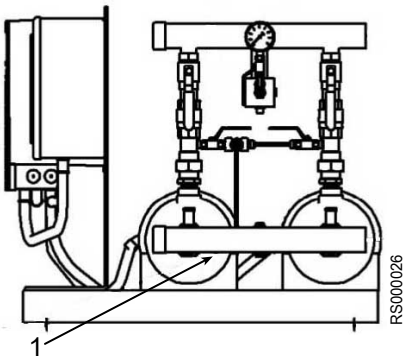
1. 1/4 in. inlet tap on check valve	1. 1/4 in. inlet tap on check valve

Piping checklist



WARNING:

- The heating of water and other fluids causes volumetric expansion. The associated forces can cause the failure of system components and the release of high-temperature fluids. In order to prevent this, install properly sized and located compression tanks and pressure-relief valves. Failure to follow these instructions can result in serious personal injury or death, or property damage.
- Avoid serious personal injury and property damage. Make sure that the flange bolts are adequately torqued.
- Never force piping to make a connection with a pump.

Check	Explanation/comment	Checked
Check that the suction and discharge pipes are supported independently by use of pipe hangers near the pump station.	This eliminates pipe strain on the pump station.	

Check	Explanation/comment	Checked
Check that there is a strong, rigid support for the suction and discharge lines.	As a rule, ordinary wire or band hangers are not adequate to maintain proper alignment.	
Check that the suction or discharge lines are not forced into position.	Component failure will result if suction or discharge lines are forced into position.	
Check that fittings for absorbing expansion are installed in the system when considerable temperature changes are expected.	This helps to avoid strain on the pump.	
Check that eccentric reducers, if used, are installed with the flat side on top.	This eliminates air pockets.	
Check that a three-valve bypass has been installed between the suction and discharge connections.	This is a recommended field option.	
Check that the piping to which optional vibration eliminators are connected is properly anchored to the floor.	This is necessary for maximum effectiveness.	

Fastening



WARNING:

- Only use fasteners of the proper size and material.
- Replace all corroded fasteners.
- Make sure that all fasteners are properly tightened and that there are no missing fasteners.

Commissioning, Startup, Operation, and Shutdown

Preparation for startup



DANGER:

Electrical hazard sufficient to kill. Always disconnect and lock out the power before you service the unit.



WARNING:

- Failure to follow these precautions before you start the unit will lead to serious personal injury and equipment failure.
- Always disconnect and lock out power to the driver before you perform any installation or maintenance tasks. Failure to disconnect and lock out driver power will result in serious physical injury.
- Operating the pump in reverse rotation can result in the contact of metal parts, heat generation, and breach of containment.

Precautions

NOTICE:

- Verify the driver settings before you start any pump.

You must follow these precautions before you start the pump:

- Flush and clean the system thoroughly to remove dirt or debris in the pipe system in order to prevent premature failure at initial startup.
- If temperatures of the pumped fluid will exceed 200°F (93°C), then warm up the pump prior to operation. Circulate a small amount of fluid through the pump until the casing temperature is within 100°F (38°C) of the fluid temperature.

At initial startup, do not adjust the variable-speed drivers or check for speed governor or over-speed trip settings while the variable-speed driver is coupled to the pump. If the settings have not been verified, then uncouple the unit and refer to instructions supplied by the driver manufacturer.

Final installation checks

Installation checklist



CAUTION:

Serious damage to the pump may result if it is started dry. Make sure that the pump is completely filled with liquid before it is started.

Check	Checked
Check that the unit base is properly leveled and secured.	
Check that all lubrication points are properly lubricated.	
Check that the shut-off valves to the suction and discharge lines are open.	
Check that the system is purged of debris and air. This includes the pumps and PRVs.	
Check that the pump and motor shafts are properly aligned.	

Check	Checked
Check that the pump rotation is correct.	

Final piping checklist

Check	Checked
Check that the bypass valve is closed, if used.	
Check that the piping is properly supported. This prevents strain on the unit.	

Electrical wiring and control checklist



WARNING:

- Electrical shock hazard. Conduit grounds are not adequate. You must attach a separate earth (ground) wire to the earth (ground) lug provided in the enclosure in order to avoid potential safety hazards. Failure to follow these instructions can result in serious personal injury, death, or property damage.
- Always disconnect and lock out power to the package and the driver before you perform any installation or maintenance tasks. Failure to disconnect and lock out driver power will result in serious physical injury.

NOTICE:

Electrical connections must be made by certified electricians in compliance with all international, national, state, and local rules.

Check	Checked
Check that the feeder line voltage corresponds to the unit voltage. Check the unit nameplate or motor terminal connection.	
Check that the feeder wires are correctly sized according to local and NEC codes.	

Final adjustments

Make the final adjustments on these adjustable devices in order to match the exact system requirements.

Low-suction pressure switch (optional)



WARNING:

Always disconnect and lock out power to the package and the driver before you perform any installation or maintenance tasks. Failure to disconnect and lock out driver power will result in serious physical injury.

The pressure switch is piped into the suction line. An adjusting dial is located inside of the control. This adjustment controls the low-suction cutout. The differential pressure setting is fixed at 1.5 psi. Therefore cut-in pressure will be the switch setting plus 1.5 psi.

Although the scale is calibrated in psi, it may not correspond exactly to the actual suction gauge indication. Therefore, for critical installations, the setting should be adjusted according to the gauge reading. The approximate settings should be set prior to placing the unit in operation in order to suit the pressure conditions at the installation.

System pressure switches for constant speed units

WARNING:

Always disconnect and lock out power to the package and the driver before you perform any installation or maintenance tasks. Failure to disconnect and lock out driver power will result in serious physical injury.

The simplex unit has one switch and the duplex unit has two switches: one for each pump. Each switch is piped to the discharge piping.

Two adjusting screws are located on the top of the control. Facing the switch, the screw on the right-hand side sets the cutout pressure. Make this adjustment first.

The screw to the left and towards the front sets the cut-in point. Turn this screw until the proper cut-in pressure is obtained.

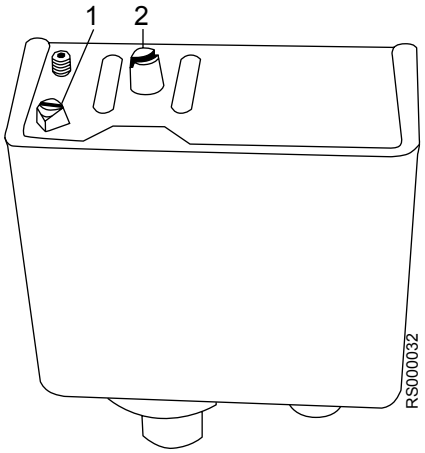

1. The silver adjusting screw on the left front is for cut-in adjustment.
2. The yellow adjusting screw on the right is for cutout adjustment.

Although the scales are calibrated in psi, they may not correspond exactly to the actual discharge gauge indication. Therefore, for critical installations, adjust the settings according to the gauge reading.

For the proper settings of the system pressure switches on a duplex unit, see the wiring diagram for *AquaBoost CS duplex – 575/460/208-230/3/60, 380/3/50 up to 5 hp* (page 22).

Minimum run timer

For a constant speed simplex unit the minimum run timer is set at the factory to 5 minutes. Verify the setting before placing the unit into operation; adjust if a shorter minimum run time is desired.

For the constant speed duplex unit, use the programmable pump sequence control module to set the minimum run timer for each pump.

Programmable pump sequence control module settings

The constant speed duplex package uses a smart relay as its control module.

This table shows the user-adjustable settings of the smart relay. You can manually set parameters using the backlit LCD display and buttons.

Parameter description	Default setting (seconds)	Variable range (seconds)	Field setting
Lead pump minimum run timer	30	0-999	
Lag pump minimum run timer	30	0-999	
Lead pump start delay timer	1	0-99	
Lag pump start delay timer	5	0-99	

Parameter description	Default setting (seconds)	Variable range (seconds)	Field setting
Pump fail to start proof timer	5	0-99	
Low suction/high temperature off proof timer	5	0-99	
Low suction/high temperature on proof timer	5	0-99	
Duty/standby	0	0 = disabled 1 = enabled	
Staging on proof timer	30	0-99	

For more details on these settings see *Sequence of operation for the duplex pumping system* (page 36).

Aquastat

The aquastat for high temperature cutout is set at the factory for 100°F (38°C). Adjust the setting if a different cutout temperature is desired. Do not set the switch above 225°F (107°C).

Optional tank

A variety of different tanks can be used with either the simplex or duplex units. Refer to the specific IOM that was shipped with the tank for installation and operating instructions.

Pump package operation description



CAUTION:

A unit that shows symptoms of possible problems, such as overflow, noise, leaks, vibrations, or continual operation, must be corrected immediately.

Constant speed operation

Constant speed simplex – for capacities up to 110 gpm

Condition	Description
The city water pressure falls below the setting of the system suction pressure switch (2PS).	The pump starts through a power relay.
The system pressure rises above the setting of the system pressure switch.	The pump stops, provided the minimum run timer has expired.

Constant speed duplex – for capacities up to 220 gpm

Condition	Description
The city water pressure falls below the setting of the system suction pressure switch (2PS).	The lead pump starts through a power relay.
The system pressure rises above the setting of the system pressure switch.	The lead pump stops, provided the minimum run timer has expired.
The system demand increases beyond the capacity of the lead pump and the system pressure does not satisfy the pressure switch settings.	The system automatically starts the lag pump and both pumps run.
The system pressure rises above the settings of Pump 1 and Pump 2 discharge pressure switches (2PS and 3PS).	Both pumps stop, provided the minimum run timers have expired.

Condition	Description
The lead pump fails.	The lag pump starts and acts as the lead pump. To reinstate the lead pump do the following: 1. Before fixing the failed pump, turn the HOA switch to the OFF position. 2. After the lead pump has been fixed, place the lead pump HOA into the AUTO position and then press the RESET button to reset the unit. 3. The pump returns to its operational state.

Conditions that cause the unit to cut out

Simplex and duplex units run when there is demand unless one of the following conditions occurs:

Condition	Description	Resolution
Low city pressure	The optional low-suction pressure switch (1PS) trips.	The low suction condition resets automatically when the city pressure returns to an acceptable level.
Pump deadheading	The high temperature cutout switch trips.	The unit resets automatically when there is demand by drawing cooler water through the unit and across the temperature sensor. This cools the sensor and causes it to change state and restart the pump. For a manual purge run the unit in Hand mode for about 5 seconds. Then put the unit back into Auto mode for normal operation.

The smart relay control module

The AquaBoost CS duplex pumping package uses a smart relay for its control module. You can adjust control settings via the front panel of the smart relay.

Smart relay front panel

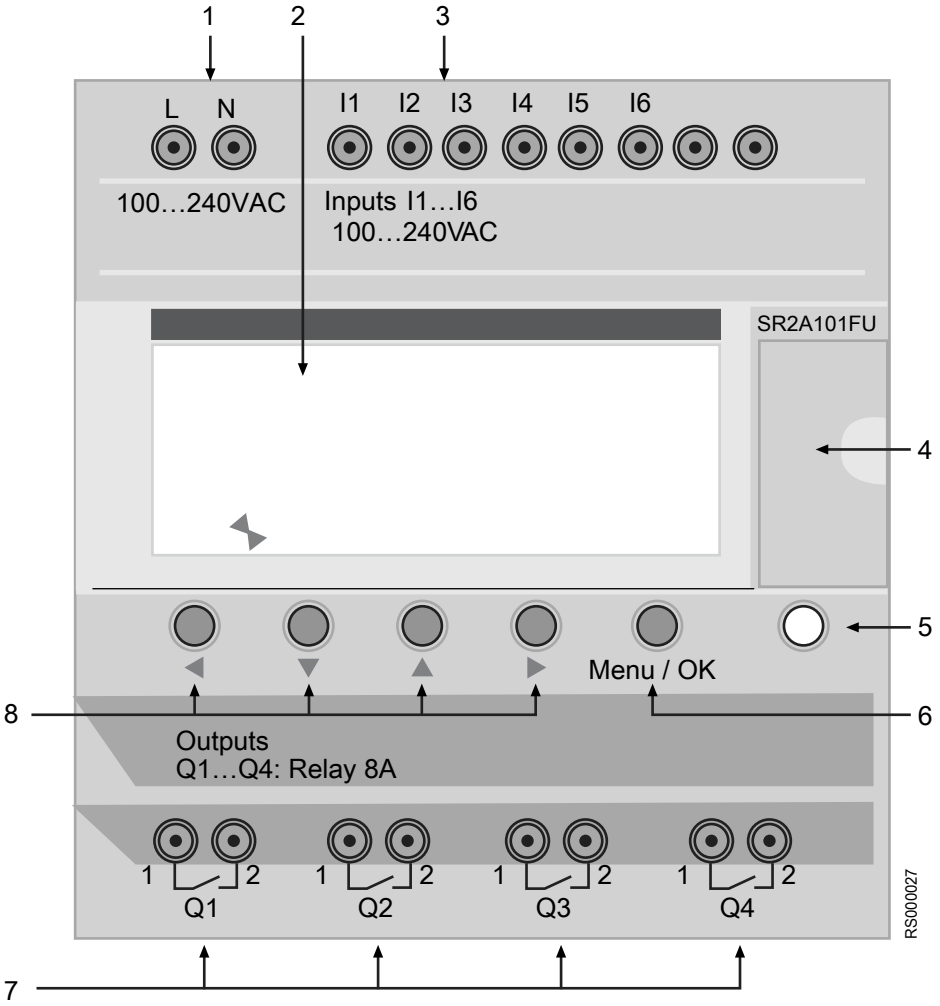

1. Screw terminal block for the power supply
2. LCD display
3. Screw terminal block for discrete inputs
4. Slot for backup memory or PC connection cable
5. Shift key, white
6. Menu/OK key, green, for selection and confirmation
7. Relay output screw terminal block
8. Navigation Z push buttons, gray

LCD display

This illustration show an example of LCD display elements in the input-output screen:

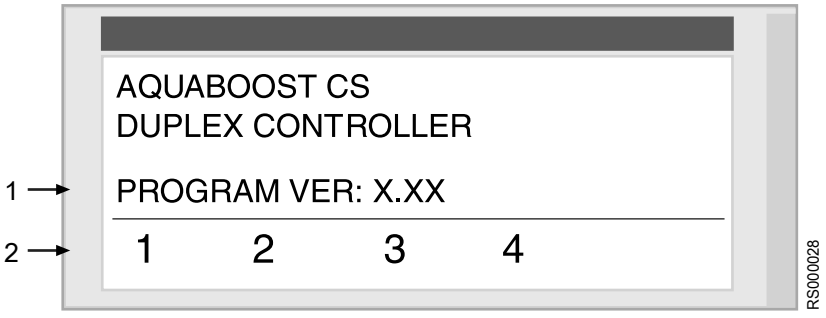

1. Program version
2. Contextual menus, pushbuttons, icons that indicate operating modes

Control keys

The keys located on the front panel of the smart relay are used to configure, program, and control the application and to monitor the progress of the application.

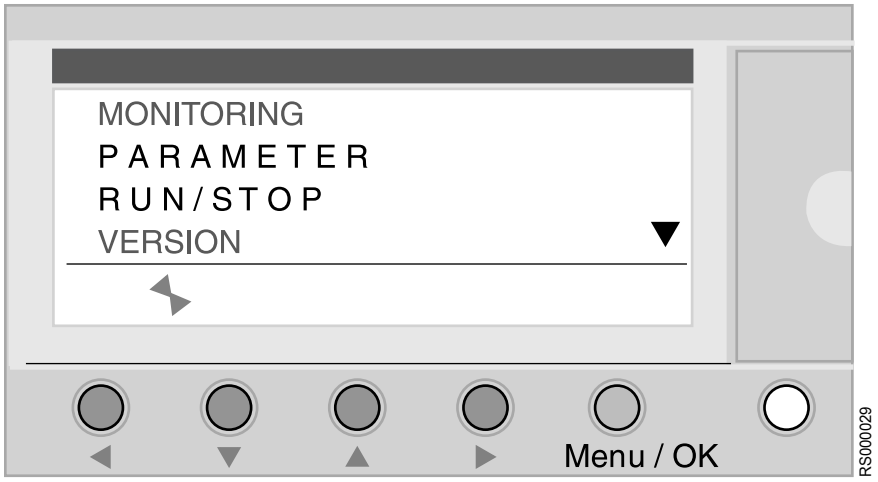

- The shift key is the white key located on the right side of the LCD screen.
- The green Menu/OK key is used for all confirmations: menu, sub-menu, program, parameter.
- The gray keys, labeled Z1 through Z4, have arrows below them indicating the directions of navigation.

Navigate through user-adjustable parameters

When the controller is turned on, the Lead Pump Minimum Run Timer screen appears:

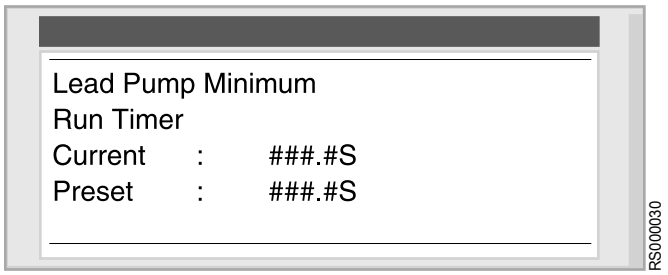

- Press the left-most gray key, Z1, in order to navigate to other user-adjustable parameters.

Modify parameters

1. In order to modify the preset value, press and hold the white shift key and press the right-most navigation key, Z4.

   The current preset value will start to blink.
2. Modify the parameter value with the up and down arrow keys.
3. When the desired value is displayed, confirm the changes by pressing the green Menu/OK button.

Navigate to and from the main screen

- Continuously press the Z1 left arrow key until the main screen appears:

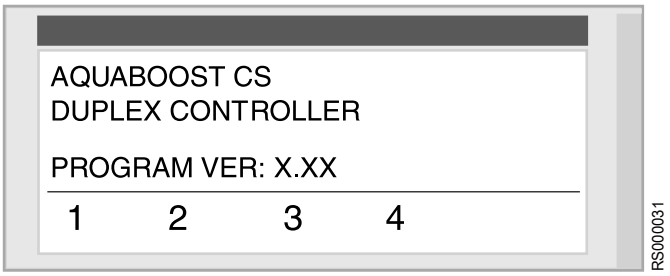

- From the main screen, press the Z1 left arrow key two times to go to the user-adjustable parameters screen.

  The Lead Pump Minimum Run Timer screen will appear.

Sequence of operation for the duplex pumping system

Starting the lead pump

The lead pump can be started from either of the two pressure switches (2PS or 3PS) that are provided on the right-hand side of the controller. The same applies to the lag pump. This provides redundancy in the event of a failure of either pressure switch. Fully automatic alternation is included in the standard controller. Pumps alternate any time that both pumps stop.

Staging pumps together

Pumps can stage together if the pressure switch indicates that the system pressure is unable to meet the required demand. This is the default setting of 0, which means that the duty/standby switch is disabled. The pump stage/de-stage function is disabled when the duty/standby switch is enabled by switching the setting to 1. When the duty/standby switch is enabled, only one pump can run at a time; the other pump remains in standby state.

Maintaining system pressure

If two pumps are running together to maintain the required system pressure, and the system pressure increases, the system de-stages (stops) the lag pump. After the lag pump has been de-staged and system pressure is still maintained, the system then stops the lead pump as well.

The time interval between the lead pump stop and the lag pump stop must be at least 30 seconds. This is a fixed timer and no adjustments can be made.

Start delay

The start delay timer for both lead and lag pumps is a user-adjustable parameter that prevents short cycling of pumps or false starting of pumps. The start delay timer for the lag pump starts after the lead pump starts so that it is impossible for both pumps to be started at the same time.

Minimum run time

Each pump has a minimum run timer. Pumps continue to run during that minimum run time unless a failure occurs, such as pump failure or overload. The pump minimum run timer is a user-adjustable parameter. Pump failure can be detected by a differential pressure switch or by an overload failure. The pump fail proof timer is a user-adjustable parameter.

Pump failure

When one pump is running and the system detects a failure on that pump, the system stops the failed pump. The system then automatically switches to the other pump and replaces the failed pump in order to meet the system demand. When pump failure occurs, the pump failure indicator light illuminates.

Before you fix the failed pump, put the HOA switch in the OFF position. After the failed pump is fixed, put the HOA switch in the Auto position.

You must manually reset the pump. Press the RESET button to turn off the pump failure indicator light and return that pump to operational state.

Low-suction or high-temperature shutdown

A low-suction/high-temperature shutdown proof timer provides instantaneous shutdown and prevents immediate restarting of the pumps. The proof time is adjustable between 0 to 99 seconds; the default setting is 5 seconds.

When a low-suction or high-temperature thermal cutout situation occurs, the red light indicator illuminates. An auto reset feature is provided in order to return the pumps to operational state.

Variable speed operation

Variable speed simplex – for capacities up to 110 gpm

The pressure transducer monitors the system pressure and sends a feedback signal to the controller. Depending upon the feedback, the controller then changes the speed of the pump.

Condition	Description
The system pressure falls below the set point.	The pump starts automatically and pump speed continues to ramp up until the system pressure satisfies the set point.
The system pressure rises above the set point.	The pump automatically reduces speed until the system pressure reaches the set point, provided the minimum run timer has expired.

Variable speed duplex – for capacities up to 220 gpm

The pressure transducer monitors the system pressure and sends feedback signal to the controller. Depending upon the feedback, the controller changes the speed of the pump or stages/de-stages the other pump.

Condition	Description
The system pressure falls below the set point.	The pump starts automatically and pump speed continues to ramp up until the system pressure satisfies the set point.
The system pressure rises above the set point.	The pump automatically reduces speed until the system pressure reaches the set point, provided the minimum run timer has expired.

Low-suction pressure switch

Simplex and duplex units will run when there is demand unless the optional low-suction pressure switch trips due to low city pressure.

The low-suction condition resets automatically when city pressure returns to an acceptable level.

Temperature relief valve

The variable-speed units have a temperature relief valve that senses water temperature inside the pump.

The valve opens and closes depending on the water temperature. This modulating action maintains a relatively constant fluid temperature even as operating conditions vary.

Condition	Description
The water temperature exceeds the valve opening temperature, typically 120°F (49°C).	The valve automatically opens to allow relatively cooler supply water to refill the pump as the hot water is discharged to the drain or low pressure return.
The water temperature falls below the opening temperature by 10° F (5.5°C).	The valve automatically closes in order to conserve water and reduce waste.

Maintenance

Precautions



DANGER:

Electrical hazard sufficient to kill. Always disconnect and lock out the power before you service the unit.



WARNING:

- This manual clearly identifies accepted methods for disassembling units. These methods must be adhered to. Trapped liquid can rapidly expand and result in a violent explosion and injury. Never apply heat to impellers, propellers, or their retaining devices to aid in their removal.
- Make sure that each pump and the package are isolated from the system and that pressure is relieved before you disassemble the pump, remove plugs, open vent or drain valves, or disconnect the package piping.
- Always disconnect and lock out power to the package and the driver before you perform any installation or maintenance tasks. Failure to disconnect and lock out driver power will result in serious physical injury.
- Crush hazard. The unit and the components can be heavy. Use proper lifting methods and wear steel-toed shoes at all times.

Monthly maintenance

Motor lubrication checks

- For grease-filled bearings, make sure that grease is not all over the inside of the motor and in the bottom of the motor. This could be a sign of overfilling. Refer to the lubrication instructions from the motor manufacturer.

Close-coupled pumps

- For a horizontal pump, verify that the mechanical seal is not leaking between the pump and the motor.

Sound and visual checks of the whole station

- Listen for any odd sounds that rub or grind, electrical arcing, and check for anything that is binding or unusual. These conditions can indicate a serious problem.

  Note that there is going to be some harmonic vibration with the pumps and motor. Listen for excessive vibration or noise as this requires immediate service. Do not operate the pump if there is excessive vibration.
- Confirm that the building cooling and ventilation systems are operating and clear of all obstructions. The maximum operating range for equipment is 104°F (40°C).
- Verify that water, grease, oil, and hardware are not leaking or loose on the pump station.

Station skid

- Visually inspect for leaks in the station piping, valves, and other components.
- Visually inspect the piping and skid for any stress cracks in the welds.
- Visually inspect the station for loose or damaged paint or areas of rust.

Troubleshooting

Pump station troubleshooting

DANGER:

- Personal injury hazard. Troubleshooting a live control panel exposes personnel to hazardous voltages. Electrical troubleshooting must be done by a qualified electrician. Failure to follow these instructions will result in serious personal injury, death, and/or property damage.
- Electrical hazard sufficient to kill. Always disconnect and lock out the power before you service the unit.

WARNING:

Electrical connections must be made by certified electricians in compliance with all international, national, state, and local rules.

Note that some troubleshooting procedures apply to only constant speed systems or only variable speed systems.

The pump station does not power up

Cause	Remedy
The site voltage does not match the pump station voltage.	Make sure that the site voltage matches the pump station design voltage.
Line-to-line voltage is not balanced.	Check incoming voltage and amperage. Line-to-line voltage should be balanced. Line-to-ground voltage should also be balanced.
The power fuses are blown or breakers are tripped.	Check power fuses and breakers. Breakers are shipped in the OFF position. Replace blown fuses.
The pump station is not properly grounded (earthed).	Check that proper grounding (earthing) techniques have been used for the pump station.
There is a fault.	Check for fault codes or fault lights on the PLC. Correct the fault.

The station powers up, but the pumps do not run

Cause	Remedy
Pumps are not enabled.	Check the PLC to make sure that the pumps are enabled. Check for faults. Correct any faults.
The desired pressure is satisfied.	Check to see if the desired pressure is satisfied. If the actual pressure is greater than the set point pressure, then the pumps are automatically stopped.
There is a fault.	Check for fault codes or fault lights on the PLC. Correct the fault.
The motor is tripped.	Check for a tripped motor thermal protector. Allow motor to cool, and then reset the thermal protector.
The fuses are blown or breakers are tripped.	Check circuit breaker and fuses.
Transducer isolation valves are closed.	Make sure that the transducer isolation valves are in the open position.
Automatic mode is faulty.	Check to see if the pump can be run in Manual mode on the PLC.

Cause	Remedy
The impeller is bound.	Check to see if you can turn the pump by hand. Check for a bound impeller.
A pressure transducer is faulty.	Replace faulty pressure transducers.
Motor wiring is loose.	Make sure that motor wiring is securely connected.
Motor windings have lost insulation strength.	Test the motor leads with a megger in order to check the motor windings.
Variable speed drive is wired incorrectly.	Check corresponding variable speed drive. Make sure drive is wired correctly.
Motor is defective.	Repair or replace motor.

Troubleshoot the pump operation

If the pump still does not operate after you have checked initial causes, then use this procedure to further investigate and correct the problem.

1. Momentarily turn the HOA switch to the HAND position and then back to OFF. Does the starter pull in?
   - If the starter does not pull in, then go to the next step.
   - If the starter does pull in, then go to the last step.
2. Turn the HOA switch to the HAND position. Check the voltage across the terminals for the coil in the starter.
   - If voltage is present and the starter is not pulled in, the coil is defective and must be replaced.
   - If no voltage is present, then go to the next step.
3. With the HOA still in the HAND position, check the voltage between the hot side of the starter coil and the neutral (white) wire. 120 volts should be measured.
   - If no voltage is measured, then check incoming power and fuses.
   - If voltage is measured, then go to the next step.
4. With the HOA still in the HAND position, check the voltage between the hot side of the coil and the neutral (white) wire for overload block. 120 volts should be measured.
   - If voltage is measured, then replace the GV2P block.
   - If no voltage is present, then contact your local Goulds Pumps representative to service the control circuit.
5. With the starter pulled in, check the voltage at the bottom of the GV2P block. The voltage should be the same as the incoming power.
   - If no voltage is present, then replace the starter.
   - If voltage is present, then contact an electrician to check the leads and motor.

For electrical troubleshooting of variable speed units, refer to the manuals of the corresponding variable speed controllers.

The pumps run but do not build desired pressure

Cause	Remedy
Pumps are running off their design curve.	Check the application. Is the system running in an open discharge condition (excessive flow rate)? For example, is the system filling a large irrigation line for the first time of the season?
Pumps are running at less than full speed.	Check to see if the pumps are running at full speed. If they are running less than full speed, they could be experiencing electrical issues. Check the panel for power status.
The inlet pressure does not match the project specifications.	Check to see if the inlet pressure matches the project specifications. Variations in inlet pressure can have detrimental effects on performance.
A pipe is broken.	Check for broken pipes.

Cause	Remedy
The transducer isolation valves are closed.	Check to be sure that the transducer isolation valves are in the open position.
The NPSH is insufficient.	Check the NPSH. Are proper flooded conditions or positive pressure being delivered to the pump station? Check for air in the supply lines. Check for properly filled supply tanks (if applicable). Excessive suction lift or piping losses will limit the life expectancy of the pumps.
The pump station has lost its prime.	Check to be sure that the pump station has been primed properly. Make sure that all pumps and components are properly filled with water.
The pump rotation is incorrect.	Check the pump rotation. Proper rotation is indicated on the pump volute. (See the pump IOM.)
A suction or discharge valve is closed or clogged.	Check the isolation valves and check valves. Are all suction/discharge valves open? Could any valves be plugged? Could the pumps be plugged?
The motor is not operating at the rated RPM.	Check the voltage and amperage. Check for possible phase loss to the motor.
The impeller is worn or plugged.	Take the pump to an authorized pump repair facility.
The pump bearings are worn.	Take the pump to an authorized pump repair facility.

The pump station experiences excessive vibration

Cause	Remedy
The motor, pump, or piping is loose.	Make sure that all fasteners and components are properly tightened.
Pump station vibration dampers are missing or improperly installed.	Check for properly installed pump station vibration dampers.
Pumps are running off their design curve.	Check the application. Is the system running in an open discharge condition (excessive flow rate)? For example, is the system filling a large irrigation line for the first time of the season?
Air or gases are present in the pumped liquid.	Check water supply lines and tanks. Check for air or gases in liquid. Bleed the lines.
Discharge piping is plugged.	Check discharge piping/valves. Could the piping be plugged? Could the pump be plugged? Are the isolation valves open? Clear any clogs.
Supply piping has excessive suction/lift conditions or friction loss.	Check for excessive suction/lift conditions or friction loss on supply piping.
The impeller is bound or worn.	Take the pump to an authorized pump repair facility.
Pumps and pipes are not properly aligned.	Correct the alignment between pumps and pipes.

The pump station does not shut down and no water is used

Cause	Remedy
The pump station is in Hand or Manual mode.	Put the system in the AUTO position.
The system pressure is set beyond capability of the station.	Check the system set pressure. Is this duty point beyond the capability of the pump station?
The RTDs are incorrectly installed.	Check to make sure that the RTDs are installed correctly. (CS only)
There are leaks or broken pipes.	Check for broken pipes or leaks. Does the system pressure decrease if the pump station is turned off?

Cause	Remedy
The diaphragm tank is faulty.	Check for a properly installed diaphragm tank. Has the tank failed? Has the tank been charged to the proper operating pressure before installation? (~10 psi below the desired set point)
The pressure transducers are faulty.	Check the pressure transducers. Does the actual mechanical gauge pressure match the pressure displayed on the VFDs and the PLC?
The VFDs are in Local mode.	Put the VFDs in Remote mode.
A check valve is malfunctioning.	Check for malfunctioning check valves. Does the system hold pressure when the pump package is shut down? Replace faulty valves.

The pump station cycles or hunts erratically

Cause	Remedy
The pumps are oversized for the current demand.	Check the application. Possibly increase the size of the bladder tank for low demand situations.
The inlet pressure is fluctuating.	–
There are leaks or broken pipes.	Check for broken pipes or leaks. Does the system pressure decrease when the pump station is turned off?
The diaphragm tank is faulty.	Check for a properly installed diaphragm tank. Has the tank failed? Has the tank been charged to the proper operating pressure before installation? (~10 psi below the desired set point)
The pressure transducers are faulty.	Check the pressure transducers. Does the actual mechanical gauge pressure match the pressure displayed on the VFDs and the PLC?
A check valve is malfunctioning.	Check for malfunctioning check valves. Replace faulty valves.
There is an error in the PLC programming.	Check the customer programming on the PLC. Correct any errors.

Other Relevant Documentation or Manuals

Manuals for AquaBoost components

Further information pertaining to the installation, operation, and maintenance of your AquaBoost Pumping System can be found in the IOMs provided for the associated equipment:

Equipment	Manual
Goulds Pumps Model NPE	IM013
Aquavar CPC	IM167
Aquaboost II 3AB2-5AB2	IM183
Aquaboost II 115AB2-2AB2	IM156
Tank	Model-specific

Xylem |'zīləm|

1) The tissue in plants that brings water upward from the roots
2) A leading global water technology company

We're 12,500 people unified in a common purpose: creating innovative solutions to meet our world's water needs. Developing new technologies that will improve the way water is used, conserved, and re-used in the future is central to our work. We move, treat, analyze, and return water to the environment, and we help people use water efficiently, in their homes, buildings, factories and farms. In more than 150 countries, we have strong, long-standing relationships with customers who know us for our powerful combination of leading product brands and applications expertise, backed by a legacy of innovation.

For more information on how Xylem can help you, go to xyleminc.com

xylem
Let's Solve Water

Xylem Inc.
2881 East Bayard St. Ext., Suite A
Seneca Falls, NY 13148
Tel. 1-800-453-6777
Fax 1-888-322-5877
www.xyleminc.com/brands/
gouldswatertechnology

Visit our Web site for the latest version of this document and more information

The original instruction is in English. All non-English instructions are translations of the original instruction.

© 2012 Xylem Inc.

Goulds is a registered trademark of Goulds Pumps, Inc. and is used under license.

S100057_1.0_en.US_2012-7_IOM_AquaBoost

INSTALLATION & OPERATION MANUAL

HARMSCO® HURRICANE® FILTERS

HARMSCO® Hurricane® Filters provide exceptionally long filter runs, reduced maintenance and lower filtration costs when used as combination centrifugal separator and cartridge filter or in conventional filtration applications.

HOW THEY WORK

Centrifugal Separation to Remove Dense Particles from Liquids

Liquid enters the Hurricane filter's outer chamber tangentially, producing a rotational flow. This flow pattern creates a centrifugal force which is used to separate dense particles such as sand, rust, grit and metal fines from liquids. Heavy particles drop to the bottom of the filter's outer chamber where they are discharged manually, automatically or continuously. With the dense particles removed, liquid and light solids rise up, over and into an inner chamber where the rotational flow is continued.



Up-flow Cartridge Filtration and Angled Pleats for Lightweight Particle Removal

Trapped air is automatically purged due to principal of up-flow filtration. Filtered liquid exits the filter at the highest point, as it is filtered. A secure top plate prevents cross contamination of filtered and unfiltered liquid. This patented up-flow design allows Harmsco to utilize 100% of cartridge surface area, providing efficient filtration. Filter efficiencies are dramatically improved to provide longer filter runs and reduced filtration costs. Harmsco® Hurricane® filter cartridges for the Waterbetter® filters are available in a wide range of micron ratings and may be cleaned and re-used in most applications and most micron ratings.

Models & Specifications

Three Hurricane® Filter models are available for a wide range of applications. Models and specifications are as follows:

SPECIFICATION	HUR 40 HP	HUR 90 HP	HUR 170 HP
Flow rate (GPM)	Up to 50	Up to 100	Up to 150
Filter area (pleated)	40 sq. ft.	90 sq. ft.	170 sq. ft.
Pipe sizes, inlet & outlet	2" NPT	2" NPT	2" NPT
Pipe size, drain	1" NPT	1" NPT	1" NPT
Filter height	21"	31"	41"
Filter diameter	13"	13"	13"
Floor space required	15"x15"	15"x15"	15"x15"
Service height clearance	31"	51"	72"
Shipping weight (approx.)	40 lbs.	51 lbs.	64 lbs.
Temperature rating*	140° (60°C)	140° (60°C)	140° (60°C)

**Varies based on pressure and time under load.*

Features

Product features include:

- 304 stainless steel filter housings
- Electro-polished for superior finish
- Resistant coatings available
- Fail-safe lids with individual studs for security
- Brass wing-nuts for convenience
- 90˚ elbow and 45˚ sweep on outlet for in-line vertical installation
- CPVC standpipe for up-flow design
- Choice of cartridges available



HUR 40 HP



HUR 90 HP



HUR 170 HP

Temperature & Pressure Ratings

Hurricane® Filters are rated for pressures to 150 psi and temperatures to 140°F.

Sizing

Use the chart shown below to size Hurricane® Filters for your application:

Flow Rate	Recommended Model	Pleated Filter Area
Up to 50 GPM	HUR 40 HP	40 sq. ft.
Up to 100 GPM	HUR 90 HP	90 sq. ft.
Up to 150 GPM	HUR 170 HP	170 sq. ft.
Up to 300 GPM	HUR 170 HP (two filters*)	340 sq. ft. (two filters*)
Up to 450 GPM	HUR 170 HP (three filters*)	510 sq. ft. (three filters*)
Up to 600 GPM	HUR 170 HP (four filters*)	680 sq. ft. (four filters*)
Up to 750 GPM	HUR 170 HP (five filters*)	850 sq. ft. (five filters*)

**Parallel installation with valves to isolate filters for service while other filters are operational.*

Pressure Drop

The total head loss data shown below was developed by NSF International and indicates pressure drop with Hurricane® Filter and one micron filter cartridge in clean water.

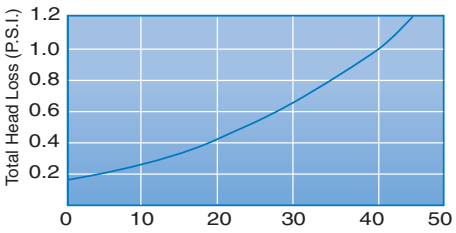

Pressure drop HUR 40 HP

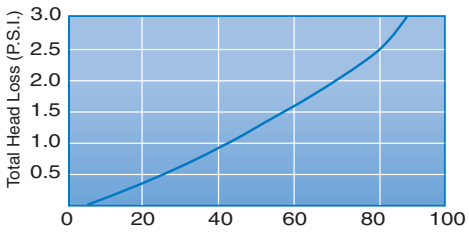

Pressure drop HUR 90 HP

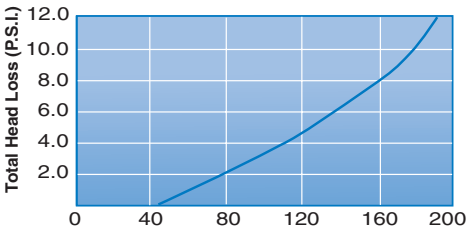

Pressure drop HUR 170 HP

Harmsco® Hurricane® Replacement Cartridges

Hurricane® replacement cartridges are available in a wide range of nominal ratings, shown right.

Cartridges are rated for temperatures to 140˚F and may be used to separate solids in liquids with a pH of 3 to 11.

Packaged one cartridge per carton.



Filter Model	Cartridge Product Code	Nominal Micron	Cartridge Dimensions			Ship Wt./Ctn. (One Cartridge)
HUR 40 HP	HC/40-0.35	0.35	9 5/8”	7 3/4”	3” FPT	4 lbs.
	HC/40-1	1	9 5/8”	7 3/4”	3” FPT	4 lbs.
	HC/40-5	5	9 5/8”	7 3/4”	3” FPT	4 lbs.
	HC/40-10	10	9 5/8”	7 3/4”	3” FPT	4 lbs.
	HC/40-20	20	9 5/8”	7 3/4”	3” FPT	4 lbs.
	HC/40-50	50	9 5/8”	7 3/4”	3” FPT	4 lbs.
	HC/40-100	100	9 5/8”	7 3/4”	3” FPT	4 lbs.
	HC/40-150	150	9 5/8”	7 3/4”	3” FPT	4 lbs.
	HC/40-EZ-CLEAN	NR*	9 5/8”	7 3/4”	3” FPT	4 lbs.
HUR 90 HP	HC/90-0.35	0.35	19 1/2”	7 3/4”	3” FPT	7 lbs.
	HC/90-1	1	19 1/2”	7 3/4”	3” FPT	7 lbs.
	HC/90-5	5	19 1/2”	7 3/4”	3” FPT	7 lbs.
	HC/90-10	10	19 1/2”	7 3/4”	3” FPT	7 lbs.
	HC/90-20	20	19 1/2”	7 3/4”	3” FPT	7 lbs.
	HC/90-50	50	19 1/2”	7 3/4”	3” FPT	7 lbs.
	HC/90-100	100	19 1/2”	7 3/4”	3” FPT	7 lbs.
	HC/90-150	150	19 1/2”	7 3/4”	3” FPT	7 lbs.
	HC/90-EZ-CLEAN	NR*	19 1/2”	7 3/4”	3” FPT	7 lbs.
HUR 170 HP	HC/170-0.35	0.35	30 3/4”	7 3/4”	3” FPT	10 lbs.
	HC/170-1	1	30 3/4”	7 3/4”	3” FPT	10 lbs.
	HC/170-5	5	30 3/4”	7 3/4”	3” FPT	10 lbs.
	HC/170-10	10	30 3/4”	7 3/4”	3” FPT	10 lbs.
	HC/170-20	20	30 3/4”	7 3/4”	3” FPT	10 lbs.
	HC/170-50	50	30 3/4”	7 3/4”	3” FPT	10 lbs.
	HC/170-100	100	30 3/4”	7 3/4”	3” FPT	10 lbs.
	HC/170-150	150	30 3/4”	7 3/4”	3” FPT	10 lbs.
	HC/170-EZ-CLEAN	NR*	30 3/4”	30 3/4”	3” FPT	10 lbs.

Activated carbon and Poly-Pleat Hurricane® cartridges available. Please see catalog. ** NR - not rated*

Cartridge Cleaning Instructions

Hurricane® cartridges are made of Polyester Plus™, a proprietary blend of polyester fibers which can be cleaned in most applications and micron ratings to make Hurricane® filter elements reusable! For best results, follow the directions described below:

When Cartridge Cleaning is Possible

Clean cartridge when pressure differential is 12 psi above startup differential.

Non-cleanable Applications

Replace cartridge when pressure differential is 30 psi above start-up differential or when flow has diminished to an unacceptable level, indicating cartridge is at capacity.

Cartridge Removal

To remove filter cartridge, drain filter housing. Remove wing-nuts and lid. Hold cross-bar in retainer nut and pull upward to remove filter cartridge and top plate from filter housing. Follow cleaning instructions described herein.

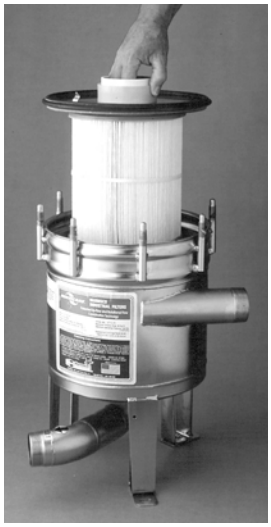

Lid Replacement

Replace wing-nuts systematically, rotating around filter. "Finger tight" is normally sufficient. However, in extreme duty applications it may be necessary to tighten to 75 inch lbs. of torque. Overtightening can cause damage to the rim gasket.

Cartridge Cleaning in Aqueous Applications

For best results, clean cartridges with pressure nozzle using standard hose. Direct spray at an angle to remove particulate (see photo). Follow these directions to remove oils, organic matter, algae and mineral deposits.



OILS: Soak cartridge in a solution of tri-sodium phosphate or similar strong detergent (2 lbs. to 10 gallons of water). Soak up to 12 hours for best results. Rinse after bath.

Caution: Do not rinse cartridges with acid until oils and organic matter are removed. Use detergent first and follow with acid bath for mineral removal. Flush cartridges with water after muriatic or tri-sodium phosphate baths.

ORGANIC MATTER, ALGAE: Use tri-sodium phosphate solution as described above, plus 1 pint of liquid chlorine to kill organic matter and algae. Soak cartridge one hour or longer until surface is no longer "slippery." Rinse after bath.

CALCIUM MINERAL DEPOSITS: Follow directions for "oils" described above. Soak cartridge for approximately ten minutes in a solution of one part of muriatic acid to twenty parts of water. Rinse cartridge thoroughly with water.

When Cartridge Cleaning is Not Possible

Generally, it is not possible to clean Hurricane® filter cartridges when filtering petroleum-base liquids, toxic substances, and one and below micron applications.

Note: Pressure gauges are recommended to indicate when cartridge cleaning or replacement is necessary.

Model	A Height	B Width	C Diameter	D Inlet	E Outlet
HUR 40 HP	19 1/2"	14 5/8"	13"	12 3/4"	3 7/16"
HUR 90 HP	29 7/8"	14 5/8"	13"	17 3/4"	3 7/16"
HUR 170 HP	40 1/2"	14 5/8"	13"	23 5/8"	3 7/16"

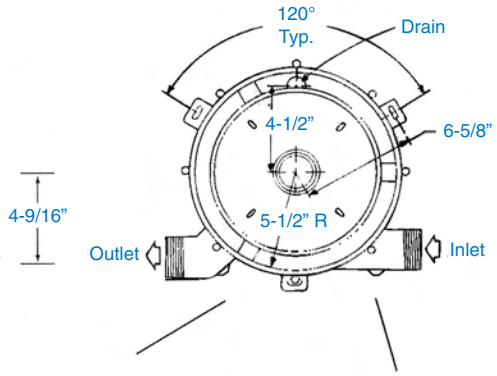

Pressure Gauges
Install optional pressure gauges in gauge ports as shown above. Use pressure differential to indicate when to clean or replace cartridge.

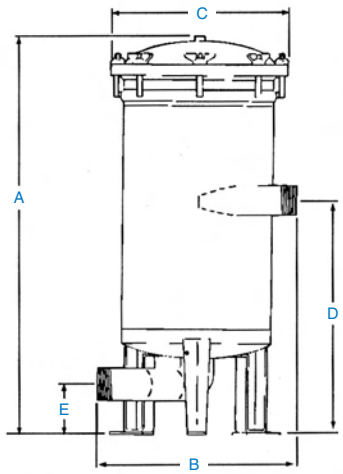

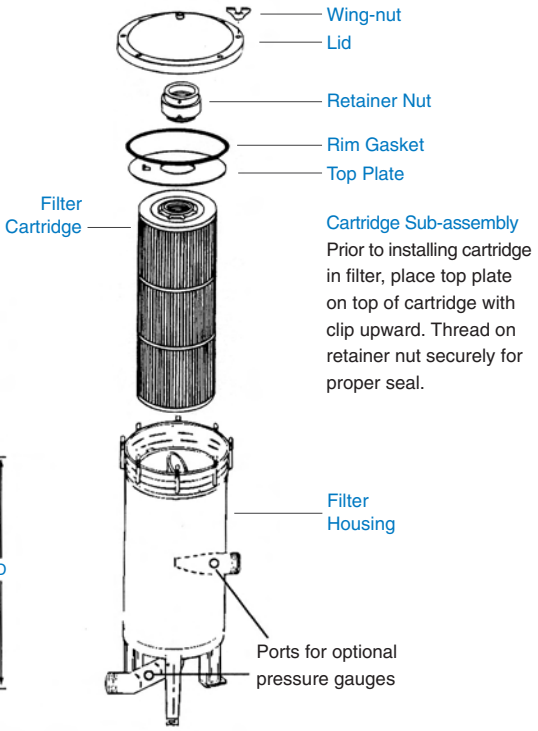

Cartridge Sub-assembly
Prior to installing cartridge in filter, place top plate on top of cartridge with clip upward. Thread on retainer nut securely for proper seal.

Installation

Install filter using 2” couplers for inlet and outlet with 1” coupler for drain pipe. Shut-off valves should be installed on inlet, outlet and on drain pipe to be able to service the filter and isolate it when necessary.
Pressure gauges are also recommended before and after the filter to easily calculate the pressure differential and to know when cartridge should be cleaned or replaced. Threaded flanged fittings for inlet and outlet are available by special order.

1/4” FPT Lid Fitting

One-quarter inch FPT fittings are installed in Waterbetter® Filter lids for a number of customer supplied options, including petcock for pressure relief, pressure gauge, sensor, thermocouple, etc. This fitting should be plugged at time of installation if one of these options is not installed.



Harmsco, Inc. Industrial Filters Limited Warranty

1. Harmsco, Inc. warrants its line of Industrial Filters to be free of defects in material and workmanship for a period of one year from the date of installation.
2. The warranty for Industrial Filters ordered with special coatings is limited only to the recoating of the defective parts due to failure in materials or workmanship for one year from date of installation.
3. This warranty does not cover any equipment purchased for use in applications in which the product is not suited. It is the responsibility of the buyer to determine if a product is suitable for a particular application.
4. THIS WARRANTY EXCLUDES THE FOLLOWING:
   a. Any fresh water unit installed for salt water use.
   b. Damage caused by improper installation, operation or care.
   c. Chemical attack.
   d. Rubber type parts and normal wear items, i.e. “o” rings, rim gaskets, wing nuts, pipe caps, holding rods.
   e. Any costs of labor or expenses incurred in the removal and/or installation of Unit, or any surrounding device.
   f. Damage caused by galvanic or electrolytic attack.
   g. Altering or removing the Harmsco, Inc. information label.
   h. Any unit not grounded.
5. Service under this warranty is to be provided by the dealer/distributor who sold the unit to the distributor. If the dealer/distributor is unable to provide warranty service, contact:

Harmsco, Inc. P.O. Box 14066
North Palm Beach, Florida 33408, U.S.A.
Phone (561) 848-9628 • Fax (561) 845-2474

A Returned Goods Authorization (RGA) number must be received from the above office and placed on all shipments to and correspondence with Harmsco, Inc. Please be prepared with the following information:

1. Model number and serial number
2. Date of installation
3. Name of installer
4. Nature of problem
5. Your address and telephone number.

Particle Separation

Particle separation with Hurricane® filters is influenced by particle weight and flow rate. For optimum separation, the drain valve should be opened routinely by hand or automatically using a timer actuated valve. Automatic purge valves are not available from Harmsco. However, for more information regarding this equipment, please contact the Authorized Harmsco Distributor in your area.

The data shown below was developed through tests conducted with Hurricane® filters and twenty micron filter cartridges to determine optimum flow rates for particle separation. Sand was used as the test’s particulate with a specific gravity of 2.6 relative to water at 1.0. This data is provided for general sizing purposes only. Results vary and depend on the particulate being filtered, viscosity and other variables.

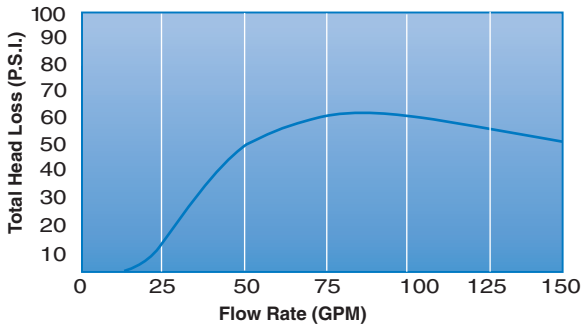

Tests indicate the separation of performance of all three Hurricane® filters were essentially the same up to the rated flow rate of each model.

Part List

Hurricane® Filter parts and components are listed below:

Part No.	Material	Description
550-E	EPDM	Rim gasket to seal filter
905-P	PVC	Retainer nut for filter cartridge
309SS	Stainless steel	Top plate
312	PVC	Retainer nut insert
530-AC	Stainless steel	Lid with vent
316-C	CPVC	Standpipe for HUR 40 HP
317-C	CPVC	Standpipe for HUR 90 HP
315-C	CPVC	Standpipe for HUR 170 HP
202-B	Brass	Wing-nut
329	CPVC	Inner vessel isolator
330	Stainless steel	Screw 1/4” x 1/2” for isolator
Options:		
550-B	Buna-N	Rim gasket to seal filter
550-V	Viton	Rim gasket to seal filter
327	Stainless steel	2” Flange fittings (set of 2)

Available From:

HARMSCO® Filtration Products
P.O. Box 14066 • North Palm Beach, FL 33408
800.327.3248 • 561.848.9628 • Fax: 561.845.2474 • E-mail: sales@harmsco.com
www.harmsco.com

MADE IN U.S.A.

003 4/07

GARDNER DENVER®

13-20-600
Version: 00
April 12, 2007

INTEGRA™
BASE-MOUNTED
COMPRESSORS

AIRSMART CONTROL

MODELS – EFC99J

20, 25 & 30 HP

60 HZ

OPERATING AND SERVICE MANUAL

GARDNER DENVER

MAINTAIN COMPRESSOR RELIABILITY AND PERFORMANCE WITH GENUINE GARDNER DENVER® COMPRESSOR PARTS AND SUPPORT SERVICES

Gardner Denver® Compressor genuine parts, manufactured to design tolerances, are developed for optimum dependability – specifically for Gardner Denver compressor systems. Design and material innovations are the result of years of experience with hundreds of different compressor applications. Reliability in materials and quality assurance is incorporated in our genuine replacement parts.

Your authorized Gardner Denver Compressor distributor offers all the backup you'll need. An AirSmart™ network of authorized distributors provides the finest product support in the air compressor industry.

Your authorized distributor can support your Gardner Denver air compressor with these services:

1. Trained parts specialists to assist you in selecting the correct replacement parts.
2. Factory warranted new and remanufactured rotary screw airends. Most popular model remanufactured airends are maintained in stock at the Remanufacturing Center in Indianapolis, IN., for purchase on an exchange basis with liberal core credit available for the replacement unit.
3. A full line of factory tested AEON™ compressor lubricants specifically formulated for use in Gardner Denver compressors.
4. Repair and maintenance kits designed with the necessary parts to simplify servicing your compressor.

Authorized distributor service technicians are factory trained and skilled in compressor maintenance and repair. They are ready to respond and assist you by providing fast, expert maintenance and repair services.

For the location of your local authorized Gardner Denver Air Compressor distributor, refer to the yellow pages of your phone directory, check the Gardner Denver Web Site at www.gardnerdenver.com or contact:

Gardner Denver
1800 Gardner Expressway
Quincy, IL 62305

Phone: (217) 222-5400

Fax: (217) 224-7814

INSTRUCTIONS FOR ORDERING REPAIR PARTS

When ordering parts, specify Compressor MODEL, Method of Cooling, HORSEPOWER and SERIAL NUMBER (see nameplate on unit). The Airend Serial Number is also stamped on top of the discharge bearing carrier casting.

All orders for Parts should be placed with the nearest authorized distributor.

Where NOT specified, quantity of parts required per compressor or unit is one (1); where more than one is required per unit, quantity is indicated in parenthesis. SPECIFY EXACTLY THE NUMBER OF PARTS REQUIRED.

DO NOT ORDER BY SETS OR GROUPS.

To determine the Right-Hand and Left-Hand side of a compressor, stand at the motor end and look toward the compressor. Right-Hand and Left- Hand are indicated in parenthesis following the part name, i.e. (RH) and (LH), when appropriate.

FOREWORD

Gardner Denver Rotary Screw compressors are the result of advanced engineering and skilled manufacturing. To be assured of receiving maximum service from this machine the owner must exercise care in its operation and maintenance. This book is written to give the operator and maintenance department essential information for day-to-day operation, maintenance and adjustment. Careful adherence to these instructions will result in economical operation and minimum downtime.

DANGER

Danger is used to indicate the presence of a hazard which will cause severe personal injury, death, or substantial property damage if the warning is ignored.

WARNING

Warning is used to indicate the presence of a hazard which can cause severe personal injury, death, or substantial property damage if the warning is ignored.

CAUTION

Caution is used to indicate the presence of a hazard which will or can cause minor personal injury or property damage if the warning is ignored.

NOTICE

Notice is used to notify people of installation, operation or maintenance information which is important but not hazard-related.

This book covers the following models:

HP	PSI	Air Cooled	Parts List	Controller Manual
20, 25 & 30	100, 125, 150, 175	EFC99J	13-20-500	13-17-600

TABLE OF CONTENTS

Maintain Compressor Reliability And Performance With Genuine
Gardner Denver Compressor Parts And Support Services 1
Instructions For Ordering Repair Parts 1
Foreword 2
Index 4
List Of Illustrations 6
Section 1, General Information 7
Section 2, Installation 13
Section 3, Starting & Operating Procedures 20
Section 4, Controls & Instrumentation 25
Section 5, Lubrication, Oil Cooler, Oil Filter & Separator 44
Section 6, Air Filter 55
Section 7, Belt Drive 57
Section 8, Maintenance Schedule 60
Section 9, Troubleshooting 62

INDEX

Air Cooled Unit 13
Air Filter
  Element 55
  Element Life 56
  Section 6 55
  Standard Duty 55
Air Flow In Compressor System 7
Air Receiver
  Auxiliary 16
Air/Oil Separators 52

Belt Drive
  Checking Belt Tension 58
  Replacing Belts 57
  Replacing Compressor Sheave 58
  Section 7 57

Cold Ambient Operation 45
Cold Weather
  Installation 16
Compression Principle 7
Compressor 7
Controls & Instrumentation
  Airsmart Operation 25
  Control Devices 26
  General Description 25
  Section 4 25
Cooler
  Compressor Oil 52
Cooling, Sealing And Lubrication 7

Daily Check 22
Decals 11, 12
Discharge Service Line 17

Electrical Wiring 17
Enclosure 15

Foundation 14

General Information
  Section 1 7
Grounding 18

High Temperature Operation 45

Inlet Line 16
Installation
  Cold Weather 16
  General 13
  Section 2 13

Lifting Unit 13
Location 13
Lubricant
  Recommended 44
  Upgrade Procedure 48
Lubrication
  Motor 18
Lubrication, Cooling And Sealing 7
Lubrication, Oil Cooler, Oil Filter & Separator
  Section 5 44

Maintenance Schedule
  Section 8 60
Moisture Separator/Trap
  Optional 16
Motor Lubrication 18

Oil Cooler
  Compressor 52
Oil Filter 50
Oil Level
  Gauge 50
  Procedure For Checking 45
Oil Reservoir 52
  Drain 14
  Filling 47
Oil Separator
  Inspection 53
  Removal For Inspection Or Replacement 53
Oil Specifications 44
Oil System
  Addition Of Oil Between Changes 45
  Compressor 44
  Draining And Cleaning 47
  Moisture 50
  Oil Change Interval 46
Oil System Check 54
  Air And Oil Discharge Temperature 54
  Compressor Oil Inlet Temperature 54
  Oil Cooler Oil Pressure Differential 54
  Oil Cooler Temperature Differential 54
  Oil Inlet Pressure 54

Piping
  Control 16
Pressure Differential Gauging 52
Prestart-Up Instructions 20
  Air Filter 20
  Compressor Oil 20
  Electrical 20
  Enclosure 21
  Grounding 20
  Operating Mode 21
  Piping 20
  Rotation 20
  System Pressure 21

Quick Start Guide 23

Safety Precautions 9
Sealing, Lubrication And Cleaning 7
Separators
  Air/Oil 52
Service Check List 60
  Air Filter 60
  Every 1000 Hours Operation 60
  Every 125 Hours Operation 60
  Every 4000 Hours Operation 60
  Every 8 Hours Operation 60
  Every Year 60
  Motor Lubrication 60
Sheave Alignment 57
Starting & Operating Procedures
  Section 3 20
Starting The Unit 22
  Unit Cold 22
  Unit Hot 22
Stopping The Unit 22

Trouble Shooting
  Section 9 62
Troubleshooting Voltage Problems 65

Valve
  Thermal Control (Thermostatic Mixing) 52

Wiring
  Electrical 17

LIST OF ILLUSTRATIONS

Figure 1-1 – Compressor Cycle 7
Figure 1-2 – Compressor Illustration 8

Figure 2-1 – Typical Compressor Room 14
Figure 2-2 – Air Flow Chart 14
Figure 2-3 – Cold Weather Installation 15

Figure 4-1 – Control Schematic 25
Figure 4-2 – Key Pad 26
Figure 4-9 – Wiring Diagram – Wye Delta (200, 230 & 460 Volt) 30
Figure 4-10 – Wiring Diagram – Full Voltage 32
Figure 4-11 – Wiring Diagram – Full Voltage 34
Figure 4-12 – Wiring Diagram – Less Starter (200, 230 & 460 Volt) 36
Figure 4-13 – Wiring Diagram – Wye Delta (575 Volt) 38
Figure 4-14 – Wiring Diagram – Full Voltage (575 Volt) 40
Figure 4-15 – Wiring Diagram – Less Starter (575 Volt) 42

Figure 5-1 – Flow Diagram 44
Figure 5-2 – Approximate Oil System Capacities 46
Figure 5-3 – Oil Change Interval 46
Figure 5-4 – Oil Level Gauge, Oil Fill And Oil Drain 50
Figure 5-5 – Oil Filter 51
Figure 5-6 – Oil Separator 54

Figure 6-1 – Air Filter 55

Figure 7-1 – Belt Tension – J Section Micro-V Belts 59

SECTION 1
GENERAL INFORMATION

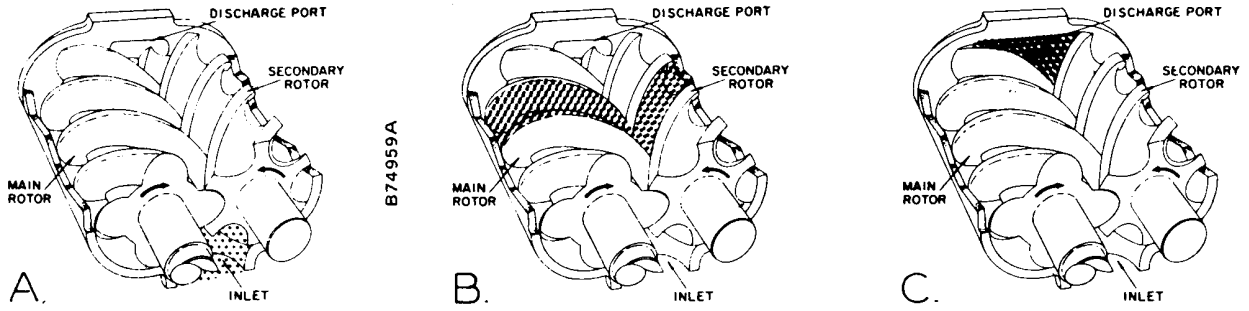

Figure 1-1 – COMPRESSOR CYCLE

COMPRESSOR - The rotary screw compressor is a single stage, positive displacement rotary machine using meshing helical rotors to effect compression. Both rotors are supported between high capacity roller bearings located outside the compression chamber. Single width cylindrical roller bearings are used at the inlet end of the rotors to carry part of the radial loads. Ball and roller bearings at the discharge end locate each rotor axially and carry all thrust loads and the remainder of the radial loads.

COMPRESSION PRINCIPLE (Figure 1-1) - Compression is accomplished by the main and secondary rotors synchronously meshing in a one-piece cylinder. The main rotor has four (4) helical lobes 90° apart. The secondary rotor has five (5) matching helical grooves 72° apart to allow meshing with main rotor lobes.

The air inlet port is located on top of the compressor cylinder near the drive shaft end. The discharge port is near the bottom at the opposite end of the compressor cylinder. *Figure 1-1 is an inverted view to show inlet and discharge ports*. The compression cycle begins as the rotors unmesh at the inlet port and air is drawn into the cavity between the main rotor lobes and the secondary rotor grooves (A). When the rotors pass the inlet port cutoff, air is trapped in the interlobe cavity and flows axially with the meshing rotors (B). As meshing continues, more of the main rotor lobe enters the secondary rotor grove, normal volume is reduced and pressure increases.

Oil is injected into the cylinder to remove the heat of compression and seal internal clearances. Volume reduction and pressure increase continues until the air/oil mixture trapped in the interlobe cavity by the rotors passes the discharge port and is released to the oil reservoir (C). Each rotor cavity follows the same “fill-compress-discharge” cycle in rapid succession to produce a discharge air flow that is continuous, smooth and shock free.

AIR FLOW IN THE COMPRESSOR SYSTEM (Figure 5-1, page 44) - Air enters the air filter and passes through the inlet unloader valve and on into the compression chamber where oil is injected into the air. After compression, the air/oil mixture passes into the oil reservoir where most of the entrained oil is removed by velocity change and impingement and drops back into the reservoir. The air and remaining oil then passes through the air/oil separator. The air then passes through the minimum pressure/check valve, the aftercooler and the moisture separator and into the plant air lines.

LUBRICATION, COOLING AND SEALING - Oil is forced by air pressure from the oil reservoir through the oil cooler, thermostatic mixing valve, and oil filter and discharge into the compressor main oil gallery. A portion of the oil is directed through internal passages to the bearings and shaft oil seal. The balance of the oil is injected directly into the compression chamber to remove heat of compression, seal internal clearances and lubricate the rotors.

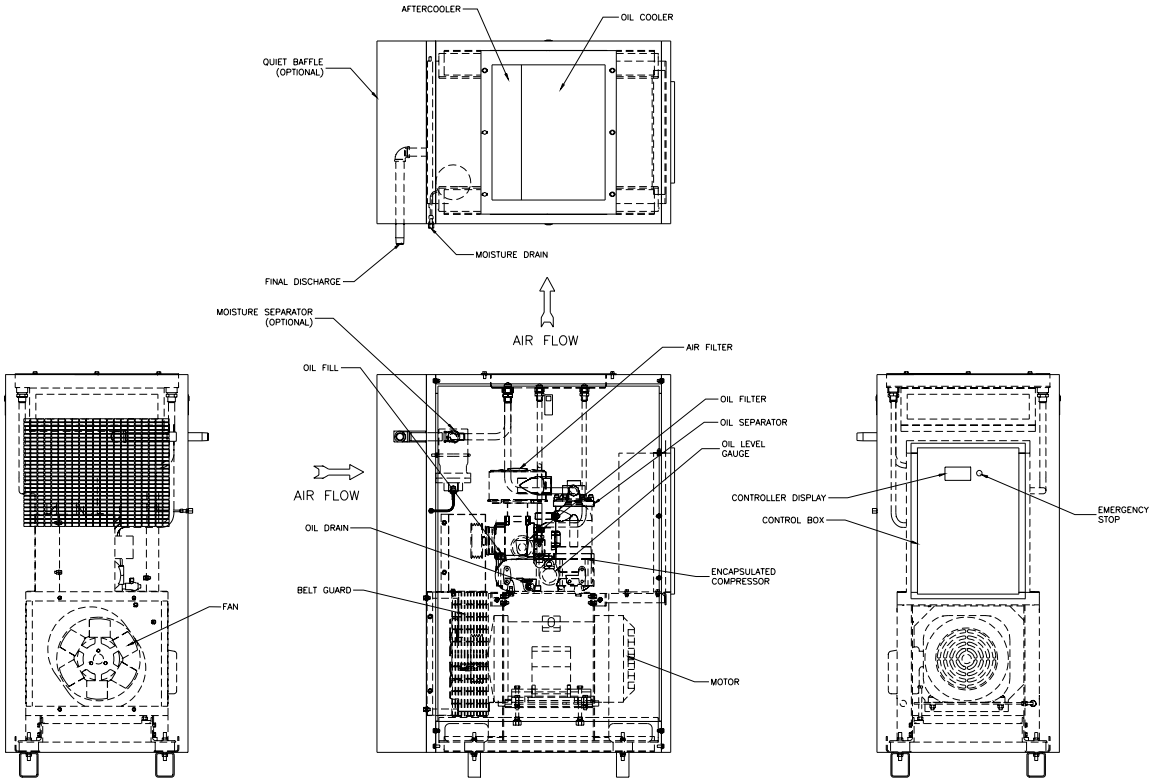

302EFC797-A
(Ref. Drawing)

Figure 1-2 – COMPRESSOR ILLUSTRATION

SAFETY PRECAUTIONS

Safety is everybody's business and is based on your use of good common sense. All situations or circumstances cannot always be predicted and covered by established rules. Therefore, use your past experience, watch out for safety hazards and be cautious. Some general safety precautions are given below:

DANGER

Failure to observe these notices could result in injury to or death of personnel.

- **Keep fingers and clothing away from revolving fan, drive coupling, etc.**
- **Do not use the air discharge from this unit for breathing – not suitable for human consumption.**
- **Do not loosen or remove the oil filler plug, drain plugs, covers, the thermostatic mixing valve or break any connections, etc., in the compressor air or oil system until the unit is shut down and the air pressure has been relieved.**
- **Electric shock can and may be fatal.**
- **Perform all wiring in accordance with the National Electrical Code (NFPA-70) and any applicable local electrical codes. Wiring and electrical service must be performed only by qualified electricians.**
- **Open the main disconnect switch, lockout and tagout before working on the control.**
- **Disconnect the compressor unit from its power source, lockout and tagout before working on the unit – this machine is automatically controlled and may start at any time.**

⚠ WARNING

Failure to observe these notices could result in damage to equipment.

- **<u>Stop the unit</u> if any repairs or adjustments on or around the compressor are required**
- **<u>Disconnect the compressor</u> unit from its power source, lockout and tagout before working on the unit – this machine is automatically controlled and may start at any time.**
- **<u>An Excess Flow Valve</u> should be on all compressed air supply hoses exceeding 1/2 inch inside diameter. (OSHA Regulation, Section 1926.302, or local regulations)**
- **<u>Do not exceed the rated maximum pressure values</u> shown on the nameplate.**
- **<u>Do not operate unit</u> if safety devices are not operating properly. Check periodically. Never bypass safety devices.**

DECALS



206EAQ077

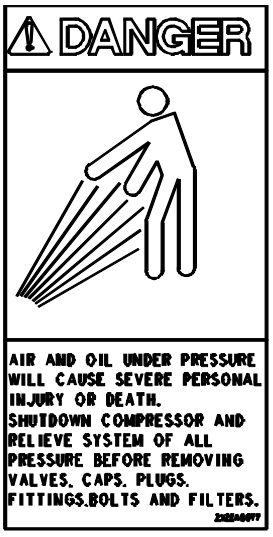

212EAQ077

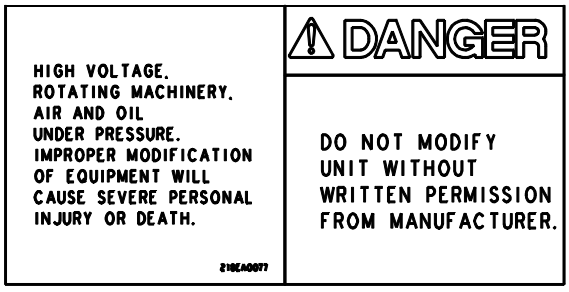

218EAQ077

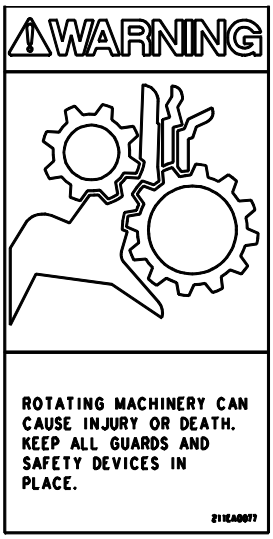

211EAQ077

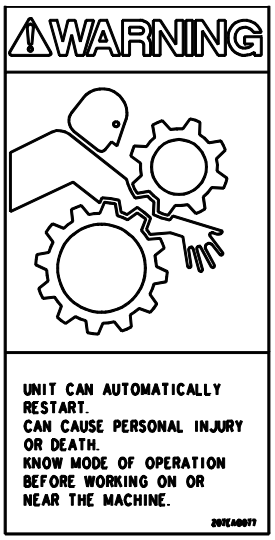

207EAQ077

DECALS

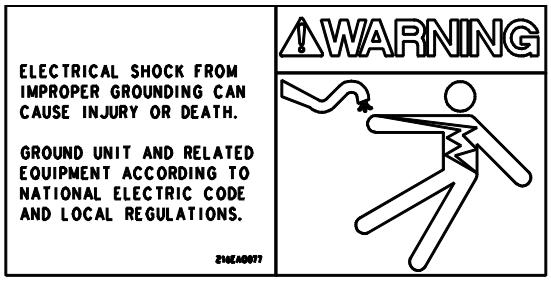

216EAQ077

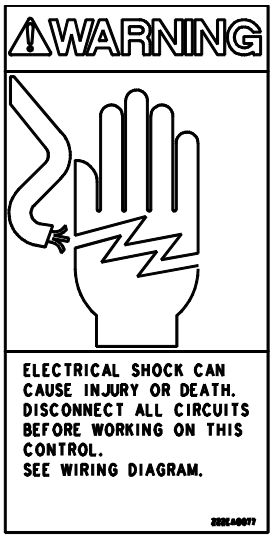

222EAQ077

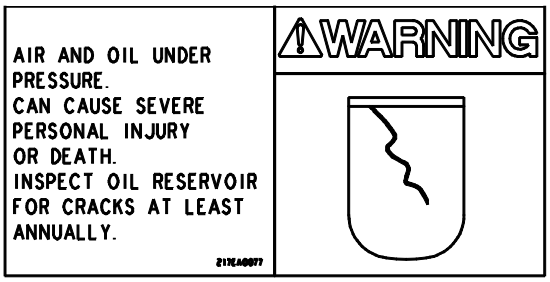

217EAQ077

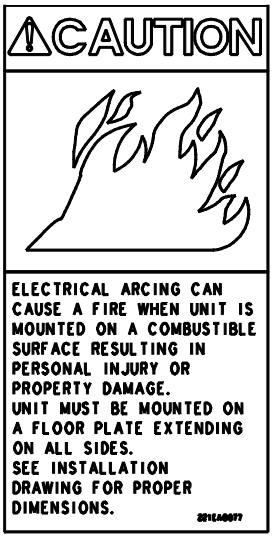

221EAQ077

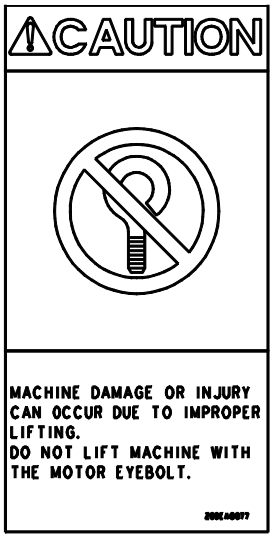

208EAQ077

SECTION 2
INSTALLATION

GENERAL - On receipt of the unit, check for any damage that may have been incurred during transit. Report any damage or missing parts as soon as possible.

CAUTION
Do not electric weld on the compressor or base; bearings can be damaged by passing of current.

LIFTING UNIT - Proper lifting and/or transporting methods must be used to prevent damage. Unit may be moved into location by lift truck.

CAUTION
Lift compressor unit under base only. Do not use other places such as motor, compressor or discharge manifold piping as lifting points.

DANGER
The eyebolts or lugs provided on the motor are for lifting the motor only and should not be used to lift any additional weight. All eyebolts must be securely tightened. When lifting the motor the lifting angle must not exceed 15 degrees. Failure to observe this warning may result in damage to equipment or personal injury.

LOCATION (Figure 2-1**,** page 14) - The compressor should be installed where it is protected from rain, snow and freezing temperatures, in a clean, well-lighted, well-ventilated area with ample space all around for maintenance. Select a location that provides a cool, clean, dry source of air. In some cases it may be necessary to install the air filter at some distance from the compressor to obtain proper air supply.

AIR-COOLED UNIT - A combination oil/aftercooler is supplied as standard equipment on all air-cooled units. The air-cooled unit with the standard enclosure requires sufficient flow for the compressor oil/aftercooling system and electric motor cooling (Figure 1-2, page 8). Air is drawn into the unit above the motor and discharged through the cooler. Do not block the air flow to and from the unit. Allow three and one half (3-1/2) feet to the nearest obstruction on the control box end of the unit. Allow two (2) feet to the nearest obstruction above and on other sides of unit.

For continuous efficiency, oil cooler cores must be periodically cleaned with either vacuum or compressed air. If wet cleaning is required, shield motor and spray on a mild soap solution and flush with clean water.

⚠ WARNING

For aluminum oil coolers, do not use any cleaning solution that is not compatible with aluminum. Use of improper solution may result in damage to the cooler.

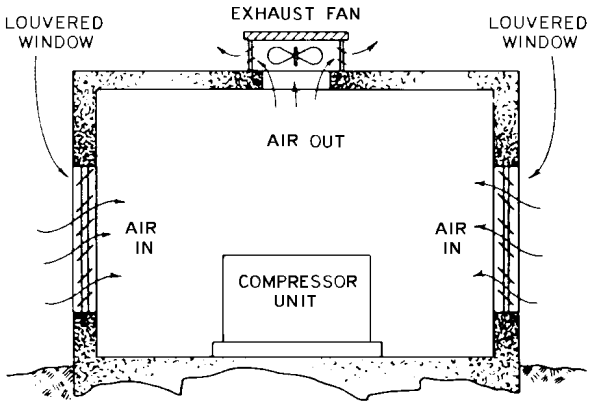

Figure 2-1 – TYPICAL COMPRESSOR ROOM

Minimum Air Flow* For Compressor And Cooling (cubic Feet/Minute)	
	Air Cooled
All Models	3000 cfm

* 80° F Inlet Air

Figure 2-2 – AIR FLOW CHART

FOUNDATION - The rotary screw compressor requires no special foundation, but should be mounted on a smooth, solid surface. Whenever possible install the unit near level. Temporary installation may be made at a maximum 5° angle lengthwise or 5° sidewise. Mounting bolts are not normally required. However, installation conditions such as piping rigidity, angle of tilt, or danger of shifting from outside vibration or moving vehicles may require the use of mounting bolts and shims to provide uniform support for the base. Belt alignment and tension should be checked after installation. (For information on belt alignment and tension, see SECTION 7, page 57.

OIL RESERVOIR DRAIN - The oil drain is piped from the bottom of the reservoir to the side of the frame. This drain is approximately 20 inches above the floor level.

CAUTION

If the compressor unit base is raised above floor level, the space between the floor and the base bottom must be closed with solid material all around to prevent recirculation of hot air from the oil cooler end and over temperature operation.

ENCLOSURE - The compressor, electric motor, oil cooler and aftercooler are mounted inside the enclosure.

Service panels are provided for maintenance access. Be sure to allow enough space around the unit for the panels to be removed. Any of the enclosure panels may be removed by opening the latch and lifting it up slightly.

DANGER

Do not operate the compressor with the fan and belt guard removed. Exposed fan and belts may cause injury to personnel.

CAUTION

The enclosure doors and panels must be closed and latched while the compressor is operating. Failure to close and latch the doors and panels will cause high temperature shutdowns.

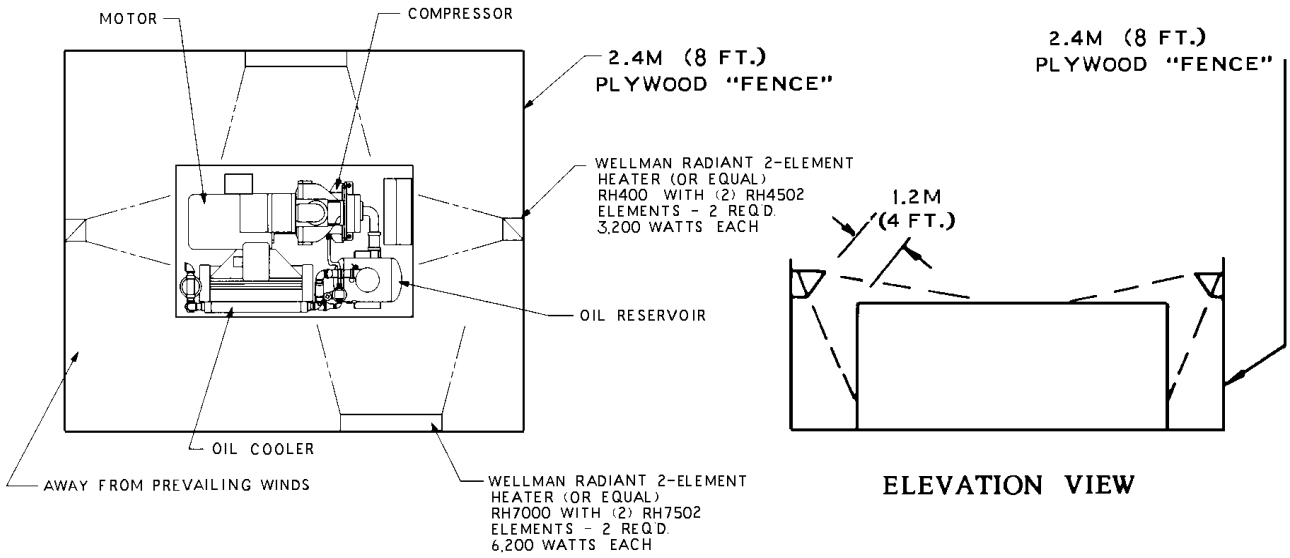

Figure 2-3 – COLD WEATHER INSTALLATION

INSTALLATION FOR COLD WEATHER OPERATION (Figure 2-3, page 15) - It is recommended that the unit be installed inside a shelter that will be heated to temperatures above freezing (32° F, 0° C). This will eliminate many of the problems associated with operating units in cold climates, such as freezing in control lines and downstream of the cooler.

Refer to Engineering Data Sheet 13-9-411 for the advantages of using the heat recovered from rotary compressors. This heat recovery could easily pay for an adequate shelter for the unit.

When an outside installation must be made, the precautions required will depend on the severity of the environment. The following are general guidelines for outside installations:

Cold Weather (Down To $+10^{o}$ F)

1. Be sure all drains, traps, and control lines, including pressure transducer lines are heated to avoid freezing of condensate. Heat tape with thermostat control is generally satisfactory for this purpose and can be obtained at various local plumbing or hardware outlets at nominal cost.

2. Provisions to bypass the aftercooler must be made. Since cold air contains very little moisture, successful operation can be achieved without the aftercooler.

3. Provide at least some simple shelter such as a plywood windbreak to protect against drifting snow.

4. Use only Gardner Denver AEON 9000SP lubricant.

5. Monitor unit carefully during start-up and operation to be sure it is functioning normally.

Remember unsheltered (outside) installations should be avoided where possible. Installation next to a heated building where enough heat can be used to keep the compressor room above freezing will save many complications in the operation and installation of the unit.

AUXILIARY AIR RECEIVER - An auxiliary air receiver is not required if the piping system is large and provides sufficient storage capacity to prevent rapid cycling. When used, an air receiver should be of adequate size, provided with a relief valve of proper setting, a pressure gauge and a means of draining condensate

STANDARD MOISTURE SEPARATOR/TRAP - The unit is equipped with a built-in aftercooler, a combination moisture separator and trap piped into the system down stream of the aftercooler.

CONTROL PIPING - Control piping is not necessary since the rotary screw unit is factory wired and piped for the control system specified.

INLET LINE - Where an inlet line is used between the air filter and the compressor, it must be thoroughly cleaned on the inside to prevent dirt or scale from entering the compressor. **If welded construction is used, the line must be shot blasted and cleaned to remove welding scale**. In either case, the inlet line must be coated internally by galvanizing or painting with a moisture and oil-proof sealing lacquer. Up to ten (10) feet in length, the inlet line should be the full size of the inlet opening on the compressor. If an extra-long line is necessary, the pipe size should be increased according to “Inlet Line Length Chart”, page 17.

Accessibility for inlet air filter servicing must be considered when relocating the filters from the unit to a remote location.

INLET LINE LENGTHS

Length of Inlet Line	Diameter of Pipe Size
0 to 10 Feet	Same as Compressor Inlet Opening
10 to 17 Feet	One Size Larger Than Inlet Opening
17 to 38 Feet	Two Sizes Larger Than Inlet Opening

DISCHARGE SERVICE LINE - The discharge service line connection is made at the left hand corner of the package when viewed from the control box end. A hand operated valve, (air service valve) must be installed between the unit and the customer's air system. If a fast operating valve such as a ball valve is used, it must be closed slowly to give the intake valve time to shut and keep the discharge pressure from spiking.

⚠ WARNING

The controller has an automatic start/stop sequence built in. You do NOT need to close the air service valve. Closing the air service valve on start-up or prior to shutdown will cause rapid cycling, and could cause a high pressure shutdown.

When manifolding two or more rotary screw units on the same line, each unit is isolated by the check valve in the unit discharge line.

If a rotary screw unit is manifolded to another compressor, be sure the other compressor has a check valve in the line between the machine and the manifold.

If a rotary screw and a reciprocating compressor are manifolded together, an air receiver must be located between the two units.

⚠ DANGER

Discharge air used for breathing will cause severe injury or death.

Consult filtration specialists for additional filtration and treatment equipment to meet health and safety standards.

ELECTRICAL WIRING - Standard Units - The compressor package is factory wired for all connections from the starter to the motor, for the horsepower and voltage specified on the order. The standard unit is supplied with open drip proof motors, and a NEMA 4 starter and controls enclosure. Totally enclosed motors are available as factory options. See "Location" paragraph on page 13, for distance to the nearest obstruction on the control box side of the package.

Perform all wiring in accordance with the National Electrical Code (NFPA-70) and any applicable local electrical codes. Wiring must be performed only by qualified electricians.

⚠ WARNING

Electrical shock can cause injury or death. Open main disconnect switch, lockout and tagout before working on control box.

GROUNDING - Equipment must be grounded in accordance with Section 250 of the National Electrical Code.

⚠ WARNING

Failure to properly ground the compressor package could result in injury or death. Install ground wiring in accordance with the National Electrical Code and any applicable local codes.

MOTOR LUBRICATION - Long time satisfactory operation of an electric motor depends in large measure on proper lubrication of the bearings. The following charts show recommended grease qualities and regreasing intervals for ball bearing motors. For additional information, refer to the motor manufacturer's instructions.

The following procedure should be used in regreasing:

1. Stop the unit.
2. Disconnect, lockout and tagout the unit from the power supply.
3. Remove the relief plug and free hole of hardened grease.
4. Wipe lubrication fitting clean and add grease with a hand-operated grease gun.
5. Leave the relief plug temporarily off. Reconnect unit and run for about 20 minutes to expel the excess grease.
6. Stop the unit. Replace the relief plug.
7. Restart the unit.

⚠ WARNING

Rotating machinery can cause injury or death. Open main disconnect, lockout and tagout power supply to starter before working on the electric motor.

ELECTRIC MOTOR GREASE RECOMMENDATIONS (-30° TO 50° C)

MANUFACTURER	TRADE NAME
CHEVRON	SRI #2
SHELL	DOLIUM R
EXXON	UNIREX #2
EXXON	POLYREX

ELECTRIC MOTOR REGREASING INTERVAL

Type of Service	Typical	Rating	Relubrication Interval
Standard	One or Two Shift Operation	Up to 150 HP (112 KW)	18 Months
		Above 150 HP (112 KW)	12 Months
Severe	Continuous Operation	Up to 150 HP (112 KW)	9 Months
		Above 150 HP (112 KW)	6 Months
Very Severe	Dirty Locations, High Ambient Temperature	Up to 150 HP (112 KW)	4 Months
		Above 150 HP (112 KW)	2 Months

SECTION 3
STARTING & OPERATING PROCEDURES

PRESTART-UP INSTRUCTIONS - A new unit as received from the factory has been prepared for shipping only. Do not attempt to operate the unit until checked and serviced as follows:

1. **Compressor Oil** - The oil must be checked before starting the unit and every 8 hours of operation. For instructions on checking the oil and the proper oil level, refer to “Compressor Oil Filter”, SECTION 5, page 44.

   Do not mix different type oils. Unit is shipped filled with Gardner Denver AEON 4000 Lubricating Coolant which is suitable for the first 4000 hours under normal operating conditions. AEON 9000SP is also available. Check the decal on the reservoir to be sure which lubricant is in the machine.

   REPLACE OIL FILTER EVERY 1000 HOURS.

NOTICE
Regular maintenance and replacement at required intervals of the oil filter, air filter and air/oil separator is necessary to achieve maximum service and extended drain intervals of AEON 4000 lubricant. Use only genuine Gardner Denver filters designed and specified for this compressor.

DANGER
Always stop the unit and release air pressure before removing oil filler plug. Failure to release pressure may result in personal injury or death.

2. **Air Filter** - Inspect the air filter to be sure it is clean and tightly assembled. Refer to SECTION 6, page 55 for complete servicing instructions. Be sure the inlet line, if used, is tight and clean.

3. **Piping** – Refer SECTION 2, page 17 “Discharge Service Line” and make sure all piping meets all recommendations.

4. **Electrical** - Check the wiring diagrams furnished with the unit to be sure it is properly wired. See **Error! Reference source not found.** thru **Error! Reference source not found.**, pages **Error! Bookmark not defined.** thru **Error! Bookmark not defined.**, for general wiring diagrams and SECTION 2, page 13, for “Electrical Wiring”.

5. **Grounding** - Unit must be properly grounded according to Section 250 of the National Electrical Code.

WARNING
Failure to properly ground the compressor package could result in controller malfunction.

6. **Rotation** - Check for correct motor rotation by jogging the motor. See “Unit Setup Adjust Menu” in Controller Operating and Service Manual. Compressor drive shaft rotation must be counterclockwise, standing facing the compressor sheave.

⚠ WARNING

Operation with incorrect motor rotation can damage equipment and cause oil eruption from the compressor inlet. When checking motor rotation, induce minimum rotation (less than one revolution if possible). Never allow motor to reach full speed.

⚠ WARNING

The compressor unit’s direction of rotation must be check every time the compressor is reconnected to the power supply.

7. **System Pressure** - The discharge pressure of the unit is set at the factory. To change the discharge pressure, set the controls to the desired load pressure. DO NOT EXCEED THE MAXIMUM OPERATING PRESSURE ON THE COMPRESSOR NAMEPLATE. See "Operation Adjustments Menu" in Controller Operating and Service Manual.

⚠ WARNING

Operation at excessive discharge air pressure can cause personal injury or damage to equipment. Do not adjust the full discharge air pressure above the maximum stamped on the unit nameplate.

8. **Operating Mode** - Refer to SECTION 4, page 25 for detailed information on the control system.

9. **Enclosure** - Check for damaged panels or doors. Check all screws and latches for tightness. Be sure doors are closed and latched.

⚠ DANGER

The compressor starts and stops automatically. Automatic restarting can cause injury or death. Open, lockout and tagout main disconnect and any other circuits before servicing the unit.

⚠ WARNING

The enclosure doors must be in place and fastened down to keep the compressor package from overheating when the compressor is running.

⚠ WARNING

After an emergency stop, be sure that the pressure in the air/oil reservoir is less than 5 psig. Wait one minute or more before restarting.

⚠ WARNING

The controller has an automatic start/stop sequence built in. You do NOT need to close the air service valve. Closing the air service valve on start-up or prior to shutdown will cause rapid cycling, and could cause a high pressure shutdown.

STARTING THE UNIT - Observe the following starting procedures:

Unit Cold:

1. Open the air service valve (customer furnished) between the main air system and the check valve on the package.

2. Turn on power to the compressor package. To start press STOP/RESET, then press RUN.

3. Run for approximately five minutes or until the temperature stabilizes.

   The unit is equipped with a minimum (45 psig) pressure/check valve. No special procedure is required to maintain the unit reservoir pressure.

Unit Hot (No warm-up period is required):

1. Open the air service valve (customer furnished) between the main air system and the check valve on the package.

2. Run for approximately one minute. The unit is equipped with a minimum (45 psig) pressure/check valve, no special procedure to maintain the unit reservoir pressure is required.

DAILY CHECK - Refer to “Maintenance Schedule,” SECTION 8 page 60.

STOPPING THE UNIT:

1. To stop compressor operation, press STOP/RESET.

2. Wait approximately one minute to allow the compressor to stop. The oil reservoir will automatically blow down as the motor stops.

Quick Start Guide

Operation of the AirSmart controller is easy. Simply select a Target Pressure and then press the Run 

button to start the compressor, no other settings are required. The Target Pressure comes preset to 100 PSI from the factory. The Unload Pressure is preset to 110 PSI. If a different pressure setting is desired, the following steps can be used as a guide.

Setting the Target Pressure

The Target Pressure setting is used to set the operating point of the compressor. To make any adjustments in the operation of the compressor, the machine must be stopped and in the Ready mode. Stop the compressor by pressing the Stop/Reset 

button. The front panel display should read “READY” on line 3.

```
0  PSI                  75°F
10  HRS        AUTOMATIC
              READY
NO  SERVICE  ADVISORY
```

Next, press the Enter 

button to access the Adjustment Menu tree

```
    ADJUSTMENT  MENU
OPERATION  ADJUSTMENT

  (SELECT  SUB  MENU)
```

Since the Target Pressure setting is under the Operation Adjustment menu, press Enter 

again to access that sub-menu

```
OPERATION  ADJUSTMENT
LANGUAGE-LANGUAGE
     ENGLISH  (US)
(SELECT  PARAMETER)
```

The Target Pressure is the second item in the Operation Adjustment sub-menu so press the Down 
button to navigate to the Target Pressure setting.

```
OPERATION  ADJUSTMENT
TARGET  PRESSURE
      100  PSI
(SELECT  PARAMETER)
```

To change the Target Pressure, press the Enter  button to edit the value.

A flashing cursor will appear covering the least significant digit in the Target Pressure value, use the Plus  and Minus  buttons to change its value. Use the Right  and Left  buttons to move the cursor to other digits in the Target Pressure value. When the desired Target Pressure value is displayed, press the Enter  button to save the new value. Pressing the Stop/Reset  button will abort the change and restore the previous value.

In order to save the changes made to parameters, press the Stop/Reset button to go back to the heading of the current menu and then press the Stop/Reset button again. If parameter changes have been made, the following screen will appear.

To permanently save the changes that were made, press the Enter  button. If the Stop/Reset button is pressed, the parameter changes will be lost the next time the compressor power is turned off.

Setting The Unload and Load Pressure

After setting the Target Pressure, set the Unload and Load Pressures values in a similar fashion. The Unload pressure is the third item in the Operation Adjustment sub-menu so press the Down  button to navigate to the Unload Pressure setting. The Unload Pressure will control at which pressure the compressor unload and stops.

The Load pressure is the fourth item in the Operation Adjustment sub-menu so press the Down  button to navigate to the Load Pressure setting. The Load Pressure will control at which pressure the compressor will startup again after unloading.

SECTION 4
CONTROLS & INSTRUMENTATION

GENERAL DESCRIPTION

The Gardner Denver rotary screw compressor is prewired with all controls, motor, and starter for the voltage and horsepower at the time of ordering. It is necessary only to connect the compressor unit to the correct power supply and to the shop air line. A standard compressor unit consists of the compressor, oil reservoir, oil cooling system and filter, motor type as specified, NEMA 4 starter / control box, and control components as described below.

AirSmart® OPERATION

Operation of the "AirSmart" is dependent on selection of an operating mode from the controller keypad. Prior to starting, the STOP/RESET key must be pressed to place the controller into its READY state (as indicated on the display). Compressor operation may then be started by pressing the RUN key. While in any operating mode, the display will indicate the mode, and the operating light will be on.

Press the STOP/RESET key at any time to stop the compressor under normal conditions.

AUTOMATIC is the most common selected mode of operation, as it automatically will operate the compressor unit in the most efficient manner for the demand of the air system. Refer to the controller manual for descriptions of other modes.

⚠ WARNING

Automatic restarting or electrical shock can cause injury or death. Open, lockout and tagout main disconnect and any other circuits before servicing unit.

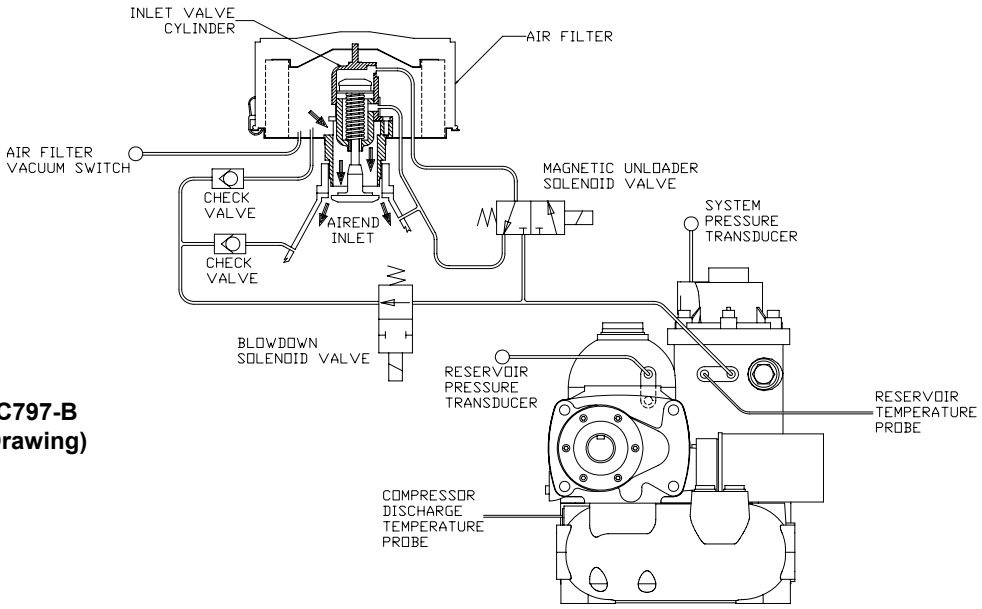

303EFC797-B
(Ref. Drawing)

Figure 4-1 – CONTROL SCHEMATIC

CONTROL DEVICES

Controller - This compressor unit features the "AirSmart" controller, which integrates all the control functions under microprocessor control. Its functions include safety and shutdown, compressor regulation, operator control, and advisory/maintenance indicators. The keypad and display provide the operator with a logical and easily operated control of the compressor and indication of its condition. The controller is factory adjusted for the compressor package, but allows tuning for specific applications.

Detailed instructions for the controller are found in the “AirSmart” Controller Operating and Service Manual.

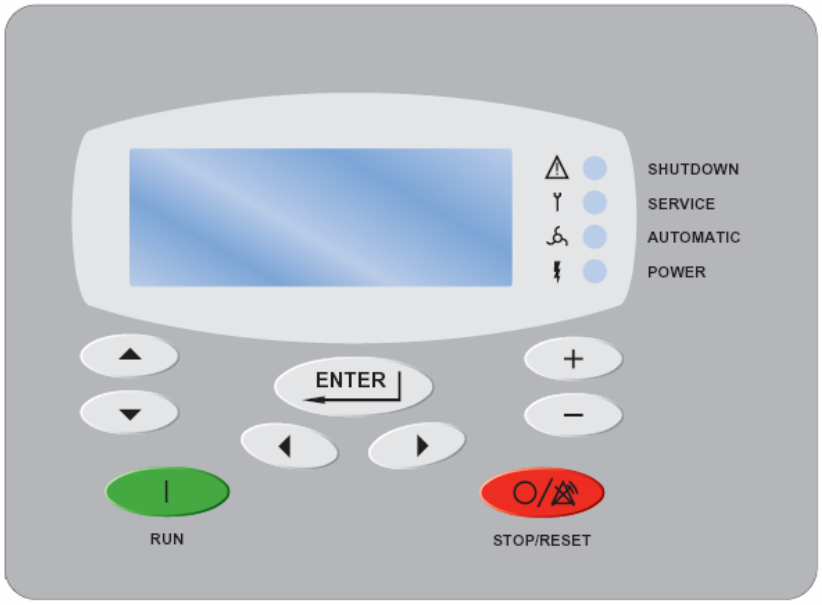

Figure 4-2 – KEY PAD

Relief Valve - A pressure relief valve is installed in the final discharge line and set to approximately 120-125% of the unit's full load operating pressure for protection against overpressure. Periodic checks should be made to ensure its operation.

The relief valve should be tested for proper operation at least once every year. To test the relief valve, raise the system operating pressure to 75% of the relief valve set pressure and manually open the valve by turning the cap.

⚠ WARNING

When the relief valve opens, a stream of high velocity air is released, resulting in a high noise level and possible discharge of accumulated dirt or other debris. Always wear eye and ear protection and stand clear of the discharge port when testing the relief valve to prevent injury.

⚠ CAUTION

Never paint, lubricate or alter a relief valve. Do not plug vent or restrict discharge.

⚠ WARNING

Operation of the unit with improper relief valve setting can result in severe personal injury or machine damage. Ensure properly set valves are installed and maintained.

Oil Level Gauge - This gauge is located on the oil reservoir and indicates the oil level. See “Oil Level Gauge”, Figure 5-4, page 50, for how to read oil level.

Minimum Discharge Pressure/Check Valve - An internal spring-loaded minimum pressure valve is used in the final discharge line to provide a positive pressure on the coolant system of the compressor even if the air service valve is fully open to atmospheric pressure. This valve also functions as a check valve to prevent back flow of air from the shop air line when the unit stops, unloads, or is shut down.

The valve incorporates an orifice which, when air is flowing through it, maintains pressure in the oil reservoir. A spring-loaded piston valve senses air pressure on the upstream (reservoir) side of the valve. When the system pressure rises, the spring is overridden and the valve opens to full porting.

Inlet Valve (Figure 4-1, page 25) **-** The Inlet valve restricts the inlet to control delivery and closes to unload the compressor. At shutdown, the inlet valve closes to prevent the back flow of air.

The inlet valve position is controlled by air pressure in its piston cylinder, which is controlled by the "AirSmart" through the magnetic unloader solenoid valve. When the top of the cylinder is pressurized, the inlet opens for full air delivery. When pressure is relieved from the cylinder, the inlet valve closes to restrict air flow and compressor delivery.

Magnetic Unloader Solenoid Valve (Figure 4-1, page 25) **-** This valve controls the position of the inlet valve in response to signals from the "AirSmart". When de-energized, pressure is relieved from the top of the inlet valve cylinder to unload the compressor. When the solenoid valve is energized, reservoir pressure is supplied to the top of the cylinder to load the compressor.

Check Valve (Figure 4-1, page 25) **-** This valve is normally closed while the compressor is loaded or stopped. While running unloaded, it opens to admit a small amount of purge air to the compressor inlet. This reduces compressor knock, and provides enough air to pressurize the controls during startup.

Blowdown Valve (Figure 4-1, page 25) **-** The blowdown valve is a two-way solenoid valve which is piped into the oil reservoir outlet ahead of the minimum pressure valve. When the solenoid is de-energized, the valve opens and the coolant system is blown down. When the solenoid is energized, the valve closes to allow the coolant system to pressurize.

System Pressure Transducer (Figure 4-1, page 25) **-** This transducer is connected after the minimum pressure valve. It converts the pressure in the plant air system into an electrical signal for use by the "AirSmart" controller for modulation and control.

Reservoir Pressure Transducer (Figure 4-1, page 25) **-** This transducer is connected to the coolant system. Its signal is used to prevent loaded starts, monitor oil pressure, and to monitor the condition of the separator.

Air Filter Vacuum Switch (Figure 4-1, page 25) **-** This switch is used to monitor air filter condition and alert the user if the filter requires service or replacement.

CAUTION

Machine damage will occur if compressor is repeatedly restarted after any one of the shutdown modes stops operation of the unit. Find and correct the malfunction before resuming operation.

Discharge Thermistor (Figure 4-1, page 25) **-** This sensor is located directly in the compressor discharge. Its signal is used to monitor compressor temperature and shut down the compressor if a coolant problem is detected.

Reservoir Thermistor (Figure 4-1, page 25) **-** This sensor is located in the reservoir/separator housing and is used to monitor temperature and shut down the compressor if temperature problems occur at the separator.

Emergency Stop Pushbutton - This is a maintained pushbutton, and removes power from the controller outputs regardless of controller status. It is located on the middle section of the control box door, below the keypad. This should be used for emergency purposes only - use the keypad [STOP/RESET] for normal controlled stopping.

WARNING

Automatic restarting or electrical shock can cause injury or death. Open and lock main disconnect and any other circuits before servicing unit.

Power Supply – This device changes the incoming AC supply voltage to 24 volts DC for use by all unit control devices. For 575 volt AC units only, a control transformer is provided to supply 230-240 volts AC input to the power supply. A secondary fuse is provided on the control transformer. Refer to adjacent labeling for replacement information.

Fuse Blocks – Two class CC fuse blocks provide line side protection for the power supply and control transformer, as applicable.

Terminal Strip - This provides connections for all 24 volt DC controlled devices not directly connected to the “AirSmart” controller.

Main Starter - This starter is used to provide control and overload protection for the main drive motor. Wiring diagrams for typical full boltage applications are illustrated on pages **Error! Bookmark not defined.** thru **Error! Bookmark not defined.**. For Wye Delta and less starter applications, refer to the wiring diagram included in each control box enclosure.

Overload protection is provided for each motor on full voltage and Wye Delta applications. The overloads are adjustable and are factory set based on the motor nameplate amps and the instructions located inside the control box door. Less starter applications utilize a control relay for control of a remote mounted motor starter (not provided with compressor package).

Changing Minimum Pressure/Check Valve Seals



DANGER

Air/oil pressure will cause severe personal injury or death. Shut down compressor, relieve system of all pressure, disconnect, lockout and tagout power supply to the starter before removing valves, caps, plugs, fittings, bolts and filters.

1. Be sure the unit is completely off and that no air pressure is in the oil reservoir.
2. Disconnect, lockout and tagout the power supply to the starter.
3. Tighten the nut down on the minimum pressure/check valve cover.
4. Remove the six (6) bolts holding the cover onto the separator housing.
5. Remove the snap ring in the cover.
6. Remove the internal parts (see Parts List Book) and replace the seals in the minimum pressure/check valve.
7. Re-assemble valve, including the snap ring.
8. Tighten the cover down to the separator housing.
9. Loosen the nut on top of the minimum pressure/check valve .05 to .08 inches.
10. Run the unit and check for leaks.

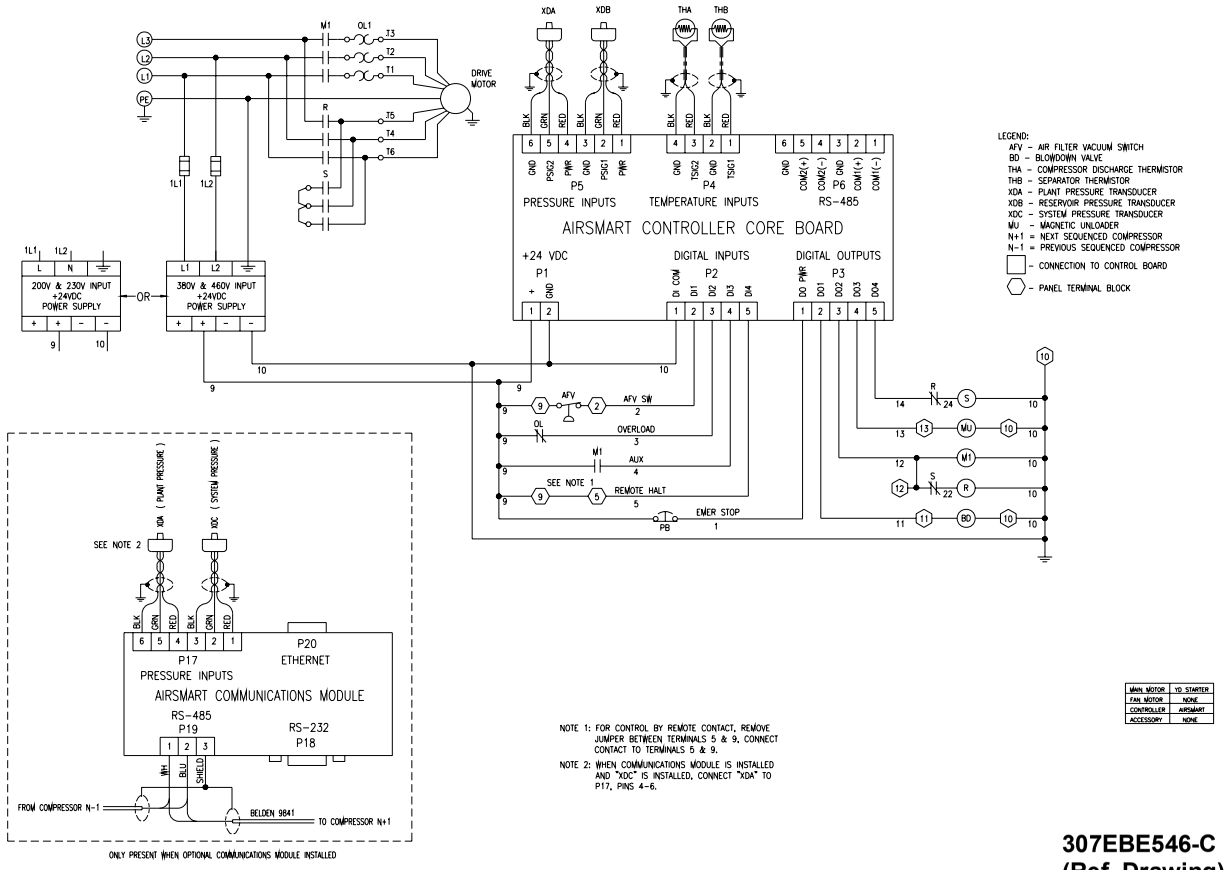

307EBE546-C
(Ref. Drawing)
Page 1 of 2

Figure 4-3 – WIRING DIAGRAM – WYE DELTA (200, 230 & 460 VOLT)

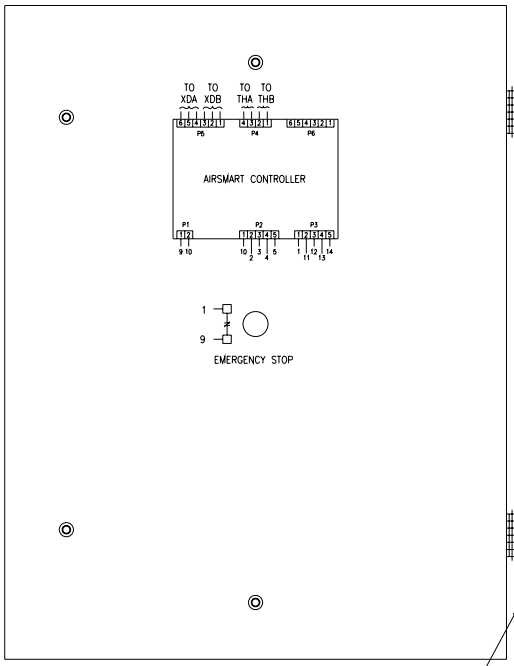

REAR VIEW OF DOOR

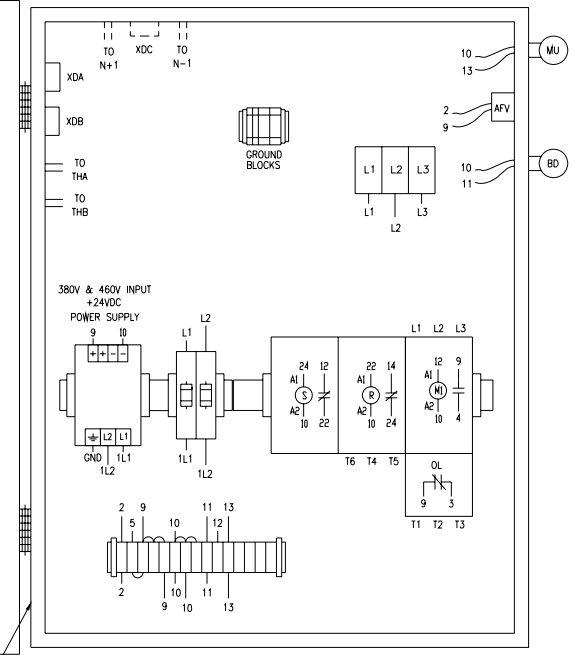

FRONT VIEW OF BOX INTERIOR (DOOR OPEN)

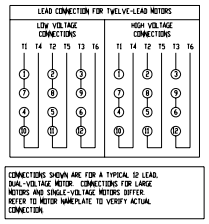

TO DRIVE MOTOR

307EBE546-C
(Ref. Drawing)
Page 2 of 2

NOTE: POWER SUPPLY CONNECTIONS SHOWN IN CONTROL BOX ARE FOR 380 & 460 VOLT APPLICATIONS. FOR 200 & 230 VOLT APPLICATIONS, USE POWER SUPPLY CONNECTIONS AS SHOWN BELOW.

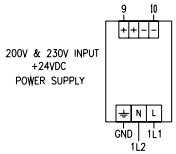

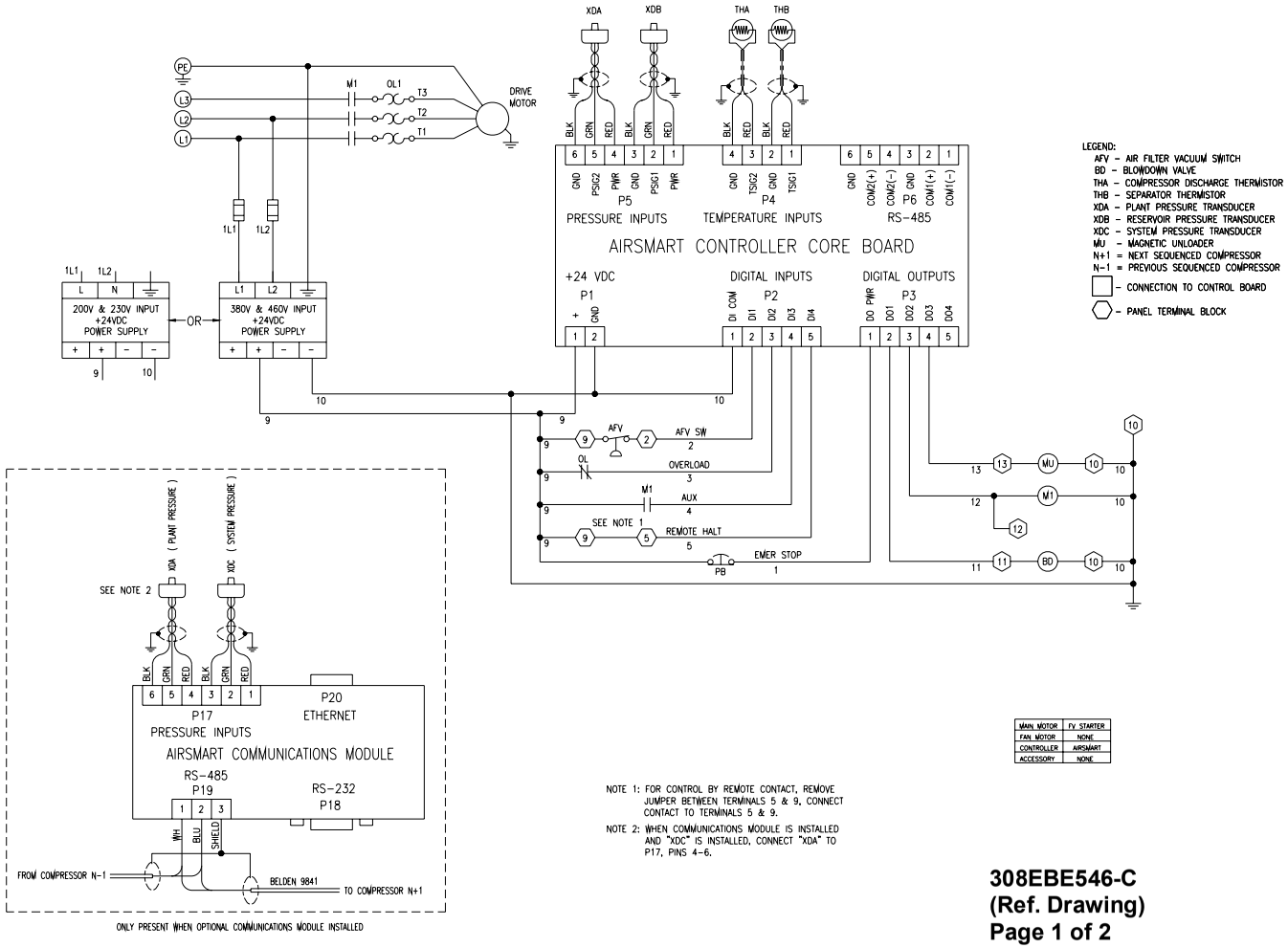

308EBE546-C
(Ref. Drawing)
Page 1 of 2

Figure 4-4 – WIRING DIAGRAM – FULL VOLTAGE
15 HP (200, 230 & 460 VOLT)
20 HP (230 & 460 VOLT)
25 & 30 HP (460 VOLT)

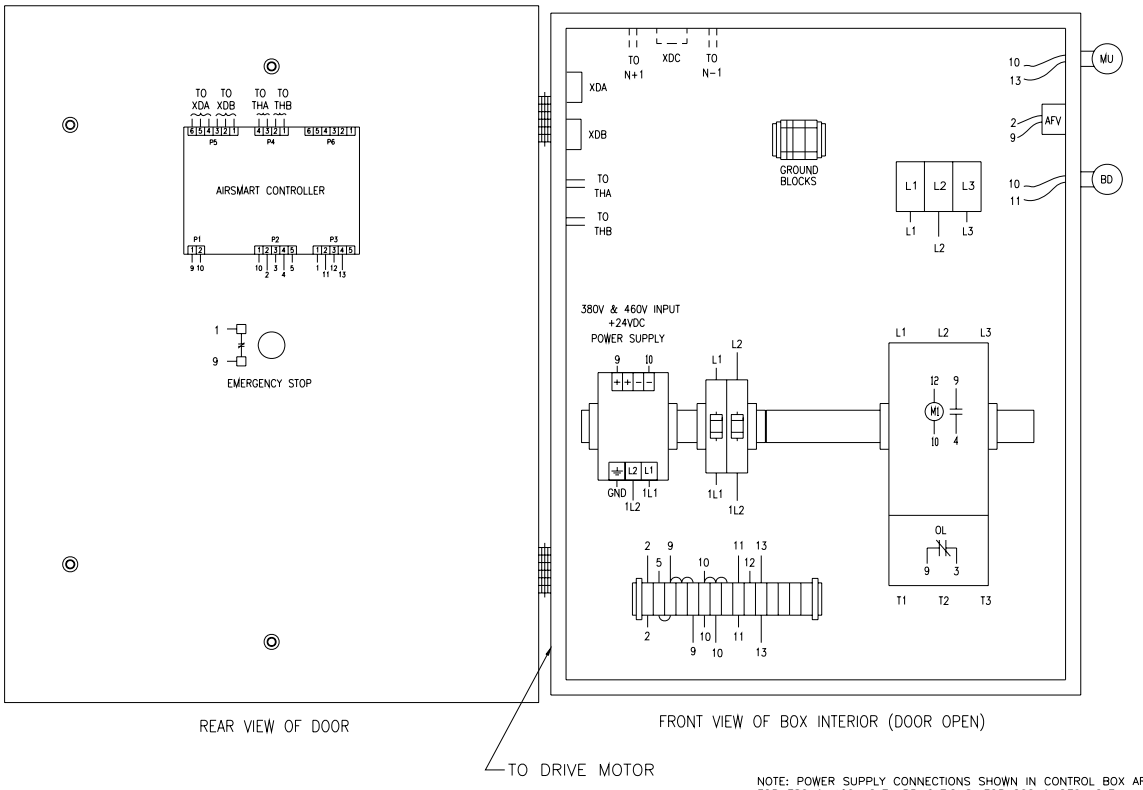

NOTE: POWER SUPPLY CONNECTIONS SHOWN IN CONTROL BOX ARE FOR 380 & 460 VOLT APPLICATIONS. FOR 200 & 230 VOLT APPLICATIONS, USE POWER SUPPLY CONNECTIONS AS SHOWN BELOW.

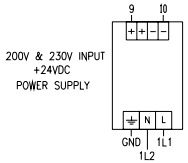

308EBE546-C
(Ref. Drawing)
Page 2 of 2

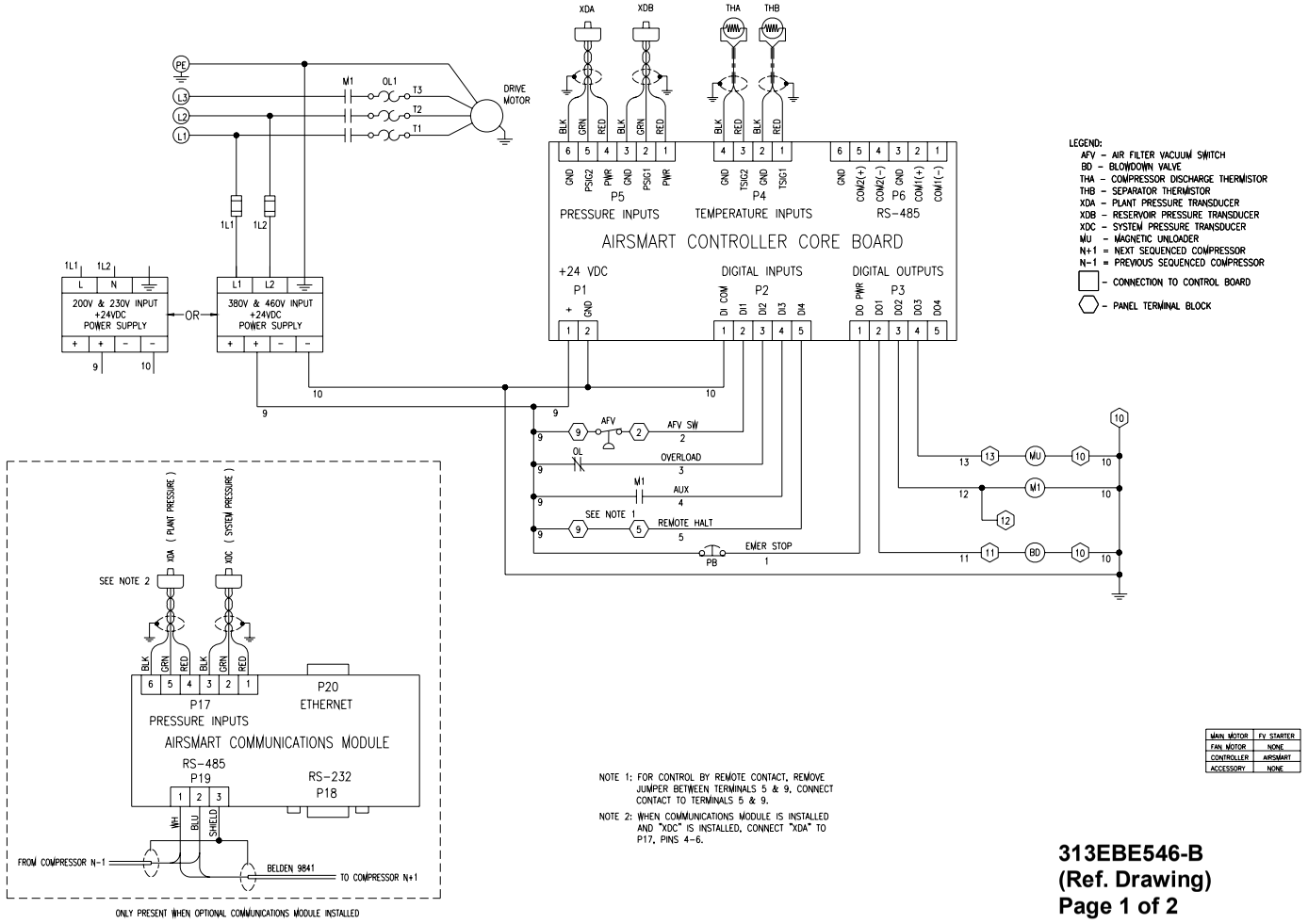

Figure 4-5 – WIRING DIAGRAM – FULL VOLTAGE
20 HP (200 VOLT)
25 & 30 HP (200 & 460 VOLT)

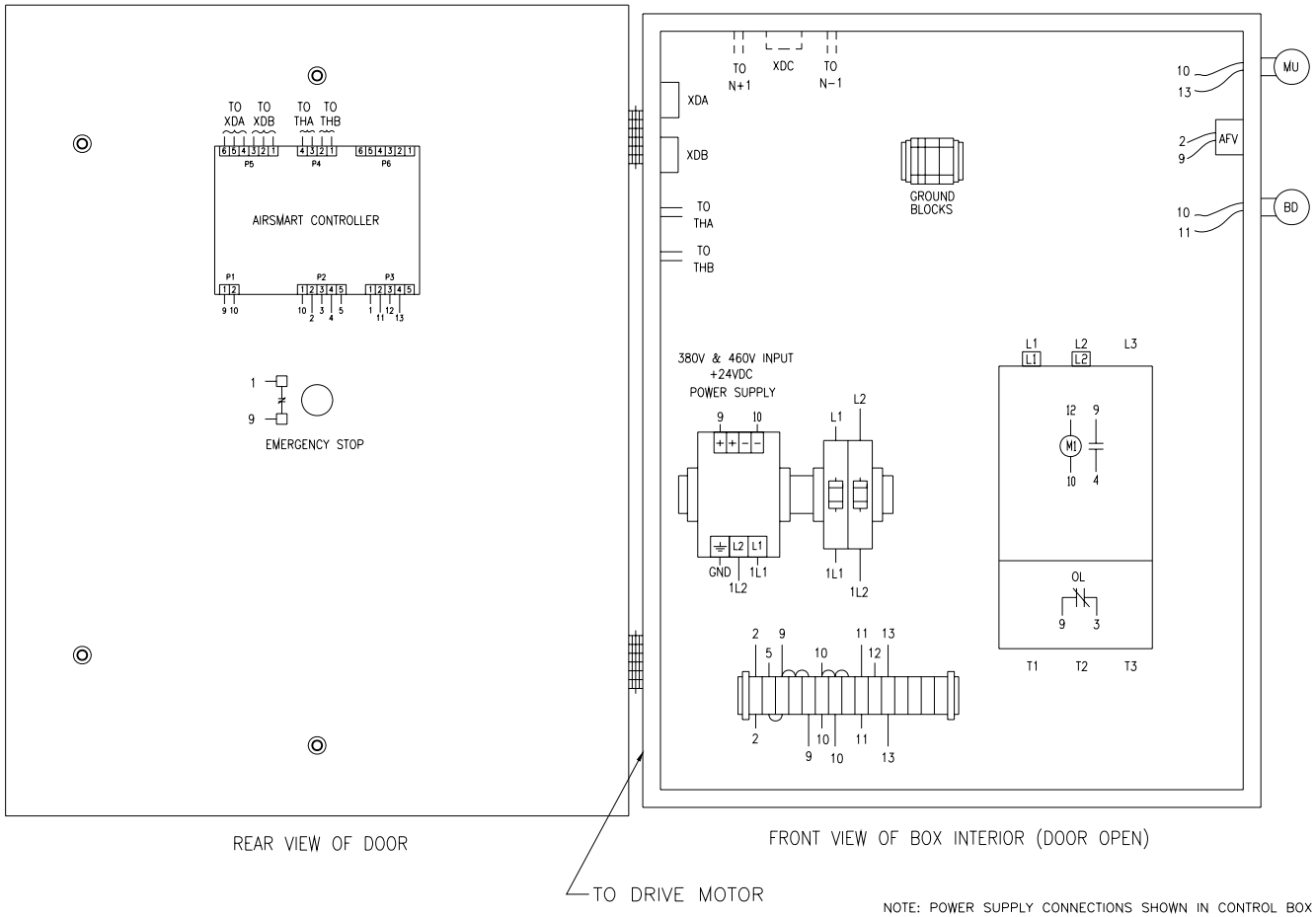

NOTE: POWER SUPPLY CONNECTIONS SHOWN IN CONTROL BOX ARE FOR 380 & 460 VOLT APPLICATIONS. FOR 200 & 230 VOLT APPLICATIONS, USE POWER SUPPLY CONNECTIONS AS SHOWN BELOW.

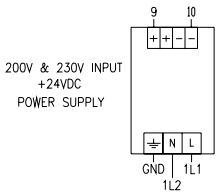

313EBE546-B
(Ref. Drawing)
Page 2 of 2

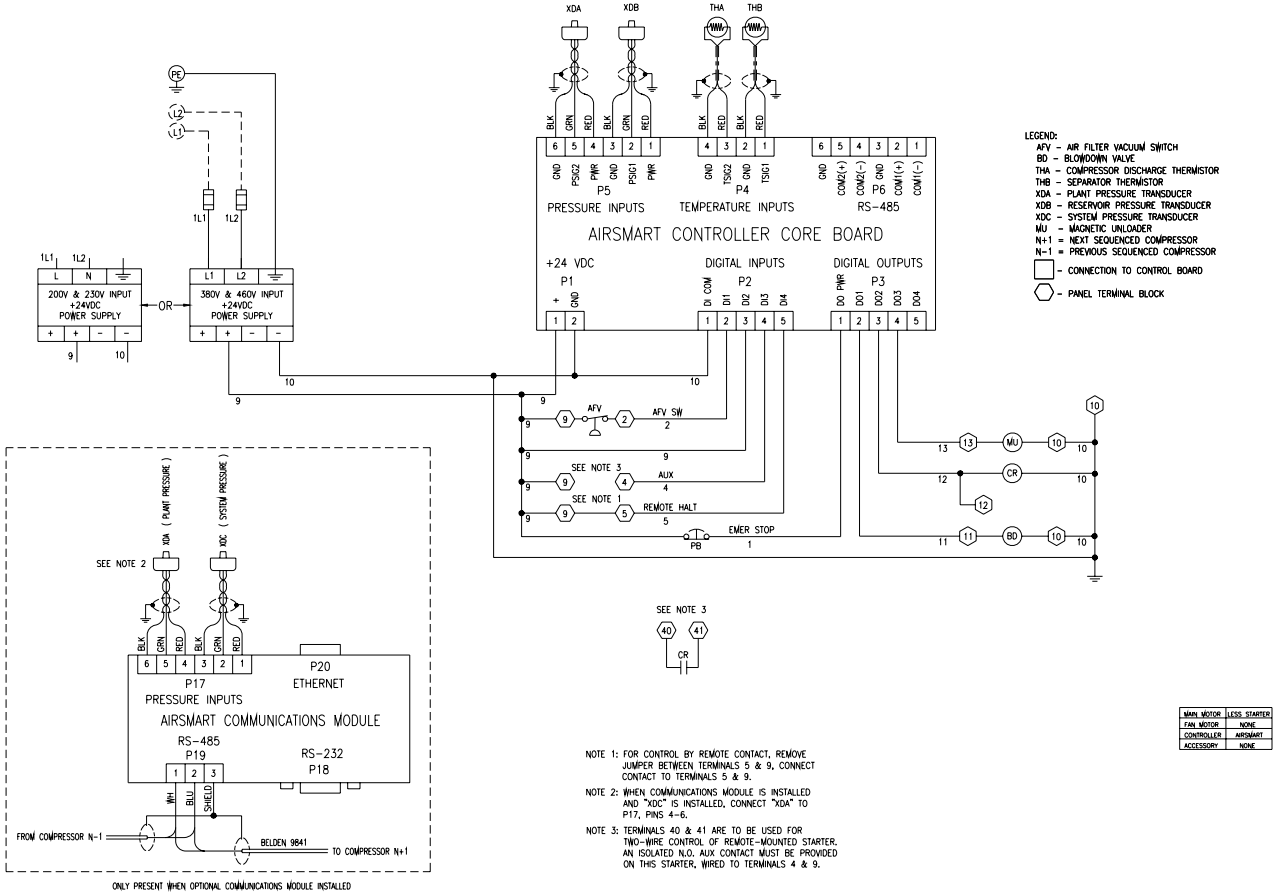

309EBE546-C
(Ref. Drawing)
Page 1 of 2

Figure 4-6 – WIRING DIAGRAM – LESS STARTER (200, 230 & 460 VOLT)

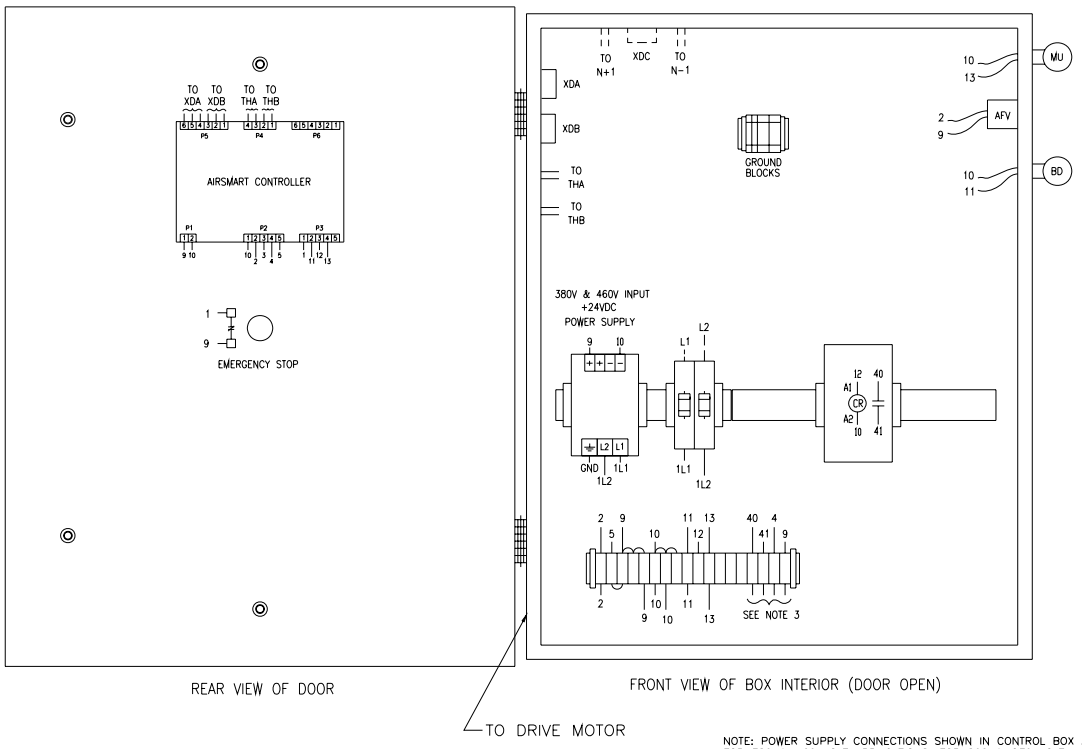

NOTE: POWER SUPPLY CONNECTIONS SHOWN IN CONTROL BOX ARE FOR 380 & 460 VOLT APPLICATIONS. FOR 200 & 230 VOLT APPLICATIONS, USE POWER SUPPLY CONNECTIONS AS SHOWN BELOW.

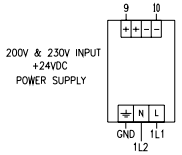

309EBE546-C
(Ref. Drawing)
Page 2 of 2

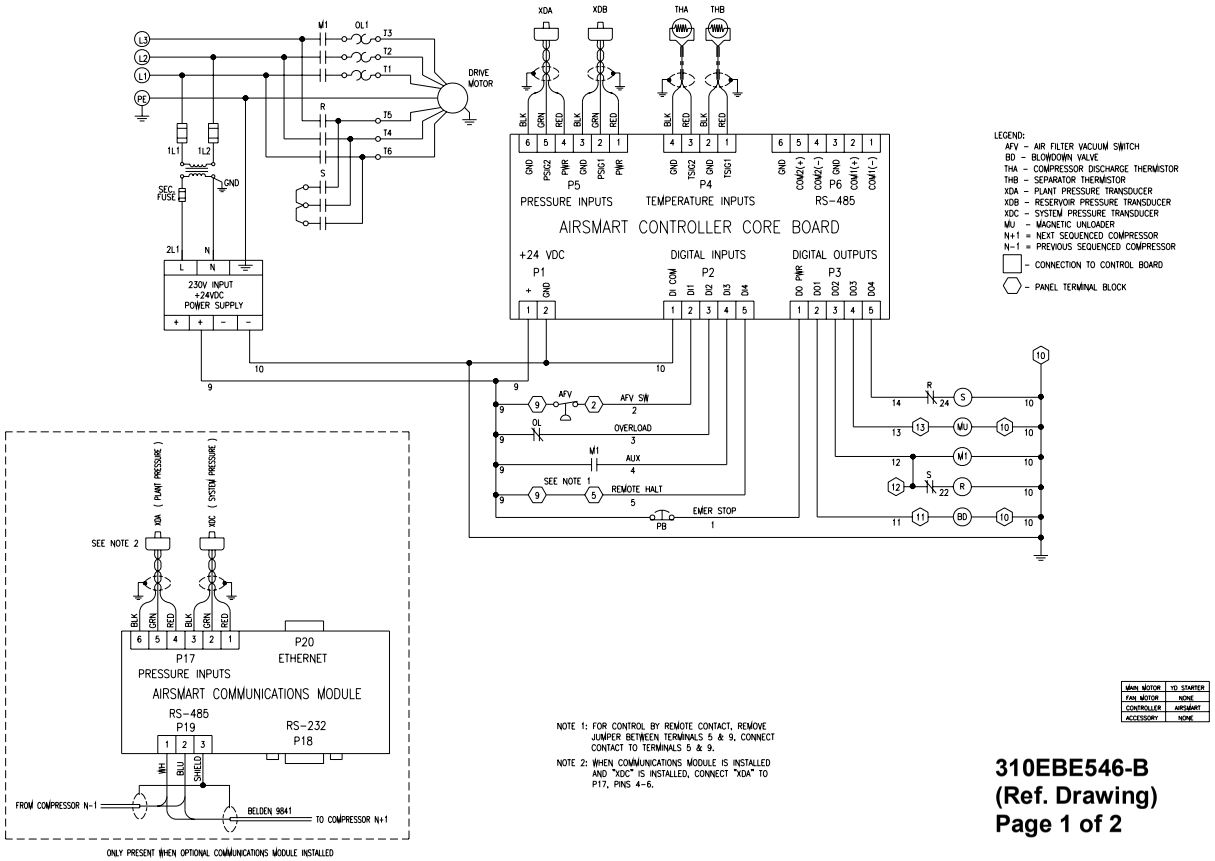

Figure 4-7 – WIRING DIAGRAM – WYE DELTA (575 VOLT)

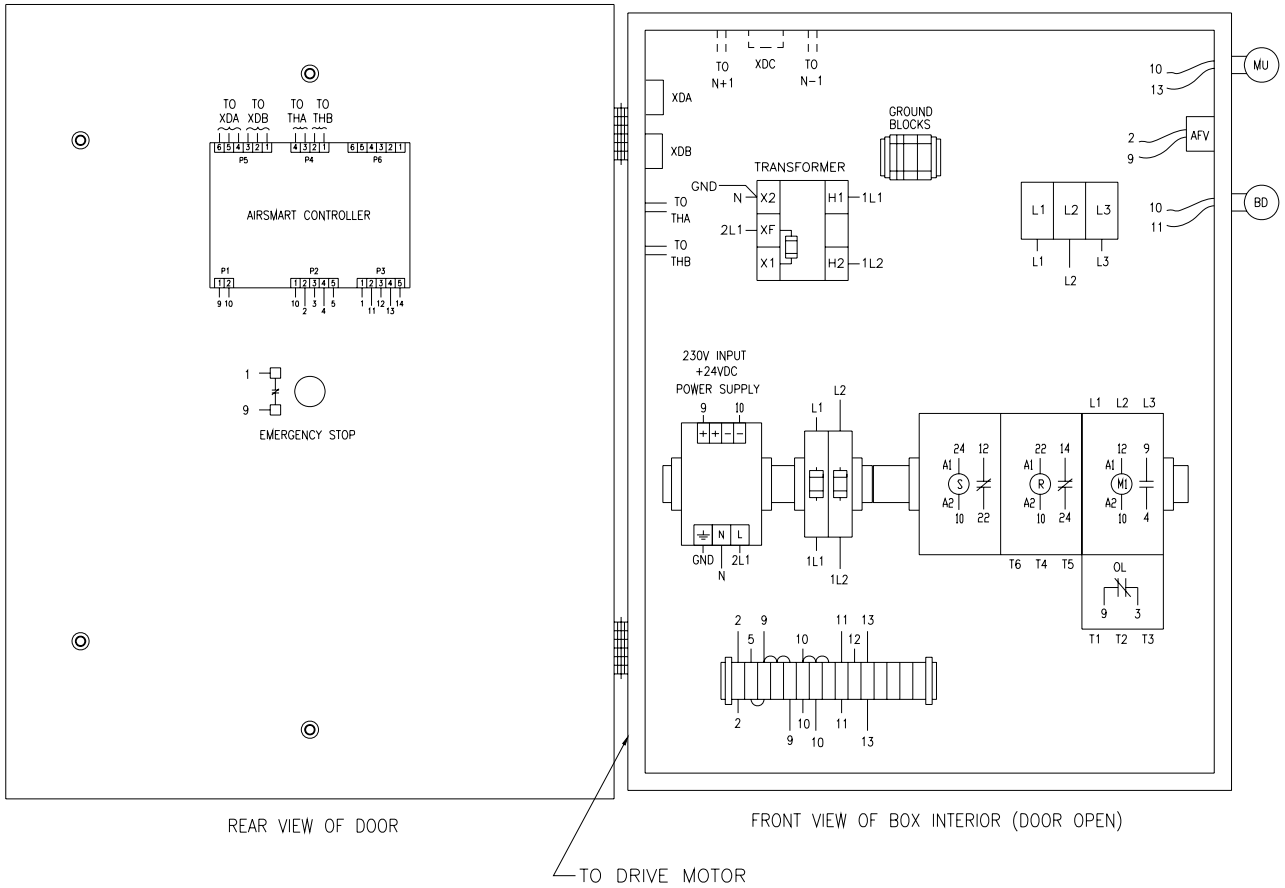

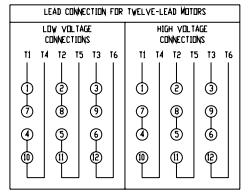

310EBE546-B
(Ref. Drawing)
Page 2 of 2

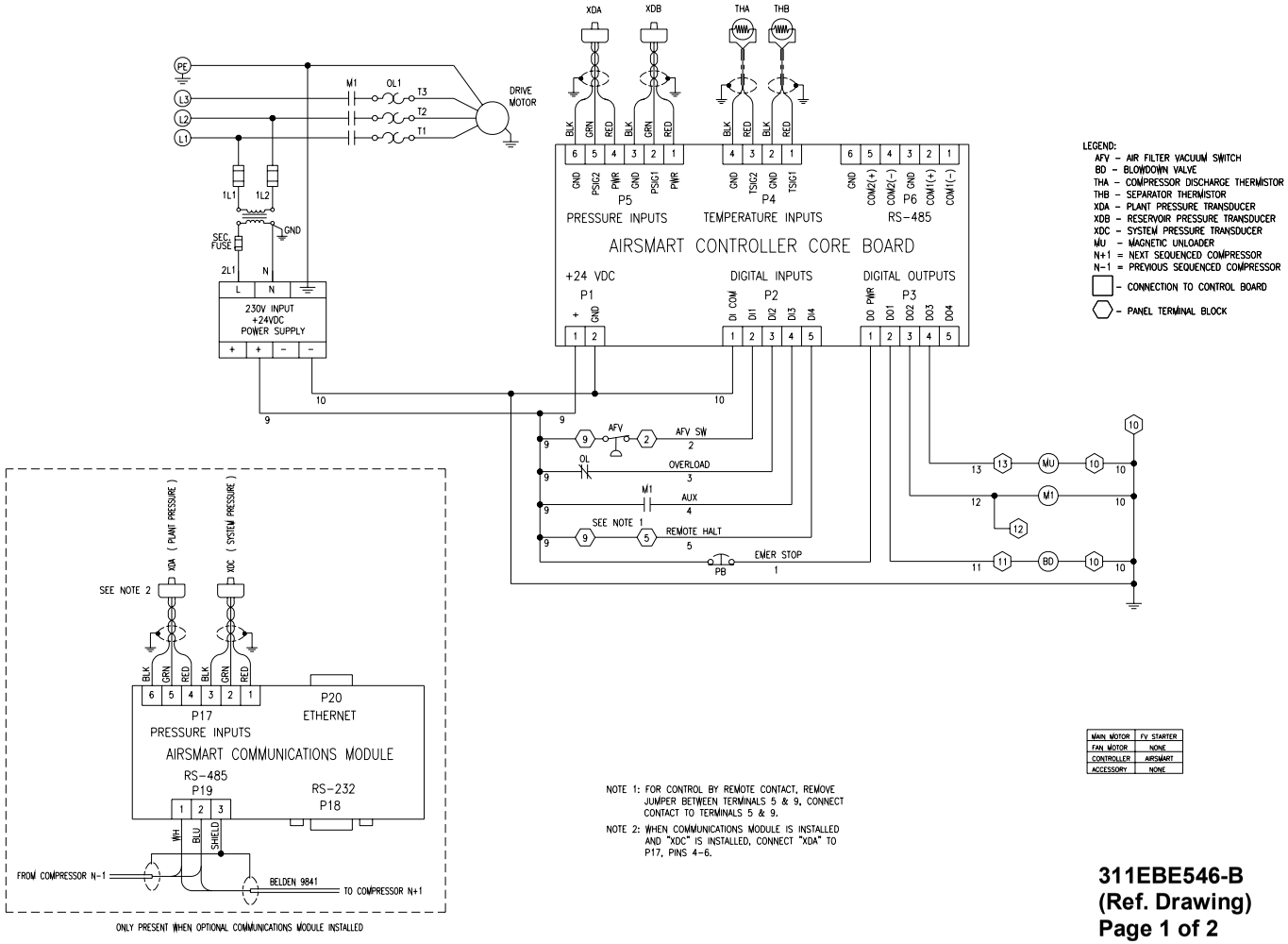

Figure 4-8 – WIRING DIAGRAM – FULL VOLTAGE (575 VOLT)

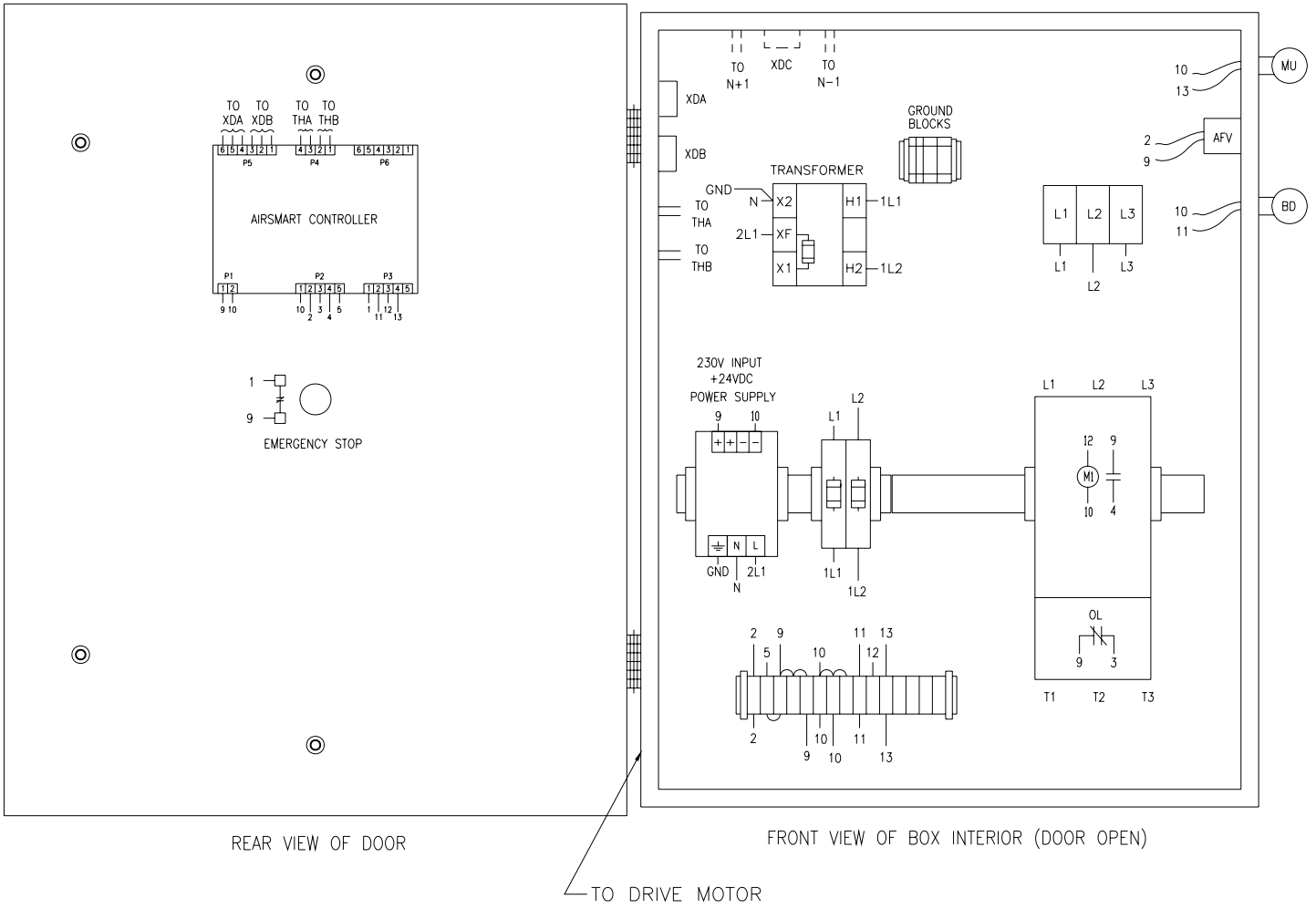

311EBE546-B
(Ref. Drawing)
Page 2 of 2

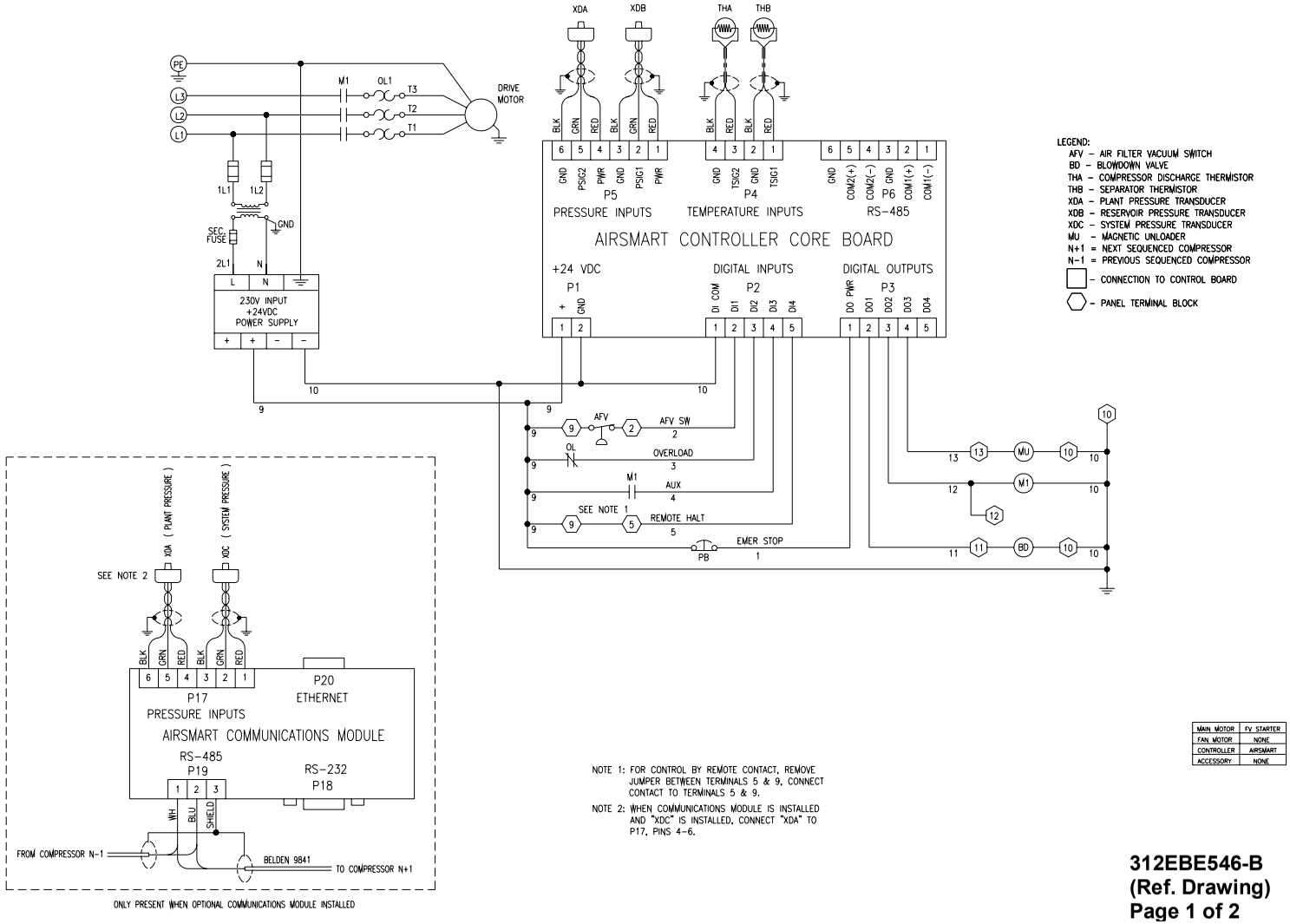

Figure 4-9 – WIRING DIAGRAM – LESS STARTER (575 VOLT)

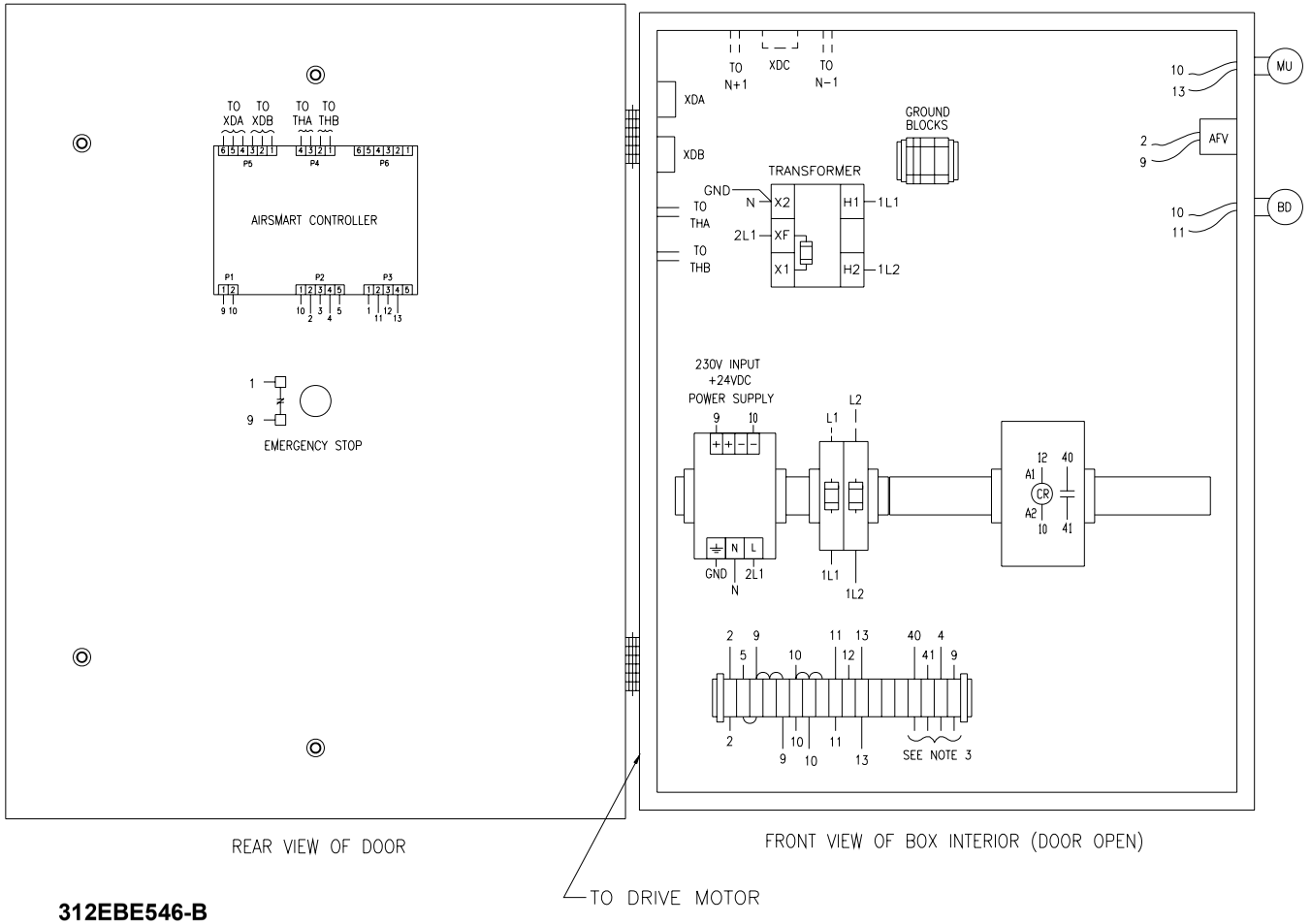

312EBE546-B
(Ref. Drawing)
Page 2 of 2

SECTION 5
LUBRICATION
OIL COOLER, OIL FILTER & SEPARATOR

COMPRESSOR OIL SYSTEM (Figure 5-1) The compressor oil system cools the compressor, lubricates moving parts and seals internal clearances in the compression chamber.

Air pressure in the oil reservoir forces oil through the oil cooler, thermostatic mixing valve, oil filter and into the compressor main oil gallery.

The oil passes through internal passages for lubrication, cooling and sealing. The air-oil mixture is then discharged to the oil reservoir where a large part of the entrained oil drops out of the air stream. The remaining mixture then passes through the final oil separator where most of the remaining oil is removed. The air then passes to the aftercooler. The oil separated from the air is sent to the oil cooler and recirculated throughout the system. Oil separated at the air/oil separator is sent via an oil return line through an orifice and back into the compressor.

RECOMMENDED LUBRICANT - Gardner Denver compressors are factory filled with AEON lubricants. These lubricants are formulated to the highest quality standards and are factory authorized, tested and approved for use in rotary screw compressors. AEON lubricants are available through your authorized Gardner Denver compressor distributor.

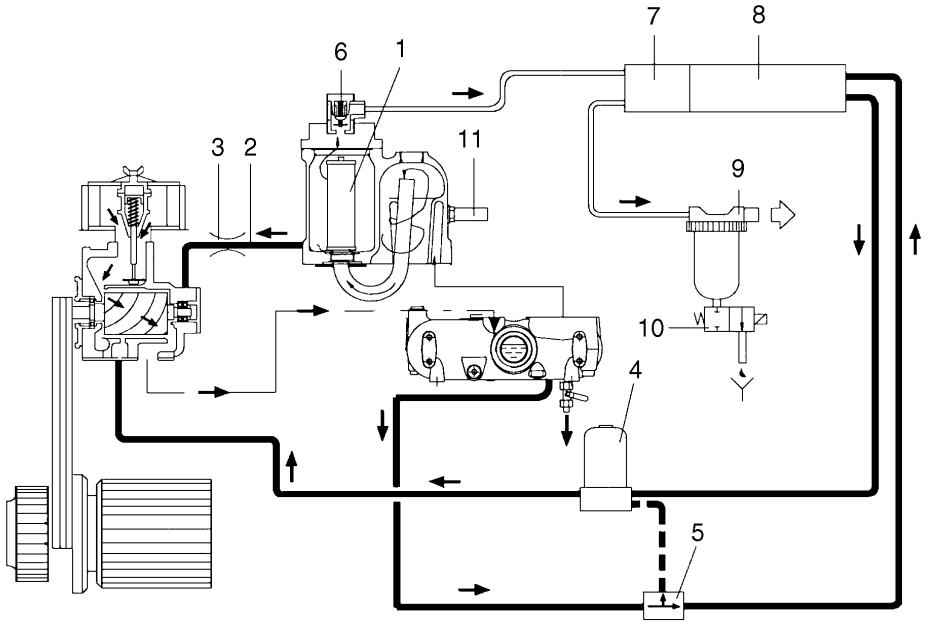

Ref. No.	Description
1	Air/oil Separators
2	Oil Scavenge Line
3	Orifice
4	Oil Filter
5	Thermostatic Mixing Valve
6	Minimum Pressure/Check Valve
7	Aftercooler
8	Oil Cooler
9	Moisture Separator
10	Electronic Drain
11	Pressure Relief Valve

Figure 5-1 – FLOW DIAGRAM

OIL SPECIFICATIONS - The recommended compressor lubricant is Gardner Denver AEON 4000 Lubricating Coolant which can be used for year-round operation except as noted in the “High Temperature Operation” paragraph, page 45, or low temperature, see “Installation for Cold Weather Operation,” page 16. AEON 4000 Lubricating Coolant is a superior petroleum base lubricant formulated and containing additives for use in Gardner Denver compressors.

CAUTION

Specific AEON™ lubricants are recommended for use in this equipment. Other lubricants may cause excessive carryover or compressor damage. Do not mix different types of lubricants or use inferior lubricants. Check the decal on the oil reservoir for lubricating coolant specification.

HIGH TEMPERATURE OPERATION - If the discharge temperature is sustained between 200-210° F. for a period of more than four (4) hours due to continuing high ambient air temperature, use Gardner Denver AEON 9000SP Lubricating Coolant which is a superior synthetic lubricant. Short periods of up to four (4) hours of sustained discharge temperatures up to 210° F. do not require a change from the recommended year-round lubricant AEON 4000.

COLD AMBIENT OPERATION - See "Installation for Cold Weather Operation," page 16 and Figure 2-3, page 15.

PROCEDURE FOR CHECKING OIL LEVEL (Figure 5-4, page 50) - Check the oil level when the compressor is shutdown and the oil/air mixture has separated. The oil should be visible between the min. and max. range, shown in Figure 5-4, page 50. If the oil level is above the max. range, the oil must be drained. If the oil level is below the min. range, oil must be added.

ADDITION OF OIL BETWEEN CHANGES - Oil must be added when the oil level is below the min. range on the oil gauge. The oil must be checked with the machine shutdown, blowndown and the air/oil mixture settled out to air and oil.

DANGER

Air/oil under pressure will cause severe personal injury or death. Shut down compressor, relieve system of all pressure, disconnect, lockout and tagout power supply to the starter before removing valves, caps, plugs, fittings, bolts and filters.

DANGER

Compressor, air/oil reservoir, separation chamber and all piping and tubing may be at high temperature during and after operation.

CAUTION

Excessive oil carryover can damage equipment. Never fill oil reservoir above the max. range of the gauge.

To add oil, follow these steps:

1. Be sure the unit is completely off and that no air pressure is in the oil reservoir.

2. Disconnect, lockout and tagout the power supply to the starter.

3. Wipe away all dirt around the oil filler plug. It is located by the oil filter.

4. Remove the oil filler plug and add oil as required to return the oil level to the max. line on the site glass.

5. Install the oil filler plug, run and check for leaks.

DO NOT OVERFILL. The quantity required to raise the oil level from the min. line to the max. line, (See Figure 5-4, page 50), is two (2) quarts (Figure 5-2, page 46). Repeated addition of oil between oil changes may indicate excessive oil carryover and should be investigated.

Use only CLEAN containers and funnels so no dirt enters the reservoir. Provide for clean storage of oils. Changing the oil will be of little benefit if done in a careless manner.

	20 to 30 HP (15 – 22 kW)
Refill Capacity For Normal Oil Change	2.00 U. S. Gallons (8.5 Liters)
Bottom of Site Glass to Top of Site Glass	2 U. S. Quart (2 Liters)

Figure 5-2 – APPROXIMATE OIL SYSTEM CAPACITIES

OIL CHANGE INTERVAL - Recommended oil change intervals are based on oil temperature. Figure 5-3, shows how the change interval is affected by temperature.

When operating conditions are severe (very dusty, high humidity, etc.), it will be necessary to change the oil more frequently. Operating conditions and the appearance of the drained oil must be surveyed and the oil change intervals planned accordingly by the user. Gardner Denver offers a free oil analysis program with the AEON lubricants and we recommend a sample be sent in at 100 hours on a new unit.

Discharge Temperature	AEON™ 4000 Change Interval	AEON™ 9000SP Change Interval
Up to 180° F (82° C)	4000 hrs.	8000 hrs.
180° F to 190° F (82° C to 88° C)	3000 hrs.	6000 hrs.
190° F to 200° F (88° C to 93° C)	2000 hrs.	4000 hrs.
200° F+ (93° C)	1000 hrs.	2000 hrs.

Figure 5-3 – OIL CHANGE INTERVAL

DRAINING AND CLEANING OIL SYSTEM

DANGER

Air/oil under pressure will cause severe personal injury or death. Shut down compressor, relieve system of all pressure, disconnect, lockout and tagout power supply to the starter before removing valves, caps, plugs, fittings, bolts and filters.

Always drain the complete system. Draining when the oil is hot will help to prevent varnish deposits and carry away impurities.

To drain the system:

1. Be sure the unit is completely off and that no air pressure is in the air/oil reservoir.
2. Disconnect, lockout and tagout the power supply to the starter.
3. Stick the end of the drain tube into a suitable container, such as a 5 gallon pail.
4. Open the drain valve and allow oil to drain out of the air/oil reservoir.
5. Close the drain valve.

If the drained oil and/or the oil filter element are contaminated with dirt, flush the entire system: the reservoir, oil cooler and lines. Inspect the air/oil separator element for dirt accumulation; replace if necessary. If a varnish deposit exists, contact the factory for recommendations for removal of the deposit and prevention of varnish.

FILLING OIL RESERVOIR

DANGER

Air/oil under pressure will cause severe personal injury or death. Shut down compressor, relieve system of all pressure, disconnect, lockout and tagout power supply to the starter before removing valves, caps, plugs, fittings, bolts and filters.

DANGER

Compressor, air/oil reservoir, separation chamber and all piping and tubing may be at high temperature during and after operation.

1. Be sure the unit is completely off and that no air pressure is in the oil reservoir.
2. Disconnect, lockout and tagout the power supply to the starter.

3. Wipe away all dirt around the oil filler plug.

4. Remove the oil filler plug and add oil as required to return the oil level to the max. range on the oil gauge.

5. Install the oil filler plug and operate the unit for about a minute allowing oil to fill all areas of the system. Check for leaks.

6. Shut down unit, allowing the oil to settle, and be certain all pressure is relieved.

7. Add oil, if necessary, to bring level to the max. range on the oil level gauge (Figure 5-4, page 50).

DO NOT OVERFILL as oil carryover will result. The quantity of oil required to raise the oil level from the min. range to the max range on the site glass is shown in Figure 5-2, page 46. Repeated addition of oil between oil changes may indicate excessive oil carryover and should be investigated.

Use only CLEAN containers and funnels so no dirt enters the reservoir. Provide for clean storage of oils. Changing the oil will be of little benefit if done in a careless manner.

CAUTION

Excessive oil carryover can damage equipment. Never fill oil reservoir above the top of the site glass.

LUBRICANT UPGRADE PROCEDURE - Upgrading to a longer life lubricant is essentially a very worthwhile practice. The following are the primary steps to be completed when upgrading or changing the type of lubricant.

CAUTION

Improper equipment maintenance with use of synthetic lubricants will damage equipment. Oil filter and oil separator change intervals remain the same as for AEON 4000 -- See Maintenance Schedule, Page 60 .

DANGER

Air/oil under pressure will cause severe personal injury or death. Shut down compressor, relieve system of all pressure, disconnect, lockout and tagout power supply to the starter before removing valves, caps, plugs, fittings, bolts and filters.

WARNING

High temperature operation can cause damage to equipment or personal injury. Do not repeatedly restart the unit after high temperature stops operation. Find and correct the malfunction before resuming operation.

⚠ WARNING

All materials used in Gardner Denver® compressor units are compatible with AEON 9000SP Lubricating Coolant. Use caution when selecting downstream components such as air line lubricating bowls, gaskets and valve trim.

AEON 9000SP Synthetic Lubricant is not compatible with low nitrile Buna N or acrylic paints. AEON 9000SP is compatible with most air system downstream components.

1. Be sure the unit is completely off and that no air pressure is in the air/oil reservoir.

2. Disconnect, tag and lock out the power supply to the starter.

3. Thoroughly drain system:
   - Drain oil from airend and cooler while hot.
   - Break low point connections and drain oil from pipe runs.
   - Dump Oil from filter and reinstall used filter.

4. Fill system with a 50 percent charge of the new lubricant:
   - Start the machine and stay there to observe.
   - Allow the machine to run about five minutes at temperature, or until temperature stabilizes, then shut down

5. Thoroughly drain machine.

6. Change to a new filter and separator.

7. Fill system with a full charge of the new lubricant.

8. Machine should then be run normally; however, total run time after the initial changeouts should be 50 percent of normal anticipated service life of the new lubricant.
   - Drain all lubricant from system, change filter and separator, and replace with full charge of the new lubricant.

9. Subsequent lubricant changeouts should be at normal intervals. (See “Oil Change Interval” and chart, page 46.

Material Safety Data Sheets (MSDS) are available for all AEON lubricants from your authorized Gardner Denver distributor or by calling (901) 542-6100.

OIL LEVEL GAUGE (Figure 5-4, page 50) - The oil level gauge indicates the amount of oil in the air/oil reservoir. Read oil level only when the unit is shut down and the air/oil mixture has separated. Add oil only when the oil level is below the min. range on the site glass. Drain oil only when the oil level is above the max. range on the site glass.

Ref. No.	Name
1	Oil Fill
2	Pressure Relief Valve
3	Oil Drain

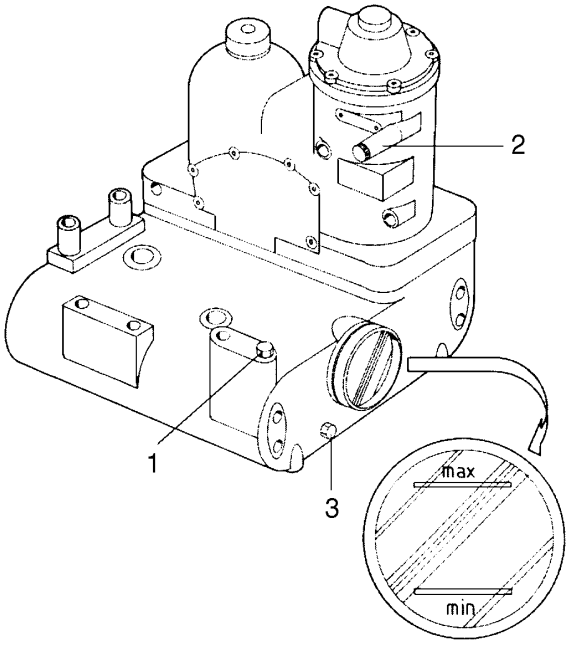

Figure 5-4 – OIL LEVEL GAUGE, OIL FILL AND OIL DRAIN

MOISTURE IN THE OIL SYSTEM - In normal humidity and with normal operating temperatures and pressures, the thermal mixing valve controls the oil temperature and prevents moisture contamination of the oil. Unusual cooling of the oil reservoir, short loaded cycle in high humidity or malfunctions of the thermal valve may result in moisture in the oil system which is detrimental to compressor lubrication and could cause oil carryover. If moisture is observed in the oil reservoir, drain the moisture and correct the condition causing the accumulation.

See “Compressor Oil System Check”, page 54 and “Thermal Control Valve", page 52.

COMPRESSOR OIL FILTER (Figure 1-2, page 8 and Figure 5-5, page 51) - This replaceable element filter is a vital part in maintaining a trouble-free compressor, since it removes dirt and abrasives from the circulated oil.

CAUTION

Improper oil filter maintenance will cause damage to equipment. Replace filter element every 1000 hours of operation. More frequent replacement could be required depending on operating conditions. A filter element left in service too long may damage equipment.

Use only the replacement element shown on the filter tag or refer to the parts list for the part number. Use the following procedure to replace the filter element. Do not disturb the piping.

DANGER

Air/oil under pressure will cause severe personal injury or death. Shut down compressor, relieve system of all pressure, disconnect, lockout and tagout power supply to the starter before removing valves, caps, plugs, fittings, bolts and filters.

DANGER

Compressor, air/oil reservoir, separation chamber and all piping and tubing may be at high temperature during and after operation.

1. Stop unit and be sure no air pressure is in the oil reservoir.
2. Disconnect, tag and lock out the power supply to the starter.
3. Remove the spin-on element.
4. Clean the gasket face of the filter body.
5. Coat the new element gasket with clean lubricant used in the unit.
6. Screw new element on filter body and tighten clockwise by hand 3/4 turn after contact. DO NOT OVERTIGHTEN ELEMENT.
7. Reset the filter life setting to 1000 hours, see “Maintenance Adjustments” in Controller Operating and Service Manual.
8. Run the unit and check for leaks.

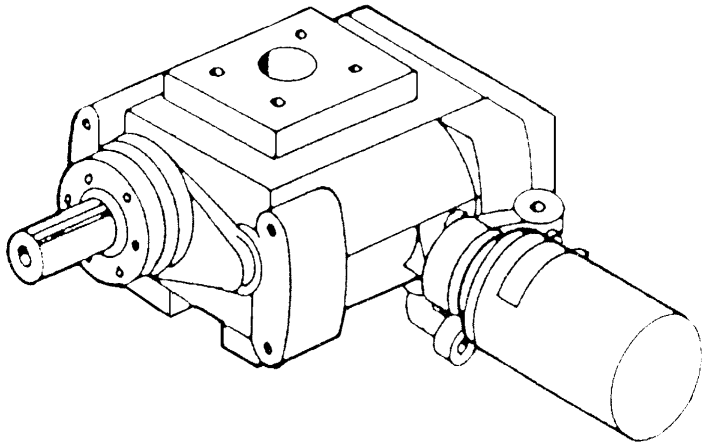

Figure 5-5 – OIL FILTER

COMPRESSOR OIL COOLER - The cooler fan is mounted on the compressor motor shaft; air is exhausted through the oil cooler and away from the unit. Do not obstruct air flow to and from the oil cooler. Allow a minimum of two (2) feet (.6M) clearance around the cooler. Keep both faces of the cooler core clean for efficient cooling of compressor oil.

THERMAL CONTROL (THERMOSTATIC MIXING) VALVE (Figure 5-1 page 44) - is installed in the system. This valve is used to control the temperature of the oil. On start-up with unit cold, the element is open to bypass, allowing oil to pass directly from the reservoir to the compressor during warm-up. As oil warms, the element gradually closes to the bypass allowing more of the oil from the cooler to mix with oil from the bypass.

After the unit is warmed up, the mixing valve maintains oil injection temperature into the compressor at a minimum of 150° F (66° C). This system provides proper compressor warm-up and prevents moisture contamination of the oil.

To check the element, heat it in oil - it should be fully extended at 150° F (66° C). If the unit shuts down due to high air discharge temperature, the cause may be that the element is stuck open to the bypass. When flushing the oil system, remove the mixing valve and clean all parts thoroughly.

OIL RESERVOIR - The oil reservoir-separator combines multiple functions into one vessel. The lower half is the oil reservoir, providing oil storage capacity for the system and the top portion, a primary oil separation means. The reservoir also provides limited air storage for control and gauge actuation.

COMPRESSOR AIR/OIL SEPARATOR (Figure 5-6, page 54) - Located in a separate housing, consists of a renewable cartridge-type separator element and provides the final removal of oil from the air stream.

Oil impinging on the inside of the separator element drains directly back into the oil reservoir by gravity. Oil collected outside the element is returned through tubing to the compressor cylinder.

Oil carryover through the service lines may be caused by a faulty oil separator, overfilling of the oil reservoir, oil that foams, oil return line malfunction, or water condensate in the oil. If oil carryover occurs, inspect the separator only after it is determined that the oil level is not too high, the oil is not foaming excessively, the oil return tube from the bottom of the separator to the compressor cylinder is not clogged or pinched off, the check valve in the oil return is functioning properly, and there is not water or an oil/water emulsion in the oil.

Oil carryover malfunctions of the oil separator are usually due to using elements too long, heavy dirt or varnish deposits caused by inadequate air filter service, use of improper oil, or using oil too long for existing conditions. Excessive tilt angle of the unit will also hamper separation and cause oil carryover.

Oil separator element life cannot be predicted; it will vary greatly depending on the conditions of operation, the quality of the oil used and the maintenance of the oil and air filters. The condition of the separator can be determined by pressure differential or by inspection.

Pressure Differential Gauging – The “CHANGE SEPARATOR” advisory will flash when the pressure differential across the oil separator reaches approximately 8 psid (.55 bar). Replace the oil separator element at this time. If ignored, the unit will shutdown and the advisory will illuminate steadily when the pressure differential reaches 15 psid (1 bar).

CAUTION

Using an oil separator element at excessive pressure differential can cause damage to equipment. Replace the separator when the differential pressure is greater than 8 psi or every 4,000 hours (at least once a year).

NOTICE

A sudden drop of zero pressure differential or sudden heavy oil carryover may indicate a ruptured element.

Inspection - After removal of separator element, shine a light inside the element to reveal areas of heavy dirt or varnish deposits or breaks (ruptures) in element media.

Removal of Oil Separator For Inspection or Replacement:

DANGER

Air/oil under pressure will cause severe personal injury or death. Shut down compressor, relieve system of all pressure, disconnect, lockout and tagout power supply to the starter before removing valves, caps, plugs, fittings, bolts and filters.

DANGER

Compressor, air/oil reservoir, separation chamber and all piping and tubing may be at high temperature during and after operation.

1. Be certain the unit is off and that no air pressure is in the oil reservoir. The compressor package will automatically blowdown in about 2 minutes.
2. Close the air service valve located after the compressor package discharge.
3. Disconnect, lockout and tagout the power supply to the starter.
4. Remove the minimum pressure/check valve, see Item 1, Figure 5-6, page 54 (air/oil separator housing) cover.
5. Lift out the air/oil separator element. See Item 2, Figure 5-6, page 54.
6. Inspect and/or replace the separator as necessary.
7. Clean the sealing surfaces on the air/oil separator and the minimum pressure/check valve.
8. Clean the orifice, Item 3, Figure 5-6, page 54, in the oil return line, the strainer, Item 4, Figure 5-6, page 54, in the oil return line, and if necessary, the air/oil separator housing.
9. Grease the O-Ring on the separator element and install the separator into the housing.
10. Replace the O-Ring, Item 5, Figure 5-6, page 54, between the minimum pressure/check valve and the air/oil separator housing.
11. Replace the sealing kit in the minimum pressure/check valve. After the assembling of the valve, leave about .08 inch gap between the nut, Item 6, Figure 5-6, page 54, and the cover of the valve. See “Changing Minimum Pressure/Check Valve Seals,” Section 4, page 29.

12. Install the minimum pressure/check valve assembly and tighten the bolts alternately for even tightness.

13. Open the air service valve.

14. Run the unit and check for leaks.

COMPRESSOR OIL SYSTEM CHECK - The following readings are based on ambient temperature of 80° F (27° C) with the system in good condition. The compressor should be at operating temperature at the time of the checks. One-half hour of loaded operation is usually sufficient to reach level-out operating temperatures.

Air and Oil Discharge Temperature - 160° F to 180° F (71°C to 82° C) - Check with a thermometer at the discharge housing.

Compressor Oil Inlet Temperature - 150° F to 165° F (66° C to 74° C) - Install a tee at the oil filter outlet and check with a thermometer.

Oil Inlet Pressure - Check at the fitting in the line near the compressor oil inlet. With air receiver pressure at 100 psi (6.9 Bar), oil inlet pressure should be 80 to 90 psig (5.5 to 6.2 Bar).

Oil Cooler Oil Pressure Differential (Air-Cooled Radiator) - Check differential across the oil system by measuring oil inlet pressure as described above.

Oil Cooler Temperature Differential (Air-Cooled Radiator) - The oil temperature differential depends on the temperature of the air at the oil cooler fan and cleanliness of the core faces. As ambient temperatures and core restrictions increase, the oil cooler outlet temperature will increase. The oil inlet temperature is approximately the same as the air discharge temperature.

Ref. No.	Description
1	Minimum Pressure/Check Valve
2	Air/Oil Separator Element
3	Oil Scavenge Line Orifices
4	Oil Scavenge Line Strainer
5	O-Ring
6	Minimum Pressure/Check Valve Adjusting Nut

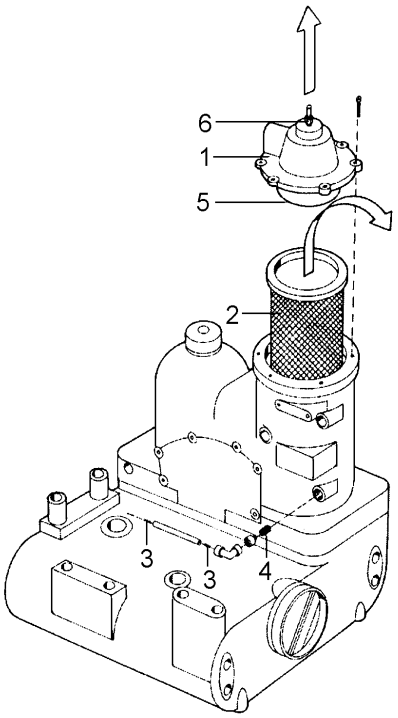

Figure 5-6 – OIL SEPARATOR

SECTION 6
AIR FILTER

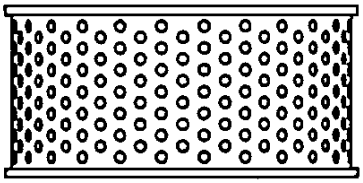

Figure 6-1 – AIR FILTER

STANDARD DUTY AIR FILTER (Figure 6-1) - Replacement instructions are given in the following sections:

DANGER

Compressor, air/oil reservoir, separation chamber and all piping and tubing may be at high temperature during and after operation.

WARNING

The air filter element can not be cleaned or reused.

Filter Element - The element should be replaced when inspection indicates an accumulation of dirt on the outside of the element. Inspect every few days until experience determines the proper time interval for servicing.

To Service:

1. Be certain the unit is off and that no air pressure is in the air/oil reservoir. The compressor package will automatically blow down in about 2 minutes.
2. Close the air service valve located after the compressor package discharge.
3. Disconnect, lockout and tagout the power supply to the starter.
4. Remove the air filter cover (Figure 6-1).
5. Clean the inside of the air filter housing.
6. Install new air filter element and the air filter cover.
7. Open the air service valve.

Filter Element Life - The element should be replaced if visual inspection indicates an accumulation of dirt, or a rupture, crack or pin holes in the pleated media. Inspection should be done by placing a bright light inside the element.

⚠ WARNING

Do not oil this element. Never operate unit without element. Never use elements that are damaged or ruptured. Never use elements that won't seal. Keep spare elements on hand to reduce downtime. Store elements in a protected area free from damage, dirt and moisture. Handle filter parts with care.

SECTION 7
BELT DRIVE

Proper drive belt tension and alignment are provided at the factory, however, good practice dictates checking the drive alignment and tension after shipment and before initial start-up.

Sheaves should align straight across the front with a straight edge. The best tension is just enough tension to keep belts from “squealing” on start-up.

CAUTION

Excessive belt tension can damage the equipment. Tension the belts as shown in Figure 7-1, page 59.

REPLACING THE COMPRESSOR BELTS

1. Disconnect, lockout and tagout the power supply to the starter.
2. Remove the belt guards.
3. Using adjusting screws, jack the motor base up to loosen the belt tension. Remove the belts.
4. Install new belts, tighten belts using the adjust screws. Check for correct belt tension.
5. Check sheave alignment. (See “SHEAVE ALIGNMENT”).
6. Assemble the guards.

SHEAVE ALIGNMENT

The sheave alignment and belt tightening system consists of a hinged plate for the motor which is supported between (2) posts and a slotted platform for the Tempest units. To achieve proper sheave alignment the sheaves must be adjusted for both parallel and angular alignment. The alignment between the motor and air-end sheaves should be confirmed with the use of a straight edge. If the sheaves are properly aligned, the straight edge should touch the two outer edges of each sheave for a total of four points of contact. Gaps between the outer edges of either of the sheaves and the straight edge indicate sheave misalignment.

The airend sheave is set in the parallel and angular direction by mounting it on the air-end shaft that is part of the Tempest unit that is bolted to the platform. The platform has been set in the parallel and angular directions by its inherent design. The motor sheave is set in the parallel direction by sliding it on the motor shaft to position it in line with the airend sheave. (Check for alignment with straight edge.) **Note**: It may be necessary to loosen the Tempest unit and slide it in the platform mounting slots to keep the motor sheave fan blades in the correct position in the cooler orifice ring.

The motor sheave is set in the angular direction by means of (2) jack bolts and the hinged plate. To start the angular alignment process check to make sure the locking nuts on the jack bolts are loose. The motor sheave can be aligned in the angular direction to the same plane as the airend sheave by turning down the jack bolts on one side or the other of the hinged plate. (Check for alignment with straight edge.) It also may be necessary to use the nuts that are on the jack bolts to push up on one side or the other of the hinged plate. **Note**: At this point it may also be necessary to make minor adjustments of the position of the sheave on the motor shaft to get proper alignment. Once proper alignment has been obtained, lock

the sheave in place on the motor shaft; then the jack bolt lock nuts must be tightened. One set of nuts is tightened down against the base to lock the jack bolts in place. The second set is locked down to sandwich the hinged plate against the jack bolt heads. When lock nuts are in place, a final alignment check should be made with the straight edge.

Note: Any of the following actions will require the sheave alignment be checked and any or all of the above steps repeated. (Initial start up at customer site, compressor change, motor change, unit relocation, or when the belts are replaced.)

It's important to note that the belts should not be over tightened. To check belt tension use a Gardner Denver Belt Tension Gauge, Part Number 00543217. V-belt tension will drop after the first 8-24 hrs of unit run time. Failure to check and re-tension the belts after the initial run-in period will result in belt slippage and premature belt failure. Please see Figure 7-1, page 59, for proper belt tension.

CAUTION

Interference between the fan and the orifice can damage equipment. Be certain the orifice has even clearance around the fan before starting the unit.

REPLACING THE COMPRESSOR SHEAVE

1. Disconnect, lockout and tagout the power supply to the starter.
2. Remove the guards.
3. Using the adjusting screws, jack the motor base up to loosen the belt tension, Remove the belts.
4. Remove bolts from tapered bushing.
5. Pull the sheave off the rotor shaft with a gear puller, if necessary.
6. Install new sheave and tapered bushing.
7. Install new belts. Check for correct belt tension and reattach the wire guard.
8. Align sheaves with a straight edge. (See "SHEAVE ALIGNMENT", page 57).
9. Assemble the guards.

CHECKING BELT TENSION - Using a spring scale, apply a perpendicular force to each belt at the midpoint of the span and measure the deflection. Correct deflection force and deflection are shown in Figure 7-1. To tighten belts, merely increase the center distance.

NOTICE

When a new set of belts is installed on a drive, the initial deflection force should be 1/3 greater than shown in Figure 7-1. Recheck tension frequently during the first 24 hours of operation

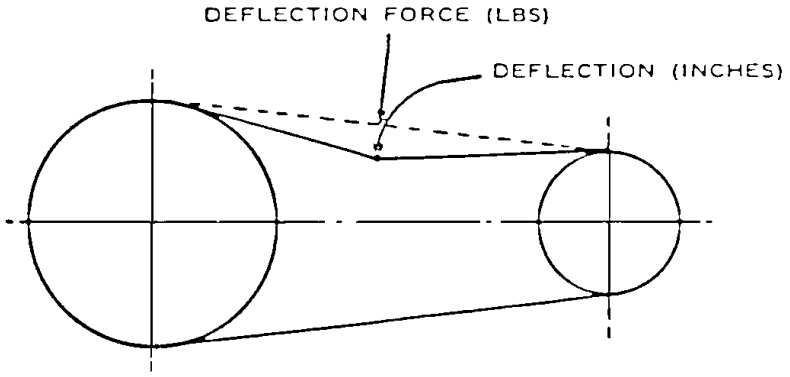

Motor H.P.	No. of Belts	Deflection Force Pounds	Deflection In Inches
20	4	6 – 8.5	3/8
25	4	6 – 8.5	3/8
30	4	6 – 8.5	3/8

Figure 7-1 – BELT TENSION – J SECTION MICRO-V BELTS

SECTION 8
MAINTENANCE SCHEDULE

SERVICE CHECK LIST –

Air Filter - Operating conditions determine frequency of service. See "Air Filter," SECTION 6, page 55.

Motor Lubrication - Refer to SECTION 2, page 18.

Every 8 Hours Operation

1. Check the reservoir oil level - add oil if required. See SECTION 5, page 44. If oil consumption is high, refer to "Excessive Oil Consumption," page 63.

2. Observe if the unit loads and unloads properly.

3. Check discharge pressure and temperature.

Every 125 Hours Operation

1. Check for dirt accumulation on oil/aftercooler core faces and the cooling fan. If cleaning is required, clean the exterior fin surfaces of the cores by blowing compressed air carrying a nonflammable safety solvent in a direction opposite that of the cooling fan air flow. This cleaning operation will keep the exterior cooling surfaces clean and ensure effective heat dissipation.

Every 1000 Hours Operation

1. Change oil filter element.

Every 4000 Hours Operation

1. Change the compressor lubricant. UNDER ADVERSE CONDITIONS, CHANGE MORE FREQUENTLY (refer to "Oil Change Interval", Figure 5-3, page 46). Flush system if required.

Every Year

1. Check the relief valve for proper operation. See Section 4, page 25.

2. Change oil separator, see "Removal of Oil Separator for Inspection or Replacment", Section 5, page 44, for further details (or when 8 psid pressure differential across the element).

MAINTENANCE SCHEDULE (See Detail Notes above)

Maintenance Action	As Indicated by AirSmart Controller	Every 8 Hours	Every 125 Hours	Every 1000 Hours	Every 4000 Hours	Every Year
Check/Change Air Filter	•					
Change Oil Separator	•					•
Check Reservoir Oil Level **		•				
Check for Proper Load/Unload		•				
Check Dirt Accumulation on Cooler			•			
Change Oil Filter Element & Clean Oil Return Strainer				•		
Change Compressor Lubricant (AEON 4000) *					•	
Check Relief Valve						•
Check Condition of Hoses					•	•
Check Operation of Condensate Removal Solenoid Valve		•				
Change Inlet Valve Seals						•

* See “Oil Change Interval Chart”, Figure 5-3, page 46, for specific lubricant life.

** Must be checked when the compressor is stopped and the air/oil mixture is separated.

SECTION 9
TROUBLESHOOTING

SYMPTOM		POSSIBLE CAUSE		REMEDY
Compressor fails to start	1.	Wrong lead connections.	1.	Change leads.
	2.	Blown fuses in control box.	2.	Replace fuse.
	3.	Motor starter overload heaters tripped .	3.	Reset and investigate cause of overload.
	4.	Pressure in reservoir.	4.	Inspect blowdown valve.
	5.	Emergency stop depressed.	5.	Release button.
Compressor starts but stops after a short time	1.	High discharge temperature.	1.	See “High Discharge Air Temperature,” this section.
	2.	High separator/ high compressor temperature light on.	2.	See “High Discharge Air Temperature”, this section.
	3.	Blown fuse in starter/ control box.	3.	Replace fuse (investigate if fuses continue to blow).
	4.	Motor starter overload heaters trip.	4.	Reset and investigate cause of overload.
Compressor does not unload (or load)	1.	Improperly adjusted control.	1.	Refer to Control Manual 13-17-600 and adjust control.
	2.	Air leak in control lines.	2.	Determine source of leak and correct.
	3.	Restricted control line.	3.	Clean control lines.
	4.	Faulty inlet valve solenoid.	4	Replace solenoid valve.
Compressor cycles from load to unload excessively	1.	Insufficient receiver capacity.	1.	Increase receiver size.
	2.	Restriction in service piping.	2.	Inspect and clean service piping.
	3.	Restriction in control tubing.	3.	Inspect and clean control tubing.
	4.	Plugged aftercooler.	4.	Inspect and clean aftercooler.
Compressor runs unloaded too often	1.	Volume of compressed air system too small.	1.	Check the volume of the piping and air receivers. An additional air receiver may be required.
	2.	Pressure range too narrow.	2.	Extend pressure range.

SYMPTOM		POSSIBLE CAUSE		REMEDY
Compressor starts too slowly	1.	Wye Delta switch time set too long.	1.	Contact your Gardner Denver distributor.
	2.	Minimum Pressure/Check Valve is faulty.	2.	Repair or replace.
	3.	Supply voltage is too low.	3.	Check the supply voltage.
Compressor is low on delivery and pressure	1.	Restricted air filter.	1.	Clean or replace filter.
	2.	Sticking inlet valve.	2.	Inspect and clean inlet valve.
	3.	Minimum pressure valve stuck closed.	3.	Replace valve.
	4.	Oil separator clogged.	4.	Replace.
	5.	Intervals of moisture separator drainage incorrectly set.	5.	Check the setting in the AirSmart controller.
	6.	Condensate drain solenoid valve is faulty.	6.	Replace.
	7.	Leaks in the compressed air system.	7.	Check for leaks, fix any leaks found.
	8.	V-Belts broken.	8.	Replace.
	9.	V-Belts slipping.	9.	Test belt tensioning.
	10.	Pressure limits incorrectly set.	10.	Check/correct pressure limits in the AirSmart Controller.
	11.	Aftercooler is frozen	11.	Thaw out. This machine cannot operate in temperatures below 32° F (0° C).
High discharge air temperature	1.	Dirty or clogged cooler face.	1.	Clean cooler.
	2.	Insufficient cooling air flow.	2.	Provide unrestricted supply of cooling air.
	3.	Clogged oil filter or cooler (interior).	3.	Replace filter or clean cooler.
	4.	Low compressor oil.	4.	Add oil to proper level.
	5.	Faulty temperature sensor.	5.	Replace sensor.
	6.	Thermostatic mixing valve stuck open.	6.	Repair or replace valve.
Excessive oil consumption	1.	Oil carryover through lines.	1.	See “Oil Carryover”, in this section.

SYMPTOM		POSSIBLE CAUSE		REMEDY
	2.	Oil leaks at all fittings and gaskets.	2.	Tighten or replace fittings or gaskets.
	3.	Shaft seal leaking.	3.	Replace shaft seal.
Oil carryover	1.	Overfilling the reservoir.	1.	Drain excess oil from system.
	2.	Clogged, broken or loose oil return lines.	2.	Tighten or replace faulty lines.
	3.	Ruptured oil separator element.	3.	Replace element.
	4.	Loose assembly.	4.	Tighten all fittings and gaskets.
	5.	Foam caused by use of incorrect oil.	5.	Use Gardner Denver AEON 2000, 4000 or 9000SP lubricating coolant.
	6.	Inoperative minimum pressure valve.	6.	Replace seals in valve.
	7.	Operation at elevated discharge temperatures.	7.	Reduce temperature. See “High Discharge Air Temperature”, this section.
	8.	Scavenge line check valve failure.	8.	Replace check valve.
	9.	Water condensate in oil.	9.	Check oil reservoir temperature and if low, change thermal mixing valve element to higher temperature.



DANGER

Air/oil under pressure will cause severe personal injury or death. Shut down compressor, relieve system of all pressure, disconnect, lockout and tagout power supply to the starter before removing valves, caps, plugs, fittings, bolts and filters

TROUBLESHOOTING VOLTAGE PROBLEMS

The compressor package has been designed, built, and tested to operate within one of the following standard ranges:

200-208 Volts, 60 Hertz

230-240 Volts, 60 Hertz

460-480 Volts, 60 Hertz

575-600 Volts, 60 Hertz

Connection to higher voltages will reduce the life of electrical devices within the compressor package. As voltages get further above the design range, other symptoms may show up.

High voltages may lead to high motor currents. The overload relay will sense these and shut down the compressor to protect the motor.

If the power supply and/or control transformer primary fuses blow, check that the devices are properly connected for the incoming line voltage.

Operation with lower voltages will reduce motor life and load capacity. As voltages get further below the design range, other symptoms may show up.

Low voltages may lead to high motor currents. The overload relay will sense these and shut down the compressor to protect the motor. If voltage is low while the compressor is off, locate and correct the cause. If the voltage drops low only while the compressor is running, look for poor connections or undersized wiring.

If any of the starters or contactors within the box chatter, or if the electronic controller drops out while attempting to start, it is a clear indication that the wiring is inadequate for the compressor. Look for poor connections or undersized wiring.

NOTICE
Gardner Denver factory remanufactured replacement compressor airend units are available from your authorized distributor, on an exchange basis, for all rotary screw compressor units.

WARRANTY
ROTARY SCREW COMPRESSORS AND VACUUM PACKAGES
OIL INJECTED – OIL FREE

GENERAL PROVISIONS AND LIMITATIONS
Gardner Denver (the "Company") warrants to each original retail purchaser ("Purchaser") of its new products from the Company or its authorized distributor that such products are, at the time of delivery to the Purchaser, made with good material and workmanship. No warranty is made with respect to:

1. Any product which has been repaired or altered in such a way, in the Company's judgment, as to affect the product adversely.

2. Any product which has, in the Company's judgment been subject to negligence, accident, improper storage, or improper installation or application.

3. Any product which has not been operated or maintained in accordance with the recommendations of the Company.

4. Components or accessories manufactured, warranted and/or serviced by others.

5. Any reconditioned or prior owned product.

Claims for items described in (4) above should be submitted directly to the manufacturer.

WARRANTY PERIOD
The Company's obligation under this warranty is limited to repairing or, at its option, replacing, during normal business hours at an authorized service facility of the Company, and part which in its judgment proved not to be as warranted within the applicable Warranty Period as follows.

AIRENDS
Airends, consisting of all parts within and including the cylinder and gear housing, are warranted for 24 months from date of initial use or 27 months from date of shipment to the purchaser, whichever occurs first.

Any disassembly or partial disassembly of the airend, or failure to return the "unopened" airend per Company instructions, will be cause for denial of warranty.

MAJOR PACKAGE COMPONENTS
Air or water cooled coolers and the AutoSentry Controllers are warranted for 24 months from date of initial use or 27 months from date of shipment to the first purchaser, whichever occurs first, as provided in, and subject to the terms of the original component manufacturer's warranty.

DRIVE AND FAN MOTOR
The drive and fan motor (if applicable) are warranted for 60 months from start-up or 63 months from shipment, whichever occurs first. The warranty is applicable only to Toshiba low voltage motors (600 Volts or less). High voltage motors and other manufacturer motors furnished due to customer request or special requirements carry the motor manufacturer's warranty.

OTHER COMPONENTS
All other components are warranted for 12 months from date of initial use or 15 months from date of shipment to first purchaser, whichever occurs first.

LABOR TRANSPORTATION AND INSPECTION
The Company will provide labor, by Company representative or authorized service personnel, for repair or replacement of any product or part thereof which in the Company's judgment is proved not to be as warranted. Labor shall be limited to the amount specified in the Company's labor rate schedule.

Labor costs in excess of the Company rate schedule amounts or labor provided by unauthorized service personnel is not provided for by this warranty.

All costs of transportation of product, labor or parts claimed not to be as warranted and, of repaired or replacement parts to or from such service facilities shall be borne by the Purchaser. The Company may require the return of any part claimed not to be as warranted to one of its facilities as designated by Company, transportation prepaid by Purchaser, to establish a claim under this warranty.

Replacement parts provided under the terms of the warranty are warranted for the remainder of the Warranty Period of the product upon which installed to the same extent as if such parts were original components.

DISCLAIMER
THE FOREGOING WARRANTY IS EXCLUSIVE AND IT IS EXPRESSLY AGREED THAT, EXCEPT AS TO TITLE, THE COMPANY MAKES NO OTHER WARRANTIES AND HEREBY EXPRESSLY DISCLAIMS ALL OTHER WARRANTIES, INCLUDING WITHOUT LIMITATION, EXPRESSED, IMPLIED OR STATUTORY WARRANTIES, INCLUDING ANY IMPLIED WARRANTY OF MERCHANTABILITY OR FITNESS FOR A PARTICULAR USE.

THE REMEDY PROVIDED UNDER THIS WARRANTY SHALL BE THE SOLE, EXCLUSIVE AND ONLY REMEDY AVAILABLE TO PURCHASER AND IN NO CASE SHALL THE COMPANY BE SUBJECT TO ANY OTHER OBLIGATIONS OR LIABILITIES. UNDER NO CIRCUMSTANCES SHALL THE COMPANY BE LIABLE FOR SPECIAL, INDIRECT, INCIDENTAL OR CONSEQUENTIAL DAMAGES, EXPENSES, LOSSES OR DELAYS HOWSOEVER CAUSED.

NO STATEMENT, REPRESENTATION, AGREEMENT, OR UNDERSTANDING, ORAL OR WRITTEN, MADE BY ANY AGENT, DISTRIBUTOR, REPRESENTATIVE, OR EMPLOYEE OF THE COMPANY WHICH IS NOT CONTAINED IN THIS WARRANTY WILL BE BINDING UPON THE COMPANY UNLESS MADE IN WRITING AND EXECUTED BY AN OFFICER OF THE COMPANY.

THIS WARRANTY SHALL NOT BE EFFECTIVE AS TO ANY CLAIM WHICH IS NOT PRESENTED WITHIN 30 DAYS AFTER THE DATE UPON WHICH THE PRODUCT IS CLAIMED NOT TO HAVE BEEN AS WARRANTED. ANY ACTION FOR BREACH OF THIS WARRANTY MUST BE COMMENCED WITHIN ONE YEAR AFTER THE DATE UPON WHICH THE CAUSE OF ACTION OCCURRED.

ANY ADJUSTMENT MADE PURSUANT TO THIS WARRANTY SHALL NOT BE CONSTRUED AS AN ADMISSION BY THE COMPANY THAT ANY PRODUCT WAS NOT AS WARRANTED.

COPYRIGHT© 2002 Gardner Denver, Inc.

Gardner Denver

Specifications subject to change without notice.

Copyright © 2006 Gardner Denver, Inc. Litho in U.S.A.

For additional information contact your local representative or

Gardner Denver Compressor
1800 Gardner Expressway, Quincy, Illinois 62305

Customer Service Department Telephone:
(800) 682-9868
FAX: (217) 224-7814

Visit our Web Site: www.gardnerdenver.com



ASR Resources, LLC

V-Smart Control Valve
Installation, Operation & Maintenance Manual

Groundwater Remediation Wells
PG&E Topock
CH2M-Hill, Oakland, CA

Project Overview

The Topock Groundwater remediation project utilizes (8) 4” multi-port V-Smart down hole control valves. These valves will be contractor installed with each valve including one set of continuous length dual line hydraulic hose connected to Nema-3R enclosed hydraulic power units (HPU). The HPU’s include internal mounted control panels which features local/off/remote selector switch, push buttons for pump start/stop, open/off/closed selector switch for manual operation and valve closed/pump running status lights.

Valve Installation

The V-Smart valve has 4” female standard straight threads in both the upper and lower integral couplings. The valve is installed below the pump bowls and above the check valve. It threads onto to the male standard straight threads of the column pipe. Care must be exercised when tightening the valve. Only strap-type wrenches should be used to avoid marring the surface of the valve body. The strap wrench should only be positioned on the upper coupling, while avoiding the hydraulic fittings. It should never be positioned on the sliding sleeve section of the valve.

Hydraulic Power Unit Installation

The hydraulic power unit is mounted in a Nema-3R enclosure with a hinged lockable door for easy access.


V SMART POSITION CONTROL



The 120VAC pump should be wired per the wiring diagram and checked for proper rotation by observing the motor shaft direction located at the top of the pump. An enclosure-mounted fan provides ventilation. The pump enclosure has two hydraulic hose fittings located on the left side of the enclosure for the open and closed hydraulic hose connections.

Fill the reservoir with the supplied food grade mineral oil until full as indicated on the level indicating gage located on the side of the pump reservoir. Remove the filler cap located on the top of the

reservoir and fill using a flexible oil funnel or a small drill pump with a filler hose.

Adding Fluid to Reservoir

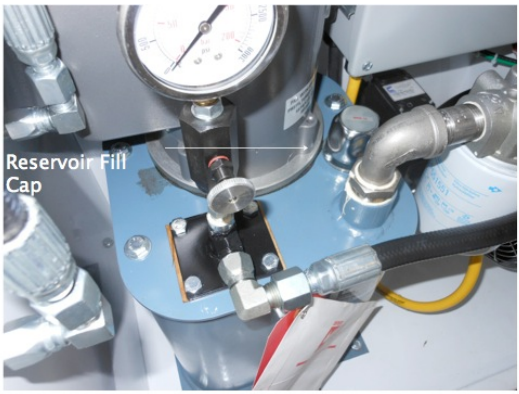

Remove cap by turning left and lifting up.
Use approved USDA Food Grade mineral oil ONLY.

Checking Reservoir Level



Maintain FULL level in oil level site glass

Hose Connections

Hydraulic power unit connections

Once the hydraulic power unit reservoir is filled, connect the external flow limiting (speed control) needle valves and gage assemblies.

External Flow Controls

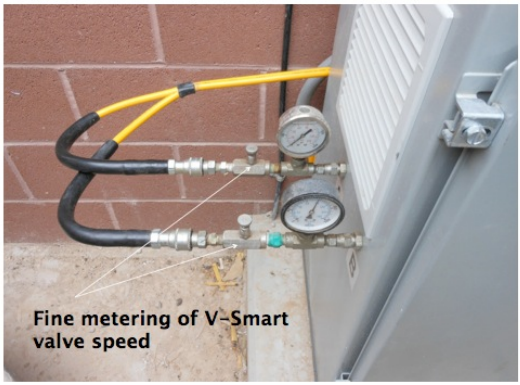

The external flow controls adjust the travel speed of the V-Smart valve when opening or closing. Valves are independently adjustable, clockwise to slow down the valve operating speed, counter-clockwise to speed up valve operating speed.

After tightening the fittings, start the hydraulic power unit at the front cabinet control panel by placing the selector switch in the local (HAND) setting and pushing pump start button.



Then, briefly select the open position on the manual selector switch (lower left) to fill the open needle valve/gage assemblies with hydraulic oil and repeat for the closed needle valve/gage assemblies by placing the manual selector switch in the closed position. Select the off position when complete.

Remove the fitting plugs on both the open and closed fittings at one end of the dual line hydraulic hose set that will run from the HPU to the V-Smart Valve. The hose marked with red tape is for the closed (B) connection; green tape is for the open (A) connection. Install the quick disconnect fittings. Connect the quick disconnect fittings to the needle valve/gage assemblies. Remove the open fitting plug on the valve end of the hose set, then place the manual operation selector switch in the open position to allow the oil to flow through the hose, purging air and discharging into a clean bucket (Reuse this oil). Repeat for the closed hose, placing the manual operation selector switch in the closed position. Run each hose for at least two minutes then cap the valve end of the hoses to keep the hoses full and air-free.

V-Smart valve connections

Once the valve is connected to the column pipe and lowered into position above the well-head, the hydraulic hoses can be attached to the valve. First, identify the correct valve fittings for the open and closed hydraulic connections. The open fitting, marked “O”, is to the right (with the valve in a vertical position) with the closed fitting, marked “C” on the left.



While holding the open hose fitting in a vertical position to prevent oil from leaking, remove the “open” fitting cap on the valve and “open” plug on the hose fitting. Start the pump at the control panel by placing the selector switch in the local (HAND) setting and push the pump start button. Then place the manual operation selector switch in the open position until oil is flowing at the top of the hose fitting, then quickly connect the open hose fitting (marked with green tape) to the open fitting on the valve and loosely tighten the fitting.



Make sure oil is flowing past the fitting to eliminate any air at the fitting connection, then tighten. Repeat the same process for the closed hose (marked with red tape), by placing the manual operation selector switch in the closed position.



With the selector switch still in the local (HAND) setting and the pump running, place the manual operation selector switch in the open position to observe the valve moving to the open position (valve sleeve will rise up exposing the injection ports. Once the valve reaches the end of travel, place the selector switch in the off position. [Note: The pressure relief valve on the hydraulic pump is set for 900 psi and will automatically bypass pressure once the valve reaches end of travel.] Repeat the procedure for the closed position. Run the valve several times full open and closed in the local (HAND) mode to verify operation. While running the valve, observe that there are no leaks at the fitting connections on the valve, at the internal hydraulic hose fittings inside the valve, or at the quick disconnect fittings where the two hose sections are connected and tighten fittings as required.

Slightly loosen the bleed screw on the side of the valve when the valve is both fully open and fully closed to make sure there is no air inside the pressure chamber of the valve.



Apply a bead of Lock-Tite 545 hydraulic thread sealant and securely tighten the bleed screw when finished. Once the valve has cycled several times and has been observed for smooth consistent operation, the HPU can be powered down by pressing the pump stop button and rotating the selector switch to the OFF position.

At this point the hoses can be disconnected at the quick disconnect fittings, where the hoses are connected at the HPU, with hose ends bagged and taped to prevent any foreign debris from getting into the fittings. The hoses can be coiled back onto a spool to assist with the valve installation into the well. As the valve is installed into the well casing, the hoses should be taped or strapped along each section of joint pipe.

Start up

The pump is factory set to relieve pressure back to the reservoir in excess of 900 psi as verified on the pump gage. This pressure setting only be changed if directed by ASR Resources.

Adjusting System Pressure

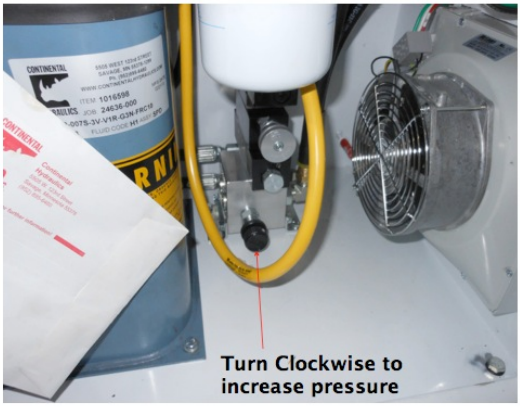

Warning: Do not exceed 1200 PSI Gauge pressure

With the hoses re-connected at the HPU, start the pump at the control panel by placing the selector switch in the local (HAND) setting and pushing the pump start button. Verify all pipeline isolation valves are closed for the “dry run” operation prior to pressurizing the column pipe. Place the manual operation selector switch in the open position while the valve moves to the open position. Repeat the procedure for the closed position, placing the manual operation selector switch in the closed position. Run the valve several times full open and closed in the local (HAND) mode to verify operation and confirm valve closed position via the panel display light. With the selector switch in the remote (AUTO) setting, open and close the valve via the PLC or computer (supplied by others) to verify operation. The valve is now ready to

operate either manually in the local (HAND) mode or remotely in the (AUTO) setting to commence pumping or injection operation. Once the valve is operating in a flowing condition the speed control hydraulic needle valves can be adjusted to the desired setting to speed up or slow down the valve travel response time. The external speed control adjustments typically address all speed of operation requirements. If larger adjustments need to be made, the internal flow control adjustment knob, which is factory pre-set, can be rotated to provide the required response time.

Internal Flow Control Adjustment

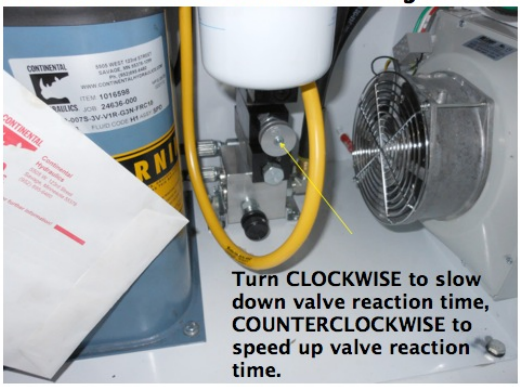

This flow control is factory set. It should not be readjusted unless external needle valve adjustments to not provide sufficient speed range settings.

V-Smart Valve Maintenance

There are no owner-serviceable components on the V-Smart valve itself. Any valve repairs will require the valve to be returned to ASR Resources for disassembly, repair, re-assembly and testing.

Cooling Air Filter



Filter pad may be cleaned with soft soap and water

Cooling Fan Maintenance



Advisory: Cooling Fan Starter control is thermostat, do not attempt to service when power unit is active.

HPU Pump Maintenance

Oil Filter Replacement

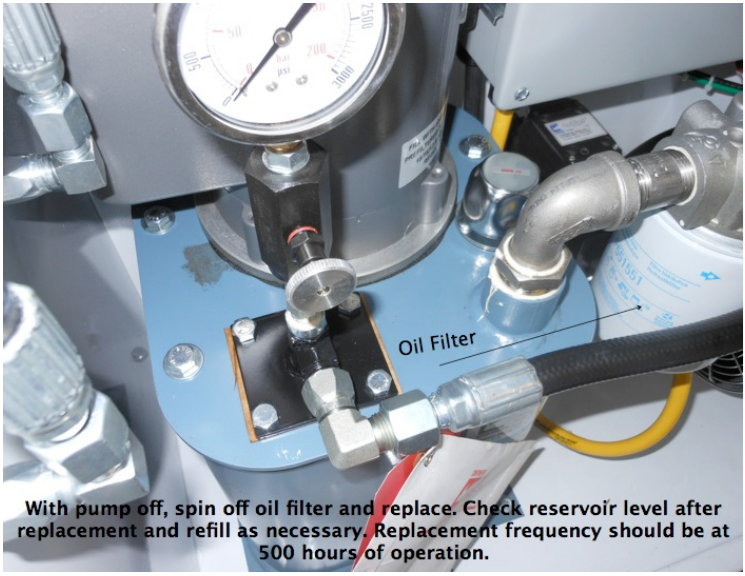

Troubleshooting

Pump does not develop pressure - Confirm wiring and pump rotation is correct. Confirm internal pressure adjustment knob has not been changed. Rotate clockwise to increase pressure

Pump shows pressure on the internal gage but no pressure on the external hose gages - Make sure flow control needle valves in the hose assembly are not fully closed.

Valve operates too slow or too fast - Adjust external flow control needle valves in the hose assembly. If required, adjust internal flow limiting knob.

Reservoir level drops during operation - A leak is present in the between the HPU and the valve. If not above ground leaks are noted, the valve will need to be pulled.

V-Smart drawing and flow performance data, HPU drawing, Wiring Diagram, Bill of Materials are located in the valve submittal drawings furnished on the project.

Three-phase pad-mounted compartmental type installation and maintenance instructions



Cooper Power Systems
by EATON

DISCLAIMER OF WARRANTIES AND LIMITATION OF LIABILITY

The information, recommendations, descriptions and safety notations in this document are based on Eaton Corporation's ("Eaton") experience and judgment and may not cover all contingencies. If further information is required, an Eaton sales office should be consulted. Sale of the product shown in this literature is subject to the terms and conditions outlined in appropriate Eaton selling policies or other contractual agreement between Eaton and the purchaser.

THERE ARE NO UNDERSTANDINGS, AGREEMENTS, WARRANTIES, EXPRESSED OR IMPLIED, INCLUDING WARRANTIES OF FITNESS FOR A PARTICULAR PURPOSE OR MERCHANTABILITY, OTHER THAN THOSE SPECIFICALLY SET OUT IN ANY EXISTING CONTRACT BETWEEN THE PARTIES. ANY SUCH CONTRACT STATES THE ENTIRE OBLIGATION OF EATON. THE CONTENTS OF THIS DOCUMENT SHALL NOT BECOME PART OF OR MODIFY ANY CONTRACT BETWEEN THE PARTIES.

In no event will Eaton be responsible to the purchaser or user in contract, in tort (including negligence), strict liability or otherwise for any special, indirect, incidental or consequential damage or loss whatsoever, including but not limited to damage or loss of use of equipment, plant or power system, cost of capital, loss of power, additional expenses in the use of existing power facilities, or claims against the purchaser or user by its customers resulting from the use of the information, recommendations and descriptions contained herein. The information contained in this manual is subject to change without notice.

Contents

SAFETY INFORMATION

Safety Information . . . . . **IV**

PRODUCT INFORMATION

Introduction **1**

Acceptance and Initial Inspection **1**

Handling **1**

Storage **2**

INSTALLATION INSTRUCTIONS

Installation Location **2**

Mounting the Transformer **2**

Pre-Service Inspection (Exterior) **2**

Pre-Service Inspection (Interior) **3**

External Connections **4**

ACCESSORIES

Liquid Level Gauge **5**

Liquid Temperature Gauge **5**

Pressure-Vacuum Gauge **6**

Pressure Relief Device **6**

SWITCHES AND PROTECTIVE DEVICES

Bay-O-Net Fuse **7**

Internal Cartridge Fuse **10**

Internal Loadbreak Switches **11**

Tap-Changer **12**

Dual-Voltage and Delta-Wye Switch **14**

Vacuum Fault Interrupter (VFI) **15**

Air Switches (Arc Strangler™) **16**

Surge Arresters **17**

MAINTENANCE

Exterior Maintenance **19**

Cabinet Interior Maintenance **19**

Tank Internal Maintenance **19**

Tank Cover Removal and Installation **19**

Bushing Removal and Replacement **22**

Cabinet Removal and Installation **22**

Insulating Liquid Maintenance **22**

OPERATION

Operation **24**

APPLICABLE STANDARDS

Applicable Standards **25**

SPARE PARTS AND SERVICE

Spare Parts and Service **25**

Safety for life

Eaton's Cooper Power Systems products meet or exceed all applicable industry standards relating to product safety. We actively promote safe practices in the use and maintenance of our products through our service literature, instructional training programs, and the continuous efforts of all Eaton's Cooper Power Systems employees involved in product design, manufacture, marketing, and service.

We strongly urge that you always follow all locally approved safety procedures and safety instructions when working around high voltage lines and equipment, and support our "Safety For Life" mission.

Safety information

The instructions in this manual are not intended as a substitute for proper training or adequate experience in the safe operation of the equipment described. Only competent technicians who are familiar with this equipment should install, operate, and service it.

A competent technician has these qualifications:

- Is thoroughly familiar with these instructions.
- Is trained in industry-accepted high and low-voltage safe operating practices and procedures.
- Is trained and authorized to energize, de-energize, clear, and ground power distribution equipment.
- Is trained in the care and use of protective equipment such as flash clothing, safety glasses, face shield, hard hat, rubber gloves, clampstick, hotstick, etc.

Following is important safety information. For safe installation and operation of this equipment, be sure to read and understand all cautions and warnings.

Hazard Statement Definitions

This manual may contain four types of hazard statements:

DANGER

Indicates a hazardous situation which, if not avoided, will result in death or serious injury.

WARNING

Indicates a hazardous situation which, if not avoided, could result In death or serious injury.

CAUTION

Indicates a hazardous situation which, if not avoided, could result in minor or moderate injury.

CAUTION: Indicates a hazardous situation which, if not avoided, could result in equipment damage only.

Safety Instructions

Following are general caution and warning statements that apply to this equipment. Additional statements, related to specific tasks and procedures, are located throughout the manual.

DANGER

Hazardous voltage. Contact with hazardous voltage will cause death or severe personal injury. Follow all locally approved safety procedures when working around high- and low-voltage lines and equipment. **G103.3**

WARNING

Before installing, operating, maintaining, or testing this equipment, carefully read and understand the contents of this manual. Improper operation, handling or maintenance can result in death, severe personal injury, and equipment damage. **G101.0**

WARNING

This equipment is not intended to protect human life. Follow all locally approved procedures and safety practices when installing or operating this equipment. Failure to comply can result in death, severe personal injury and equipment damage. **G102.1**

WARNING

Power distribution and transmission equipment must be properly selected for the intended application. It must be installed and serviced by competent personnel who have been trained and understand proper safety procedures. These instructions are written for such personnel and are not a substitute for adequate training and experience in safety procedures. Failure to properly select, install or maintain power distribution and transmission equipment can result in death, severe personal injury, and equipment damage. **G122.3**

IMPORTANT

Do not Exceed Transformer Ratings. Transformers should be operated only at the ratings specified on the transformer nameplate. Prolonged overload operation will measurably shorten the projected service life of a mineral oil-filled transformer. PEAK™ transformers have extended life and can be operated at overload conditions while still exceeding ANSI standard insulation life.

Introduction

These transformers are designed for installation on three-phase underground systems. All units are constructed for weather-exposed mounting on a concrete pad with high- and low-voltage cable entering the operating compartments through an opening in the pad.

Read this manual first

Read and understand the contents of this manual and follow all locally approved procedures and safety practices before installing or operating this equipment.

Additional information

These instructions cannot cover all details or variations in the equipment, procedures, or process described, nor to provide directions for meeting every possible contingency during installation, operation, or maintenance. For additional information, contact your Eaton's Cooper Power Systems representative.

Acceptance and initial inspection

Receiving Inspection

It is important that a thorough inspection of the transformer be made before it is unloaded from the carrier.

1. Ensure that *all* parts listed on the bill of lading are present.
2. Before unloading the transformer, inspect for signs of damage or mishandling. Locate accessory parts that may have been shipped separately.
3. If damage is detected or shortages are noticed, write a brief description on the freight bill. Normally, the transformer is shipped FOB point of manufacture, and it is the customer's responsibility to file a claim against the carrier. If the transformer was shipped FOB destination, notify your Eaton's Cooper Power Systems representative. He or she will, with the inspector's report, take the necessary steps to file a claim against the carrier.

⚠ WARNING

Heavy Equipment. Improper handling can cause severe injury, death, or damage to transformer. Before moving the transformer, read the handling instructions provided in this manual.

Handling

Special procedures must be followed when handling transformer in ambient temperatures below -20 °C. Contact your Eaton's Cooper Power Systems representative for further instructions. Failure to follow special handling procedures may cause premature failure of transformer and its components.

Transformer weight

The transformer weight is shown on the transformer nameplate. Most of the weight in a pad-mounted transformer assembly is in the main tank that holds the core and coil assembly and the insulating liquid.

Moving transformers shipped on pallets

Transformers shipped on pallets may be lifted or moved by forklift trucks of proper capacity. When using a forklift, lift with the transformer tank closest to the mast of the forklift since most of the transformer weight is in the tank. Pallet-mounted equipment may also be moved by crane or hoist.

Lifting transformers by crane or hoist

Check the weight of the transformer and the capacity and condition of all hoisting or lifting equipment. Do not use worn, frayed or damaged cables or slings. Do not use hoisting machinery with load capacity less than the weight of the transformer. Improper use of hoist or jack could seriously damage the transformer or its attachments or cause serious personal injury.

For unloading, lifting lugs are provided near the top of the transformer tank. Lifting chain or cable angles should not be over 30° from vertical. Otherwise, spreaders should be used to hold the lifting cables apart to avoid any bending of the structure or lifting lugs.

Do not attempt to lift the transformer by placing a continuous loop of chain or cable around the unit or lifting lugs. This can damage the transformer and can cause accidents resulting in serious personal injury.

If the transformer cannot be lifted by crane, it may be skidded or moved by rollers.

Using jacks

Place jacks under the tank base on the open ends of the transformer tank. Jacking pads are provided for transformers with bases greater than 6". Do not place jacks under radiators or terminal compartment frames.

When jacking a transformer for insertion of rollers underneath it, ensure that four jacks are used and that two adjacent corners are raised simultaneously and evenly to avoid warping the base. When using rollers, use as many as necessary to distribute the weight uniformly.

Do not attach pulling lines to moldings or other sheet metal parts of the transformer.

Storage

Transformers that will not be placed in service immediately should be stored with terminal compartment doors closed and sealed to prevent damage to bushings or other attachments.

Quality standards

ISO 9001 certified quality management system

Installation

Installation location

The transformer must be located to meet applicable fire codes. For indoor installations, the installation location must meet the requirements of the National Electrical Code (NEC®) with sufficient space requirements and proper overcurrent protection as specified by the listing body that has jurisdiction over the installation.

These pad-mounted transformers are built to operate at altitudes up to 3300 feet at 30 °C average and 40 °C maximum ambient, unless otherwise specified. Before operating a standard transformer at higher altitudes, contact your Eaton's Cooper Power Systems representative.

Mounting the transformer

The transformer should be mounted on a level concrete pad. The pad should be strong enough to support the weight of the transformer. The site must be adequately prepared to prevent the transformer from tilting beyond two degrees from horizontal.

⚠ WARNING

Fire Hazard. Non-level installation of transformer can result in fire and cause severe personal injury or death. Prepare transformer installation site such that transformer does not tilt more than two (2.0) degrees from horizontal while the transformer is in service at the site.

Tilting beyond two degrees may cause internal components to come out of the oil and/or cables to mechanically stress the bushings and bushing gaskets. Excessive tilt (beyond two degrees) can result in a lower dielectric strength for the transformer than the basic insulation level (BIL) listed on the nameplate. Reduced BIL can result in an internal dielectric breakdown with a risk of explosion, tank rupture, or fire.

To maintain full cabinet security, the transformer tank and cabinet base have provisions for installing cleats to secure transformer to pad. If gaps still exist between the cabinet and pad after cleating the cabinet, the installation will not provide the security needed to prevent tampering by the public. Add a permanent mortar seal to fill the gaps.

Pre-service inspection (exterior)

New transformers, or transformers which are being activated after a period of storage, should be thoroughly inspected before being connected to the power distribution system to identify damage which may have occurred during storage.

1. The transformer exterior should be inspected for nicks, dents, and scratches. Repair damage to weather-resistant finishes promptly.
2. The tank cover and manhole/handhole cover seals and all gaskets or seals at bushings, gauges, fuses, operating devices, etc., should be inspected for evidence of insulating liquid seepage. Repair leaking or improperly tightened gaskets and seals before the transformer is placed in service.
3. Under normal conditions, the transformer leaves the factory with a slight vacuum (negative pressure) in the tank over the oil. However, positive pressure may have been requested or have developed in the tank during shipment or storage. Continued absence of either negative or positive pressure may indicate a leak at a gasket seal or tank seam, and require further investigation. To leak test transformer, remove the pressure relief valve (see Figure 1) and pressurize the headspace to ensure that there are no leaks. The test pressure should not exceed 7 psig. The established pressure should be maintained for at least four hours to ensure that all the seals are proper.

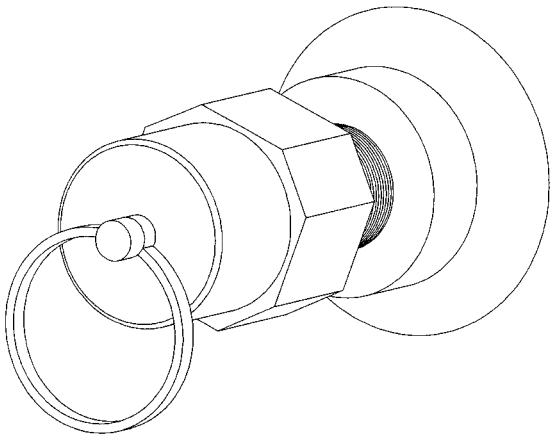

Figure 1. Pressure Relief Valve.

⚠ CAUTION

Elevated Pressure. Can cause severe personal injury. Do not remove liquid level plug before venting transformer to zero pressure. Pull ring on pressure relief valve to relieve pressure (see Figure 2).

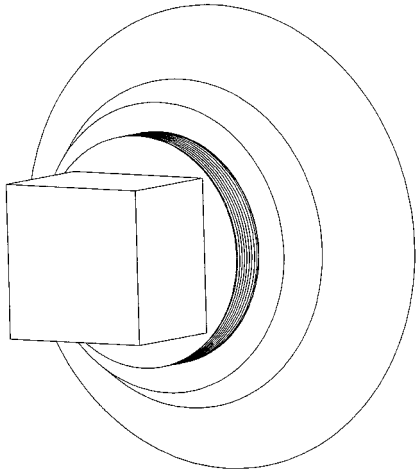

Figure 2. Liquid Level Plug.

4. The liquid level inside the tank must be checked (see Insulating Liquid Maintenance section of this manual). On transformers equipped with a liquid level gauge, the liquid level may be read directly from the gauge. On transformers that are not gauge equipped, the tank liquid level must be determined by removing the liquid level plug (see Figure 2). At 25 °C liquid temperature, the liquid level should be at the bottom edge of the liquid level plug hole.

   If the tank temperature is greater than ambient air temperature, the transformer tank must be vented to zero pressure before the liquid level plug is removed. Failure to do so may cause hot oil to be sprayed from the plug hole and may result in severe personal injury.

⚠ WARNING

Fire Hazard. Energizing transformer in ambient temperatures below -20 °C can result in fire and cause severe personal injury or death. Contact your Eaton's Cooper Power Systems representative for further instructions on energizing transformer in ambient temperatures below -20 °C.

5. Special procedures must be followed when energizing a transformer in ambient temperatures below -20 °C. Contact your Eaton's Cooper Power Systems representative for further instructions. Failure to follow special start-up procedures may cause premature failure of the transformer and its components. Also, note warning and caution statements in Switches and Protective Devices section of this manual for further precautions when operating under-oil loadbreak accessories in insulating liquid temperatures below 0 °C.

Pre-service inspection (interior)

Pre-service interior inspection may not be required if exterior inspection reveals no evidence of damage.

CAUTION

Before opening the transformer tank for Pre-Service Inspection, read the Insulating Liquid Maintenance section in this manual. This section explains safety precautions that should be taken and gives instructions on how to prevent insulating liquid contamination.

If interior inspection is required, the transformer must be opened by removing the manhole/handhole or tank cover. See the Tank Cover Removal and Installation section of this manual.

Pre-service interior inspections should be restricted to noting defects or damage that may prevent proper operation of the transformer.

Inspect for:

1. Moisture on underside of the tank cover or man-hole cover.
2. Loose, shifted, or damaged parts (bushings, fuse holders, etc.).
3. Broken or loose connections.
4. Contaminated insulating liquid (sediment or foreign objects on the tank bottom, dirt or air bubbles suspended in the liquid).

Internal damage

If concealed internal damage is suspected, it may be necessary to lower the insulting liquid level to complete the inspection. Refer to the Insulating Liquid Maintenance section of this manual.

Contaminated insulating liquid

If moisture is found inside the tank, or there is evidence that the insulating liquid may be otherwise contaminated, a liquid sample should be taken for analysis. Samples should be drawn from the bottom of the tank. For instruction on sampling the insulating liquid please see the Insulating Liquid Maintenance section of this manual.

If moisture is present in the liquid, the transformer must be dried out. Contact your Eaton's Cooper Power Systems representative for special instructions on dry-out or other decontamination processes.

External connections

⚠ WARNING

Hazardous voltage. Can cause severe injury, death, or damage to equipment. Ground transformer following industry-accepted safe grounding practices before making other electrical connections. De-energize power distribution wires that will be connected to transformer. Verify that wires are de-energized at the transformer before connecting to transformer.

Transformers that require no internal inspection or repair may be connected to the system. Transformers must be connected and operated as indicated by the transformer nameplate. Clean bushings and terminals before making connections. Remove dirt, grease or foreign material. Contamination can cause failure of the bushings.

Cables connected to the transformer terminals are to have sufficient flex to allow normal pad movement due to ground freeze/thaw and settling. Insufficient cable flex may cause premature failure of the bushings.

Ground connections

The transformer tank must be connected to a permanent, low-resistance ground. If the tank is not solidly grounded and the transformer is connected to the power distribution system, then the tank should be regarded as energized. An energized tank is extremely dangerous. Contact with an energized tank can shock, burn, or cause death.

Three-phase pad-mounted transformers are equipped with two grounding pads for making the ground connection. The pads (see Figures 3 and 4) are located on the faceplate of the transformer behind the terminal compartment doors. One pad is in the primary compartment and the other in the secondary compartment.

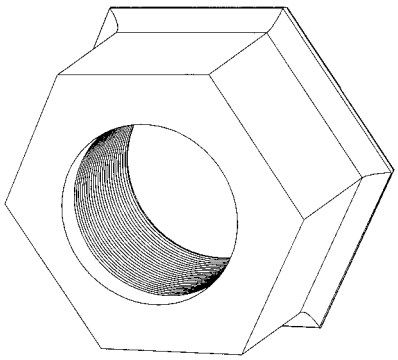

Figure 3. Grounding Pad (≤500 kVA).

Grounded wye-grounded wye transformer connections

Grounded Wye-Grounded Wye winding connection transformers are designed for power distribution systems that have a grounded neutral connector. All windings designed for grounded neutral operation must be permanently and solidly grounded to the system neutral without electrical resistance.

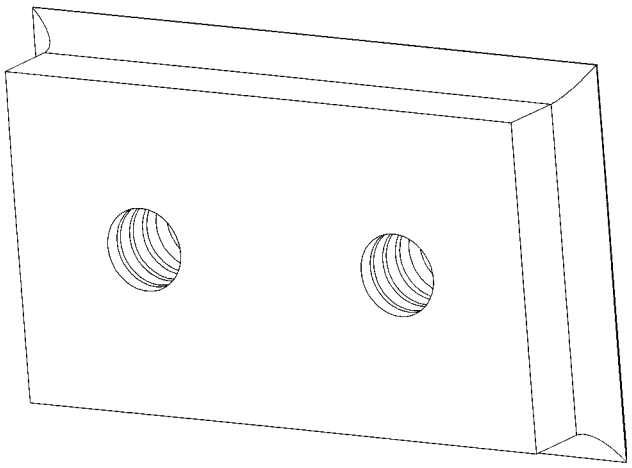

Figure 4. Grounding Pad (>500 kVA).

High voltage connections

Make connections as shown in the diagrams and information on the transformer nameplate. Transformer neutrals must be connected to system neutrals. Leads and connections that are not used must be insulated from ground and all other leads.

Livefront transformer connections

Externally clamped porcelain bushings are normally provided for high voltage connection to three-phase pad-mounted livefront transformers. The bushings have tin-plated eyebolt terminals suitable for both copper and aluminum conductors. The bushings are positioned to allow vertical takeoff of primary cables entering from below.

Deadfront transformer connections

Deadfront three-phase pad-mounted transformers are equipped with universal bushing wells, one-piece bushings, or bushing wells with factory-installed inserts. Universal bushing wells must be field equipped with bushing well inserts before loadbreak cable connections can be made. Bushing well inserts must be compatible with the universal bushing well. Use of improperly rated inserts can cause premature failure of the transformer or its components. Read the manufacturer's instructions furnished with the inserts before installing to determine if they are compatible.

Low voltage connections

Spade terminals are the standard low voltage connectors used for three-phase pad-mounted transformers. The low voltage bushings are externally clamped to the transformer tank wall.

Accessories

Three-phase pad-mounted transformers can be equipped with a variety of optional equipment. Most such accessories are factory installed and no fieldwork is required to prepare them for operation.

Liquid level gauge

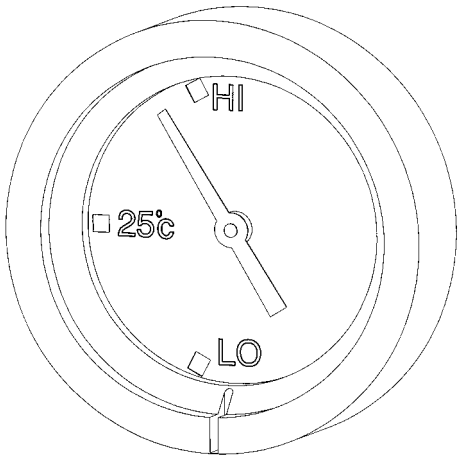

Figure 5. Liquid Level Gauge.

Transformers may be furnished with a liquid level indicator as optional equipment to aid in the systematic inspection of the transformer under load. It consists of a float-arm inside the tank, an indicating pointer and a magnetic coupling between the two across a liquid-tight separation.

The gauge may have two SPDT (Single Pole Double Throw) alarm contacts to give a remote annunciation of low liquid level. For wiring and contact ratings, refer to the schematic furnished with the transformer.

Liquid temperature gauge

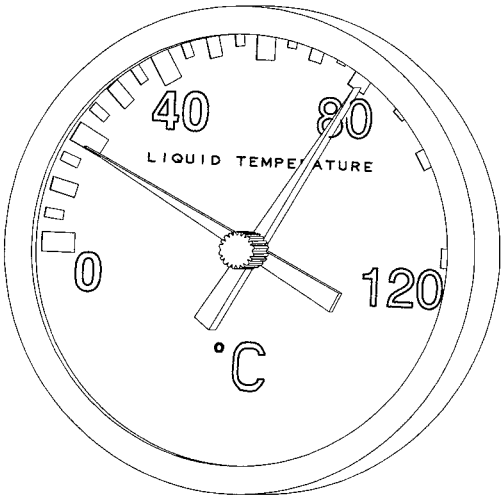

Figure 6. Liquid Temperature Gauge.

Transformers may be furnished with a temperature gauge as optional equipment to indicate the top liquid temperature in the tank in degrees Centigrade. The temperature-sensitive element is mounted in a leak-proof well, permitting removal of the thermometer without lowering the oil level. The device is furnished with an additional red pointer to show the highest temperature attained since the last reset. To reset the maximum indicator, turn the knob in the center of the dial.

The thermometer may have two SPDT contacts for a high temperature alarm, for energizing a fan circuit or for a low temperature alarm. For wiring and contact ratings, refer to the schematic furnished with the transformer.

Pressure-vacuum gauge

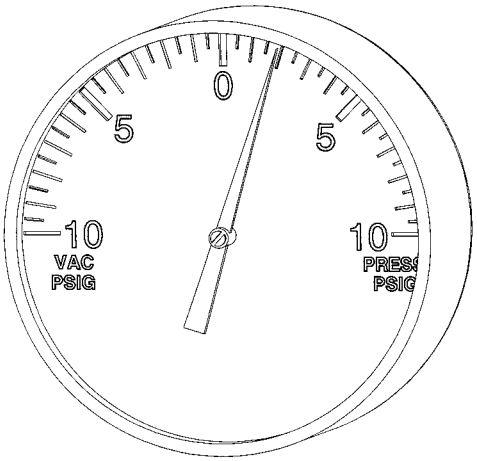

Figure 7. Pressure-Vacuum Gauge.

Transformers may be furnished with a pressure-vacuum gauge as optional equipment to indicate whether the gas space in the tank is under positive or negative pressure. The pressure will vary depending on the transformer temperature. If the transformer is de-energized or operating under light load in low ambients, the pressure may be negative.

CAUTION

If the indicator reads zero and does not change under any load condition, the transformer should be checked for a possible leak in the seal.

If sufficient air has been absorbed by the liquid during shipment or storage, the transformer may operate indefinitely in the vacuum range, depending upon the loading conditions. This, in itself, is not cause for concern, provided the pressure vacuum gauge does not remain on zero for any length of time - an indication of a leak.

The transformer may have pressure vacuum switches with two SPDT contacts for remote alarm on positive and negative pressure. For wiring and contact ratings, refer to the schematic furnished with the transformer.

Pressure relief device

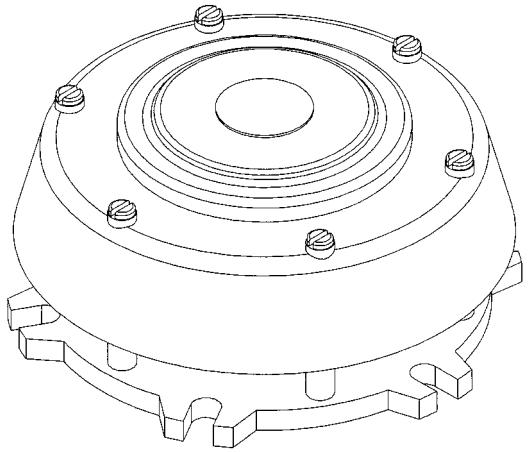

Figure 8. Pressure Relief Device.

Transformers may have a cover-mounted pressure relief device (PRD) in addition to the faceplate-mounted pressure relief valve (PRV) standard on all three-phase pad-mounted designs. The cover-mounted PRD consists of a self-resetting, spring-loaded diaphragm and a mechanical operation indicator. Should the tank pressure increase above that for which the device is set, the gas pressure will lift the diaphragm and let the gas escape quickly. Immediately after the pressure returns to normal, the diaphragm will reset and reseal the transformer. A mechanical indicator will protrude vertically. This must be reset manually to indicate subsequent operations.

The PRD may have SPDT alarm contacts for remote signaling of device activation. For wiring and contact ratings, refer to the schematic furnished with the transformer.

Switches and protective devices

Bay-O-Net fuse

⚠ WARNING

Hazardous voltage. Can cause severe injury, death, or damage to equipment.

- **Do not operate loadbreak equipment if a fault condition is suspected. Doing so can cause an explosion or fire.**
- **Use a hotstick to operate transformer loadbreak equipment.**
- **After operating transformer loadbreak equipment, check that voltages at transformer terminals are the expected values. Checking voltages verifies that loadbreak equipment operated properly and that electrical circuit conditions are as expected.**
- **Before servicing transformer secondary connected equipment, verify that all transformer secondary terminals have zero voltage and ground the transformer secondary terminals following industry accepted safe grounding practices. Grounding secondary terminals protects against situations such as a standby generator energizing transformer from the secondary circuit.**
- **Before servicing transformer, ALWAYS de-energize the transformer from a remote upstream source and then proceed to ground all primary and secondary transformer terminals following industry accepted safe grounding practices. Grounding secondary terminals protects against situations such as a standby generator energizing transformer from the secondary circuit.**
- **Follow industry accepted safety practices. Utilize protective clothing and equipment when working with loadbreak equipment.**

⚠ WARNING

Three-phase pad-mounted trans-formers use conventional transformer oil, R-Temp fluid, or Envirotemp™ FR3™ fluid for an insulating liquid. When the insulating liquid temperature is less than -20 °C (-4 °F) for conventional transformer oil, less than 0 °C (32 °F) for R-Temp fluid, or less than -10 °C (14 °F) for Envirotemp™ FR3™ fluid, viscosity is reduced, which may reduce make and break capabilities of loadbreak devices. Below these temperatures, under-oil loadbreak accessories should not be used to make or break a load. Instead, de-energize transformer from a remote upstream source before operating under-oil loadbreak devices.

⚠ WARNING

Hazardous voltage. Can cause severe injury, death, or damage to equipment. Use a hotstick to service a Bay-O-Net fuse. Do not install a Bay-O-Net fuse to complete an electrical circuit if a fault condition is suspected. Do not re-energize suspected failed equipment. After installing Bay-O-Net fuse, energize transformer from a remote upstream source.

Eaton's Cooper Power Systems Bay-O-Net fuse assemblies are used to protect transformers and distribution systems. The assemblies are mounted on the faceplate of pad-mounted transformers and combine the ease of hotstick operation with the safety of deadfront construction (see Figure 9).

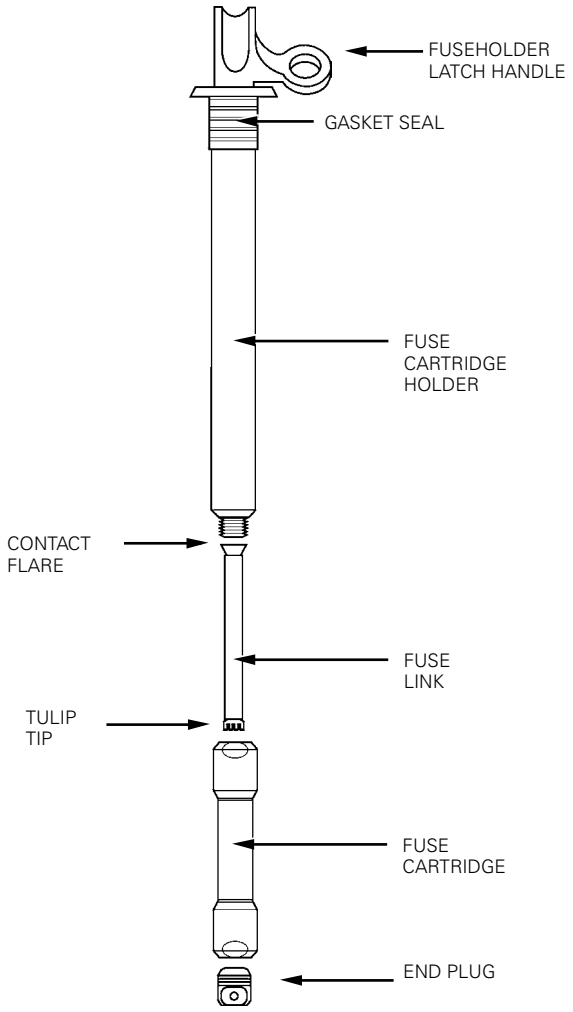

Figure 9. Bay-O-Net fuse assembly.

A Bay-O-Net fuse is not recommended for fault closing. Do not re-energize suspected failed equipment; serious personal injury may result. Internal fault conditions can cause the transformer to rupture or the cover to blow off. Always energize transformer from a remote upstream source.

When replacing a blown fuse, the feed circuit should be opened and closed from a remote location. The Bay-O-Net fuse should be replaced using the procedure described below and re-energized from a remote upstream source. If equipment is re-fused while energized, the fuse could close in on the system's maximum fault current. Any equipment that has a suspected failure should not be closed in with the fuse.

For additional information on the Eaton's Cooper Power Systems Bay-O-Net fuse assembly, including loadbreak ratings, refer to Electrical Apparatus bulletins 240-40, S240-40-2, and S240-40-3.

Current sensing, dual sensing, dual element, and high ampere overload links can be used in a Bay-O-Net fuse assembly. For additional information on these links, including interrupting ratings, see Electrical Apparatus bulletins 240-45, 240-46, 240-48, and 240-49 respectively.

Bay-O-Net fuse re-fusing instructions

Remove fuse holder
Step 1 - Relieve tank pressure.

Use a hotstick to perform the following steps:

1. Pull ring on pressure relief valve to open valve. Hold the valve open for 30 seconds after pressurized air can no longer be heard hissing through the valve.

⚠ CAUTION

If tank pressure has not been released, the fuse holder may be forced out of the Bay-O-Net housing. Maintain control of fuse holder at all times.

2. Close pressure relief valve and wait 30 seconds.
3. Pull pressure relief valve open. Hold the valve open until hissing stops, and then for another 5 seconds. Pulling the valve open again allows any residual pressure to be released from tank.

Step 2 - Unlock fuseholder and break seal.

Use a hotstick to perform the following steps:

1. Stand to one side of the Bay-O-Net being removed.
2. Attach hotstick to fuseholder eye.
3. Twist hotstick to unlock fuseholder (see Figure 10).
4. Turn fuseholder 90° in the Bay-O-Net housing to break seal between seal gasket and Bay-O-Net housing (see Figure 11).

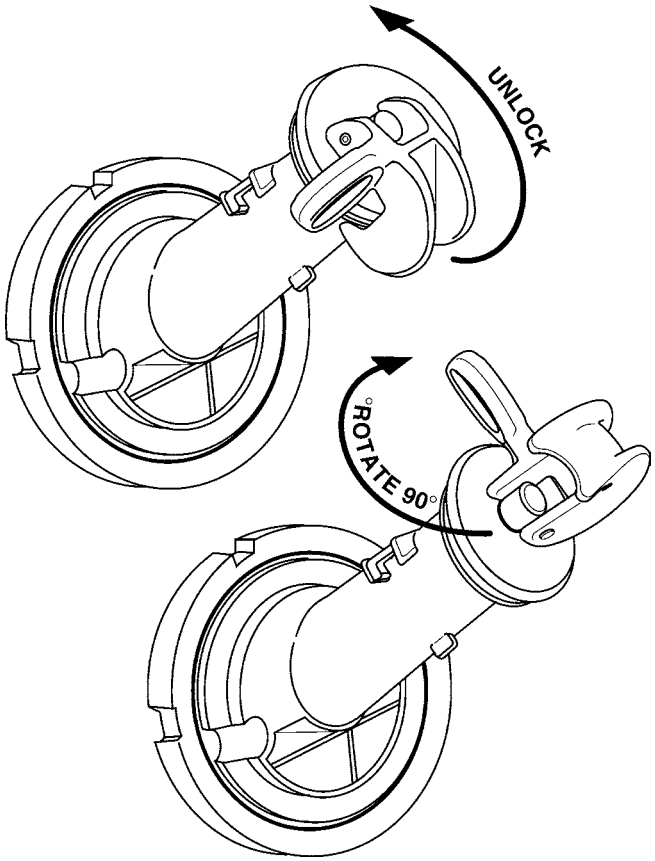

Figure 10. Unlock and Turn Fuseholder 90° in the Bay-O-Net Housing.

Step 3 - Draw fuseholder out.

Use a hotstick to perform the following steps:

1. Draw fuseholder out quickly 8 to 10 inches to interrupt load (see Figure 11).
2. Wait several seconds for fluid to drain from fuseholder.

⚠ CAUTION

If fluid is coming out of the Bay-O-Net assembly, open the pressure relief valve again to equalize pressure inside the tank.

Step 4 - Remove fuseholder from Bay-O-Net housing.

1. Remove fuseholder from Bay-O-Net housing.
2. Wipe off fuse cartridge holder and fuse cartridge (see Figure 12).

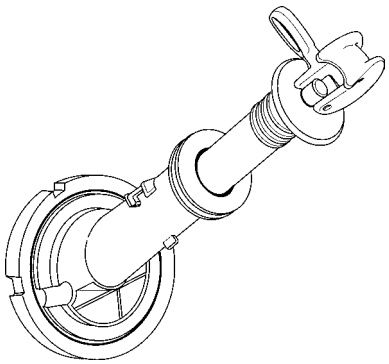

Figure 11. Draw Fuseholder Out 8 to 10 Inches.

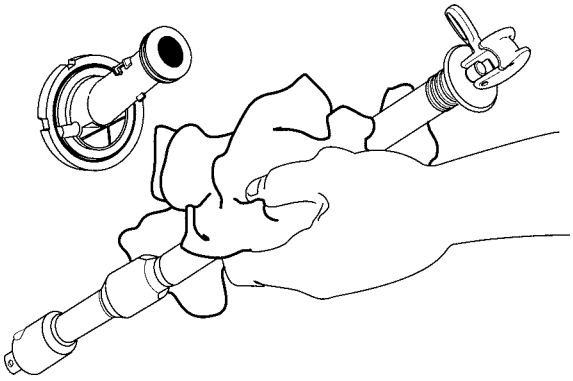

Figure 12. Remove Fuseholder From Bay-O-Net Housing and Wipe Clean.

Replace fuse link

A separate replaceable fuse link, fuse cartridge, and end plug are available for all Eaton's Cooper Power Systems Bay-O-Net fuses except catalog numbers 4000358C16CB and C18CB, 4038361C03CB, C04CB, C05CB, and solid link 4038361C10CB. These catalog numbers are integral assembles which include the link, cartridge and end plug. For the above listed integral assemblies follow Step 5 and then tighten new cartridge/fuse/end plug against fuse holder using 50 to 70 in-lbs. torque; then, proceed to Step 9. For all other Bay-O-Net fuses, follow Steps 5 through 9.

Step 5 - Remove fuse cartridge.

Use a 3/4 inch wrench to remove fuse cartridge from fuse cartridge holder (see Figure 13).

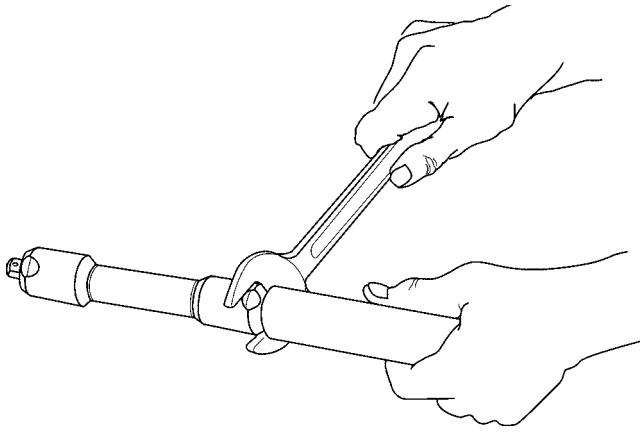

Figure 13. Remove Fuse Cartridge Holder.

Step 6 - Remove end plug and fuse link from fuse cartridge.

1. Use 3/4 inch and 1/2 inch wrenches to remove end plug (see Figure 14).
2. Use screwdriver or other tool to straighten tulip tip end of fuse link and push fuse link out of fuse cartridge. Replace fuse cartridge if damaged.

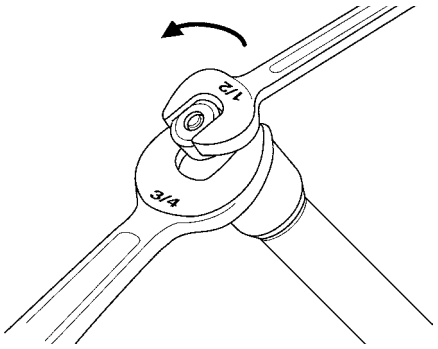

Figure 14. Remove End Plug from Fuse Cartridge.

Step 7 - Insert replacement fuse link into fuse cartridge (see Figure 15).

1. A slight resistance may occur when inserting fuse link into cartridge.
2. If the catalog number of the fuse being replaced is not known, consult specifications or contact your Eaton's Cooper Power Systems representative. Fuse catalog numbers may also be indicated on the transformer door and/or nameplate.

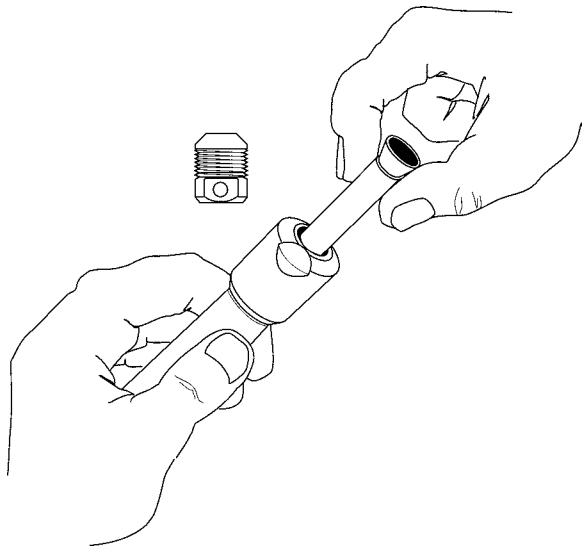

Figure 15. Insert Replacement Fuse Link.

Step 8 - Tighten cartridge to fuse cartridge holder.

1. Tighten fuse contact flare end against fuse cartridge holder using 50 to 70 in-lbs. torque.
2. Replace end plug on the other end of fuse cartridge and tighten to 50 to 70 in-lbs. torque.
3. Remove end plug and ensure that petals of tulip tip have spread uniformly.
4. Replace end plugs, applying 50 to 70 in-lbs. torque to both connections.

Step 9 - Install fuse holder.

Use a hotstick to perform the following steps.

1. Pull pressure relief valve, holding it open until hissing stops, and then for another five seconds.
2. Attach end of fuseholder assembly to hotstick and insert holder assembly firmly into Bay-O-Net housing.
3. Twist locking handle so that latch engages Bay-O-Net housing's shoulder, and steel washer seats tightly on end of tube of Bay-O-Net holder assembly.

⚠ CAUTION

Visually inspect entire fuseholder assembly to ensure it is installed properly.

Internal cartridge fuse

⚠ WARNING

Hazardous voltage. Can cause severe injury, death, or damage to equipment. Turn off power to transformer before servicing internal cartridge fuses. Ground transformer following industry accepted safe grounding practices.

Internal cartridge fuses are "weak link" expulsion-type fuses used to protect transformers and distribution systems. Internal cartridge fuse assemblies are mounted inside the transformer tank and are compatible for use in many insulating liquids. See fuse manufacturer's product literature for maximum interrupting ratings.

Internal cartridge fuse replacement

1. Verify that tank is grounded. De-energize transformer from a remote upstream source. Ground all bushings and terminals.
2. Remove tank cover as outlined in Tank Cover Removal and Installation section of this manual.
3. Locate cartridge fuse assembly (see Figure 16) on back tank wall.

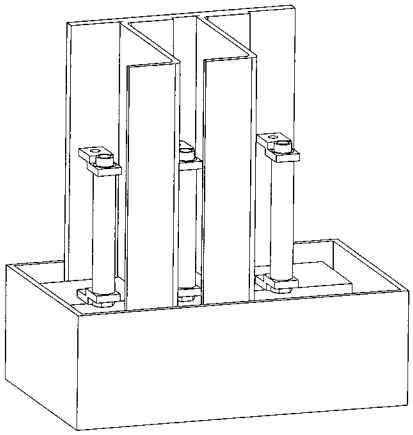

Figure 16. Cartridge Fuse Assembly.

4. Carefully remove all nuts that attach wire leads to fuse, making sure not to drop nuts into the transformer tank. Note position of all nuts, flat washers, spring washers, etc., so that they can be reinstalled in the same locations.
5. Replace fuses as required. Reconnect leads and reinstall washers and nuts in original locations.
6. Re-install cover as outlined in Tank Cover Removal and Installation section of this manual.

Internal loadbreak switches

⚠ WARNING

Hazardous voltage. Can cause severe injury, death, or damage to equipment.

- **Do not operate loadbreak equipment if a fault condition is suspected. Doing so can cause an explosion or fire.**
- **Use a hotstick to operate transformer loadbreak equipment.**
- **After operating transformer loadbreak equipment, check that voltages at transformer terminals are the expected values. Checking voltages verifies that loadbreak equipment operated properly and that electrical circuit conditions are as expected.**
- **Before servicing transformer secondary connected equipment, verify that all transformer secondary terminals have zero voltage and ground the transformer secondary terminals following industry accepted safe grounding practices. Grounding secondary terminals protects against situations such as a standby generator energizing transformer from the secondary circuit.**
- **Before servicing transformer, ALWAYS de-energize the transformer from a remote upstream source and then proceed to ground all primary and secondary transformer terminals following industry accepted safe grounding practices. Grounding secondary terminals protects against situations such as a standby generator energizing transformer from the secondary circuit.**
- **Follow industry accepted safety practices. Utilize protective clothing and equipment when working with loadbreak equipment.**

⚠ WARNING

Three-phase pad-mounted transformers use conventional transformer oil, R-Temp fluid, or Envirotemp™ FR3™ fluid for an insulating liquid. When the insulating liquid temperature is less than -20 °C (-4 °F) for conventional transformer oil, less than 0 °C (32 °F) for R-Temp fluid or less than -10 °C (14 °F) for Envirotemp™ FR3™ fluid, viscosity is reduced, which may reduce make and break capabilities of loadbreak devices. Below these temperatures, under-oil loadbreak accessories should not be used to make or break a load. Instead, de-energize transformer from a remote upstream source before operating under-oil loadbreak devices.

It is recommended that remote energization be used whenever possible. Operate loadbreak switches using hotstick tool. After loadbreak switch is switched to "OPEN" position, verify that transformer secondary terminals have zero voltage and then ground the secondary terminals to prevent transformer backfeed energization.

Two-position loadbreak switch

The operating mechanism of the Eaton's Cooper Power Systems two-position loadbreak switch employs a manually-charged over-toggle stored spring assembly which performs independent of operator speed. The spring-loaded activating mechanism ensures quick loadbreak or loadmake operations in less than one cycle. Incorporated into the switch mechanism are internal stops that restrict the handle orientation to only two positions: "OPEN" and "CLOSED" (see Figure 17). The switch should be hotstick-operated and will require 15 ft-lbs. minimum input torque to operate.

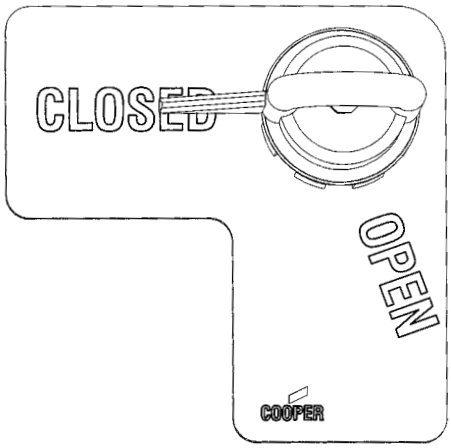

Figure 17. Two-Position Loadbreak Switch Handle and Indicator Plate.

Refer to Catalog Section 800-65 for two-position loadbreak switch ratings.

External visible loadbreak switch

⚠ CAUTION

Always fully cover and lock external visible loadbreak switch window during operation. Failure to cover and lock this window could cause personal injury. Before operating the on/off/ground switch, it is important to ensure the transformer tank has been fully grounded. Always check fluid temperature before operating loadbreak devices.

The Eaton's Cooper Power Systems external visible loadbreak switch is a great way to verify isolation of internal transformer circuitry. Having visual confirmation that the secondary bushings are de-energized saves both time and money, while providing an added safety feature. It is strongly recommended that if breaking load with this switch, the viewing window be fully covered and locked into place. Viewing this switch during operation under load could be dangerous to the human eye. The external visible loadbreak

switch is always shipped with a padlockable cover box. It is also important to remember that even after breaking load, the incoming high voltage cables are still live and dangerous.

Sectionalizing loadbreak switch

The Eaton's Cooper Power Systems sectionalizing loadbreak switch rotates 360° in either direction for alternate source selection. An externally-installed index plate prevents rotation to positions other than the one desired. The switch cannot be switched more than one position without resetting the index plate.

A spring-loaded activating mechanism ensures quick loadbreak action and positive contact engagement through all positions. Switching can be accomplished in less than one cycle, and should be performed with a hotstick. To follow are operation examples for the two most common sectionalizing switch configurations.

The following is a V-blade switch operation example (see Figure 18):

If "A" is the feeder and it is desired to switch to "B" feeder, then the V-blade switch can be rotated as follows:

1. Set index stop plate between "line A only" and "Open".
2. Rotate switch handle counterclockwise to "Open". Transformer and loop conductor are now "Open".
3. Move index plate between "Open" and "line B only".
4. Rotate switch handle counterclockwise to "line B only". Transformer is now energized for "B" feeder.

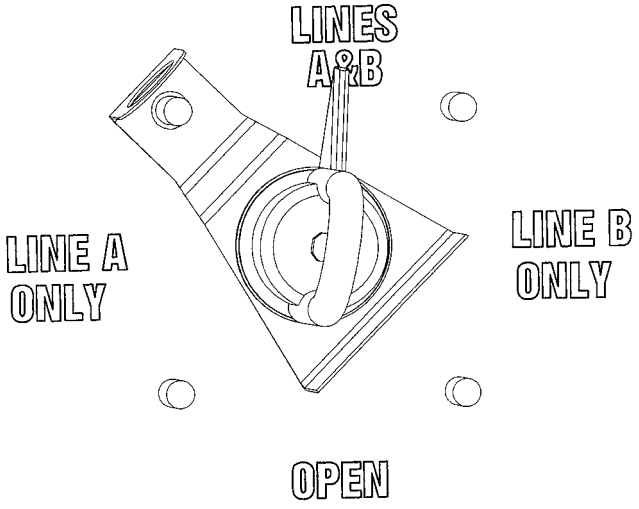

Figure 18. V-Blade Four-Position Sectionalizing Switch Handle and Index Plate.

The following is a T-blade switch operation example (see Figure 19):

If "A" is the feeder and it is desired to switch to "B" feeder, the T-blade switch can be rotated as follows:

1. Set index stop plate between "line A only" and "loop thru transformer open".
2. Rotate switch handle counterclockwise to "loop thru transformer open". The transformer is now "OPEN" and the loop conductor is electrically connected.
3. Move index plate between "loop thru transformer open"" and "line b only".
4. Rotate switch handle counterclockwise to "line b only". The transformer is now energized for "B" feeder.

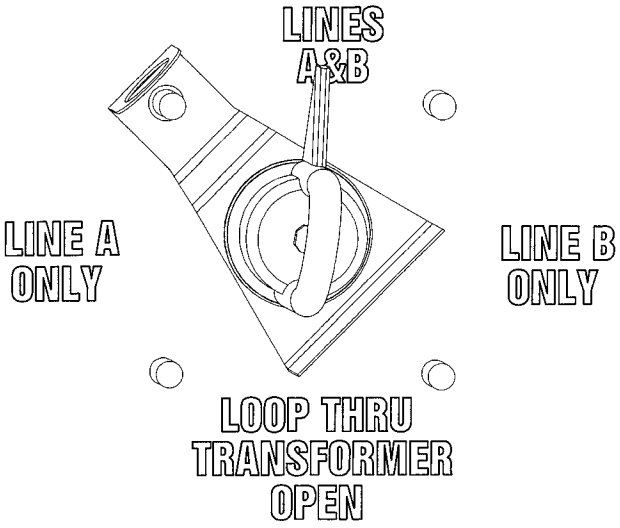

Figure 19. T-Blade Four-Position Sectionalizing Switch Handle and Index Plate.

For switch ratings and additional switch configurations refer to Catalog Section 800-64.

Tap-changer

⚠ WARNING

Hazardous voltage. Can cause severe injury, death, or damage to equipment. De-energize transformer from a remote upstream source before operating non-loadbreak tap-changers, dual-voltage switches, or delta-wye switches.

Transformers equipped with a tap-changer can be changed from one operating voltage to another. The transformer must be de-energized and grounded before the tap-changer is operated. Operating voltages accessible through use of the tap-changer are indicated on the transformer nameplate.

On most three-phase pad-mounted transformers equipped with tap-changers, the tap-changer operating handle is located on the faceplate in the high-voltage terminal compartment.

The standard style of tap-changer will have a hotstick-operable handle. There are two styles of tap-changer with this type of handle, each requiring a slightly different method for changing tap settings.

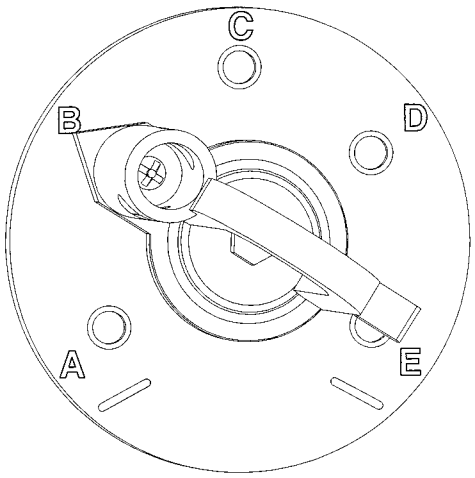

Figure 20. Hotstick-Operable Tap-Changer (Style I).

The tap-changer shown in Figure 20 can be switched to a new tap position as follows:

1. Verify that tank is grounded. De-energize transformer from a remote upstream source. Ground all bushings and terminals before operating the tap switch.
2. Back out lock screw to clear index plate.
3. Rotate handle to desired position.
4. Secure handle in its new position by tightening lock screw through index plate until it bottoms.
5. Padlocking may be accomplished through hole provided.

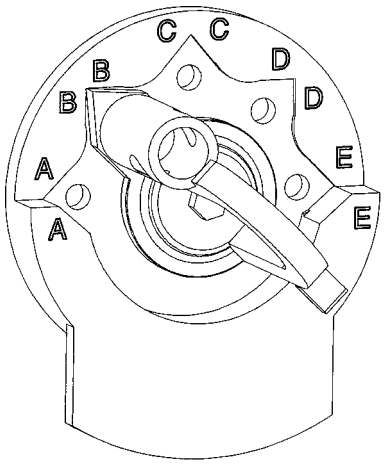

Figure 21. Hotstick-Operable Tap-Changer (Style II).

The tap-changer shown in Figure 21 can be switched to a new tap position as follows:

1. Verify that tank is grounded. De-energize transformer from a remote upstream source. Ground all bushings and terminals before operating the tap switch.
2. Back out lock screw to clear index plate.
3. Pull handle out to clear index plate.
4. Rotate handle to desired position and allow pointer to drop into slot of index plate.
5. Secure handle in its new position by tightening lock screw through index plate until it bottoms.
6. Padlocking may be accomplished through hole provided.

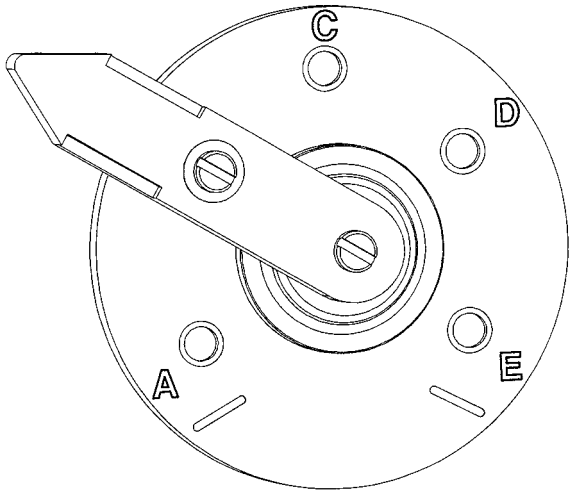

Figure 22. Lever Handle Tap-Changer.

On some transformers, tap-changers have a lever handle (see Figure 22). A lock screw secures the handle at a particular setting. Such tap-changers can be switched to a new position as follows;

1. Verify that tank is grounded. De-energize transformer from a remote upstream source. Ground all bushings and terminals before operating the tap switch.
2. Back out lock screw to clear index plate.
3. Rotate handle to desired position.
4. Secure handle in its new position by tightening lock screw through index plate until it bottoms.

Dual-voltage and delta-wye switch

⚠ WARNING

Hazardous voltage. Can cause severe injury, death, or damage to equipment. De-energize transformer from a remote upstream source before operating non-loadbreak tap-changers, dual-voltage switches, or delta-wye switches.

⚠ CAUTION

Excessive current. Can cause damage to transformer winding. When dual-voltage or delta-wye switches are set to connect transformer windings in parallel, tap-changers must be in the position shown on the transformer nameplate.

Transformers equipped for dual-voltage or delta-wye (reconnectable winding) operations usually have an externally-operable switch mounted on the faceplate in the high-voltage terminal compartment. Units combining dual-voltage and delta-wye may have two separate switches. The transformer must be de-energized and grounded before dual-voltage or delta-wye switches are operated. Attempting to change dual-voltage or delta-wye switches on an energized transformer may result in damage to the equipment and severe personal injury.

Dual-voltage windings are either connected in series (for the higher voltage) or in parallel (for the lower voltage). Dual-voltage and delta-wye switches have two positions. Switch positions are identified on the transformer nameplate and marked by corresponding numerals on the switch mounting plate.

When dual-voltage or delta-wye switches are set to connect transformer windings in parallel, tap-changers must be in the position shown on the transformer nameplate. Tap-changers cannot be used to adjust voltage when transformer windings are connected in parallel. Improper tap-changer settings will cause circulating currents in the windings, which will damage the windings and cause failure of the transformer.

To change dual winding switch settings:

The standard type of dual-voltage or delta-wye switch will have a hotstick-operable handle (see Figure 23).

This type of dual-voltage or delta-wye switch can be switched to a new position as follows:

1. Verify that tank is grounded. De-energize trans-former from a remote upstream source. Ground all bushings and terminals before operating dual-voltage or delta-wye switch.
2. Back out lock screw to clear index plate.
3. Pull handle out to clear index plate and rotate handle 90°. Drop handle into new position.
4. Secure handle in its new position by tightening lock screw through index plate until it bottoms.

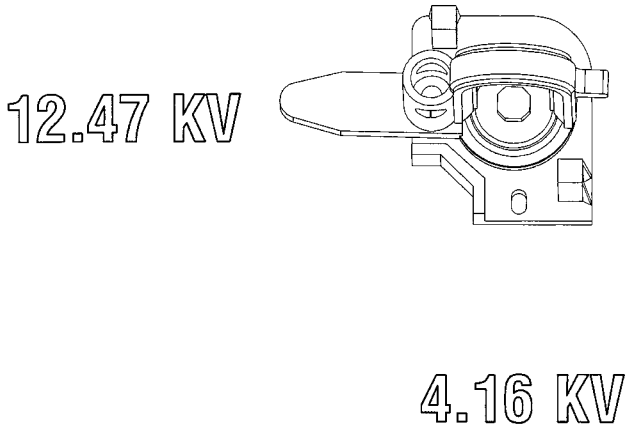

Figure 23. Dual-Voltage/Delta-Wye Switch (Hotstick-Operable).

5. Padlocking may be accomplished through hole provided.

On some transformers, dual-voltage or delta-wye switches have a lever handle (see Figure 24).

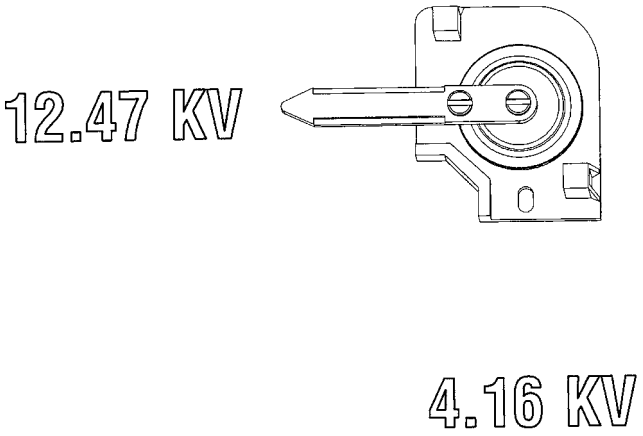

Figure 24. Dual-Voltage/Delta-Wye switch (Lever Handle).

This type of dual-voltage or delta-wye switch can be switched to a new position as follows:

1. Verify that tank is grounded. De-energize trans-former from a remote upstream source. Ground all bushings and terminals before operating dual-voltage or delta-wye switch.
2. Back out lock screw to clear index plate.
3. Rotate handle 90° to new position.
4. Secure handle in its new position by tightening lock screw through index plate until it bottoms.

Vacuum Fault Interrupter (VFI)

⚠ WARNING

Hazardous voltage. Can cause severe injury, death, or damage to equipment.

- **Do not operate loadbreak equipment if a fault condition is suspected. Doing so can cause an explosion or fire.**
- **Use a hotstick to operate transformer loadbreak equipment.**
- **After operating transformer loadbreak equipment, check that voltages at transformer terminals are the expected values. Checking voltages verifies that loadbreak equipment operated properly and that electrical circuit conditions are as expected.**
- **Before servicing transformer secondary connected equipment, verify that all transformer secondary terminals have zero voltage and ground the transformer secondary terminals following industry accepted safe grounding practices. Grounding secondary terminals protects against situations such as a standby generator energizing transformer from the secondary circuit.**
- **Before servicing transformer, ALWAYS de-energize the transformer from a remote upstream source and then proceed to ground all primary and secondary transformer terminals following industry accepted safe grounding practices. Grounding secondary terminals protects against situations such as a standby generator energizing transformer from the secondary circuit.**
- **Follow industry accepted safety practices. Utilize protective clothing and equipment when working with loadbreak equipment.**

⚠ WARNING

Three-phase pad-mounted transformers use conventional transformer oil, R-Temp fluid, or Envirotemp™ FR3™ fluid for an insulating liquid. When the insulating liquid temperature is less than -20 °C (-4 °F) for conventional transformer oil, less than 0 °C (32 °F) for R-Temp fluid or less than -10 °C (14 °F) for Envirotemp™ FR3™ fluid, viscosity is reduced, which may reduce make and break capabilities of loadbreak devices. Below these temperatures, under-oil loadbreak accessories should not be used to make or break a load. Instead, de-energize transformer from a remote upstream source before operating under-oil loadbreak devices.

IMPORTANT

For 75 °C AWR transformers, applications with maximum ambient temperatures exceeding 30 °C or loading in excess of nameplate rating, contact your Eaton's Cooper Power Systems representative.

Eaton's Cooper Power Systems VFI transformers utilize vacuum interrupters to provide fault current interruption and load make/break switching capabilities. The VFI transformer uses the same technology used in VFI Pad-Mounted Switchgear from Eaton's Cooper Power Systems.

VFI transformers can be configured for either transformer protection or loop protection. A VFI transformer with transformer protection protects the transformer and provides proper coordination with upstream protective devices. A VFI transformer with loop protection protects the loop or downstream section of a feeder. Consequently, when a fault occurs downstream, the VFI breaker trips and isolates the fault, leaving the transformer load uninterrupted.

The VFI interrupter mechanism in a VFI transformer has a hotstick-operable handle located on the faceplate of the transformer, with the operating mechanisms configured for ganged three-phase operation (see Figure 25). The VFI interrupter mechanism is opened by pulling the operation handle down to the open position. The VFI interrupter mechanism is closed by briskly pushing the handle up, into the closed position. If the VFI interrupter mechanism has tripped as the result of a fault or overload condition, the mechanism must be reset before it can be closed. To reset the mechanism, firmly pull the operation handle down toward the ground until the latch resets. After the latch has been successfully re-set, the VFI interrupter mechanism can be closed normally.

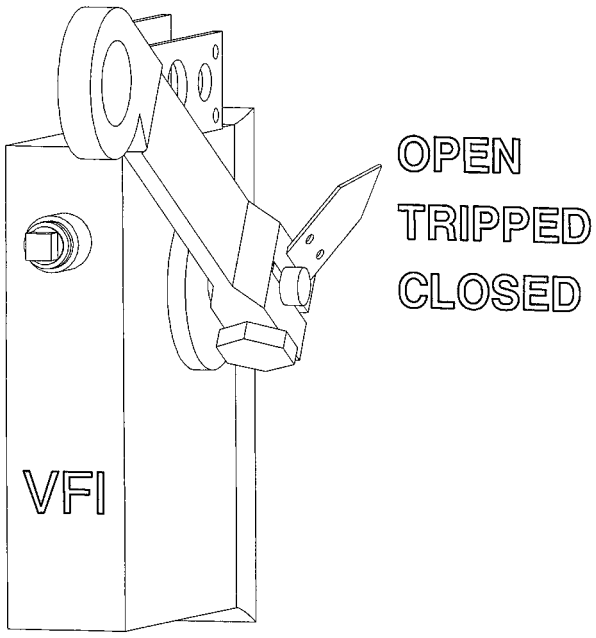

Figure 25. VFI Operating Handle.

Current-sensing transformers (CTs) located inside the VFI transformer provide line current information to the electronic control. When line current exceeds the minimum trip setting, the control initiates a signal which causes the VFI interrupter mechanism to trip and then interrupt the circuit. All three phases will open when the VFI interrupter mechanism is tripped, regardless of whether the trip was single-phase or three-phase initiated.

Refer to *Service Information S285-75-1, Tri-Phase, TPG, and TPG with SCADA Electronic Control Installation and Operation Instructions* for electronic control operation instructions.

Electrical ratings for Eaton's Cooper Power Systems VFI transformers are as follows:

Continuous Current (max) . . . . . 600 A
Interrupting Current (sym./asym.). . . . . 12 kA/20 kA
Momentary Current 10 cycles (asym.) . . . . . 20 kA
1-Second Withstand Current (sym.). . . . . 12 kA
Making Current (sym.) . . . . . 12 kA

For further information on Eaton's Cooper Power Systems VFI transformers, contact your Eaton's Cooper Power Systems representative.

Air switches (Arc-Strangler™)

⚠ WARNING

Hazardous voltage. Can cause severe injury, death, or damage to equipment.

- **Do not operate loadbreak equipment if a fault condition is suspected. Doing so can cause an explosion or fire.**
- **Use a hotstick to operate transformer loadbreak equipment.**
- **After operating transformer loadbreak equipment, check that voltages at transformer terminals are the expected values. Checking voltages verifies that loadbreak equipment operated properly and that electrical circuit conditions are as expected.**
- **Before servicing transformer secondary connected equipment, verify that all transformer secondary terminals have zero voltage and ground the transformer secondary terminals following industry accepted safe grounding practices. Grounding secondary terminals protects against situations such as a standby generator energizing transformer from the secondary circuit.**
- **Before servicing transformer, ALWAYS de-energize the transformer from a remote upstream source and then proceed to ground all primary and secondary transformer terminals following industry accepted safe grounding practices. Grounding secondary terminals protects against situations such as a standby generator energizing transformer from the secondary circuit.**
- **Follow industry accepted safety practices. Utilize protective clothing and equipment when working with loadbreak equipment.**

⚠ WARNING

Three-phase pad-mounted transformers use conventional transformer oil, R-Temp™ fluid, or Envirotemp™ FR3™ fluid for an insulating liquid. When the insulating liquid temperature is less than -20 °C (-4 °F) for conventional transformer oil, less than 0 °C (32 °F) for R-Temp fluid or less than -10 °C (14 °F) for Envirotemp™ FR3™ fluid, viscosity is reduced, which may reduce make and break capabilities of loadbreak devices. Below these temperatures, under-oil loadbreak accessories should not be used to make or break a load. Instead, de-energize transformer from a remote upstream source before operating under-oil loadbreak devices.

⚠ WARNING

Hazardous voltage. Can cause severe injury, death, or damage to equipment. Depending on configuration, Arc-Strangler fuses or switchblades may be energized even when in the "open" position. Refer to Electrical Apparatus bulletin 240-60 for further information.

Arc-Strangler loadbreaking device with NX™ fusing

NX™ full-range current-limiting fuses up to 15.5 kV can be ordered with an integral Arc-Strangler™ loadbreaking device. These in-air devices are mounted on the faceplate of the transformer. The Arc-Strangler device has the same operating characteristics as the basic NX clip-style fuse, along with loadbreaking capabilities.

The Arc-Strangler loadbreaking device is a spring-loaded sliding sleeve that extinguishes the arc drawn between the mounting contacts and the fuse conductor when the fuse is opened while load current is flowing. All magnitudes of current through the continuous current rating of the fuse can be interrupted positively and safely under proper conditions. A pullring at the top of the fuse assembly (for hotstick operation) and a hinge at the bottom complete the loadbreak device.

Arc-Strangler switchblades

Switchblades with integral Arc-Strangler loadbreaking devices are available for use in NX type fuse mountings. Arc-Strangler switchblades are designed to break load current only (up to 200 A) and do not incorporate a fuse of any type for overload or fault interruption.

Surge arresters

⚠ WARNING

Hazardous voltage. Can cause severe injury, death, or damage to equipment. De-energize transformer from a remote upstream source before servicing or operating surge arresters or disconnect switches. Check that all transformer terminals and bushings have zero voltage. Ground transformer following industry accepted safe grounding practices.

⚠ CAUTION

Excessive test voltage can damage surge arresters. Disconnect surge arresters before running impulse or applied potential tests on the transformer.

Surge arresters are used in three-phase pad-mounted transformers to protect underground distribution equipment and cable from overvoltage surges. During steady state conditions, line-to-ground voltage is applied continuously across the arrester terminals. When surges occur, the arrester immediately limits the overvoltage to the required protective level by conducting the surge current to ground. Upon passage of the surge, the arrester returns to its initial state, conducting minimal leakage current.

Surge arresters should be installed only on systems where the power frequency voltage at the arrester does not exceed published maximum continuous operating voltage (MCOV) values.

The transformer should not be tested (impulse or applied potential) with the arrester connected. If connected during impulse tests, the arrester will clamp the discharge voltage applied by the test equipment. If the arrester is connected to the transformer during an applied potential test, there is a possibility that the arrester will be damaged. Disconnect surge arresters before tests are performed on the transformer. Arresters should be reconnected immediately after tests are completed.

Under-oil MOV arrester

The Eaton's Cooper Power Systems heavy-duty distribution-class under-oil MOV arrester is designed to be mounted inside the transformer tank (see Figure 26). Internal, under-oil mounting of the arrester prevents shortened arrester life due to surface contamination, wildlife damage, vandalism, or moisture ingress.

Under-oil arresters are designed to operate when submerged in oil. It is recommended that the average oil temperature not exceed 90 °C and that the maximum oil temperature not exceed 125 °C.

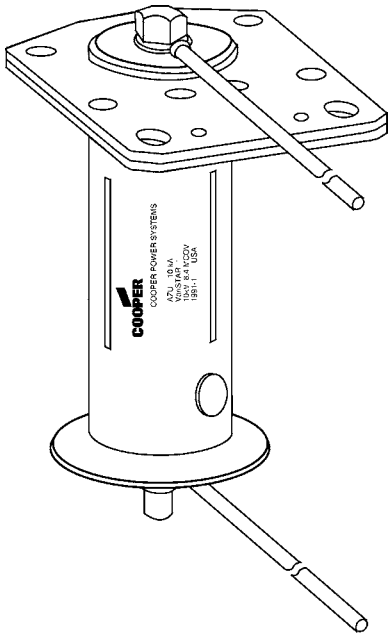

Figure 26. Heavy-Duty Distribution-Class Under-Oil MOV Arrester.

Under-oil arrester disconnection during test (with arrester disconnect switch)

The Eaton's Cooper Power Systems Arrester Disconnector provides a means of disconnecting and reconnecting an under-oil arrester ground for transformer testing. Separate disconnectors are used for each arrester in the transformer, and are located on the transformer faceplate.

The arrester disconnector is operated as follows:

Operating from closed to open position (see Figure 27):

1. Verify that tank is grounded. De-energize transformer from a remote upstream source. Ground all bushings and terminals.
2. Unscrew handle from shaft.
3. Re-attach small diameter end of handle to shaft.
4. Push handle and shaft toward transformer until shaft flange (adjacent to handle) is flush to sealing gland.
5. Transformer is now ready for Impulse or Applied Potential testing.

Operating from open to closed position:

1. Verify that tank is grounded. De-energize transformer from a remote upstream source. Ground all bushings and terminals.
2. Pull handle and shaft away from transformer completely.
3. Unscrew handle and re-attach with large diameter end toward the transformer. To assure good ground contact, the handle should be re-tightened by rotating handle 3/4 to 1 turn after handle has come in contact with seal gland.

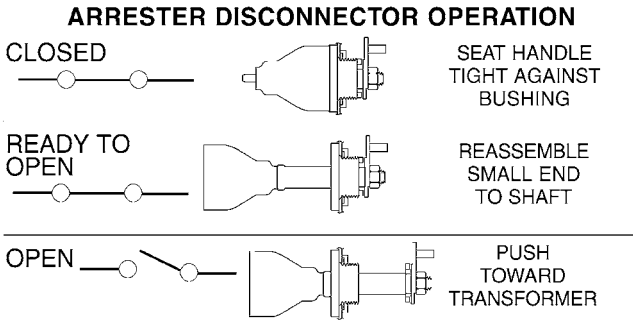

Figure 27. Arrester Disconnector Operation.

Under-oil arrester disconnection during test (without arrester disconnect switch)

CAUTION

Before opening the transformer tank for internal maintenance, read the Insulating Liquid Maintenance section in this manual. This section explains safety precautions that should be taken and gives instructions on how to prevent insulating liquid contamination.

To disconnect arresters without a disconnect switch:

1. Verify that tank is grounded. De-energize transformer from a remote upstream source. Ground all bushings and terminals.
2. Remove tank cover following procedures in Tank Cover Removal and Installation section of this manual.
3. Locate arrester ground lead pad (see Figure 28) attached to tank wall.
4. Disconnect arrester ground leads from ground lead pad and separate leads ends a minimum of 5" from each other and from any part of the transformer.
5. Transformer is now ready for impulse or applied potential testing.

To reconnect:

1. Reconnect arrester ground leads to ground lead pad.
2. Re-install tank cover as outlined in Tank Cover Removal and Installation section of this manual.

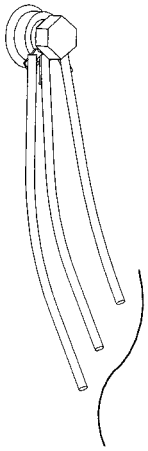

Figure 28. Under-oil Arrester Jumper Ground Lead Pad with Ground Leads.

External arrester

External surge arresters ordered with the transformer must be installed and connected in the field before the transformer is put into service.

Arrester and tank ground connections must be completed before the transformer is connected to the high-voltage or low-voltage lines. Proper connection places the arrester in a direct shunt relationship to the transformer insulation.

Maintenance

Exterior maintenance

On an annual or more frequent interval, inspect all exposed surfaces for evidence of tampering, battered metal, gouges, etc. Dents or deformities should be repaired at once. Scratched or weathered paint or protective coatings should be touched up promptly.

Keep the area around the transformer clean. Do not store tools, materials or equipment on or against the transformer.

Cabinet interior maintenance

⚠ WARNING

Hazardous voltage. Can cause severe injury, death, or damage to equipment. De-energize transformer from a remote upstream source before opening cabinet and doing cabinet interior inspection or maintenance. Check that all transformer terminals and bushings have zero voltage. Ground transformer following industry accepted safe grounding practices.

Periodically inspect the terminal compartment interior and all operating equipment. Check all gauges and controls for proper operation. Repair or replace damaged or defective equipment.

Inspect drain cocks, plugs, fuse mountings, and switches. Look for evidence of insulating liquid seepage around tank-wall gaskets, seals, etc. Repair as required.

Replacement of gaskets or seals in the tank wall may require that the tank be opened and the insulating liquid lowered to the appropriate level. For instruction on opening the tank and for draining and replacing the insulating liquid, refer to the Insulating Liquid Maintenance section in this manual.

Tank internal maintenance

(For Envirotran™ Transformers see the Envirotran Transformers section of this manual before continuing)

⚠ CAUTION

Elevated Pressure. Can cause personal injury or damage to transformer. Release internal pressure with pressure relief device before removing tank cover, manhole cover or handhole cover.

⚠ WARNING

Hazardous voltage. Can cause severe injury, death, or damage to equipment. De-energize transformer from a remote upstream source before opening cabinet and doing internal tank inspection or maintenance. Check that all transformer terminals and bushings have zero voltage. Ground transformer following industry accepted safe grounding practices.

Service to bushings or equipment inside the transformer tank will require that the tank be opened and the insulating liquid lowered to the appropriate level. Before opening the transformer tank, read the Insulating Liquid Maintenance section in this manual. The Liquid Maintenance section explains safety precautions that should be taken and gives instructions on how to prevent insulating liquid contamination. Precautions must be taken to prevent dirt or moisture from entering the opened transformer tank. Contamination of the insulating liquid will prevent the transformer from operating properly and may cause serious damage to the transformer.

Three-phase pad-mounted transformers may have either bolt-on or weld-on main tank covers. Bolt-on covers can be removed to access the tank interior. Access to the interior of a transformer with a weld-on tank cover is typically through a manhole/handhole. To gain additional internal access to tanks with weld-on tank covers, the tank cover must be cut open.

Tank cover removal and installation

(For Envirotran Transformers see the Envirotran Transformers section of this manual before continuing)

⚠ CAUTION

Elevated Pressure. Can cause personal injury or damage to transformer. Release internal pressure with pressure relief device before removing tank cover, manhole cover or handhole cover.

⚠ WARNING

Hazardous voltage. Can cause severe injury, death, or damage to equipment. De-energize transformer from a remote upstream source before opening cabinet and doing internal tank inspection or maintenance. Check that all transformer terminals and bushings have zero voltage. Ground transformer following industry accepted safe grounding practices.

Transformers that have been system-connected should be de-energized, grounded, and disconnected before being opened for inspection.

If the tank seal is broken, it is recommended that a leak test be performed to verify that the tank is properly sealed. To leak test, remove the pressure relief device and pressurize the headspace. The test pressure should not exceed 7 psig. The established pressure should be maintained for at least four hours to insure that all the seals are proper.

Bolt-On tank cover removal

Transformer tanks are factory-sealed to prevent ingress of ambient air and moisture. Do not open under any precipitation conditions.

1. Verify that tank is grounded. De-energize transformer from a remote upstream source. Ground all bushings and terminals before removing cover.
2. Thoroughly clean tank cover to help prevent contamination of insulating liquid when removing the cover. Remove all dirt, grease, and moisture.
3. From within the cabinet, remove the hardware (3/8" nuts using a 9/16" socket) which attaches the cover nutguard to the faceplate.
4. Relieve internal tank pressure by operating the pressure relief valve. Remove the hardware (3/8" nuts using a 9/16" socket) which attaches the cover to the tank.
5. Gently pry the cover upward. Do not allow the cover gasket to come in contact with the transformer insulating liquid. Allowing the gasket to contact the liquid will make it slippery and difficult to hold in position during cover installation. Lift cover straight up to prevent damage to cover, bolts, and tank gasket.
6. Note the location and orientation (up/down) of each gasket section as they are removed from the tank flange so that they can be reinstalled properly.

Bolt-On tank cover installation

1. Return the gasket sections to their original positions and orientation.
2. Re-install the cover, using 25 ft-lbs. torque to tighten the cover hardware. After installing all the nuts, re-torque each nut to ensure proper torque is achieved.
3. Remove the pressure relief valve and pressurize the headspace through the pressure relief valve coupling to ensure that there are no leaks. Test pressure should not exceed 7 psig. Established pressure should be maintained for at least four hours to insure that all seals are proper.
4. Re-install the nutguard using 25 ft-lbs. torque to tighten nutguard access hardware.
5. Re-install pressure relief valve.

Bolt-On manhole/handhole cover removal

Transformer tanks are factory-sealed to prevent ingress of ambient air and moisture. Do not open under any precipitation conditions.

1. Verify that tank is grounded. De-energize transformer from a remote upstream source. Ground all bushings and terminals before removing cover.
2. From within cabinet, remove hardware (3/8" nuts using a 9/16" socket) attaching manhole/handhole access cover to cabinet.
3. Remove manhole/handhole access cover.
4. Thoroughly clean tank and manhole/handhole cover to help prevent contamination of insulating liquid when removing manhole/handhole cover. Remove all dirt, grease, and moisture.
5. Relieve internal tank pressure by operating pressure relief valve.
6. Remove hardware (3/8" nuts using a 9/16" socket) attaching manhole/handhole cover to tank.
7. Gently pry cover upward. Do not allow cover gasket to come in contact with transformer insulating liquid. Allowing the gasket to contact the liquid will make it slippery and difficult to hold in position during cover installation. Lift cover straight up to prevent damage to cover, bolts, and tank gasket.
8. Note location and orientation (up/down) of each gasket section as they are removed from tank flange so they can be re-installed properly.

Bolt-On manhole/handhole cover installation

1. Return gasket sections to their original positions and orientation.
2. Re-install manhole/handhole, using 25 ft-lbs. torque to tighten hardware. After installing all nuts, re-torque each nut to ensure proper torque is achieved.
3. Remove pressure relief valve and pressurize headspace through pressure relief valve coupling to ensure that there are no leaks. Test pressure should not exceed 7 psig. Established pressure should be maintained for at least four hours to ensure that all seals are proper.
4. Re-install access cover using 25 ft-lbs. torque to tighten access cover hardware.
5. Re-install pressure relief valve.

Weld-On tank cover removal

⚠ WARNING

Explosive gas. Can cause severe injury, death, or damage to equipment. Before cutting open a weld-on tank cover, fill tank headspace with nitrogen gas. Keep nitrogen gas flowing while cutting. Keep tank headspace filled with nitrogen until cutting is finished.

Transformer tanks are factory-sealed to prevent ingress of ambient air and moisture. Do not open under any precipitation conditions.

Explosive gases can develop inside a transformer tank headspace during the life of the transformer. It is strongly recommended that weld-on cover removal be done only in a controlled repair facility by experienced maintenance personnel. To prevent explosions, the following procedures must be followed during weld-on cover removal:

1. Verify that tank is grounded. De-energize transformer from a remote upstream source. Ground all bushings and terminals before removing cover.
2. Relieve internal tank pressure by operating pressure relief valve.
3. Remove manhole/handhole cover as outlined in the Tank Cover Removal and Installation section of this manual.
4. Drain insulating liquid to the top of core clamp as outlined in the Insulating Liquid Maintenance section of this manual.
5. Allow transformer to sit with manhole/handhole removed for a minimum of 24 hours to allow explosive gases to escape.
6. Place a rubberized blanket on top of core clamp and completely cover core/coil assembly to protect core/coil assembly from weld spatter contamination during cover cutting.
7. Remove pressure relief valve and attach a nitrogen source in its place.
8. Fill headspace with nitrogen with manhole/ handhole cover still removed. Nitrogen gas will help prevent a volatile gas explosion while tank cover is being cut off.
9. While continuing to keep nitrogen flowing into the headspace, use carbon air arc machinery or a hard-wheel grinder to cut cover weld.
10. Thoroughly clean tank cover to help prevent contamination of insulating liquid when removing cover. Remove all dirt, grease, and moisture.
11. Remove tank cover from tank.

Weld-On tank cover installation

1. Grind smooth and then clean cover, removing all weld spatter accumulated during cover removal.
2. It is recommended that the tank weld rope gasket be replaced around the tank lip prior to re-installing cover. The tank weld rope gasket helps prevent weld spatter from entering the tank during cover weld. The rubberized blanket installed during cover removal should still be covering the core/coil assembly.
3. Re-position cover on tank.
4. Fill headspace with nitrogen through pressure relief valve coupling, with manhole/handhole still removed.
5. Continue to keep nitrogen source flowing into headspace, and weld cover fully around the tank lip.
6. Remove rubberized blanket that was installed during cover removal.
7. Refill insulating liquid as outlined in Insulating Liquid Maintenance section of this manual.
8. Re-install manhole/handhole cover as outlined in Tank Cover Removal and Installation section of this manual.
9. Pressurize headspace through pressure relief valve coupling to insure that there are no leaks. The test pressure should not exceed 7 psig. The established pressure should be maintained for at least four hours to ensure that all seals are proper.
10. Re-install pressure relief valve.

Bushing removal and replacement

1. Verify that tank is grounded. De-energize transformer from a remote upstream source. Ground all bushings and terminals before performing maintenance on bushings.
2. Open tank by removing tank cover or manhole/ handhole cover as outlined in Tank Cover Removal and Installation section of this manual.
3. Lower insulating liquid level as outlined in Insulating Liquid Maintenance section of this manual. Lower liquid level to completely expose the bushing.
4. Disconnect all internal and external cable and leads. Note position of all nuts, flat washers, spring washers, etc., so they can be re-installed in same locations.
5. Remove all bushing clamp hardware, noting position of all nuts, flat washers, spring washers, etc., so they can be re-installed in same locations.
6. Remove external bushing clamp, bushing, and gasket.
7. Install a new bushing and gasket. Center bushing and gasket to obtain an effective seal. Install exterior bushing clamp and clamp hardware. Tighten clamp nuts per torque specified in Table 1.
8. Re-connect all external and internal cables and leads. Replace all nuts, flat washers, spring washers, etc., in their original position. Tighten all connections per torque specified in Table 1.
9. Restore insulating liquid to appropriate level as outlined in Insulating Liquid Maintenance section of this manual. Close, reseal, and leak test tank as outlined in the Tank Cover Removal and Installation section of this manual. Inspect bushing-to-tank seal for leaks or seepage.

Cabinet removal and installation

Cabinet removal

⚠ CAUTION

Potential Falling Object. Can cause personal injury or damage to transformer. Do not open cabinet doors when cabinet is removed from transformer tank. Opening cabinet doors will cause cabinet to fall forward.

⚠ WARNING

Hazardous voltage. Can cause severe injury, death, or damage to equipment. De-energize transformer from a remote upstream source before opening cabinet and doing cabinet interior inspection or maintenance. Check that all transformer terminals and bushings have zero voltage. Ground transformer following industry accepted safe grounding practices.

Table 1. Bushing Hardware Tightening Torque

Bushing Clamps	
Clamp Type	**Hardware Tightening Torque**
Cast Aluminum Clamp	70-80 in-lbs.
Molded Polymer Tri-Clamp	40-60 in-lbs.
All other 3 & 4 hole Clamps	40-60 in-lbs.

Bushings With Internal Spade Connections	
Bushing Hardware	**Hardware Tightening Torque**
1/2" Steel (Grade 8)	50 ft-lbs.
3/8" Steel (Grade 8)	50 ft-lbs.

Bushings With Internal Stud Connections	
Bushing Hardware	**Hardware Tightening Torque**
3/8"-16 Brass Nuts	16 ft-lbs.
5/8"-11 Aluminum Nuts	60 ft-lbs.
5/8"-11 Brass Nuts	75 ft-lbs.
1"-14 Brass Nuts	121 ft-lbs.
Bushing Lead Block, 1/2" Steel Hardware	110 ft-lbs.

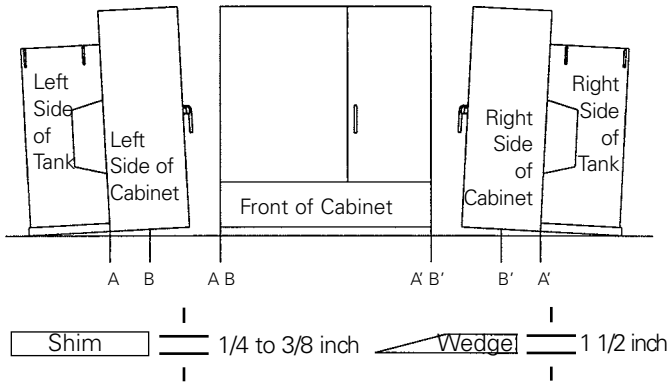

Figure 29. Cabinet Removal Diagram.

1. Verify that tank is grounded. De-energize transformer from a remote upstream source. Ground all bushings and terminals before performing maintenance on cabinet.
2. Place one 1/4 to 3/8 inch shim directly below faceplate on both sides of tank at points A and A' (see Figure 29).
3. Place one 1 1/2 inch wedge under each side of cabinet at points B and B' to relieve strain on the cabinet.
4. Note position and orientation of gasket that is between top of cabinet and tank so it can be re-installed in same fashion.
5. Disconnect HV-LV barrier from vertical bracket of faceplate.

6. Remove hardware attaching cabinet to faceplate on left and right sides of faceplate. Note position of all nuts, flat washers, spring washers, etc., so they can be re-installed in same locations.
7. Fully close HV and LV doors.
8. Slide cabinet assembly away from tank.

Cabinet installation

Reverse removal procedure to re-install cabinet. Re-attach cabinet using shims under front of tank and wedges under sides of cabinet, making sure cabinet gasket is inserted into cabinet back channel prior to attaching cabinet. Tighten cabinet hardware to 20 ft-lbs. torque.

Insulating liquid maintenance

Transformer tanks are factory-sealed to prevent ingress of ambient air and moisture. Do not open under any precipitation conditions.

If it is necessary to drain and refill the transformer, special care should be taken to avoid the entrapment of gas bubbles in the system. Gas bubbles have lower dielectric integrity than the insulating liquid and will degrade the performance characteristics of the insulating system.

Conventional oil-filled transformers

Refer to IEEE Std C57.106™-2002 standard, "Guide For Acceptance and Maintenance of Insulating Oil in Equipment", for additional guidelines when testing and handling conventional transformer oil. Periodic maintenance tests should be performed.

R-Tran™ transformers

R-Tran™ transformers are filled with R-Temp fluid. R-Temp fluid is a non-toxic, readily biodegradable, less-flammable (high fire point), high molecular weight hydrocarbon dielectric fluid.

Refer to IEEE Std C57.121™-1998 standard, "Guide for Acceptance and Maintenance of Less Flammable Hydrocarbon Fluids in Transformers." Periodic maintenance tests should be performed on the same schedule as would be used for transformers of similar application filled with conventional transformer oil.

Contact your Eaton's Cooper Power Systems representative for additional handling guidelines for R-Temp fluid.

Mixtures of R-Temp fluid and conventional transformer oil

R-Temp fluid is fully miscible with conventional transformer oil. There is no known detrimental performance impact when R-Temp fluid is mixed with conventional transformer oil. Conversely, except for some reduction in flash and fire points, the same is true for conventional transformer oil mixed with R-Temp fluid. Conventional transformer oil content of >3% in R-Temp fluid lowers the fire point below 300 °C. Measure the ASTM flash and fire points if the presence of conventional transformer oil is suspected. If flash or fire points fall below the minimum values required, retrofilling may be required.

Envirotran™ transformers

Envirotran™ transformers are filled with Envirotemp™ FR3™ fluid. Envirotemp™ FR3™ fluid is a less-flammable (high fire point) dielectric fluid based on edible seed oils.

Periodic maintenance should be performed on the same schedule as would be used for transformers of similar application filled with conventional transformer oil. Basic recommended tests for Envirotemp™ FR3™ fluid are dielectric strength, moisture content, and flash and fire points.

Envirotran transformer tanks are shipped from the factory with a dry nitrogen-filled headspace. Internal pressure should not be equalized with atmosphere by manually opening the pressure relief valve device unless access to Bay-O-Net fuses or other internal tank components is required.

If internal service is required

If the tank cover or manhole/handhole must be removed for internal service, exposure time to ambient air should be minimized. Avoid exposure times greater than 24 hours. Immediately after service is completed, replace the cover or manhole/handhole. The tank headspace must then be purged and recharged with dry nitrogen. Envirotran transformers are equipped with two 1/4" fill valves on the upper left and upper right corners of the face plate and are intended for the recharging process. The following steps should be followed when purging and recharging Envirotran transformers:

1. Verify that tank is grounded. De-energize transformer from a remote upstream source. Ground all bushings and terminals.
2. Release internal pressure by operating pressure relief device.
3. Fill headspace with dry nitrogen through one of the 1/4" fill valves to a pressure of 2-3 psig.
4. Release internal pressure by operating pressure relief device.
5. Refill headspace with dry nitrogen through one of the 1/4" fill valves to a pressure of 2-3 psig. Internal pressure must be maintained for at least four hours prior to transformer energization to verify seal integrity.

Bay-O-Net fuse replacement

When replacing fuses in Flapper™ style Bay-O-Net fuse assembles, refer to Bay-O-Net Fuse Re-Fusing Instructions in this manual. Follow the same procedure as with conventional oil-filled transformers.

Operation

Transformers from Eaton's Cooper Power Systems are designed to operate at rated load with a temperature rise equal to or less than the temperature rise printed on the transformer's nameplate. Operating transformers in excess of IEEE Std C57.91™-2011 standard will result in accelerated loss of insulation system life. The coil insulation has been carefully made with thermally-upgraded materials to ensure long life at rated loads. Severe and prolonged overloads of mineral oil-filled transformers will result in overheating and accelerated aging of the insulation, which may lead to premature failure®. PEAK™ transformers have extended life and can be operated at overload conditions while still exceeding ANSI standard insulation life.

Mixtures of Envirotemp™ FR3™ fluid and conventional transformer oil

Envirotemp™ FR3™ fluid is fully miscible with conventional transformer oil. There is no known detrimental performance impact when Envirotemp™ FR3™ fluid is mixed with conventional transformer oil. Conversely, except for some reduction in flash and fire points, the same is true for conventional transformer oil mixed with Envirotemp™ FR3™ fluid. Conventional transformer oil content of >7% in Envirotemp™ FR3™ fluid lowers the fire point below 300 °C. Measure the ASTM flash and fire points if the presence of conventional transformer oil is suspected. If flash or fire points fall below the minimum values required, retrofilling may be required. To maintain its exceptional environmental classification, mixing of Envirotemp™ FR3™ dielectric coolant with any other fluids should be avoided.

Contact your Eaton's Cooper Power Systems representative for additional handling guidelines for Envirotemp™ FR3™ fluid.

Sampling insulating liquid

Before sampling the insulating liquid, verify that the tank is grounded. De-energize the transformer from a remote upstream source. Ground the bushings and terminals.

Refer to ASTM D923 "Standard Practices for Sampling Electrical Insulating Liquids" for sampling techniques.

A sample of the liquid should be taken when the liquid temperature is equal to or greater than the surrounding air to avoid condensation of moisture on the liquid.

Containers used for sampling liquid should be clean and dry large mouth glass bottles. Make sure that the liquid being sampled is representative of the liquid in the unit. Sufficient liquid must first be drawn off to ensure that the sample will be from the bottom of the tank, and not the liquid stored in the sampling pipe

Testing insulating liquid

For the dielectric strength of the insulating liquids, follow the technique as specified by ASTM D877, "Standard Test Method for Dielectric Breakdown Voltage of Insulating Liquids Using Disk Electrodes".

If the dielectric strength of the liquid drops below 26 kV, it should be filtered until it tests at 26 kV or better.

Filtering insulating liquid

Conventional transformer oil, R-Temp, or Envirotemp™ FR3™ fluids can be filtered by means of a filter press. The filter press is effective for removing all types of foreign matter, including finely divided carbon and small amounts of moisture. The purifier equipment consists of a specifically proportioned filter press, a positive volume gear pump, driving motor, combined drip pan and mixing tank, necessary piping, valves, strainer, gauges and drying oven. Follow manufacturer's instructions for purifier equipment operation.

Filtration should be continued until the dielectric test of the insulating liquid is 26 kV or better.

When filtering R-Temp or Envirotemp™ FR3™ fluid, the filtering equipment must be free of contaminants and other liquids. The presence of other liquids may alter the physical and electrical characteristics of R-Temp or Envirotemp™ FR3™ fluid. This could result in a reduction of fire point.

Lowering insulating liquid level

1. Verify that tank is grounded. De-energize transformer from a remote upstream source. Ground all bushings and terminals.
2. If cover removal is required, remove cover as outlined in Tank Cover Removal and Installation section of this manual.
3. Prepare a clean, dry storage container to receive liquid.
4. Use pumps and hoses that have not been contaminated by contact with dissimilar liquids. Use a metal or non-rubber hose. Oil dissolves the sulfur found in rubber and will prove harmful to conductor material.
5. Attach pump intake line to drain valve on transformer tank.
6. Place output line nozzle on bottom of storage container. Do not permit liquid to splash into receiving container. Splashing will introduce air and moisture into liquid.
7. Do not lower liquid below top of core clamp unless absolutely necessary. Exposing coils may allow moisture to contaminate coil insulation.

Restoring insulating liquid level

If it is necessary to drain and refill the transformer, special care should be taken to avoid the entrapment of gas bubbles in the system. Sufficient time should be allowed

CAUTION

It may be necessary to add extra liquid to the storage container from a reserve supply to replace the small quantity lost in the pump and lines and to prevent aeration of replacement liquid.

between refilling and energization of the transformer to be sure that any gas bubbles created during the process have been dissipated.

1. Pump from bottom of temporary storage tank. Do not permit intake line to draw in air, since air bubbles will lower dielectric integrity of insulating system.
2. To prevent aeration at hose output, locate hose output below liquid surface
3. Pump slowly. If tank cover is not attached to tank, fill transformer to fill line marked on inside of transformer faceplate. If the tank cover is attached to tank, liquid level gauge may be read directly. On transformers that are not gauge-equipped, liquid level should be filled to bottom edge of liquid level plug hole (see Figure 3).

Applicable standards

1. ASTM D92, "Standard Test Method for Flash and Fire Points by Cleveland Open Cup."
2. ASTM D877, "Standard Test Method for Dielectric Breakdown Voltage of Insulating Liquids Using Disk Electrodes."
3. ASTM D923, "Standard Practices for Sampling Electrical Insulating Liquids."
4. IEEE Std C57.106™-2002 standard, "Guide For Acceptance and Maintenance of Insulating Oil in Equipment."
5. IEEE Std C57.121™-1998 standard, "Guide for Acceptance and Maintenance of Less Flammable Hydrocarbon Fluids in Transformers."

Spare parts and service

We suggest that one spare set of gaskets for manhole/handhole and any gasket-type bushings be kept on hand. Other renewal parts may be ordered through your Eaton's Cooper Power Systems representative. When ordering parts, describe to your Eaton's Cooper Power Systems representative the maintenance being performed or the problem experienced. Also, tell the Eaton's Cooper Power Systems representative the complete transformer catalog number and serial number listed on the transformer nameplate.



Eaton
1000 Eaton Boulevard
Cleveland, OH 44122
United States
Eaton.com

Eaton's Cooper Power Systems Business
2300 Badger Drive
Waukesha, WI 53188
cooperpower.com

© 2013 Eaton
All Rights Reserved
Printed in USA
Publication No. S210-12-1 / August 2013

Eaton, Cooper Power Systems, Arc-Strangler, NX, R-Tran, Envirotran, Flapper, PEAK, and R-Temp are valuable trademarks of Eaton, in the U.S. and other countries. You are not permitted to use these trademarks without the prior written consent of Eaton.
Envirotemp™ and FR3™ are licensed trademarks of Cargill, Incorporated.
IEEE Std C57.121™-1998, IEEE Std C57.106™-2002, and IEEE Std C57.91™-2011 standards are trademarks of the Institute of Electrical and Electronics Engineers, Inc., (IEEE). This publication/product is not endorsed or approved by the IEEE.
ANSI® is a registered trademark of the American National Standards Institute.
National Electrical Code® and NEC® are registered trademarks of the National Fire Protection Association, Inc.

Technical Data **210-12**

Effective August 2013
Supersedes August 2012

Three-phase pad-mounted compartmental type transformer



General

At Eaton's Cooper Power Systems, we are constantly striving to introduce new innovations to the transformer industry, bringing you the highest quality, most reliable transformers. Eaton's Cooper Power Systems Transformer Products are ISO 9001 compliant, emphasizing process improvement in all phases of design, manufacture, and testing. In order to drive this innovation, we have invested both time and money in the Thomas A. Edison Technical Center, our premier research facility in Franksville, Wisconsin. Headquarters for the Systems Engineering Group of Eaton's Cooper Power Systems, such revolutionary products as distribution-class UltraSIL™ Polymer-Housed Evolution™ surge arresters and Envirotemp™ FR3™ fluid have been developed at our Franksville lab.

With transformer sizes ranging from 45 kVA to 12 MVA and high voltages ranging from 2400 V to 46 kV, Eaton's Cooper Power Systems has you covered. From fabrication of the tanks and cabinets to winding of the cores and coils, to production of arresters, switches, tap changers, expulsion fuses, current limit fuses, bushings (live and dead) and molded rubber goods, Eaton's Cooper Power Systems does it all. Eaton's Cooper Power Systems transformers are available with electrical grade mineral oil or Envirotemp™ FR3™ fluid, a less-flammable and bio-degradable fluid. Electrical codes recognize the advantages of using Envirotemp™ FR3™ fluid both indoors and outdoors for fire sensitive applications. The bio-based fluid meets Occupational Safety and Health Administration (OSHA) and Section 450.23 NEC Requirements.

Cooper Power Systems
by EATON

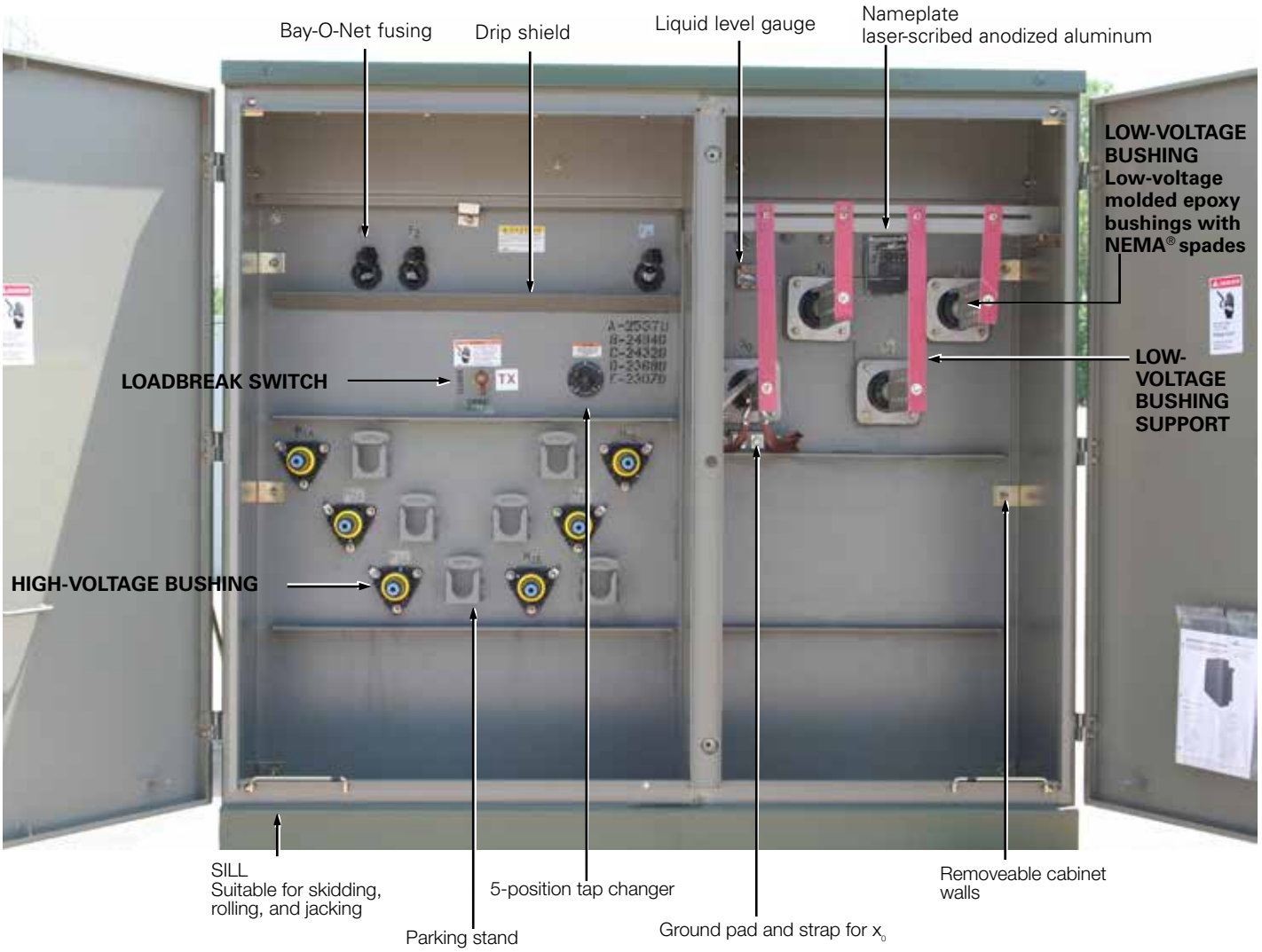

Figure 1. Three-phase pad-mounted compartmental type transformer.

Table 1. Product Scope

Type	Three Phase, 50 or 60 Hz, 65 °C Rise (55 °C, 55/65 °C), 65/75 °C, 75 °C
Fluid Type	Mineral oil or Envirotemp™ FR3™ fluid
Coil Configuration	2-winding or 4-winding or 3-winding (Low-High-Low), 3-winding (Low-Low-High)
Size	45 – 12,000 kVA
Primary Voltage	2,400 – 46,000 V
Secondary Voltage	208Y/120 V to 14,400 V
Specialty Designs	Inverter/Rectifier Bridge
	K-Factor (up to K-19)
	Vacuum Fault Interrupter (VFI)
	UL® Listed & Labeled and Classified
	Factory Mutual (FM) Approved®
	Solar/Wind Designs
	Differential Protection
	Seismic Applications (including OSHPD)
	Hardened Data Center

Table 2. Three-Phase Ratings

Three-Phase 50 or 60 Hz
kVA Available[1]: 45, 75, 112.5, 150, 225, 300, 500, 750, 1000, 1500, 2000, 2500, 3000, 3750, 5000, 7500, 10000, 12000

[1]Transformers are available in the standard ratings and configurations shown or can be customized to meet specific needs.

Table 3. Audible Sound Levels

	NEMA® TR-1 Average
Self-Cooled, Two Winding kVA Rating	Decibels (dB)
45-500	56
501-700	57
701-1000	58
1001-1500	60
1501-2000	61
2001-2500	62
2501-3000	63
3001-4000	64
4001-5000	65
5001-6000	66
6001-7500	67
7501-12000	68

Table 4. Insulation Test Levels

KV Class	Induced Test 180 or 400 Hz 7200 Cycle	kV BIL Distribution	Applied Test 60 Hz (kV)
1.2	TWICE RATED VOLTAGE	30	10
2.5		45	15
5		60	19
8.7		75	26
15		95	34
25 (grd Y Only)		125	40
25		150	50
34.5 (grd Y Only)		125	40
34.5		150	70
46		200	95

Table 5. Temperature Rise Ratings 0-3300 Feet (0-1000 meters)

	Standard	Optional
Unit Rating (Temperature Rise Winding)	65 °C	55 °C, 55/65 °C, 75 °C
Ambient Temperature Max	40 °C	50 °C
Ambient Temperature 24 Hour Average	30 °C	40 °C
Temperature Rise Hotspot	80 °C	65 °C

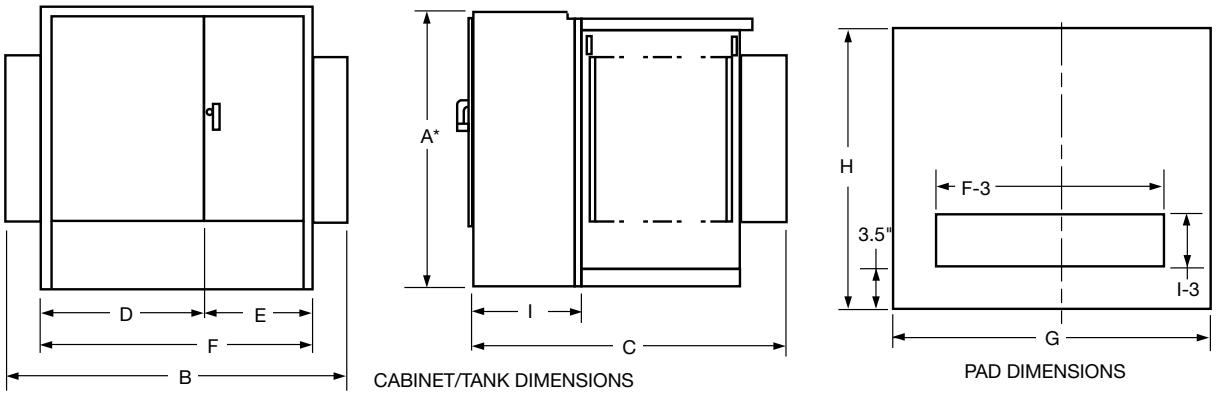

Figure 2. Transformer and pad dimensions.

* Add 9" for Bay-O-Net fusing.

Table 6. Fluid-filled—aluminum windings 55/65 °C Rise[1]

65° Rise	DEAD-FRONT—LOOP OR RADIAL FEED—BAY-O-NET FUSING OIL FILLED—ALUMINUM WINDINGS										
	OUTLINE DIMENSIONS (in.)									Gallons of	Approx. Total
kVA Rating	A*	B	C	D	E	F	G	H	I	Fluid	Weight (lbs.)
45	50	68	39	42	26	68	72	43	20	110	2,100
75	50	68	39	42	26	68	72	43	20	115	2,250
112.5	50	68	49	42	26	68	72	53	20	120	2,350
150	50	68	49	42	26	68	72	53	20	125	2,700
225	50	72	51	42	30	72	76	55	20	140	3,150
300	50	72	51	42	30	72	76	55	20	160	3,650
500	50	89	53	42	30	72	93	57	20	190	4,650
750	64	89	57	42	30	72	93	61	20	270	6,500
1000	64	89	59	42	30	72	93	63	20	350	8,200
1500	73	89	86	42	30	72	93	90	24	410	10,300
2000	73	72	87	42	30	72	76	91	24	490	12,500
2500	73	72	99	42	30	72	76	103	24	530	14,500
3000	73	84	99	46	37	84	88	103	24	620	16,700
3750	84	85	108	47	38	85	88	112	24	660	19,300
5000	84	96	108	48	48	96	100	112	24	930	25,000
7500	94	102	122	54	48	102	100	126	24	1,580	41,900

1 Weights, gallons of fluid, and dimensions are for reference only and not for construction. Please contact Eaton's Cooper Power Systems for exact dimensions.

* Add 9" for Bay-O-Net fusing.

Table 7. Fluid-Filled—Copper Windings 55/65 °C Rise[1]

65° Rise	DEAD-FRONT—LOOP OR RADIAL FEED—BAY-O-NET FUSING OIL FILLED—COPPER WINDINGS										
	OUTLINE DIMENSIONS (in.)									Gallons of	Approx. Total
kVA Rating	A*	B	C	D	E	F	G	H	I	Fluid	Weight (lbs.)
45	50	64	39	34	30	64	69	43	20	110	2,100
75	50	64	39	34	30	64	69	43	20	115	2,350
112.5	50	64	49	34	30	64	69	53	20	115	2,500
150	50	64	49	34	30	64	69	53	20	120	2,700
225	50	64	51	34	30	64	73	55	20	140	3,250
300	50	64	51	34	30	64	75	55	20	160	3,800
500	50	81	53	34	30	64	85	57	20	200	4,800
750	64	89	57	42	30	72	93	61	20	255	6,500
1000	64	89	59	42	30	72	93	63	20	300	7,800
1500	73	89	86	42	30	72	93	90	24	410	10,300
2000	73	72	87	42	30	72	76	91	24	420	11,600
2500	73	72	99	42	30	72	76	103	24	500	14,000
3000	73	84	99	46	37	84	88	103	24	720	18,700
3750	84	85	108	47	38	85	88	112	24	800	20,500
5000	84	96	108	48	48	96	100	112	24	850	25,000
7500	94	102	122	54	48	102	100	126	24	1,620	46,900

[1] Weights, gallons of fluid, and dimensions are for reference only and not for construction. Please contact Eaton's Cooper Power Systems for exact dimensions.

* Add 9" for Bay-O-Net fusing.

Standard features

Connections and neutral configurations

- Delta - Wye: Low voltage neutral shall be a fully insulated X0 bushing with removable ground strap.
- Grounded Wye-Wye: High voltage neutral shall be internally tied to the low voltage neutral and brought out as the H0X0 bushing in the secondary compartment with a removable ground strap.
- Delta-Delta: Transformer shall be provided without a neutral bushing.
- Wye-Wye: High voltage neutral shall be brought out as the H0 bushing in the primary compartment and the low voltage neutral shall be brought as the X0- bushing in the secondary compartment.
- Wye-Delta: High voltage neutral shall be brought out as the H0 bushing in the primary compartment. No ground strap shall be provided (line to line rated fusing is required).

High and low voltage bushings

- 200 A bushing wells (15, 25, and 35 kV)
- 200 A, 35 kV Large Interface
- 600 A (15, 25, and 35 kV) Integral bushings (dead-front)
- Electrical-grade wet-process porcelain bushings (live-front)

Tank/cabinet features

- Bolted cover for tank access (45-1750 kVA)
- Welded cover with hand hole (2000-12,000 kVA)
- Three-point latching door for security
- Removable sill for easy installation
- Lifting lugs (4)
- Stainless steel cabinet hinges and mounting studs
- Steel divider between HV and LV compartment
- 20" Deep cabinet (45-1000 kVA)
- 24" Deep cabinet (1500-7500 kVA)
- 30" Deep cabinet (34.5/19.92 kV)
- Pentahead captive bolt
- Stainless steel 1-hole ground pads (45-500 kVA)
- Stainless steel 2-hole ground pads (750-10,000 kVA)
- Parking Stands

Valves/plugs

- One-inch upper filling plug
- One-inch drain plug (45-500 kVA)
- One-inch combination drain valve with sampling device in low voltage compartment (750-12,000 kVA)
- Automatic pressure relief valve

Nameplate

- Laser-scribed anodized aluminum nameplate



Figure 3. Drain valve with sampler.



Figure 4. Automatic Pressure relief valve.



Figure 5. Liquid level gauge.



Figure 6. External Gauges.



Figure 7. External visible break with gauges.

Optional features

High and low voltage bushings

- 200 A (15, 25 kV) bushing inserts
- 200 A (15, 25 kV) feed thru inserts
- 200 A (15, 25 kV) (HTN) bushing wells with removable studs
- High-voltage 600 A (15, 25, 35 kV) deadbreak one-piece bushings
- Low voltage 6-, 8-holes spade
- Low voltage 12-, 16-, 20-holes spade (750-2500 kVA)
- Low voltage bushing supports

Tank/cabinet features

- Stainless steel tank base and cabinet
- Stainless steel tank base, cabinet sides and sill
- 100% stainless steel unit
- Service entrance (2 inch) in sill or cabinet side
- Touch-up paint (domestic)
- Copper ground bus bar
- Kirk-Key provisions
- Nitrogen blanket
- Bus duct cutout

Special designs

- Factory Mutual (FM)
- UL® Classified
- Triplex
- High altitude
- K-Factors
- Step-up
- Critical application
- Modulation transformers
- Seismic applications (including OSHPD)

Switches

- One, two, or three On/Off loadbreak switches
- 4-position loadbreak V-blade switch or T-blade switch
- Delta-wye switch
- 3-position V-Blade selector switch
- 100 A, 150 A, 300 A tap changers
- Dual voltage switch
- Visible break with VFI interrupter interlock
- External visible break (15, 25, and 35 kV, up to 3 MVA)
- External visible break with gauges (15, 25, and 35 kV, up to 3 MVA)

Gauges and devices

- Liquid level gauge (optional contacts)
- Pressure vacuum gauge (optional contacts and bleeder)
- Dial-type thermometer (optional alarm contacts)
- Cover mounted pressure relief device
- Ground connectors
- Hexhead captive bolt
- Breaker mounting provisions
- External gauges in padlockable box

Overcurrent protection

- Bay-O-Net fusing (Current sensing, dual sensing, dual element, high amperage overload)
- Bay-O-Net expulsion fuse in series with a partial range under-oil ELSP current limiting fuse (below 23 kV)
- Cartridge fusing in series with a partial range under-oil ELSP current limiting fuse (above 23 kV)
- MagneX™ interrupter with ELSP current-limiting fuse
- Vacuum Fault Interrupter (VFI)
- Visible break window
- Fuse/switch interlock

Valves/plugs

- Drain/sampling valve in high-voltage compartment
- Globe type upper fill valve

Overvoltage protection

- Distribution-, intermediate-, or station-class surge arresters
- Elbow arresters (for dead-front connections)

Metering/fan/control

- Full metering package
- Current Transformers (CTs)
- Metering Socket
- NEMA® 4 control box (optional stainless steel)
- NEMA® 7 control box (explosion proof)
- Fan Packages

Testing

- Customer test witness
- Customer final inspection
- Zero Sequence Impedance Test
- Heat Run Test
- ANSI® Impulse Test
- Audible Sound Level Test
- RIV (Corona) Test
- Dissolved Gas Analysis (DGA) Test
- 8- or 24-Hour Leak Test

Coatings (paint)

- ANSI® Bell Green
- ANSI® #61 Light Gray
- ANSI® #70 Sky Gray
- Special paint available per request

Nameplate

- Stainless steel nameplate

Decals and labels

- High voltage warning signs
- Mr. Ouch
- Bi-lingual warning
- DOE compliant
- Customer stock code
- Customer stenciling
- Shock and arc flash warning decal
- Non-PCB decal

Construction

Core

The three-legged, step-lap mitered core construction is manufactured using a high-quality cutting machine. For maximum efficiency, cores are precisely stacked, virtually eliminating gaps in the corner joints.

Five-legged wound core or shell-type triplex designs are used for wye-wye connected transformers, and other special transformer designs.

Cores are manufactured with precision cut, burr-free, grain-oriented silicon steel. Many grades of core steel are available for optimizing core loss efficiency.

Coils

Pad-mounted transformers feature a rectangular coil configuration with wire-wound, high-voltage primaries and sheet-wound secondaries. The design minimizes axial stress developed by short circuits and provides for magnetic balancing of tap connections.

Coils are wound using the highest quality winding machines providing exacting tension control and conductor placement for superior short-circuit strength and maximum efficiency.

Extra mechanical strength is provided by diamond pattern, epoxy-coated paper insulation, used throughout the coil, with additional epoxy at heavy stress points. The diamond pattern distribution of the epoxy and carefully arranged ducts, provide a network of passages through which cooling fluid can freely circulate.

Coil assemblies are heat-cured under calculated hydraulic pressure to ensure performance against short-circuit forces.

Core and coil assemblies

Pad-mounted transformer core and coil assemblies are braced with heavy steel ends to prevent the rectangular coil from distorting under short-circuit conditions. Plates are clamped in place using presses, and welded or bolted to form a solid core and coil assembly. Core and coil assemblies exceed ANSI® and IEEE® requirements for short-circuit performance. Due to the rigidity of the design, impedance shift after short-circuit is comparable to that of circular wound assemblies.

Tanks

Transformer tanks are designed for high strength and ease of handling, installation, and maintenance. Tanks are welded using precision-cut, hot rolled, pickled and oiled steel. They are sealed to protect the insulating fluid and other internal components.

Transformer tanks are pressure-tested to withstand 7 psig without permanent distortion and 15 psig without rupture.

Tank finish

An advanced multi-stage finishing process exceeds IEEE Std C57.12.28™-2005 standards. The eight-stage pre-treatment process assures coating adhesion and retards corrosion. It converts tank surfaces to a nonmetallic, water insoluble iron phosphate coating.

The paint method consists of two distinct layers of paint. The first is an epoxy primer (E-coat) layer which provides a barrier against moisture, salt and corrosives. The two-component urethane final coat seals and adds ultraviolet protection.

Vacuum processing

Transformers are dried and filled with filtered insulating fluid under vacuum, while secondary windings are energized. Coils are heated to drive out moisture, ensuring maximum penetration of fluid into the coil insulation system.

Insulating fluid

Transformers from Eaton's Cooper Power Systems are available with electrical-grade mineral insulating oil or Envirotemp™ FR3™ fluid. The highly refined fluids are tested and degassed to assure a chemically inert product with minimal acid ions. Special additives minimize oxygen absorption and inhibit oxidation. To ensure high dielectric strength, the fluid is re-tested for dryness and dielectric strength, refiltered, heated, dried, and stored under vacuum before being added to the completed transformer.

Eaton's Cooper Power Systems transformers filled with Envirotemp™ FR3™ fluid enjoy unique fire safety, environmental, electrical, and chemical advantages, including insulation life extending properties.

A bio-based, sustainable, natural ester dielectric coolant, Envirotemp™ FR3™ fluid quickly and thoroughly biodegrades in the environment and is non-toxic per acute aquatic and oral toxicity tests.

Building for Environmental and Economic Sustainability (BEES) total life cycle assessment software, utilized by the US Dept. of Commerce, reports its overall environmental performance impact score at 1/4th that reported for mineral oil. Envirotemp™ FR3™ fluid has also earned the EPA Environmental Technology Verification of transformer materials.

With a fire point of 360 °C, Envirotemp™ FR3™ fluid is FM Approved® and Underwriters Laboratories (UL®) Classified "Less-Flammable" per NEC® Article 450-23, fitting the definition of a Listed Product per NEC®.



Figure 8. VFI transformer with visible break.

Pad-mounted VFI transformer

The VFI transformer combines a conventional distribution transformer from Eaton's Cooper Power Systems with the proven Vacuum Fault Interrupter (VFI). This combination provides both voltage transformation and transformer over current protection in one space saving and money saving package. The pad-mounted VFI transformer protects the transformer and provides proper coordination with upstream protective devices. When a transformer fault or overload condition occurs, the VFI breaker trips and isolates the transformer.

The three-phase VFI breaker has independent single-phase initiation, but is three-phase mechanically gang-tripped. A trip signal on any phase will open all three phases. This feature eliminates single-phasing of three phase loads. It also enables the VFI breaker to be used as a three-phase load break switch.

Due to the resettable characteristics of the VFI breaker, restoring three-phase service is faster and easier.

The sealed visible break window and switch is an option that can be installed to provide visible break contact. This feature provides enhanced safety and allows an operator to see if the loadbreak switch contacts are in an open or closed position before performing maintenance.

Envirotran™ FM Approved special protection transformer

The Envirotran™ transformer from Eaton's Cooper Power Systems is FM Approved and suitable for indoor locations. Factory Mutual Research Corporation's (FMRC) approval of the Envirotran transformer line makes it easy to comply with and verify compliance with Section 450.23, 2008 NEC, Less-Flammable Liquid-Filled Transformer Requirements for both indoor and outdoor locations.

Envirotran FM Approved transformers offer the user the benefit of a transformer that can be easily specified to comply with NEC, and makes FM Safety Data Sheet compliance simpler, while also providing maximum safety and flexibility for both indoor and outdoor installations.

Because the "FM Approved" logo is readily visible on the transformer and its nameplate, NEC compliance is now easily verifiable by the inspector.

Envirotran FM Approved transformers are manufactured under strict compliance with FMRC Standard 3990 and are filled with FM Approved Envirotemp™ FR3™ fluid, a fire-resistant dielectric coolant.

FM APPROVED

Special application transformers

Data Center transformer

With focus rapidly shifting from simply maximizing uptime and supporting demand to improving energy utilization, the data center industry is continually looking for methods to increase its energy efficiency and reliability. Utilizing cutting edge technology, Eaton's Cooper Power Systems Hardened Data Center (HDC) transformers are the solution. Designed with special attention given to surge protection, HDC liquid-filled transformers provide superior performance under the harshest electrical environments. Contrary to traditional dry-type units, HDC transformers provide unsurpassed reliability, overloadability, operational life, efficiency, thermal loading and installed footprint. These Eaton's Cooper Power Systems units have reliably served more than 100 MW of critical data center capacity for a total of more than 6,000,000 hours without any reported downtime caused by a thermal or short-circuit coil failure.

The top priority in data center operations is uninterrupted service. Envirotran HDC transformers from Eaton's Cooper Power Systems, having substantially higher levels of insulation, are less susceptible to voltage surges. Eaton's Cooper Power Systems has experienced zero failures due to switching transients. The ANSI® and IEEE® standard impulse withstand ratings are higher for liquid-filled transformers, making them less susceptible to insulation failure. The Envirotran HDC transformer provides ultimate protection by increasing the BIL rating one level higher than standard liquid-filled transformer ratings. The cooling system of liquid-filled transformers provides better protection from severe overloads—overloads that can lead to significant loss of life or failure.

Data center design typically includes multiple layers of redundancy, ensuring maximum uptime for the critical IT load. When best in class transformer manufacturing lead times are typically weeks, not days, an unexpected transformer failure will adversely affect the facility's reliability and profitability. Therefore, the ability to determine the electrical and mechanical health of a transformer can reduce the probability of costly, unplanned downtime. Routine diagnostic tests, including key fluid properties and dissolved gas analysis (DGA), can help determine the health of a liquid-filled transformer. Although sampling is not required for safe operation, it will provide the user with valuable information, leading to scheduled repair or replacement, and minimizing the duration and expense of an outage. With a dry-type transformer, there is no reliable way to measure the health or likelihood of an impending failure.

Solar transformer

As a result of the increasing number of states that are adopting aggressive Renewable & Alternative Energy Portfolio Standards, the solar energy market is growing—nearly doubling year over year. Eaton's Cooper Power Systems, a key innovator and supplier in this expanding market, is proud to offer Envirotran transformers specifically designed for Solar Photovoltaic medium-voltage applications. Eaton's Cooper Power Systems is working with top solar photovoltaic developers, integrators and inverter manufacturers to evolve the industry and change the way we distribute power.

In accordance with this progressive stance, every Eaton's Cooper Power Systems Envirotran Solar transformer is filled with non-toxic, biodegradable Envirotemp™ FR3™ dielectric fluid, made from renewable seed oils. On top of its biodegradability, Envirotemp™ FR3™ fluid substantially extends the life of the transformer insulation, saving valuable resources. What better way to distribute green power than to use a green transformer. In fact, delaying conversion to Envirotran transformers places the burden of today's environmental issues onto tomorrow's generations. Eaton's Cooper Power Systems can help you create a customized transformer, based on site specific characteristics including: temperature profile, site altitude, solar profile and required system life. Some of the benefits gained from this custom rating include:

- Reduction in core losses
- Improved payback on investment
- Reduction in footprint
- Improved fire safety
- Reduced environmental impact

For the solar photovoltaic industry, Eaton's Cooper Power Systems is offering standard step up transformers and dual secondary designs, including 4-winding, 3-winding (Low-High-Low) and 3-winding (Low-Low-High) designs.

Wind transformer

Eaton's Cooper Power Systems is offering custom designs for renewable energy power generation. Eaton's Cooper Power Systems manufactures Generator Step-Up (GSU) transformers for installation at the base of every wind turbine. Additionally, grounding transformers are available for wind power generation.

DOE efficiency

The United States Department of Energy (DOE) has mandated efficiency values for most liquid type, medium voltage transformers. As a result, all applicable Eaton's Cooper Power Systems transformers are designed to meet or exceed the standard efficiency values per DOE 2010; Final Ruling, 10 CFR Part 431.

Underwriters Laboratories® (UL®) Listed and Labeled/ Classified

The Envirotran transformer from Eaton's Cooper Power Systems can be specified as UL® Listed & Labeled, and/or UL® Classified. Underwriters Laboratories (UL®) listing is a verification of the design and construction of the transformer to the ANSI® and IEEE® standards. UL® listing generally is the most efficient, cost-effective solution for complying with relevant state and local electrical codes. UL® Combination Classification/Listing is another way in which to comply with Section 450.23, 2008 NEC® requirements. This combines the UL® listed transformer with a UL® Classified Less-Flammable Liquid and complies with the use restrictions found within the liquid Classification.

c UL US LISTED

K-Factor transformer

With a drastic increase in the use of ferromagnetic devices, arcing devices, and electric power converters, higher frequency loads have increased significantly. This harmonic loading has the potential to generate higher heat levels within a transformer's windings and leads by as much as 300%. Harmonic loading has the potential to induce premature failure in standard-design distribution transformers.

In addition to standard UL® "K-Factor" ratings, transformers can be designed to customer-provided specifications detailing precise loading scenarios. Onsite measurements of magnitude and frequency, alongside harmonic analysis of the connected load can be performed by Eaton's Cooper Power Systems engineers or a third party consultant. These field measurements are used to determine exact customer needs and outline the transformer specifications.

Eaton's Cooper Power Systems will design harmonic-resistant transformers that will be subjected to the unique harmonic loads. These units are designed to maintain normal temperature rise under harmonic, full-load conditions. Standard UL® "K-Factor" designs can result in unnecessary costs when the "next-highest" K-Factor must be selected for a calculated design factor. To save the customer these unnecessary costs, Eaton's Cooper Power Systems can design the transformer to the specific harmonic spectrum used in the application. K-factor transformers from Eaton's Cooper Power Systems are filled with mineral oil or Envirotemp™ FR3™ fluid and enjoy the added benefits of dielectric cooling such as higher efficiencies than dry-type transformers.

Modulation transformer

Bundled with an Outboard Modulation Unit (OMU) and a Control and Receiving Unit (CRU), a Modulation Transformer Unit (MTU) is designed to remotely achieve two way communication.

The use of an MTU reduces travel time and expense versus traditional meter reading performed by high voltage electricians. Additionally, with MTU it is possible to manage and evaluate energy consumption data, providing reduced metering costs and fewer tenant complaints.

An MTU utilizes existing utility infrastructure, therefore eliminating the need to engineer and construct a dedicated communication network.



Figure 9. Modular transformer.

Inverter/rectifier bridge

Eaton's Cooper Power Systems complements its range of applications for transformers by offering dual winding designs. These designs are intended for connection to 12-pulse rectifier bridges.

Product attributes

To set us apart from other transformer manufactures, Eaton's Cooper Power Systems includes the following guarantees with every three-phase pad-mounted transformer.

Engineered to order (ETO)

Providing the customer with a well developed, cost-effective solution is the number one priority at Eaton's Cooper Power Systems. Using customer specifications, Eaton's Cooper Power Systems will work with the customer from the beginning to the end to develop a solution to fit their needs. Whether it is application specific, site specific, or a uniquely specified unit, Eaton's Cooper Power Systems will provide transformers with the best in class value and performance, saving the customer time and money.

Made in the U.S.A.

Eaton's Cooper Power Systems three-phase pad-mounted transformers are produced right here in the United States of America. Our manufacturing facilities are positioned strategically for rapid shipment of products. Furthermore, should the need arise, Eaton's Cooper Power Systems has a broad network of authorized service repair shops throughout the United States.

Superior paint performance

Protecting transformers from nature's elements worldwide, Eaton's Cooper Power Systems E-coat system provides unrivaled transformer paint life, and exceeds IEEE Std C57.12.28™-2005 and IEEE Std C57.12.29™-2005 standards. In addition to the outside of the unit, each transformer receives a gray E-coat covering in the interior of the tank and cabinet, providing superior rust resistance and greater visibility during service.

If the wide range of standard paint selections does not suit the customer's needs, Eaton's Cooper Power Systems will customize the paint color to meet their requirements.

Rectangular coil design

Eaton's Cooper Power Systems utilizes a rectangular coil design. This winding technique results in a smaller overall unit footprint as well as reducing the transformer weight. The smaller unit size does not hinder the transformer performance in the least. Units have proven short circuit withstand capabilities up to 12 MVA.

Testing

Eaton's Cooper Power Systems performs routing testing on each transformer manufactured including the following tests:

- Insulation Power Factor: This test verifies that vacuum processing has thoroughly dried the insulation system to required limits.
- Ratio, Polarity, and Phase Relation: Assures correct winding ratios and tap voltages; checks insulation of HV and LV circuits. Checks entire insulation system to verify all live-to-ground clearances.
- Resistance: This test verifies the integrity of internal high-voltage and low-voltage connections; provides data for loss upgrade calculations.
- Applied Potential: Applied to both high-voltage and low-voltage windings, this test stresses the entire insulation system to verify all live-to-ground clearances.
- Induced Potential: 3.46 times normal plus 1000 volts for reduced neutral designs.
- Loss Test: These design verification tests are conducted to assure that guaranteed loss values are met and that test values are within design tolerances. Tests include no-load loss and excitation

current along with impedance voltage and load loss.

- Leak Test: Pressurizing the tank to 7 psig assures a complete seal, with no weld or gasket leaks, to eliminate the possibility of moisture infiltration or fluid oxidation.

Design performance tests

The design performance tests include the following:

- Temperature Rise: Our automated heat run facility ensures that any design changes meet ANSI® and IEEE® temperature rise criteria.
- Audible Sound Level: Ensures compliance with NEMA® requirements.
- Lightning Impulse: To assure superior dielectric performance, this test consists of one reduced wave, two chopped waves and one full wave in sequence, precisely simulating the harshest conditions.

Thomas A Edison Research and Test Facility

We are constantly striving to introduce new innovations to the transformer industry, bringing you the highest quality transformer for the lowest cost. Eaton's Cooper Power Systems Transformer Products are ISO 9001 compliant, emphasizing process improvement in all phases of design, manufacture, and testing. We have invested millions of dollars in the Thomas A. Edison Technical Center, our premier research facility in Franksville, Wisconsin affirming our dedication to introducing new innovations and technologies to the transformer industry. Headquarters for the Systems Engineering group of Eaton's Cooper Power Systems, this research facility is fully available for use by our customers to utilize our advanced electrical and chemical testing labs.

Eaton
1000 Eaton Boulevard
Cleveland, OH 44122
United States
Eaton.com

Eaton's Cooper Power Systems Business
2300 Badger Drive
Waukesha, WI 53188
United States
Cooperpower.com

© 2013 Eaton
All Rights Reserved
Printed in USA
Publication No. 210-12
August 2013

Eaton, Cooper Power Systems, MagneX, UltraSIL, Evolution, and Envirotran are valuable trademarks of Eaton in the U.S. and other countries. You are not permitted to use the these trademarks without the prior written consent of Eaton.
IEEE Std C57.12.28™-2005 and Std C57.12.29™-2005 standards are trademarks of the Institute of Electrical and Electronics Engineers, Inc., (IEEE). This publication is not endorsed or approved by the IEEE.
IEEE® is a registered trademark of the Institute of Electrical and Electronics Engineers, Inc.
ANSI® is a registered trademark of American National Standards Institute.
National Electrical Code® and NEC® are registered trademarks of the National Fire Protection Association, Inc., Quincy, MA.
Underwriters Laboratories® and UL® are registered trademarks of UL LLC.
FM Approved®, FMRC, and Factory Mutual Research Corporation are trademarks of FM Global.
Envirotemp™ and FR3™ are licensed trademarks of Cargill, Incorporated.

Powering Business Worldwide

Capstone MicroTurbine
Model C30 User's Manual



Software Versions: 5.30 and higher (gaseous fuel)
5.16 and higher (liquid fuel)

Capstone reserves the right to change or modify, without notice, the design, specifications, and/or contents of this document without incurring any obligation either with respect to equipment previously sold or in the process of construction.

Capstone Turbine Corporation
21211 Nordhoff Street • Chatsworth • CA 91311 • USA
Telephone: (818) 407-3600
Facsimile: (818) 734-5382
Website: www.capstoneturbine.com

Capstone Technical Support
Telephone: (866) 4-CAPSTONE or (866) 422-7786
E-mail: service@capstoneturbine.com

Copyright © 2013 Capstone Turbine Corporation. All Rights Reserved.

Capstone reserves the right to change or modify, without notice, the design, specifications, and/or contents of this document without incurring any obligation either with respect to equipment previously sold or in the process of construction.

Table of Contents

1. Introduction 7
1.1. Safety Information 7
1.1.1. Symbols 7
1.1.2. General Precautions 8
1.1.3. Electrical Precautions 9
1.1.4. Fuel Precautions 9
1.1.5. Exhaust Precautions 10
1.1.6. Acoustic Emissions Precautions 10
1.2. Certifications, Permits, and Codes 11
1.3. Output Measurements 11
1.3.1. ISO Conditions 11
1.3.2. Pressure 11
1.3.3. Volume 11
1.3.4. Heating Values 11
1.3.5. Microturbine Performance 11
1.3.6. Grid Connect Output 12
1.3.7. Stand Alone Output 12
1.3.8. Power Quality 12
1.3.9. Heat Output 12
1.4. Referenced Documents 12
2. Microturbine Description 13
2.1. User Interface 15
2.2. Microturbine Features 16
2.2.1. Microturbine Engine 16
2.2.2. Air Bearings 17
2.2.3. Digital Power Electronics 17
2.2.4. Fuel System 18
2.2.5. Emissions 18
2.2.6. Enclosure 18
2.2.7. Combined Heating and Power (CHP) 19
2.2.8. Hazardous Location Option 19
2.2.9. Offshore Option 19
2.2.10. Capstone Remote Monitoring Software 19
2.2.11. Grid Connect Mode 20
2.2.12. Dual Mode 20
2.2.13. MultiPac Power 20
3. Microturbine Operation 21
3.1. Basic Microturbine Operation 21
3.1.1. Communications 21
3.1.2. Operational Data 22
3.1.3. Control Device Authority and Priority 22

Capstone reserves the right to change or modify, without notice, the design, specifications, and/or contents of this document without incurring any obligation either with respect to equipment previously sold or in the process of construction.

3.1.4. Startup 22
3.1.5. Shutdown 22
3.1.6. Emergency Stop (E-Stop) 23
3.1.7. Restart 23
3.2. Grid Connect Operation 23
3.2.1. Grid Connect Dispatch 23
3.2.2. Configuring Grid Connect 24
3.2.3. Grid Connect Interlock 24
3.2.4. Grid Connect Mode Enable 24
3.2.5. Starting a Grid Connect System 24
3.2.6. Stopping a Grid Connect System 24
3.2.7. Grid Connect Power Demand 25
3.3. Stand Alone Operation 25
3.3.1. Configuring Stand Alone 25
3.3.2. Stand Alone Interlock 25
3.3.3. Stand Alone Mode Enable 25
3.3.4. Stand Alone Battery 26
3.3.5. Stand Alone Battery Isolation Switch 26
3.3.6. System Sleep in Stand Alone Mode 26
3.3.7. Waking a Stand Alone Microturbine 27
3.3.8. Starting a Stand Alone System 27
3.3.9. Enabling Stand Alone Power Output 27
3.3.10. Stand Alone System Power Level 27
3.3.11. Disabling Stand Alone Power Output 27
3.3.12. Stopping a Stand Alone System 28
3.4. Dual Mode Operation 28
3.4.1. Capstone DMSC 28
3.4.2. Configuring Dual Mode 29
3.4.3. Setting the System for Dual Mode Operation 29
3.4.4. Switching Times for Dual Mode 29
3.5. MultiPac Operation 29
3.5.1. MultiPac Grid Connect Operation 29
3.5.2. MultiPac Stand Alone Operation 30
3.5.3. MultiPac Redundancy 30
3.5.4. MultiPac Enable/Disable 30
3.5.5. Changing the Master Unit in a MultiPac using the Display Panel 30
3.6. Hazardous Location Operation 32
4. Using the Display Panel 32
4.1. Display Panel Areas 33
4.2. Menu Navigation 34
4.3. Display Panel Data Entry 34
4.3.1. Logging On with a Password 35
4.3.2. Changing the Password 35

Capstone reserves the right to change or modify, without notice, the design, specifications, and/or contents of this document without incurring any obligation either with respect to equipment previously sold or in the process of construction.

4.4. Display Panel Menus – Overview 35
4.5. System Data Menu 37
4.5.1. Turbine Number 37
4.5.2. System Output 37
4.5.3. Clear Incident 38
4.5.4. System Configuration 38
4.5.5. System Demand 40
4.5.6. System Power Factor 40
4.5.7. Control Access 41
4.5.8. Enter Password Submenu 41
4.5.9. Logoff 42
4.5.10. Reboot Submenu 42
4.6. Grid Connect Menu 42
4.6.1. Stored Demand 43
4.6.2. Under Voltage Submenu 44
4.6.3. Over Voltage Submenu 44
4.6.4. Fast Under Voltage Submenu 45
4.6.5. Fast Over Voltage Submenu 45
4.6.6. Under Frequency Submenu 46
4.6.7. Over Frequency Submenu 46
4.6.8. Reconnect Delay Submenu 47
4.6.9. Active Power Foldback on Over Frequency 47
4.7. Stand Alone Menu 48
4.7.1. Voltage Submenu 48
4.7.2. Under Voltage Submenu 49
4.7.3. Over Voltage Submenu 49
4.7.4. Frequency Submenu 50
4.7.5. Under Frequency Submenu 50
4.7.6. Over Frequency Submenu 50
4.7.7. MultiPac Minimum Power Submenu 51
4.7.8. Local Battery Charge Submenu 51
4.8. Unit Data Menu 52
5. Microturbine Preventive Maintenance 54
5.1. Scheduled Maintenance 54
5.2. Preventive Maintenance 54
5.2.1. Microturbine Inlet Air Filter 54
5.2.2. External Fuel Filter 55
5.2.3. Battery Maintenance During Storage 55
5.2.4. Battery Charge Management 56
5.2.5. Warranty 57
6. Troubleshooting 57
6.1. Incidents 57
6.2. Incident System Severity Levels 58

Capstone reserves the right to change or modify, without notice, the design, specifications, and/or contents of this document without incurring any obligation either with respect to equipment previously sold or in the process of construction.

6.3. Incident Display Format 58
6.4. Incident Records 58
6.5. Isolation Messages 59
6.5.1. Internal 59
6.5.2. Fuel 59
6.5.3. Grid 59
6.5.4. Lo-Temp/Hi-Temp/Hi-Alt 59
6.5.5. E-Stop 60
6.5.6. User Conn (User Connection) 60
6.6. Basic Troubleshooting Procedures 60
6.6.1. Troubleshooting Procedures for Standard C30 Model 60
6.6.2. Troubleshooting Procedures for C30 Hazardous Location Model 61
7. Product Support 63

List of Figures

Figure 1. C30 Microturbine 14
Figure 2. User Port Location (Microturbine Rear View) 15
Figure 3. Typical Capstone Model C30 Microturbine Engine (Cutaway View) 17
Figure 4. Battery Isolation Switch Access 26
Figure 5. Pushbutton Display Panel 32
Figure 6. Touch Key Display Panel 33
Figure 7. Display Panel Menu Function Hierarchy 36

List of Tables

Table 1. Unit Data Submenus 52
Table 2. Maximum Recharge Intervals 55
Table 3. Maximum Recharge Intervals in Sleep Mode 56

Capstone reserves the right to change or modify, without notice, the design, specifications, and/or contents of this document without incurring any obligation either with respect to equipment previously sold or in the process of construction.

1. Introduction

This document provides user instructions to operate and maintain the Capstone Turbine Corporation Model C30 Microturbine. This document is intended for user personnel who may not have specific training on the Microturbine. Capstone Authorized Service Providers (ASPs) have received rigorous training and have been certified to perform commissioning, troubleshooting, and repair of the microturbine. This document reflects C30 microturbine software version 5.30 and higher for gaseous fuel, and version 5.16 and higher for liquid fuel. This software version adds power factor adjustment capability and VDE compliance for grid connect operation.

Basic troubleshooting is included in this manual, but only Capstone Authorized Service Providers are permitted to perform detailed troubleshooting and repair of the equipment. For detailed technical data, or for service to the microturbine, contact your Capstone Authorized Service Provider.

User personnel who have not received certification of satisfactory completion of the Authorized Service Provider training should not attempt any procedures other than those specifically described in this document.

1.1. Safety Information

This section presents safety information for the user of Capstone Turbine Corporation microturbines. The user must read and understand this manual before operation of the equipment. Failure to obey all safety precautions and general instructions may cause personal injury and/or damage to the equipment.

The Capstone microturbine is an advanced power generation system with user and material safety foremost in mind. Fail-safe operation includes mechanical systems, electrical systems, and engine control software.

It is the user's responsibility to read and obey all safety procedures and to become familiar with these procedures and how to safely operate this equipment.

1.1.1. Symbols

There are three very important symbols used in this document: Warnings, Cautions, and Notes. WARNINGs and CAUTIONs alert you to situations and procedures that can be dangerous to people and/or cause equipment damage. NOTEs provide additional information relating to a specific operation or task.

	ELECTRICAL WARNING: Identifies an electrical hazard that can result in personal injury or death.
	WARNING: Identifies a hazard that can result in personal injury or death.
	CAUTION: Alerts you to a hazard that can result in equipment damage.
	NOTE: Clarifies instructions or highlights important information.

Capstone reserves the right to change or modify, without notice, the design, specifications, and/or contents of this document without incurring any obligation either with respect to equipment previously sold or in the process of construction.

1.1.2. General Precautions

The following general precautions must be observed and followed at all times. Failure to do so may result in personal injury and/or equipment damage.

	NOTE: Some of the following precautions do not directly apply to users, but it is important for users to be aware of them.

- Only Capstone Authorized Service Providers are permitted access to the inside of the enclosure.
- Read and understand the User's Manual before operating the equipment.
- Read and obey all warnings and cautions.
- Make sure all fuel connections are tight, free from leaks, and protected from damage.
- Make sure all electrical connections are tight, clean, dry, and protected from weather and damage.
- The microturbine may be equipped with a heat recovery system. Use caution around relief valves where hot water and steam may be present.
- A pressurized enclosure (e.g., hazardous location package) should not be opened: 1) Unless the area is known to be free of flammable materials; 2) All devices have been de-energized from the utility. Power should not be restored until the enclosure has been purged for three minutes.
- Use hearing protection when you work on or near an operating microturbine for extended time periods.
- The microturbine is heavy. Be careful when you move or lift the microturbine.
- Keep the equipment clean.
- Keep all flammable materials away from the microturbine and its components.
- Do not operate or work on the equipment if mentally or physically impaired, or after consumption of alcohol or drugs.
- Make sure all fasteners are installed and properly tightened.
- Keep an ABC rated fire extinguisher near the microturbine.
- Obey all applicable local, state, and national codes and regulations.

Capstone reserves the right to change or modify, without notice, the design, specifications, and/or contents of this document without incurring any obligation either with respect to equipment previously sold or in the process of construction.

1.1.3. Electrical Precautions

	ELECTRICAL WARNING: The microturbine system contains and produces high voltage. High voltage can injure or kill. Obey all safety procedures when you work around electrical equipment.

	ELECTRICAL WARNING: Make sure the system is off and the dedicated disconnect switch is in the open position and is locked. This will help prevent injury and damage to the equipment.

	NOTE: Some of the following precautions do not directly apply to users, but it is important for users to be aware of them.

The output voltage and residual capacitor voltage of this equipment is dangerous. Use caution when you work on electrical equipment. The microturbine system can include multiple sources of power. Make sure to turn off the system and lock out all sources of power prior to doing any work on the equipment.

- Command the microturbine system to OFF.
- Open and lock the dedicated disconnect switch to isolate the microturbine from the electric utility grid or loads.
- If the microturbine is equipped with battery packs (i.e., if the microturbine includes the Stand Alone Option), open the battery isolation switches and unplug the battery cables.
- Wait five (5) minutes for any capacitive stored voltage to dissipate.
- Always disconnect all power sources.
- Use a voltmeter to make sure that all circuits are de-energized.
- All output connections must be made in accordance with applicable codes.

1.1.4. Fuel Precautions

	WARNING: Microturbine fuel is flammable and explosive. An explosion can cause death or injury to personnel and/or damage to equipment. No open flame or smoking is allowed near the microturbine.

	WARNING: Gaseous fuels can be corrosive. Concentrations of Hydrogen Sulfide (H_2S) can be found in Sour Natural Gas and Sour High Btu Gas. Injury to personnel and/or damage to equipment can occur. Minimize exposure to gaseous fuels and provide satisfactory fresh airflow when you are around equipment.

The Capstone microturbine operates on approved gaseous fuels. Keep flames, sparks, pilot lights, equipment that produces electrical arcs, switches or tools, and all other sources of ignition away from areas where fuel and fumes are present. If there is a fire, use a multi-purpose dry chemical or CO_2 fire extinguisher, and contact the appropriate fire officials.

Capstone reserves the right to change or modify, without notice, the design, specifications, and/or contents of this document without incurring any obligation either with respect to equipment previously sold or in the process of construction.

Fuel lines must be secure and free of leaks. Fuel lines must also be separated or shielded from electrical wiring. If you smell fuel fumes, immediately stop operation of the equipment, close the fuel isolation valve, and locate and repair the source of the leak or call a qualified professional.

Make sure to isolate the fuel supply prior to doing any work on the equipment.

- Command the microturbine system to OFF.
- Isolate the fuel supply.

1.1.5. Exhaust Precautions

	WARNING: The microturbine exhaust contains nitrogen dioxide and carbon monoxide, which are poisonous at high concentrations. Make sure there is satisfactory fresh airflow when you work around the equipment.

	WARNING: The exhaust airflow and pipes are hot enough to cause personal injury or fire. The exhaust airflow can reach temperatures as high as 371 °C (700 °F). Keep people, equipment, and other items away from the exhaust airflow and pipes. Always vent exhaust away from personnel.

	WARNING: Hot surfaces and hot exhaust can be dangerous. Personal injury and/or damage to equipment are possible. Be careful when you work on equipment.

The microturbine exhaust is clean and oxygen rich (approximately 18% O_2), with very low levels of air pollutants. Like all fossil fuel combustion technologies, the microturbine produces oxides of nitrogen (NO_X) and carbon monoxide (CO) emissions from the fuel combustion process. Although the microturbine has ultra low NO_X and CO emission levels, make sure precautions are taken to prevent personnel from being exposed to these pollutants while the system is operating.

When installed indoors, the microturbine exhaust must be vented to the outside. Make sure there is a satisfactory fresh air supply. An exhaust system must be added to direct the exhaust away from the system to reduce the risk of exposure to dangerous emissions.

For exhaust connection data, temperatures, pipe requirements, and other related information, contact your Capstone Authorized Service Provider.

When installed outdoors, the microturbine should be located where there is a satisfactory fresh airflow so the exhaust emissions will be dissipated.

1.1.6. Acoustic Emissions Precautions

The Capstone microturbine is designed to produce safe acoustic emissions. However, when working at a radius of 10 meters (or 33 feet) from an enclosed Capstone microturbine, sound level exposure will average approximately 65 dBA.

Capstone recommends that hearing protection be worn when working on or in the immediate vicinity of operating microturbines for extended time periods.

Capstone reserves the right to change or modify, without notice, the design, specifications, and/or contents of this document without incurring any obligation either with respect to equipment previously sold or in the process of construction.

Other acoustic emissions regulations may apply to your specific installation location. Always check to be certain that your installation complies with all codes required by the local jurisdiction.

1.2. Certifications, Permits, and Codes

Your Capstone Microturbine is designed and manufactured in accordance with a variety of national and international standards.

The Capstone Microturbine operates on approved gaseous fuels; thus installation frequently requires one or more permits from local regulatory agencies.

It is not practical to list in the User's Manual the requirements of each authority having jurisdiction and how the Capstone microturbine meets those requirements. For certification data, such as weights, dimensions, required clearances, noise levels, and the Capstone Microturbine Compliance List, please contact your Capstone Authorized Service Provider.

1.3. Output Measurements

The measurements presented in this document are in metric units (with U.S. standard units in parentheses). Refer to the sections below for more data.

1.3.1. ISO Conditions

Combustion turbine powered devices (including the Capstone Microturbine) are typically rated at 15 °C (59 °F) at sea level, or 1 atmosphere (1 atm) which is 760 mm Hg (14.696 psia) and identified as International Organization for Standardization (ISO) conditions. For a complete definition of ISO testing conditions, refer to ISO 3977-2.

1.3.2. Pressure

Pressure figures assume gauge pressure, or 1 standard atmosphere (1 atm) 760 mm Hg (14.696 psia) less than absolute pressure, unless otherwise indicated.

1.3.3. Volume

Fuel gas and exhaust gas volumetric measurements are given in normalized cubic meters (Nm^3) defined at 0 °C (32 °F), and standard cubic feet (SCF) defined at 15.6 °C (60 °F). Both volumes are defined at 1 atm (760 mm Hg, 14.696 psia).

1.3.4. Heating Values

Heat contents and heat rates will be found in either Lower Heating Value (LHV) (dry) or Higher Heating Value (HHV), depending upon the application. Capstone calculates heating values at 1 atmosphere (atm) and 15.6 °C (60 °F), according to ASTM D3588.

1.3.5. Microturbine Performance

The microturbine electrical output capability is reduced when operating in higher ambient temperatures or elevations, and by intake or exhaust restrictions. Contact your Capstone Authorized Service Provider for data on performance specifications.

Capstone reserves the right to change or modify, without notice, the design, specifications, and/or contents of this document without incurring any obligation either with respect to equipment previously sold or in the process of construction.

1.3.6. Grid Connect Output

The microturbine electrical output in Grid Connect mode is 3-phase, 400 to 480 VAC and 45 to 65 Hz (both voltage and frequency are determined by the electric utility grid). The connection type for Grid Connect mode is 4-wire Wye with solidly grounded neutral.

1.3.7. Stand Alone Output

When equipped with the Stand Alone option, the electrical output is user adjustable from 150 to 480 Volts AC and from 10 to 60 Hz. The connection type for Stand Alone mode is 4-wire Wye with solidly grounded neutral.

The output power need not be balanced. Loads can be connected in three phases, or single phase and phase-to-phase, or phase-to-neutral, so long as the current limits are respected. A Ramp Start feature can assist in starting loads with large in-rush currents.

1.3.8. Power Quality

The microturbine output conforms to IEEE 519-1992, IEEE Recommended Practices, and Requirements for Harmonic Control in Electrical Power Systems.

1.3.9. Heat Output

The recuperated microturbine can produce up to 327,000 kJ/hr (310,000 Btu/hr) of clean, usable exhaust heat at 275 °C (530 °F). The microturbine exhaust stack diameter is 127 mm (5 in.) in diameter, flowing 0.31 kg/s (0.68 lbm/s).

Contact your Capstone Authorized Service Provider for data on heat output performance for specific system variations and/or ambient conditions.

1.4. Referenced Documents

The following table contains a list of Capstone documents that are referenced in this User's Manual.

Document Part No	Description
410000	Model C30 Electrical Technical Reference
410028	Stand Alone Operation Technical Reference
410027	Grid Connect Operation Technical Reference
410032	MultiPac Operation Technical Reference
410033	Protective Relay Functions
410065	MicroTurbine Systems Emissions Technical Reference
440000	Standard Maintenance Schedule Work Instructions
480010	C30/C65 Offshore and Hazardous Location Application Guide
518834	C30 Industrial Package Outline and Installation (O&I) Drawing

Capstone reserves the right to change or modify, without notice, the design, specifications, and/or contents of this document without incurring any obligation either with respect to equipment previously sold or in the process of construction.

2. Microturbine Description

The Capstone Microturbine is an adaptable, low-emission, and low maintenance power generation system. A turbine-driven high-speed generator is coupled with digital power electronics to produce high quality electrical power. Capstone's proprietary design allows users to optimize energy costs while operating in parallel with an electric utility grid. The microturbine can provide prime power generation where the electric utility grid is not readily available or where service is unreliable.

The Alternating Current (AC) electrical power output from the microturbine can be paralleled with an electric utility grid or with another generation source. The microturbine can act as a Stand Alone generator for standby, backup, or remote off-grid power. Multiple systems can be combined and controlled as a single larger power source, called a MultiPac.

The microturbine can efficiently use a wide range of approved hydrocarbon-based gaseous fuels. It also produces dry, oxygen-rich exhaust with ultra-low emissions. Utilizing both the generated electric power and the exhaust heat can provide even greater energy cost savings.

Refer to Figure 1 and O&I drawing 518834 for external features and envelope dimensions of the Capstone C30 Microturbine.

Capstone reserves the right to change or modify, without notice, the design, specifications, and/or contents of this document without incurring any obligation either with respect to equipment previously sold or in the process of construction.

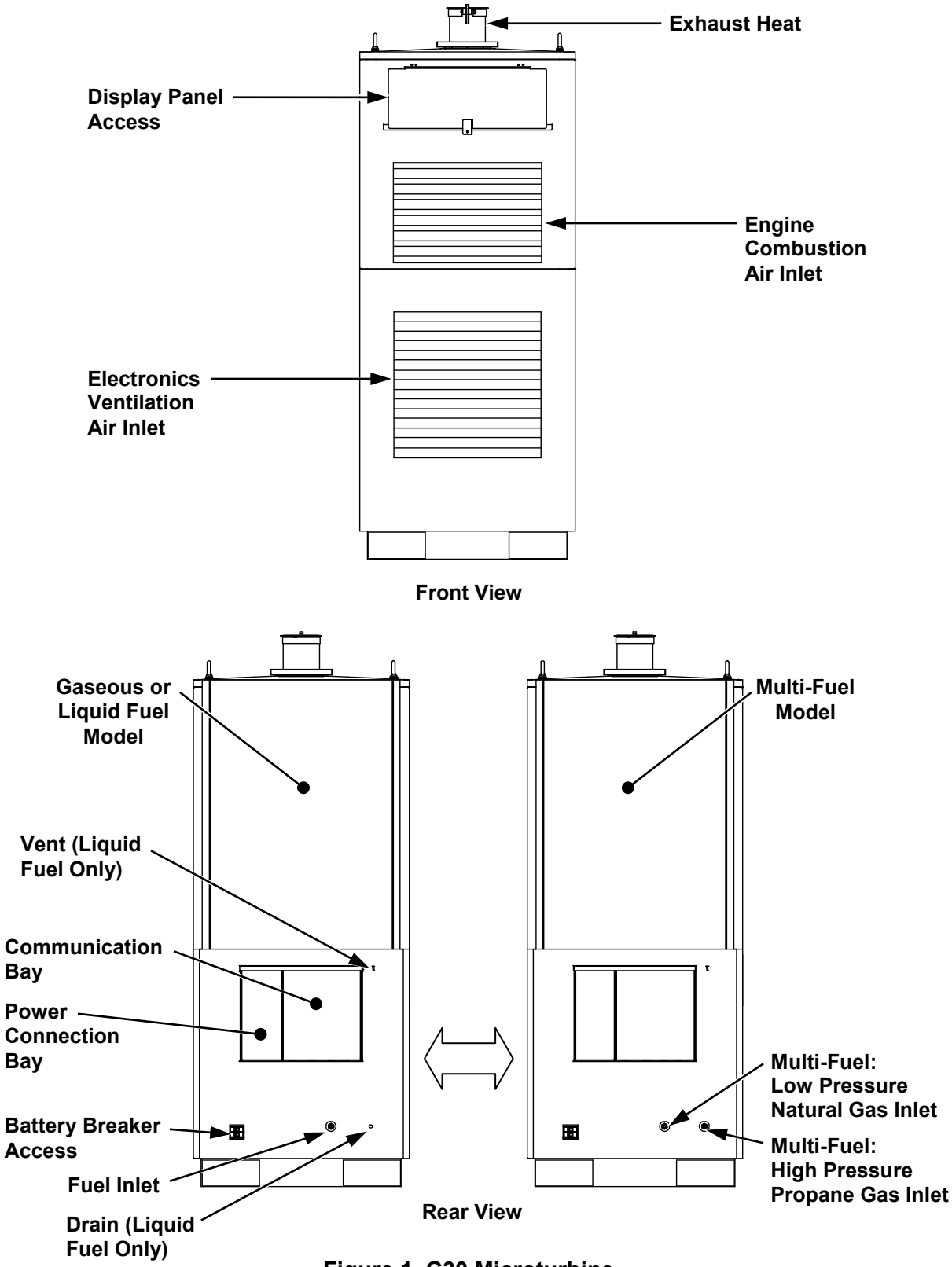

Figure 1. C30 Microturbine

Capstone reserves the right to change or modify, without notice, the design, specifications, and/or contents of this document without incurring any obligation either with respect to equipment previously sold or in the process of construction.

2.1. User Interface

⚠	ELECTRICAL WARNING: The User should NOT open bays other than the Communications Bay. Potentially lethal voltages exist inside the other bays.

The user port is a DB9 RS-232 serial communications connector located on the User Connection Board (UCB) in the Communications Bay on the rear of the microturbine, and is available for remote microturbine operation. Figure 2 shows the location of the user port connector J6.

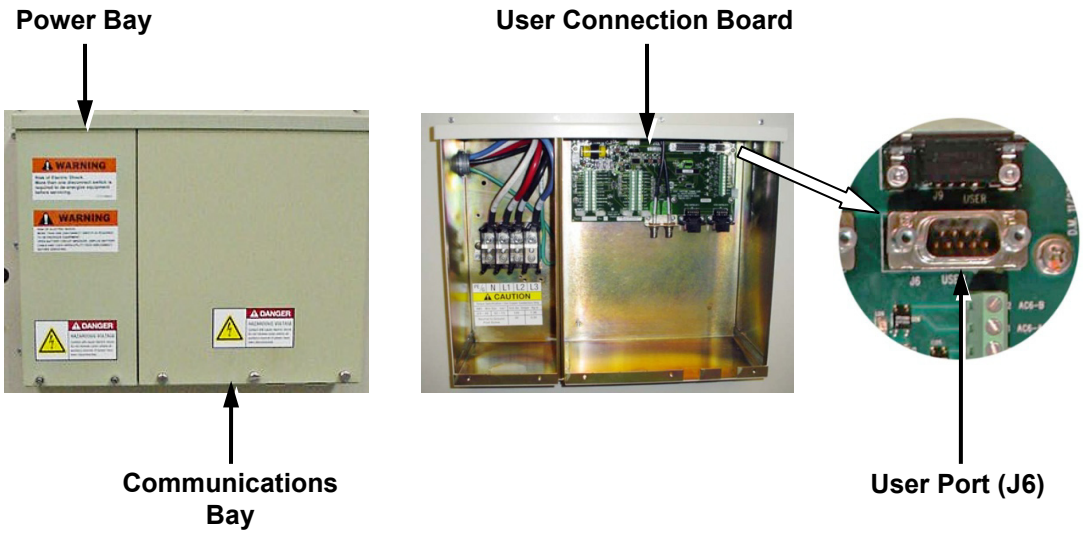

Figure 2. User Port Location (Microturbine Rear View)

You can communicate with the microturbine via the user port by using a Windows 98/2000/NT or later computer with RS-232 null modem cable or Serial to Ethernet Converter and CRMS. Optionally, a modem may be connected to the user port for remote operation via a phone line at a baud rate up to 56k bps.

▷	NOTE: The communication software is not compatible with Windows Vista or Windows 7 as this time.

▷	NOTE: The default user port user password is set to USR123P; the user can change it by using the Capstone Remote Monitoring Software on a computer connected either directly to the user port or remotely via a modem. In the event of a lost user password, your Capstone Authorized Service Provider can reset the user password to this default.

Capstone reserves the right to change or modify, without notice, the design, specifications, and/or contents of this document without incurring any obligation either with respect to equipment previously sold or in the process of construction.

2.2. Microturbine Features

The various features of the Capstone Microturbine are listed below:

- A state-of-the-art digital power controller with built-in protective relay functions provides two output choices:
  - Built-in synchronous AC
  - Stand Alone AC output (optional)
- Patented air bearings eliminate the need for oil or other liquid lubricants.
- Air-cooled design of the entire system (turbine and controller) eliminates the need for liquid coolants.
- The engine has only one moving part. No gears, belts, or turbine-driven accessories.
- Advanced combustion control eliminates the need for ceramics or for other costly materials or for catalytic combustion, and provides ultra-low emissions.
- The integral annular recuperator (heat exchanger) doubles thermal efficiency.
- Digital control technology facilitates advanced control or Ethernet monitoring, and diagnostic capabilities, both on-board and remotely.

2.2.1. Microturbine Engine

The microturbine engine is a combustion turbine that includes a compressor, combustor, turbine, generator, and a recuperator. The rotating components are mounted on a single shaft supported by patented air bearings and spin at up to 96,000 RPM. The permanent magnet generator is cooled by the airflow into the microturbine. The output of the generator is variable voltage, variable frequency AC. The generator is used as a motor during start-up and cooldown cycles.

The key mechanical components that make up the Capstone Microturbine engine are shown in Figure 3.

Capstone reserves the right to change or modify, without notice, the design, specifications, and/or contents of this document without incurring any obligation either with respect to equipment previously sold or in the process of construction.

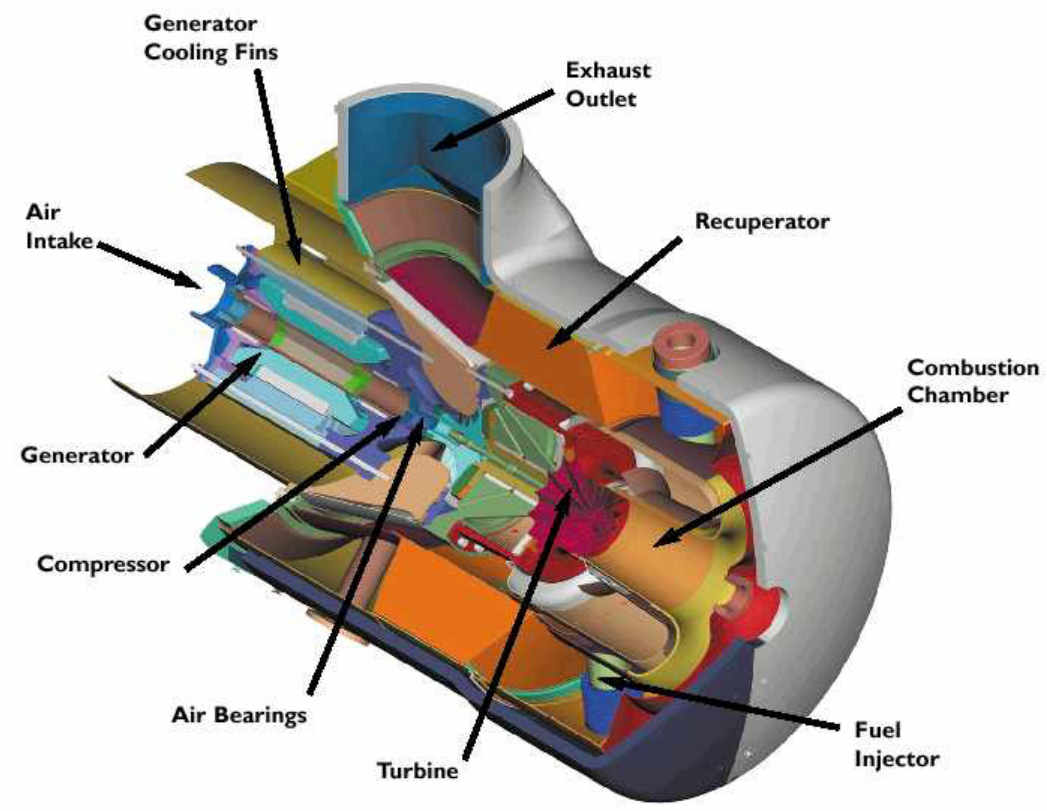

Figure 3. Typical Capstone Model C30 Microturbine Engine (Cutaway View)

2.2.2. Air Bearings

The microturbine utilizes gas foil bearings (air bearings) for high-reliability, low maintenance, and safe operation. This allows fewer parts and the absence of any liquid lubrication to support the rotating group. When the microturbine is in operation, a gas film separates the shaft from the bearings and protects them from wear.

2.2.3. Digital Power Electronics

The digital power electronics control the microturbine system operation and all subsystem operations. The digital power electronics change the variable frequency AC power from the generator to DC voltage, and then to constant frequency AC current.

During start up, the digital power electronics operate as a variable frequency drive, and motor the generator until the microturbine has reached ignition and power is available from the microturbine. The digital power electronics again operate as a drive during cooldown to remove heat stored in the recuperator and within the microturbine engine in order to protect the system components.

Capstone reserves the right to change or modify, without notice, the design, specifications, and/or contents of this document without incurring any obligation either with respect to equipment previously sold or in the process of construction.

2.2.4. Fuel System

The microturbine can efficiently use a wide range of approved hydrocarbon-based gaseous and liquid fuels. The microturbine includes an integral fuel delivery and control system. The available microturbine models include the following fuel types:

- High pressure natural gas (HPNG)
- Low pressure natural gas (LPNG)
- High pressure sour gas (HPSG)
- Landfill gas
- Digester gas
- Liquid fuel
- Propane (HD-5)
- Multi-fuel model enables use of LPNG and high pressure propane in a single microturbine

Contact your Capstone Authorized Service Provider for data on approved fuels and performance specifications.

2.2.5. Emissions

The Capstone Microturbine is designed to produce very clean emissions. The exhaust is clean and oxygen rich (approximately 18% O_2) with very low levels of air pollutants. Like all fuel combustion technology, the microturbine produces emissions (like nitrogen dioxide and carbon monoxide) from the fuel combustion process. The microturbine has ultra low nitrogen dioxide (NO_2) and carbon monoxide (CO) emission levels. Refer to the Emissions Technical Reference (410065) for detailed emission specifications.

2.2.6. Enclosure

The microturbine standard enclosure is designed for indoor and outdoor use, and conforms to NEMA 3R requirements.

The C30 hazardous location microturbine has a stainless steel pressurized enclosure, which houses the microturbine system, and is certified for Class I, Division 2 (CID2), or Class I, Zone 2 (CIZ2) environments. Refer to the C30/C65 Hazardous Location Application Guide (480010) for details.

Capstone reserves the right to change or modify, without notice, the design, specifications, and/or contents of this document without incurring any obligation either with respect to equipment previously sold or in the process of construction.

2.2.7. Combined Heating and Power (CHP)

Combined Heating and Power (CHP) allows the user to realize the benefits of usable electrical and thermal power from a single fuel source. The electricity provides on-site power generation, and the heat offsets or replaces local thermal loads such as space heating, pool heating and industrial process hot water. CHP requires an additional Heat Recovery Module (HRM). The HRM is provided by third party suppliers. In addition, the oxygen-rich exhaust together with ultra-low emissions makes the direct exhaust applicable for some food processing and greenhouse uses, such as heating, cooling (by absorption), dehumidifying, baking, or drying. Contact your Capstone Authorized Service Provider for details.

2.2.8. Hazardous Location Option

The hazardous location option enables use of the C30 microturbine in hazardous (CID2 or CIZ2) environments such as offshore oil platforms. It also provides for extended operation in high humidity environments. The stainless steel pressurized enclosure contains equipment to maintain correct pressurization, monitor gas and heat levels, and prevent corrosion. The hazardous location option is available as a Dual Mode (battery equipped) model for Stand Alone operation only. The battery contains internal contactors that are controlled remotely so that it can be completely disconnected during the purge cycle and in the event of a safety shutdown. Refer to the C30/C65 Offshore and Hazardous Location Application Guide (480010) for details.

2.2.9. Offshore Option

The offshore option enables use of the C30 microturbine in high humidity environments, including offshore oil platforms, but only in areas classified as non-hazardous. The offshore option contains heaters and specially treated electrical connectors to prevent corrosion. This option is available as a Dual Mode (battery equipped) model for Stand Alone operation only. The battery pack (with internal contactors) and fuel shutoff valve are operated by a hazardous location controller to ensure isolation on a shutdown. Refer to the C30/C65 Offshore and Hazardous Location Application Guide (480010) for details.

2.2.10. Capstone Remote Monitoring Software

Capstone Remote Monitoring Software (CRMS) is the optional Capstone proprietary software that can operate and control the microturbine from the RS-232 user port. This allows communication interface devices (a laptop plugged in with a null-modem cable or Serial to Ethernet Converter or a remote computer via a modem) to communicate via the RS-232 port.

CRMS is an easy to use, menu driven Windows-based software for a remote computer to monitor and control the Capstone Microturbine. The software can control from 1 to 30 microturbine systems, by direct connection or remotely via a modem. Copies of and licenses for this software are available for purchase from Capstone.

Capstone reserves the right to change or modify, without notice, the design, specifications, and/or contents of this document without incurring any obligation either with respect to equipment previously sold or in the process of construction.

2.2.11. Grid Connect Mode

When connected to a utility grid (Grid Connect mode), the microturbine operates according to three available dispatch modes: Base Loading, Load Following, and Time of Use. These dispatch modes are described in the following paragraphs.

2.2.11.1 Base Loading

Base Loading is the default dispatch mode for the microturbine in Grid Connect operation. In this mode, the microturbine generates power up to the value of the stored power demand, and the electric utility grid provides the remaining power to meet the total customer load.

2.2.11.2 Load Following

Load Following is implemented in applications where the microturbine produces more power than the customer facility can use. A setting called Utility Power Setpoint is used to fix the power provided by the utility grid until the microturbine reaches its power capacity. The Utility Power Setpoint also acts as a buffer to allow the microturbine to react to large swings in the facility load. An external power meter is required for this dispatch mode.

2.2.11.3 Time of Use

The Time of Use mode allows the microturbine user to selectively determine start/stop commands and/or power output levels for up to 20 timed events. Events are programmed by day of week, time of day, and power demand. When the microturbine is operating, the programmed events occur in sequential order according to the time of day. This enables efficient use of the microturbine to supplement power only during periods of the day when electricity from the utility is at a premium.

2.2.12. Dual Mode

The C30 Dual Mode microturbine includes a large battery pack used for unassisted start and for transient electrical load management, as well as a power converter and battery management system. The battery pack is a lead-acid type and completely sealed.

The Dual Mode model can function in Stand Alone mode to power connected loads at user selected voltage and frequency setpoints. It can power remote facilities such as construction sites, oil fields, offshore platforms, and other locations where the electric utility grid is not available.

With the Dual Mode System Controller (DMSC), the microturbine can be used for both Grid Connect power and Stand Alone power applications. The microturbine can be programmed to switch automatically upon loss/restoration of electric utility grid power.

2.2.13. MultiPac Power

C30 microturbines can be installed in groups of up to 20 units using a standard Capstone MultiPac communications cable. This MultiPac capability enables connected microturbines to operate as a single power generation source. A MultiPac configuration features a single control point and synchronous voltage and frequency output for all units. Individual microturbines share power, current, and load on both a dynamic and steady state basis.

Capstone reserves the right to change or modify, without notice, the design, specifications, and/or contents of this document without incurring any obligation either with respect to equipment previously sold or in the process of construction.

3. Microturbine Operation

The following paragraphs provide instructions required for the operation of the Capstone C30 Microturbine. Refer to Using the Display Panel on page 32 for details about operating the microturbine via the display panel.

3.1. Basic Microturbine Operation

Most microturbine applications require no regular interaction with an operator during normal operation. Built-in dispatch features include user (local) or remote functions with load management modes such as base loading, load following, and time of use.

Applications with the C30 hazardous location microturbine require the use of the Capstone hazardous location controller to monitor external inputs such as gas detection and pressure sensing and to intelligently control normal operation. The hazardous location microturbine operates in Stand Alone mode only, but all built-in microturbine dispatch modes remain the same, except for auto restart functionality, which is unavailable. Refer to the C30/C65 Offshore and Hazardous Location Application Guide (480010) for details.

3.1.1. Communications

There are two ways to communicate with the microturbine, either (1) via manual operation of the display panel (user), or (2) via digital communications through the user port or maintenance port on the UCB (remote).

A PC may be connected to the user port directly (with an RS-232 null modem cable or using a Serial-to-Ethernet converter) or via a phone line and optional modem. Communication is then possible by use of the optional Capstone Remote Monitoring Software (CRMS) on the PC, or other program that uses Capstone's open communication protocol.

The setup, control, and basic performance of the microturbine can be monitored and adjusted through the user or maintenance port on the UCB.

Primary user communications include:

- Start and stop functions
- Adjustment of power output
- Storage and display of operation history
- The configuration of operational parameters
- Battery management functions

Capstone reserves the right to change or modify, without notice, the design, specifications, and/or contents of this document without incurring any obligation either with respect to equipment previously sold or in the process of construction.

3.1.2. Operational Data

The display panel (or a computer connected directly or via modem) can be used to monitor many operational parameters during system operation. Only some of the routine operation and performance data items available for monitoring are listed below:

- Power Output (in kilowatts, or kW)
- Turbine Speed (in revolutions per minute or RPM)
- Turbine Exit Temperature (in °C or °F)
- Phase Voltages (in Volts) and Currents (in Amperes)

3.1.3. Control Device Authority and Priority

A PC connected to the user or maintenance port can function as a control device for the microturbine. A PC can view system data at any time, but only one device can control the microturbine operation (that is, providing start/stop command or changes to power demand).

The display panel has default control authority to issue operational commands to the microturbine. The user can start and stop the microturbine without logging on to the system (that is, no password is required). All other system adjustments require the user to log on to the system with the user password.

The user port will take control when a password is entered either from the Capstone Remote Monitoring Software (CRMS) or other software using the Capstone open communication protocol.

All system commands via the user port, such as start, stop, and adjustment of Power Demands, require entry of a user password. When the user port has control, the Display Panel does not have control and can only be used to view information. The system automatically cancels a log on after five minutes of inactivity.

3.1.4. Startup

A Start command can be issued from the display panel (user), or remotely through a PC/CRMS interface or digital inputs. When the command has been issued, the generator operates as a motor to bring the microturbine up to ignition speed, at which point fuel is introduced into the combustion chamber and ignited. When the Turbine Exit Temperature (TET) sensors detect an increase in temperature, the system is declared lit, and the microturbine accelerates. Once the MT enters the load state, it accelerates to full load. The start-up process from a cold start to full load requires approximately six minutes. The startup process can take longer for a Stand Alone MT, which can take as long as 20 minutes to recharge the battery packs to the level needed for full load operation.

3.1.5. Shutdown

When the microturbine is issued a Stop command, power output is reduced, followed by a period that the microturbine is motored at nominal speed to remove heat stored in the recuperator and microturbine engine in order to protect the system components.

Capstone reserves the right to change or modify, without notice, the design, specifications, and/or contents of this document without incurring any obligation either with respect to equipment previously sold or in the process of construction.

The overall cooldown period is up to ten minutes, but is affected by microturbine model and temperature at shutdown. A restart may be attempted at any time, and a start will occur after completion of the initial cooldown period. Auto Restart is not available for hazardous location microturbines with pressurized enclosures.

If the Stand Alone battery requires a recharge (after a stop command is issued), the microturbine will continue to operate with fuel in order to recharge the battery. The microturbine will enter the cool down period after the battery has reached a 90 to 95% state of charge. The battery can require as long as 20 minutes to recharge after a stop command has been issued before entering cooldown. This will be followed by a cooldown period of up to 10 minutes.

3.1.6. Emergency Stop (E-Stop)

The UCB contains input pins to which the user can connect an Emergency Stop (E-Stop) device. The E-Stop function enables the safe and immediate shut down of the microturbine in the event of an emergency. Activation of the E-Stop immediately shuts off fuel and electrical output. This will cause the compressor bypass valve to open, vent the compressed air out of the microturbine, and the turbine will coast to a stop.

After an emergency stop, the power to the microturbine must be turned off for 30 seconds before a restart can be attempted. Emergency stops should NEVER be used for routine shutdowns. Emergency stops increase stress on the system components and will result in reduced service life of the microturbine.

	CAUTION: Repeated use of the optional Emergency Stop switch will result in damage to the microturbine. Use only in emergency situations.

Also, after an emergency stop, you may want to close the external fuel isolation valve to shut off any additional fuel flow into the microturbine. The external fuel isolation valve must be returned to the open position before a restart of the microturbine is attempted.

3.1.7. Restart

The microturbine system can normally be restarted after a shutdown, while the battery recharges, or during the cool down period before the speed of the microturbine reaches zero. This allows for faster power output and helps to eliminate wear on the bearings.

3.2. Grid Connect Operation

The microturbine in Grid Connect operation allows electric utilities to expand generating capacity in small increments. This optimizes current infrastructure and reduces the need to upgrade specific site capacity and lowers overall costs. Refer to the Grid Connect Operation Technical Reference (410027) for details.

3.2.1. Grid Connect Dispatch

Operation of the Capstone Microturbine in parallel with an electric utility grid consists only of commanding the system on or off, and commanding an output power level. In most configurations these commands are mostly or entirely automated in various ways termed dispatch modes.

Capstone reserves the right to change or modify, without notice, the design, specifications, and/or contents of this document without incurring any obligation either with respect to equipment previously sold or in the process of construction.

	NOTE: If grid power is removed for any reason, the auto restart dispatch mode can automatically command the system ON when grid power is restored.

3.2.2. Configuring Grid Connect

To configure the microturbine for Grid Connect operation it is necessary to enable the Grid Connect Interlock and then command the system to Grid Connect mode either through the Display Panel or RS-232 commands via the user port.

3.2.3. Grid Connect Interlock

The Grid Connect Interlock consists of a pair of 5-Volt dry circuit contact terminals located on the User Connection Board. A low resistance closed circuit between these terminals permits Grid Connect operation, opening the circuit disallows Grid Connect operation. The terminals are found in the Communications Bay at the rear of the microturbine enclosure. **Your Capstone Authorized Service Provider should make this electrical connection.**

3.2.4. Grid Connect Mode Enable

To enable the Grid Connect mode, the microturbine must be correctly connected to a suitable live electric utility grid and the Grid Connect Interlock must be closed. Your Capstone Authorized Service Provider should make this electrical connection.

To enable the Grid Connect mode from the Display Panel, requires logging on with a password; then navigate to the System Data menu, then to the System Configuration submenu, and then to the Power Connect submenu. Select Grid Connect mode and then press the ACCEPT button. If the Grid Connect Interlock is open, the system will accept the command but post a GC Interlock fault, prohibiting a start.

3.2.5. Starting a Grid Connect System

The microturbine system in Grid Connect mode must be commanded to start. Even if the system is configured for automatic operation, the initial START command is required to enable the automatic mode. If the Auto Restart feature is enabled, the ON command is stored by the system even through a loss of Grid Power.

To start the system from the Display Panel, press and hold the INTERLOCK button, and then press the START button. (If your microturbine has been configured with a remote start/stop switch, simply set the switch to Start or On to start the system.)

3.2.6. Stopping a Grid Connect System

The microturbine system can be stopped at any time. In Grid Connect operation, an OFF command will override any dispatch mode settings, and is stored by the system.

The shutdown process includes a cool down period, which can last up to 10 minutes, depending on the operating temperature at shutdown. During the cool down cycle, the power output is reduced and fuel supply is off but the microturbine continues to rotate to dissipate excess heat.

Capstone reserves the right to change or modify, without notice, the design, specifications, and/or contents of this document without incurring any obligation either with respect to equipment previously sold or in the process of construction.

A restart can be attempted at any time during a cool down period.

To stop the system from the Display Panel, press and hold the INTERLOCK button, and then press the STOP button. (If your microturbine has been configured with a remote start/stop switch, simply set the switch to Stop or Off to stop the system.)

3.2.7. Grid Connect Power Demand

In Grid Connect operation, the microturbine system must be commanded to a specific output power level. Each dispatch mode includes a power level setting. Some dispatch modes include automatic output power level changes.

3.3. Stand Alone Operation

Stand Alone operation provides power to remote facilities such as construction sites, offshore oil platforms, or other locations where the electric utility grid is not available.

It requires the battery-equipped Dual Mode model or hazardous location microturbine. Stand Alone operation consists of commanding the system on or off, and then enabling or disabling the power output. These commands can be automated. Refer to the Stand Alone Operation Technical Reference (410028) for details.

3.3.1. Configuring Stand Alone

To configure the microturbine for Stand Alone operation it is necessary to enable the Stand Alone Interlock and then configure the system to Stand Alone mode through the display panel or RS-232 commands over the remote communications interface via the user port.

3.3.2. Stand Alone Interlock

The Stand Alone Interlock consists of a pair of 5 Volt dry circuit contact terminals. A low resistance closed circuit between these terminals permits Stand Alone operation. An opened circuit prevents Stand Alone operation. The terminals are found in the Communications Bay at the rear of the microturbine enclosure. **Your Capstone Authorized Service Provider should make this electrical connection.**

3.3.3. Stand Alone Mode Enable

To enable Stand Alone mode, the microturbine must be powered on (set the Stand Alone battery isolation switch to **ON**) and the Stand Alone Interlock closed. To enable Stand Alone mode from the display panel logon with a password; then navigate to the System Data menu, System Configuration submenu, and the Power Connect submenu. Select Stand Alone mode, then press the **ACCEPT** button. If the Stand Alone Interlock is open, the system will accept the command but post a SA Interlock fault. If no battery is detected, an internal No Battery fault will be reported.

Capstone reserves the right to change or modify, without notice, the design, specifications, and/or contents of this document without incurring any obligation either with respect to equipment previously sold or in the process of construction.

3.3.4. Stand Alone Battery

A microturbine configured for Stand Alone operation includes a large battery pack that stores energy for microturbine startup when disconnected from the electric utility grid. It also provides an electrical buffer for sudden increases or decreases in load during Stand Alone operation. Management of the battery and its state of charge is automatic within the microturbine. An awareness of these battery management functions will promote an understanding of why the system may appear to behave autonomously. For example, the microturbine will always attempt to fully recharge the battery after a user commanded shut down and before the microturbine enters the cool down state.

3.3.5. Stand Alone Battery Isolation Switch

The Stand Alone microturbine includes a battery isolation switch to disable the microturbine for service or transport. See Figure 4. The switch is located on the battery behind the front door at the bottom front of the enclosure. Set the switch to **ON** for system operation. Be sure to set the switch to **OFF** when not operating the system to maximize battery life.

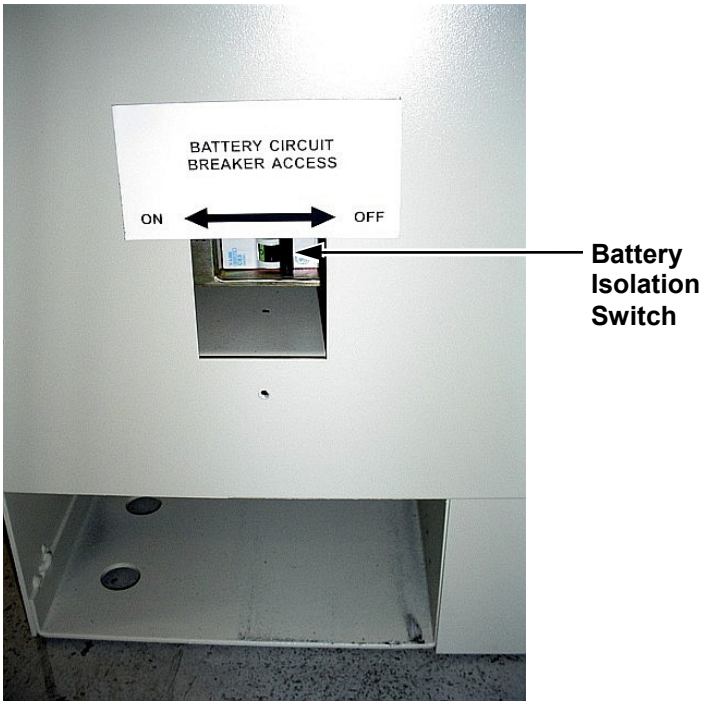

Figure 4. Battery Isolation Switch Access

3.3.6. System Sleep in Stand Alone Mode

Reducing battery draw to near zero during prolonged periods of non-use can extend the microturbine battery charge significantly. This is called Sleep Mode. Sleep Mode is automatic, but the time of inactivity can be adjusted using CRMS. If the battery isolation switch is set to **ON**, and the Display Panel is dark, the system is most likely in Sleep Mode. In Sleep Mode, the battery pack needs to be recharged periodically. Refer to the section on Battery Maintenance for more data on recharging the Battery.

Capstone reserves the right to change or modify, without notice, the design, specifications, and/or contents of this document without incurring any obligation either with respect to equipment previously sold or in the process of construction.

3.3.7. Waking a Stand Alone Microturbine

If the Stand Alone system is in Sleep Mode, pressing the **BATT START** button at the far left of the Display Panel (for 2 seconds or less) will wake it up. If communicating with the microturbine remotely using a modem, the modem ring indicator will wake up a sleeping Stand Alone system.

	CAUTION: Permanent closure of the battery start contacts (in the following paragraph) will completely discharge the UCB battery. Therefore, the battery start contacts may only be closed for a period of 0.1 to 2.0 seconds.

Alternately, momentarily closing the battery start contacts in the communication bay will wake up the system. This must be a momentary closure of 0.1 to 2.0 seconds only, as permanent closure of these contacts will completely discharge the battery. **Your Capstone Authorized Service Provider should make this electrical connection.**

3.3.8. Starting a Stand Alone System

The microturbine system in Stand Alone operation must be commanded to start. Even if the system is configured for automatic operation, an initial start command is required to enable the automatic mode. If the Auto Restart feature is enabled, the **ON** command is stored by the system even through a loss of system power.

To start the system from the Display Panel, press and hold the **INTERLOCK** button, and then press the **START** button. (If your microturbine has been configured with a remote start/stop digital input, simply close to start the system.)

3.3.9. Enabling Stand Alone Power Output

To enable power output, first start the microturbine, and wait for the engine to warm up and for the base battery state of charge to reach at least 60%. A Not Ready to Load message is displayed. Press and hold the **INTERLOCK** button, and then press the **ENABLE** button.

	NOTE: The Enable command can be issued at any time. The system will transition to power output when battery voltage and state of charge are ready.

When Auto Enable Power is set to ON, the microturbine will automatically issue the Enable command when the system is ready to support the connected loads. Auto Enable Power is set using CRMS.

3.3.10. Stand Alone System Power Level

In Stand Alone mode, the microturbine system will produce (up to its capacity) whatever current is necessary to maintain the commanded voltage and frequency. The output power is determined by the connected load(s).

3.3.11. Disabling Stand Alone Power Output

To disable power output, press and hold the **INTERLOCK** button, and then press the **DISABLE** button. All power output will immediately cease, but the system will continue operating with fuel.

Capstone reserves the right to change or modify, without notice, the design, specifications, and/or contents of this document without incurring any obligation either with respect to equipment previously sold or in the process of construction.

3.3.12. Stopping a Stand Alone System

The microturbine system can be stopped at any time. To stop the system from the Display Panel, press and hold the **INTERLOCK** button, and then press the **STOP** button. (If your microturbine has been configured with a remote start/stop switch, simply set the switch to Stop or Off to stop the system.)

A system **OFF** command first disables power output. The system then charges the battery, which can take up to 20 minutes. Finally, the turbine shutdown process includes a cool down period, which can last up to 10 minutes.

3.4. Dual Mode Operation

If the microturbine is equipped with the Stand Alone option, and the optional Dual Mode System Controller (DMSC) is installed, a setting in the microturbine system software enables the system to reconfigure itself to either Grid Connect or Stand Alone operation mode. This is called Dual Mode.

In the case of grid loss/recovery, microturbine operation in Dual Mode is identical to the operation in Grid Connect mode or Stand Alone mode, depending on the state of the utility grid. Operation of the Dual Mode feature consists of switching the microturbine (and protected loads) from Grid Connect operation to Stand Alone operation, or back.

	NOTE: Note that both the Grid Connect and Stand Alone interlock terminals must be closed for Dual Mode operation.

3.4.1. Capstone DMSC

The Capstone DMSC is an accessory that enables the microturbine to automatically transition from Grid Connect operation to Stand Alone operation when a utility power outage occurs. During a utility power outage, the microturbine normally operates in Stand Alone mode to provide power to Protected Loads. The DMSC provides the logic for an electrically-operated circuit protection device to isolate the protected loads during Stand Alone operation. When utility power is restored, the DMSC automatically returns the microturbine and protected loads to Grid Connect operation. The DMSC also allows the microturbine to be used as an automatically dispatched standby generator for protected loads.

The Dual Mode Controller can:

- Sense the loss of electric utility grid voltage, and then send a trip signal to a circuit protection device to disconnect the microturbine and its connected (protected) loads from the electric utility grid.
- Start the system to supply Stand Alone power.
- Sense the return of electric utility grid voltage, and then shut down the microturbine.
- Issue a command to close the circuit protection device to reconnect the MT and protected loads to the electric utility grid.
- Start the system to supply electric utility grid parallel power.

The microturbine can be configured to automatically start and load itself in either mode.

Capstone reserves the right to change or modify, without notice, the design, specifications, and/or contents of this document without incurring any obligation either with respect to equipment previously sold or in the process of construction.

3.4.2. Configuring Dual Mode

The microturbine system settings must be established for both Grid Connect parameters and Stand Alone parameters, since the system will be operating in both modes at different times. Contact your Capstone Authorized Service Provider for data on establishment of these parameters.

3.4.3. Setting the System for Dual Mode Operation

To set the system to Dual Mode, use either the Display Panel or the user port. If using the Display Panel, you must log on with a password. Navigate to the top-level System Data menu, then the System Configuration submenu, and then the Power Connect submenu, and then select **DUAL MODE** and press the **ACCEPT** button.

3.4.4. Switching Times for Dual Mode

When a utility outage occurs, protected loads will be without power for up to seven minutes as the system transitions from Grid Connect to Stand Alone mode. When utility power is restored, the protected loads return to grid power within two seconds, but the microturbine will be offline for up to 32 minutes as it reconfigures to Grid Connect Mode and recharges the internal battery.

3.5. MultiPac Operation

MultiPac operation allows controlling the individual microturbines through the master unit. Observation and control of each microturbine in a MultiPac can be accomplished by the connection of a communications interface device through the master unit. Any microturbine can be designated as the master unit. This unit then becomes the physical and logical control connection point for the entire MultiPac. The MultiPac capability features a single control point (the master unit) and the combined synchronous output of the units in the MultiPac. Individual microturbines share power, current, and load on both a dynamic and steady-state basis. Refer to the MultiPac Operation Technical Reference (410032) for details.

Standard C30 models can be configured into an array of up to 20 microturbines. Such an array will operate as a single power generation source. Refer to the C30/C65 Offshore and Hazardous Location Application Guide (480010) for details about operating multiple C30 hazardous location microturbines using the Capstone hazardous location controller.

Contact your Capstone Authorized Service Provider for additional information on establishment of a MultiPac system.

3.5.1. MultiPac Grid Connect Operation

In Grid Connect operation, each microturbine independently synchronizes to the grid. MultiPac functionality provides a single interface point for Start, Stop, and Power Demand control. It is not necessary to connect a modem or signals from an external power meter to each individual microturbine in a MultiPac, only to the master unit.

Capstone reserves the right to change or modify, without notice, the design, specifications, and/or contents of this document without incurring any obligation either with respect to equipment previously sold or in the process of construction.

3.5.2. MultiPac Stand Alone Operation

In Stand Alone operation, MultiPac functionality provides the capability to synchronize the voltage source outputs of the individual microturbines such that they share power and current on both a dynamic and steady state basis. The master microturbine unit broadcasts synchronization data to the other units over a dedicated Capstone-proprietary digital communications bus.

3.5.3. MultiPac Redundancy

In MultiPac operation, if an individual microturbine fails (shuts down due to a fault), the remaining units will continue to operate. If the master unit fails and communication is not possible, the entire MultiPac system will shut down. If the master unit fails, another unit in the MultiPac system can be manually programmed to be the new master unit, however the MultiPac system must not be operating while this re-configuration is performed.

3.5.4. MultiPac Enable/Disable

Individual microturbines must be disabled from a MultiPac system for service and maintenance. When service or maintenance is completed, the individual microturbines must be added back into the MultiPac system (i.e., re-enabled). Use the display panel to enable/disable a microturbine in a MultiPac system, or contact your Capstone Authorized Service Provider.

3.5.5. Changing the Master Unit in a MultiPac using the Display Panel

In a MultiPac system, one microturbine is the master unit. To assign a different microturbine to be the master unit, perform the following steps. The steps are presented in functional groups of steps for clarity.



NOTE: The following steps are performed on the microturbine that was the old master unit in the MultiPac. Alternatively, comparable steps can be performed using CRMS software on a computer connected to the microturbine user port.

1. Disable the old Master from the MultiPac:
   a. Log on with the User Password (refer to Logging On with a Password on page 35).
   b. Go to the System Data top-level menu.
   c. Navigate to the System Configuration second-level menu.
   d. Navigate to the MultiPac <Enable/Disable> third-level menu.
   e. Use the (+) or (-) buttons to select Disable; then press the ACCEPT button.

Capstone reserves the right to change or modify, without notice, the design, specifications, and/or contents of this document without incurring any obligation either with respect to equipment previously sold or in the process of construction.

	NOTE: The following steps are performed on the Display Panel of the microturbine that will be the new master unit in the MultiPac.

2. Set the microturbine that will be the new master unit to number 1:
   a. On the new master unit, log on with the User Password (refer to Logging On with a Password on page 35).
   b. Go to the System Data top-level menu.
   c. Navigate to the System Configuration second-level menu.
   d. Navigate to the Turbine Number <Number> third-level menu.
   e. Press the "1" Numeric Keypad button to set the Turbine Number to 1; then press the ACCEPT button.
3. Enable MultiPac from the new master unit:
   a. Go to the System Data top-level menu.
   b. Navigate to the System Configuration second-level menu.
   c. Navigate to the MultiPac <Enable/Disable> third-level menu.
   d. Use the (+) or (-) buttons to select Enable, then press the ACCEPT button.
4. Reboot the new master unit:
   a. Go to the System Settings top-level menu.
   b. Navigate to the Reboot <No/Yes> second-level menu. Use the (+) or (-) buttons to select Yes, then press the ACCEPT button.
   c. If there had been a telephone line connected to the modem in the original master unit, move the telephone line connection to the modem in the new master unit.
   d. If there are any other cables (e.g., from a power meter or a global E-Stop device) connected to the original master unit, also move these connections from the original to the new master unit.

	ELECTRICAL WARNING: Some connections require that the entire system be de-energized in order to be moved safely. To prevent injury to personnel or damage to equipment, completely remove power from the original and new master units, and from the connected equipment, before moving any cables.

5. At this point, the microturbine that had been the original master unit is not part of the MultiPac. To include it in the MultiPac, continue with these steps on its Display Panel.
   a. Go to the System Data top-level menu.
   b. Navigate to the System Configuration second-level menu.
   c. Navigate to the Turbine Number <Number> third-level menu.
   d. Use the Numeric Keypad to set the Turbine Number to a unique value; then press the ACCEPT button.
   e. Navigate to the MultiPac <Enable/Disable> third-level menu. Use the (+) or (-) buttons to select Enable, then press the ACCEPT button.

Capstone reserves the right to change or modify, without notice, the design, specifications, and/or contents of this document without incurring any obligation either with respect to equipment previously sold or in the process of construction.

3.6. Hazardous Location Operation

⚠	WARNING: The display panel on the Hazardous Areas unit is intended only for maintenance use. The display cover must not be opened unless the area is known to be free of flammable gases.

Refer to the C30/C65 Offshore and Hazardous Location Application Guide (480010) for details about hazardous location operation. The display panel on the C30 hazardous location microturbine is used for maintenance and troubleshooting only and is not used to operate the microturbine. Instead, the Capstone hazardous location controller is used to monitor and control the operation of the microturbine. The cover over the display panel on a hazardous location microturbine must never be opened unless the area is known to be free of flammable gases.

For hazardous location (CID2 or CIZ2) applications, the hazardous location controller is connected to the UCB user and maintenance ports on the microturbine. A connection for remote monitoring via CRMS is made available through the Ethernet switch in the controller, and not directly to the microturbine.

4. Using the Display Panel

Use of the display panel (Figure 5 and Figure 6) is described in the following paragraphs.

▷	NOTE: Depending on date of manufacture, your C30 microturbine will have the Pushbutton Display Panel shown in Figure 5 or the Touch Pad Display Panel shown in Figure 6.

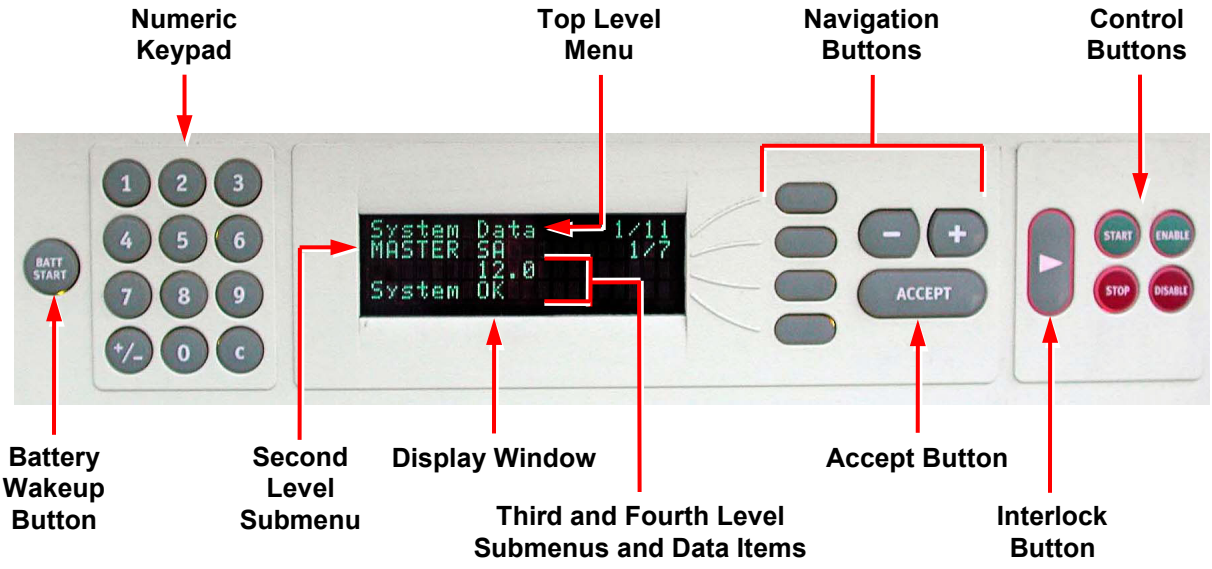

Figure 5. Pushbutton Display Panel

Capstone reserves the right to change or modify, without notice, the design, specifications, and/or contents of this document without incurring any obligation either with respect to equipment previously sold or in the process of construction.

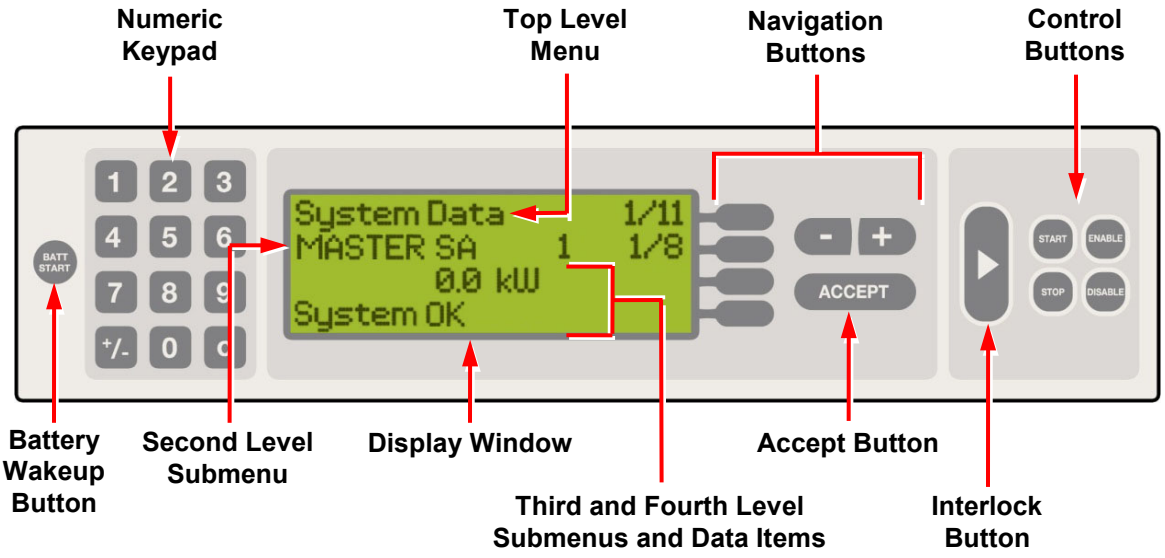

Figure 6. Touch Key Display Panel

The Display Panel is located on the front of the package above the engine air inlet, and is used to control microturbine operation and access data stored within the system. The Display Panel includes a keypad, a display window, navigation buttons, and system control buttons. The paragraphs below describe Display Panel operation.

For hazardous location (CID2 or CIZ2) applications with the pressurized enclosure, display panel information is visible through a plastic window. However, access to the panel navigation buttons and numeric keypad is only allowed during maintenance operations, and only if the area has been tested to be free of flammable gases.

4.1. Display Panel Areas

The **BATT START** button, at the far left of the Display Panel, is used to wake a Stand Alone system from sleep mode (refer to Waking a Stand Alone Microturbine on page 27).

The **Numeric Keypad**, located to the left of the Display Window, is for data input. The system accepts data input only on specific screens, and the input line must be selected, indicated by the flashing line. Data input from the Numeric Keypad requires logging-on with a password (refer to Logging On with a Password on page 35).

The **Display Window** is in the center of the Display Panel. The Display Window can display four lines of twenty characters, each of which indicate menu hierarchy position, data display, and data input.

The **Navigation Buttons** are located to the right of the Display Window, and consist of four buttons arranged vertically, each with a line to its left indicating a line of data in the Display Window. These four buttons, plus the buttons just to their right labeled (**-**), (**+**), and ACCEPT, are the navigation buttons; they are used for selecting various display screens or data items.

Capstone reserves the right to change or modify, without notice, the design, specifications, and/or contents of this document without incurring any obligation either with respect to equipment previously sold or in the process of construction.

The **Control Buttons** are to the right of the Navigation Buttons. The control buttons start and stop the MicroTurbine, and enable and disable power output in Stand Alone mode. For security the interlock button must be pressed along with the control button. If a control button is pressed alone, the command cannot be detected by the software.

With the exception of the BATT START button, a beep sound will be heard when any button is pressed.

The display contrast level can be changed by pressing the interlock button and a navigation button as follows:

- Press the interlock button and Line 1 button, or interlock button and Line 2 button to increase the contrast level.
- Press the interlock button and Line 3 button, or interlock button and Line 4 button to decrease the contrast level.

	NOTE: To change the contrast level, the Interlock button must be pressed before pressing a navigation button.

4.2. Menu Navigation

Movement around the top-level menu screens can be accomplished by use of the Navigation Buttons (Figure 5 and Figure 6). The top line of the display always shows the name of the current top-level menu. To move around the top-level menus, press the topmost of the four navigation buttons. The menu position indicator numbers at the right end of the top line will flash. When the numbers are flashing, press the (**-**) or (**+**) buttons to move around the menus.

Each of the top-level menu screens has a number of submenus. The second line in the display window shows the current submenu. Movement around the submenus is similar to the top-level menus except you must press the second-line navigation button to select line two of the display. When the numbers are flashing, press the (**-**) or (**+**) buttons to move around the submenus.

When you reach the desired menu, press the **ACCEPT** button to choose the menu, or wait 20 seconds for the system to automatically accept the menu selected.

The third and fourth levels display the selected performance data or allow input, like passwords or adjustment of power settings. The descriptions of each screen or submenu are grouped according to the top-level menu.

4.3. Display Panel Data Entry

Data input requires selection of the appropriate level with the Navigation Buttons, causing the display line to flash. Enter data using the Numeric Keypad, or scroll through available data entry options with the (**-**) or (**+**) buttons and press the **ACCEPT** button when finished. To make changes to any system set-up or operational mode requires the entry of a user password. Numeric entries can be cancelled by use of the (-) button.

Capstone reserves the right to change or modify, without notice, the design, specifications, and/or contents of this document without incurring any obligation either with respect to equipment previously sold or in the process of construction.

4.3.1. Logging On with a Password

To enter commands from some of the Display Panel menus, the user must log on with a valid password (the description of the various menus on the following pages includes whether logging on with a password is required).

	NOTE: The default user password (at the Display Panel) is set to 87712370. In the event of a lost user password, your Capstone Authorized Service Provider can reset the user password to this default.

To log on with a password, follow these steps:

1. At the top-level System Data Menu, push the second level Navigation Button and the (-) or (+) buttons until you come to the Enter Password submenu.
2. Select the third level Navigation Button (the display indicates "*********"). Enter the current password (see the above notes).
3. The display of ******** becomes -------- as you enter the password.
4. Press the ACCEPT Button. The display will indicate "PROTECTED LEVEL SET".
5. You are now logged into the system.

Not all data items can be modified at the user password level.

4.3.2. Changing the Password

A user can change the user password at any time using the following steps:

1. The user must be logged-in (with a password) to change the password.
2. Go to the top-level **System Settings** menu, push the second level Navigation Button and the (**-**) or (**+**) buttons until you come to the User Password submenu.
3. Select third level Navigation Button (********Change**) and enter new password.
4. Press the ACCEPT button. A confirmation message will be posted that states the password needs to be verified.
5. Press the fourth level Navigation Button. Verify the Password on the fourth level (********Verify**); re-enter the "new" password to verify.
6. Press the ACCEPT button. A confirmation message will be displayed that states the password has been verified.

If the new password is not verified in this manner, the old password will remain in effect.

4.4. Display Panel Menus – Overview

The Display Panel menu hierarchy shown in Figure 7 represents the typical structure of the system software menus and submenus for the Model C30 microturbine. These menus and submenus are also detailed in text following the menu hierarchy chart.

Capstone reserves the right to change or modify, without notice, the design, specifications, and/or contents of this document without incurring any obligation either with respect to equipment previously sold or in the process of construction.

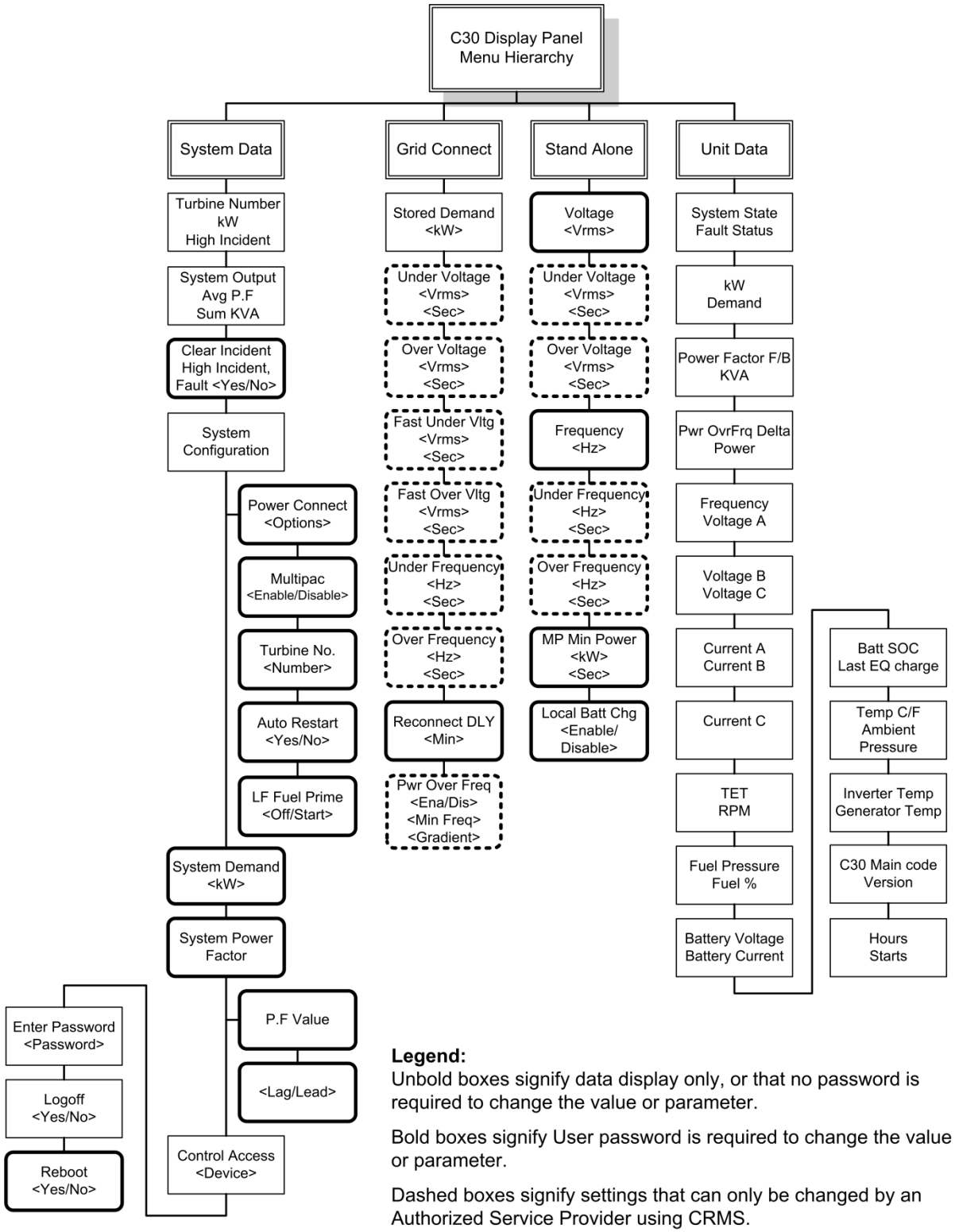

Legend:

Unbold boxes signify data display only, or that no password is required to change the value or parameter.

Bold boxes signify User password is required to change the value or parameter.

Dashed boxes signify settings that can only be changed by an Authorized Service Provider using CRMS.

Figure 7. Display Panel Menu Function Hierarchy

Capstone reserves the right to change or modify, without notice, the design, specifications, and/or contents of this document without incurring any obligation either with respect to equipment previously sold or in the process of construction.

4.5. System Data Menu

	NOTE: The user will be able to view the data on various screens of the System Data Menu without logging on; to change some of the settings requires logging on with a user password.

On power-up, the display panel defaults to the top-level System Data menu. The System Data menu displays the total output for a system of 1 to 20 microturbines along with other system states.

The System Data submenus are detailed below with a sample of the actual display for each submenu. The same applies for the other top level menus, as applicable.

	NOTE: In the following submenus, the first line always displays System Data menu.

4.5.1. Turbine Number

```
System Data        1/4
MASTER SA  1      1/10
       28.6 kW
System OK
```

The Turbine Number submenu displays the microturbine number and whether it is currently configured for GC (Grid Connect) or SA (Stand Alone), and whether it is a Single unit or a MultiPac (MP) unit or the Master of a MultiPac system. This data is displayed on the second line of the display panel. This submenu also gives the Total Output of the system in kilowatts (kW) on the third line. The fourth line displays the High Incident data, which is the highest system severity level (SSL) fault code and the highest fault type currently reported by the system. This is information that must be forwarded to your Capstone Authorized Service Provider.

4.5.2. System Output

```
System Data        1/4
Power Factor      2/10
       0.00 PF
       0.00 KVA
```

The System Output submenu displays the power factor and kVA output of the microturbine system. Power factor (PF) is displayed on the third line and KVA output is displayed on the fourth line. If the microturbine is the master unit of a MultiPac, PF is the average power factor and KVA is the sum of the kVA output of all microturbines in the MultiPac. Otherwise, PF and KVA are the power factor and kVA output of the single microturbine.

Capstone reserves the right to change or modify, without notice, the design, specifications, and/or contents of this document without incurring any obligation either with respect to equipment previously sold or in the process of construction.

4.5.3. Clear Incident

```
System Data        1/4
Clear Incident    3/10
System OK
NO
```

The Clear Incident submenu attempts to clear the highest-level fault and to return the system to standby. The third line displays the system severity level (SSL) fault code and displays the highest fault type and the highest identification number of the faults currently reported by the system. If the fault can be cleared, the fault # line will be updated with the new highest SSL fault or System OK if all faults were cleared. If the same fault remains, the fault cannot be cleared. The user must be logged in with the current password to change any setting on the Clear Incident submenu.

4.5.4. System Configuration

	NOTE: The user will be able to view the data on the various screens of the System Configuration Menu without logging on with a password; to change any settings requires logging on with a user password.

The System Config submenu contains system settings and allows the user to adjust the third level data, as detailed below:

4.5.4.1 Power Connect Submenu

```
System Data        1/4
System Config     4/10
Power Connect      1/5
DUAL MODE
```

The Power Connect submenu allows the user to change the operating mode of the microturbine. The user must be logged in with the current password to change this setting. The operating modes are as follows:

- Invalid State (Initial Factory Setting)
- Stand Alone
- Grid Connect
- Dual Mode

	NOTE: The initial Factory Setting of INVALID is intended to ensure the true Power Connect option is set to match your specific application.

Capstone reserves the right to change or modify, without notice, the design, specifications, and/or contents of this document without incurring any obligation either with respect to equipment previously sold or in the process of construction.

4.5.4.2 MultiPac Submenu

```
System Data        1/4
System Config     4/10
MultiPac           2/5
DISABLE
```

The MultiPac <ENABLE/DISABLE> submenu allows the user to remove or add a microturbine to a MultiPac. This allows maintenance of a microturbine unit in a MultiPac without having to shut down all microturbines in the system. The user must be logged in with the current password to change this setting.

4.5.4.3 Turbine Number Submenu

```
System Data        1/4
System Config     4/10
Turbine Number     3/5
          1
```

The main controller microturbine in a MultiPac system is designated as the "Master", and must be assigned as number "1". Other microturbines may be assigned in any order in a MultiPac system. However, each microturbine must have a unique turbine number. The user must be logged in with the current password to change this setting.

4.5.4.4 Auto Restart Submenu

```
System Data        1/4
System Config     4/10
Auto Restart       4/5
Yes
```

The Auto Restart <Yes/No> submenu enables or disables the system's ability to automatically attempt a restart after an incident-driven shutdown. The microturbine, however, will not attempt a restart if the fault that caused the shutdown is a serious (high level) fault, even if Auto Restart is enabled by this submenu. The user must be logged in with the current password to change this setting.

4.5.4.5 Liquid Fuel Prime Submenu

```
System Data        1/4
System Config     4/10
LF Fuel Prime      5/5
OFF
```

The Liquid Fuel Prime submenu controls liquid fuel priming on liquid fuel systems only. This parameter is set to START to begin the liquid fuel priming sequence. It is set to OFF to stop/disable liquid fuel priming. The user must be logged in with the current password to change this setting.

Capstone reserves the right to change or modify, without notice, the design, specifications, and/or contents of this document without incurring any obligation either with respect to equipment previously sold or in the process of construction.

4.5.5. System Demand

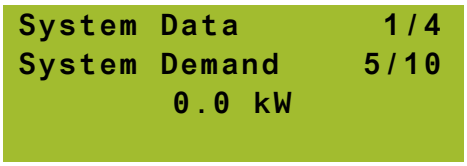

The System Demand submenu allows the user to set the system power demand in kW while in grid connect mode. This setting is active until the microturbine is shut down. Each time the microturbine starts up, any previous System Demand setting is no longer available and the kW value is set to zero. On startup, or any time System Demand is set to 0.0 kW, the microturbine uses the Stored Demand setting (refer to page 43). The user must be logged in with the current password to change system demand.

In a MultiPac, the system demand setting of the microturbine configured as the MultiPac master is used as the system demand setting for the entire MultiPac. When it overrides the stored demand setting, the system demand setting of the MultiPac master is used as the power output demand for the MultiPac. In this case, each microturbine in the MultiPac is commanded to supply an equal fraction of the total power output as specified by the System Demand setting of the master microturbine. For example, if the System Demand setting of the master microturbine in a MultiPac of six microturbines is 150 kW, the power demand for each microturbine would be 25 kW, or 1/6th of the System Demand setting.

In a MultiPac, the System Demand setting for the MultiPac is changeable and viewable from the master microturbine only. A microturbine operating as a MultiPac-enabled slave will only display its fractional portion of the total power demand at the System Demand submenu. Also, any change made using the System Demand submenu of a MultiPac-enabled slave microturbine during MultiPac operation will have no effect.

4.5.6. System Power Factor

The System Power Factor submenus are described in the following paragraphs. These submenus are used to enter the power factor value and select whether the power factor will be leading or lagging.

4.5.6.1 Power Factor Value Submenu

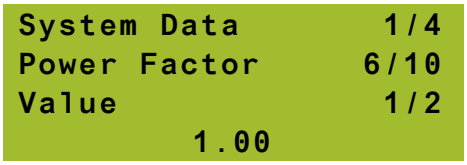

The Power Factor Value Submenu allows the user to set the value of the power factor. The value is adjustable from 0.80 to 1.00 in increments of 0.01. The Lagging/Leading Submenu described in the paragraph below is used to determine if this value will be leading or lagging. The user must be logged in with the current password to change the power factor value.

Capstone reserves the right to change or modify, without notice, the design, specifications, and/or contents of this document without incurring any obligation either with respect to equipment previously sold or in the process of construction.

4.5.6.2 Lagging/Leading Submenu

```
System Data          1/4
Power Factor        6/10
Lag/Lead             2/2
LAG
```

The Lagging/Leading Submenu allows the user to select lagging or leading for the power factor. On the fourth line of the display, select LAG for lagging or LEAD for leading. The user must be logged in with the current password to change this setting.

4.5.7. Control Access

```
System Data          1/4
Control Access      7/10
Display Panel
```

The Control Access submenu displays which communication device currently has control authority for changing settings of the microturbine.

- Display Panel
- User Port
- Maintenance Port

4.5.8. Enter Password Submenu

```
System Data          1/4
Enter Password      8/10
        ********
```

The Enter Password submenu allows the user to log on and access the microturbine controls. This submenu is used to enter the user password only.

	NOTE: The default user password (at the Display Panel) is set to 87712370. In the event of a lost user password, your Capstone Authorized Service Provider can reset the user password to this default. Not all data items can be modified at the user password level.

Capstone reserves the right to change or modify, without notice, the design, specifications, and/or contents of this document without incurring any obligation either with respect to equipment previously sold or in the process of construction.

4.5.9. Logoff

```
System Settings   1/4
Logoff           9/10
NO
```

The Logoff <NO/YES> submenu returns the system to base password mode, disabling all password protected parameter adjustments. The user should manually log off using this menu after making any required changes.

4.5.10. Reboot Submenu

```
System Settings   1/4
Reboot          10/10
NO
```

The Reboot <NO/YES> submenu allows the user to reset the system when the system is in a standby or fault state. Reboot does NOT change user-entered settings to the factory default settings. The user must be logged in with the current password to change this setting.

4.6. Grid Connect Menu

⚠	ELECTRICAL WARNING: Protective Relay settings can only be changed by a Capstone Authorized Service Provider (ASP) using CRMS. Do not attempt to change any Grid Connect Protective Relay functions yourself. Injury to personnel and/or damage to equipment can occur.

▶	NOTE: The primary Grid Connect Protective Relay function is to ensure that the microturbine does not energize utility wires de-energized by the utility.

The top-level **Grid Connect** menu establishes operation parameters for the Grid Connect mode. This menu is applicable only when the microturbine operates in Grid Connect mode. The Grid Connect Protective Relay settings are displayed here, and can only be changed using CRMS.

Refer to the following reference documents as required:

- Grid Connect Operation Technical Reference (410052)
- Model C30 Electrical Technical Reference (410000)
- Protective Relay Functions (410033)

Capstone reserves the right to change or modify, without notice, the design, specifications, and/or contents of this document without incurring any obligation either with respect to equipment previously sold or in the process of construction.

The Grid Connect submenus are described in the following paragraphs.

	NOTE: In the following submenus, the first line always displays the Grid Connect top level menu.

4.6.1. Stored Demand

```
Grid Connect        2/4
Stored Demand       1/9
       30.0 kW
```

The Stored Demand submenu allows entry of the power output demand level in kilowatts. A password is required to adjust this parameter from the Display Panel. Power output is adjustable from 0.0 to 2,000,000.0 kW to include the output capacity of the MultiPac configuration, as well as allow for future increases in the power generating capability of Capstone turbines.

This setting is permanently stored in memory, even after a shut down, and is available for use by the microturbine after it starts up. The System Demand setting (refer to page 28), if greater than zero, will override the Stored Demand setting until the microturbine is shut down.

In a MultiPac, the Stored Demand setting of the microturbine configured as the MultiPac master is used as the Stored Demand setting for the entire MultiPac. If not overridden by the System Demand setting, the Stored Demand setting of the MultiPac master is used as the power output demand for the MultiPac. In this case, each microturbine in the MultiPac is commanded to supply an equal fraction of the total power output as specified by the Stored Demand setting of the master microturbine. For example, if the Stored Demand setting of the master microturbine in a MultiPac of six microturbines is 600 kW, the power demand for each microturbine would be 100 kW, or 1/6th of the Stored Demand setting.

In a MultiPac, the Stored Demand setting for the MultiPac is changeable and viewable from the master microturbine only. Each microturbine has its own, permanently saved, Stored Demand setting, even when it is configured as a MultiPac-enabled slave. However, a microturbine operating as a MultiPac-enabled slave will only display its fractional portion of the total power demand at the Stored Demand submenu. Also, an individual microturbine's Stored Demand setting cannot be changed at its Stored Demand submenu if it is configured as a MultiPac-enabled slave.

Capstone reserves the right to change or modify, without notice, the design, specifications, and/or contents of this document without incurring any obligation either with respect to equipment previously sold or in the process of construction.

4.6.2. Under Voltage Submenu

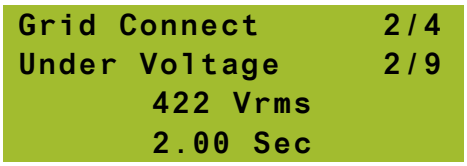

	NOTE: The Under Voltage submenu is read only, and no settings can be changed using the display panel. Protective relay settings can only be changed by an Authorized Service Provider using CRMS.

The Under Voltage submenu shows the line-to-line voltage trip point and associated delay time. If the RMS voltage between any phases falls below this setting, the delay timer is started. If the voltage has not recovered at the end of this time, the system will shut down. This is adjustable from 352 up to the Over Voltage setpoint in 1 Volt increments. Initial Factory Setting is 428 VAC line-to-line.

Under Voltage Delay establishes the time allowed for any phase voltage to fall below the Under Voltage limit. The delay is adjustable from 0.3 up to 10 seconds in 0.01 second increments. Initial Factory Setting is 1.9 seconds. This setting can only be changed by a Capstone ASP using CRMS.

4.6.3. Over Voltage Submenu

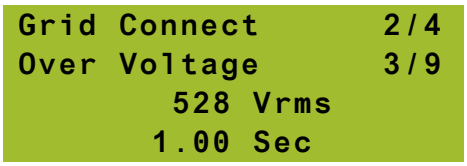

	NOTE: The Over Voltage submenu is read only, and no settings can be changed using the display panel. Protective relay settings can only be changed by an Authorized Service Provider using CRMS.

The Over Voltage submenu shows the line-to-line voltage trip point and associated delay time. If the RMS voltage between any phases rises above this setting the delay timer is started. If the voltage has not subsided by the end of this time, the system will shut down. This is adjustable from 528 down to the Under Voltage setpoint in 1 Volt increments. Initial Factory Setting is 524 Volts.

Over Voltage Delay establishes the time allowed for any phase voltage to rise above the Over Voltage limit. The delay is adjustable from 0.3 to 10 seconds in 0.01 second increments. Initial Factory Setting is 1.9 seconds. This setting can only be changed by a Capstone ASP using CRMS.

Capstone reserves the right to change or modify, without notice, the design, specifications, and/or contents of this document without incurring any obligation either with respect to equipment previously sold or in the process of construction.

4.6.4. Fast Under Voltage Submenu

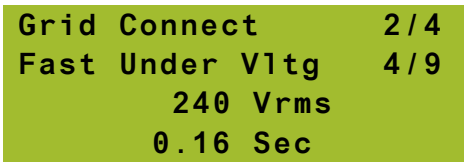

	NOTE: The Fast Under Voltage submenu is read only, and no settings can be changed using the display panel. Protective relay settings can only be changed by an Authorized Service Provider using CRMS.

The Fast Under Voltage submenu shows the transient line-to-line voltage trip point and associated delay time. The system will cease power export to the grid within 1 msec if any phase RMS voltage drops below the Fast Under Voltage setting for the set time delay. If the grid voltage re-stabilizes within 1 second of the initial under voltage, then the system will resume power output; otherwise, the system will shut down. The Fast Under Voltage value at which this sequence will be triggered is adjustable from 0 VAC up to the Under Voltage setpoint. The delay time is adjustable from 0.03 to 1.00 second in 0.01 second increments. Initial Factory Settings are 264 V line-to-line and 0.095 second delay. This setting can only be changed by a Capstone ASP using CRMS.

4.6.5. Fast Over Voltage Submenu

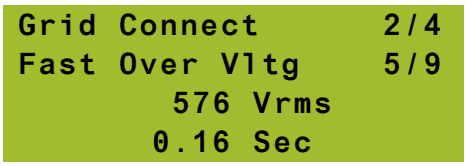

	NOTE: The Fast Over Voltage submenu is read only, and no settings can be changed using the display panel. Protective relay settings can only be changed by an Authorized Service Provider using CRMS.

The Fast Over Voltage submenu shows the transient line-to-line voltage trip point and associated delay time. The system will cease power export to the grid within 1 msec if any phase RMS voltage exceeds the Fast Over Voltage setting for the set time delay. If the grid voltage re-stabilizes within 1 second of the initial over voltage, then the system will resume power export; otherwise, the system will shut down. The Fast Over Voltage at which this sequence will be triggered is adjustable here from the Over Voltage up to 635 Volts. The delay time is adjustable from 0.03 to 1.00 second in 0.001 second increments. Initial factory settings are 600 V line-to-line and 0.032 second delay. This setting can only be changed by a Capstone ASP using CRMS.

Capstone reserves the right to change or modify, without notice, the design, specifications, and/or contents of this document without incurring any obligation either with respect to equipment previously sold or in the process of construction.

4.6.6. Under Frequency Submenu

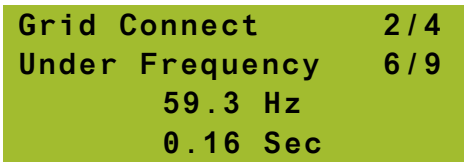

	NOTE: The Under Frequency submenu is read only, and no settings can be changed using the display panel. Protective relay settings can only be changed by an Authorized Service Provider using CRMS.

The Under Frequency submenu shows the system under frequency trip point and associated delay time. If the grid frequency falls below this under frequency trip point for the set delay time, the system will shut down. The frequency is adjustable from 45 Hz up to the Over Frequency setting, in 0.1 Hz increments. Initial Factory Setting is 59.3 Hz. For VDE compliance this setting must be 47.5 Hz.

The Under Frequency Delay is the number of seconds allowed for the Under Frequency condition before the system shuts down. This is adjustable from 0.06 to 10 seconds in 0.01 second increments. Initial Factory Setting is 0.09 second. This setting can only be changed by a Capstone ASP using CRMS.

4.6.7. Over Frequency Submenu

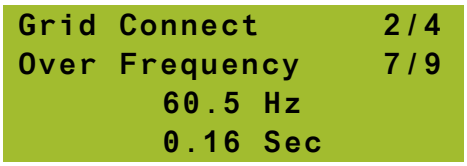

	NOTE: The Over Frequency submenu is read only, and no settings can be changed using the display panel. Protective relay settings can only be changed by an Authorized Service Provider using CRMS.

The Over Frequency submenu shows the system over frequency trip point and associated delay time. If the grid frequency exceeds this over frequency trip point for the set delay time, the system will shut down. The frequency is adjustable from the Under Frequency setting to 65, in 0.1 Hz increments. Initial Factory Setting is 60.5 Hz.

For Active Power Foldback on Over Frequency, as described in paragraph 4.6.9, the over frequency trip point is used as the maximum frequency setting for the microturbine power reduction. For VDE compliance this setting must be 51.5 Hz.

The Over Frequency Delay is the number of seconds allowed for the Over Frequency condition before the system shuts down. This is adjustable from 0.06 to 10 seconds in 0.01 second increments. Initial Factory Setting is 0.09 second. This setting can only be changed by a Capstone ASP using CRMS.

Capstone reserves the right to change or modify, without notice, the design, specifications, and/or contents of this document without incurring any obligation either with respect to equipment previously sold or in the process of construction.

4.6.8. Reconnect Delay Submenu



The Reconnect Delay submenu applies only to Dual Mode configured systems. After a transition to Stand Alone, the microturbine checks that the utility grid voltage is within the protective relay settings for this time limit before reconnecting to the grid. It is the minimum amount of time the system will operate in the Hot Standby state. In Hot Standby, the engine is on and ready to generate power in Stand Alone mode if the utility grid loses power during the delay period. The initial factory setting for Reconnect Delay is 5 minutes. The timer can be set from 5 to 30 minutes. The user must be logged in with the current password to change this setting.

4.6.9. Active Power Foldback on Over Frequency

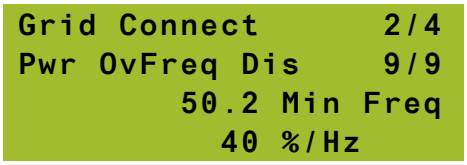

	NOTE: The user will be able to view the data on the Power Reduction at Over Frequency submenu without logging on with a password; to change any settings requires logging on with a user password.

The Active Power Foldback on Over Frequency submenu enables compliance with Verband der Elektrotechnik (VDE) requirements for low voltage systems. The settings for this function are adjustable so that the same features can be used in non-VDE applications as well. The submenu settings are as follows:

- Pwr OvFreq Ena/Dis: This setting enables or disables the Active Power Foldback on Over Frequency function.
- Min Freq: The Minimum Frequency setpoint is the grid frequency in Hz at which microturbine power reduction begins. Power reduction occurs at the rate specified by the power reduction gradient, as described below. For VDE compliance, the minimum frequency must be set to 50.2 Hz.
- %/Hz: This setting is the Power Reduction Gradient expressed as the percentage of power drop per Hz. The power reduction ramp occurs between the minimum frequency (above) and the maximum frequency. The maximum frequency is the Over Frequency setting as described in paragraph 4.6.7. For VDE compliance, the power reduction gradient must be set to 40%.

Capstone reserves the right to change or modify, without notice, the design, specifications, and/or contents of this document without incurring any obligation either with respect to equipment previously sold or in the process of construction.

4.7. Stand Alone Menu

⚠	ELECTRICAL WARNING: Protective Relay settings can only be changed by a Capstone Authorized Service Provider (ASP) using CRMS. Do not attempt to change any Grid Connect Protective Relay functions yourself. Injury to personnel and/or damage to equipment can occur.

The top-level Stand Alone menu establishes voltage and frequency output and is applicable only when the microturbine operates in Stand Alone mode. It also establishes the operational limits for voltage and frequency, and the rates at which voltage and frequency are increased to nominal on start up (Ramp Start). These limits are usually set when the microturbine is commissioned and are not changed once set. Contact your Capstone Authorized Service Provider for more data on the Stand Alone menu.

Refer to the following reference documents as required:

- Stand Alone Operation Technical Reference (410053)
- Model C30 Electrical Technical Reference (410000)

The Stand Alone submenus are described in the following paragraphs.

▶	NOTE: In the following submenus, the first line always displays the Stand Alone top level menu.

4.7.1. Voltage Submenu

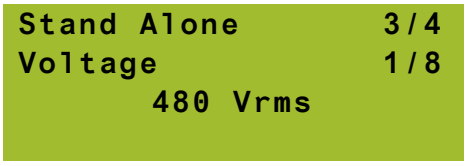

The Voltage submenu is used to set the nominal RMS output voltage (line-to-line) in Stand Alone Mode. Voltage is adjustable from 150 to 480 in 1 Volt increments. Initial Factory Setting is 480 VAC line-to-line. The user must be logged in with the current password to change this setting.

Capstone reserves the right to change or modify, without notice, the design, specifications, and/or contents of this document without incurring any obligation either with respect to equipment previously sold or in the process of construction.

4.7.2. Under Voltage Submenu

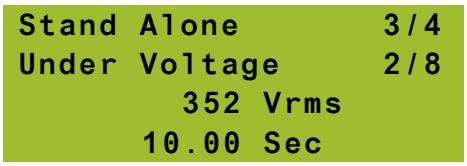

	NOTE: The Under Voltage submenu is read only, and no settings can be changed using the display panel. Protective Relay settings can only be changed by an Authorized Service Provider using CRMS.

The Under Voltage submenu shows the line-to-line voltage trip point and associated delay time. If the RMS voltage between any phases falls below this setting, the delay timer is started. If the voltage has not recovered at the end of this delay time, the system will shut down. Voltage is adjustable from 0 up to nominal. Initial Factory Setting is 352 Volts.

The Under Voltage Delay establishes the time period allowed for any phase voltage to fall below the Under Voltage limit. The delay is adjustable from 0.01 up to 10 seconds in 0.01 second increments. Initial Factory Setting is 10 seconds. This setting can only be changed by a Capstone ASP using CRMS.

4.7.3. Over Voltage Submenu

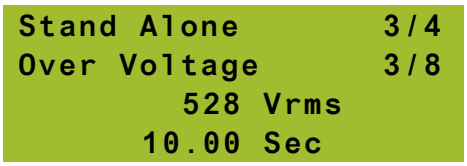

	NOTE: The Over Voltage submenu is read only, and no settings can be changed using the display panel. Protective Relay settings can only be changed by an Authorized Service Provider using CRMS.

The Over Voltage submenu shows the line-to-line voltage trip point and associated delay time.

If the RMS voltage between any phases rises above this setting the delay timer is started. If the voltage has not subsided by the end of this time span, the system will shut down. Voltage is adjustable from 528 down to nominal in 1 Volt increments. Initial Factory Setting is 528 Volts.

Over Voltage Delay establishes the time span allowed for any phase voltage to rise above the Over Voltage limit. The delay is adjustable from 0.01 to 10 seconds in 0.01 second increments. Initial Factory Setting is 10 seconds. This setting can only be changed by a Capstone ASP using CRMS.

Capstone reserves the right to change or modify, without notice, the design, specifications, and/or contents of this document without incurring any obligation either with respect to equipment previously sold or in the process of construction.

4.7.4. Frequency Submenu

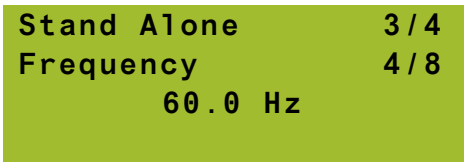

The Frequency submenu establishes the nominal output frequency. This is adjustable from 45 to 65 Hz in 1 Hz increments. Initial factory setting is 60 Hz. The user must be logged in with the current password to change this setting.

4.7.5. Under Frequency Submenu

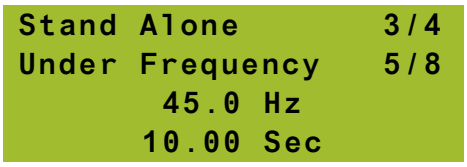

	NOTE: The Under Frequency submenu is read only, and no settings can be changed using the display panel. Protective Relay settings can only be changed by an Authorized Service Provider using CRMS.

The Under Frequency submenu shows the system under frequency trip point and associated delay time. If the output frequency falls below this under frequency trip point for the set delay time, the system will shut down. The frequency is adjustable from 45 to the nominal output frequency in 0.1 Hz increments. Initial Factory Setting is 45 Hz.

Under Frequency Delay is the time span allowed for output frequency to fall below Under Frequency (Hz) before the system will shut down. This is adjustable from 0.01 to 10 seconds in 0.01 second increments. Initial Factory Setting is 10 seconds. This setting can only be changed by a Capstone ASP using CRMS.

4.7.6. Over Frequency Submenu

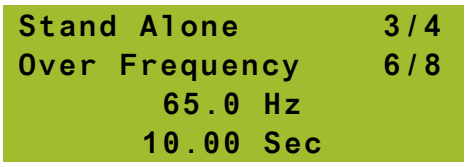

	NOTE: The Over Frequency submenu is read only, and no settings can be changed using the display panel. Protective Relay settings can only be changed by an Authorized Service Provider using CRMS.

Capstone reserves the right to change or modify, without notice, the design, specifications, and/or contents of this document without incurring any obligation either with respect to equipment previously sold or in the process of construction.

The Over Frequency submenu shows the system over frequency set point and associated delay time. If the output frequency rises above this over frequency trip point for the set delay time, the system will shut down. The frequency is adjustable from 65 Hz down to the nominal output frequency, in 0.1 Hz increments. Initial Factory Setting is 65 Hz. If the output frequency exceeds the Over Frequency setting for the time delay setting, the system will shut down. The time delay is adjustable from 0.01 to 10 seconds in 0.01 second intervals. Initial Factory Setting is 10 seconds. This setting can only be changed by a Capstone ASP using CRMS.

4.7.7. MultiPac Minimum Power Submenu

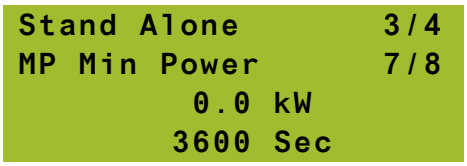

The MultiPac Minimum Power submenu sets the minimum power level that a Stand Alone MultiPac must be able to provide before it switches to load operation. The kW setting is the minimum value of total power available from the MultiPac microturbines before the master microturbine commands the microturbine(s) to go into Load State and begins outputting power. This setting ensures that the system has enough power generating capability before power is allowed to be exported to the load and should be set to the maximum expected load. Initial Factory Setting is 0 kW.

The timeout period setting establishes the maximum time the MultiPac has to achieve the minimum power setting before the system shuts down automatically. This timeout setting is adjustable from 60 to 3600 seconds in 1 second intervals. Initial Factory Setting is 60 seconds.

Refer to the MultiPac Operation Technical Reference (410054) as required. The user must be logged in with the current password to change these settings.

4.7.8. Local Battery Charge Submenu

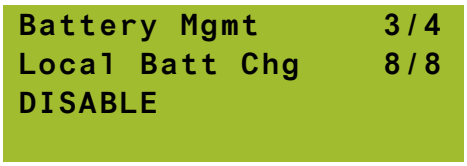

The Local Battery Charge <DISABLE/ENABLE> submenu is applicable to a microturbine that is not a MultiPac master. This submenu enables or disables a battery recharge when the microturbine is in Grid Connect mode Standby state, or in the Stand Alone mode Load state. The user must be logged in with the current password to change this setting.

Capstone reserves the right to change or modify, without notice, the design, specifications, and/or contents of this document without incurring any obligation either with respect to equipment previously sold or in the process of construction.

4.8. Unit Data Menu

The user will be able to view the data on the various screens of the Unit Data Menu without needing to log on with a password, except when the maintenance password is required as noted in Table 1. The top-level Unit Data menu displays real-time data for each microturbine in a MultiPac system. The second line displays the unit number (1 thru 20), and the third and fourth lines displays data for that specific unit.

Data can be accessed from the master microturbine unit in a MultiPac system or from an individual microturbine using the display panel.

The Display Panel submenus related to Unit Data menu are listed in Table 1.



NOTE: In the following submenus, the first line always displays the Unit Data top level menu, and the second line displays the unit number.

Table 1. Unit Data Submenus

Submenu	Line 3	Line 4	Description
1/16	System State	Fault Status	System state and fault status.
2/16	kW	Demand	Actual kW output and commanded power level.
3/16	Power Factor	kVA	Actual power factor and kVA output.
4/16	Power Over Frequency Delta		Amount that power output is reduced during power foldback at over frequency.
5/16	Frequency	Voltage A	Output frequency and phase A voltage.
6/16	Voltage B	Voltage C	Phase B and phase C voltages.
7/16	Current A	Current B	Phase A and phase B currents.
8/16	Current C		Phase C current.
9/16	TET	RPM	Turbine Exit Temperature (°C or °F) and engine speed (RPM).
10/16	Fuel Pressure	Fuel %	Fuel pressure and fuel percentage.
11/16	Battery Voltage	Battery Current	Voltage and current of the battery pack.
12/16	Battery SOC	Last EQ Charge	Battery State of Charge percentage and last equalization charge time for battery.
13/16	Temperature	Ambient Pressure	Ambient temperature (°C or °F) and ambient pressure (psia or kPa).
14/16	Inverter Temp	Generator Temp	Inverter and generator temperatures.

Capstone reserves the right to change or modify, without notice, the design, specifications, and/or contents of this document without incurring any obligation either with respect to equipment previously sold or in the process of construction.

Table 1. Unit Data Submenus (Continued)

Submenu	Line 3	Line 4	Description
15/16	C30 Main Code Version		C30 main CPU software version
16/16	Hours	Starts	Running time in hours and number of starts.

Below is an example showing the kW Output and kW Demand (Dmd) submenu.

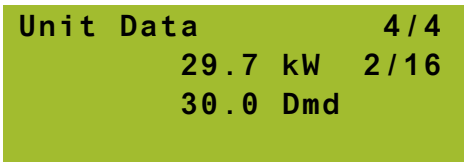

Capstone reserves the right to change or modify, without notice, the design, specifications, and/or contents of this document without incurring any obligation either with respect to equipment previously sold or in the process of construction.

5. Microturbine Preventive Maintenance

This section details the preventive maintenance procedures that must be performed on the Capstone Microturbine.

	ELECTRICAL WARNING: The microturbine system generates and uses voltage levels that can injure or kill. Obey all safety precautions when you work with or around electrical equipment.

	NOTE: Failure to provide proper maintenance will void the microturbine warranty. Users do not perform the following microturbine maintenance procedures, but it is important for users to be aware of them.

Only Capstone Authorized Service Providers can access the inside of the microturbine enclosure (except for accessing the User Connection Board in the UCB/JUCB).

Only Capstone Authorized Service Providers can perform maintenance on the microturbine components.

5.1. Scheduled Maintenance

Preventive maintenance of the C30 microturbine includes performing scheduled maintenance of its components at regular intervals. The list of maintenance schedules for C30 components is contained in the Microturbine Standard Maintenance Schedule Work Instructions (440000). This document is available from your Authorized Service Provider for reference. Only Authorized Service Providers are permitted to access microturbine components and perform these maintenance tasks.

5.2. Preventive Maintenance

Preventive maintenance activities for the microturbine electronics and engine filter, external fuel filter, and for the battery pack are described in the following paragraphs.

5.2.1. Microturbine Inlet Air Filter

	CAUTION: The microturbine requires clean, dust free air for operation. Do not operate the microturbine without the inlet air filter in place or damage to the equipment can occur.

The engine air inlet filter should be inspected periodically to ensure unrestricted flow of clean combustion and cooling air to the generator and turbine engine. The recommended interval for this inspection is every 4,000 hours of operation or annually, based on clean environment operation.

Outdoor operation, especially in areas subject to wind and airborne dirt or dust, will require a significant reduction in this interval. If the microturbine is operated under unusual conditions, the filters should be checked more frequently to determine a site-specific service interval. Filters may require more frequent attention based upon environment, installation, and/or air quality.

Capstone reserves the right to change or modify, without notice, the design, specifications, and/or contents of this document without incurring any obligation either with respect to equipment previously sold or in the process of construction.

If specifically permitted by the Capstone Authorized Service Provider, the end user can replace the inlet air filter element. The Capstone Authorized Service Provider will provide instruction and oversight.

5.2.2. External Fuel Filter

⚠	WARNING: Microturbine fuel is flammable and explosive. An explosion can cause death or injury to personnel and/or damage to equipment. No open flame or smoking is allowed near the microturbine.

The optional external fuel filter element should be replaced periodically to ensure unrestricted flow of clean fuel to the microturbine. This is necessary for microturbine optimal performance. The recommended interval for this replacement is every 8,000 hours of operation. The service interval is based on typical clean fuel supplies found in the United States. Filters may require more frequent attention based upon environment, installation, and/or fuel quality.

If specifically permitted by the Capstone Authorized Service Provider, the end user can replace the external fuel filter element. The Capstone Authorized Service Provider will provide instruction and oversight.

5.2.3. Battery Maintenance During Storage

The battery pack is a lead acid type and completely sealed. The battery pack should be fully charged prior to storage and charged again prior to being put back into service. If the microturbine is equipped with a battery, it includes a battery isolation switch.

Microturbines equipped with the Stand Alone option require maintenance for the battery pack. The battery pack is maintained through software during regular use, however battery packs stored for extended periods will become discharged and require service. Recharge intervals for battery packs in storage with the battery breaker **OPEN** are dependent upon the ambient storage temperatures.

The isolation switch should be set to OFF if the microturbine is to be serviced or transported, or if the microturbine will not be operated for a period of greater than two weeks. See Figure 4 for a view of the isolation switch.

The maximum recharge interval is specified in Table 2.

⚠	CAUTION: The recharge intervals shown in the following table also apply to the Model C30 UCB battery stored unplugged from the UCB Board.

Table 2. Maximum Recharge Intervals

Storage Temperature °C (°F)	Recharge Interval - Days
<20 °C (68 °F)	180
20 °C (68 °F) to 30 °C (86 °F)	90
30 °C (86 °F) to 40 °C (104 °F)	45
40 °C (104 °F) to 50 °C (122 °F)	20
50 °C (122 °F) to 60 °C (140 °F)	5

Capstone reserves the right to change or modify, without notice, the design, specifications, and/or contents of this document without incurring any obligation either with respect to equipment previously sold or in the process of construction.

	NOTE: The maximum recommended storage temperature for a battery pack is 40 °C (104 °F). Long-term storage above this temperature may impact battery pack life.

	NOTE: Capstone does not recommend storage over six months without charging or one year with charging, as it may contribute to a shortened battery life in the field.

5.2.3.1 Sleep Mode

During the Sleep mode, the battery pack should be at a higher state of charge since it is called upon to start the microturbine and produce transient power immediately after start-up. This reduces the recharge intervals for Sleep state. Recharge intervals for battery packs in Sleep mode are dependent upon the ambient temperatures as specified in the following table:

	NOTE: The recharge intervals in the following table do not apply to the Model C30 UCB battery.

Table 3. Maximum Recharge Intervals in Sleep Mode

Ambient Temperature °C (°F)	Recharge Interval - Days
<20 °C (68 °F)	15
20 °C (68 °F) to 30 °C (86 °F)	15
30 °C (86 °F) to 40 °C (104 °F)	8
40 °C (104 °F) to 50 °C (122 °F)	4
50 °C (122 °F) to 60 °C (140 °F)	2

	NOTE: A Grid Connect Idle Recharge or the Capstone External Battery Charger option may be used to perform the recharge as required. The battery voltage must be greater than 180 VDC on the C30 to perform a Grid Connect Idle Recharge.

When the recommended recharge interval is reached, the battery pack voltage should be recorded, and the battery packs must be recharged. If the microturbine cannot be operated, the optional Capstone External Battery Charger may be used to recharge the battery pack. Contact your Capstone Authorized Service Provider for details on the Capstone External Battery Charger.

5.2.4. Battery Charge Management

The microturbine system is designed to keep the battery approximately 80% charged during operation. This allows for sourcing and sinking of power transients in Stand Alone Mode. After an OFF command the system will recharge the battery to 90% before shutting down. This recharge can take up to 20 minutes.

Capstone reserves the right to change or modify, without notice, the design, specifications, and/or contents of this document without incurring any obligation either with respect to equipment previously sold or in the process of construction.

During normal use, battery cells become charged unequally. Periodically, the microturbine will perform an equalization charge cycle to keep the battery in top condition. Allowable times (in 4-hour minimum windows) must be programmed for when this can occur. Use the CRMS to set these allowable time windows, or contact your Capstone Authorized Service Provider for proper setup.

5.2.4.1 Manual Battery Pack Equalization Charge

If the system is not operating or is in storage, a manual equalization charge may be commanded if the system is connected to the electric utility grid (refer to Grid Connect Operation on page 23). Initiate a Battery Pack Equalization charge as follows:

Using Display Panel:

1. System Data Menu > Enter Password. The factory default User level password is 87712370.
2. Navigate to Stand Alone > Local Batt Chg > Enable. Press Accept.

Using CRMS or APS – CRMS:

1. Select Settings > Battery Management. Set Equalization Charge Slider to Enable.

	NOTE: A battery pack equalization charge can take up to 4 hours.

5.2.5. Warranty

Each microturbine ships with a standard warranty. Extended warranties are available. Contact your Authorized Service Provider for details on Capstone warranty terms and conditions.

6. Troubleshooting

This section details basic troubleshooting procedures and steps that the user can perform on the Capstone Microturbine without accessing the inside of the enclosure. Only Capstone Authorized Service Providers are permitted access to the inside of the enclosure.

	ELECTRICAL WARNING: The microturbine system produces and contains high voltage. High voltage can injure or kill. Obey all safety procedures when you work around electrical equipment. Only Capstone Authorized Service Providers are permitted access to the inside of the enclosure.

6.1. Incidents

The microturbine continuously monitors a wide variety of parameters both internal and external to the system. An incident occurs whenever a measured parameter falls outside prescribed limits. Incidents include (but are not limited to) low fuel pressure, utility interruptions, and utility over voltages.

Capstone reserves the right to change or modify, without notice, the design, specifications, and/or contents of this document without incurring any obligation either with respect to equipment previously sold or in the process of construction.

6.2. Incident System Severity Levels

When the system detects an incident, it may take one of several actions, depending on the system severity level (SSL). Actions range from simply noting the occurrence and continuing to operate, to immediate shutdown of the system. The action taken depends upon the severity of the incident. The system will attempt a restart only if the severity of the incident will allow it.

Depending on the parameter and the magnitude of the incident, the event is classified as either a warning or a fault.

A warning incident is a condition that is outside normal operating parameters, but which does not require a system shut down.

A fault incident is a condition under which the system shuts down to prevent possible damage to the microturbine or unsafe operating conditions.

6.3. Incident Display Format

When an incident occurs, the display panel or hazardous location controller displays a fault description (e.g., **GC INTERLOCK**) and the fault code (e.g., **7002**). This incident message appears on line three of the System State Fault Status submenu of the Unit Data menu (refer to page 52). Refer to the C30/C65 Offshore and Hazardous Location Application Guide (480010) for a description of the incident display on the hazardous location controller.

The fault code is a number up to five digits in length that, along with the fault code description, helps the Capstone Authorized Service Provider determine the cause of the incident.

6.4. Incident Records

When an incident occurs the system records a snapshot of conditions at that time, called an Incident Record. Several incidents can occur in quick sequence, and the microturbine will continue to operate or shut down depending on the severity of the incident(s).

The Incident Record can only be accessed by an Authorized Service Provider, using CRMS. The Incident Record contains the incident name, incident code number, date and time of the incident, and conditions of the turbine at the time of the incident. Some examples of the data contained in the incident record are as follows:

- Cumulative number of starts
- Output power
- Engine speed
- Turbine exit temperature
- Fuel device command
- Ambient temperature
- Voltage and current on each phase

Capstone reserves the right to change or modify, without notice, the design, specifications, and/or contents of this document without incurring any obligation either with respect to equipment previously sold or in the process of construction.

- Frequency
- DC bus and power supply voltage
- Several internal system temperatures

6.5. Isolation Messages

The Incident Record also contains an Isolation Message that describes the type of incident and if it is a Warning or a Fault. The Isolation Messages are listed below and described in the following paragraphs.

- Internal Warning or Fault
- Fuel Warning or Fault
- Grid Warning or Fault
- Lo-Temp Warning or Fault
- Hi-Temp Warning or Fault
- Hi-Alt Warning
- E-Stop Fault
- User Connection Fault

6.5.1. Internal

An Internal Incident is one that is within a major subsystem of the microturbine and is not recoverable by the user. In the case of an Internal Fault, the user should reboot the system. If unsuccessful in restoring normal operation, a Capstone Authorized Service Provider will be required to initiate repair of the microturbine.

6.5.2. Fuel

The user should initially check the fuel supply to the microturbine. Verify that the shut off valve is open. Ensure the line has the correct fuel pressure. Check the optional external filter to ensure that it is not blocked. If the problem persists, call your Capstone Authorized Service Provider.

6.5.3. Grid

This incident is likely to be due to an electric utility grid disturbance. Check all breakers and fuses to ensure they are not tripped before troubleshooting. Reboot the system and attempt a start. If the problem persists, call your Capstone Authorized Service Provider.

6.5.4. Lo-Temp/Hi-Temp/Hi-Alt

Generally, these incidents are due to ambient conditions that are outside the design envelope of the microturbine. Possible solutions would be to adjust the room temperature, ensure that adequate ventilation is provided, and verify that the air input and exhaust are not obstructed. Continued operation under these conditions may affect operation and cause damage to the microturbine.

Capstone reserves the right to change or modify, without notice, the design, specifications, and/or contents of this document without incurring any obligation either with respect to equipment previously sold or in the process of construction.

6.5.5. E-Stop

If the event display reads MANUAL E-STOP, fix the original problem that initiated the E-Stop, as this fault must be cleared before it is safe to resume operation. Next, check the optional emergency stop button and verify that it has been activated. If it has, reset the button, cycle power off to the microturbine for 30 seconds, and turn the power back on. The fault should clear, and the system should resume operation. If it does not, call your Capstone Authorized Service Provider.

6.5.6. User Conn (User Connection)

User Connection incidents can be due to incorrect Grid Connect / Stand Alone settings, mode transition faults when in Dual Mode operation, or to indicate a possible problem with external equipment connected to the microturbine.

6.6. Basic Troubleshooting Procedures

Basic Troubleshooting procedures are presented in the following paragraphs.

⚠	WARNING: Users do not perform some of the following microturbine troubleshooting procedures, but it is important for users to be aware of them. Only Capstone Authorized Service Providers are permitted access to the inside of the enclosure. Users are permitted to open the User Connection Bay to access the user port.

6.6.1. Troubleshooting Procedures for Standard C30 Model

6.6.1.1 No Lights on Display Panel

If no lights are present on the Display Panel, troubleshoot as follows:

⚠	WARNING: Only Capstone Authorized Service Providers can perform the following troubleshooting steps.

1. If Stand Alone equipped, open the front door. Make sure the Battery Isolation switch is set to ON. Then press the BATT START button on the Display Panel.
2. If Grid Connect, verify electric utility grid voltage is present on the phase terminals in the Power Bay.

6.6.1.2 No Attempt to Start after ON Command

If no attempt is made to Start, after an ON Command, troubleshoot as follows:

1. Verify that the current communication device (Display Panel or user port) is the control device. Refer to Control Device Authority and Priority on page 22.
2. Verify that the ON command is consistent with the currently active dispatch mode. Refer to the section on Display Panel Menus for more data.

Capstone reserves the right to change or modify, without notice, the design, specifications, and/or contents of this document without incurring any obligation either with respect to equipment previously sold or in the process of construction.

6.6.1.3 Start Attempt Fails

If a Start Attempt fails, troubleshoot as follows:

1. If the system attempts but fails to start, an incident code will be registered as described in the previous sections.
2. The troubleshooting procedure is the same as for Unexpected Shut Down or Warning in the next section.

6.6.1.4 Low Power Output

If Low Power Output is perceived, troubleshoot as follows:

1. Check your inlet fuel supply. Verify that the fuel isolation valve is open, and that the inlet fuel line has the correct fuel pressure.
2. Check your external fuel filter. Verify that the external fuel filter (if installed) is not blocked.
3. Check your inlet airflow, ventilation, and exhaust airflow. Verify that the inlet airflow and the exhaust airflow are not obstructed.
4. Check your ambient operating conditions and verify the expected power output due to temperature, altitude and other derating factors. Verify that ambient conditions are not outside the microturbine design envelope.

6.6.1.5 Unexpected Shut Down or Warning

When a warning incident occurs, no action is required by the user. When a fault incident occurs, the troubleshooting steps are as follows:

1. Attempt to restart. If unsuccessful, then verify the fuel, air, and electrical supply to the microturbine.
2. Attempt to restart. If unsuccessful, then enter the user password and reboot the system through the Display Panel.
3. Attempt to restart. If unsuccessful, then cycle the power by shutting off power to the system, waiting 30 seconds, and turning the power back on.
4. Attempt to restart. If unsuccessful, then note the event number listed on the Display Window, and then call your Capstone Authorized Service Provider for assistance.

When required, your Capstone Authorized Service Provider will determine whether the event noted requires a service call or if the user can perform fault correction on site. Generally, the Service Provider will initiate a service call for Internal Fault codes. In most other cases, the Service Provider will recommend a possible course of action to return the microturbine to operational status.

6.6.2. Troubleshooting Procedures for C30 Hazardous Location Model

Refer to the C30/C65 Offshore and Hazardous Location Application Guide (480010) for troubleshooting procedures that apply to the hazardous location microturbine.

Capstone reserves the right to change or modify, without notice, the design, specifications, and/or contents of this document without incurring any obligation either with respect to equipment previously sold or in the process of construction.

Notes

Capstone reserves the right to change or modify, without notice, the design, specifications, and/or contents of this document without incurring any obligation either with respect to equipment previously sold or in the process of construction.

7. Product Support

Capstone Turbine Corporation is dedicated to the concept of quality to the owners and users of every microturbine. Your microturbine should operate without trouble. If you require maintenance support or other technical assistance, please contact your Capstone Authorized Service Provider.

Capstone Technical Support can assist you by providing contact data for your Capstone Authorized Service Provider.

Fill in this record with information about your Capstone Authorized Service Provider to allow easier access.

Capstone Authorized Service Provider Contact Information	
ASP Contact Name	
Address	
Telephone	
Facsimile	
E-mail	

The following information will help your Authorized Service Provider assist you.

System Information	
Microturbine Model No.	
System Serial No.	
Fuel Type	
Modem Phone No.	
Options Installed, and any configuration data	

Capstone reserves the right to change or modify, without notice, the design, specifications, and/or contents of this document without incurring any obligation either with respect to equipment previously sold or in the process of construction.

Maintenance Log

Event	Date	Hours	Starts
Commissioning			

Capstone reserves the right to change or modify, without notice, the design, specifications, and/or contents of this document without incurring any obligation either with respect to equipment previously sold or in the process of construction.

Multiaqua™



MACH-060-1
Heat Pump Air-Cooled Chiller

Heat Pump Air-Cooled Chillers for Global Residential
and Light Commercial Microclimates

MACH NOMENCLATURE BREAKDOWN

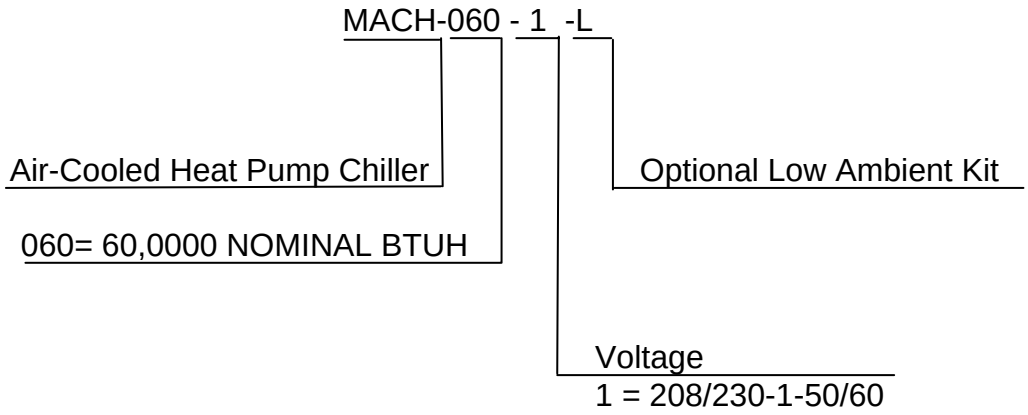

Available Model Numbers
MACH-060-1 MACH-060-1-L

HVAC Guide Specifications
Heat Pump Air Cooled Liquid Chiller

Size Range:
5 Tons Nominal

Multiaqua Model Number:
MACH-060-1

Part 1 — General

1.01 SYSTEM DESCRIPTION

Multiaqua air cooled liquid heat pump chiller are designed using a scroll compressor, low sound condenser fans and a high efficiency pump.

1.02 QUALITY ASSURANCE

A. Unit shall be certified in accordance with U.L. Standard 95, latest revision (U.S.A)
B. Construction shall comply with ASHRAE 15 Safety Code, NEC and ASME applicable codes (U.S.A. codes)
C. Manufactured in a facility registered to ISO 9002, Manufacturing Quality Standard.
D. ETL Certified.
E. Fully load run tested at the factory.
F. Damage resistant packaging.

1.03 DELIVERY, STORAGE AND HANDLING

A. Packaged and readied for shipment from the factory.
B. Unit controls shall be capable of withstanding 150F storage temperatures in the control compartment.
C. Stored and handled per unit manufacturer's recommendations.

1.04 WARRANTY

A. Complete unit, first year parts only warranty against manufacturer's defects.
B. Compressor, years 2-5, parts only warranty against manufacturer's defects.

Part 2 — Products

2.01 EQUIPMENT

A. General:
   1. Factory-assembled, air cooled heat pump chiller.
   2. Shall be assembled on heavy gauge steel mounting/lifting rails.
   3. Contained within the unit cabinet shall be all factory wiring, piping controls, refrigerant charge (R-407c), and special requirements prior to field start-up.
   4. Brass body strainer with 20 mesh screen and blow down shall be supplied in cabinet as a field installable accessory.

B. Unit Cabinet:
   1. Cabinet shall be galvanized steel casing with a baked polyester powder finish.
   2. Cabinet shall be capable of withstanding 500-hour salt spray test in accordance with the ASTM (U.S.A) standard.

C. Condenser Fans:
   1. 4-blade, condenser fans shall be direct-driven, aluminum construction, and shall be statically and dynamically balanced with inherent corrosion protection.
   2. Air shall be discharged horizontally.
   3. Motors and fans shall be protected by coated steel wire safety guards.

D. Fan Motors:
   1. Condenser fan motors shall be single speed, direct drive.
   2. Totally enclosed.
   3. Permanently lubricated sleeve bearings and Class F insulation.
   4. Internal overload protection.

E. Compressors:
   1. Fully hermetic scroll type compressor.
   2. Direct Drive, 3500 rpm (50/60 Hz)
   3. Compressor shall be suction gas cooled.
   4. Internal motor protected.
   5. Protected by high pressure and loss of charge devices.
   6. External vibration isolation.

F. Pump:
1. Circulating pump shall be stainless steel with high efficiency enclosed motor.
2. Unit shall have chilled liquid solution piping to the exterior of the cabinet.
3. Shall be capable of a max liquid solution pressure of 60 psig.

G. Evaporator:
1. Evaporator shall have one independent refrigeration circuit and one liquid solution circuit.
2. Rated for a refrigerant side working pressure of 450 psig and shall be tested for a maximum fluid-side pressure of 150 psig.
2. Single pass, ANSI type 316 stainless steel, brazed plate construction.
4. Insulated with closed cell, elastometric foam (ASTM 518)

H. Condenser:
1. Shall be air cooled with integral sub-cooler.
2. One independent refrigeration circuit.
3. Constructed of rifled copper tubing mechanically bonded to aluminum fins.
3. Tubes shall be cleaned, dehydrated and sealed.
4. Assembled condenser coils shall be leak tested and pressure tested at 450 psig.

I. Refrigeration Components:
1. Refrigeration circuit components shall include sight glass, reversing valve, thermal expansion device, and complete operating charge of both refrigerant (R-407c) and compressor POE oil.

PART 3-Controls and Safties

3.01 Controls

A. Controls:

Unit control shall include the following minimum components.
1. Control transformer to serve all controllers, relays and control components.
2. Pump bypass timer
3. Compressor recycle timer.
4. Optional fan cycling control for low ambient operation.
5. Flow switch.
6. Defrost printed circuit board and thermostat.
7. Leaving water temperature thermostat with thermistors installed to measure cooler leaving water flow.
8. Manual heat/cool changeover switch.

B. Unit controls shall include the following functions.
1. Capacity control based on leaving chilled fluid temperature. Temperature setpoint accuracy of +/- 1.0F.
2. Liquid solution pump start/stop control.

3.02 Safeties:

A. Unit shall be equipped with thermistors and all necessary components in conjunction with the control system to provide the unit with the following protectants:
1. High refrigerant pressure.
2. Low liquid solution flow.
3. Thermal overload.
4. Short cycling.

PART 4 Operating Characteristics:

4.01 Temperatures

A. Unit shall be capable of starting and running in cooling mode at outdoor ambient temperatures from 55°F to 120°F.

B. Optional Low Ambient Kit shall allow starting and running at outdoor temperatures to – 20°F. A field supplied and installed crankcase heater must be used when operating at these temperatures.

C. Unit shall be capable of starting and running in heating mode at outdoor ambient temperatures from 70°F to 17°F.

D. Unit shall be capable of starting up in cooling with a maximum 80°F and a sustained 70°F entering liquid solution temperature to the evaporator.

E. Unit shall be capable of starting up in heating with a minimum 55°F liquid solution temperature.

F. Minimum 10% Propylene Glycol solution is required. For outdoor temperatures below 32°, reference MAC Glycol Solution Data Table.

4.02 Electrical Requirements

A. Primary electrical power supply shall enter the unit at a single point.
B. Electrical power supply shall be rated to withstand 120°F operating ambient temperature.
C. Unit shall be available in 208/230-01-50/60.
D. Control points shall be accessed through a terminal block.

MACH-060-1 Product Specifications

Physical Data										
Model Number	Coil				Chiller				Weight (lbs)	
	Height (in)	Length (in)	Copper Diameter (in)	Coil Rows	Height (in)	Length (in)	Width (in)	Refrigerant R407c	Net	Shipping
MACH-060-1	38	48	3/8	2	49.50	39.50	16.25	92.95 oz	313	316

Electrical Data									
Model Number	Volts/ Phase/ Hertz	Compressor		Condenser Fan Motor (2 qty)		Pump Motor		Fuse or HACR Circuit Breaker Per Circuit	
		(RLA)	(LRA)	(FLA)	(RPM)	(FLA)	(RPM)	Minimum Amps	Maximum Amps
MACH-060-1	208/230-1-50/60	32.1	169	1.05	1050	3.70	3450	45.93	70

	MACH-060-1
Compressor	Copeland Scroll
Refrigerant	R407c
Heat Exchanger	Brazed Plate
Max. Pump Head Pressure	50 ft.
Max Flow Rate	14.4 gpm
Min Flow Rate	9.0 gpm
Supply Water Temp	44°
Return Water Temp	54°
Min. Solution Content	25 Gallons
Expansion Tank Size	2 Gallons
Pump	0.5 HP
Water Connections	1" S & 1.25" R
Internal Pressure loss	1.85 ft of head

Copper Wire Size (1% Voltage Drop)									
Supply Wire Length in Feet	200	6	4	4	4	3	3	2	2
	150	8	6	6	4	4	4	3	3
	100	10	8	8	6	6	6	4	4
	50	14	12	10	10	8	8	6	6
		15	20	25	30	35	40	45	50
		Supply Circuit Ampacity							

Multiaqua chillers are designed to operate exclusively with R407c refrigerant in a self-contained, pre-charged refrigerant system. Do not access the closed refrigerant circuit for any reason other than after-sale, after installation component replacement. Routine maintenance and service is to be performed by qualified personnel only.

These specifications are subject to change without notice.

MACH-060-1 Product Specifications

MACH-060-1 Capacity / Watts / EER									
	MACH-060-1 COOLING					MACH-060-1 HEATING			
O/A Temp (°F)	Tons	KW	EER	COP	O/A Temp (°F)	Tons	KW	EER	COP
82	5.1	5.3	11.55	3.38	17	3.19	4.6	8.32	2.44
95	4.9	5.9	9.97	2.92	35	3.68	4.7	9.40	2.80
100	4.8	6.1	9.44	2.76	45	4.25	4.8	10.63	3.11
105	4.7	6.4	8.81	2.58	55	4.79	4.8	11.98	3.51
110	4.7	6.5	8.68	2.54	65	5.32	4.9	13.03	3.82

Notes: Cooling is based on 44°F leaving water temperature. Heating is based on 115°F leaving water temperature

Glycol Solution Data				
Propylene Glycol %	Water Flow	Capacity	Min. Ambient Temp	GPM Adjustment= 100% Capacity
10%	x 1.020	x 0.99	26°F	x 1.01
20%	x 1.028	x 0.98	18°F	x 1.03
30%	x 1.036	x 0.98	8°F	x 1.07
40%	x 1.048	x 0.97	-7°F	x 1.11
50%	x 1.057	x 0.96	-29°F	x 1.16

Example: 30% glycol solution.
Maximum Flow Rate = 12gpm x 1.036
System capacity x .98
Use Propylene Glycol Only

Important

If the outside temperature is expected to fall below freezing (32°F) in the area the Multiaqua chiller is to be installed; the installer must take the following precautions. Failure to do so will void the warranty.

To not engage in cold ambient mitigation will result in the failure of components such as the heat exchanger, piping, circulating pump, etc… and or property damage.

• Keep the liquid solution at a minimum of ten percent propylene glycol even in areas where there is no danger of freezing.
• The percentage amount of glycol recommended is dependent on the expected ambient temperatures and the solution makeup recommendation of the glycol manufacturer. Refer to the Glycol Solution Data table above.
• Ensure the system circulating pump is in a constant energized mode to keep a continuous circulation of liquid solution.

The Multiaqua chiller is a self-contained air-cooled condenser, coupled with an insulated brazed plate heat exchanger (evaporator). The system utilizes a scroll compressor to circulate refrigerant between the condenser and heat exchanger. The refrigerant is metered into the heat exchanger with a thermostatic expansion valve. Protecting the system are high and low pressure switches as well as a pump flow switch.

Liquid solution (water and propylene glycol; minimum 10 % is required) is circulated through the heat exchanger by an externally mounted pump. The liquid solution flows through the heat exchanger to the system supply piping and on to the air handlers.

Low ambient kits are available for operating ambient temperatures down to -20 degrees Fahrenheit. The low ambient kit consists of a pressure activated fan control.

These specifications are subject to change without notice.

MACH-060-1 Cooling Performance Data

MACH-060-1 CAPACITIES with 0% Glycol										
LWT (°F)	ENTERING AIR TEMPERATURE (°F)									
	82		95		100		105		110	
	TONS	GPM	TONS	GPM	TONS	GPM	TONS	GPM	TONS	GPM
35	3.90	12.0	3.70	12.0	3.60	12.0	3.50	12.0	3.50	12.0
40	4.50		4.30		4.20		4.10		4.10	
42	4.80		4.60		4.50		4.30		4.40	
44	5.10		4.90		4.80		4.70		4.70	
45	5.30		5.10		5.00		4.80		4.80	
46	5.40		5.20		5.10		5.00		5.00	
48	5.80		5.60		5.40		5.30		5.30	
50	6.10		5.90		5.70		5.60		5.60	
55	7.00		6.70		6.40		6.30		6.20	
60	7.80		7.50		7.30		7.10		7.00	

MACH-060-1 CAPACITIES with 10% Glycol										
LWT (°F)	ENTERING AIR TEMPERATURE (°F)									
	82		95		100		105		110	
	TONS	GPM	TONS	GPM	TONS	GPM	TONS	GPM	TONS	GPM
35	3.86	12.0	3.66	12.0	3.56	12.0	3.47	12.0	3.47	12.0
40	4.46		4.26		4.16		4.06		4.06	
42	4.75		4.55		4.46		4.26		4.36	
44	5.05		4.85		4.75		4.65		4.65	
45	5.25		5.05		4.95		4.75		4.75	
46	5.35		5.15		5.05		4.95		4.95	
48	5.74		5.54		5.35		5.25		5.25	
50	6.04		5.84		5.64		5.54		5.54	
55	6.93		6.63		6.34		6.24		6.14	
60	7.72		7.43		7.23		7.03		6.93	

MACH-060-1 CAPACITIES with 20% Glycol										
LWT (°F)	ENTERING AIR TEMPERATURE (°F)									
	82		95		100		105		110	
	TONS	GPM	TONS	GPM	TONS	GPM	TONS	GPM	TONS	GPM
35	3.82	12.0	3.63	12.0	3.53	12.0	3.43	12.0	3.43	12.0
40	4.41		4.21		4.12		4.02		4.02	
42	4.70		4.51		4.41		4.21		4.31	
44	5.00		4.80		4.70		4.61		4.61	
45	5.19		5.00		4.90		4.70		4.70	
46	5.29		5.10		5.00		4.90		4.90	
48	5.68		5.49		5.29		5.19		5.19	
50	5.98		5.78		5.59		5.49		5.49	
55	6.86		6.57		6.27		6.17		6.08	
60	7.64		7.35		7.15		6.96		6.86	

These specifications are subject to change without notice.

MACH-060-1 Cooling Performance Data

MACH-060-1 CAPACITIES with 30% Glycol										
LWT (°F)	ENTERING AIR TEMPERATURE (°F)									
	82		95		100		105		110	
	TONS	GPM	TONS	GPM	TONS	GPM	TONS	GPM	TONS	GPM
35	3.82	12.0	3.63	12.0	3.53	12.0	3.43	12.0	3.43	12.0
40	4.41		4.21		4.12		4.02		4.02	
42	4.70		4.51		4.41		4.21		4.31	
44	5.00		4.80		4.70		4.61		4.61	
45	5.19		5.00		4.90		4.70		4.70	
46	5.29		5.10		5.00		4.90		4.90	
48	5.68		5.49		5.29		5.19		5.19	
50	5.98		5.78		5.59		5.49		5.49	
55	6.86		6.57		6.27		6.17		6.08	
60	7.64		7.35		7.15		6.96		6.86	

MACH-060-1 CAPACITIES with 40% Glycol										
LWT (°F)	ENTERING AIR TEMPERATURE (°F)									
	82		95		100		105		110	
	TONS	GPM	TONS	GPM	TONS	GPM	TONS	GPM	TONS	GPM
35	3.78	12.0	3.59	12.0	3.49	12.0	3.40	12.0	3.40	12.0
40	4.37		4.17		4.07		3.98		3.98	
42	4.66		4.46		4.37		4.17		4.27	
44	4.95		4.75		4.66		4.56		4.56	
45	5.14		4.95		4.85		4.66		4.66	
46	5.24		5.04		4.95		4.85		4.85	
48	5.63		5.43		5.24		5.14		5.14	
50	5.92		5.72		5.53		5.43		5.43	
55	6.79		6.50		6.21		6.11		6.01	
60	7.57		7.28		7.08		6.89		6.79	

MACH-060-1 CAPACITIES with 50% Glycol										
LWT (°F)	ENTERING AIR TEMPERATURE (°F)									
	82		95		100		105		110	
	TONS	GPM	TONS	GPM	TONS	GPM	TONS	GPM	TONS	GPM
35	3.74	12.0	3.55	12.0	3.46	12.0	3.36	12.0	3.36	12.0
40	4.32		4.13		4.03		3.94		3.94	
42	4.61		4.42		4.32		4.13		4.22	
44	4.90		4.70		4.61		4.51		4.51	
45	5.09		4.90		4.80		4.61		4.61	
46	5.18		4.99		4.90		4.80		4.80	
48	5.57		5.38		5.18		5.09		5.09	
50	5.86		5.66		5.47		5.38		5.38	
55	6.72		6.43		6.14		6.05		5.95	
60	7.49		7.20		7.01		6.82		6.72	

These specifications are subject to change without notice.

MACH-060-1 Heating Performance Data

MACH-060-1 CAPACITIES with 0% Glycol										
LWT (°F)	ENTERING AIR TEMPERATURE (°F)									
	17		35		45		55		65	
	TONS	GPM	TONS	GPM	TONS	GPM	TONS	GPM	TONS	GPM
115	3.19	12	3.68	12	4.25	12	4.79	12	5.32	12

MACH-060-1 CAPACITIES with 10% Glycol										
LWT (°F)	ENTERING AIR TEMPERATURE (°F)									
	17		35		45		55		65	
	TONS	GPM	TONS	GPM	TONS	GPM	TONS	GPM	TONS	GPM
115	3.16	12	3.64	12	4.21	12	4.74	12	5.27	12

MACH-060-1 CAPACITIES with 20% Glycol										
LWT (°F)	ENTERING AIR TEMPERATURE (°F)									
	17		35		45		55		65	
	TONS	GPM	TONS	GPM	TONS	GPM	TONS	GPM	TONS	GPM
115	3.13	12	3.61	12	4.17	12	4.69	12	5.21	12

MACH-060-1 CAPACITIES with 30% Glycol										
LWT (°F)	ENTERING AIR TEMPERATURE (°F)									
	17		35		45		55		65	
	TONS	GPM	TONS	GPM	TONS	GPM	TONS	GPM	TONS	GPM
115	3.13	12	3.61	12	4.17	12	4.69	12	5.21	12

MACH-060-1 CAPACITIES with 40% Glycol										
LWT (°F)	ENTERING AIR TEMPERATURE (°F)									
	17		35		45		55		65	
	TONS	GPM	TONS	GPM	TONS	GPM	TONS	GPM	TONS	GPM
115	3.09	12	3.57	12	4.12	12	4.65	12	5.16	12

MACH-060-1 CAPACITIES with 50% Glycol										
LWT (°F)	ENTERING AIR TEMPERATURE (°F)									
	17		35		45		55		65	
	TONS	GPM	TONS	GPM	TONS	GPM	TONS	GPM	TONS	GPM
115	3.06	12	3.53	12	4.08	12	4.60	12	5.11	12

Based on compressor data.

These specifications are subject to change without notice.

MACH-060-1 Heat Pump Chiller Pump Curve

Pump Model Numbers
SSP-1 = 208/230-1-50/60
SSP-2 = 208/230/460-3-50/60
0.5 Horsepower

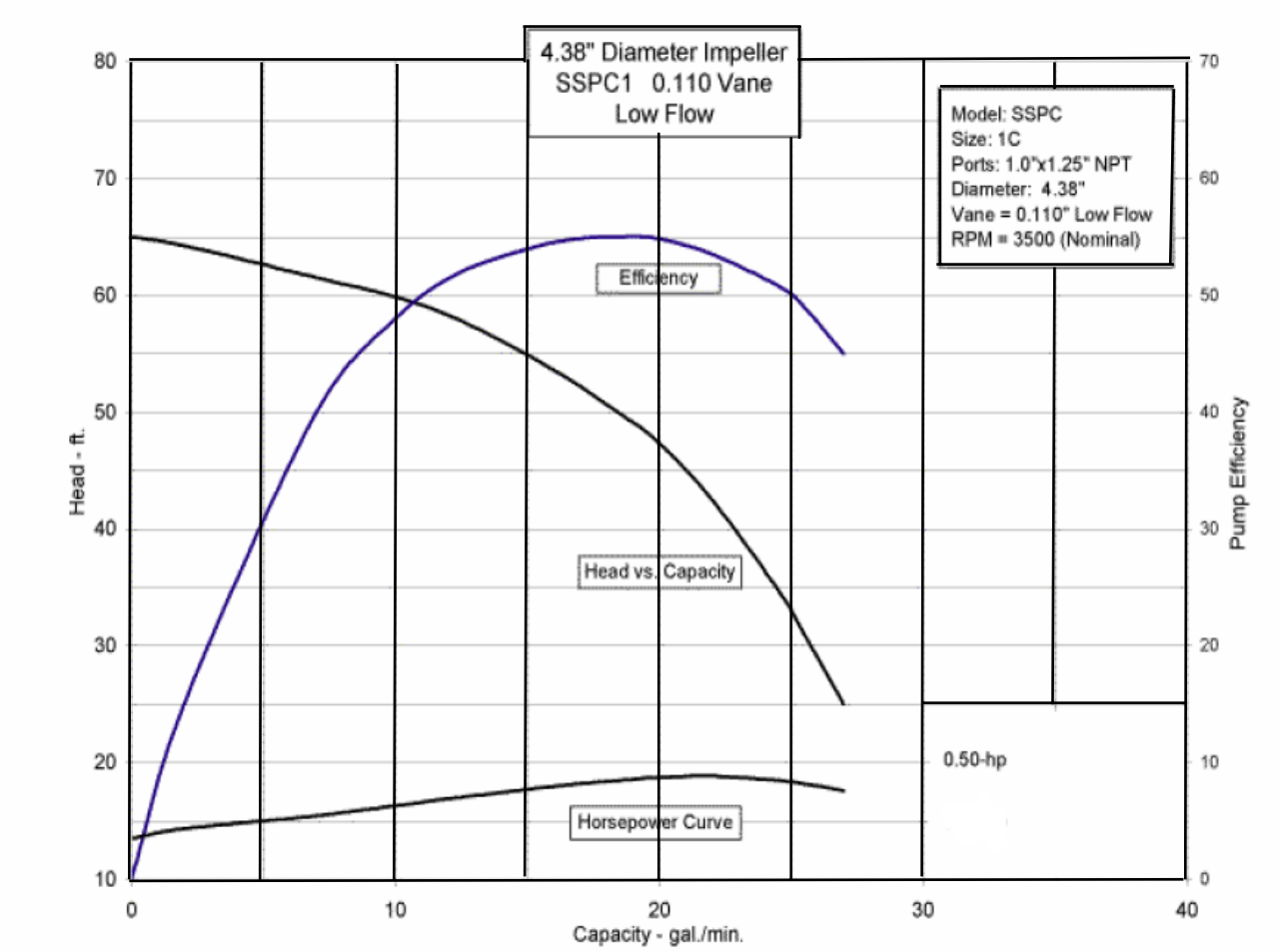

INSTALLATION and OPERATION MANUAL



MACH-060-1

Multiaqua™

Table of Contents

Page

Introduction 13

System Description & Sequence of Operation 14

Electrical & Physical Data 16

Service Clearances 17

Description of Electrical Controls 18

Chiller Controls Sequence of Operation 21

Refrigeration System Operation 23

Description of Refrigeration Components 24

Piping System Components 25

Layout & Design 26

Banked Chiller Configuration 27

Installation Notes 28

Propylene Glycol Content 29

Expansion Tank 29

Filling the System with Propylene Glycol 30

Air Elimination 30

Liquid Solution Balancing 31

Wiring Diagrams 32

Multiaqua Heat Pump Chiller Manual

The Multiaqua Chiller System is the only air conditioning/refrigeration system of its kind in the world today offering the degree of application flexibility described in the following manual.

The Multiaqua Chiller System is not only unique in its application flexibility; it is unique in superior quality, rated capacity and rugged durability. When installed in accordance with these instructions the system will deliver years of trouble free service.

Proper equipment sizing, piping design and installation are critical to the performance of the chiller. This manual is meant to be a "how to" introduction to piping and installing the Multiaqua Chiller System.



RECOGNIZE THIS SYMBOL AS AN INDICATION OF IMPORTANT SAFETY OR INSTALLATION RELATED INFORMATION.

Pressure loss information for a Composite Piping System has been used in preparing this manual. Web site information addresses are supplied throughout this manual for piping and accessory information. The plumbing industry also has pressure drop information on ferrous and copper piping systems, which will vary from the composite pipe system outlined in this manual. Composite pipe is the recommended pipe for Multiaqua Chiller System installations; however existing piping systems can be adapted to the system.

The following sections will describe each component, and how it functions within the system. Installation information is supplied where appropriate. The piping design section (page 26) will explain the design and layout out of the piping system from a "how to" perspective. Following the examples provided will enable the installer to determine the correct pipe and accessory sizing, as well as equipment location. It is important to know before installation if the proposed system will operate correctly, and doing a formal layout of a new application or review of an existing piping system will make that determination.

Throughout this manual the term **liquid solution** is used in place of water. The chiller circulates a solution of water and Propylene Glycol.



It is essential to operate the system with a minimum of 10% propylene glycol.

DO NOT OPERATE THIS SYSTEM USING WATER ALONE!

FOR PROPER LIQUID SOLUTIONS MIX RATIOS, REFER TO PAGE 6 OR THE GLYCOL MANUFACTURER'S RECOMMENDED MIX RATIOS.

System Description & Sequence of Operation



The Multiaqua MACH (Multiaqua Air Conditioning Heat Pump) is self-contained Reverse Cycle Chiller featuring dual condenser fans, direct expansion outdoor coil (air side) and a brazed plate liquid solution heat exchanger (liquid side). The outdoor coil acts as a condenser expelling heat from the refrigeration process in cooling and is an evaporator coil in the reverse cycle heat pump mode. The MACH utilizes a SporlanTM thermostatic expansion valve (TXV) for the outdoor coil and a piston type-metering device on the liquid solution heat exchanger. In the cooling mode the outdoor coil (condenser) expansion/check valve is bypassing liquid refrigerant to the liquid solution heat exchanger (evaporator) metering device. In the heating mode (reverse cycle) the outdoor coil (evaporator) expansion/check valve is receiving condensed liquid refrigerant from the liquid solution heat exchanger (condenser) metering device. Integral safety features are included on all models; including a low water flow control, a refrigerant high pressure switch and a five (5) minute delay on break timer.

The system, depending on which mode has been selected (HEAT or COOL) will provide either a chilled or heated liquid solution (water and Propylene Glycol mix). The solution temperature is controlled by the liquid solution temperature control (DTC) which is factory set at 115°/44° (F). The liquid solution is circulated through the heat exchanger by an internal stainless steel pump, which is protected with Silicon Carbide-Viton Seals, to the system supply piping and to the airside fan coil/s. Avoid switching over from heat to cool when the liquid solution temperature is above 80 degrees F. This could cause damage to chiller components.

⚠ **The Pump will not self-prime. A full column of liquid solution is necessary for operation. Do not attempt to operate the pump without a full charge of liquid solution or seal damage will occur.**

If the external load is a series of fan coils, each one must contain an individual zone valve to control the liquid flow. The zone valves are selected to provide the flow rate needed to achieve the proper capacity from the fan coil they control.

The temperature of the circulating liquid solution is controlled for either mode by a two (2) stage DTC (digital temperature control) with adjustable set points for precision control. A system sequence of operation, individual control description, troubleshooting information and a schematic are included in the controls section of this manual.

The liquid solution piping system suggested for new installations is a composite piping system. The composite system delivers easy on installation, low-pressure drops and will not rust or corrode. Existing and new copper or ferrous piping systems are adaptable to the Multiaqua system.

It must be recognized that ferrous pipe may cause accelerated deterioration of the brazed plate heat exchanger and could void the heat exchanger warranty.

**Also Included in this manual is a piping section that includes piping system design, installation and balancing.*



Equipment sizing for a Multiaqua solution system can utilize Load Diversity. Diversity is described as the actual amount of cooling or heating needed by various sections of a structure at a given time. Conventional central ducted air systems are designed for peak load conditions and must supply peak load capacity at all times to the conditioned space whether or not a demand exists for other zones. This introduces great system inefficiencies. A system sized to take advantage of diversity would determine the load by the time of day, building exposure, usage and adjust accordingly. To further define load diversity a structure utilizing a conventional central ducted air system would require six (6) tons of capacity at peak load. However, with the Multiaqua -MACH the specific load can be addressed and a smaller system utilized (potentially four (4) or (5) tons instead of the full capacity's 6 ton system. By taking advantage of load diversity, the system supplies the necessary amount of capacity to the spaces or zones on an as needed basis instead of producing a larger capacity 100% of the time.

To clarify this concept we will adapt the above information to a basic Multiaqua System. Utilizing diversity and a MACH-060 five (5) ton reverse cycle chiller we can supply chilled liquid solution to six (6) MHWW-12 (1) ton fan coils. Three (3) of which are located in rooms facing west and three (3) in rooms facing east. Diversity dictates that the high load zones (spaces) in a building need more cooling during different times of the day. A cooling load in the morning (AM) would be greatest for portions of a structure facing east. During midday spaces with skylights or upper floors or multi-floor structures impose more loads on the system. In the afternoon (PM) the load shifts to western facing spaces of the structure. The Multiaqua system will adjust to load by supplying chiller or heated liquid solution to where and when it's needed depending on the changing load of the structure. In this simple example, it would be possible for a five (5) ton system to handle what would normally be a six-ton load on a conventionally ducted system.
Load diversity can best be determined by referring to the ACCA (Air Conditioning Contractors of America) Manual "J", refer to Appendix A-2, Multi-Zone Systems. ACCA can be located at the following Internet address: www.acca.org.

ELECTRICAL AND PHYSICAL DATA

The information contained in this manual has been prepared to assist in the proper installation, operation and maintenance of the chiller. Improper installation, or installation not made in accordance with these instructions can result in unsatisfactory operation and/or dangerous conditions and can cause the warranty to become void. Read this manual and any instructions packaged with separate equipment required to make up the system prior to installation. Retain this manual for future reference.

 Separate and independent power supplies and disconnects must be provided. These chillers have separate and discreet power requirements within one cabinet.

 All power to the chiller must be turned off prior to opening cabinet and or servicing.

 Failure to properly ground chiller can result in death.

 Disconnect all power wiring to chiller before maintenance or service work. Failure to do so can cause electrical shock resulting in personal injury or death.

 All wiring must be done in accordance with the NEC (National Electric Code) as well as state and local codes, by qualified electricians.

 Product warranty does not cover any damages or defect to the chiller caused by the attachment or use of any components, accessories or devices (other than those authorized by the manufacturer) into, onto or in conjunction with the chiller. You should be aware that the use of unauthorized components, accessories or devices may adversely affect the operation of the chiller and may also endanger life and property. The manufacturer disclaims any responsibility for such loss or injury resulting from the use of such unauthorized components, accessories or devices.

 Upon receiving the chiller and components, inspect for any shipping damage. Claims for damage, either apparent or concealed should be filed immediately with the shipping company.

 No liquid other than the solution of water and Propylene Glycol ,mixed in accordance with Glycol Solution Data on page 6, shall be used in the piping system.

 Corrosive environments may subject metal parts of the chiller to rust and deteriorate. The oxidation could shorten the chiller's useful life. Corrosive elements include salt spray, fog or mist in sea coastal areas, sulfur or chlorine from lawn watering systems and various chemical contaminants from industries such as paper mills and petroleum refineries.

If the unit is to be installed in an area where contaminates are likely to be a problem, special attention should be given to the equipment location and exposure.

- Avoid having lawn sprinklers spray directly on the chiller cabinet.
- In coastal areas, locate the chiller on the side of the building away from the water front.
- Elevating the chiller off of its slab or base enough to allow air circulation will help avoid holding water in contact with the cabinet base.
- Regular maintenance will reduce the build-up of contaminants and help protect the cabinet finish.
- In severe locations having the chiller coated with an "epoxy" or other coating formulated for air conditioning systems located in coastal areas may be necessary.

Consult local building codes or ordinances for special installation requirements. When selecting a site to locate the chiller, consider the following:

• A minimum clearance of 60” on the front fan discharge, 12” on the rear air inlet and a 24” clearance is required on the service side.

• The chiller can be located out or indoors. If installed indoors there must be 4500 cfm of outdoor air changes circulated through the mechanical room to sufficiently operate the chiller. No ductwork can be connected to the chiller’s condenser or condenser fans.

• If a concrete slab is used, do not connect the slab directly to any building’s foundation or structure to prevent sound transmission.

• Locate the slab on a level surface that is above grade to prevent ground water from entering the chiller cabinet.

Regular cleaning of the cabinet air filters will be necessary. The filters clean the air which cools the circulation pump.

Stated Service Clearances

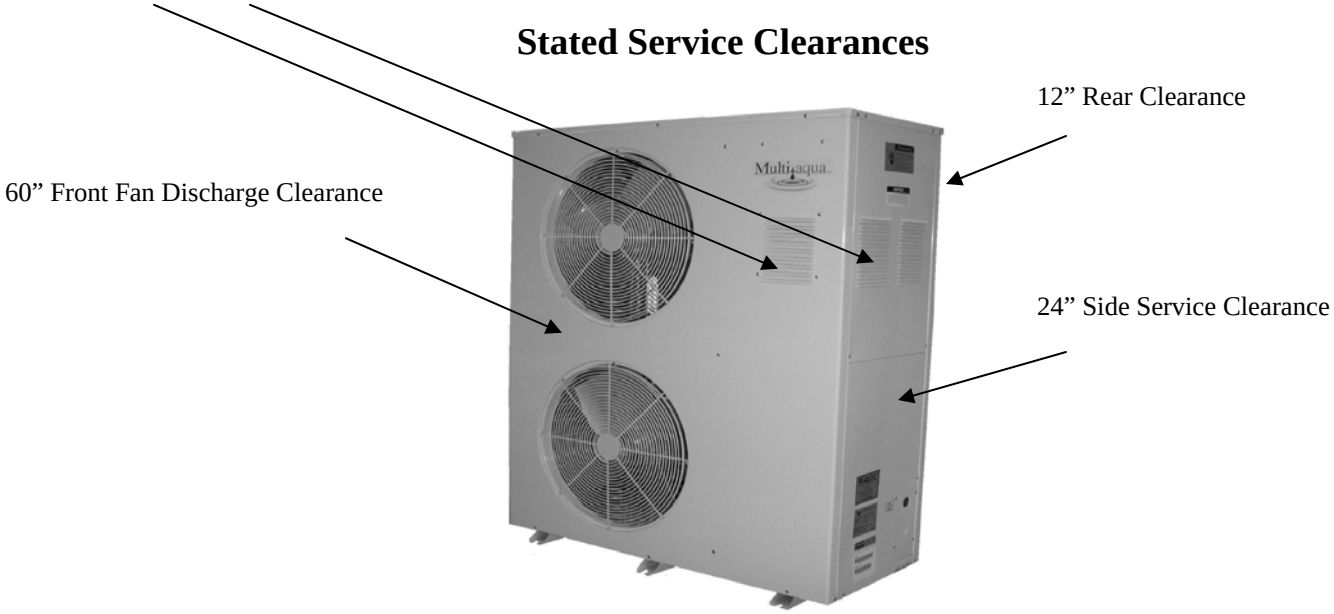

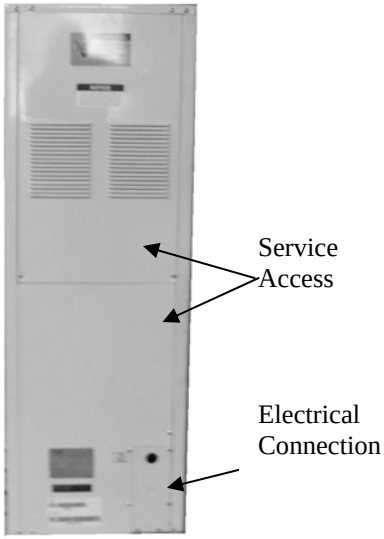

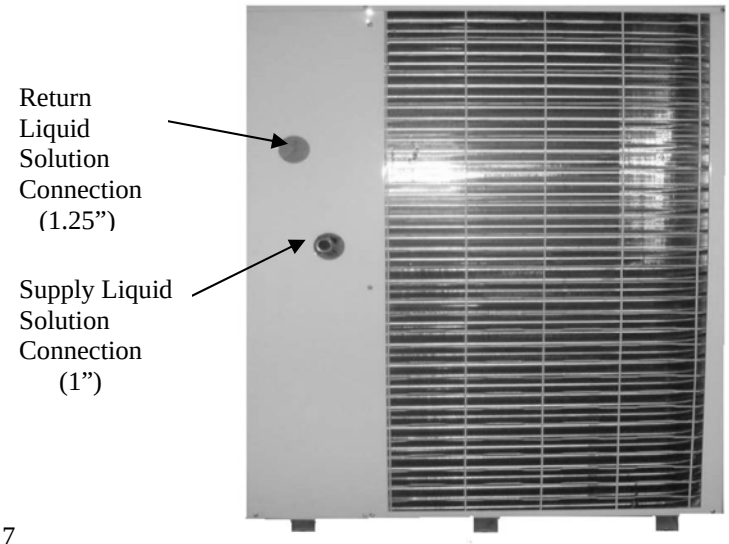

Description of Electrical Controls

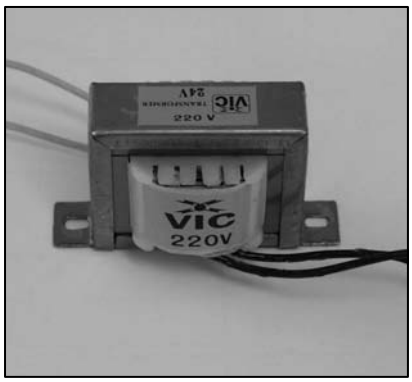

Control Transformer: The control transformer is rated at 24 vac, 40 va (1.6 amps @ 24vac)

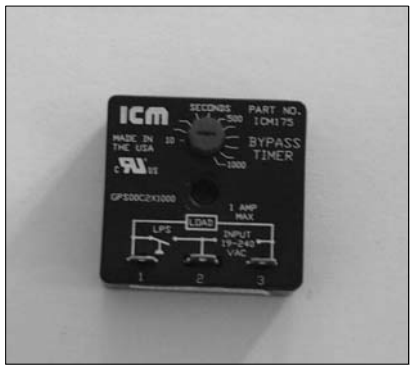

Pump Bypass Timer: The pump bypass timer is a 24 vac, 3-wire control. When energized the timer will bypass the flow switch for 10 seconds (by creating a circuit to the pump relay), energizing the pump relay, allowing the pump to operate long enough to close the flow switch. In a normally operating system the flow switch will stay closed powering the pump relay in series with the low and high- pressure switches. Should the flow switch open, the timer can only be reset by opening and closing the chiller's line voltage disconnect.

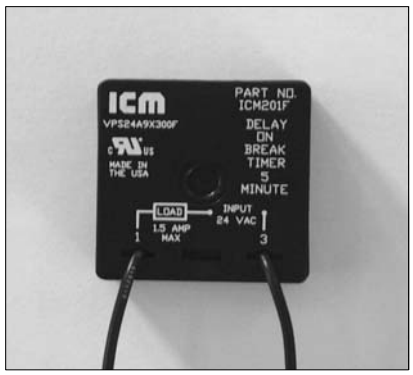

Refrigerant System Timer: The refrigerant timer is a 24 vac, 5-minute delay on break, 20wire timer. The normally closed contacts of the timer energize the compressor contactor through the chilled solution control. When the chilled solution control contacts open, the timer delays by opening its contact for 5-minutes before resetting to the closed position.



High Pressure Switch: The high-pressure switch is an automatic reset control that senses compressor discharge line pressure. It opens at 400 PSIG and closes at 300 PSIG.

Description of Electrical Controls (continued)

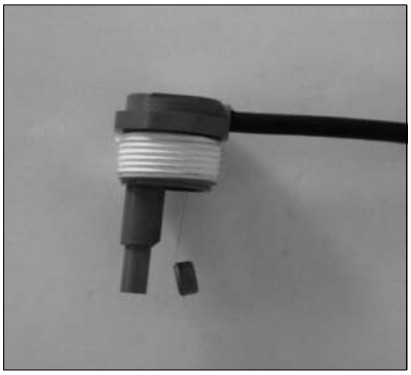

Flow Switch: The flow switch senses liquid solution flow. The paddle of the switch is inserted through a fitting into the pump discharge line. Liquid solution flow deflects the paddle closing the switch. The flow switch is position sensitive. The arrow ↑ on the switch must point in the direction of liquid solution flow.

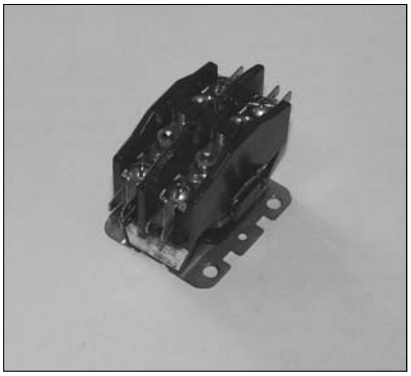

Compressor Contactor The compressor contactor energizes the compressor through the two or three normally open contacts. The contactor coil operates (closes the contacts) when energized by 24 vac.



Pump Relay / Contactor: The pump relay energizes the pump through a normally open contact. The pump relay coil operates (closes the contact) when energized by 24 vac.



Liquid Solution Temperature Contro The liquid solution temperature control is an adjustable microprocessor based temperature control. This control receives temperature information from a thermistor located on the liquid solution supply line. A liquid crystal display continually indicates liquid solution temperature. The control is mounted inside the chiller cabinet.

Description of Electrical Controls (continued)



Mechanical Switch: The mechanical switch provided in the system allows the operator to choose between one (1) of three (3) modes, "HEAT", "COOL", or system "OFF". In the system "OFF" mode all heating or cooling functions will be suspended and only liquid circulation will continue.

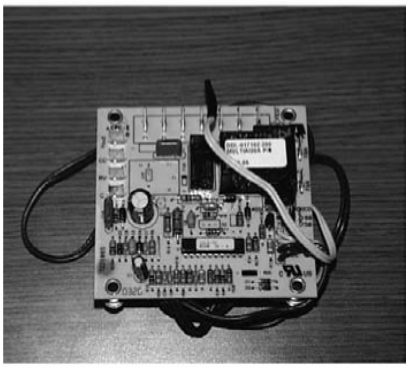

Defrost_Control_Board: The Ranco DDL demand defrost control board sees to it that the coil is defrosted when it frosts over. Its a printed circuit board with on board relays to control the outdoor fan, and reversing valve. It uses the input of coil mounted, and outdoor air sensors to determine when defrost is needed.

Chiller Controls Sequence of Operation

**The paragraphs below will outline the common sequence of operation for the MACH then expand into the operation sequence for both the water heating and water chilling modes of operation. Following this information will be a section on system faults and problems solving.*

The pump will not self-prime. A full column of liquid solution is necessary for proper operation. Do not attempt to operate the pump without a full charge of liquid solution or seal damage will occur.

Common Sequence of Operation

When powered up the Multiaqua Heat Pump Chiller System energizes the control system transformer (208 - 240 volts), creating 24 - volt control voltage.

First the pump bypass timer is energized and temporarily bypasses the flow switch energizing the pump relay. The pump then starts to circulate move liquid solution through the piping system (**in a properly filled and air purged system**)**.** The circulation of liquid solution from the pump discharge keeps the flow switch closed. After a 10 second delay the pump timer contact opens, connecting the flow switch in series with the high and low-pressure switches. The pump will now run continuously unless power is interrupted or the flow switch opens.

**The only difference between heating and cooling modes is which coil is the evaporator and which coil is condenser. Energizing or de-energizing the reversing valve solenoid accomplishes switching coils. See reversing valve in Refrigerant Controls section.*

The mechanical (heat/cool/off) switch selects the mode of operation for the Multiaqua Heat Pump Chiller. If the switch is selected to the off position, only the liquid solution pump will continue to operate. Turning the switch to heat utilizes the same sequence described below but also energized the reversing valve and the Ranco™ DDL defrost control.

If the Digital Temperature Controller (DTC) is calling for cooling the control circuit is routed through the short cycle timer, the three safety switches (the flow, low and high pressure switches), and through the Ranco™ DDL defrost control to the compressor contractor. In heating the same sequence is followed with the exception, the 24-volt signal for compressor operation is passed to and through the defrost control board, for compressor operation. once energized, the contactor starts the compressor and condenser fan motors. The liquid solution controller (DTC) will open at the user programmed set point, causing the refrigerant short cycle timer to open its contact for 5 minutes as it delays before resetting to the closed position. This will de-energize the compressor and condenser fan motors. Power fluctuations will also initiate a 5-minute time delay. The 5-minute time delay allows the refrigerant system a period for pressure equalization, protecting the compressor from short cycling.

The chiller/heat pump temperature controller utilizes a thermistor to monitor the liquid solution temperature change. The temperature is then compared to the set point and differential temperatures, programmed into the control by the user. The set point of the liquid solution temperature, will cause the control to open or close. A cooling example would be control set point is programmed at 44° LWT (leaving water temperature) with a 10° differential, which opens the controller at 44° LWT, and closes it at 54°. A heating example would be the control programmed at 115° LWT with a 10° differential, which opens the control at 115° and closes it at 105°. The differential temperature is the number of degrees above or below set point the temperature programmed by the user into the controller. When liquid solution temperature falls or raises to the set point the controller cycles the compressor off.

• See wiring diagram on page 32

Chillers are shipped with the digital temperature controller set at 44° LWT and a 10° differential for cooling; heating is a 115° LWT and 10° differential.

The chiller/heat pump when operating in the heating mode utilizes the outdoor coil as an evaporator. The evaporator (outdoor coil) in heating must be 20° or more below the outdoor ambient temperature. This means that on a 30° day the coil temperature will be at a 10° or below operating temperature. Operating in this temperature range causes frost to form on the outdoor coil surfaces, which cut down on the heating efficiency and capacity (BTUH). To rid the outdoor coil of this frost build up and restore heating capacity and efficiency a Ranco DLD™ Demand Defrost Control is used.

Demand Defrost Control

The demand defrost control (Ranco DDL™) is a printed circuit board assembly consisting of solid-state control devices with electro-mechanical outputs. The demand defrost control monitors the outdoor ambient temperature, outdoor coil temperature, and compressor run-time to determine when a defrost cycle is required.

Defrost Initiation

A defrost will be initiated when the three conditions below are satisfied:
1) The outdoor coil temperature is below 35°F.
2) The compressor has operated for at least 3 minutes with the outdoor coil temperature below 35°F.
3) The measured difference between the ambient temperature and the outdoor coil temperature is greater than the calculated delta T (temperature difference).
Additionally, a defrost will be initiated if six hours of accumulated compressor run-time has elapsed without defrost, and the outdoor coil temperature below 35°F.

Defrost Termination
Once defrost is initiated, the defrost will continue until fourteen minutes has elapsed or the coil temperature has reached the terminate temperature. The terminate temperature is factory set at 70°F although the temperature can be changed to 50°F, 60°F, 70°, or 80° by relocating a jumper on the board (jumper and pin location center/right of board).

Temperature Sensors
The coil sensor is clipped to the midsection of the outdoor coil at a point fed by the distribution tubes from the TXV (Thermostatic Expansion Valve). The air sensor is located on the defrost control board, or on a separate wire whip similar to the coil sensor, and is left hanging to sense the outdoor air.

If the ambient sensor fails the defrost control will initiate defrost every 34 minutes with the coil temperature below 35°.

If the coil sensor fails the defrost control will not initiate defrost.

Test Mode
The test mode is initiated by shorting the TEST pins. In this mode of operation, the enable temperature (35°F coil) is ignored and all timers are sped up by a factor of 240. To initiate a manual defrost, short the TEST pins. Remove the short when the system switches to defrost mode. The defrost will terminate on time (14 minutes) or when the termination temperature has been achieved. Short TEST pins again to immediately terminate defrost.

SYSTEM FAULTS:

Flow Switch Opening: The flow switch is normally closed during pump operation. Should liquid solution flow be interrupted for any reason the control will open, shutting down and locking out system operation. The only exception to this is when power is first applied to the unit, and the pump bypass timer bypasses the flow switch for 10 seconds. If flow is less than 3 GPM flow switch will not close.



When the system is first filled with liquid solution and the pump started, expect the system to cycle off on the flow switch, until all of the air is removed from the piping system. The system will have to be reset by opening and then closing the disconnect switch or circuit breaker powering the system.

High Pressure Switch Opening: Should the compressor discharge pressure go high enough to open the high-pressure switch the compressor and outdoor fan motors will shut down. Check for a refrigerant leak, inoperative thermostatic expansion valve, low liquid solution setting, low ambient operation, low liquid solution flow, and in heating a frosted outdoor coil, indicating potential defrost or refrigerant problems. See the electrical Controls Sequence of Operation for a defrost board testing. Page 22.

Refrigeration System Operation

The refrigeration system is a closed loop consisting of a compressor, liquid solution side heat exchanger (evaporator in cooling & condenser in heating), airside outdoor coil (evaporator in heating and condenser on cooling), with combination Thermostatic Expansion Valve/Check Valve (TXV/Check Valve) assemblies on the systems air and liquid solution side. A reversing valve and accumulator are also in the refrigerant loop.

In cooling the hot gas is circulated from the compressor through the reversing valve to the outdoor coil (air side) where the hot gas is condensed into a liquid, then traveling through the outdoor coil mounted TXV/Check Valve, to the TXV/Check Valve on the (liquid solution) brazed plate heat exchanger, where the refrigerant pressure drops as the liquid refrigerant boils off and changes into a vapor (gas) as it picks up heat in the evaporator, then traveling to and through the reversing valve and suction line accumulator back to the compressor.

In heating the hot gas circulated from the compressor through reversing valve, traveling then to and through the TXV/Check Valve at the (liquid solution) brazed plate heat exchanger, where the hot gas is cooled by the lower temperature water circulating through the heat exchanger, condensing the refrigerant into a liquid. The now liquid refrigerant leaves the brazed plate heat exchanger traveling to the TXV/Check Valve where the refrigerant pressure drops as the liquid refrigerant boils off and changes into a vapor (gas) as it picks up heat in the evaporator, then traveling to and through the reversing valve and suction line accumulator and back to the compressor.

Description of Refrigerant Components



Scroll Compressor: Scroll technology ensures reliable high efficiency. All Multiaqua units feature Scroll performance at a low sound level over a wide range of operating conditions.

Caution must be used when near the top of the Scroll compressor. Operating temperatures can be high enough to cause serious Injury.



Brazed Plate Heat Exchanger: The "Heat Exchanger" or evaporator is of a

brazed copper and stainless steel design. Refrigerant and liquid solution is channeled through narrow openings between plates and flows in opposite directions. The counter flow design and fluid turbulence ensures maximum heat exchange at minimal pressure drop.



Bi-Directional Expansion/Check Valve: Multiaqua heat pump chillers are equipped with Thermostatic Expansion/Check Valve combination. The valves feature a liquid charged sensing bulb for constant superheat at various load conditions during the heat and cool mode of chiller operation. During the reverse cycle the internal check valve opens to allow refrigerant to flow through the valve with no pressure drop through the check valve.



Suction Accumulator: The suction accumulator is used to prevent excessive quantities of liquid refrigerant and oil from returning to the compressor during normal operation.



Reversing Valve: The four (4) way reversing valve when installed in the Multiaqua Heat Pump Chiller (MACH), reverses t h e direction of refrigerant flow through the heat exchanger and outdoor coil to provide heating and cooling from the system and to provide for defrosting of the outdoor coil during low ambient conditions.

Description Of Refrigerant Components (Continued)



Condenser coil: The air-cooled condenser coil is of copper tube with aluminum fin construction. The coil is protected by a painted metal condenser grille.



Piping System Components

Supply Storage Tank: The Supply Storage Tank must be used in systems with less than 25 gallons of liquid solution. The tank prevents rapid cycling of the compressor and acts as a reservoir for chilled liquid solution.

Part Number: WX202H (20 Gallon)
WX422H (42 Gallon)
Supply storage tank must be insulated in the field.

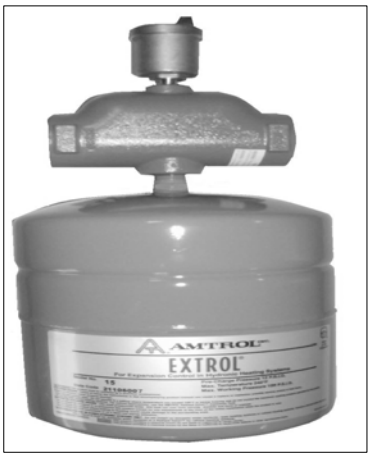

Expansion Tank and Air Scoop: The expansion tank and air scoop assembly is used to compensate for the expansion and contraction of liquid in the system. The air scoop eliminates air entrained in the liquid solution.

Part Number: 1500/1"

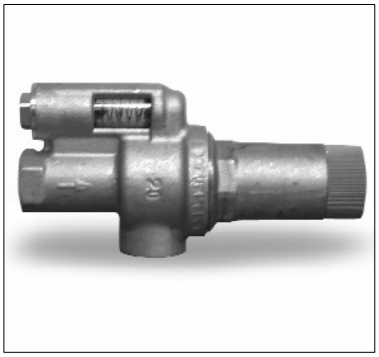

Liquid Solution Bypass Valve: The liquid solution bypass valve relieves system pressure from the supply loop to the return loop as the fan coil control valves are cycled off.

Part Number: D146M1032- 3/4"
D146M1040- 1 1/4"

Piping System Components (Continued)



2- Way Motorized Control Valve: The fan coil's motorized valve controls the flow of liquid solution to the system coil. Each fan coil in the system should have a motorized valve.

Part Number: MZV524E-T 1/2" 2-Way Zone Valve
MZV525E-T 3/4" 2-Way Zone Valve
MZV526E-T 1" 2-Way Zone Valve

Composite Piping Layout and Design: 2-Way Valves

Understanding the function and friction loss of each part of the piping system is important to the layout and successful installation of a chilled liquid solution system.

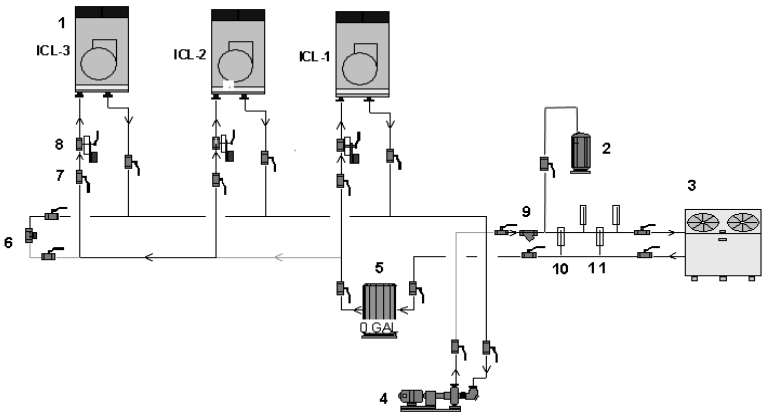

1. Fan Coil
2. Expansion Tank
3. Chiller
4. Pump
5. Storage Tank
6. Bypass Valve
7. Ball Valve
8. Two Way Control Valve
9. Wye Strainer
10. Pressure Indicator
11. Temperature Indicator



3- Way Motorized Control Valve: The fan coil's motorized valve controls the flow of liquid solution to the system coil.

Part Number: VT3212G13A020 1/2" 3-Way Zone Valve
VT3212G13A020 3/4" 3-Way Zone Valve

Composite Piping Layout and Design: 3-Way Valves

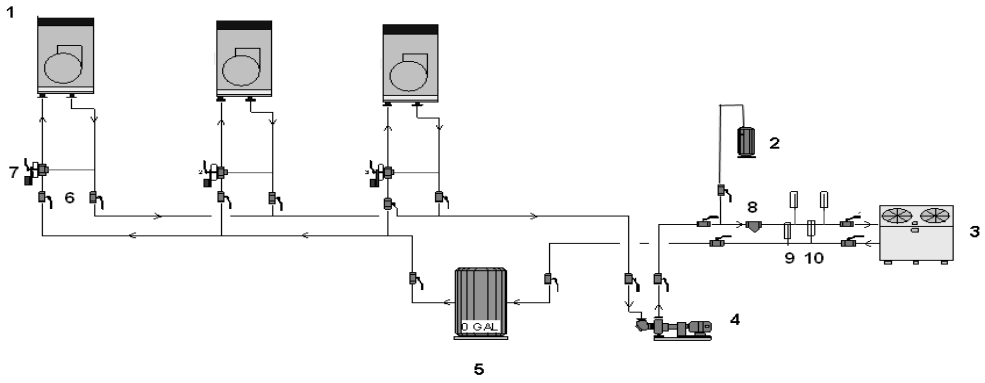

1. Fan Coil
2. Expansion Tank
3. Chiller
4. Pump
5. Storage Tank
6. Ball Valve
7. 3-Way Control Valve
8. Wye Strainer
9. Pressure Indicator
10. Temperature Indicator

The circulation pump is the key performer in the piping system. The pump must circulate the liquid solution through the heat exchanger and piping system to the air handlers. Pumps are designed to deliver a flow rate measured in gallons per minute(GPM). The pump must be able to overcome the resistance to flow (pressure drop) imposed by the chiller components, piping system and air handlers while maintain the necessary flow rates in gallons per minute. Pump capacities in gallons per minute and pressure drop (feet of head) are listed on page 27 and 10.

Banked Chiller Configuration

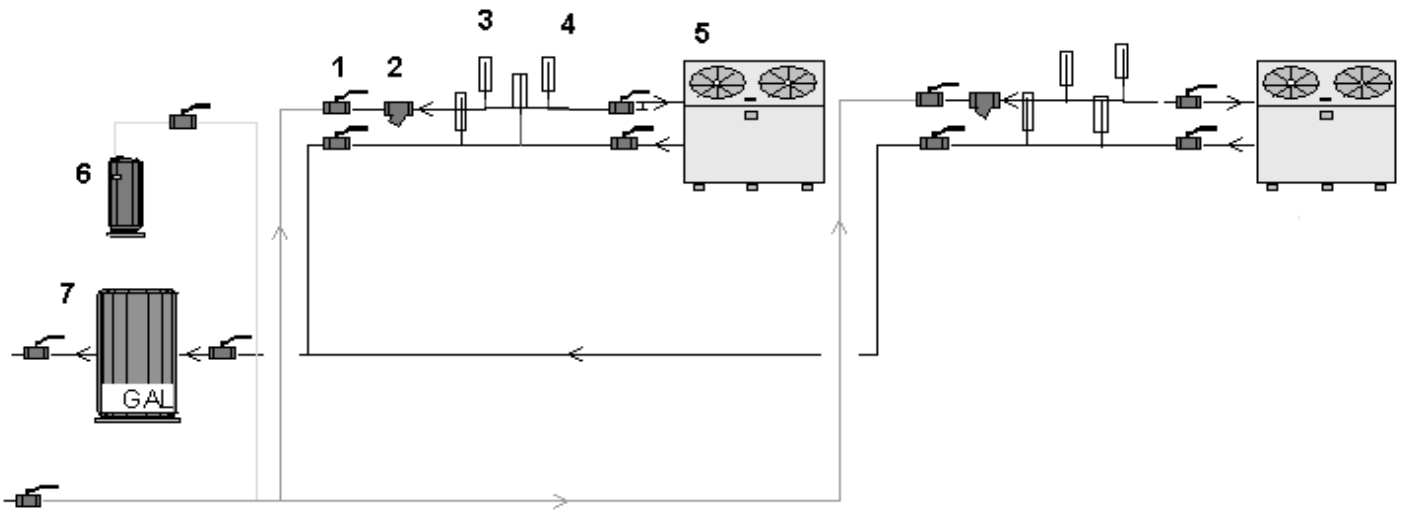

1. Ball Valve
2. Wye Strainer
3. Pressure Indicator
4. Temperature Indicator
5. Chiller
6. Expansion Tank
7. Storage Tank

Notes:
Installing Multiaqua chillers in parallel is recommended.

An adjustable valve must be used to throttle the discharge liquid solution flow rate to appropriate levels based on capacity and glycol mix percentages.

	MACH060
Compressor	Copeland Scroll
Refrigerant	R407c
Heat Exchanger	Brazed Plate
Max.Head Pressure	50 ft
Max Flow rate	14.4 gpm
Min Flow Rate	9.0 gpm
Supply Water Temp "C"	44° F
Return Water Temp "H"	130° F
Min Solution Content	25 gallons
Expansion Tank Size	2 Gallons
Pump	0.5 HP
Water Connections	1"Supply & 1.25" Return
Internal Pressure Loss	1.68 ft of head

Table 1

Piping resistance or pressure drop is measured in feet of head. A foot of head is the amount of pressure drop imposed in lifting liquid solution one foot. Pumps in the Multiaqua system are designed to move rated liquid solution flow in GPMs.

Installation Notes:

Piping such as PEX, steel, copper or PVC can be used with the Multiaqua system. Check local building codes for material conformation. Care must be taken when using PVC as the presence of propylene glycol may destroy plastics. Pressure drop data for the selected piping material is readily available and should be used. Should the Multiaqua chiller be installed using existing steel (ferrous metal) piping system, dielectric fittings must be used at the chiller and air handler. The factory supplied wye strainer will capture particles of rust and sediment inherent with steel piping and should be checked and cleaned after initial start up and opened during regular maintenance during the life of the system.

Any piping used to contain liquid solution must be insulated in accordance with local and national mechanical codes. Information on insulation installation and application can be obtained from Armaflex web site at www.armaflex.com and Owens-Corning site at www.owenscorning.com/mechanical/pipe/. For future servicing of the chiller and air handlers, it is suggested that shutoff valves be installed at the chiller and air handler(s). If ball valves are used, they can double as balancing valve (s) in the supply piping at each air handler. Chiller shut off valves should be attached at the chiller connections with unions.

The air handlers are to be controlled with electrically operated "slow-opening" solenoid valves, circulators or motorized zone valves as manufactured by Erie controls (www.eriecontrols.com/products/index.htm) A remote thermostat or air handler installed digital control operates the valves.

Bypass valves as shown in drawing on page 26, should be installed between the supply and the return chilled liquid solution pipes at a convenient location to the installation. The bypass valve operates to bypass liquid solution between the supply and return chilled liquid solution lines. In the event air handlers valves should shut down, the bypass valve is set to open up and bypass liquid solution between the supply and return lines, relieving pressure and eliminating the possibility of pump cavitations. To adjust the valve, run the system with one air handler solenoid actuated. De-energize the solenoid valve, (at this point no liquid solution will be flowing through the air handlers.) and adjust the bypass valve to relieve pressure between the supply and return piping.

Bleed ports will be factory installed on all Multiaqua air handlers. Bleed ports are opened to eliminate air trapped in the air handlers after filling the system with liquid solution and Propylene Glycol, and before operating the refrigerant compressor in the chiller.

The minimum liquid solution content in the chiller system, (piping, chiller, and air handlers), is 25 U.S. gallons Estimate the system liquid solution content. Should the system have less than 25 gallons of liquid solution content, a chilled liquid solution storage tank must be installed. The tank stores enough chilled liquid solution to prevent frequent chiller compressor cycles at light load and prevents chilled liquid temperature swings at higher load conditions when the chiller compressor is waiting to cycle on the time delay control.

Propylene Glycol must be added to the water used in the system. Propylene helps prevent freeze-ups due to low ambient temperature conditions and low chilled liquid solution temperatures. In comparison to water, Propylene Glycol slightly lessons the temperature exchange in the chiller heat exchanger. However, that is offset by the increased flow of liquid solution through the piping system enabled by the Propylene Glycol. To determine the Propylene Glycol content for various ambient temperatures refer to table 6 page 29.

In no instance should a Multiaqua chiller be installed with less than 10% Propylene Glycol content in the piping system. Using less than the recommended Propylene Glycol percentage content voids equipment warranty.

Installation Notes: (Continued)

Ethylene Glycol is environmentally hazardous and not recommended. Inhibited Propylene Glycol (typical automotive coolant) is not to be used in a Multiaqua Chiller under any circumstances. Dow Chemical's "Ambitrol" family of Glycol-based coolants of food grade Propylene Glycol is suggested. Information on Ambitrol is available from Dow at www.dow.com, search word "Ambitrol".

Table 6

% of Propylene Glycol to Water Content			
Minimum Ambient Temp. F.	Glycol %	Capacity	GPM Adjustment = 100 Capacity
26	10%	x .99	x 1.01
18	20%	x .98	x 1.03
8	30%	x .98	x 1.07
-7	40%	x .97	x 1.11
-29	50%	x .96	x 1.16

Expansion Tank

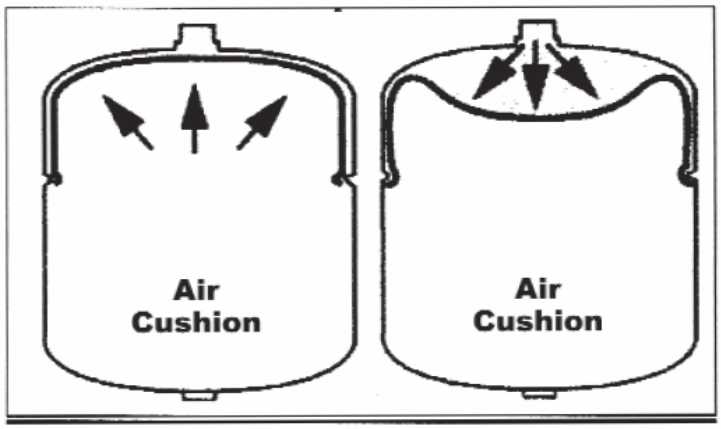

Liquid solution expansion and contraction within the closed system must be compensated for by utilizing an expansion tank. The expansion tank used with the Multiaqua system, is a steel tank with a rubber bladder attached to it internally. There is air pressure on one side of the rubber bladder that keeps the bladder pushed against the sides of the tank before the system is filled with liquid solution (illustration above). As the liquid solution heats up the bladder,will be pushed further away from the tank walls, allowing for expansion and contracting as the liquid solution temperature changes. By flexing, the bladder controls the system pressure adjusting to temperature variations of the chilled liquid solution system.

It is critical that the expansion tank's air bladder pressure be less than the system solution pressure. Air pressure can be measured with an automotive tire gauge at the bicycle valve port on the expansion tank. Bleeding air out of the bladder or increasing the pressure with a bicycle pump will adjust pressure.

System must use a liquid solution storage tank if system volume is less than 25 U.S. gallons.

Filling System with Liquid Solution and Coolant (Propylene Glycol)

Concentrations of Propylene Glycol in excess of 50% will destroy o-rings in fittings and pump. Water should be added to the system first or a liquid solution diluted Propylene Glycol mix.

Before filling system with Propylene Glycol and water, pressure test the piping system with compressed air. Testing should be done at a minimum of 50 psi but no greater than 60 psi.
The system should hold air pressure for a minimum of one hour with no leakage.

System that contains 50 or more U.S. gallons should have a tee fitting with a stopcock installed in the return line close to the chiller. The stopcock can be opened and attached to a hose with a female female hose fitting. In the open end of the hose section (1 -1.5 feet long) insert a funnel and pour into the system the diluted Propylene Glycol/liquid solution mixture or add water first and then the quantity of Propylene Glycol needed for minimum ambient protection (refer to page 29 table 6). After adding the Propylene Glycol /water mixture, or liquid solution and then coolant proceed to add enough water to the system to achieve a 15 psi gauge pressure. To measure system pressure shut off the stopcock, remove hose and attach a water pressure gauge. Open the stopcock to read system pressure.

Systems that use the Chilled Liquid Solution Storage Tank should be filled at the tee/stopcock fitting in the outlet fitting of the storage tank. Fill the tanks with 10 gallons of water and with a funnel pour the calculated amount of Propylene Glycol into the tank. The amount of Propylene Glycol added should be calculated to achieve minimum ambient protection. (Refer to page 29 Table 6) After adding Propylene Glycol, fill the system with enough liquid solution to bring system pressure to approximately 15 psi gauge pressure. To measure system pressure shut off the stopcock and attach a water pressure gauge. Open the stopcock to read system pressure.

Air Elimination

Since we have the system filled we must eliminate the air left in the system. Briefly open each bleed valve at the air handlers and allow trapped air to escape. This will eliminate much of the air left in the system.
There is an air bleed located in the top of the discharge line of the chiller. Ensure it has been purged of air.
Next we will start the pump and continue bleeding air from the system. Be sure the chiller has line voltage available to it and set the chilled liquid solution control up to 100°F, which will ensure that only the pump runs at this point. The pump should now start and remain running. Should the pump stop at any time during this process it is an indication that the flow switch had air move across it allowing the circuit to be interrupted. Continue to bleed some air out of the system at the highest locations before resetting the pump bypass timer to get the pump running again. Open and close the power supply switch to the chiller to restart the pump. Continue bleeding air with the pump operating. You may have to start and re-start the pump a few times to complete air removal.

All piping systems should have a minimum of 10% Propylene Glycol in the system even in climates with non-freezing ambient temperatures.

Using less than the recommended Propylene Glycol percentage content voids equipment warranty.

Liquid solution control valves (solenoid or motorized valves) should be selected for low pressure drop. If a selected valve contributes to pushing your total head calculation to more than 50 feet of head, a larger valve may be needed to bring your total head below the maximum of 50 feet.

Liquid Solution Balancing:

Liquid solution balancing will require an accurate digital thermometer to measure return line liquid solution temperature at each air handler. Set the chilled liquid solution temperature control in the chiller at a normal operational temperature (44°F) and measure pump discharge temperature with the digital thermometer to check system solution temperature. After the chilled liquid solution temperature has lowered to the set point begin the balancing process. The system must be free of air and each air handler set at a temperature low enough to continue cooling operation (and liquid solution flow) during the balancing process. Begin by measuring the return line chilled liquid solution temperature of each air handler. Begin incrementally closing the supply line balance valve at the air handlers with the lowest return line chilled liquid solution temperature. Continue this process until each air handler has close to the same return line chilled liquid solution temperature

MACH-060-1 Wiring Diagram

208/230-1-50/60

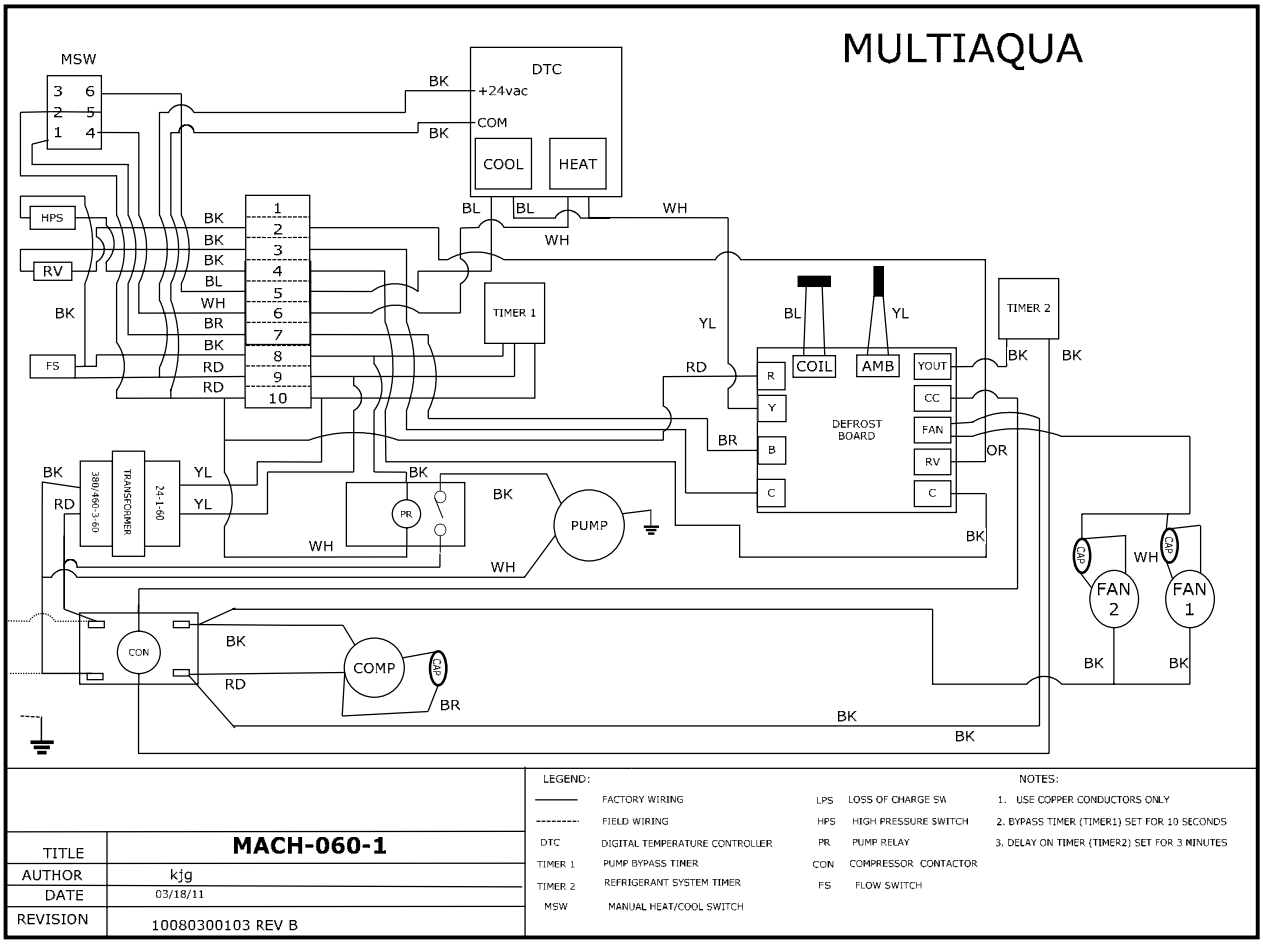

TITLE	**MACH-060-1**
AUTHOR	kjg
DATE	03/18/11
REVISION	10080300103 REV B

LEGEND:

———	FACTORY WIRING
- - - - - - - - -	FIELD WIRING
DTC	DIGITAL TEMPERATURE CONTROLLER
TIMER 1	PUMP BYPASS TIMER
TIMER 2	REFRIGERANT SYSTEM TIMER
MSW	MANUAL HEAT/COOL SWITCH
LPS	LOSS OF CHARGE SW
HPS	HIGH PRESSURE SWITCH
PR	PUMP RELAY
CON	COMPRESSOR CONTACTOR
FS	FLOW SWITCH

NOTES:

1. USE COPPER CONDUCTORS ONLY
2. BYPASS TIMER (TIMER1) SET FOR 10 SECONDS
3. DELAY ON TIMER (TIMER2) SET FOR 3 MINUTES

MACH-060-1-L with Low Ambient Kit Wiring Diagram

208/230-1-50/60

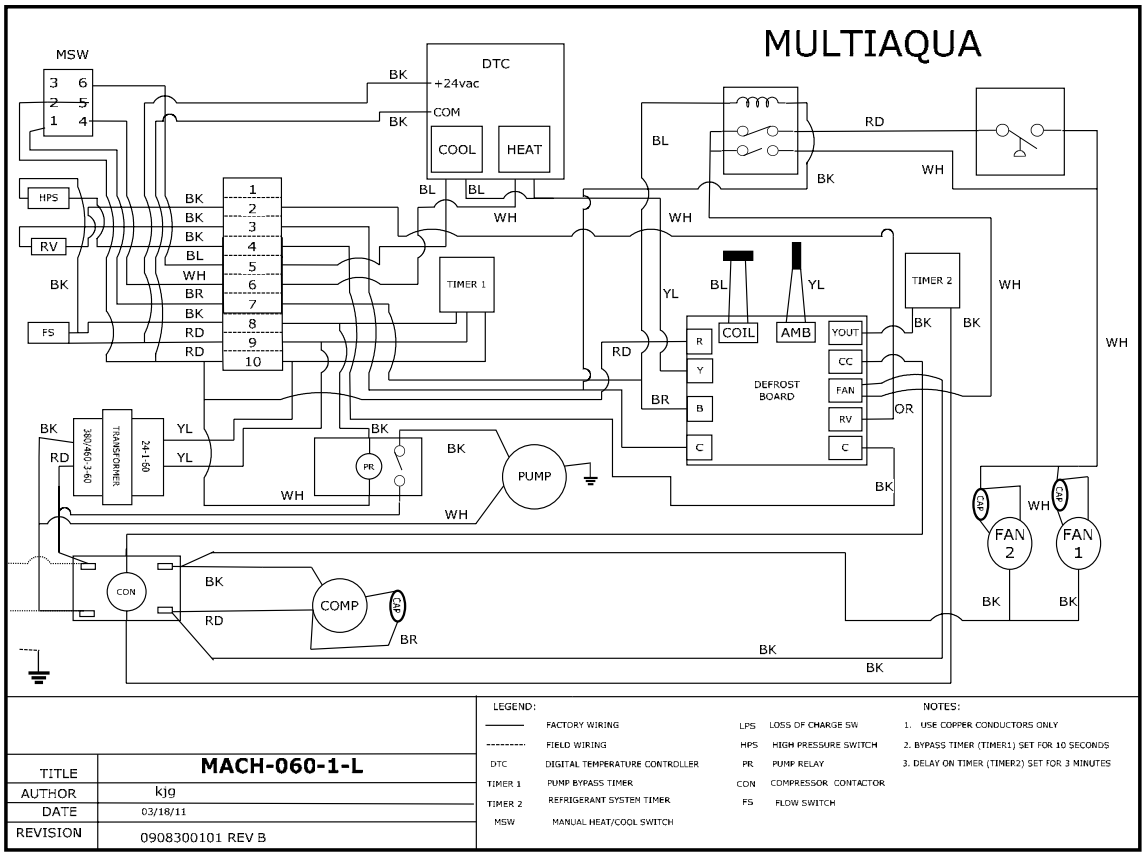

MACH-060-1 CERTIFIED DRAWING

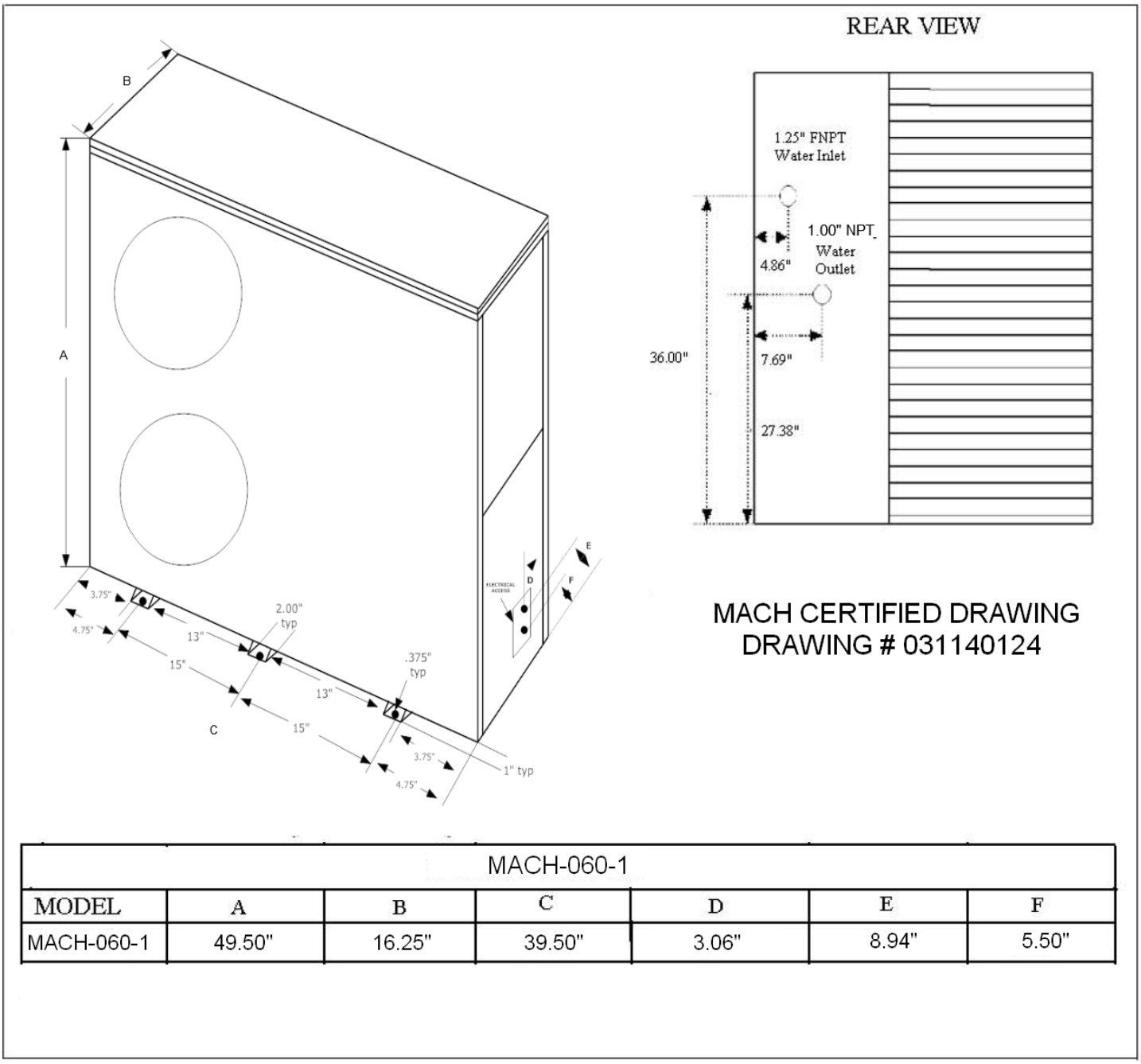

MACH-060-1						
MODEL	A	B	C	D	E	F
MACH-060-1	49.50"	16.25"	39.50"	3.06"	8.94"	5.50"

January 2008
Multiaqua Equipment Sound Levels

The following will detail the "Sound Levels" of the Multiaqua equipment line.

Air Cooled Chillers

MAC 036, 048, 060 Chillers: 69 dbs (A)

MAC120 Chillers: 75 dbs (A)

Hi-Wall Fan Coils

MHWX-09 / MHWW-09: DX and chilled water Hi-Wall fan coils: 42 dbs (A).
MHWX-12 / MHWW-12: DX and chilled water Hi-Wall fan coils: 43 dbs (A).
MHWX-18 / MHWW-18: DX and chilled water Hi-Wall fan coils: 45 dbs (A).
MHWX-24 / MHWW-24: DX and chilled water Hi-Wall fan coils: 46 dbs (A).
MHWX-36 / MHWW-36: DX and chilled water Hi-Wall fan coils: 48 dbs (A).

Universal Mount Fan Coils

FSFCA-04 / CFFWA-04: DX and chilled water Universal Mount fan coils: 42 dbs (A).
FSFCA-06, 08 / CFFWA-06, 08: DX and chilled water Universal Mount fan coils: 44 dbs (A).
FSFCA-10 / CFFWA-10: DX and chilled water Universal Mount fan coils: 46 dbs (A).
FSFCA-10, 12 / CFFWA-10, 12: DX and chilled water Universal Mount fan coils: 48 dbs (A).
FSFCA-16, 20 / CFFWA-16, 20: DX and chilled water Universal Mount fan coils: 50 dbs (A).

Hideaway Fan Coils

MHCCX-04 / MHCCW-04: DX / chilled water with electric heat Hideaway fan coils: 42 dbs (A)
MHCCX-06 / MHCCW-06: DX / chilled water with electric heat Hideaway fan coils: 44 dbs (A)
MHCCX-08 / MHCCW-08: DX / chilled water with electric heat Hideaway fan coils: 46 dbs (A)
MHCCX-10 / MHCCW-10: DX / chilled water with electric heat Hideaway fan coils: 48 dbs (A)
MHCCX-12 / MHCCW-12: DX / chilled water with electric heat Hideaway fan coils: 49 dbs (A)

MHNCCX-04 / MHNCCW-04: DX / chilled water with hot water heat Hideaway fan coil: 40 dbs (A)
MHNCCX-06 / MHNCCW-06: DX / chilled water with hot water heat Hideaway fan coil: 42 dbs (A)
MHNCCX-08 / MHNCCW-08: DX / chilled water with hot water heat Hideaway fan coil: 44 dbs (A)
MHNCCX-10 / MHNCCW-10: DX / chilled water with hot water heat Hideaway fan coil: 46 dbs (A)
MHNCCX-12 / MHNCCW-12: DX / chilled water with hot water heat Hideaway fan coil: 48 dbs (A)

MCCX-16 / MCCW-16: DX and chilled water Hideaway fan coil. 46 dbs (A)
MCCX-20 / MCCW-20: DX and chilled water Hideaway fan coil. 46 dbs (A)

Disclaimer: Specifications are subject to change without notice. All tests conducted in non-echoic chambers. Sound levels were measured at five feet from the unit. Levels were measured using free air delivery.

MITSUBISHI ELECTRIC

SPLIT-TYPE AIR CONDITIONERS

Changes for the Better

Revision B:
- MUZ-D•NA-[1]/-[U2] and MUY-D•NA-[1] have been corrected.

Please void OBH502 REVISED EDITION-A.

OUTDOOR UNIT
SERVICE MANUAL

HFC utilized
R410A

No. OBH502
REVISED EDITION-B

Models

MUZ-D30NA/-[1]/-[U1]/-[U2]
MUZ-D36NA/-[1]/-[U1]/-[U2]
MUY-D30NA/-[1]
MUY-D36NA/-[1]

Indoor unit service manual
MSZ-D•NA Series (OBH501)
MSY-D•NA Series (OBH501)

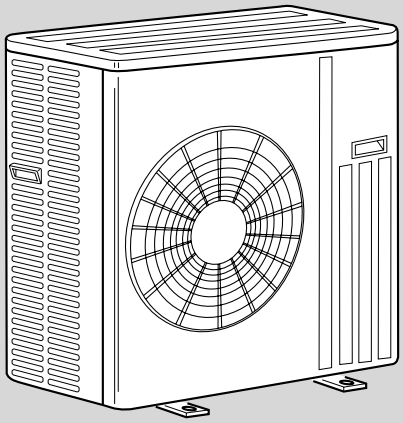

CONTENTS

1. TECHNICAL CHANGES ····· 3
2. PART NAMES AND FUNCTIONS ····· 3
3. SPECIFICATION ····· 4
4. OUTLINES AND DIMENSIONS ····· 6
5. WIRING DIAGRAM ····· 7
6. REFRIGERANT SYSTEM DIAGRAM ····· 11
7. DATA ····· 13
8. ACTUATOR CONTROL ····· 20
9. SERVICE FUNCTIONS ····· 21
10. TROUBLESHOOTING ····· 22
11. DISASSEMBLY INSTRUCTIONS ····· 41

PARTS CATALOG (OBB502)

NOTE:
RoHS compliant products have <G> mark on the spec name plate.

Mr.SLIM™

Revision A:

• 3. SPECIFICATION has been corrected.

Revision B:

• MUZ-D•NA-1/-U2 and MUY-D•NA-1 have been corrected.

1 TECHNICAL CHANGES

MUZ-D30NA MUZ-D30NA-U1
MUZ-D36NA MUZ-D36NA-U1
MUY-D30NA
MUY-D36NA

1. New model

MUZ-D30NA → MUZ-D30NA-1 MUZ-D30NA-U1 → MUZ-D30NA-U2
MUZ-D36NA → MUZ-D36NA-1 MUZ-D36NA-U1 → MUZ-D36NA-U2
MUY-D30NA → MUY-D30NA-1
MUY-D36NA → MUY-D36NA-1

1. Wiring diagram has been changed.
2. Fan motor has been changed.

2 PART NAMES AND FUNCTIONS

MUZ-D30NA MUZ-D36NA MUY-D30NA MUY-D36NA

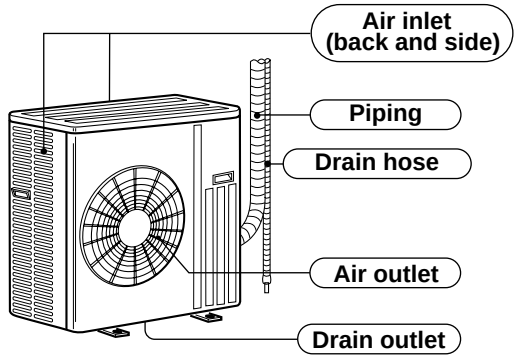

3 SPECIFICATION

Item \ Model			MSZ-D30NA	MSY-D30NA	MSZ-D36NA	MSY-D36NA
Capacity Rated (Minimum ~ Maximum)	Cooling ❄1	Btu/h	30,700 (9,800 ~ 30,700)	30,700 (9,800 ~ 30,700)	32,000/33,200 (9,800 ~ 32,000) / (9,800 ~ 33,200)	33,200/34,600 (9,800 ~ 33,200) / (9,800 ~ 34,600)
	Heating 47 ❄1		32,600 (8,700 ~ 34,000)	—	35,200 (8,700 ~ 36,000)	—
Capacity	Heating 17 ❄2	Btu/h	20,800	—	22,800	—
Power consumption Rated (Minimum ~ Maximum) (TOTAL)	Cooling ❄1	W	3,850 (620 ~ 3,850)	3,380 (620 ~ 3,380)	4,140/4,360 (620 ~ 4,140) / (620 ~ 4,360)	4,210/4,240 (620 ~ 4,210) / (620 ~ 4,240)
	Heating 47 ❄1		3,360 (520 ~ 3,600)	—	3,840 (520 ~ 4,100)	—
Power consumption	Heating 17 ❄2	W	2,620	—	3,000	—
EER ❄1 [SEER] ❄3	Cooling		8.0 [14.5]	9.1 [16.0]	7.7/7.6 [14.5]	7.9/8.2 [15.1]
HSPF IV(V) ❄4	Heating		8.2 (6.7)	—	8.2 (6.7)	—
COP	Heating ❄1		2.84	—	2.69	—
Outdoor unit model			**MUZ-D30NA**	**MUY-D30NA**	**MUZ-D36NA**	**MUY-D36NA**
Power supply V , phase , Hz			208/230 , 1 , 60			
Max. fuse size (time delay)		A	25			
Min. circuit ampacity		A	21			
Fan motor		F.L.A	0.93			
Compressor	Model		TNB220FMCHT			
		R.L.A	16			
		L.R.A	20			
	Refrigeration oil	cc	870 (NEO22)			
Refrigerant control			Linear expansion valve			
Sound level ❄1	Cooling	dB(A)	55	55	56	56
	Heating		57	—	57	—
Defrost method			Reverse cycle	—	Reverse cycle	—
Dimensions	W	in.	33-1/16			
	D		13			
	H		33-7/16			
Weight		lb.	141	126	141	126
External finish			Munsell 3Y 7.8/1.1			
Remote controller			Wireless type			
Control voltage (by built-in transformer)			12 - 24 VDC			
Refrigerant piping			Not supplied			
Refrigerant pipe size (Min. wall thickness)	Liquid	in.	3/8 (0.0315)			
	Gas		5/8 (0.0394)			
Connection method	Indoor		Flared			
	Outdoor					
Between the indoor & outdoor units	Height difference	ft.	50			
	Piping length		100			
Refrigerant charge (R410A)			4 lb. 10 oz.	4 lb.	4 lb. 10 oz.	4 lb.

NOTE: Test conditions are based on ARI 210/240.

❄1: Rating conditions (Cooling) — Indoor: 80˚FDB, 67˚FWB, Outdoor: 95˚FDB, (75˚FWB) Rated frequency
(Heating) — Indoor: 70˚FDB, 60˚FWB, Outdoor: 47˚FDB, 43˚FWB Rated frequency

❄2: (Heating) — Indoor: 70˚FDB, 60˚FWB, Outdoor: 17˚FDB, 15˚FWB Maximum frequency

Test condition

⁂3,⁂4

ARI	Mode	Test	Indoor air condition (°F)		Outdoor air condition (°F)	
			Dry bulb	Wet bulb	Dry bulb	Wet bulb
	SEER (Cooling)	"A" Cooling Steady State at rated compressor Speed	80	67	95	(75)
		"B-2" Cooling Steady State at rated compressor Speed	80	67	82	(65)
		"B-1" Cooling Steady State at minimum compressor Speed	80	67	82	(65)
		Low ambient Cooling Steady State at minimum compressor Speed	80	67	67	(53.5)
		Intermediate Cooling Steady State at Intermediate compressor Speed ⁂5	80	67	87	(69)
	HSPF (Heating)	Standard Rating-Heating at rated compressor Speed	70	60	47	43
		Low temperature Heating at rated compressor Speed	70	60	17	15
		Max temperature Heating at minimum compressor Speed	70	60	62	56.5
		High temperature Heating at minimum compressor Speed	70	60	47	43
		Frost Accumulation at rated compressor Speed	70	60	35	33
		Frost Accumulation at Intermediate compressor Speed ⁂5	70	60	35	33

⁂5: At Intermediate compressor Speed
=("Cooling rated compressor speed" - "minimum compressor speed") / 3 + "minimum compressor speed".

OPERATING RANGE

(1) POWER SUPPLY

	Rated voltage	Guaranteed voltage (V)
Outdoor unit	208/230 V 1 phase 60 Hz	Min. 187 — 208 — 230 — Max. 253

(2) OPERATION

Mode	Condition	Intake air temperature (°F)			
		Indoor		Outdoor	
		DB	WB	DB	WB
Cooling	Standard temperature	80	67	95	—
	Maximum temperature	90	73	115	—
	Minimum temperature	67	57	14	—
	Maximum humidity	78%		—	
Heating	Standard temperature	70	60	47	43
	Maximum temperature	80	67	75	65
	Minimum temperature	70	60	14	13

4 OUTLINES AND DIMENSIONS

MUZ-D30NA MUZ-D36NA MUY-D30NA MUY-D36NA

Unit: inch

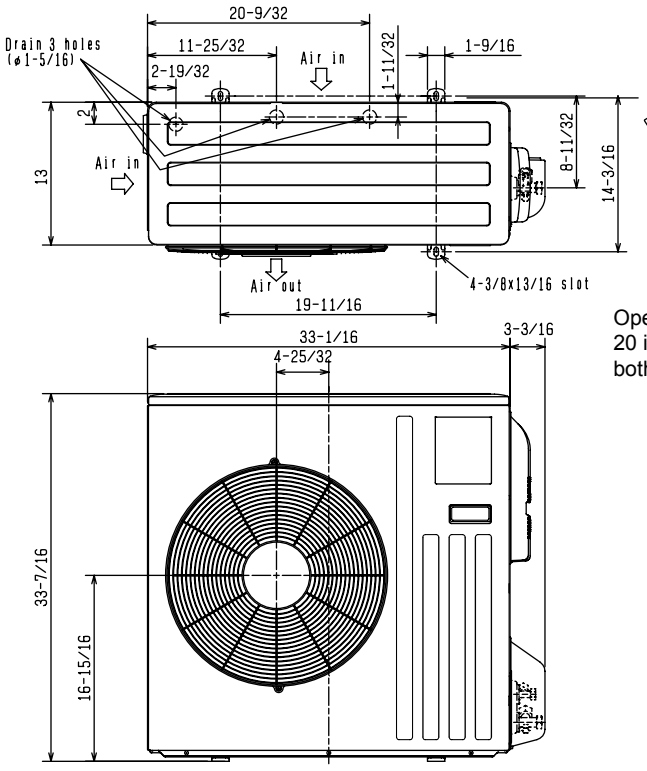

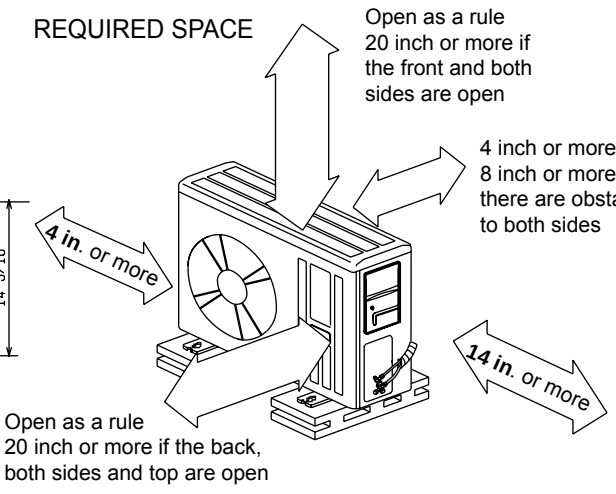

Open as a rule
20 inch or more if the back,
both sides and top are open

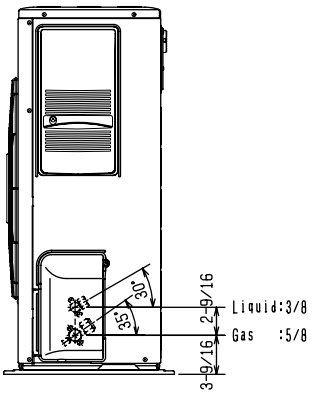

5 WIRING DIAGRAM

MUZ-D30NA MUZ-D30NA-U1 MUZ-D36NA MUZ-D36NA-U1

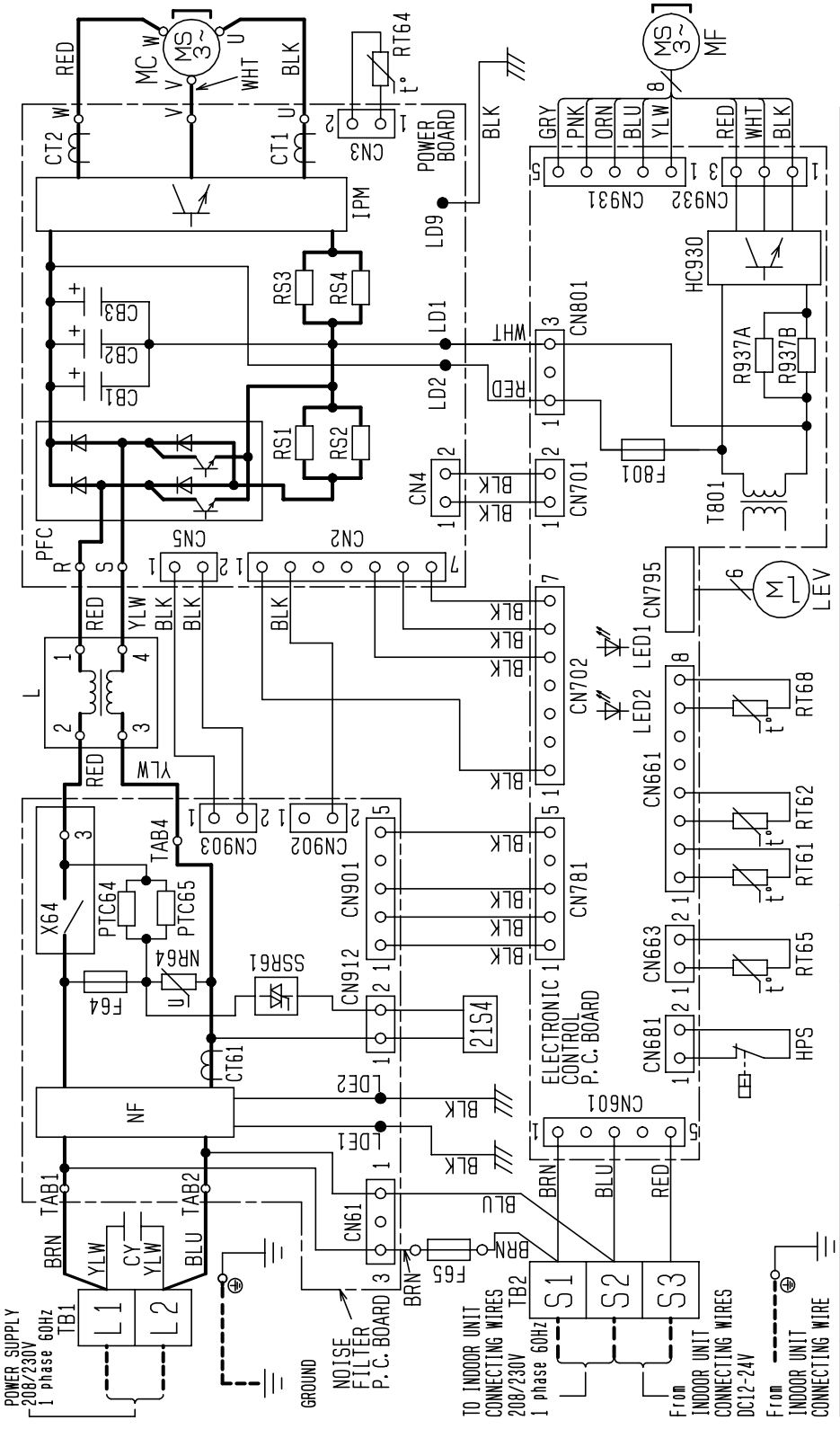

SYMBOL	NAME
CB1~3	SMOOTHING CAPACITOR
CT1,2	CURRENT TRANSFORMER
CT61	CURRENT TRANSFORMER
CY	CAPACITOR
F64	FUSE(T2AL250V)
F65	FUSE(T6.3AL250V)
F801	FUSE(T3.15AL250V)
HC930	INTELLIGENT POWER MODULE
HPS	HIGH PRESSURE SWITCH
IPM	INTELLIGENT POWER MODULE

SYMBOL	NAME
L	REACTOR
LEV	EXPANSION VALVE
MC	COMPRESSOR
MF	FAN MOTOR
NF	NOISE FILTER
NR64	VARISTOR
PFC	POWER FACTOR CONTROLLER
RS1~4	RESISTOR
RT61	DEFROST THERMISTOR
RT62	DISCHARGE TEMP. THERMISTOR

SYMBOL	NAME
RT64	FIN TEMP. THERMISTOR
RT65	AMBIENT TEMP. THERMISTOR
RT68	OUTDOOR HEAT EXCHANGER TEMP. THERMISTOR
PTC64, 65	RESISTOR
R937A, B	RESISTOR
SSR61	SOLENOID COIL RELAY
TB1, 2	TERMINAL BLOCK
T801	SWITCHING TRANSFORMER
X64	RELAY
21S4	REVERSING VALVE SOLENOID COIL

NOTES 1. About the indoor side electric wiring refer to the indoor unit electric wiring diagram for servicing.
2. Use copper conductors only(for field wiring).
3. Symbols below indicate.
□□ : Terminal block

MUZ-D30NA-1 MUZ-D30NA-U2 MUZ-D36NA-1 MUZ-D36NA-U2

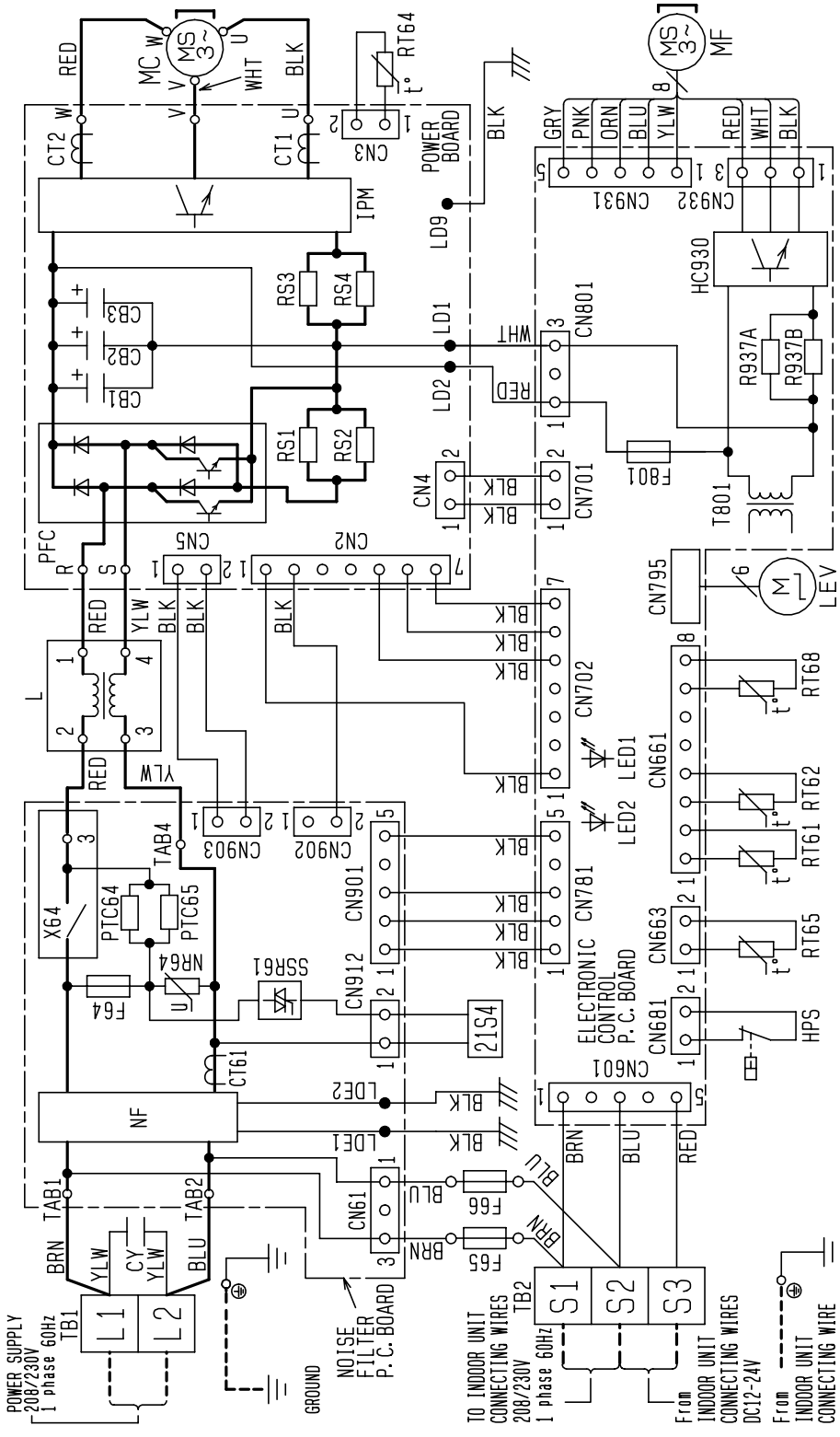

SYMBOL	NAME	SYMBOL	NAME	SYMBOL	NAME
CB1~3	SMOOTHING CAPACITOR	L	REACTOR	RT64	FIN TEMP.THERMISTOR
CT1,2	CURRENT TRANSFORMER	LEV	EXPANSION VALVE	RT65	AMBIENT TEMP.THERMISTOR
CT61	CURRENT TRANSFORMER	MC	COMPRESSOR	RT68	OUTDOOR HEAT EXCHANGER TEMP.THERMISTOR
CY	CAPACITOR	MF	FAN MOTOR	PTC64,65	RESISTOR
F64	FUSE(T2AL250V)	NF	NOISE FILTER	R937A,B	RESISTOR
F65,F66	FUSE(T6.3AL250V)	NR64	VARISTOR	SSR61	SOLENOID COIL RELAY
F801	FUSE(T3.15AL250V)	PFC	POWER FACTOR CONTROLLER	TB1,2	TERMINAL BLOCK
HC930	INTELLIGENT POWER MODULE	RS1~4	RESISTOR	T801	SWITCHING TRANSFORMER
HPS	HIGH PRESSURE SWITCH	RT61	DEFROST THERMISTOR	X64	RELAY
IPM	INTELLIGENT POWER MODULE	RT62	DISCHARGE TEMP.THERMISTOR	21S4	REVERSING VALVE SOLENOID COIL

NOTES 1. About the indoor side electric wiring refer to the indoor unit electric wiring diagram for servicing.
2. Use copper conductors only(for field wiring).
3. Symbols below indicate.
□□ :Terminal block

MUY-D30NA MUY-D36NA

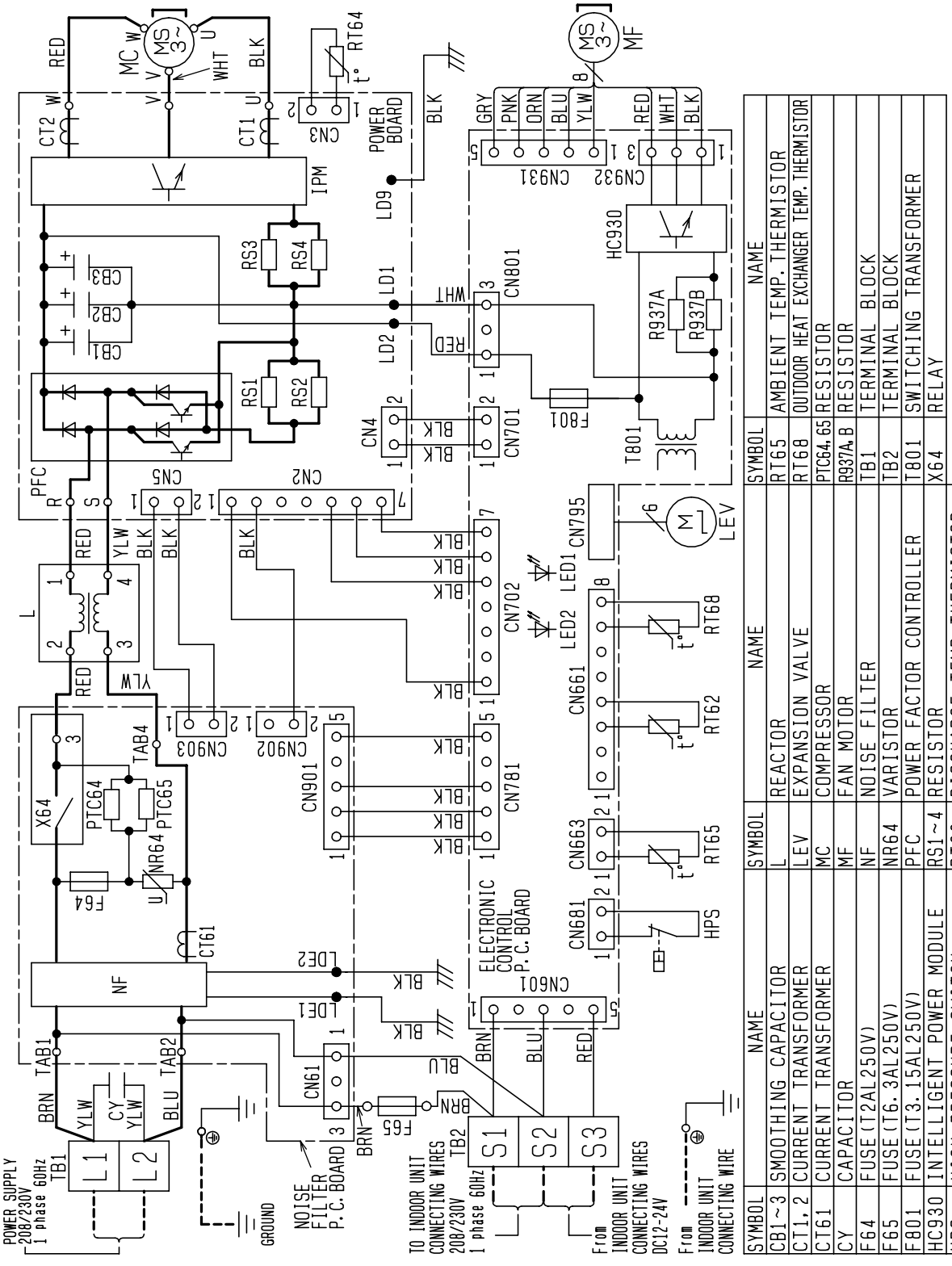

SYMBOL	NAME
CB1~3	SMOOTHING CAPACITOR
CT1, 2	CURRENT TRANSFORMER
CT61	CURRENT TRANSFORMER
CY	CAPACITOR
F64	FUSE (T2AL250V)
F65	FUSE (T6.3AL250V)
F801	FUSE (T3.15AL250V)
HC930	INTELLIGENT POWER MODULE
HPS	HIGH PRESSURE SWITCH
IPM	INTELLIGENT POWER MODULE

SYMBOL	NAME
L	REACTOR
LEV	EXPANSION VALVE
MC	COMPRESSOR
MF	FAN MOTOR
NF	NOISE FILTER
NR64	VARISTOR
PFC	POWER FACTOR CONTROLLER
RS1~4	RESISTOR
RT62	DISCHARGE TEMP. THERMISTOR
RT64	FIN TEMP. THERMISTOR

SYMBOL	NAME
RT65	AMBIENT TEMP. THERMISTOR
RT68	OUTDOOR HEAT EXCHANGER TEMP. THERMISTOR
PTC64, 65	RESISTOR
R937A, B	RESISTOR
TB1	TERMINAL BLOCK
TB2	TERMINAL BLOCK
T801	SWITCHING TRANSFORMER
X64	RELAY

NOTES 1. About the indoor side electric wiring refer to the indoor unit electric wiring diagram for servicing.
2. Use copper conductors only(for field wiring).
3. Symbols below indicate.
□□□ :Terminal block

MUY-D30NA-[1] MUY-D36NA-[1]

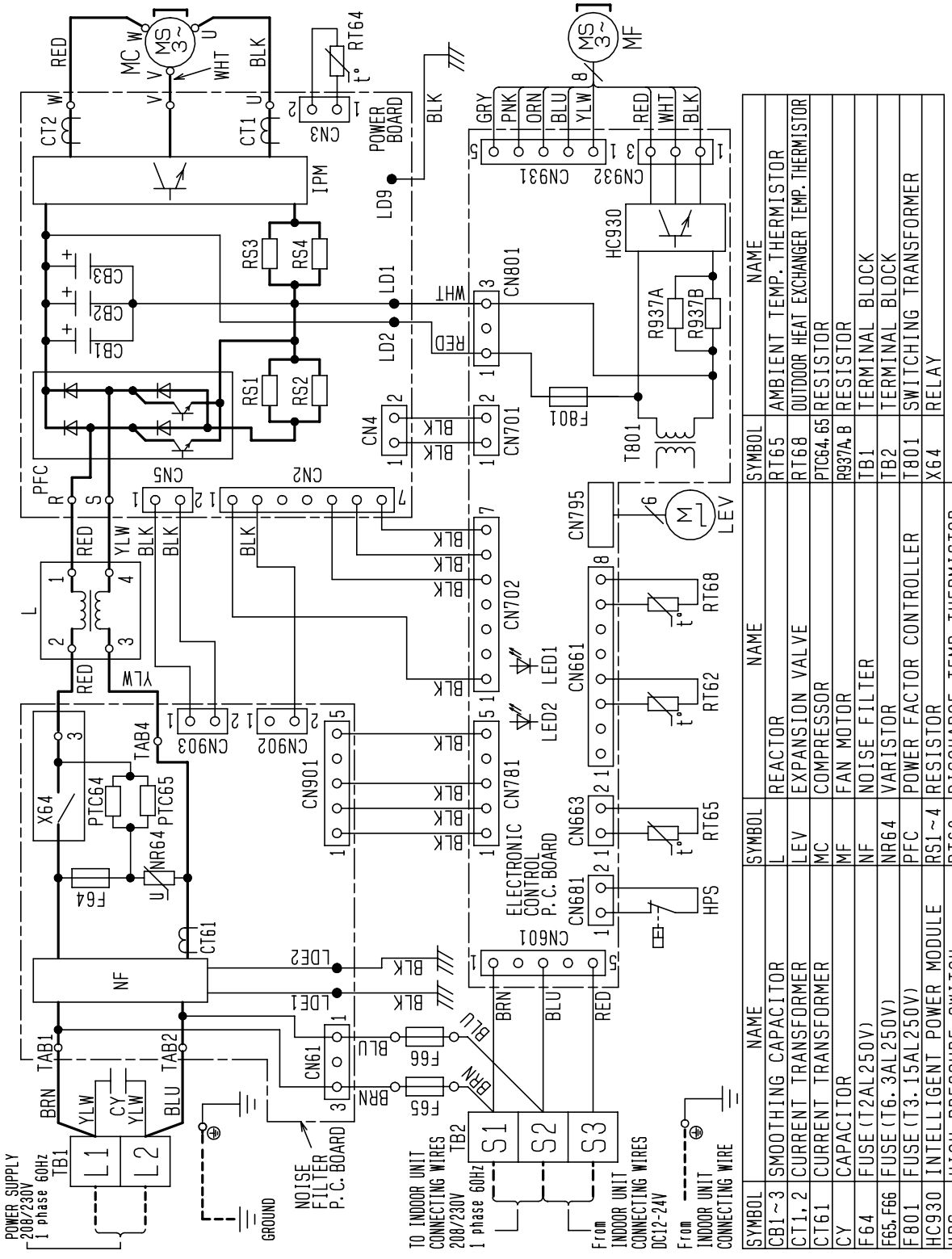

SYMBOL	NAME	SYMBOL	NAME	SYMBOL	NAME
CB1~3	SMOOTHING CAPACITOR	L	REACTOR	RT65	AMBIENT TEMP. THERMISTOR
CT1, 2	CURRENT TRANSFORMER	LEV	EXPANSION VALVE	RT68	OUTDOOR HEAT EXCHANGER TEMP. THERMISTOR
CT61	CURRENT TRANSFORMER	MC	COMPRESSOR	PTC64, 65	RESISTOR
CY	CAPACITOR	MF	FAN MOTOR	R937A, B	RESISTOR
F64	FUSE(T2AL250V)	NF	NOISE FILTER	TB1	TERMINAL BLOCK
F65, F66	FUSE(T6. 3AL250V)	NR64	VARISTOR	TB2	TERMINAL BLOCK
F801	FUSE(T3. 15AL250V)	PFC	POWER FACTOR CONTROLLER	T801	SWITCHING TRANSFORMER
HC930	INTELLIGENT POWER MODULE	RS1~4	RESISTOR	X64	RELAY
HPS	HIGH PRESSURE SWITCH	RT62	DISCHARGE TEMP. THERMISTOR		
IPM	INTELLIGENT POWER MODULE	RT64	FIN TEMP. THERMISTOR		

NOTES 1. About the indoor side electric wiring refer to the indoor unit electric wiring diagram for servicing.
2. Use copper conductors only(for field wiring).
3. Symbols below indicate.
□□ :Terminal block

6 REFRIGERANT SYSTEM DIAGRAM

MUZ-D30NA MUZ-D36NA

Unit: inch

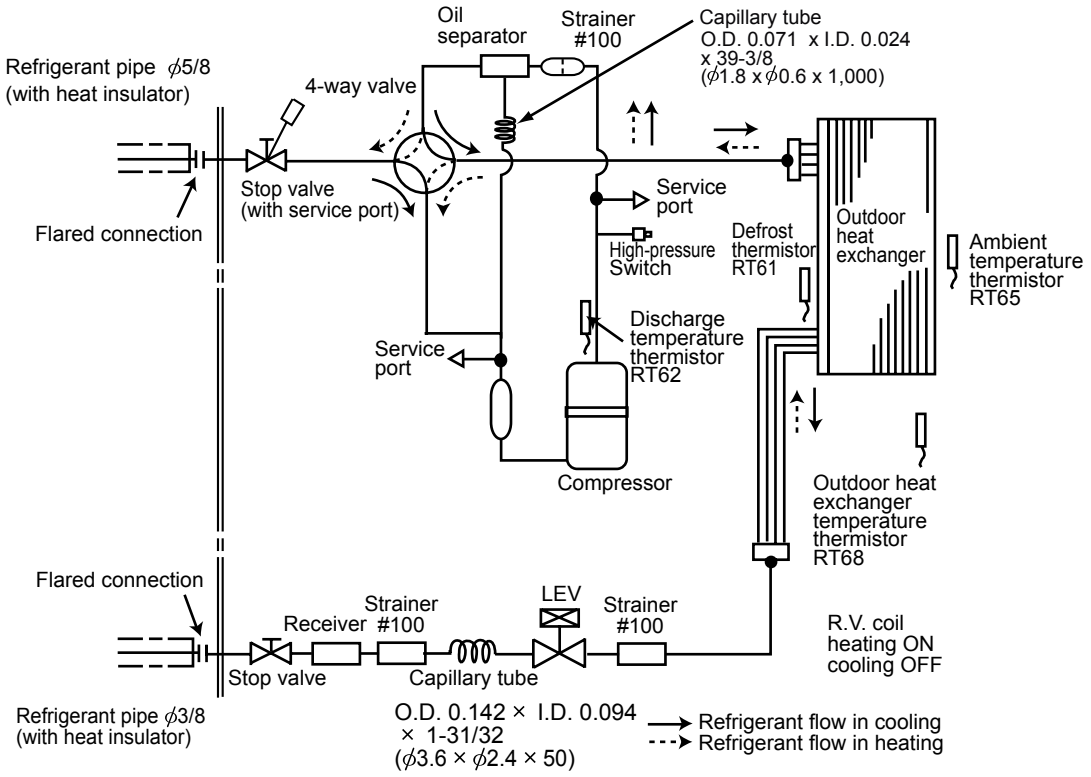

MUY-D30NA MUY-D36NA

Unit: inch

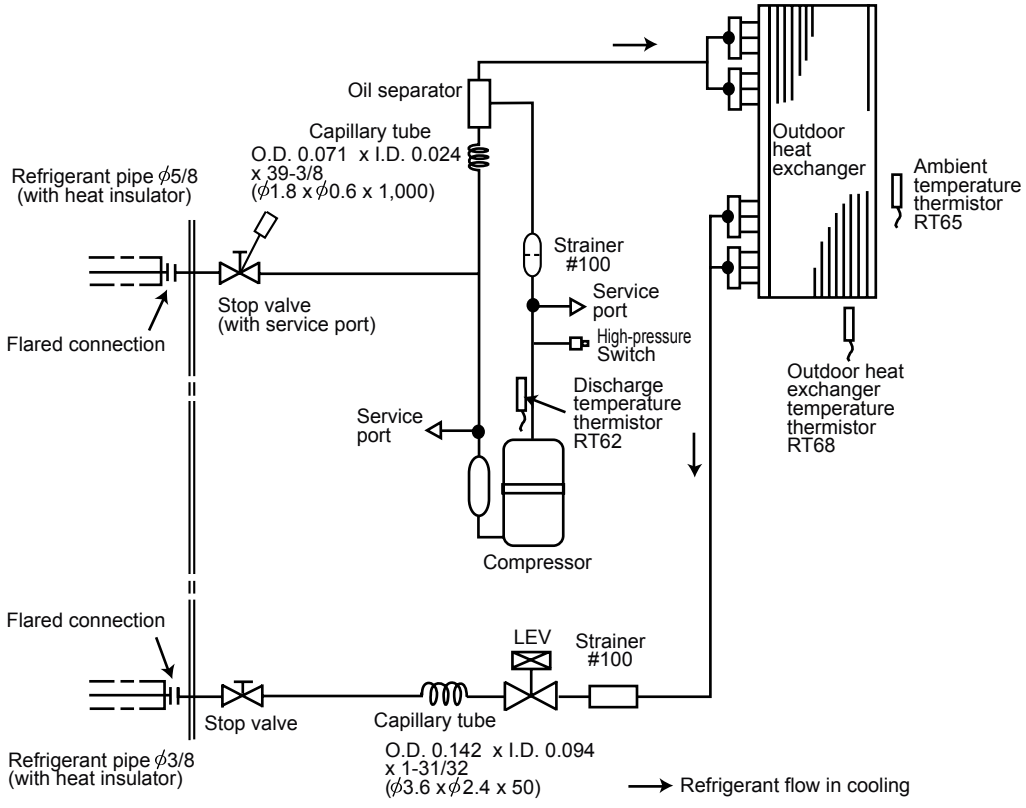

MAX. REFRIGERANT PIPING LENGTH and MAX. HEIGHT DIFFERENCE

Model	Refrigerant piping: ft.		Piping size O.D: in.	
	Max. Length A	Max. Height difference B	Gas	Liquid
MUZ-D30NA **MUZ-D36NA** **MUY-D30NA** **MUY-D36NA**	100	50	5/8	3/8

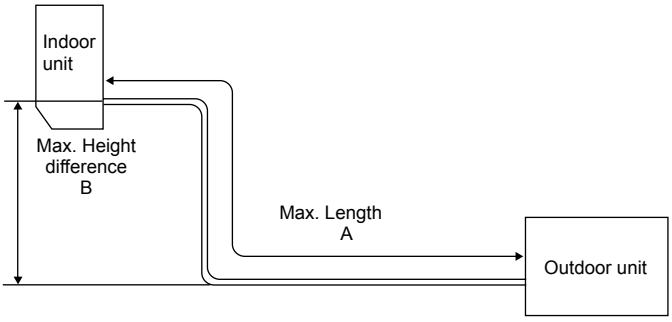

ADDITIONAL REFRIGERANT CHARGE (R410A: oz.)

Refrigerant piping exceeding 25 ft. requires additional refrigerant charge according to the calculation.

Model	Outdoor unit precharged	Refrigerant piping length (one way): ft.								
		25	30	40	50	60	70	80	90	100
MUZ-D30NA **MUZ-D36NA**	4 lb. 10 oz.	0	2.96	8.88	14.80	20.72	26.64	32.56	38.48	44.40

Calculation: X oz. = 2.96/5 oz. / ft. × (Refrigerant piping length (ft.) - 25)

Model	Outdoor unit precharged	Refrigerant piping length (one way): ft.								
		25	30	40	50	60	70	80	90	100
MUY-D30NA **MUY-D36NA**	4 lb.	0	1.08	3.24	5.40	7.56	9.72	11.88	14.04	16.20

Calculation: X oz. = 1.08/5 oz. / ft. × (Refrigerant piping length (ft.) - 25)

NOTE: Refrigerant piping exceeding 25 ft. requires additional refrigerant charge according to the calculation.

7 DATA

MUZ-D30NA MUZ-D36NA MUY-D30NA MUY-D36NA

7-1. PERFORMANCE DATA

1) COOLING CAPACITY

Model	Indoor air IWB (˚F)	Outdoor intake air DB temperature (˚F)														
		75			85			95			105			115		
		TC	SHC	TPC	TC	SHC	TPC	TC	SHC	TPC	TC	SHC	TPC	TC	SHC	TPC
MUZ-D30NA	71	37.6	19.1	3.43	35.2	17.8	3.75	33.0	16.7	4.04	30.7	15.6	4.25	28.2	14.3	4.43
	67	35.6	22.8	3.23	33.2	21.2	3.56	30.7	19.6	3.85	28.6	18.3	4.08	26.2	16.8	4.27
	63	33.5	25.9	3.08	31.0	24.0	3.41	28.9	22.3	3.68	26.2	20.3	3.93	23.9	18.5	4.08
MUZ-D36NA	71	40.7	19.8	3.88	38.0	18.5	4.25	35.7	17.4	4.58	33.2	16.2	4.82	30.5	14.9	5.01
	67	38.5	23.9	3.66	35.9	22.2	4.03	33.2	20.6	4.36	30.9	19.1	4.62	28.4	17.6	4.84
	63	36.2	27.3	3.49	33.5	25.3	3.86	31.2	23.5	4.16	28.4	21.4	4.45	25.9	19.5	4.62
MUY-D30NA	71	37.6	19.1	3.01	35.2	17.8	3.30	33.0	16.7	3.55	30.7	15.6	3.73	28.2	14.3	3.89
	67	35.6	22.8	2.84	33.2	21.2	3.13	30.7	19.6	3.38	28.6	18.3	3.58	26.2	16.8	3.75
	63	33.5	25.9	2.70	31.0	24.0	2.99	28.9	22.3	3.23	26.2	20.3	3.45	23.9	18.5	3.58
MUY-D36NA (208 V)	71	40.7	19.8	3.75	38.0	18.5	4.10	35.7	17.4	4.42	33.2	16.2	4.65	30.5	14.9	4.84
	67	38.5	23.9	3.54	35.9	22.2	3.89	33.2	20.6	4.21	30.9	19.1	4.46	28.4	17.6	4.67
	63	36.2	27.3	3.37	33.5	25.3	3.73	31.2	23.5	4.02	28.4	21.4	4.29	25.9	19.5	4.46
MUY-D36NA (230 V)	71	42.4	20.6	3.77	39.6	19.3	4.13	37.2	18.1	4.45	34.6	16.8	4.69	31.8	15.5	4.88
	67	40.1	24.9	3.56	37.4	23.2	3.92	34.6	21.5	4.24	32.2	20.0	4.49	29.6	18.3	4.71
	63	37.7	28.4	3.39	34.9	26.3	3.75	32.5	24.5	4.05	29.6	22.3	4.32	27.0	20.3	4.49

NOTE: 1. IWB : Intake air wet-bulb temperature
TC : Total Capacity (x10^3 Btu/h)
SHC : Sensible Heat Capacity (x10^3 Btu/h)
TPC : Total Power Consumption (kW)
2. SHC is based on 80˚F of indoor Intake air DB temperature.

2) COOLING CAPACITY CORRECTIONS

	Refrigerant piping length (one way: ft.)			
	25 (std.)	40	65	100
MUZ-D30NA MUZ-D36NA MUY-D30NA MUY-D36NA	1.0	0.95	0.878	0.713

3) HEATING CAPACITY

Model	Indoor air IDB (˚F)	Outdoor intake air WB temperature (˚F)											
		15		25		35		43		45		55	
		TC	TPC	TC	TPC	TC	TPC	TC	TPC	TC	TPC	TC	TPC
MUZ-D30NA	75	18.9	2.50	23.6	2.94	28.2	3.28	31.8	3.44	32.8	3.49	37.2	3.63
	70	20.0	2.42	24.5	2.87	28.9	3.19	32.6	3.36	33.6	3.43	38.0	3.56
	65	20.5	2.32	25.6	2.77	29.8	3.11	33.6	3.28	34.6	3.33	38.8	3.49
MUZ-D36NA	75	20.4	2.86	25.5	3.36	30.4	3.74	34.3	3.94	35.4	3.99	40.1	4.15
	70	21.6	2.76	26.4	3.28	31.2	3.65	35.2	3.84	36.3	3.92	41.0	4.07
	65	22.2	2.65	27.6	3.17	32.2	3.55	36.3	3.74	37.3	3.80	41.9	3.99

NOTE: 1. IDB: Intake air dry-bulb temperature
TC : Total Capacity (x10^3 Btu/h)
TPC : Total Power Consumption (kW)
2. Above data is for heating operation without any frost.

How to operate with fixed operational frequency of the compressor.

1. Press the EMERGENCY OPERATION switch on the front of the indoor unit, and select either EMERGENCY COOL mode or EMERGENCY HEAT mode before starting to operate the air conditioner.
2. The compressor starts with operational frequency.
3. The fan speed of the indoor unit is High.
4. This operation continues for 30 minutes.
5. In order to release this operation, press the EMERGENCY OPERATION switch twice or once, or press any button on the remote controller.

7-2. PERFORMANCE CURVE

Cooling

MUZ-D30NA

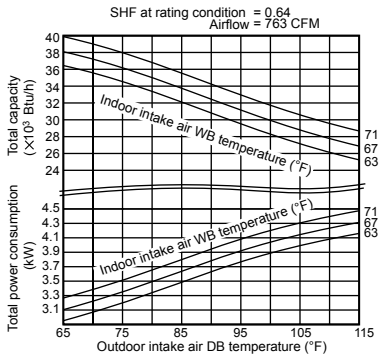

MUZ-D36NA

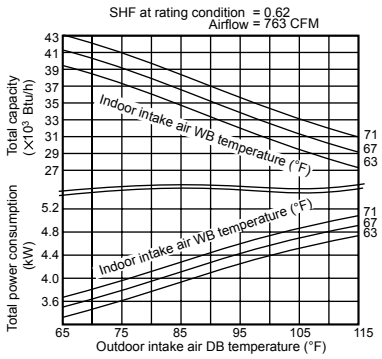

MUY-D30NA

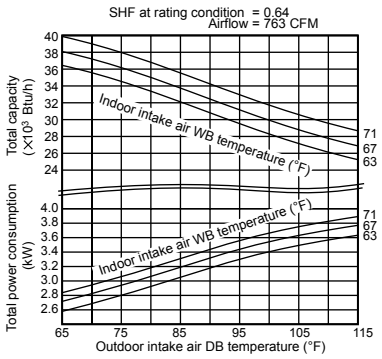

MUY-D36NA

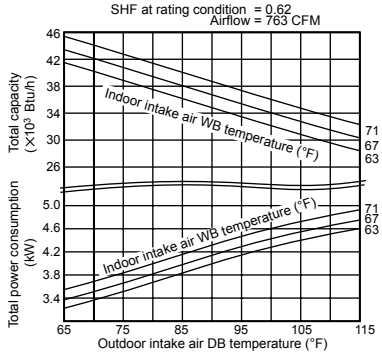

Heating

MUZ-D30NA

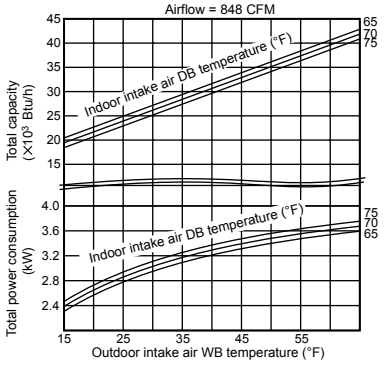

MUZ-D36NA

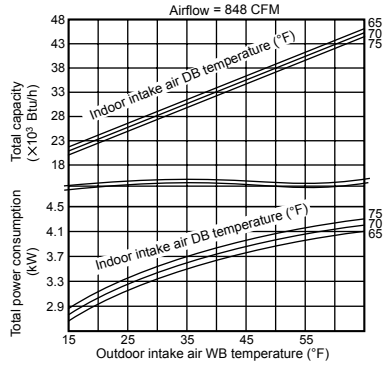

This value of frequency is not the same as the actual frequency in operating. Refer to 7-5 and 7-6 for the relationships between frequency and capacity.

7-3. CONDENSING PRESSURE

Cooling

Data is based on the condition of indoor humidity 50%.
Air flow should be set to High speed.

MUZ-D30NA

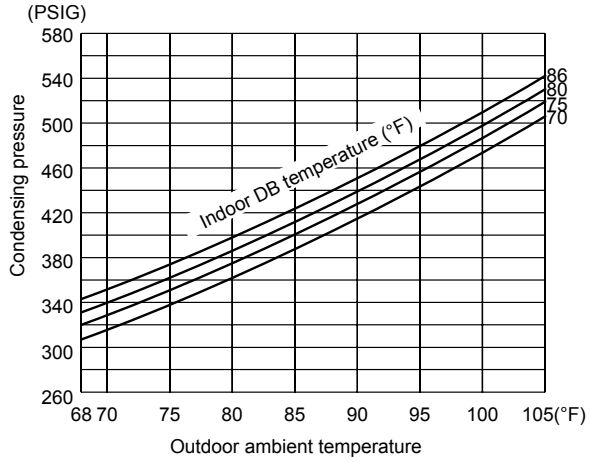

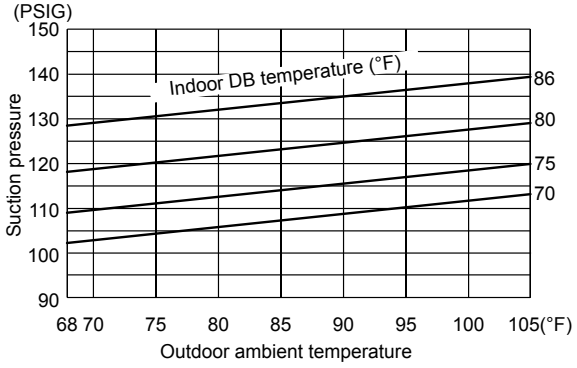

MUZ-D36NA

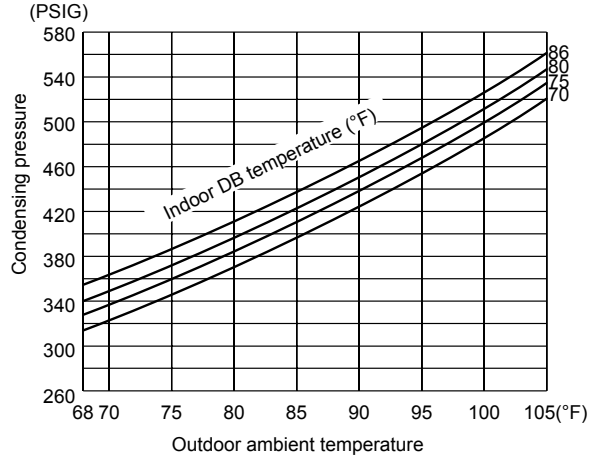

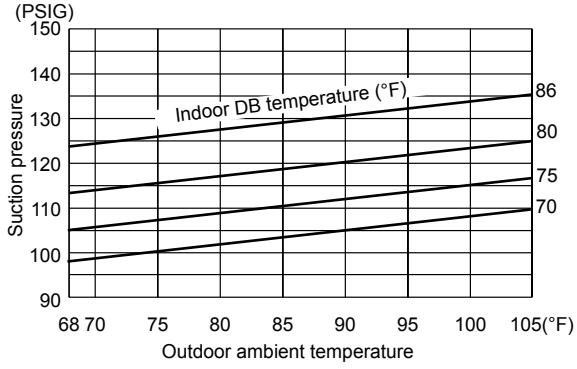

MUY-D30NA

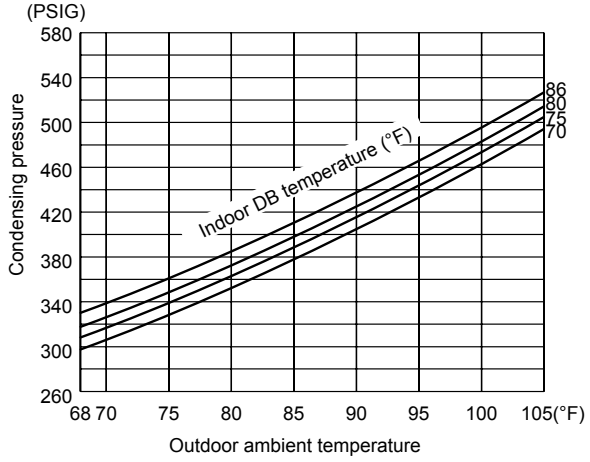

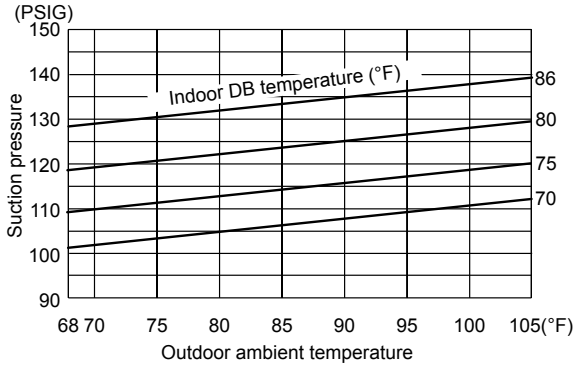

MUY-D36NA

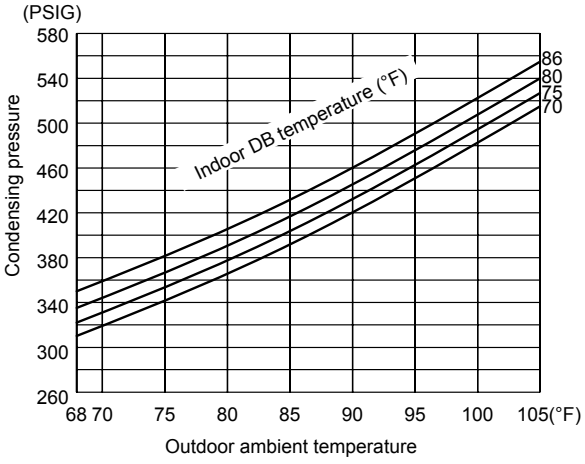

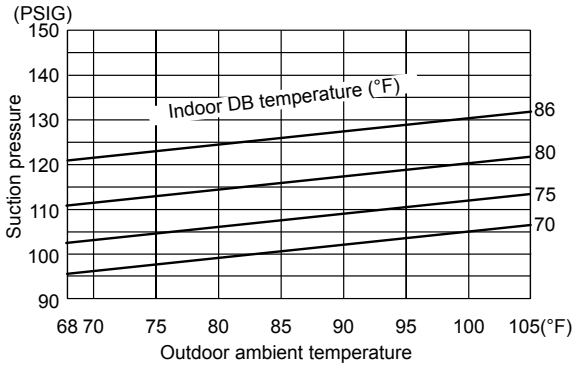

Heating

Data is based on the condition of outdoor humidity 75%.
Air flow should be set to High speed.
Data is for heating operation without any frost.

MUZ-D30NA

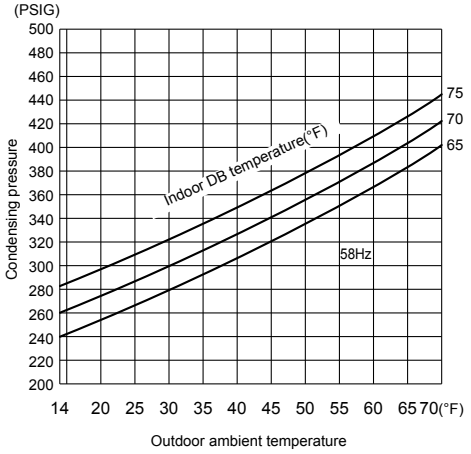

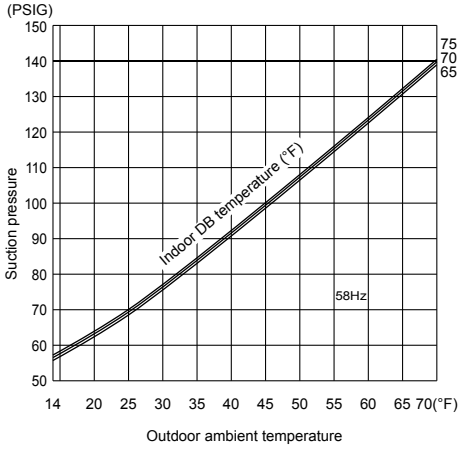

MUZ-D36NA

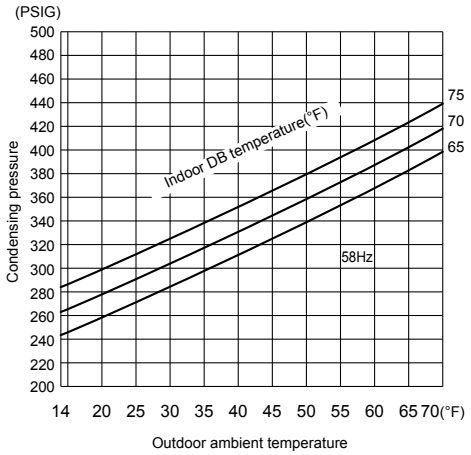

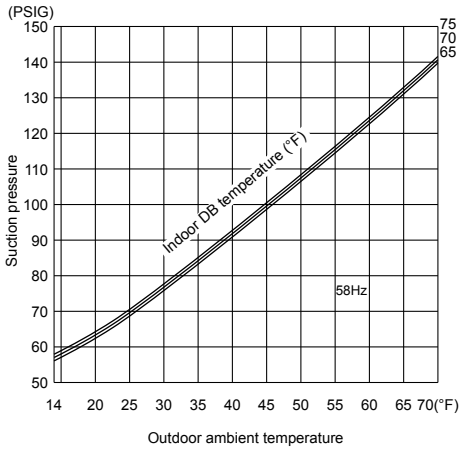

7-4. STANDARD OPERATION DATA

Model				MSZ-D30NA		MSZ-D36NA		MSY-D30NA	MSY-D36NA
Item			Unit	Cooling	Heating	Cooling	Heating	Cooling	Cooling
Total	Capacity		Btu/h	30,700	32,600	32,000/33,200	35,200	30,700	33,200/34,000
	SHF		—	0.64	—	0.62	—	0.64	0.62
	Input		kW	3.85	3.36	4.14/4.36	3.84	3.38	4.21/4.24
	Rated frequency		Hz	84	84	91	91	79	92
Electrical circuit	Indoor unit			MSZ-D30NA		MSZ-D36NA		MSY-D30NA	MSY-D36NA
	Power supply		V, phase, Hz	208/230 , 1 , 60					
	Input		kW	0.058					
	Fan motor current		A	0.45/0.42					
	Outdoor unit			MUZ-D30NA		MUZ-D36NA		MUY-D30NA	MUY-D36NA
	Power supply		V, phase, Hz	208/230 , 1 , 60					
	Input		kW	3.792	3.302	4.082/4.302	3.782	3.322	4.152/4.182
	Comp. current		A	17.25/15.56	14.95/13.46	18.65/17.86	17.25/15.56	15.05/13.56	18.95/17.26
	Fan motor current		A	0.80/0.72					
Refrigerant circuit	Condensing pressure		PSIG	468	404	480	420	453	475
	Suction pressure		PSIG	126	96	122	94	125	119
	Discharge temperature		˚F	186.8	169.7	198.7	168.8	191.3	197.1
	Condensing temperature		˚F	126.5	114.3	128.5	117.0	123.8	127.4
	Suction temperature		˚F	45.5	29.8	48.0	29.1	54.7	48.6
	Comp. shell bottom temperature		˚F	175.6	156.4	187.0	155.7	177.4	182.7
	Ref. pipe length		ft.	25					
	Refrigerant charge (R410A)		—	4 lb. 10 oz.				4 lb.	
Indoor unit	Intake air temperature	DB	˚F	80	70	80	70	80	80
		WB	˚F	67	60	67	60	67	67
	Discharge air temperature	DB	˚F	53.9	112.2	53	114.9	53.7	51.7
		WB	˚F	53	73.9	52.1	74.6	52.8	50.8
	Fan speed (High)		rpm	1,100					
	Airflow (High)		CFM	741 (Wet)	795	738 (Wet)	794	718 (Wet)	710 (Wet)
Outdoor unit	Intake air temperature	DB	˚F	95	47	95	47	95	95
		WB	˚F	—	43	—	43	—	—
	Fan speed		rpm	800					
	Airflow		CFM	1,941					

7-5. CAPACITY AND INPUT CORRECTION BY INVERTER OUTPUT FREQUENCY

MUZ-D30NA

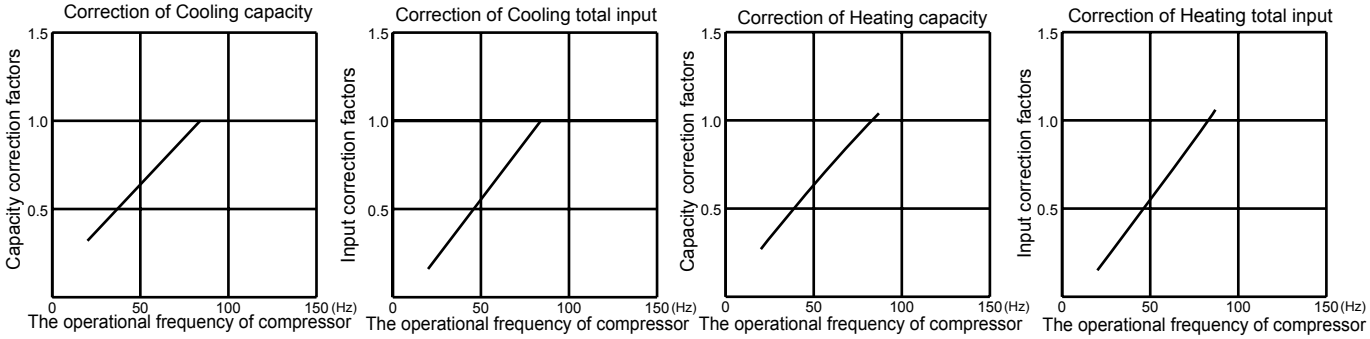

MUZ-D36NA

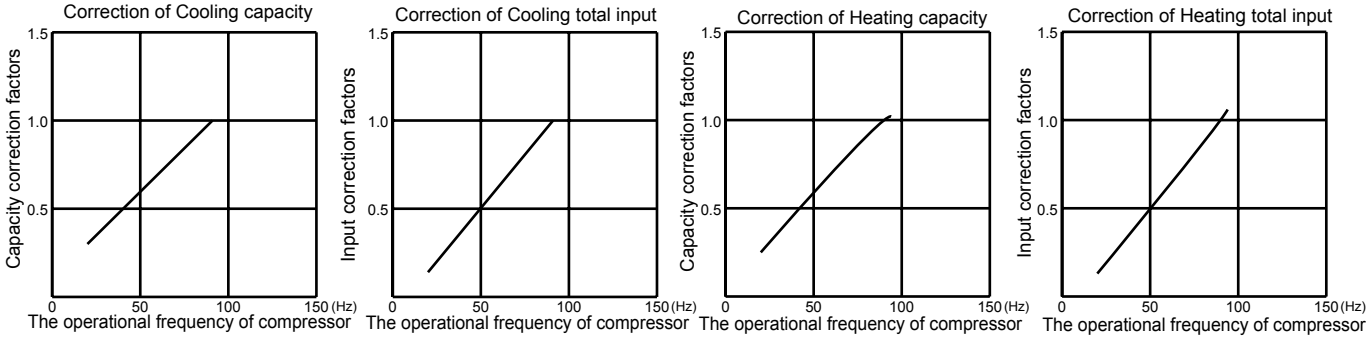

MUY-D30NA

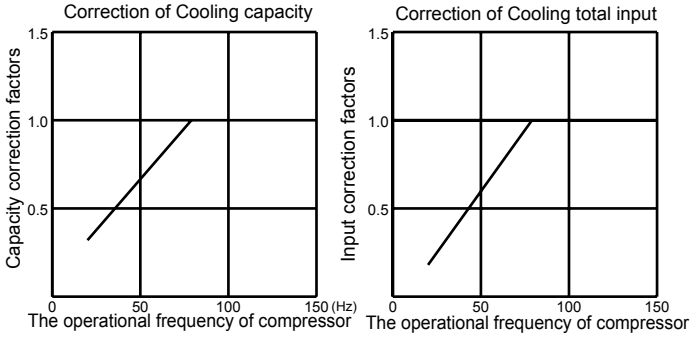

MUY-D36NA

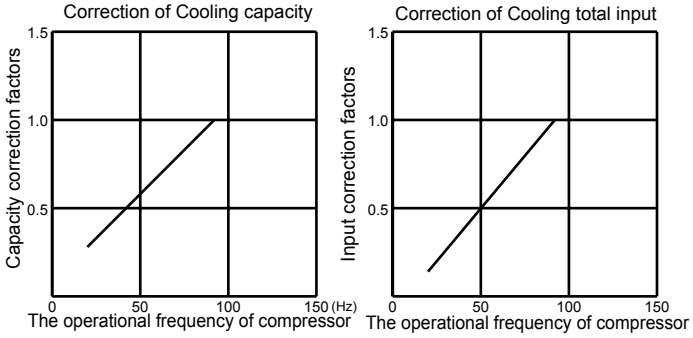

7-6. TEST RUN OPERATION (How to operate fixed-frequency operation)

1. Press EMERGENCY OPERATION switch to COOL or HEAT mode (COOL: Press once, HEAT: Press twice).
2. Test run operation starts and continues to operate for 30 minutes.
3. Compressor operates at rated frequency in COOL mode or 58 Hz in HEAT mode.
4. Indoor fan operates at High speed.
5. After 30 minutes, test run operation finishes and EMERGENCY OPERATION starts (Operation frequency of compressor varies).
6. To cancel test run operation (EMERGENCY OPERATION), press EMERGENCY OPERATION switch or any button on remote controller.

8 ACTUATOR CONTROL

MUZ-D30NA MUZ-D36NA MUY-D30NA MUY-D36NA

8-1. OUTDOOR FAN MOTOR CONTROL

The fan motor turns ON/OFF, interlocking with the compressor.
[ON] The fan motor turns ON 5 seconds before the compressor starts up.
[OFF] The fan motor turns OFF 15 seconds after the compressor has stopped running.

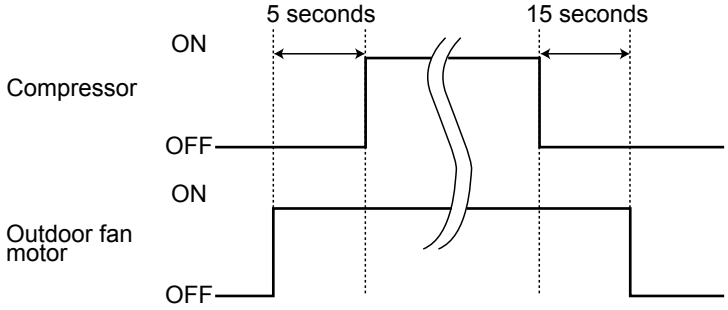

8-2. R.V. COIL CONTROL

<MUZ>

Heating · · · · · · · · · · · · · · · · · · ON
Cooling · · · · · · · · · · · · · · · · · · OFF
Dry · OFF

NOTE: The 4-way valve reverses for 5 seconds right before start-up of the compressor.

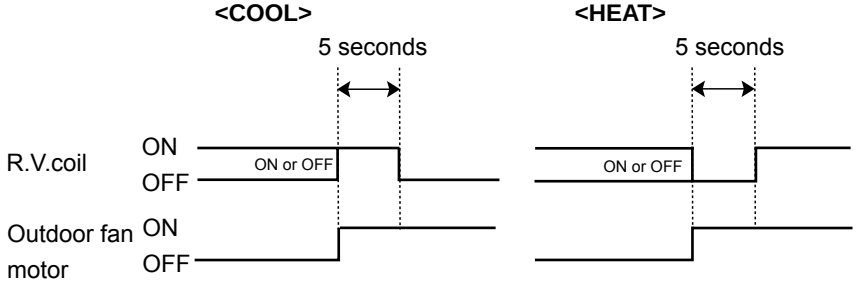

8-3. Relation between main sensor and actuator

Sensor	Purpose	Actuator				
		Compressor	LEV	Outdoor fan motor	R.V. coil	Indoor fan motor
Discharge temperature thermistor	Protection	○	○			
Indoor coil temperature thermistor	Cooling: Coil frost prevention	○				
	Heating: High pressure protection	○	○	○		
Defrost thermistor	Defrosting	○	○	○	○	○
Fin temperature thermistor	Protection	○		○		
Outdoor heat exchanger temperature	Protection	○	○	○		
Ambient temperature thermistor	Cooling: Low ambient temperature operation	○	○	○		

9 SERVICE FUNCTIONS

MUZ-D30NA MUZ-D36NA MUY-D30NA MUY-D36NA

9-1. PRE-HEAT CONTROL

If moisture gets into the refrigerant cycle, or when refrigerant is liquefied and collected in the compressor, it may interfere the start-up of the compressor.
To improve start-up condition, the compressor is energized even while it is not operating.
This is to generate heat at the winding.
The compressor uses about 50 W when pre-heat control is turned ON.
Pre-heat control is OFF at initial setting.

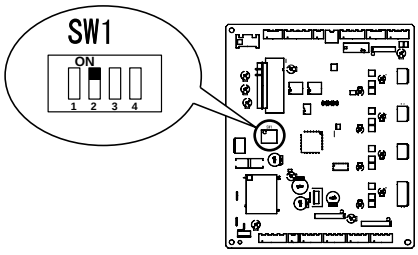

[How to activate pre-heat control]

1. Turn OFF the power supply for the air conditioner before making the setting.
2. Set the 2nd Dip Switch of SW1 on the outdoor electronic control P.C. board to ON to activate pre-heat control function.

9-2. CHANGE IN DEFROST SETTING

Changing defrost finish temperature

1. Turn OFF the power supply for the air conditioner before making the setting.
2. Set the 4th Dip Switch of SW1 on the outdoor electronic control P.C. board to ON to change the defrost finish temperature. (Refer to 10-6-1.)

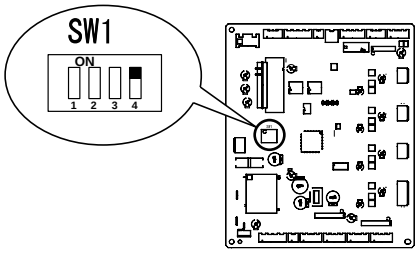

4th Dip Switch of SW1	Defrost finish temperature
OFF (Initial setting)	49.5°F (9.7°C)
ON	64.9°F (18.3°C)

10 TROUBLESHOOTING

MUZ-D30NA MUZ-D36NA MUY-D30NA MUY-D36NA

10-1. CAUTIONS ON TROUBLESHOOTING

1. Before troubleshooting, check the following

1) Check the power supply voltage.
2) Check the indoor/outdoor connecting wire for miswiring.

2. Take care of the following during servicing

1) Before servicing the air conditioner, be sure to turn OFF the main unit first with the remote controller, then after confirming the horizontal vane is closed, turn off the breaker and/or disconnect the power plug.
2) Be sure to turn OFF the power supply before removing the front panel, the cabinet, the top panel, and the electronic control P.C. board.
3) When removing the electrical parts, be careful of the residual voltage of smoothing capacitor.
4) When removing the electronic control P.C. board, hold the edge of the board with care NOT to apply stress on the components.
5) When connecting or disconnecting the connectors, hold the housing of the connector. DO NOT pull the lead wires.

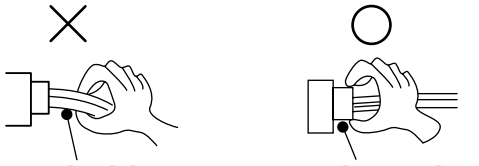

3. Troubleshooting procedure

1) First, check if the OPERATION INDICATOR lamp on the indoor unit is flashing on and off to indicate an abnormality. To make sure, check how many times the abnormality indication is flashing on and off before starting service work.
2) Before servicing check that the connector and terminal are connected properly.
3) When the electronic control P.C. board seems to be defective, check the copper foil pattern for disconnection and the components for bursting and discoloration.
4) Refer to 10-2. and 10-3.

10-2. FAILURE MODE RECALL FUNCTION

Outline of the function

This air conditioner can memorize the abnormal condition which has occurred once.

Even though LED indication listed on the troubleshooting check table (10-3.) disappears, the memorized failure details can be recalled.

1. Flow chart of failure mode recall function for the indoor/outdoor unit

Operational procedure

The cause of abnormality cannot be found because the abnormality does not recur.

Setting up the failure mode recall function

Turn ON the power supply.
<Preparation of the remote controller>
① While pressing both OPERATION SELECT button and TOO COOL button on the remote controller at the same time, press RESET button.
② First, release RESET button.
And release the other two buttons after all LCD in operation display section of the remote controller is displayed after 3 seconds.

Press OPERATE/STOP (ON/OFF) button of the remote controller (the set temperature is displayed) with the remote controller headed towards the indoor unit. ※1

Does the left lamp of OPERATION INDICATOR lamp on the indoor unit blink at the interval of 0.5 seconds?
Blinks: Either indoor or outdoor unit is abnormal. Beep is emitted at the same timing as the blinking of the left lamp of OPERATION INDICATOR lamp. ※2

No (OFF) → Indoor unit is normal.
But the outdoor unit might be abnormal because there are some abnormalities that cannot be recalled with this way.
Confirm if outdoor unit is abnormal according to the detailed outdoor unit failure mode recall function. (Refer to 10-2.2)

Yes (Blinks)

Judgment of indoor/outdoor abnormality

Before blinking, does the left lamp of OPERATION INDICATOR lamp stay ON for 3 seconds?
Stays ON for 3 seconds (without beep): The outdoor unit is abnormal.

Yes → The outdoor unit is abnormal.
Check the blinking pattern, and confirm the abnormal point with the outdoor unit failure mode table. (Refer to 10-2.3)
Make sure to check at least two consecutive blinking cycles. ※3

No → The indoor unit is abnormal.
Check the blinking pattern, and confirm the abnormal point with the indoor unit failure mode table. (Refer to indoor unit service manual.)
Make sure to check at least two consecutive blinking cycles. ※2

Releasing the failure mode recall function

Release the failure mode recall function by the following procedures.
Turn OFF the power supply and turn it ON again.
Press RESET button of the remote controller.

Repair the defective parts.

Deleting the memorized abnormal condition

① After repairing the unit, recall the failure mode again according to "Setting up the failure mode recall function" mentioned above.
② Press OPERATE/STOP (ON/OFF) button of the remote controller (the set temperature is displayed) with the remote controller headed towards the indoor unit.
③ Press EMERGENCY OPERATION switch so that the memorized abnormal condition is deleted.
④ Release the failure mode recall function according to "Releasing the failure mode recall function" mentioned above.

This figures show about MSZ type.

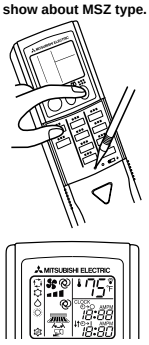

※1. Regardless of normal or abnormal condition, a short beep is emitted once the signal is received.

NOTE: 1. Make sure to release the failure mode recall function once it is set up, otherwise the unit cannot operate properly.
2. If the abnormal condition is not deleted from the memory, the last abnormal condition is kept memorized.

※2. Blinking pattern when the indoor unit is abnormal:

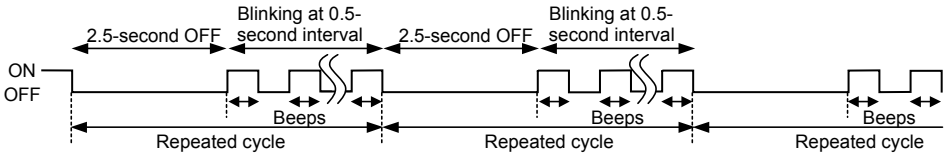

※3.Blinking pattern when the outdoor unit is abnormal:

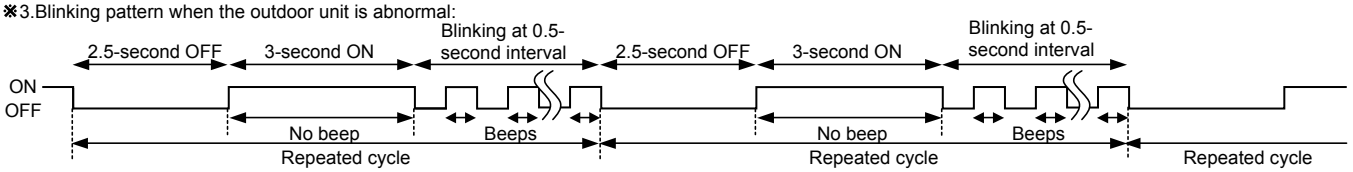

2. Flow chart of the detailed outdoor unit failure mode recall function

Operational procedure

The outdoor unit might be abnormal.
Confirm if outdoor unit is abnormal according to the following procedures.

↓

Confirm that the remote controller is in the failure mode recall function.

↓

With the remote controller headed towards the indoor unit, press TOO COOL or TOO WARM button to adjust the set temperature to 77˚F (25˚C). ※1

※1. Regardless of normal or abnormal condition, 2 short beeps are emitted as the signal is received.

↓

Does left lamp of OPERATION INDICATOR lamp on the indoor unit blink at the interval of 0.5 seconds?
Blinks: The outdoor unit is abnormal. Beep is emitted at the same timing as the blinking of the left lamp of OPERATION INDICATOR lamp. ※2

No (OFF) → The outdoor unit is normal.

Yes (Blinks)

↓

The outdoor unit is abnormal.
Check the blinking pattern, and confirm the abnormal point with the outdoor unit failure mode table. (10-2.3.)
Make sure to check at least two consecutive blinking cycles. ※2

↓

Releasing the failure mode recall function

Release the failure mode recall function by the following procedures.
Turn OFF the power supply and turn it ON again.
Press RESET button of the remote controller.

Release the failure mode recall function according to the left mentioned procedure.

↓

Repair the defective parts.

↓

Deleting the memorized abnormal condition

① After repairing the unit, recall the failure mode again according to "Setting up the failure mode recall function" (10-2.1.).
② Press OPERATE/STOP (ON/OFF) button of the remote controller (the set temperature is displayed) with the remote controller headed towards the indoor unit.
③ Press EMERGENCY OPERATION switch so that the memorized abnormal condition is deleted.
④ Release the failure mode recall function according to "Releasing the failure mode recall function" mentioned above.

NOTE: 1. Make sure to release the failure mode recall function once it is set up, otherwise the unit cannot operate properly.
2. If the abnormal condition is not deleted from the memory, the last abnormal condition is kept memorized.

※2.Blinking pattern when outdoor unit is abnormal:

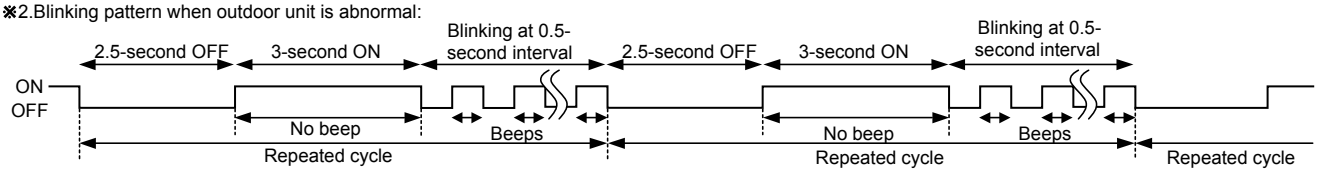

3. Outdoor unit failure mode table

MUZ-D30NA MUZ-D36NA MUY-D30NA MUY-D36NA

The left lamp of OPERATION INDICATOR lamp (Indoor unit)	Abnormal point (Failure mode / protection)	LED indication (Outdoor P.C. board)		Condition	Correspondence	Indoor/outdoor unit failure mode recall function
		LED 1	LED 2			
OFF	Non (Normal)	Lighting	Lighting	—	—	—
2-time flash	Outdoor power system	Lighting	Lighting	IPM protection stop or lock protection stop is continuously performed 3 times within 1 minute after the compressor gets started, or converter protection stop or bus-bar voltage protection stop is continuously performed 3 times within 3 minutes after start-up.	• Check the connection of the compressor connecting wire. • Refer to 10-5.Ⓐ "How to check inverter/compressor". • Refer to 10-5.Ⓕ "Check of compressor start failure". • Check the stop valve.	○
3-time flash	Discharge temperature thermistor	Lighting	Once	Thermistor shorts or opens during compressor running.	• Refer to 10-5.Ⓑ "Check of outdoor thermistors".	○
	Defrost thermistor (MUZ)	Lighting	Once			
	Ambient temperature thermistor	Lighting	Twice			
	Fin temperature thermistor	Lighting	3 times			
	P.C. board temperature thermistor	Lighting	4 times		• Replace the outdoor electronic control P.C. board.	
	Outdoor heat exchanger temperature thermistor	Lighting	9 times		• Refer to 10-5.Ⓑ "Check of outdoor thermistors".	
4-time flash	Overcurrent	Once	Goes out	28 A current flow into intelligent power module.	• Reconnect compressor connector. • Refer to 10-5.Ⓐ "How to check inverter/compressor." • Refer to 10-5.Ⓕ "Check of compressor start failure". • Check the stop valve.	—
5-time flash	Discharge temperature	Lighting	Lighting	Temperature of discharge temperature thermistor exceeds 241°F (116°C), compressor stops. Compressor can restart if discharge temperature thermistor reads 212°F (100°C) or less 3 minutes later.	• Check refrigerant circuit and refrigerant amount. • Refer to 10-5.Ⓖ "Check of LEV".	—
6-time flash	High pressure	Lighting	Lighting	The outdoor heat exchanger temperature exceeds 158°F (70°C) during cooling or the indoor gas pipe temperature exceeds 158°F (70°C) during heating (MUZ).	• Check refrigerant circuit and refrigerant amount. • Check the stop valve.	—
7-time flash	Fin temperature	3 times	Goes out	The fin temperature exceeds 189°F (87°C) during operation.	• Check around outdoor unit. • Check outdoor unit air passage. • Refer to 10-5.Ⓓ "Check of outdoor fan motor".	—
	P.C. board temperature	4 times	Goes out	The P.C. board temperature exceeds 158°F (70°C) during operation.		
8-time flash	Outdoor fan motor	Lighting	Lighting	Failure occurs continuously 3 times within 30 seconds after the fan gets started.	• Refer to 10-5.Ⓓ "Check of outdoor fan motor".	—
9-time flash	Nonvolatile memory data	Lighting	5 times	Nonvolatile memory data cannot be read properly.	• Replace the outdoor electronic control P.C. board.	○
10-time flash	Discharge temperature	Lighting	Lighting	The frequency of the compressor is kept 80 Hz or more and the discharge temperature is kept under 102°F (39°C) for more than 20 minutes.	• Check refrigerant circuit and refrigerant amount. • Refer to 10-5.Ⓖ "Check of LEV".	—
11-time flash	Communication error between P.C. boards	Lighting	6 times	Communication error occurs between the electronic control P.C. board and power board for more than 10 seconds.	• Check the connecting wire between outdoor electronic control P.C. board and power board.	—
				The communication between boards protection stop is continuously performed twice.		○
	Current sensor	Lighting	7 times	A short or open circuit is detected in the current sensor during compressor operating.	• Replace the power board.	—
				Current sensor protection stop is continuously performed twice.		○
	Zero cross detecting circuit	5 times	Goes out	Zero cross signal cannot be detected while the compressor is operating.	• Check the connecting wire among electronic control P.C. board, noise filter P.C. board and power board.	—
				The protection stop of the zero cross detecting circuit is continuously performed 10 times.		○

NOTE: Blinking patterns of this mode differ from the ones of Troubleshooting check table (10-3.).

The left lamp of OPERATION INDICATOR lamp (Indoor unit)	Abnormal point (Failure mode / protection)	LED indication (Outdoor P.C. board)		Condition	Correspondence	Indoor/outdoor unit failure mode recall function
		LED 1	LED 2			
11-time flash	Converter	5 times	Goes out	A failure is detected in the operation of the converter during operation.	• Check the voltage of power supply. • Replace the power board.	—
	Bus-bar voltage (1)	5 times	Goes out	The bus-bar voltage exceeds 400 V or falls to 200 V or below during compressor operating.		
	Bus-bar voltage (2) ※ Even if this protection stop is performed continuously 3 times, it does not mean the abnormality in outdoor power system.	6 times	Goes out	The bus-bar voltage exceeds 400 V or falls to 50 V or below during compressor operating.	• Check the voltage of power supply. • Replace the outdoor electronic control P.C. board.	

10-3. TROUBLESHOOTING CHECK TABLE

MUZ-D30NA MUZ-D36NA MUY-D30NA MUY-D36NA

No.	Symptom	Indication		Abnormal point / Condition	Condition	Correspondence
		LED1 (Red)	LED2 (Yellow)			
1	Outdoor unit does not operate.	Lightning	Twice	Outdoor power system	IPM protection stop or lock protection stop is continuously performed three times within 1 minute after the compressor gets started, or converter protection stop or bus-bar voltage protection stop is continuously performed 3 times within 3 minutes after start-up.	•Check the connection of the compressor connecting wire. •Refer to 10-5.Ⓐ "How to check inverter/compressor". •Refer to 10-5.Ⓕ "Check of compressor start failure". •Check the stop valve.
2		Lightning	3 times	Discharge temperature thermistor	A short circuit is detected in the thermistor during operation, or an open circuit is detected in the thermistor after 10 minutes of compressor start-up.	•Refer to 10-5.Ⓑ "Check of outdoor thermistor".
3		Lightning	4 times	Fin temperature thermistor	A short or open circuit is detected in the thermistor during operation.	•Refer to 10-5.Ⓑ "Check of outdoor thermistor".
				P.C. board temperature thermistor		•Replace the outdoor electronic control P.C. board.
4		Lightning	5 times	Ambient temperature thermistor	A short or open circuit is detected in the thermistor during operation.	•Refer to 10-5.Ⓑ "Check of outdoor thermistor".
				Outdoor heat exchanger temperature thermistor	A short circuit is detected in the thermistor during operation, or an open circuit is detected in the thermistor after 5 minutes (in cooling) and 10 minutes (in heating (MUZ)) of compressor start-up.	
				Defrost thermistor (MUZ)	A short circuit is detected in the thermistor during operation, or an open circuit is detected in the thermistor after 5 minutes of compressor start-up.	
5		Lightning	6 times	Serial signal	The communication fails between the indoor and outdoor unit for 3 minutes.	•Refer to 10-5.Ⓗ "How to check miswiring and serial signal error.
6		Lightning	7 times	Nonvolatile memory data	The nonvolatile memory data cannot be read properly.	•Replace the outdoor electronic control P.C. board.
7		Lightning	8 times	Current sensor	Current sensor protection stop is continuously performed twice.	•Replace the power board.
8		Lightning	11 times	Communication error between P.C. boards	The communication protection stop between boards is continuously performed twice.	•Check the connecting wire between outdoor electronic control P.C. board and power board.
9		Lightning	12 times	Zero cross detecting circuit	The protection stop of the zero cross detecting circuit is continuously performed 10 times.	•Check the connecting wire among outdoor electronic control P.C. board, noise filter P.C. board and power board.
10	'Outdoor unit stops and restarts 3 minutes later' is repeated.	Twice	Goes out	IPM protection	Overcurrent is detected after 30 minutes of compressor start-up.	•Reconnect compressor connector. •Refer to 10-5.Ⓐ "How to check inverter/compressor". •Refer to 10-5.Ⓕ "Check of compressor start failure". •Check the stop valve. •Check the power module (PAM module).
				Lock protection	Overcurrent is detected within 30 minutes of compressor start-up	
11		3 times	Goes out	Discharge temperature protection	Temperature of discharge temperature thermistor exceeds 241°F (116°C), compressor stops. Compressor can restart if discharge temperature thermistor reads 212°F (100°C) or less 3 minutes later.	•Check the amount of gas and refrigerant circuit. •Refer to 10-5.Ⓖ "Check of LEV".
12		4 times	Goes out	Fin temperature protection	The fin temperature exceeds 189°F (87°C) during operation.	• Check around outdoor unit. • Check outdoor unit air passage. • Refer to 10-5.Ⓓ "Check of outdoor fan motor".
				P.C. board temperature protection	The P.C. board temperature exceeds 158°F (70°C) during operation.	
13		5 times	Goes out	High-pressure protection	The outdoor heat exchanger temperature exceeds 158°F (70 °C) during cooling or indoor gas pipe temperature exceeds 158°F (70°C) during heating (MUZ).	•Check around of gas and the refrigerant circuit. •Check of stop valve.
14		8 times	Goes out	Converter protection	A failure is detected in the operation of the converter during operation.	•Replace the power board.
15		9 times	Goes out	Bus-bar voltage protection (1)	The bus-bar voltage exceeds 400 V or falls to 200 V or below during compressor operating.	• Check the voltage of power supply. • Replace the power board or the outdoor electronic control P.C. board. • Refer to 10-5.Ⓙ "Check of bus-bar voltage".
				Bus-bar voltage protection (2)	The bus-bar voltage exceeds 400 V or falls to 50 V or below during compressor operating.	
16		13 times	Goes out	Outdoor fan motor	Failure occurs continuously three times within 30 seconds after the fan gets started.	•Refer to 10-5.Ⓓ "Check of outdoor fan motor".
17		Lighting	8 times	Current sensor protection	A short or open circuit is detected in the current sensor during compressor operating.	•Replace the power board.
18		Lighting	11 times	Communication between P.C. boards protection	Communication error occurs between the outdoor electronic control P.C. board and power board for more than 10 seconds.	•Check the connecting wire between outdoor electronic control P.C. board and power board.
19		Lighting	12 times	Zero cross detecting circuit protection	Zero cross signal cannot be detected while the compressor is operating.	•Check the connecting wire among outdoor electronic control P.C. board, noise filter P.C. board and power board.

NOTE 1. The location of LED is illustrated at the right figure. Refer to 10-6.1.
2. LED is lighted during normal operation.

Outdoor electronic control P.C. board (Parts side)

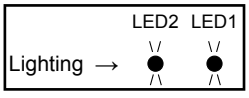

The flashing frequency shows the number of times the LED blinks after every 2.5-second OFF.
(Example) When the flashing frequency is “2”.

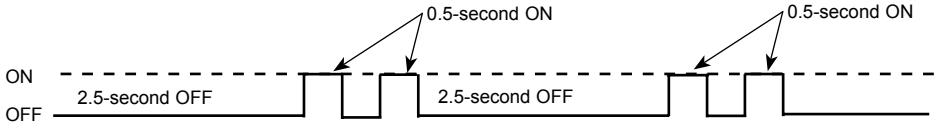

No.	Symptom	Indication		Abnormal point / Condition	Condition	Correspondence
		LED1 (Red)	LED2 (Yellow)			
20	Outdoor unit operates.	Once	Lighting	Primary current protection	The input current exceeds 15 A.	• These symptoms do not mean any abnormality of the product, but check the following points. • Check if indoor filters are clogged. • Check if refrigerant is short. • Check if indoor/outdoor unit air circulation is short cycled.
				Secondary current protection	The current of the compressor exceeds 15 A.	
21		Twice	Lighting	High-pressure protection (MUZ)	The indoor gas pipe temperature exceeds 113°F (45°C) during heating.	
				Defrosting in cooling	The indoor gas pipe temperature falls 37°F (3°C) or below during cooling.	
22		3 times	Lighting	Discharge temperature protection	The discharge temperature exceeds 212°F (100°C) during operation.	• Check refrigerant circuit and refrigerant amount. • Refer to 10-5.Ⓖ "Check of LEV". • Refer to 10-5.Ⓑ "Check of outdoor thermistors".
23		4 times	Lighting	Low discharge temperature protection	The frequency of the compressor is kept 80 Hz or more and the discharge temperature is kept under 102°F (39°C) for more than 20 minutes.	• Refer to 10-5.Ⓖ "Check of LEV". • Check refrigerant circuit and refrigerant amount.
24		5 times	Lighting	Cooling high-pressure protection	The outdoor heat exchanger temperature exceeds 136°F (58 °C) during operation.	• This symptom does not mean any abnormality of the product, but check the following points. • Check if indoor filters are clogged. • Check if refrigerant is short. • Check if indoor/outdoor unit air circulation is short cycled.
25	Outdoor unit operates	9 times	Lighting	Inverter check mode	The unit is operated with emergency operation switch.	–
26		Lighting	Lighting	Normal	–	–

10-4. TROUBLE CRITERION OF MAIN PARTS

MUZ-D30NA MUZ-D36NA MUY-D30NA MUY-D36NA

<table>
<tr><th>Part name</th><th>Check method and criterion</th><th>Figure</th></tr>
<tr><td>Defrost thermistor (RT61) (MUZ)

Ambient temperature thermistor (RT65)

Outdoor heat exchanger temperature thermistor (RT68)

Fin temperature thermistor (RT64)</td><td>Measure the resistance with a tester.

Refer to 10-6. “Test point diagram and voltage”, 1. “Outdoor electronic control P.C. board”, for the chart of thermistor.</td><td></td></tr>
<tr><td>Discharge temperature thermistor (RT62)</td><td>Measure the resistance with a tester. Before measurement, hold the thermistor with your hands to warm it up.

Refer to 10-6. “Test point diagram and voltage”, 1. “Outdoor electronic control P.C. board”, for the chart of thermistor.</td><td></td></tr>
<tr><td>Compressor</td><td>Measure the resistance between terminals using a tester.
(Temperature: 14 ~ 104°F (-10 ~ 40°C))
<table><tr><th>Normal</th></tr><tr><td>1.24 ~ 1.53 Ω</td></tr></table></td><td> 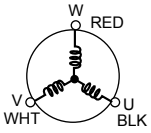
</td></tr>
<tr><td>Outdoor fan motor</td><td>Measure the resistance between lead wires using a tester.
(Temperature: 14 ~ 104°F (-10 ~ 40°C))
<table><tr><th>Color of lead wire</th><th>Normal</th></tr><tr><td>RED – BLK</td><td rowspan="3">13 ~ 16 Ω</td></tr><tr><td>BLK – WHT</td></tr><tr><td>WHT – RED</td></tr></table></td><td> 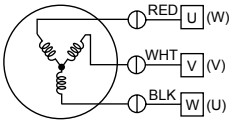
</td></tr>
<tr><td>R. V. coil (MUZ)</td><td>Measure the resistance using a tester.
(Temperature: 14 ~ 104°F (-10 ~ 40°C))
<table><tr><th>Normal</th></tr><tr><td>1.20 ~ 1.55 kΩ</td></tr></table></td><td></td></tr>
<tr><td>Linear expansion valve</td><td>Measure the resistance using a tester.
(Temperature: 14 ~ 104°F (-10 ~ 40°C))
<table><tr><th>Color of lead wire</th><th>Normal</th></tr><tr><td>WHT – RED</td><td rowspan="4">38 ~ 50 Ω</td></tr><tr><td>RED – ORN</td></tr><tr><td>YLW – BRN</td></tr><tr><td>BRN – BLU</td></tr></table></td><td> 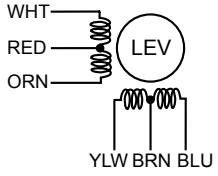
</td></tr>
</table>

10-5. TROUBLESHOOTING FLOW

Ⓐ How to check inverter/compressor

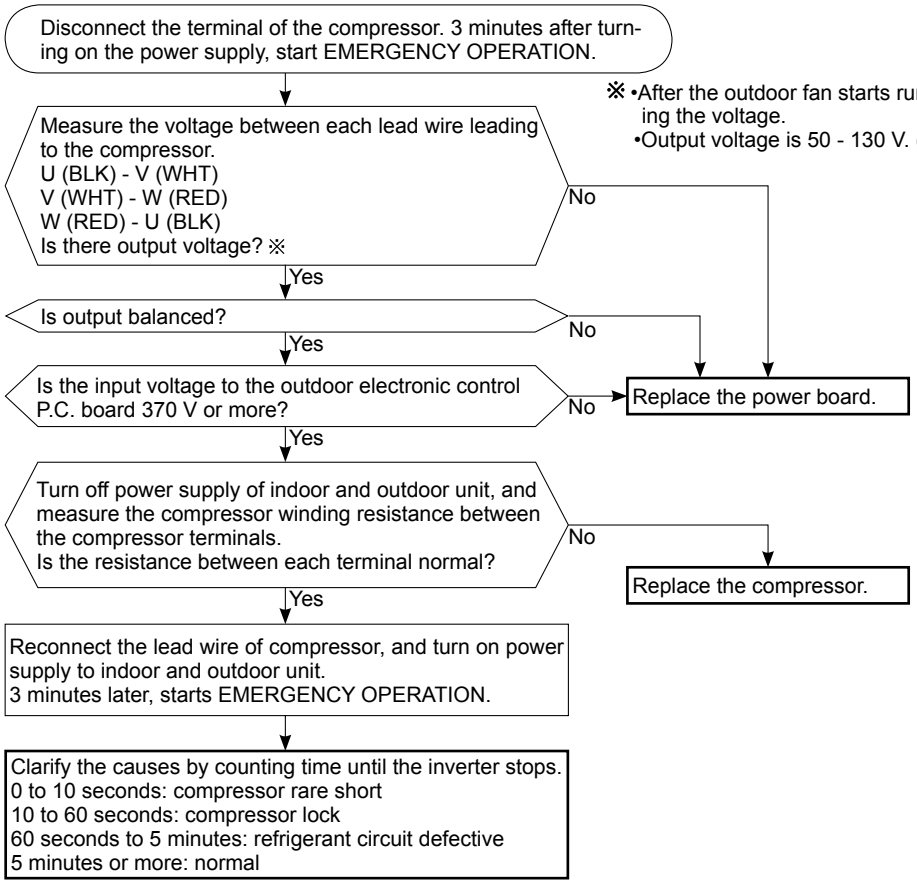

Ⓑ Check of outdoor thermistors

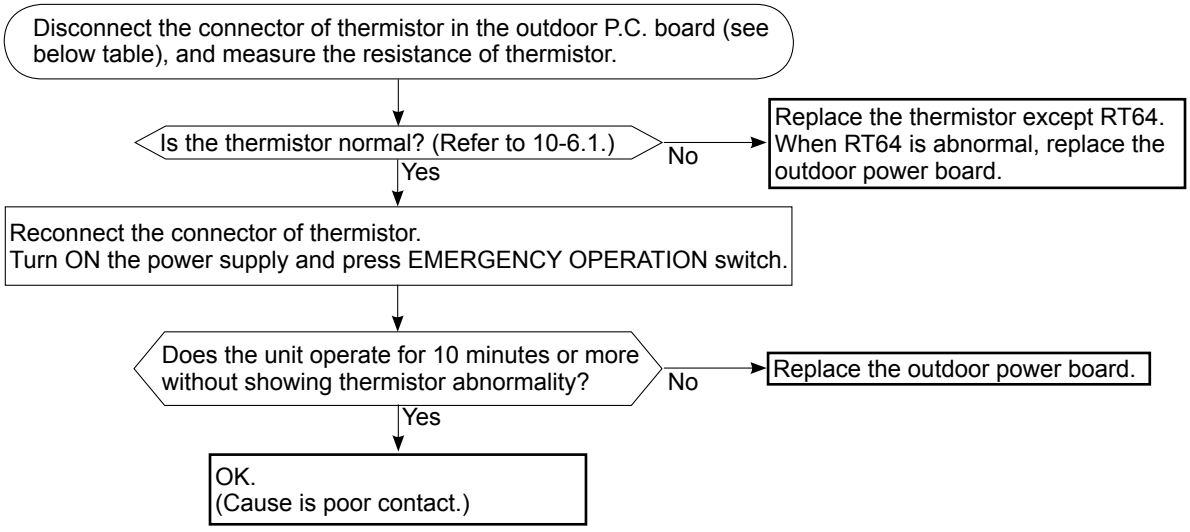

Thermistor	Symbol	Connector, Pin No.	Board
Defrost (**MUZ**)	RT61	Between CN661 pin1 and pin2	Outdoor electronic control P.C. board
Discharge temperature	RT62	Between CN661 pin3 and pin4	
Outdoor heat exchanger temperature	RT68	Between CN661 pin7 and pin8	
Ambient temperature	RT65	Between CN663 pin1 and pin2	
Fin temperature	RT64	Between CN3 pin1 and pin2	Outdoor power board

Ⓒ Check of R.V. coil

MUZ-D30/36

• Heating operation does not work.

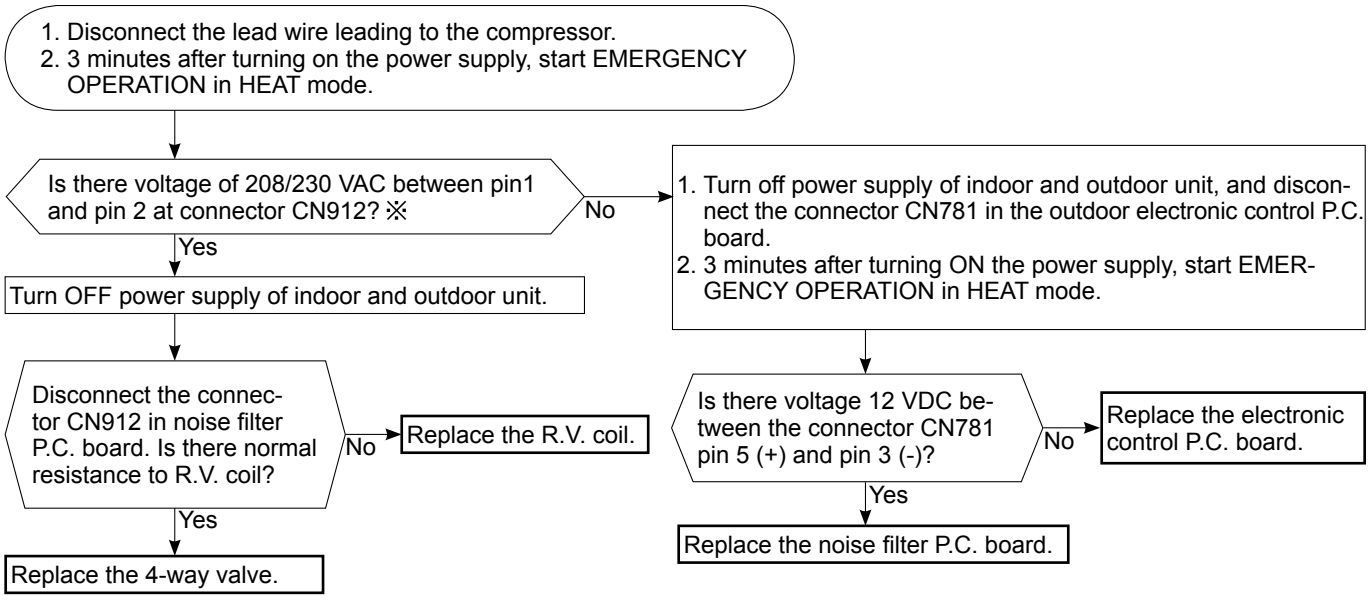

• Cooling operation does not work.

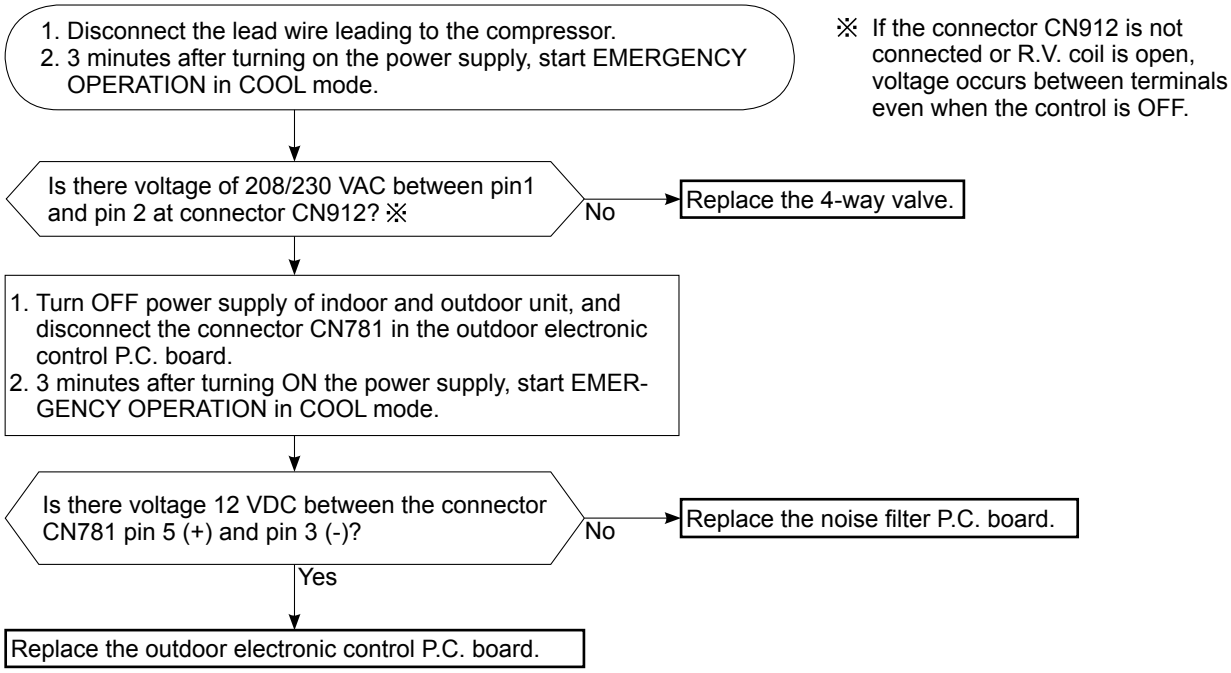

※ If the connector CN912 is not connected or R.V. coil is open, voltage occurs between terminals even when the control is OFF.

Ⓓ Check of outdoor fan motor

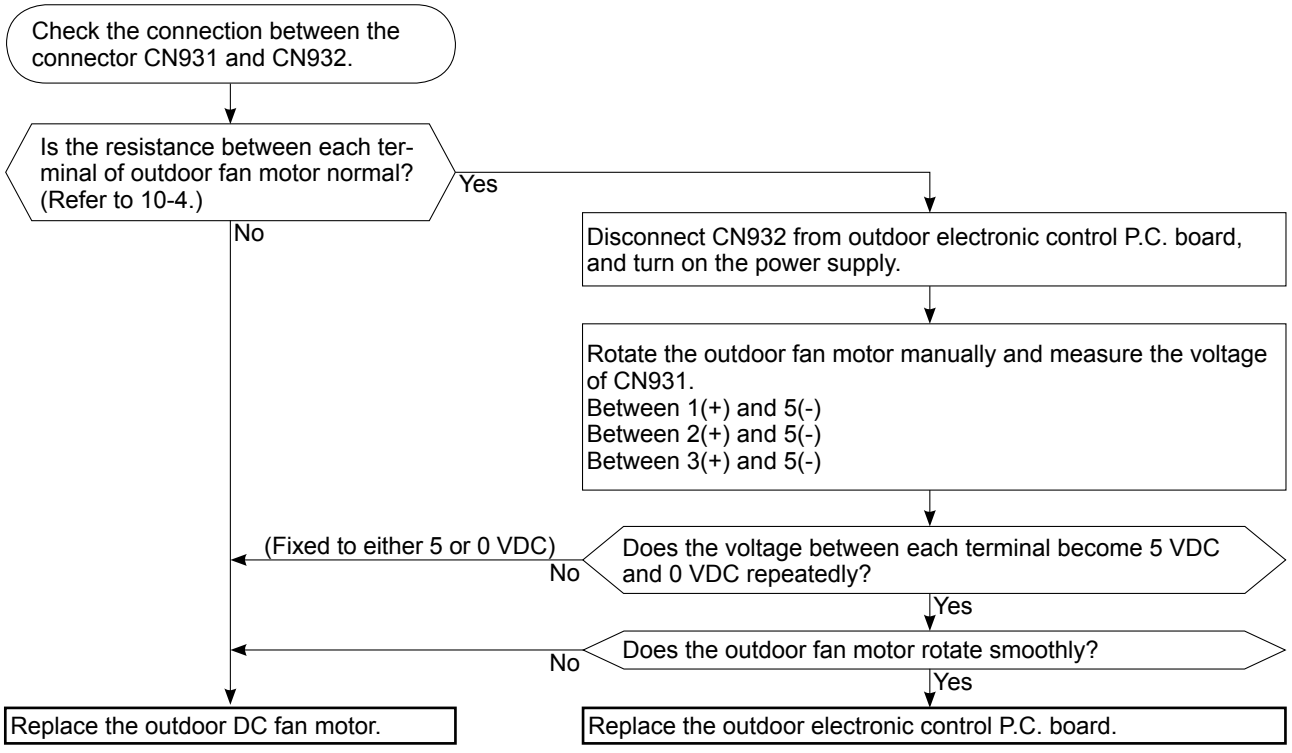

Ⓔ Check of power supply

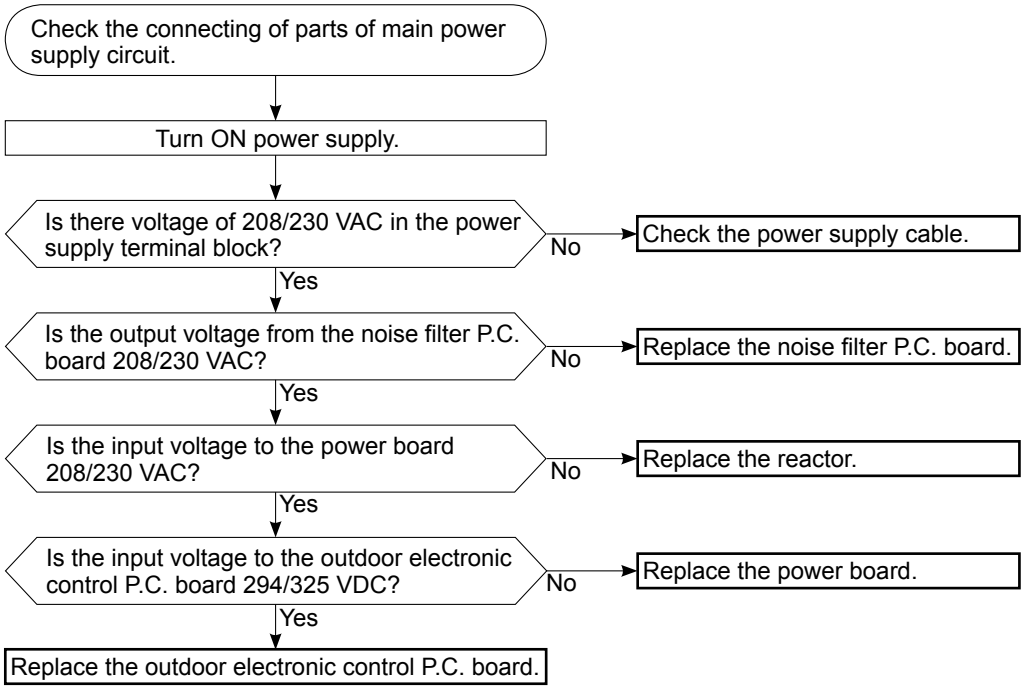

Ⓕ Check of compressor start failure

Confirm that 1~4 is normal.
•Electrical circuit check
1. Contact of lead wire leading to compressor
2. Output voltage of the outdoor electronic control P.C. board and balance of them (See 10-5.Ⓐ)
3. Direct current voltage to the outdoor electronic control P.C. board
4. Voltage between outdoor terminal block S1-S2

Does the compressor run for 10 seconds or more after it starts?
- Yes → Check the refrigerant circuit. Check the stop valve.
- No →

After the compressor is heated with a drier, does the compressor start? ※1
- No → Replace the compressor.
- Yes →

Compressor start failure. Activate pre-heat control. (Refer to 9-1. "PRE-HEAT CONTROL")

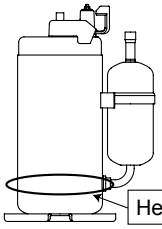

※1
Heat the compressor with a drier for about 20 minutes. Do not recover refrigerant gas while heating.

ⒼCheck of LEV

Turn ON power supply to the outdoor unit after checking LEV coil is mounted to the LEV body securely.

Is "click - click" sound heard? Or, do you feel vibration of the LEV coil with a hand?
- Yes → Normal
- No →

Disconnect the connector CN795. Is there normal resistance to LEV coil?
- Yes → Replace the outdoor electronic control P.C. board.
- No → Replace the LEV coil.

Ⓗ How to check miswiring and serial signal error

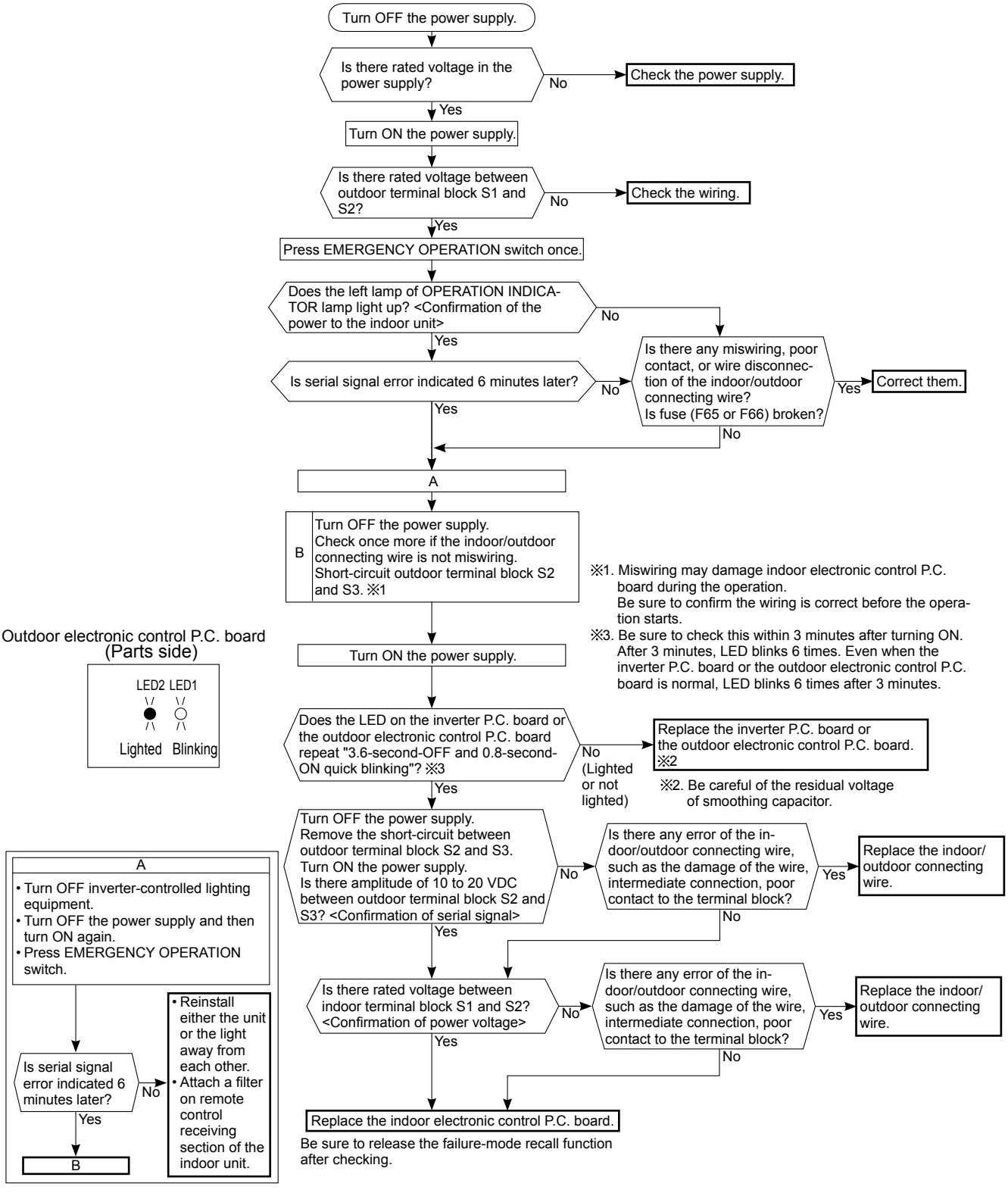

Ⓘ Check of HPS

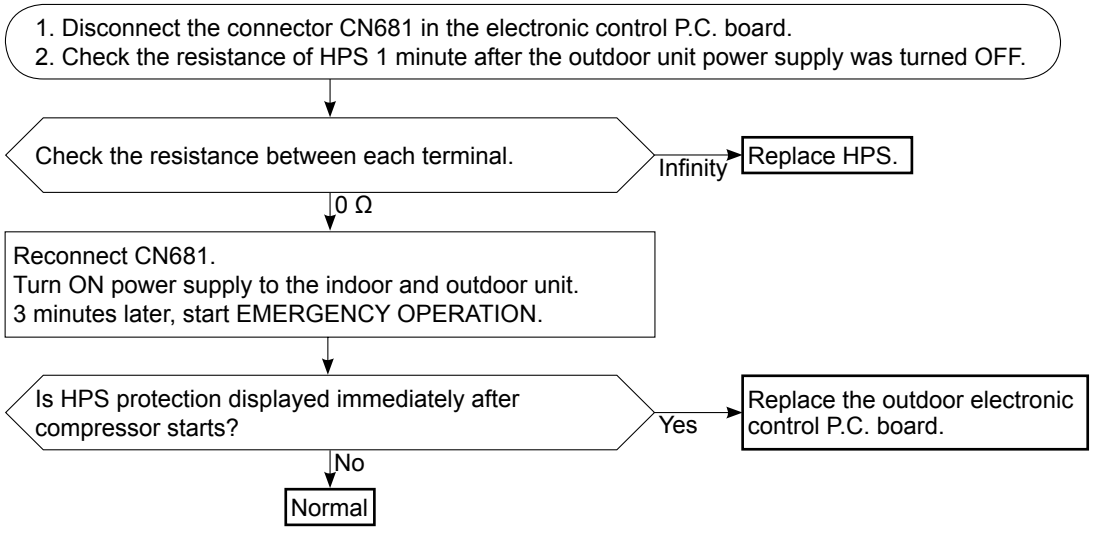

Ⓙ Check of bus-bar voltage

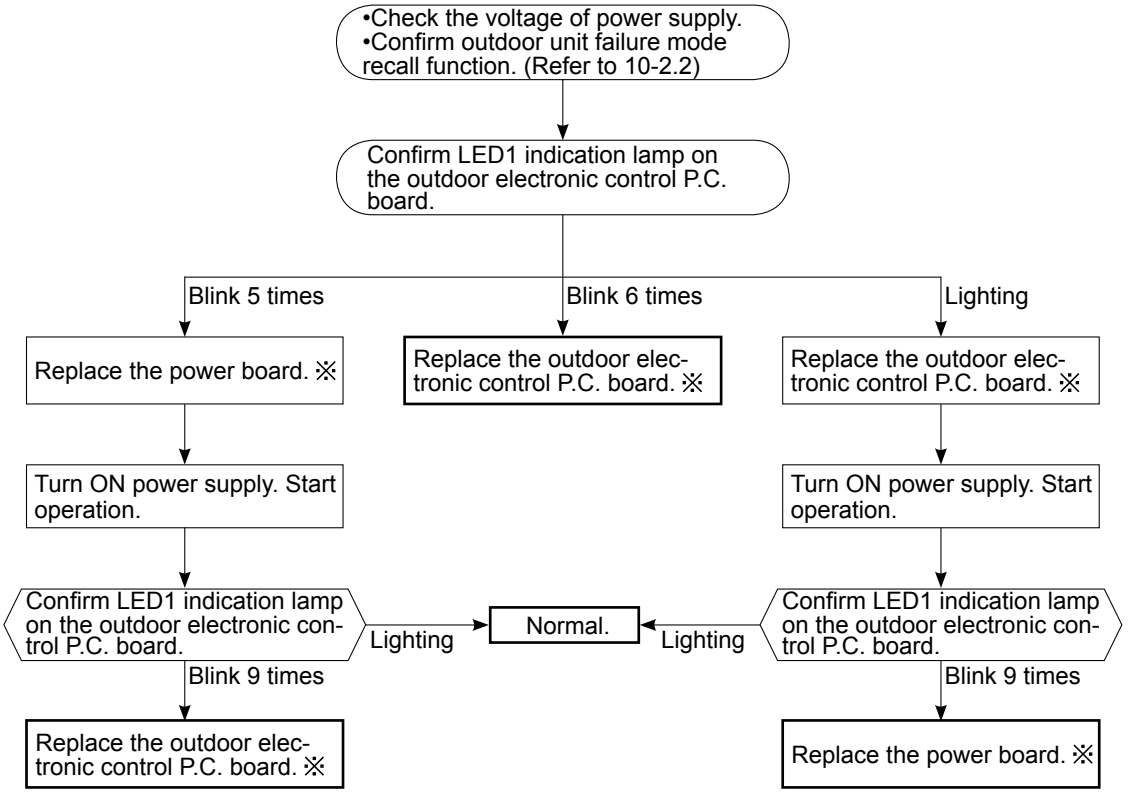

※ Turn OFF power supply before removing P.C. board.

Ⓚ Electromagnetic noise enters into TV sets or radios

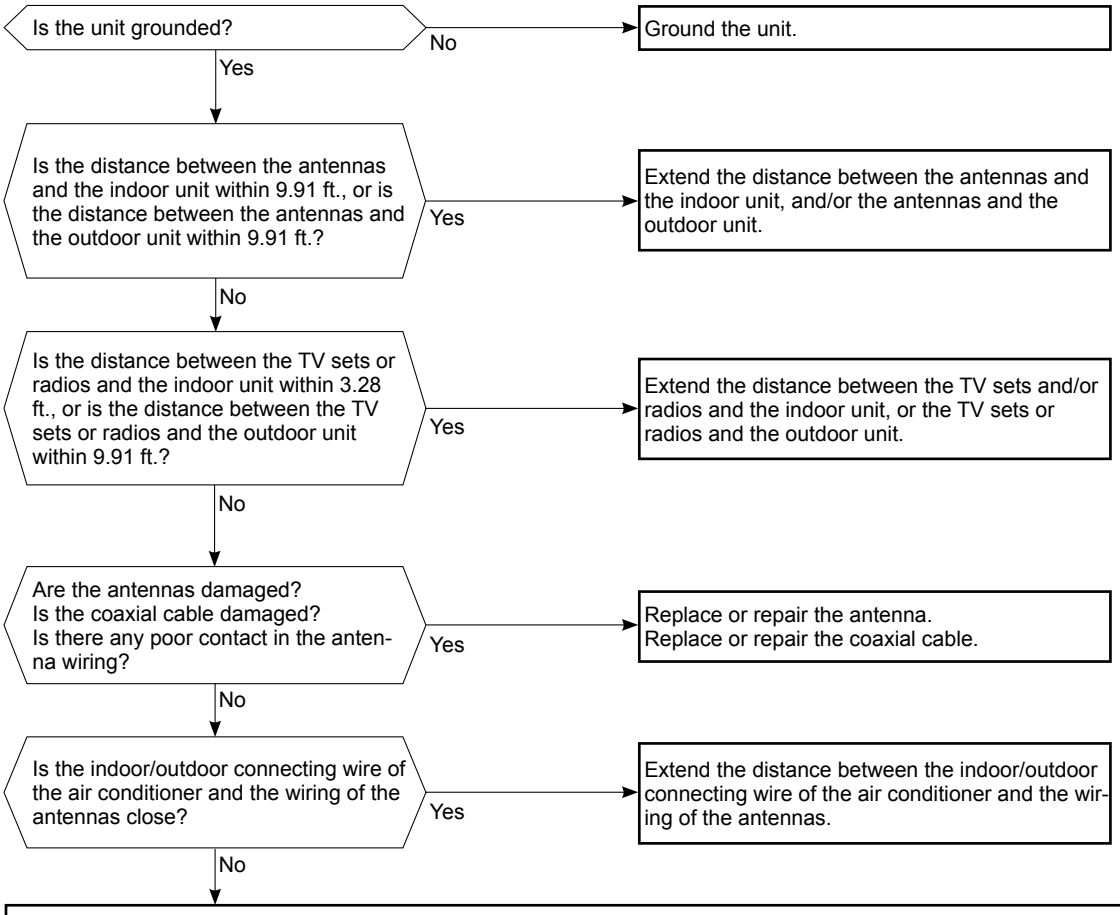

Even if all of the above conditions are fulfilled, the electromagnetic noise may enter, depending on the electric field strength or the installation condition (combination of specific conditions such as antennas or wiring).
Check the followings before asking for service.

1. Devices affected by the electromagnetic noise
   TV sets, radios (FM/AM broadcast, shortwave)
2. Channel, frequency, broadcast station affected by the electromagnetic noise
3. Channel, frequency, broadcast station unaffected by the electromagnetic noise
4. Layout of:
   indoor/outdoor unit of the air conditioner, indoor/outdoor wiring, grounding wire, antennas, wiring from antennas, receiver
5. Electric field intensity of the broadcast station affected by the electromagnetic noise
6. Presence or absence of amplifier such as booster
7. Operation condition of air conditioner when the electromagnetic noise enters in
   1) Turn OFF the power supply once, and then turn ON the power supply. In this situation, check for the electromagnetic noise.
   2) Within 3 minutes after turning ON the power supply, press OPERATE/STOP (ON/OFF) button on the remote controller for power ON, and check for the electromagnetic noise.
   3) After a short time (3 minutes later after turning ON), the outdoor unit starts running. During operation, check for the electromagnetic noise.
   4) Press OPERATE/STOP (ON/OFF) button on the remote controller for power OFF, when the outdoor unit stops but the indoor/outdoor communication still runs on. In this situation, check for the electromagnetic noise.

10-6. TEST POINT DIAGRAM AND VOLTAGE

1. Outdoor electronic control P.C. board

MUZ-D30NA MUZ-D36NA MUY-D30NA MUY-D36NA

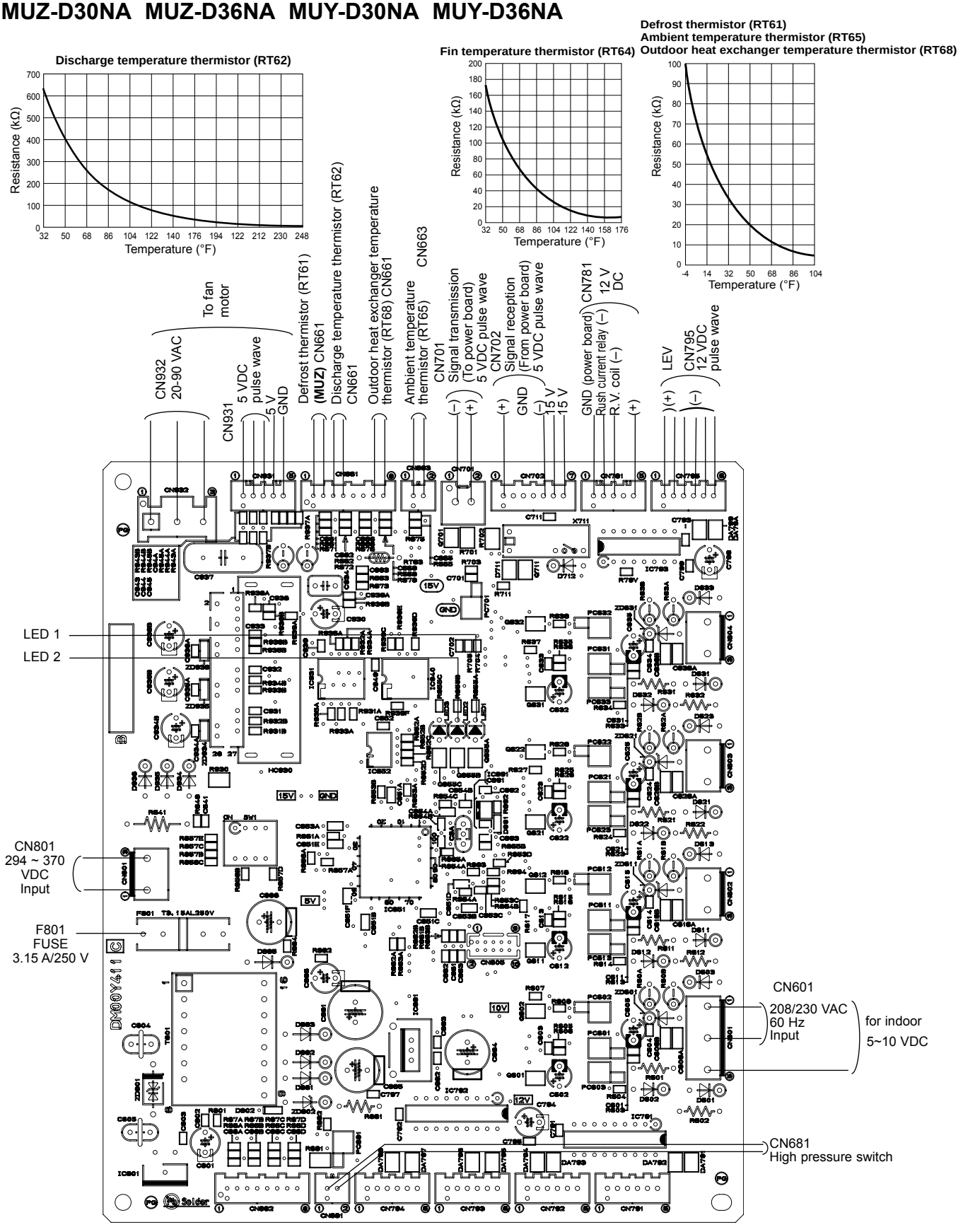

2. Noise filter P.C. board

MUZ-D30NA MUZ-D36NA MUY-D30NA MUY-D36NA

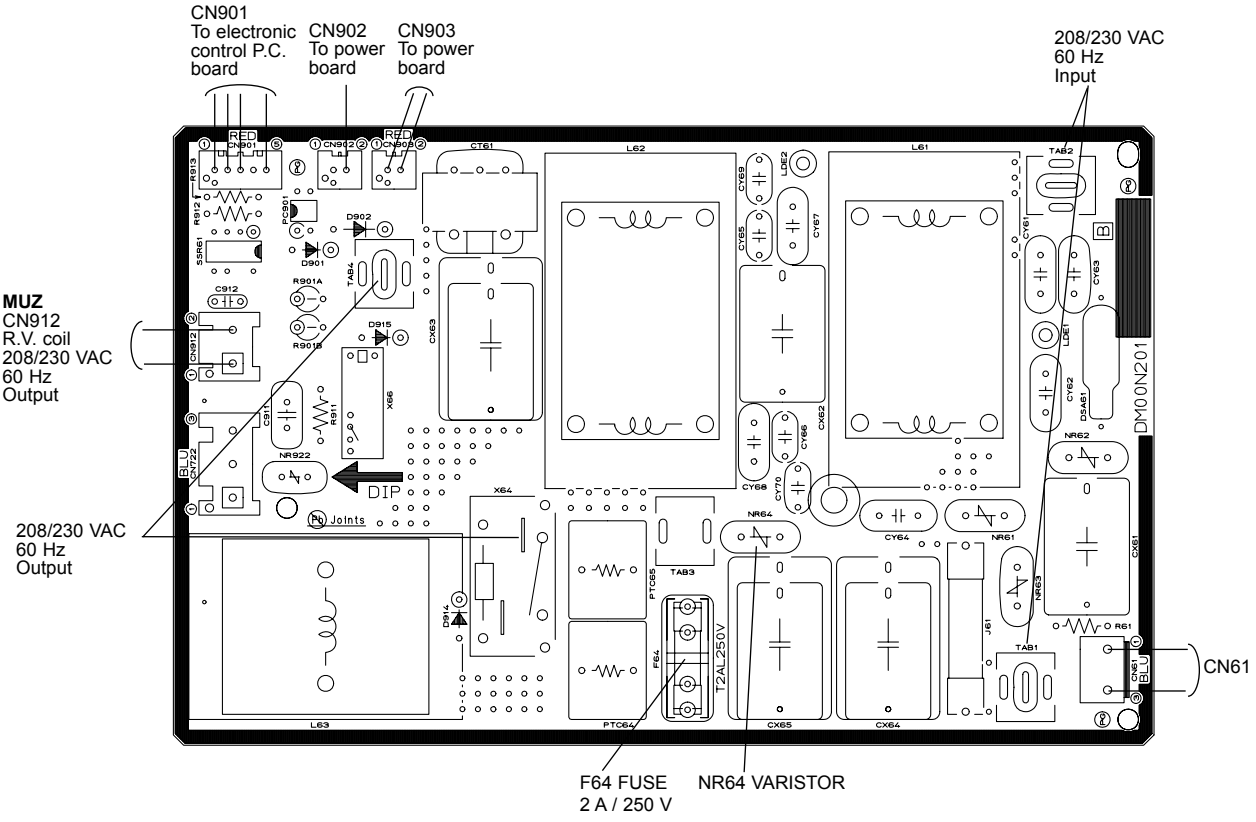

3. Outdoor power board

MUZ-D30NA MUZ-D36NA MUY-D30NA MUY-D36NA

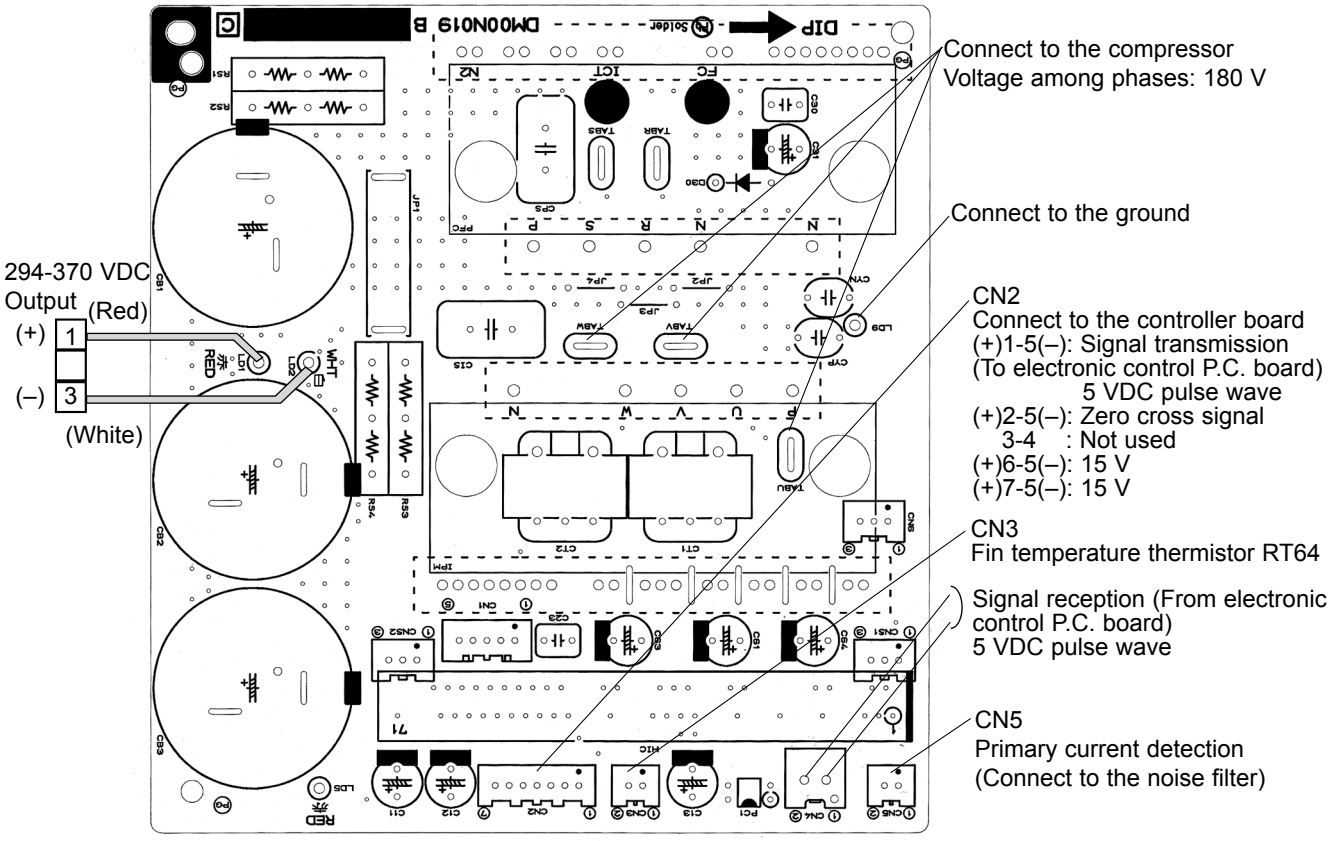

11 DISASSEMBLY INSTRUCTIONS

<"Terminal with locking mechanism" Detaching points>

The terminal which has the locking mechanism can be detached as shown below.
There are two types (refer to (1) and (2)) of the terminal with locking mechanism.
The terminal without locking mechanism can be detached by pulling it out.
Check the shape of the terminal before detaching.

(1) Slide the sleeve and check if there is a locking lever or not.

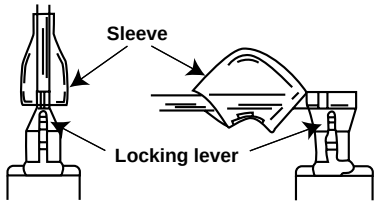

① Slide the sleeve.
② Pull the terminal while pushing the locking lever.

(2) The terminal with this connector has the locking mechanism.

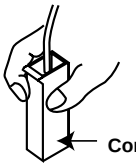

① Hold the sleeve, and pull out the terminal slowly.

MUZ-D30NA MUZ-D36NA MUY-D30NA MUY-D36NA

NOTE: Turn OFF power supply before disassembling.

OPERATING PROCEDURE	PHOTOS
1. Removing the cabinet (1) Remove the screws of the service panel. (2) Remove the screws of the top panel. (3) Remove the screw of the valve cover. (4) Remove the service panel. (5) Remove the top panel. (6) Remove the valve cover. (7) Remove the screws of the cabinet. (8) Remove the cabinet. (9) Remove the screws of the back panel. (10) Remove the back panel.	**Photo 1** 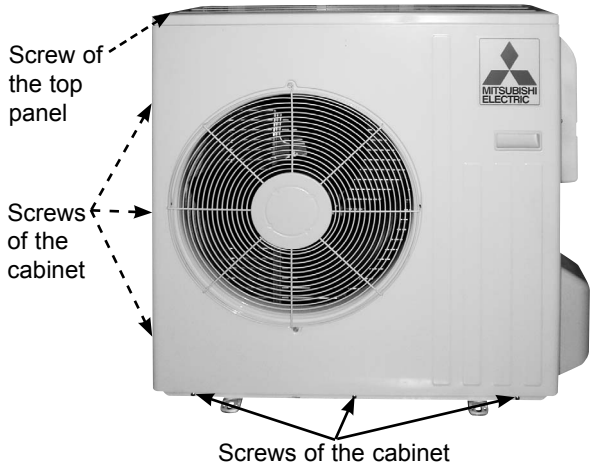
Photo 3 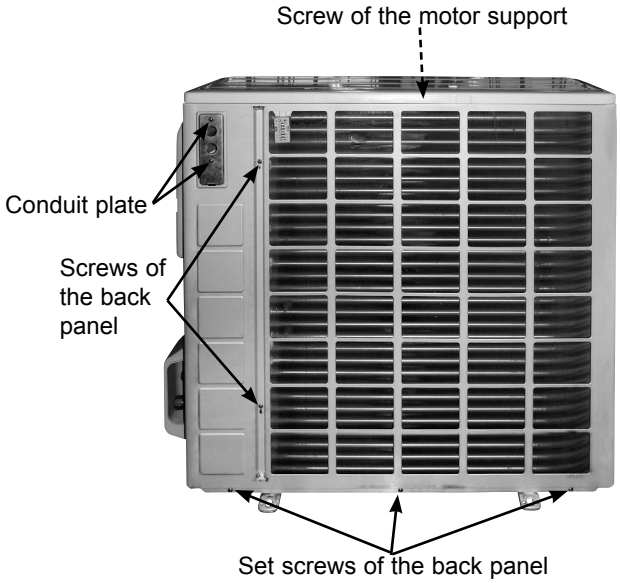 	**Photo 2** 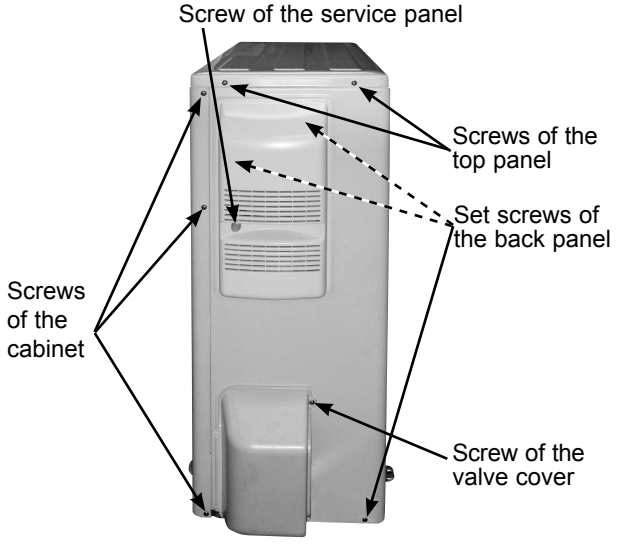

OPERATING PROCEDURE

2. Removing the inverter assembly, P.C. board and power board

(1) Remove the top panel, cabinet, service panel and the back panel. (Refer to 1.)
(2) Disconnect the following connectors:
<Electronic control P.C. board>
CN931 and CN932 (Fan motor)
CN795 (LEV)
CN661 (Discharge temperature thermistor, defrost thermistor (MUZ) and outdoor heat exchanger temperature thermistor)
CN663 (Ambient temperature thermistor)
CN681 (High pressure switch) (MUZ)
<Noise filter P.C. board>
CN912 (4-way valve) (MUZ)
<Compressor>
<Reactor>
(4) Remove the screws fixing the relay panel.
(5) Remove the inverter assembly.
(6) Disconnect all connectors and lead wires on the electronic control P.C. board.
(7) Remove the electronic control P.C. board from the inverter assembly.
(8) Remove the screws fixing the power board assembly.
(9) Disconnect all connectors and lead wires on the power board.
(10) Remove the power board from the inverter assembly.
(11) Disconnect all connectors and lead wires on the noise filter P.C. board.
(12) Remove the noise filter P.C. board from the inverter assembly.

3. Removing R.V. coil (MUZ)

(1) Remove the top panel, cabinet, service panel and the back panel. (Refer to 1.)
(2) Disconnect the following connectors:
<Noise filter P.C. board>
CN912 (4-way valve)
(3) Remove the R.V. coil. (Photo 9)

PHOTOS

Photo 4

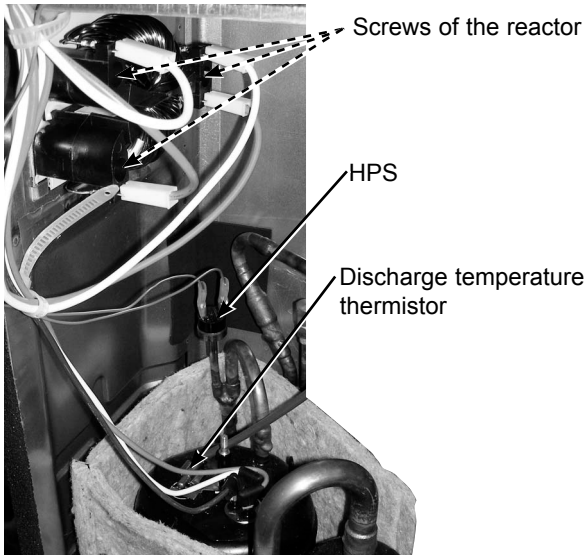

Photo 5 (Inverter assembly)

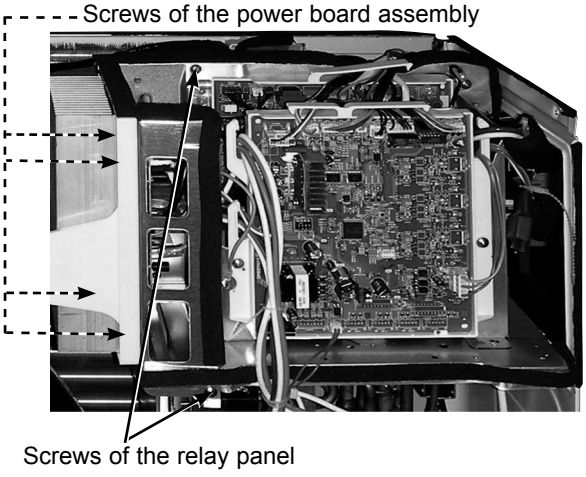

Photo 6

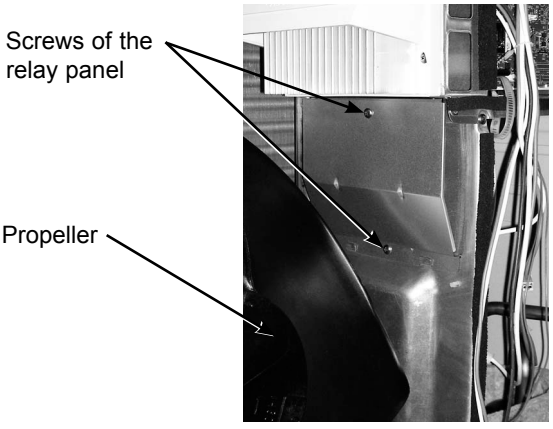

OPERATING PROCEDURE	PHOTOS
4. Removing the defrost thermistor (MUZ), discharge temperature thermistor, outdoor heat exchanger temperature thermistor and ambient temperature thermistor (1) Remove the top panel, cabinet, service panel and the back panel. (Refer to 1.) (2) Disconnect the following connectors: <Electronic control P.C. board> CN661 (Discharge temperature thermistor, defrost thermistor (**MUZ**) and outdoor heat exchanger temperature thermistor) CN663 (Ambient temperature thermistor) (3) Pull out the defrost thermistor from its holder. (Photo 7) (**MUZ**) (4) Pull out the discharge temperature thermistor from its holder. (Photo 4) (5) Pull out the outdoor heat exchanger temperature thermistor from its holder. (Photo 7) (6) Pull out the ambient temperature thermistor from its holder. (Photo 7)	**Photo 7** 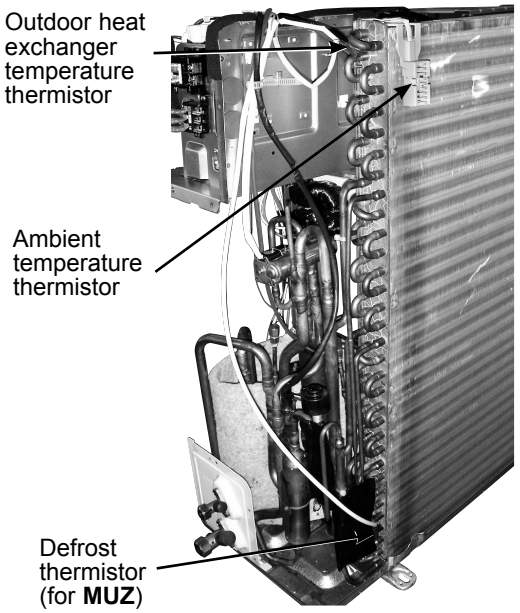
5. Removing outdoor fan motor (1) Remove the top panel, cabinet, service panel and the back panel. (Refer to 1.) (2) Disconnect the following connectors: <Electronic control P.C. board> CN931 and CN932 (Fan motor) (3) Remove the propeller. (4) Remove the screws fixing the outdoor fan motor. (5) Remove the outdoor fan motor.	**Photo 8** 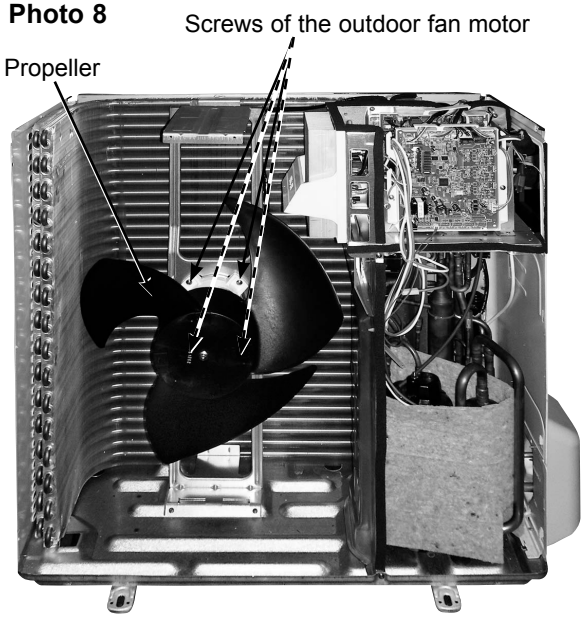

OPERATING PROCEDURE	PHOTOS
6. Removing the compressor and 4-way valve (1) Remove the top panel, cabinet, service panel and the back panel. (Refer to 1.) (2) Remove the inverter assembly. (Refer to 2.) (3) Remove the R.V. coil. (Refer to 3.) (4) Recover gas from the refrigerant circuit. **NOTE:** Recover gas from the pipes until the pressure gauge shows 0 PSIG. (5) Detach the welded part of the suction and the discharge pipe connected with compressor. (Photo 9) (6) Remove the compressor nuts. (7) Remove the compressor. (8) Detach the welded part of 4-way valve and pipe. (Photo 8)	**Photo 9** 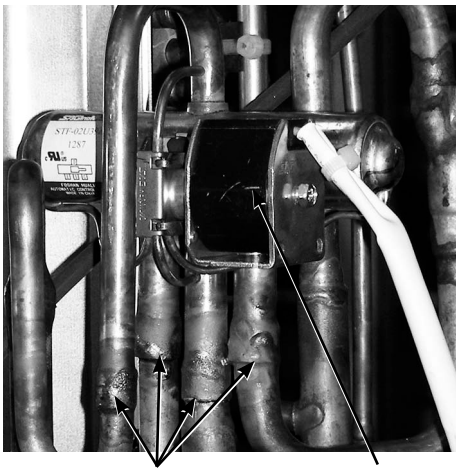 Welded parts of 4-way valve R.V. coil **Photo 10** 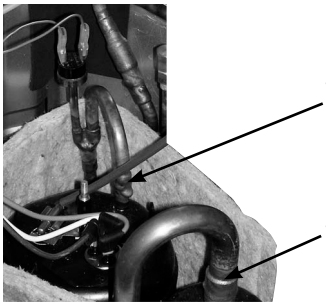 Welded part of the discharge pipe Welded part of the suction pipe
7. Removing the reactor (1) Remove the top panel, cabinet, service panel and the back panel. (Refer to 1.) (2) Disconnect the reactor lead wire. (3) Remove the screws of the reactor, and remove the reactor.	

MITSUBISHI ELECTRIC CORPORATION
HEAD OFFICE: TOKYO BLDG., 2-7-3, MARUNOUCHI, CHIYODA-KU, TOKYO 100-8310, JAPAN

© Copyright 2008 MITSUBISHI ELECTRIC CO.,LTD
Distributed in Jan. 2009. No. OBH502 REVISED EDITION-B 5
Distributed in Mar. 2008. No. OBH502 REVISED EDITION-A 7
Distributed in Feb. 2008. No. OBH502 7
Made in Japan

New publication, effective Jan. 2009
Specifications subject to change without notice.

Appendix D
Storm Water Pollution Prevention Plan for O&M Activities (SWPPP)

(Appendices A and B of the SWPPP are Provided on CD-ROM Only)

FINAL

Industrial Storm Water Pollution Prevention Plan for Operation of the Topock Groundwater Remedy

PG&E Topock Compressor Station Needles, California

Prepared for

Pacific Gas and Electric Company

November 2015

CH2MHILL®
155 Grand Avenue, Suite 800
Oakland, CA 94612

Contents

Page

Acronyms and Abbreviations ..... **v**

1.0 Introduction **1-1**
1.1 Roles and Responsibilities 1-2

2.0 Facility and System Description **2-1**
2.1 List of Industrial Materials 2-2

3.0 Activities Assessment and Identification of Potential Pollutant Sources **3-1**

4.0 Best Management Practices **4-1**
4.1 Minimum BMPs 4-1
4.2 Advanced BMPs 4-2
4.3 Temporary Suspension of Activities 4-3

5.0 Monitoring Implementation Plan **5-1**

6.0 Sampling and Analysis Plan **6-1**
6.1 Comparison to Applicable Numeric Action Levels and Exceedance Response Actions 6-1
6.2 Annual Evaluation 6-2

7.0 Reporting **7-1**

8.0 Training **8-1**
8.1 Training Requirements 8-1
8.2 Training Documentation 8-1

9.0 Signed Certification **9-1**

Exhibits

1-1 SWPPP Team 1-2
8-1 Example SWPPP Training Form 8-1

Tables

2-1 List of Industrial Materials
3-1 Summary of Activities Assessment and Identification of Potential Pollutant Sources
4-1 Summary of Site-Specific BMPs
5-1 Potential Discharge Locations
6-1 Applicable Numeric Action Levels (NALs)

Figures

1 Site Location Map
2 General Remedy System Layout
3 Moabi Regional Park Remedy System Layout
4 Waste Management Areas
5 Transwestern Bench Remedy System Layout
6 MW-20 Bench Remedy System Layout
7 Moabi Regional Park Soil Storage and Long-term Remedy Support Area

Appendices

A California Industrial Storm Water General Permit
B California Industrial Storm Water General Permit – Change Sheet

Acronyms and Abbreviations

BMPs	Best Management Practices
CERCLA	Comprehensive Environmental Response, Compensation, and Liability Act
CIP	Clean in Place
DOI	United States Department of the Interior
DTSC	California Department of Toxic Substances Control
gpm	gallons per minute
IGP	California Industrial Storm Water General Permit
IM	Interim Measure
IW	injection well
IRZ	In-situ Reactive Zone
MIP	Monitoring Implementation Plan
NSWD	non-storm-water discharge
PG&E	Pacific Gas and Electric Company
SAP	Sampling and Analysis Plan
RWQCB	Colorado River Basin Regional Water Quality Control Board
TW	Transwestern

SECTION 1

Introduction

Pacific Gas and Electric Company (PG&E) is implementing a groundwater remedy at the PG&E Topock Compressor Station (TCS or Compressor Station). The Compressor Station is located adjacent to the Colorado River in eastern San Bernardino County, California, approximately 12 miles southeast of Needles, California, south of Interstate 40 (I-40), in the north end of the Chemehuevi Mountains (see Figure 1; figures are located at the end of this document).

The California Department of Toxic Substances Control (DTSC) is the state lead agency overseeing corrective actions at the Compressor Station in accordance with the Resource Conservation and Recovery Act (RCRA) Corrective Action. In February 1996, PG&E and DTSC entered into a Corrective Action Consent Agreement pursuant to Section 25187 of the California Health and Safety Code. The U.S. Department of the Interior (DOI) is the lead federal agency overseeing response actions for land under its jurisdiction, custody, or control near the Compressor Station pursuant to the Comprehensive Environmental Response, Compensation, and Liability Act (CERCLA). In July 2005, PG&E and the federal agencies (DOI, U.S. Bureau of Land Management [BLM], U.S. Fish and Wildlife Services (USFWS), and U.S. Bureau of Reclamation [BOR]) entered into an Administrative Consent Agreement (DOI 2005). In addition, PG&E and the United States executed a Remedial Design/Remedial Action Consent Decree (CD), on behalf of DOI, under CERCLA in 2012, which was approved by the U.S. District Court for the Central District of California in November 2013.

In a coordinated effort, DOI and DTSC selected the groundwater remedy to address chromium in groundwater at Solid Waste Management Unit (SWMU) 1/Area of Concern (AOC) 1 and AOC 10. The DOI decision is presented in the Record of Decision (ROD) (DOI 2010), and the DTSC decision is presented in a decision package that includes the certification of the Final Environmental Impact Report (EIR; DTSC 2011), the Final Statement of Basis (SOB), the Statement of Decision, and the Resolution of Approval, as well as a directive letter to PG&E on January 31, 2011. DOI and DTSC executed a Memorandum of Understanding (MOU) concerning the coordination in overseeing the implementation of groundwater response action at TCS on November 22, 2011 (DTSC and DOI 2011).

Although the groundwater remedy operation is not an activity that requires coverage under the California General Industrial Storm Water Permit, NPDES No. CAS000001, Order 2014-0057-DWQ (IGP),[1] the EIR mitigation measure HYDRO-1 and the Federal Action-Specific ARAR #34 (DOI 2010) require that an industrial Storm Water Pollution Prevention Plan (SWPPP) be prepared that covers the post-construction operation of the remedy.

This SWPPP has been developed to comply with the substantive requirements of the 2015 IGP. Pursuant to CERCLA Section 121(e), the onsite portions of CERCLA remedial actions are not required to obtain permits or comply with administrative requirements; therefore, only the substantive provisions of the IGP are addressed. The IGP is included in Appendices A and B of this SWPPP.

In accordance with the IGP, storm water pollution prevention has two major objectives:

- Identifying and evaluating sources of pollutants associated with industrial activities that may affect the quality of storm water discharges and authorized non-storm-water discharges (NSWDs) from the facility.
- Identifying and implementing site-specific best management practices (BMPs) to reduce or prevent pollutants from being released in storm water discharges and/or authorized NSWDs that may affect receiving water quality.

[1] The need for coverage under the IGP is triggered by being in one of the SIC codes or industrial activities identified in Attachment A to the IGP. The remedy does not fit into these categories.

This SWPPP covers all remedy facilities located outside of the Compressor Station, the Compressor Station evaporation ponds, and the long-term remedy support area at Moabi Regional Park.[2] The SWPPP identifies BMPs, establishes a monitoring implementation plan (MIP) (include visual observations), a sampling and analysis plan (SAP) (include annual evaluations), reporting, and training.

Conditions or circumstances which may require future revisions to be made to this SWPPP (as required by Section X.C.2 of the IGP) include:

- Changes in the design that materially affect the industrial activities subject under the SWPPP
- Additions of materials that are significant industrial materials or potential pollutants in the context of potential impact to storm water, e.g., use/store outside, readily dispersible in storm water, etc.
- Changes in locations of potential pollutants
- Leaks or releases to the environment

1.1 Roles and Responsibilities

The PG&E Topock Site Operations Manager (Curt Russell) is the contact person for onsite operation as it relates to the remedy and this SWPPP. His contact info is listed in Exhibit 1-1 (IGP X.A.1).

EXHIBIT 1-1
SWPPP Team
Groundwater Remedy Industrial Storm Water Pollution Prevention Plan
PG&E Topock Compressor Station, Needles, California

Name/SWPPP Title	Roles/Responsibilities
PG&E, Curt Russell PG&E Topock Site Operations Manager, SWPPP Lead Office: (760) 326-5582 Mobile: (760) 791-5884	Lead for overseeing compliance with this SWPPP and ensuring that proper BMPs are implemented and maintained. May delegate some responsibilities to appropriately-trained personnel (e.g., preparation of SWPPP and revisions, implementation of BMPs, training, inspections, sampling, annual reports). Certifies SWPPP and SWPPP amendments. Current SWPPP and subsequent amendments are kept onsite.
CH2M HILL, Andrew Redmond Initial SWPPP Preparer	Preparation of draft and final SWPPP.
SWPPP Onsite Trainer, TBD	Conduct/oversee training of personnel. May train additional personnel to conduct training sessions.
Remedy Lead Operator, SWPPP Inspector, TBD	Responsible for visual observations of storm water discharges, and NSWDs, annual compliance evaluation inspection.
SWPPP Field Sampling Technicians Trained technicians, TBD	Responsible for collecting storm water samples and submittal to analytical laboratory.

The PG&E Topock Site Operations Manager, or his designee, is responsible for maintaining and updating this SWPPP, implementing the measures described herein, and performing the monitoring and sampling activities described. Table 2-1 in Section 2 contains additional information on the SWPPP Team (tables are located at the end of each section). Alternate team members may be identified by the PG&E Topock Site Operations Manager when regularly assigned team members are unavailable (IGP X.D.1.c).

[2] Remedy facilities inside the Compressor Station and the Compressor Station evaporation ponds are covered under the Compressor Station's exemption for utilities and gas operations.

SECTION 2

Facility and System Description

The groundwater remedy includes:

- An in situ reactive zone (IRZ) along the National Trails Highway (NTH) using a line of wells that may be used as both injection and extraction wells to circulate groundwater and distribute an organic carbon source to promote reduction of hexavalent chromium (Cr[VI]) to trivalent chromium (Cr[III]).
- An Inner Recirculation Loop (IRL) comprised of:
  - Extraction wells near the Colorado River (referred to as the River Bank Extraction Wells) to provide hydraulic capture of the plume, cleanup of the floodplain downgradient of the IRZ, enhance the flow of contaminated groundwater through the IRZ line, and control migration of IRZ-generated by-products.
  - Injection wells to re-inject groundwater extracted from the River Bank Extraction Wells, which may be amended with an organic carbon source, and/or fresh water in the upgradient portion of the Cr(VI) plume to flush the plume through the IRZ.
- A TCS Recirculation Loop comprised of:
  - East Ravine Extraction Wells in the eastern (downgradient) end of the East Ravine to provide hydraulic capture of contaminated groundwater in bedrock; and Transwestern (TW) Bench Extraction Wells in the area northeast of the TCS to accelerate capture of Cr(VI)-impacted groundwater from the alluvial deposits located downgradient of the TCS.
  - TCS Injection Wells located upgradient of the TCS for the re-injection of groundwater extracted from the East Ravine Extraction Wells and TW Bench Extraction Wells, which will be amended with an organic carbon source, to promote reduction of the Cr(VI) to Cr(III) and remove elevated Cr(VI) groundwater concentrations from the alluvial aquifer in the vicinity of the TCS.
- Injection of fresh water to control and confine the plume migration to the west, to assist with flushing the chromium plume through the NTH IRZ, and to constrain westward spread of carbon-amended water and in situ byproducts from the Inner Recirculation Loop.
- A network of monitoring wells to monitor the effectiveness of the groundwater treatment system.

The groundwater remedy also includes supporting features that are needed to make the remedy effective and safe over its projected decades-long operation. The key supporting features include a Remedy-produced Water Conditioning System located inside the Compressor Station to manage wastewater produced from operations and maintenance (O&M) of the remedy (e.g., maintenance of wells and piping, sampling and monitoring of wells), improvements at the Compressor Station evaporation ponds to support long-term wastewater management, utilities (e.g., power supply for the remedy and distribution conduits, communication and data network, fire water), site safety and security (e.g., alarms, gates/fences, security cameras), access roads for installation and long-term O&M needs, an Operations building at the TW Bench to house site operation and field staff as well as essential O&M functions (e.g., remote control and monitoring equipment/telecom/ information technology, Supervisory Control and Data Acquisition [SCADA] system), and a long-term remedy support area at Moabi Regional Park that will house a laboratory, a document repository center, a training/ conference room, equipment storage, etc. as well as soil storage areas. Figures 2 and 3 show the overall remedy facilities layout.

This SWPPP covers the substantive requirements related to remedy facilities located outside of TCS and Compressor Station evaporation ponds including facilities located on the TW Bench, the MW-20 Bench, and at Moabi Regional Park.

Operation and maintenance activities associated with the groundwater remedy typically comprise of the following categories:

- Remedy facilities operation and maintenance
- Well maintenance and decommissioning
- Pipeline operation and maintenance
- Sampling and monitoring
- Access route and pathway maintenance
- Waste management
- Soil storage
- Contingency plan
- Emergency response

In general, the remedy is staffed during regular business hours (Section X.D.2.d of the IGP). The automated remediation system can operate 24 hours per day while unattended. Section 3 discusses the O&M activities in details.

2.1 List of Industrial Materials

Table 2-1 lists materials associated with remedy processes that could potentially contribute pollutants to storm water and non-storm water discharges. It includes the raw groundwater, chemicals used for well rehabilitation, chemicals used to treat remedy-produced water, lubricants, and maintenance chemicals. Also included are information related to storage, receiving and shipping, as well as handling locations, along with typical quantity and frequency. It is anticipated that information in this list will be completed and updated as remedy operations progress. The PG&E Topock Site Operations Manager or his designee will be responsible for maintaining an updated list at the site.

TABLE 2-1
List of Industrial Materials
Groundwater Remedy Industrial Storm Water Pollution Prevention Plan
PG&E Topock Compressor Station, Needles, California

Material/Physical Characteristic	Storage Location	Shipping/Receiving Location	Handling Location	Typical Quantity	Frequency
Untreated groundwater with total chromium or arsenic concentrations of 5 mg/L or more	Select IRZ wells, MW-20 Bench *(see Figure 2 for approximate locations of remediation wells, Figure 6 for carbon amendment building and storage tank on the MW-20 Bench)*	Produce at well-heads	Above ground at well heads	TBD	During remedy operations and well sampling
Carbon substrate (e.g., Ethanol) in liquid form	MW-20 Bench *(see Figure 6 for approximate location of carbon amendment building and carbon storage tank on the MW20 Bench)*	MW-20 Bench	MW-20 Bench, Aboveground at well heads	15,000-gallon storage tank at MW-20 Bench TBD at well heads	Intermittent
Well maintenance and rehabilitation reagents[a] (mostly in liquid form, carbon dioxide in gaseous form)	Brought onsite during well maintenance/rehabilitation activities, but will not be permanently stored on site *(see Figure 2 for approximate locations of remediation wells that may require maintenance and rehabilitation)*	In the vicinity of the well to be rehab, MW-20 Bench, TW Bench, Long-term remedy support area at Moabi Regional Park	In the vicinity of the well to be rehab	TBD	During well rehabilitation operations
Remedy-produced water with pH<2 (from well maintenance activities)	None	Produce at well-heads	At well-heads	TBD	During well rehabilitation operations
Remedy-produced water to be hauled off-site (if needed)	MW-20 Bench (*see Figure 6 for approximate location of truck loading/unloading station at the MW-20 Bench)*	MW-20 Bench	MW-20 Bench	TBD	Intermittent
Oil for pumps and equipment	Long-term remedy support area at Moabi Regional Park, TW Bench, MW-20 Bench *(see Figures 5-7 for approximate facility locations)*	Long-term remedy support area at Moabi Regional Park, TW Bench, MW-20 Bench	Long-term remedy support area at Moabi Regional Park, TW Bench, MW-20 Bench	TBD	Intermittent
Used oil hazardous waste	Long-term remedy support area at Moabi Regional Park, TW Bench, MW-20 Bench *(see Figures 5-7 for approximate facility locations)*	Long-term remedy support area at Moabi Regional Park, TW Bench, MW-20 Bench	Long-term remedy support area at Moabi Regional Park, TW Bench, MW-20 Bench	TBD	Intermittent
Solvents used for pumps and equipment	Long-term remedy support area at Moabi Regional Park, TW Bench, MW-20 Bench *(see Figures 5-7 for approximate facility locations)*	Long-term remedy support area at Moabi Regional Park, TW Bench, MW-20 Bench	Long-term remedy support area at Moabi Regional Park, TW Bench, MW-20 Bench	TBD	Intermittent
Used solvents hazardous waste	Long-term remedy support area at Moabi Regional Park, TW Bench, MW-20 Bench *(see Figures 5-7 for approximate facility locations)*	Long-term remedy support area at Moabi Regional Park, TW Bench, MW-20 Bench	Long-term remedy support area at Moabi Regional Park, TW Bench, MW-20 Bench	TBD	Intermittent
Laboratory reagents and associated waste (mostly in liquid form)	Onsite laboratory/sample processing at Moabi Regional Park *(see Figure 7 for approximate location of the long-term remedy support area where the onsite laboratory will be located)*	Onsite laboratory/sample processing at Moabi Regional Park	Onsite laboratory/sample processing at Moabi Regional Park	TBD	Intermittent
Compressed gas cylinders	Long-term remedy support area at Moabi Regional Park, TW Bench, MW-20 Bench *(see Figures 5-7 for approximate facility locations)*	Long-term remedy support area at Moabi Regional Park, TW Bench, MW-20 Bench	Long-term remedy support area at Moabi Regional Park, TW Bench, MW-20 Bench, Aboveground at well heads	TBD	Intermittent
Universal waste (batteries, electronic devices, lamps, aerosol cans, and mercury-containing equipment)	Long-term remedy support area at Moabi Regional Park, TW Bench, MW-20 Bench *(see Figures 5-7 for approximate facility locations)*	Long-term remedy support area at Moabi Regional Park, TW Bench, MW-20 Bench	Long-term remedy support area at Moabi Regional Park, TW Bench, MW-20 Bench	TBD	Intermittent
Acids, caustics, and/or dispersants[b] for use in the Clean-In-Place system and associated waste	MW-20 Bench *(see Figure 6 for location of the carbon amendment building in which the CIP system is located)*	MW-20 Bench	MW-20 Bench	330-gallon totes or smaller-volume drums	Intermittent
Soil stabilization agents (e.g., SoilTac[R], Gorilla Snout) (in liquid form)	Long-term remedy support area at Moabi Regional Park *(see Figure 7 for approximate facility location)*	Long-term remedy support area at Moabi Regional Park	Site locations where soil stabilization are needed	TBD	Intermittent
Water and sediments from pipeline maintenance	Along pipeline conveyance system *(see Figure 2 for general pipeline routes and locations)*	Vaults for maintenance along pipeline	TW Bench, MW-20 Bench, vaults for maintenance along pipeline	TBD	Intermittent
Sanitary waste	Septic tanks at TW Bench and Long-term remedy support area at Moabi Regional Park	TW Bench and Long-term remedy support area at Moabi Regional Park	TW Bench and Long-term remedy support area at Moabi Regional Park	Two 10,000-gallon buried plastic tanks at Moabi Regional Park One 10,000-gallon buried plastic tank at TW Bench	Intermittent

TABLE 2-1
List of Industrial Materials
Groundwater Remedy Industrial Storm Water Pollution Prevention Plan
PG&E Topock Compressor Station, Needles, California

Material/Physical Characteristic	Storage Location	Shipping/Receiving Location	Handling Location	Typical Quantity	Frequency
Empty drums, cans, unused chemicals, paints, etc.	Long-term remedy support area at Moabi Regional Park, TW Bench, MW-20 Bench *(see Figures 5-7 for approximate facility locations)*	Long-term remedy support area at Moabi Regional Park, TW Bench, MW-20 Bench	Long-term remedy support area at Moabi Regional Park, TW Bench, MW-20 Bench	TBD	Intermittent

Notes:

TBD – To Be Determined as O&M activities progress.

[a] Well Maintenance and rehabilitation reagents (e.g., hydrochloric acid, sulfamic acid, sulfuric acid, phosphoric acid, hydroxyacetic acid, acetic acid, citric acid, oxalic acid, ascorbic acid, hydrogen peroxide, sodium hypochlorite, sodium hydroxide, chlorine dioxide, potassium hydroxide, polyphosphate, Aqua Clear™ PFD, Rodine-103/Rodine 213, QC-21, CB4, NuWell 120, NuWell 130, nitrogen, and carbon dioxide). See also Exhibit 4.2-5 of the O&M Plan for a summary of available chemicals for well rehabilitation applications.

[b] Potential chemical reagents for use in the CIP system may include hydrochloric, glycolic (hydroxyacetic), and phosphoric acids, sodium hydroxide, and hydrogen peroxide. See also Exhibit 5.1-1 of the O&M Plan for a summary of available chemicals for Clean-In-Place system.

SECTION 3

Activities Assessment and Identification of Potential Pollutant Sources

This section assesses the activities associated with operation and maintenance of the groundwater remedy, and identifies potential pollutant sources (see Table 3-1).

TABLE 3-1
Summary of Activities Assessment and Identification of Potential Pollutant Sources
Groundwater Remedy Industrial Storm Water Pollution Prevention Plan
PG&E Topock Compressor Station, Needles, California

Remedy O&M Activities Category	Description of Activity* Relevant to this SWPPP (refer to Figures 2-7 for approximate locations of facilities)	Identification of Potential Pollutant Sources
Operation of Remedy and Support Facilities	Normal operation of the remedy facilities – remedy facilities include remediation wells and pipelines, carbon (ethanol) storage, carbon amendment facilities, conveyance piping, etc. Normal operation of support facilities – support facilities include power supply and distribution system, Operations building at TW Bench, truck loading/off-loading stations at the TW Bench/MW-20 Bench/Moabi Regional Park, onsite laboratory/sample processing at Moabi Regional Park, equipment maintenance facility at Moabi Regional Park, etc.	See Table 2-1.
Well Maintenance and Decommissioning*	Routine maintenance that can be conducted without intrusive modifications to the wellhead or well includes regular surging and pumping techniques. A more aggressive routine maintenance technique uses AquaGard that injects cryogenic liquid carbon dioxide (CO_2) into existing well access tubes and requires all or some of the following: a CO_2 injection trailer, CO_2 storage vessel, support truck, pump rig and/or crane (if a pump or pipe needs to be installed/removed), and a support truck. Nonroutine maintenance includes intrusive methods requiring removal of existing equipment from well and includes drop-pipe replacement; submersible pump repair/replacement; and well repair and well rehabilitation methods. Depending on the specific plan for well rehabilitation, some or all of the following equipment may be required: a pump rig and/or crane, support or pipe truck, generator(s), air compressor, chemical trailer (mixing tanks and pumps), neutralization trailer (mixing tanks and pumps), support truck, video van, vacuum or tanker truck, forklift, and 20,000-gallon frac tanks.	See Table 2-1.
Pipeline Maintenance*	A Clean-In-Place (CIP) system located at the MW-20 Bench will operate as a closed loop system to remove biological films and mineral scale deposits within remedy pipelines. Spent CIP solutions will be collected and managed as liquid wastes. Maintenance vaults are designed for removal of potential blockages and solids that may settled in the piping network. Water and sediments from the vaulta will be containerized and transported offsite or to the influent tanks of the frac tanks at the MW-20 Bench, or the TW Bench. Aboveground pipeline will need to be periodically repainted for upkeep and aesthetic reasons.	See Table 2-1.
Access Route and Pathway Maintenance*	Access routes and footpaths are expected to deteriorate over time, so maintenance activities will be required and will be tailored to the specific cause and repair need. For footpaths, pruning of overgrowth will be done using hand tools or mechanical-powered tools. Soil stabilization for disturbed areas may be accomplished by applying approved soil stabilizing agents (e.g., SoilTac), erosion control matting, silt fencing, etc.	See Table 2-1.
Waste Management	Management of different waste streams include wastes from the CIP system, used PPE, laboratory wastes, universal wastes, pipeline maintenance wastes, etc. Designated waste management areas are located at the TW Bench, MW-20 Bench, and Moabi Regional Park (Figure 4).	See Table 2-1.
Clean Soil Storage	Storage of clean soil (i.e., displaced soil that is nonhazardous and is suitable for final disposition onsite because contaminants are present below the interim screening level or the project-specific soil cleanup goals [once established]).	See Soil Management Plan (Volume 4 of the O&M Manual).
Sampling and Monitoring	The Sampling and Monitoring Plan (Volume 2 of the O&M Manual) describes the sampling and monitoring program for the remedy which includes groundwater and surface water sampling, and process sampling. The sample locations, analytes, and frequencies will be adapted in an ongoing manner to meet the needs of the remedy.	See Table 2-1.
Contingency Plan*	Contingency planning has been prepared for five key elements of the groundwater remedy: In-Situ Remediation System, Remedy-produced Water Management System, Freshwater Supply, Power Supply, and Remedy SCADA System. Contingency plan includes the Contingent Freshwater Pre-injection Treatment System and the Dissolved Metals Removal System. These systems would be located inside TCS if needed.	See O&M Contingency Plan (Volume 3 of the O&M Manual).
Emergency Response	The project-specific Health and Safety Plan and HMBPs identify the project emergency response procedures and equipment, including emergency response contacts and phone numbers.	See project-specific Hazardous Material Business Plans (HMBPs) (Appendix E of the O&M Plan) and Health and Safety Plan (Volume 5 of the O&M Manual)

Note:

*These activities will likely generate dust (IGP X.G.1.c).

SECTION 4

Best Management Practices

This section identifies site-specific best management practices (BMPs) to reduce or prevent pollutants from being released in storm water discharges and/or authorized NSWDs that may affect receiving water quality. Authorized NSWDs include potable water, fire hydrant testing, discharge of materials and release of hazardous materials/waste into secondary containment areas that is not released to the environment, etc.

4.1 Minimum BMPs

The following are the minimum BMPs consistent with Section X.H.1 of the 2015 IGP (see Appendix A), the BMPs applicability is discussed in Table 4-1:

Good Housekeeping, including:

- Observe all outdoor areas associated with industrial activity; including storm water discharge locations, drainage areas, conveyance systems, waste handling/disposal areas, and perimeter areas impacted by off-facility materials or storm water run-on to determine housekeeping needs. Clean and dispose of properly any identified debris, waste, spills, tracked materials, or leaked materials;
- Minimize or prevent material tracking;
- Minimize dust generated from industrial materials or activities;
- Ensure that all facility areas impacted by rinse/wash waters are cleaned as soon as possible;
- Cover all stored industrial materials that can be readily mobilized by contact with storm water;
- Contain all stored non-solid industrial materials or wastes that can be transported or dispersed via by the wind or contact with storm water;
- Prevent disposal of any rinse/wash waters or materials into the storm water conveyance system;
- Minimize storm water discharges from non-industrial areas (e.g., storm water flows from employee parking area) that contact industrial areas of the facility; and
- Minimize authorized NSWDs from non-industrial areas (e.g., potable water, fire hydrant testing, etc.) that contact industrial areas of the facility.

Preventive Maintenance, including:

- Identify all equipment and systems used outdoors that may spill or leak pollutants;
- Observe the identified equipment and systems to detect leaks, or identify conditions that may result in the development of leaks;
- Establish schedule for maintenance of identified equipment and systems; and
- Establish procedures for prompt maintenance and repair of equipment, and maintenance of systems when conditions exist that may result in the development of spills or leaks.

Material Handling and Waste Management, including:

- Prevent or minimize handling of industrial materials or wastes that can be readily mobilized by contact with storm water during a storm event;
- Contain all stored non-solid industrial materials or wastes that can be transported or dispersed by the wind, erosion or contact with storm water during handling;
- Cover industrial waste disposal containers and industrial material storage containers that contain industrial materials when not in use;

- Divert run-on and storm water generated from within the facility away from all stockpiled materials;
- Clean all spills of industrial materials and/or wastes that occur during handling; and
- Observe and clean as appropriate, any outdoor material/ or waste handling equipment or containers that can be contaminated by contact with industrial materials or wastes.

Erosion and Sediment Controls, including:

- Implement effective wind erosion controls;
- Provide effective stabilization for inactive areas, finished slopes, and other erodible areas prior to a forecasted storm event;
- Maintain effective perimeter controls and stabilize all site entrances and exits to sufficiently control discharges of erodible materials from discharging or being tracked off the site;
- Divert run-on and storm water generated from within the facility away from all erodible materials; and
- If sediment basins are implemented, ensure compliance with the design storm standards in Section X.H.6.

Employee Training Program, including:

- Ensure that all team members implementing the various compliance activities of the SWPPPP are properly trained to implement the requirements of the IGP, including but not limited to: BMP implementation, BMP effectiveness evaluations, visual observations, and monitoring activities. If the remedy enters Level 1 status, all appropriate team members shall be trained by a Qualified Industrial Stormwater Practitioner (QISP);
- Prepare or acquire appropriate training manuals or training materials;
- Identify which personnel need to be trained, their responsibilities, and the type of training they will receive;
- Provide a training schedule; and
- Maintain documentation of all completed training classes and the personnel that received training in the SWPPP.

Quality Assurance and Record Keeping, including:

- Develop and implement management procedures to ensure that appropriate staff implements all elements of the SWPPP, including the Monitoring Implementation Plan (MIP, see Section 5).
- Develop a method of tracking and recording the implementation of BMPs identified in the SWPPP.
- Maintain the BMP implementation records, training records, and records related to any spills and clean-up related response activities for a minimum of five years.

4.2 Advanced BMPs

The 2015 IGP requires that the site, to the extent feasible, implement and maintain any advanced BMPs necessary to reduce or prevent discharges of pollutants in its storm water discharge in a manner that reflects best industry practice considering technological availability and economic practicability and achievability. Advanced BMPs may include:

- Exposure Minimization BMPs (such as storm resistant shelters that prevent the contact of storm water with the industrial materials or areas of industrial activity)
- Storm Water Containment and Discharge Reduction BMPs that divert, infiltrate, reuse, contain, retain, or reduce the volume of storm water runoff
- Treatment Control BMPs (the implementation of one or more mechanical, chemical, biologic, or any other treatment technology)

Advanced BMPs for the groundwater remedy included in the 90% design are:

- Storm resistant shelters (i.e., buildings) for Operations at the TW Bench, Hazardous Materials storage at the TCS, and Carbon Amendment facilities at the MW-20 Bench
- Storm water drainage at the TW Bench to divert storm water run on and reduce the volume of storm water runoff.
- Drainage features in access roads to reduce erosion and divert storm water from remedy facilities such as wells and associated control equipment.

4.3 Temporary Suspension of Activities

If PG&E suspends industrial activities related to the remedy for ten or more consecutive calendar days during a reporting year, then the remedy may also suspend monitoring if it is infeasible to conduct monitoring while industrial activities are suspended. In the event of a temporary suspension of activities for more than 10 days during which it is infeasible to continue to perform monitoring, PG&E will prepare an addendum to the SWPPP specifying BMPs that will be implemented during the suspension to stabilize the site and will implement those BMPs prior to suspending monitoring activities.

TABLE 4-1
Summary of Site-Specific BMPs
Groundwater Remedy Industrial Storm Water Pollution Prevention Plan
PG&E Topock Compressor Station, Needles, California

Area	Activity	Potential Pollutant Source(s)	Potential Pollutant(s)	Best Management Practices
Site-wide	Operation and Maintenance	Examples: vehicle/equipment leaks and drips, or vandalism.	Motor oil, hydraulic oil, diesel fuel, gasoline, solvents	Training, inspections, annual evaluation, ensure vehicles/ equipment are in good working order and undergo regularly scheduled maintenance. Observe delivery and pickup vehicles that access the site. Park and refuel vehicles/equipment over portable drip containment pads. Cover all stored industrial materials that can be readily mobilized by contact with storm water. Prevent disposal of any rinse/wash waters or industrial materials into the storm water conveyance system. Maintain effective perimeter controls and stabilize site entrances and exits to sufficiently control discharges of erodible materials from discharging or being tracked off the site.
Site-wide	Vehicular Movement and Soil Erosion	Examples: incidental leakage from vehicles, dust and particulate generation from moving vehicles	Motor oil, diesel fuel, gasoline, radiator fluid	Good housekeeping, preventive maintenance, inspections, training, and following posted speed limit. Control track-out. Particulate matter generated during vehicular movement to be mitigated by utilizing water buffalo or water truck to suppress any particulates from crossing property boundaries.
Conveyance pipeline	Groundwater Extraction, Conveyance, and Injection	Examples: break in pipe, tanks, leaking valve, well vaults	Groundwater with Cr(VI) concentrations greater than 5.0 mg/L	Well vaults and piping air release valves have sealed containment.
Wells	Well Maintenance	Examples: incidental leakage from vehicles, dust and particulate generation from moving vehicles, release form hoses or containers during back-flushing and/or acid solution rehabilitation	Acids (some with dispersants), oxidizing agents (hydrogen peroxide, chlorine); biocides, and chelating agents	Training, inspections, good housekeeping. Conduct observation during back-flushing and/or acid solution rehabilitation events. Place portable containment pads under temporary equipment (e.g., generators, containers, vacuum trucks).

TABLE 4-1
Summary of Site-Specific BMPs
Groundwater Remedy Industrial Storm Water Pollution Prevention Plan
PG&E Topock Compressor Station, Needles, California

Area	Activity	Potential Pollutant Source(s)	Potential Pollutant(s)	Best Management Practices
TW Bench/MW-20 Bench/Long-term Remedy Support Area	Loading and unloading activities	Examples: incidental leaks of oil, hydraulic fluid, lubricant, etc. from 3rd party delivery/service trucks and forklift during loading/ unloading	Ethanol, Well Maintenance and rehabilitation reagents	Good housekeeping, preventive maintenance, inspections, training in unloading/loading and forklift procedures, inspections. Observation of unloading and loading activities to detect spills or improper handling. Proper use of secondary containment. Material shipping and receiving is performed with two personnel at all times. Example: Operator and spotter directing via hand signals or other. Cover all stored industrial materials that can be readily mobilized by contact with storm water.
TW Bench, MW-20 Bench	Carbon amendment operations	Examples: leaks associated with carbon amendment storage and deliveries	Carbon	Good housekeeping, preventive maintenance, inspections, training, and observing removal of sump contents for possible spills/leaks. Carbon amendment building is covered and enclosed.
Clean Soil Storage Area at Moabi Regional Park	Soil storage, loading and unloading activities	Examples: incidental leakage from vehicles, dust and particulate generation from moving vehicles and soil	Soil/Total Suspended Solid (TSS) in runoff	Training, inspections, good housekeeping. No uncovered equipment storage other than the soil/aggregate separator. Place straw wattles around soil and aggregate storage piles to prevent storm water run-on and run-off. Use wooden stakes to keep wattles in place. Cover piles or spray with cohesive agent prior to rain events. Prevent disposal of any rinse/wash waters or industrial materials into the storm water conveyance system. Utilize watering (i.e., with water buffalo) for dust mitigation during intrusive soil disturbance.
Remediation Wells	Ethanol application	Ethanol application	Ethanol	Good housekeeping, preventive maintenance, inspections, and training
Access Roads and Pathways	Vehicle movement, road maintenance	Example: Storm water run on/off gathering TSS	Erosion, TSS	Drainage features in access roads to reduce erosion and divert storm water from remedy facilities such as wells and associated control equipment
NSWDs	Allowable NSWDs	Example: air conditioning condensate, potable water, fire hydrant testing	Machine oil in air conditioner	Good housekeeping, preventive maintenance, inspections, and training

SECTION 5

Monitoring Implementation Plan

The Monitoring Implementation Plan (MIP) describes the visual observations, frequency, locations, and documentation as required by the IGP. The SWPPP team will evaluate results recorded from the visual observations and determine if adjustments to the BMPs and/or SWPPP amendments, if any, are needed (IGP Section I).

Monthly Visual Observations

At least once per calendar month, visually observe each drainage area (see Table 5-1 for a list of potential discharge locations) for the following:

- The presence or indications of prior, current, or potential unauthorized NSWDs and their sources.
- Authorized NSWDs, sources, and associated BMPs.
- Outdoor industrial equipment and storage areas, outdoor industrial activities areas, BMPs, and all other potential source of industrial pollutants.
- The monthly visual observations will be conducted during daylight hours of scheduled facility operating hours and on days without precipitation.

Sampling Event Visual Observations

- Sampling event visual observations will be conducted at the same time sampling occurs at a discharge location. At each discharge location where a sample is obtained, onsite sampling technician will observe the discharge of storm water associated with industrial activity.
- Ensure that visual observations of discharge from contained storm water, and corresponding documentation, discharged from containment sources (e.g. secondary containment or storage ponds) are conducted at the time that the discharge is sampled.
- Visually observe and record the presence or absence of floating and suspended materials, oil and grease, discolorations, turbidity, odors, trash/debris, and source(s) of any discharged pollutants.
- In the event that a discharge location is not visually observed during the sampling event, record which discharge locations were not observed.

TABLE 5-1
Potential Discharge Locations
Groundwater Remedy Industrial Storm Water Pollution Prevention Plan
PG&E Topock Compressor Station, Needles, California

ID	Location	Comments
TW-SW1	TW Bench (Figure 5)	On-site sampling technician to observe surface water flow to determine precise sampling location
MW20-SW1	MW-20 Bench (Figure 6)	On-site sampling technician to observe surface water flow to determine precise sampling location
PM-SW1, SW2	Clean Soil Storage/Long-term Remedy Support Area at Moabi Regional Park (Figure 7)	On-site sampling technician to observe surface water flow to determine precise sampling location

Notes:
The TCS is exempt from SWPPP requirements, therefore, no storm water samples will be collected within the TCS boundary.

SECTION 6

Sampling and Analysis Plan

The sampling and analysis plan (SAP) describes the sampling and analysis of storm water samples from qualified storm events (QSEs), and comparison to applicable Numeric Action Levels. The SAP also includes an Annual Evaluation as required by the IGP.

- Collect and analyze storm water samples from two QSEs within the first half of each reporting year (July 1 to December 31), and two QSEs within the second half of each reporting year (January 1 to June 30). A QSE is defined as a precipitation event that produces a discharge for at least one drainage area and is preceded by 48 hours with no discharge from any drainage area. A potential list of discharge locations is presented in Table 5-1.
- Samples from each discharge location will be collected within 4 hours of the start of the discharge, or the start of facility operations if the QSE occurs within the previous 12-hour period (e.g., for storms with discharges that begin during the night for facilities with daytime operating hours). Sample collection is required during scheduled facility operating hours and when sampling conditions are safe.
- Samples will be analyzed for the following parameters (this may be modified as needed by the PG&E Site Manager to achieve the objectives of the SWPPP while maintaining compliance with the IGP):
  - Total suspended solids (TSS)
  - Oil and grease (O&G)
  - pH

6.1 Comparison to Applicable Numeric Action Levels and Exceedance Response Actions

The IGP contains annual and instantaneous maximum NALs. The applicable NALs for the groundwater remedy are listed in Table 6-1.

The Colorado River is the receiving water at Topock, specifically the Colorado River and Associated Lakes and Reservoirs (California-Nevada border to Lake Havasu). A listing of impaired water bodies in California is provided online at the SWRCB: http://www.waterboards.ca.gov/water_issues/programs/tmdl/integrated2010.shtml. This section of the Colorado River is not listed on the Impaired Water Bodies 303(d) list for any parameters.

At the beginning of IGP coverage, the groundwater remedy has baseline status for all parameters. The Baseline status for any given parameter will change to Level 1 status if sampling results indicate an NAL exceedance for that parameter in any subsequent reporting year (July 1 to June 30). Level 1 status for any parameter will change to Level 2 status if sampling results indicate an NAL exceedance in any subsequent reporting year for the same parameter while the Discharger is in Level 1. Level 2 status will commence on July 1 following the reporting year during which the NAL exceedance(s) occurred. See Section XII of the 2015 IGP for NAL exceedance response actions (ERAs) required under Level 1 and Level 2 status as well as actions and sampling results that would return the facility to baseline status.

TABLE 6-1
Applicable Numeric Action Levels (NALs)
Groundwater Remedy Industrial Storm Water Pollution Prevention Plan
PG&E Topock Compressor Station, Needles, California

Parameter	Test Method	Reporting Units	Annual NAL	Instantaneous Maximum NAL
pH	See Topock Program Quality Assurance Project Plan (QAPP[1])	pH units	N/A	Less than 6.0, greater than 9.0
TSS	See QAPP[1]	mg/L	100	400
O&G, Total	See QAPP[1]	mg/L	15	25

Notes:

[1] The QAPP is included Appendix B of the Sampling and Monitoring Plan (Volume 2 of the O&M Manual).

For annual NALs, an exceedance occurs when the average of all analytical results from all samples taken during a reporting year for a given parameter exceeds an annual NAL value. For the instantaneous maximum NALs, an exceedance occurs when two or more analytical results from samples taken for any parameter within a reporting year exceed the instantaneous maximum NAL value (for TSS and O&G), or are outside of the instantaneous maximum NAL range (for pH).

6.2 Annual Evaluation

The 2015 IGP requires that one Annual Evaluation will be conducted for each reporting year (July 1 to June 30). The Annual Evaluation will be conducted no fewer than 8 months and no more than 16 months following the previous Annual Evaluation. The Annual Evaluation will consist of:

- A review of all sampling, visual observation, and inspection and monitoring records and sampling and analysis results conducted during the previous reporting year
- A visual inspection of all areas of industrial activity and associated potential pollutant sources for evidence of, or the potential for, pollutants entering the storm water conveyance system
- A visual inspection of all drainage areas previously identified as having no exposure to the groundwater remedy industrial activities and materials
- A visual inspection of equipment needed to implement the BMPs
- A visual inspection of any BMPs
- A review and effectiveness assessment of all BMPs for each area of industrial activity and associated potential pollutant sources to determine if the BMPs are properly designed, implemented, and are effective in reducing and preventing pollutants in industrial storm water discharges and authorized NSWDs
- An assessment of any other factors needed to comply with the requirements in IGP Section XVI.B.

PG&E will revise the SWPPP as appropriate and implement revisions within 90 days of the Annual Evaluation.

SECTION 7

Reporting

Annual reports include a summary and evaluation of all sampling and analysis results, original laboratory reports, and chain of custody forms, a summary of all corrective actions taken during the compliance year, and identification of any compliance activities or corrective actions that were not implemented.

Annual reporting is a requirement of permitted SWPPP documents and reports are submitted electronically through SMARTs. Because this is not a permitted SWPPP, the annual reports will not be submitted through SMARTs. The annual reports will be submitted to DTSC (as required by HYDRO-1) and DOI.

SECTION 8

Training

8.1 Training Requirements

Individuals with roles related to this SWPPP will be trained commensurate with their responsibilities. This includes personnel:

- Responsible for overseeing compliance with the conditions of the IGP and the components of this SWPPP
- Responsible for preparing, revising, and amending this SWPPP
- Responsible for preparing and submitting reports required under the General Permit
- Responsible for installation, inspection, maintenance, and repair of BMPs
- Responsible for collection and management of storm water samples and performing visual observations under the MIP
- Responsible for managing hazardous materials at the site (e.g., unloading of treatment chemicals, operation of the treatment system)

Initial and annual refresher training will be provided. The PG&E Topock Site Operations Manager (Curt Russell) and Site Compliance Lead (Chris Smith) will be responsible for track training and maintain copies of training materials, required training for each staff member with SWPPP responsibilities, records of completed training classes, and personnel receiving training.

8.2 Training Documentation

All SWPPP training sessions will be documented. An example training documentation form is shown in Exhibit 8-1. The example training form can be adjusted for use onsite by the PG&E Topock Site Operations Manager.

EXHIBIT 8-1
Example SWPPP Training Form
Groundwater Remedy Industrial Storm Water Pollution Prevention Plan
PG&E Topock Compressor Station, Needles, California

PG&E Topock Compressor Station

Groundwater Remedy O&M

SWPPP Training

Date: _____ **Trainer:** _____

ATTENDEE (PRINT)	TITLE	SIGNATURE	DATE

SECTION 9

Signed Certification

I certify under penalty of law that this document and all attachments were prepared under my direction or supervision in accordance with a system designed to assure that qualified personnel properly gather and evaluate the information submitted. Based on my inquiry of the person or persons who manage the system or those persons directly responsible for gathering the information, the information submitted is to the best of my knowledge and belief, true, accurate, and complete.

I am aware that there are significant penalties for submitting false information, including the possibility of fine and imprisonment for knowing violations.

Name

Curt Russell

Signature

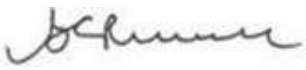

Title

PG&E Topock Site Operations Manager
Pacific Gas and Electric Company

Date

November 18, 2015

Figures

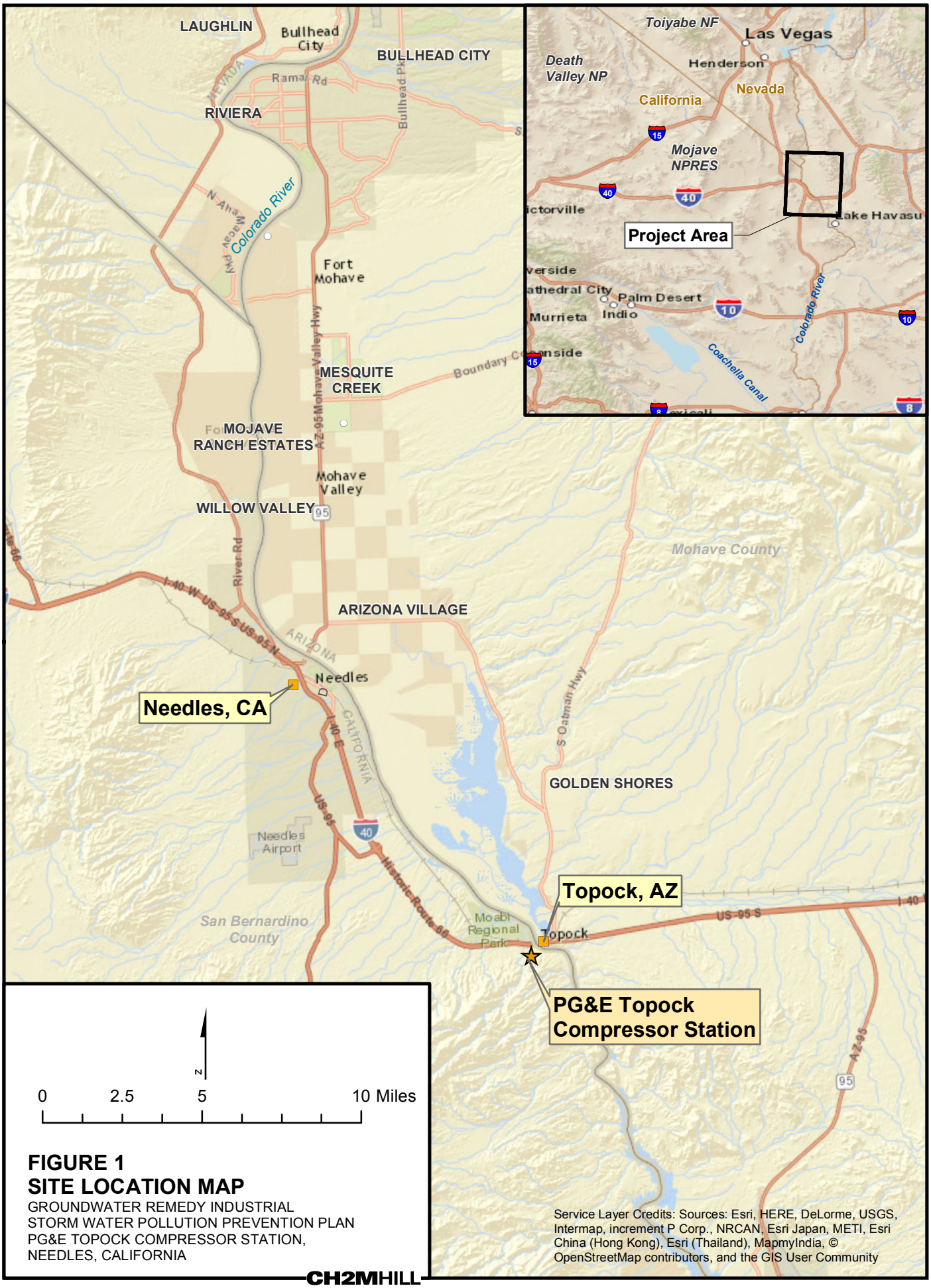

FIGURE 1
SITE LOCATION MAP
GROUNDWATER REMEDY INDUSTRIAL
STORM WATER POLLUTION PREVENTION PLAN
PG&E TOPOCK COMPRESSOR STATION,
NEEDLES, CALIFORNIA

Service Layer Credits: Sources: Esri, HERE, DeLorme, USGS, Intermap, increment P Corp., NRCAN, Esri Japan, METI, Esri China (Hong Kong), Esri (Thailand), MapmyIndia, © OpenStreetMap contributors, and the GIS User Community

CH2MHILL

Path: R:\PGEAlliance\Topock\MapFiles\2015\SWPPP\SWPPP_Fig1.mxd Date Saved: 10/13/2015 10:05:59 AM

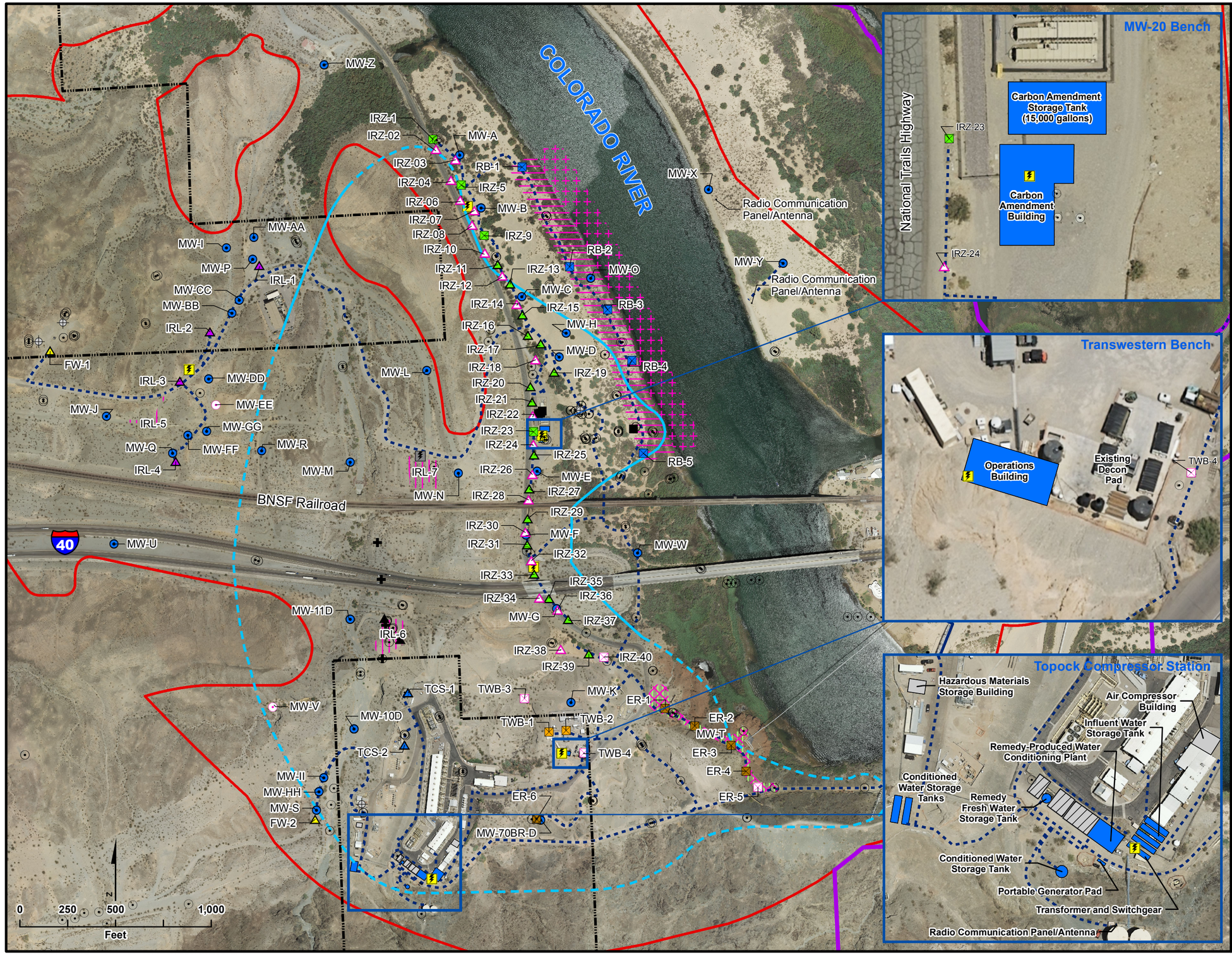

LEGEND

- Property Boundaries
- Area of Potential Effects (APE)
- EIR Project Area

Existing Wells:

- Extraction Well
- Injection Well
- Monitoring Well
- Water Supply Well

Provisional Wells:

(Items in Pink are Provisional)

- Extraction Well
- Injection Well
- Monitoring Well
- Area for East Ravine (ER) Well (ER-7 to ER-11)
- Area for Potential Slant Well Screens
- Area for Inner Recirculation Loop (IRL) Wells
- Area for River Bank Extraction Wells

Planned Wells:

- Extraction, East Ravine
- Extraction, National Trails Highway (NTH) In-situ Reactive Zone (IRZ)
- Extraction, Riverbank
- Extraction, Transwestern Bench
- Injection, Freshwater
- Injection, Inner Recirculation Loop
- Injection, NTH IRZ
- Injection, Topock Compressor Station
- Remedy Monitoring Well
- Recirculation Well
- Area for Monitoring Well MW-T

Pipeline Corridor for Remedy

- Aboveground Pipe
- Underground Pipe/Conduit

Remedy Facilities

- Planned Transformer
- Future Provisional Transformer
- Proposed Remedy Structure
- Contingent Freshwater Pre-injection Treatment System
- New Compressor Station buildings (not part of Remedy)
- Approximate extent of hexavalent chromium [Cr(VI)] concentrations exceeding 32 micrograms per liter (µg/L) at any depth ingroundwater based on fourth quarter 2013 sampling events. Dashed where based on limited data.

Note:

1. Note that in compliance with EIR mitigation measure CUL-1a-9, as well as PA and CHPMP mitigation measures, the pipeline along the dirt road west of National Trails Hwy is located in an existing, previously disturbed, access road. In addition, the location of the road and pipeline was field verified and does not create any direct physical impact or effect on the Topock Maze, as it is manifested archaeologically, in compliance with EIR mitigation measure CUL-1a-10, PA, and CHPMP mitigation measures.
2. All well and structure locations are approximate.

FIGURE 2
GENERAL REMEDY SYSTEM LAYOUT

GROUNDWATER REMEDY INDUSTRIAL
STORM WATER POLLUTION PREVENTION PLAN
PG&E TOPOCK COMPRESSOR STATION,
NEEDLES, CALIFORNIA

CH2MHILL

Path: R:\PGEAlliance\Topock\MapFiles\2015\SWPPP\SWPPP_Fig2.mxd

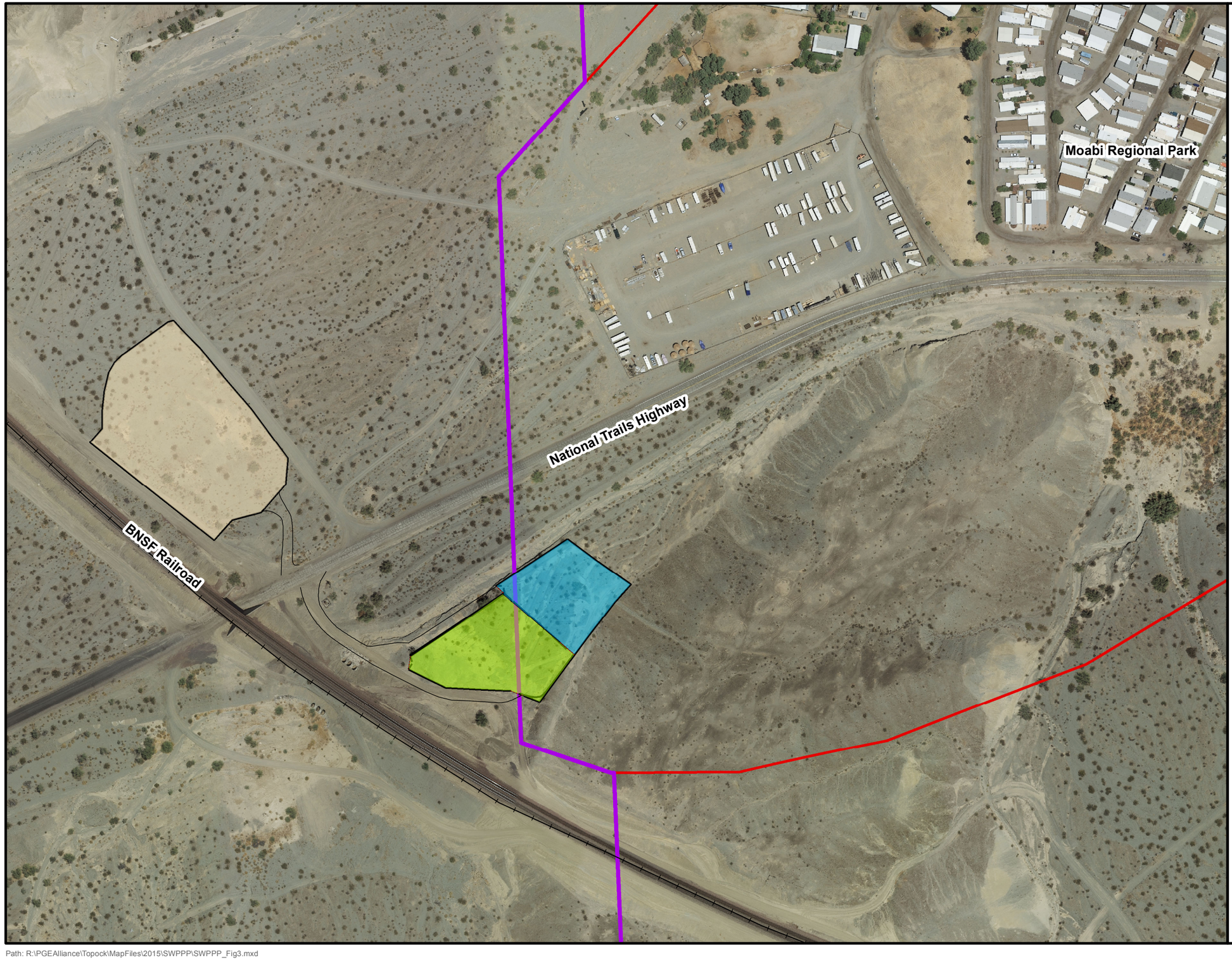

VICINITY MAP

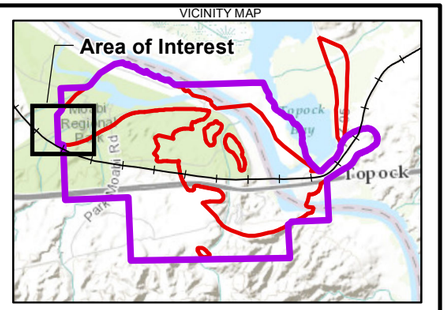

LEGEND

- Long-term Remedy Support Area (0.8 Acres Approximate)
- Soil Processing Area (2.56 Acres Approximate)
- Temporary Construction Laydown Area (1.05 Acres Approximate)
- Area of Potential Effects (APE)
- EIR Project Area

Notes:

1. Descriptions of activities/functions anticipated for the construction support areas are included in the Construction/Remedial Action Work Plan.
2. Descriptions of activities/functions anticipated for the long-term remedy support areas are included in Section 3.5 of the BOD, and the O&M Manual.

N

0 90 180 360 Feet

Service Layer Credits: Sources: Esri, HERE, DeLorme, Intermap, increment P Corp., GEBCO, USGS, FAO, NPS, NRCAN, GeoBase, IGN, Kadaster NL, Ordnance Survey, Esri Japan, METI, Esri China (Hong Kong), swisstopo, MapmyIndia, © OpenStreetMap contributors, and the GIS

FIGURE 3
MOABI REGIONAL PARK
REMEDY SYSTEM LAYOUT
GROUNDWATER REMEDY INDUSTRIAL
STORM WATER POLLUTION PREVENTION PLAN
PG&E TOPOCK COMPRESSOR STATION
NEEDLES, CALIFORNIA

CH2MHILL

Path: R:\PGEAlliance\Topock\MapFiles\2015\SWPPP\SWPPP_Fig3.mxd

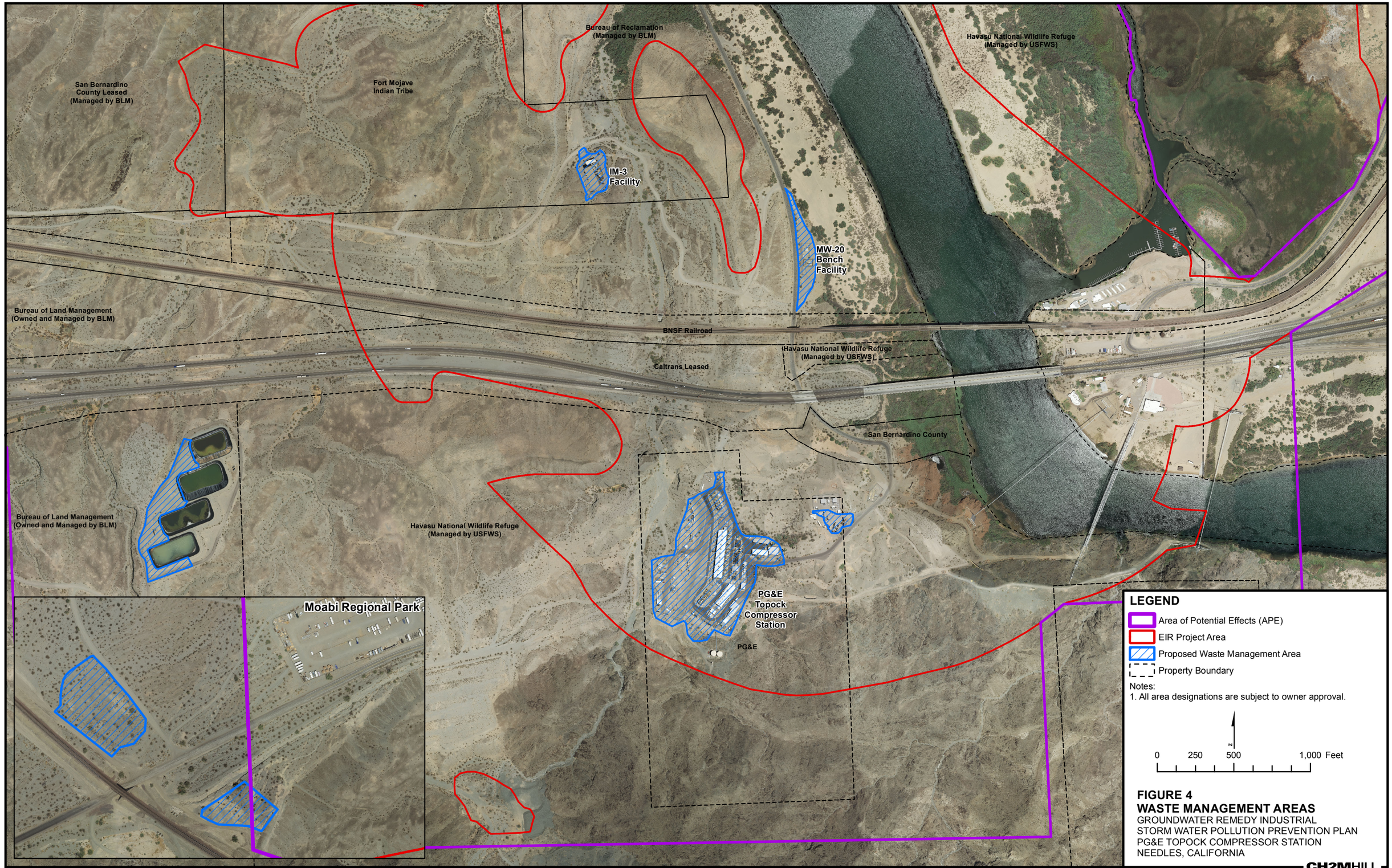

FIGURE 4
WASTE MANAGEMENT AREAS
GROUNDWATER REMEDY INDUSTRIAL
STORM WATER POLLUTION PREVENTION PLAN
PG&E TOPOCK COMPRESSOR STATION
NEEDLES, CALIFORNIA

CH2MHILL

Path: R:\PGEAlliance\Topock\MapFiles\2015\SWPPP\SWPPP_Fig4.mxd Date Saved: 11/10/2015 6:10:17 PM

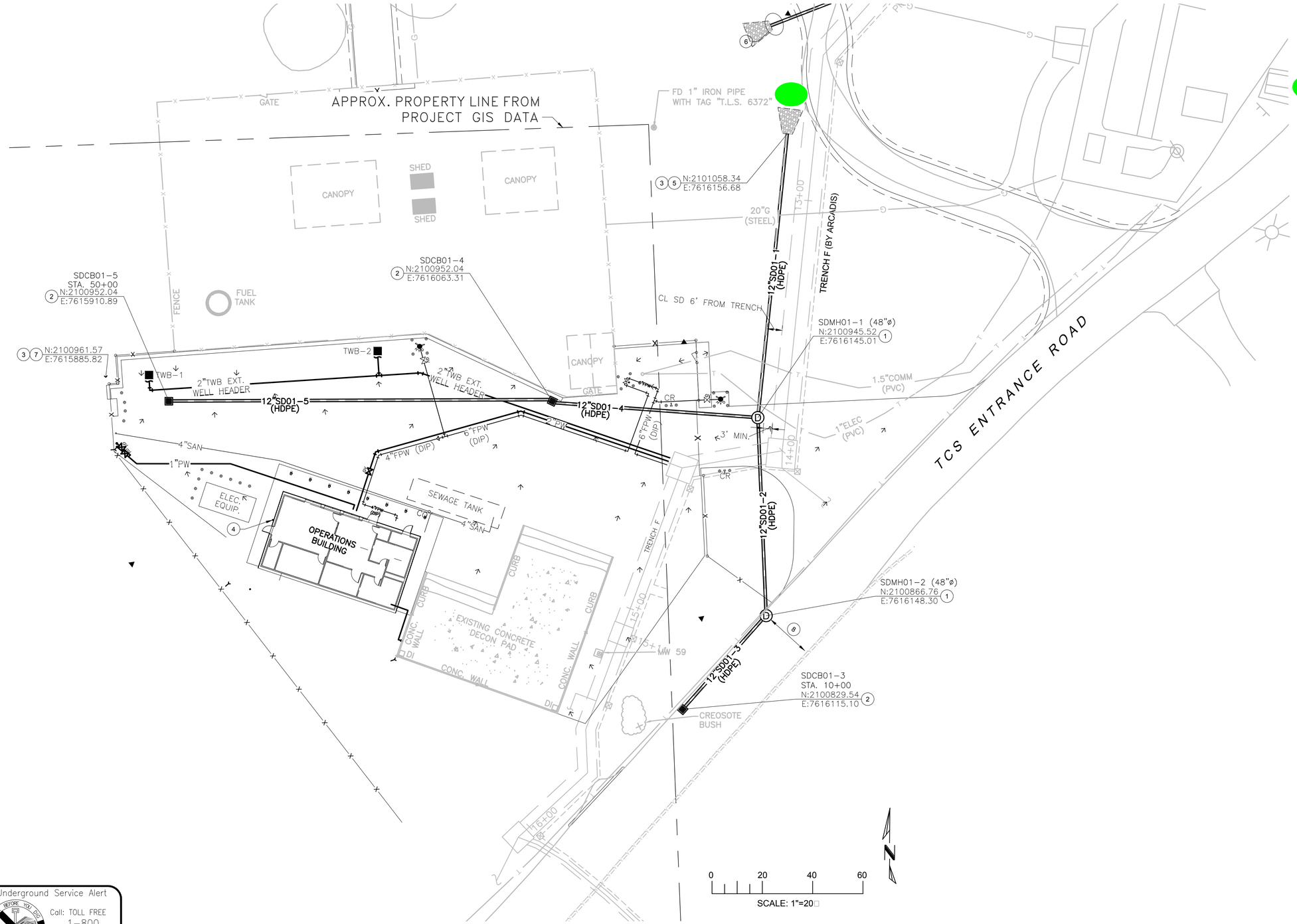

GENERAL NOTES:

A SEE LEGEND, NOTES □ ABBREVIATIONS C-08-00 FOR COMPLETE GENERAL NOTES.

ESTIMATED STORM WATER SURFACE DISCHARGE LOCATION

KEYED NOTES:

1 INSTALL MANHOLE. SEE DETAILS 2,3,4/C-00-08.
2 INSTALL 2"X2" CONC. CB AND GRATE SIMILAR TO MODEL CB-2424 AS MANUFACTURED BY OLD CASTLE.
3 INSTALL 18" THICK RIPRAP APRON (D50=12") OVER GEOTEXTILE FABRIC (MODEL 140N BY MIRAFI OR E□UIVALENT). SEE CALTRANS STANDARD DETAIL SS-10 (SIM) EXTEND MIN. 12" VERTICALLY ABOVE CROWN.
4 INSTALL ROOF DRAIN. KEEP ON NORTH FACE OF WALL. (DO NOT CROSS CONNECT WITH WALL DRAIN.)
5 INSTALL FLARED END SECTION. SEE CALTRANS STANDARD DETAIL D94A.
6 FOR NEW ACCESS ROAD LAYOUT, SEE DRAWING C-08-11.
7 DAYLIGHT WALL DRAIN ONTO SLOPE AND ENSURE DISCHARGE HAS A FREE DRAINING PATH.
8 AT MINIMUM ONE LANE MUST REMAIN OPEN AT ALL TIMES.

Underground Service Alert
DIG ALERT BEFORE YOU DIG
Call: TOLL FREE 1-800 227-2600
TWO WORKING DAYS BEFORE YOU DIG

- FINAL DESIGN - FOR AGENCY APPROVAL ONLY

REGISTERED PROFESSIONAL ENGINEER BENJAMIN J. WUEST C 67811 EXP 6/30/17 STATE OF CALIFORNIA

ETIC ENGINEERING

ARCADIS

NO.	DATE	DESCRIPTION	GM/SPEC	DWN	CHKD	SUPV	APVD BY
1	11/18/15	FINAL DESIGN		AJW	WLM	BW	RAO
0	8/5/15	90% RTC RESOLUTION		AJW	KLD	WLM	BJW

REVISIONS

APPROVED BY	
RAO	SO
	SUPV
	DSGN
	DWN
	CHKD
	OK
	DATE
	SCALES

TOPOCK GROUNDWATER REMEDIATION PROJECT

TRANSWESTERN BENCH STORM DRAINAGE PLAN

GAS TRANSMISSION & DISTRIBUTION
PACIFIC GAS AND ELECTRIC COMPANY
SAN FRANCISCO, CALIFORNIA

MICROFILM	
BILL OF MATL	
DWG LIST	
SUPSDS	
SUPSD BY	
SHEET NO. of SHEETS	
FIGURE 5	REV 1

N1808

11/03/2015, 09:56, G:\Graphics\ARITOPOCK-01\Submittal_100%\DWGs\C-Civil\C-08-04.dwg, Tab: C-08-04

MW20-SW1

Truck Loading/Unloading

Carbon Storage

Carbon Amendment Building

VICINITY MAP

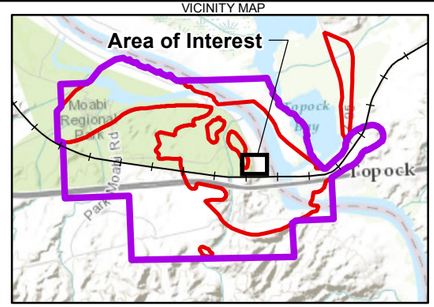

LEGEND

- Estimated Surface Water Discharge Location
- Estimated Surface Water Flow Direction
- Topographic Contour 25-foot Interval
- Topographic Contour 5-foot Interval
- Area of Potential Effects (APE)
- EIR Project Area

Remedy Facilities

- Proposed Remedy Structure

N

0 35 70 140 Feet

Service Layer Credits: Sources: Esri, HERE, DeLorme, Intermap, increment P Corp., GEBCO, USGS, FAO, NPS, NRCAN, GeoBase, IGN, Kadaster NL, Ordnance Survey, Esri Japan, METI, Esri China (Hong

FIGURE 6
MW-20 BENCH SYSTEM LAYOUT

GROUNDWATER REMEDY INDUSTRIAL STORM WATER POLLUTION PREVENTION PLAN
PG&E TOPOCK COMPRESSOR STATION
NEEDLES, CALIFORNIA

CH2MHILL

Path: R:\PGEAlliance\Topock\MapFiles\2015\SWPPP\SWPPP_Fig5.mxd

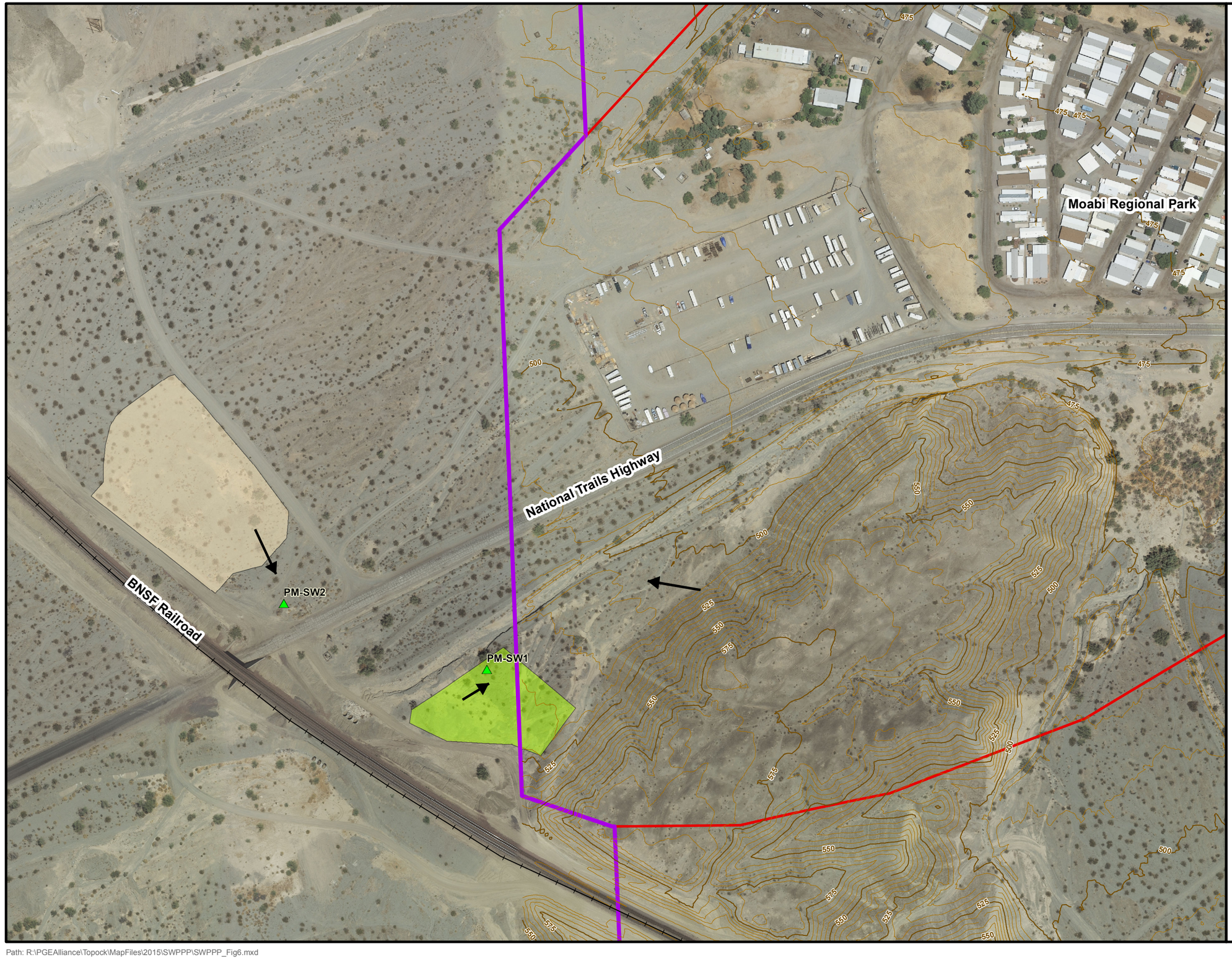

VICINITY MAP

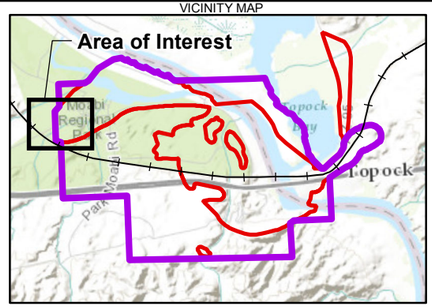

LEGEND

- Estimated Surface Water Discharge Location (Precise location will be verified during O&M)
- Estimated Surface Water Flow Direction
- Topographic Contour 25-foot Interval
- Topographic Contour 5-foot Interval
- Long-term Remedy Support Area (0.8 Acres Approximate)
- Clean Soil Storage Area (2.56 Acres Approximate)
- Area of Potential Effects (APE)
- EIR Project Area

N

0 90 180 360 Feet

Service Layer Credits: Sources: Esri, HERE, DeLorme, Intermap, increment P Corp., GEBCO, USGS, FAO, NPS, NRCAN, GeoBase, IGN, Kadaster NL, Ordnance Survey, Esri Japan, METI, Esri China (Hong

FIGURE 7
LONG-TERM REMEDY SUPPORT AREA AT MOABI REGIONAL PARK
GROUNDWATER REMEDY INDUSTRIAL
STORM WATER POLLUTION PREVENTION PLAN
PG&E TOPOCK COMPRESSOR STATION
NEEDLES, CALIFORNIA

CH2MHILL

Path: R:\PGEAlliance\Topock\MapFiles\2015\SWPPP\SWPPP_Fig6.mxd

Appendix A
California Industrial Storm Water General Permit

NATIONAL POLLUTANT DISCHARGE ELIMINATION SYSTEM (NPDES)

GENERAL PERMIT FOR
STORM WATER DISCHARGES
ASSOCIATED WITH INDUSTRIAL ACTIVITIES

ORDER
NPDES NO. CAS000001

This Order was adopted by the State Water Resources Control Board on:	**<Adoption Date>**
This Order shall become effective on:	~~January~~July **1, 2015**
This Order shall expire on:	~~December 31, 2019~~June 30, 2020

IT IS HEREBY ORDERED that as of ~~January~~July 1, 2015 this Order supersedes Order 97-03-DWQ except for Order 97-03-DWQ's requirement to submit annual reports by ~~January 1, 2015~~July 1, 2015 and except for enforcement purposes. As of ~~January~~July 1, 2015, a Discharger shall comply with the requirements in this Order to meet the provisions contained in Division 7 of the California Water Code (commencing with section 13000) and regulations adopted thereunder, and the provisions of the federal Clean Water Act and regulations and guidelines adopted thereunder.

I, Jeanine Townsend, Clerk to the Board, do hereby certify that this Order, including its fact sheet, attachments, and appendices is a full, true, and correct copy of an Order adopted by the State Water Resources Control Board, on **<Adoption Date>**.

AYE:

NO:

ABSENT:

ABSTAIN:

_____
Jeanine Townsend
Clerk to the Board

DRAFT

TABLE OF CONTENTS

I. FINDINGS 1
II. RECEIVING GENERAL PERMIT COVERAGE 15
III. DISCHARGE PROHIBITIONS 20
IV. AUTHORIZED NON-STORM WATER DISCHARGES (NSWDS) 20
V. EFFLUENT LIMITATIONS 22
VI. RECEIVING WATER LIMITATIONS 22
VII. TOTAL MAXIMUM DAILY LOADS (TMDLS) 22
VIII. DISCHARGES SUBJECT TO THE CALIFORNIA OCEAN PLAN 23
IX. TRAINING QUALIFICATIONS 24
X. STORM WATER POLLUTION PREVENTION PLAN (SWPPP) 25
XI. MONITORING 39
XII. EXCEEDANCE RESPONSE ACTIONS (ERAS) 50
XIII. INACTIVE MINING OPERATION CERTIFICATION 58
XIV. COMPLIANCE GROUPS AND COMPLIANCE GROUP LEADERS 59
XV. ANNUAL COMPREHENSIVE FACILITY COMPLIANCE EVALUATION (ANNUAL EVALUATION) 61
XVI. ANNUAL REPORT 62
XVII. CONDITIONAL EXCLUSION - NO EXPOSURE CERTIFICATION (NEC) 62
XVIII. SPECIAL REQUIREMENTS - PLASTIC MATERIALS 66
XIX. REGIONAL WATER BOARD AUTHORITIES 69
XX. SPECIAL CONDITIONS 70
XXI. STANDARD CONDITIONS 71

TABLES

TABLE 1: Additional Analytical Parameters 42
TABLE 2: Parameter NAL Values, Test Methods~~, Detection Limits~~, and Reporting Units 43

ATTACHMENTS AND APPENDICES

Attachment A Facilities Covered
Attachment B Acronyms
Attachment C Glossary
Attachment D Permit Registration Documents (PRDs)
Attachment E TMDL Implementation
Attachment F Effluent Limitation Guidelines (ELGs)
Attachment G Requirements for Dischargers Who Have Been Granted An Ocean Plan Exception for Discharges to ~~ASBS~~Areas of Special Biological Significance (ASBS)
Attachment H Storm Water Sample Collection and Handling Instructions
Appendix 1 Storm Water Pollution Prevention Plan (SWPPP) Checklist
Appendix 2 No Exposure Certification (NEC) Conditional Exclusion Instructions
Appendix 3 Waterbodies with Clean Water Act section 303(d) Listed Impairments

DRAFT

I. FINDINGS

A. General Findings

The State Water Resources Control Board (State Water Board) finds that:

1. The Federal Clean Water Act (Clean Water Act) prohibits certain discharges of storm water containing pollutants except in compliance with a National Pollutant Discharge Elimination System (NPDES) permit. (33 U.S.C. §§ 1311, 1342 (also referred to as Clean Water Act §§ 301, 402).) The United States Environmental Protection Agency (U.S. EPA) promulgates federal regulations to implement the Clean Water Act's mandate to control pollutants in storm water discharges. (40 C.F.R. § 122, et seq.) The NPDES permit must require implementation of Best Available Technology Economically Achievable (BAT) and Best Conventional Pollutant Control Technology (BCT) to reduce or ~~eliminate~~prevent pollutants in storm water discharges and authorized non-storm water discharges (NSWDs). The NPDES permit must also include additional requirements necessary to implement applicable water quality objectives or water quality standards (~~collectively,~~ water quality standards,~~WQS~~ collectively).

2. On November 16, 1990, U.S. EPA promulgated Phase I storm water regulations in compliance with section 402(p) of the Clean Water Act. (55 Fed. Reg. 47990, codified at 40 C.F.R. § 122.26.) These regulations require operators of facilities subject to storm water permitting (Dischargers), that discharge storm water associated with industrial activity (industrial storm water discharges), to obtain an NPDES permit. Section 402(p)(3)(A) of the Clean Water Act also requires that permits for discharges associated with industrial activity include requirements necessary to meet water quality standards~~WQS~~.

3. Phase II storm water regulations[1] require permitting for storm water discharges from facilities owned and operated by a municipality with a population of less than 100,000. The previous exemption from the Phase I permitting requirements under section 1068 of the Intermodal Surface Transportation Efficiency Act of 1991 was eliminated.

4. This Order (General Permit) is an NPDES General Permit issued in compliance with section 402 of the Clean Water Act and shall take effect on ~~January~~July 1, 2015, provided that the Regional Administrator of U.S. ~~-~~EPA has no objection. If the U.S. EPA Regional Administrator has an objection, this General Permit will not become effective until the objection is withdrawn.

5. This action to adopt an NPDES General Permit is exempt from the provisions of the California Environmental Quality Act (Pub. Resources Code, § 21000, et seq.) in accordance with section 13389 of the Water Code. (See *County of*

[1] U.S. EPA. Final NPDES Phase II Rule. <http://cfpub.epa.gov/npdes/stormwater/swfinal.cfm>. [as of February~~July 3~~4, 201~~3~~4]

Los Angeles v. California State Water Resources Control Bd. (2006) 143 Cal.App.4th 985.)

6. State Water Board Order 97-03-DWQ is rescinded as of the ~~Effective Date~~effective date of this General Permit (~~January~~July 1, 2015) except for Order 97-03-DWQ's requirement that annual reports be submitted by ~~January 1~~July1, 2015 and except for enforcement purposes.

7. Effective ~~January~~July 1, 2015, the State Water Board and the Regional Water Quality Control Boards (Regional Water Boards) (~~collectively,~~ Water Boards, collectively) will enforce the provisions herein.

8. This General Permit authorizes discharges of industrial storm water to waters of the United States, so long as those discharges comply with all requirements, provisions, limitations, and prohibitions in this General Permit.

9. Industrial activities covered under this General Permit are described in Attachment A.

10. The Fact Sheet for this Order is incorporated as findings of this General Permit.

11. Acronyms are defined in Attachment B and terms used in this General Permit are defined in Attachment C.

12. This General Permit regulates industrial storm water discharges and authorized NSWDs from specific categories of industrial facilities identified in Attachment A hereto, and industrial storm water discharges and authorized NSWDs from facilities designated by the Regional Water Boards to obtain coverage under this General Permit. This General Permit does not apply to industrial storm water discharges and NSWDs that are regulated by other individual or general NPDES permits

13. This General Permit does not preempt or supersede the authority of municipal agencies to prohibit, restrict, or control industrial storm water discharges and authorized NSWDs that may discharge to storm water conveyance systems or other watercourses within their jurisdictions as allowed by state and federal law.

14. All terms defined in the Clean Water Act, U.S. EPA regulations, and the Porter-Cologne Water Quality Control Act (Wat. Code, § 13000, et seq.) will have the same definition in this General Permit unless otherwise stated.

15. Pursuant to 40 Code of Federal Regulations section 131.12 and State Water Board Resolution 68-16, which incorporates the requirements of 40 Code of Federal Regulations section 131.12 where applicable, the State Water Board finds that discharges in compliance with this General Permit will not result in the lowering of water quality to a level that does not achieve water quality objectives and protect beneficial uses. Any degradation of water quality from existing high quality water to a level that achieves water quality objectives and

DRAFT

protects beneficial uses is appropriate to support economic development. This General Permit's requirements constitute best practicable treatment or control for discharges of industrial storm water and authorized non-storm water discharges, and are therefore consistent with those provisions.

16. Compliance with any specific limits or requirements contained in this General Permit does not constitute compliance with any other applicable permits.

17. This General Permit requires that the Discharger certify and submit all Permit Registration Documents (PRDs) for Notice of Intent (NOI) and No Exposure Certification (NEC) coverage via the State Water Board's Storm Water Multi-Application and Report Tracking System (SMARTS) website. ~~An~~(See Attachment D for an example of the information required to be submitted in the PRDs via SMARTS~~ can be found in Attachment D.~~) All other documents required by this General Permit to be electronically certified and submitted via SMARTS can be submitted by the Discharger or by a designated Duly Authorized Representative on behalf of the Discharger. Electronic reporting is required to reduce the state's reliance on paper, to improve efficiency, and to make such General Permit documents more easily accessible to the public and the Water Boards.

18. ~~Any~~All information provided to the Water Boards shall comply with the Homeland Security Act and ~~any~~all other federal law that concerns security in the United States, as applicable.

B. Industrial Activities Not Covered Under this General Permit

19. Discharges of storm water from areas on tribal lands are not covered under this General Permit. ~~Industrial~~Storm water discharges from industrial facilities on tribal lands are regulated by ~~an~~a separate NPDES permit issued by U.S. EPA.

20. Discharges of storm water regulated under another individual or general NPDES permit adopted by the State Water Board or Regional Water Board are not covered under this General Permit, including the ~~current~~State Water Board NPDES General Permit for Storm Water Discharges Associated with Construction and Land Disturbance Activities.

21. Storm water discharges to combined sewer systems are not covered under this General Permit. These discharges must be covered by an individual permit. (40 C.F.R. § 122.26(a)(7)~~6)(i)~~.)

22. Conveyances that discharge storm water runoff combined with municipal sewage are not covered under this General Permit.

23. Discharges of storm water identified in Clean Water Act section 402(l) (33 U.S.C. § 1342(l)) are not covered under this General Permit.

24. Facilities otherwise subject to this General Permit but for which a valid Notice of Non-Applicability (NONA) has been certified and submitted via SMARTS.

by the Entity are not covered under this General Permit. Entities (See Section XX.C.1 of this General Permit) who are claiming "No Discharge" through the NONA shall meet the eligibility requirements and provide a No Discharge Technical Report in accordance with Section XX.C.

25. This General Permit does not authorize discharges of dredged or fill material regulated by the US Army Corps of Engineers under section 404 of the Clean Water Act and does not constitute a water quality certification under section 401 of the Clean Water Act.

C. Discharge Prohibitions

26. Pursuant to section 13243 of the Water Code, the State Water Board may specify certain conditions or areas where the discharge of waste, or certain types of waste, is prohibited.

27. With the exception of certain authorized NSWDs as defined in Section IV, this General Permit prohibits NSWDs. The State Water Board recognizes that certain NSWDs should be authorized because they are not generated by industrial activity, are not significant sources of pollutants when managed appropriately, and are generally unavoidable because they are related to safety or would occur regardless of industrial activity. Prohibited NSWDs may be authorized under other individual or general NPDES permits, or waste discharge requirements issued by the Water Boards.

28. Prohibited NSWDs are referred to as unauthorized NSWDs in this General Permit. Unauthorized NSWDs shall be either eliminated or permitted by a separate NPDES permit. Unauthorized NSWDs may contribute significant pollutant loads to receiving waters. Measures to control sources of unauthorized NSWDs such as spills, leakage, and dumping, must be addressed through the implementation of Best Management Practices (BMPs).

29. This General Permit incorporates discharge prohibitions contained in water quality control plans, as implemented by the Water Boards.

30. Direct discharges of waste, including industrial storm water discharges, to Areas of Special Biological Significance (ASBS) are prohibited unless the Discharger has applied for and the State Water Board has granted an exception to the State Water Board's 2009 Water Quality Control Plan for Ocean Waters of California as amended by State Water Board Resolution 2012-0056 (California Ocean Plan)[2] allowing the discharge.

[2] State Water Resources Control Board. Ocean Standards Web Page. <http://www.waterboards.ca.gov/water_issues/programs/ocean/>. [as of February ~~July~~ ~~34~~, 201~~34~~]. State Water Resources Control Board. Water Quality Control Plan for Ocean Waters Of California 2009. <http://www.waterboards.ca.gov/water_issues/programs/ocean/docs/2009_cop_adoptedeffective_usepa.pdf>. [as of February ~~July~~ ~~34~~, 201~~34~~].

D. Effluent Limitations

31. Section 301(b) of the Clean Water Act and 40 Code of Federal Regulations section ~~122.44~~ require NPDES permits to include technology-based requirements at a minimum, and any more stringent effluent limitations necessary for receiving waters to meet applicable water quality standards~~WQS~~. Clean Water Act section 402(p)(3)(A) requires that discharges of storm water runoff from industrial facilities comply with Clean Water Act section 301.

32. This General Permit requires control of pollutant discharges using BAT and BCT to reduce and prevent ~~and reduce~~ discharges of pollutants, and any more stringent effluent limitations necessary for receiving waters to meet applicable water quality standards~~WQS~~.

33. It is not feasible for the State Water Board to establish numeric technology based effluent limitations for discharges ~~covered~~authorized by this General Permit at this time. The rationale for this determination is discussed in detail in the Fact Sheet of this General Permit. Therefore, this General Permit requires Dischargers to implement minimum BMPs and ~~any~~ applicable advanced BMPs as defined in Section X.H (collectively, BMPs) to comply with the requirements of this General Permit. This approach is consistent with U.S. EPA's 2008 Multi-Sector General Permit for Stormwater Discharges Associated with Industrial Activity (2008 MSGP).

34. 40 Code of Federal Regulations section 122.44(d) ~~also~~ requires that NPDES permits include Water Quality Based Effluent Limitations (WQBELs) to attain and maintain applicable numeric and narrative ~~WQS~~ water quality standards for receiving waters.

35. Where numeric water quality criteria have not been established, 40 Code of Federal Regulations section 122.44(d)(1)(vi) provides that WQBELs may be established using U.S. EPA criteria guidance under section 304(a) of the Clean Water Act, a proposed state criteria or policy interpreting narrative criteria supplemented with other relevant information, and/or an indicator parameter.

36. This General Permit requires Dischargers to implement BMPs when~~where~~ necessary, in order to support attainment of ~~WQS~~water quality standards. The use of BMPs to control or abate the discharge of pollutants is authorized by 40 Code of Federal Regulations section 122.44(k)(3) because numeric effluent limitations are infeasible and implementation of BMPs ~~are~~is reasonably necessary to achieve effluent limitations and water quality standards ~~or~~, and to carry out the purposes and intent of the Clean Water Act. (40 C.F.R. § 122.44(k)(4).)

State Water Resources Control Board. Resolution 2012-0056. <http://www.swrcb.ca.gov/board_decisions/adopted_orders/resolutions/2012/rs2012_0056.pdf>. [as of February~~July 3~~4, 201~~3~~4].

E. Receiving Water Limitations

37. This General Permit requires compliance with receiving water limitations based on water quality standards. The primary receiving water limitation requires that industrial storm water discharges and authorized NSWDs not cause or contribute to an exceedance of applicable water quality standards. ~~This General Permit requires all Dischargers to comply with all applicable WQS for waters of the United States that may be affected by their industrial storm water discharges and authorized NSWDs.~~ Water quality standards~~WQS~~ apply to the quality of the receiving water, not the quality of the industrial storm water discharge. Therefore, compliance with the receiving water limitations ~~can~~ generally ~~not~~cannot be determined solely by the effluent water quality characteristics. If any Discharger's storm water discharge causes or contributes to an exceedance of a water quality standard, that Discharger must implement additional BMPs or other control measures in order to attain compliance with the receiving water limitation. Compliance with ~~WQS~~ water quality standards may, in some cases, require Dischargers to implement controls that are more protective than ~~the~~ controls ~~that are necessary~~implemented solely to ~~meet~~comply with the technology-based requirements in this General Permit.

F. Total Maximum Daily Loads (TMDLs)

38. TMDLs relate to the maximum amount of a pollutant that a water body can receive and still attain water quality standards~~WQS~~. A TMDL is defined as the sum of the allowable loads of a single pollutant from all contributing point sources (the waste load allocations~~, or WLAs~~) and non-point sources (load allocations~~, or LAs~~), plus the contribution from background sources. (40 C.F.R. § 130.2(i).) Discharges addressed by this General Permit are considered to be point source discharges, and therefore must comply with effluent limitations that are "consistent with the assumptions and requirements of any available waste load allocation for the discharge prepared by the state and approved by U.S. EPA pursuant to 40 Code of Federal Regulations section 130.7. (40 C.F.R. § 122.44 (d)(1)(vii).) In addition, Water Code section 13263, subdivision (a), requires that waste discharge requirements implement any relevant water quality control plans. Many TMDLs contained in water quality control plans include implementation requirements in addition to waste load allocations. Attachment E of this General Permit lists the watersheds with U.S. EPA-approved and U.S. EPA-established TMDLs that include requirements, including waste load allocation~~WLA~~s, for Dischargers covered by this General Permit.

39. The State Water Board recognizes that it is appropriate to develop TMDL-specific permit requirements derived from each TMDL's waste load allocation~~WLA~~ and implementation requirements, in order to provide clarity to Dischargers regarding their responsibilities for compliance with applicable TMDLs. The development of TMDL-specific permit requirements is subject to public noticing requirements and a corresponding public comment period. ~~Given~~Due to the number and variety of Dischargers subject to a wide range of

DRAFT

TMDLs, development of TMDL-specific permit requirements for each TMDL listed in Attachment E will severely delay the reissuance of this General Permit. Because most of the TMDLs were established by the Regional Water Boards, and because some of the waste load allocation~~WLA~~s and/or implementation requirements may be shared by multiple Dischargers, the development of TMDL-specific permit requirements is best coordinated at the Regional Water Board level.

40. State and Regional Water Board staff~~, with the assistance of State Water Board staff,~~ will develop proposed TMDL-specific permit requirements (including monitoring and reporting requirements) for each of the TMDLs listed in Attachment E ~~by July 1, 2015~~. After conducting a 30-day public comment period, the Regional Water Boards will submit to the State Water Board proposed TMDL-specific permit requirements for adoption by the State Water Board into this General Permit~~.~~ by July 1, 2016. The Regional Water Boards may also include proposed TMDL-specific monitoring requirements for inclusion in this General Permit, or may issue Regional Water Board orders pursuant to Water Code section 13383 requiring TMDL-specific monitoring. The proposed TMDL-specific permit requirements shall have no force or effect until adopted, with or without modification, by the State Water Board. Consistent with the 2008 MSGP, Dischargers are not required to take any additional actions to comply with the TMDLs listed in Attachment E until the State Water Board reopens this General Permit and includes TMDL-specific permit requirements, unless notified otherwise by a Regional Water Board.

41. The Regional Water Boards shall submit to the State Water Board the following information for each of the TMDLs listed in Attachment E:

    a. Proposed TMDL-specific permit ~~and~~, monitoring and reporting requirements applicable to industrial storm water discharges and NSWDs authorized under this General Permit, including ~~any timelines~~compliance schedules and deliverables consistent with the TMDLs. TMDL-specific permit requirements are not limited by the BAT/BCT technology-based standards;

    b. An explanation of how the proposed TMDL-specific permit requirements, ~~timelines~~compliance schedules, and deliverables are consistent with the assumptions and requirements of any applicable waste load allocation~~WLA~~ and implement each TMDL; and,

    c. Where a BMP-based approach is proposed, an explanation of how the proposed BMPs will be sufficient to implement applicable waste load allocation~~WLA~~s.

42. Upon receipt of the information described in Finding 40, and no later than July 1, 2016, the State Water Board will issue a public notice and conduct a public comment period for the reopening of this General Permit to amend Attachment E, the Fact Sheet, and other provisions as necessary for

incorporation of TMDL-specific permit requirements into this General Permit. Attachment E may also be subsequently reopened during the term of this General Permit to incorporate additional TMDL-specific permit requirements.

G. Discharges Subject to the California Ocean Plan

43. On October 16, 2012 the State Water Board amended the California Ocean Plan ~~(California Ocean Plan).~~. The amended California Ocean Plan requires industrial storm water dischargers with outfalls discharging to ocean waters to comply with the California Ocean Plan's model monitoring provisions. These provisions require Dischargers to: (a) monitor runoff for specific parameters at all outfalls from two storm events per year, and collect at least one representative receiving water sample per year, (b) conduct specified toxicity monitoring at certain types of outfalls at a minimum of once per year, and (c) conduct marine sediment monitoring for toxicity under specific circumstances. The California Ocean Plan provides conditions under which some of the above monitoring provisions may be waived by the Water Boards.

44. This General Permit requires Dischargers with outfalls discharging to ocean waters that are subject to the model monitoring provisions of the California Ocean Plan to develop and implement a monitoring plan in compliance with those provisions and any additional monitoring requirements established pursuant to Water Code section 13383. Dischargers that have not developed and implemented a monitoring program in compliance with the California Ocean Plan's model monitoring provisions by ~~January~~July 1, 2015 (the effective date of this General Permit~~,~~), or seven (7) days prior to commencing operations, whichever is later, are ineligible to obtain coverage under this General Permit.

45. The California Ocean Plan prohibits the direct discharge of waste to ASBS. ASBS are defined in California Ocean Plan as "those areas designated by the State Water Board as ocean areas requiring protection of species or biological communities to the extent that alteration of natural water quality is undesirable."

46. The California Ocean Plan authorizes the State Water Board to grant an exception to Ocean Plan provisions where the board determines that the exception will not compromise protection of ocean waters for beneficial uses and the public interest will be served.

47. On March 20, 2012, the State Water Board adopted Resolution 2012-0012 which contains exceptions to the California Ocean Plan for specific discharges of storm water and non-point sources. This resolution also contains the special protections that are to be implemented for those discharges to ASBS.

48. This General Permit requires Dischargers who have been granted an exception to the Ocean Plan authorizing the discharges to ASBS by the State

Water Board to comply with the requirements contained in Section VIII.B of this General Permit.

H. Training

49. To improve compliance and maintain consistent implementation of this General Permit, Dischargers are required to designate a Qualified Industrial Storm Water Practitioner (QISP) for each facility the Discharger operates that has entered Level 1 status in the Exceedance Response Action (ERA) process as described in Section XII of this General Permit. A QISP may be assigned to more than one facility. In order to qualify as a QISP, a State Water Board-sponsored or approved training course must be completed. A competency exam may be required by the State Water Board to demonstrate sufficient knowledge of the QISP course material.

50. A QISP ~~is responsible for~~must assist the Discharger in completing the Level 1 status and Level 2 status ERA requirements as specified in Section XII of this General Permit.

51. A Compliance Group Leader, as defined in Section XIV of this General Order must ~~be a QISP~~complete a State Water Board sponsored or approved training program for Compliance Group Leaders.

52. All engineering work subject to the Professional Engineers Act (Bus. & Prof. Code § 6700, et seq.) and required by this General Permit shall be performed by a California licensed professional engineer ~~in accordance with the Professional Engineers Act (Bus. .& Prof. Code § 6700, et seq.).~~

53. California licensed professional civil, industrial, chemical, and mechanical engineers and geologists have licenses that have professional overlap with the topics of this General Permit. The California Department of Consumer Affairs, Board for Professional Engineers, Land Surveyors and Geologists (CBPELSG) provides the licensure and regulation of professional civil, industrial, chemical, and mechanical engineers and professional geologists in California. The State Water Board is developing a specialized self-guided State Water Board-sponsored registration and training program specifically for these CPBELSG licensed engineers and geologists in good standing with CBPELSG.

I. Storm Water Pollution Prevention Plan (SWPPP) Requirements

54. This General Permit requires the development of a site-specific SWPPP in accordance with Section X of this General Permit. The SWPPP must include the information needed to demonstrate compliance with the requirements of this General Permit. The SWPPP must be submitted electronically via SMARTS, and a copy be kept at the facility. SWPPP revisions shall be completed in accordance with Section X.B of this General Permit

DRAFT

J. Sampling, Visual Observations, Reporting and Record Keeping

55. This General Permit complies with 40 Code of Federal Regulations section 122.44(i), which establishes monitoring requirements that must be included in storm water permits. Under this General Permit, Dischargers are required to: (a) conduct an Annual Comprehensive Facility Compliance Evaluation (Annual Evaluation) to identify areas of the facility contributing pollutants to industrial storm water discharges, (b) evaluate whether measures to reduce or prevent ~~or reduce~~ industrial pollutant loads identified in the Discharger's SWPPP are adequate and properly implemented in accordance with the terms of this General Permit, and (c) determine whether additional control measures are needed.

~~56.~~ This General Permit contains monitoring requirements that are necessary to determine whether pollutants are being discharged, and whether response actions are necessary. Data and information resulting from the monitoring will assist in Dischargers' evaluations of BMP effectiveness and compliance with this General Permit. Visual observations are one form of monitoring. This General Permit requires Dischargers to perform a variety of visual observations designed to identify pollutants in industrial storm water discharges and their sources. To comply with this General Permit Dischargers shall: (1) electronically self-report any violations via SMARTS,

~~57.~~56. (2) comply with the Level 1 status and Level 2 status ERA requirements, when applicable, and (3) adequately address and respond to any Regional Water Board comments on the Discharger's compliance reports.

~~58.~~57. Dischargers that meet the requirements of the No Exposure Certification (NEC) Conditional Exclusion set forth in Section XVII of this General Permit are exempt from the SWPPP requirements, sampling requirements, and visual observation requirements in this General Permit.

K. Facilities Subject to Federal Storm Water Effluent Limitation Guidelines (ELGs)

~~59.~~58. U.S. EPA regulations at 40 Code of Federal Regulations Chapter I Subchapter N (Subchapter N) establish technology-based Effluent Limitation Guidelines and New Source Performance Standards (ELGs) for industrial storm water discharges from facilities in specific industrial categories. For these facilities, compliance with the BAT/BCT and ELG requirements constitutes compliance with technology-based requirements of this General Permit.

~~60.~~59. 40 Code of Federal Regulations section 122.44(i)(3) and (4) require storm water permits to require at least one Annual Evaluation and any monitoring requirements for applicable ELGs in Subchapter N. This General Permit requires Dischargers to comply with all applicable ELG requirements found in Subchapter N.

L. Sampling and Analysis Reduction

~~61.~~60. This General Permit reduces the number of qualifying sampling events required to be sampled each year when the Discharger demonstrates: (1) consistent compliance with this General Permit,(2) consistent effluent water quality sampling, and (3) analysis results that do not exceed numerical action levels.

M. Role of Numeric Action Levels (NALs) and Exceedance Response Actions (ERAs)

~~62.~~61. This General Permit incorporates a multiple objective performance measurement system that includes NALs, new comprehensive training requirements, Level 1 ERA Reports, Level 2 ERA Technical Reports, and Level 2 ERA Action Plans. Two objectives of the performance measurement system are to inform Dischargers, the public and the Water Boards on: (1) the overall pollutant control performance at any given facility, and (2) the overall performance of the industrial statewide storm water program. Additionally, the State Water Board expects that this information and assessment process will provide information necessary to determine the feasibility of numeric effluent limitations for industrial dischargers in the next reissuance of this General Permit, consistent with the State Water Board Storm Water ~~Panel's~~Panel of Experts' June 2006 Recommendations.[3]

~~63.~~62. This General Permit contains annual and instantaneous maximum NALs. The annual NALs are established as the 2008 MSGP benchmark values, and are applicable for all parameters listed in Table 2. The instantaneous maximum NALs are calculated from a Water Board dataset, and are only applicable for Total Suspended Solids (TSS), Oil and Grease (O&G), and pH. An NAL exceedance is determined as follows:

a. For annual NALs, an exceedance occurs when the average of all analytical results from all samples taken at a facility during a reporting year for a given parameter exceeds an annual NAL value listed in Table 2 of this General Permit; ~~and~~or,

b. For the instantaneous maximum NALs, an exceedance occurs when two or more analytical results from samples taken ~~from~~for any parameter within a reporting year exceed the instantaneous maximum NAL value (for ~~TSS~~Total Suspended Solids, and ~~O&G~~Oil and Grease), or are outside of the instantaneous maximum NAL range (for pH) listed in Table 2 of this General Permit. For the purposes of this General Permit, the reporting year is July 1 through June 30.

[3] State Water Board Storm Water Panel of Experts, The Feasibility of Numeric Effluent Limits Applicable to Discharges of Storm Water Associated with Municipal, Industrial and Construction Activities (June 19, 2006) <http://www.swrcb.ca.gov/water_issues/programs/stormwater/docs/numeric/swpanel_final_report.pdf> [as of February ~~July 34~~, 201~~3~~4].

~~64.~~63. The NALs are not intended to serve as technology-based or water quality-based numeric effluent limitations. The NALs are not derived directly from either BAT/BCT requirements or receiving water objectives. NAL exceedances defined in this General Permit are not, in and of themselves, violations of this General Permit. A Discharger that does not fully comply with the Level 1 status and/or Level 2 status ERA requirements, when required by the terms of this General Permit, is in violation of this General Permit.

~~65.~~64. ERAs are designed to assist Dischargers in complying with this General Permit. Dischargers subject to ERAs must evaluate the effectiveness of their BMPs being implemented to ensure they are adequate to achieve compliance with this General Permit.

~~66.~~65. U.S. EPA regulations at Subchapter N establish ELGs for storm water discharges from facilities in 11 industrial categories. Dischargers subject to these ELGs are required to comply with the applicable requirements.

~~67.~~66. Exceedances of the NALs that are attributable solely to pollutants originating from non-industrial pollutant sources (such as run-on from adjacent facilities, non-industrial portions of the Discharger's property, or aerial deposition) are not a violation of this General Permit because the NALs are designed to provide feedback on industrial sources of pollutants. Dischargers may submit a Non-Industrial Source Pollutant Demonstration as part of their Level 2 ERA Technical Report to demonstrate that the presence of a pollutant causing an NAL exceedance is attributable solely to pollutants originating from non-industrial pollutant sources.

~~68.~~67. A Discharger who has designed, installed, and implemented BMPs to reduce or prevent pollutants in industrial storm water discharges in compliance with this General Permit may submit an Industrial Activity BMPs Demonstration, as part of their Level 2 ERA Technical Report.

~~69.~~68. This General Permit establishes design storm standards for all treatment control BMPs. These design standards are directly based on the standards in State Water Board Order 2000-0011 regarding Standard Urban Storm Water Mitigation Plans (SUSMPs). These design standards are generally expected to be consistent with BAT/BCT, to be protective of water quality, and to be effective for most pollutants. The standards are intended to eliminate the need for most Dischargers to further treat/control industrial storm water discharges that are unlikely to contain pollutant loadings that exceed the NALs set forth in this General Permit.

N. Compliance Groups

~~70.~~69. Compliance Groups are groups of Dischargers (Compliance Group Participants) that share common types of pollutant sources and industrial activity characteristics. Compliance Groups provide an opportunity for the Compliance Group Participants to ~~pool~~combine resources and develop ~~Consolidated~~consolidated Level 1 ERA Reports for Level 1 NAL exceedances

and appropriate BMPs for implementation in response to Level 2 status ERA requirements that are representative of the entire Compliance Group. Compliance Groups also provide the Water Boards and the public with valuable information as to how industrial storm water discharges are affected by non-industrial background pollutant sources (including natural background) and geographic locations. When developing the next reissuance of this General Permit, the State Water Board expects to have a better understanding of the feasibility and benefits of sector-specific and watershed-based permitting ~~approaches~~alternatives, which may include technology- or water quality-based numeric effluent limitations ~~(NELs)~~. The ~~State Water Board intends that the~~ effluent data, BMP performance data and other information provided from Compliance Groups' consolidated reporting will further assist the State Water Board in addressing ~~these issues~~sector-specific and watershed-based permitting alternatives.

O. Conditional Exclusion – No Exposure Certification (NEC)

~~71.~~70. Pursuant to U.S. EPA Phase II regulations, all Dischargers subject to this General Permit may qualify for a conditional exclusion from specific requirements if they submit a NEC demonstrating that their facilities have no exposure of industrial activities and materials to storm water discharges.

~~72.~~71. This General Permit requires Dischargers who seek the NEC conditional exclusion to obtain coverage in accordance with Section XVII of this General Permit. Dischargers that meet the requirements of the NEC are exempt from the SWPPP, sampling requirements, and monitoring requirements in this General Permit.

~~73.~~72. Dischargers seeking NEC coverage are required to ~~file~~certify and submit the applicable permit registration documents. Annual inspections, re-certifications, and fees are required in subsequent years. Light industry facility Dischargers ~~that were previously~~ excluded from coverage under the previous permit (Order 97-03-DWQ) must obtain the appropriate coverage under this General Permit. Failure to comply with the Conditional Exclusion conditions listed in this General Permit may lead to enforcement for discharging without a permit pursuant to sections 13385 or 13399.25, et seq., of the Water Code. A Discharger with NEC coverage that anticipates a change (or changes) in circumstances that would lead to exposure should register for permit coverage prior to the anticipated changes.

P. Special Requirements for Facilities Handling Plastic Materials

~~74.~~73. Section 13367 of the Water Code requires facilities handling preproduction plastic to implement specific BMPs aimed at minimizing discharges of such materials. The definition of Plastic Materials for the purposes of this General Permit includes the following types of sources of Plastic Materials: virgin and recycled plastic resin pellets, powders, flakes, powdered additives, regrind, ~~scrap,~~ dust, and ~~industrial process waste or recycling that has~~other types of preproduction plastics with the potential to discharge or migrate ~~and~~

discharge off-site. Such Plastic Materials are considered storm water gross pollutants.

Q. Regional Water Board Authorities

75.74. Regional Water Boards are primarily responsible for enforcement of this General Permit. This General Permit recognizes that Regional Water Boards have the authority to protect the beneficial uses of receiving waters and prevent degradation of water quality in their region. As such, Regional Water Boards may modify monitoring requirements and review, comment, approve or disapprove certain Discharger submittals required under this General Permit.

DRAFT

IT IS HEREBY ORDERED that all Dischargers subject to this General Permit shall comply with the following conditions and requirements.

II. RECEIVING GENERAL PERMIT COVERAGE

A. Certification

1. For Storm Water Multi-Application Reporting and Tracking System (SMARTS) electronic account management and security reasons, as well as enforceability of this General Permit, the Discharger's Legally Responsible Person (LRP) of an industrial facility seeking coverage under this General Permit shall certify and submit all Permit Registration Documents (PRDs) for Notice of Intent (NOI) or No Exposure Certification (NEC) coverage. All other documents shall be certified and submitted via SMARTS by the Discharger's (LRP) or by their Duly Authorized Representative in accordance with the Electronic Signature and Certification Requirements in Section XXI.K. All documents required by this General Permit that are certified and submitted via SMARTS shall be in accordance with Section XXI.K.

2. Hereinafter references to certifications and submittals by the Discharger refer to the Discharger's LRP and their Duly Authorized Representative.

B. Coverages

This General Permit includes requirements for two (2) types of permit coverage, NOI coverage and NEC coverage. State Water Board Order 97-03-DWQ (previous permit) remains in effect until ~~January~~July 1, 2015. When PRDs are certified and submitted and the annual fee is received, the State Water Board will assign the Discharger a Waste Discharger Identification (WDID) number.

1. General Permit Coverage (NOI Coverage)

   a. Dischargers that discharge storm water associated with industrial activity to waters of the United States are required to meet all applicable requirements of this General Permit.

   b. The Discharger shall register for coverage under this General Permit by certifying and submitting PRDs via SMARTS (http://smarts.waterboards.ca.gov), which consist of:

      i. A completed NOI and signed certification statement;

      ii. A copy of a current Site Map from the Storm Water Pollution Prevention Plan (SWPPP) in Section X.E;

      iii. A SWPPP (see Section X); and,

c. ~~The Discharger shall pay appropriate Annual Fee in accordance with California Code of Regulations, title 23, section 2200 et seq.~~[4] The Discharger shall pay the appropriate Annual Fee in accordance with California Code of Regulations, title 23, section 2200 et seq.[5]

2. General Permit Coverage (NEC Coverage)

a. Dischargers that certify their facility has no exposure of industrial activities or materials to storm water in accordance with Section XVII qualify for NEC coverage and are not required to comply with the SWPPP or monitoring requirements of this General Permit.

b. Dischargers who qualify for NEC coverage shall conduct one Annual Facility Comprehensive Compliance Evaluation (Annual Evaluation) as described in Section XV, pay an annual fee, and ~~annually~~ certify annually that their facilities continue to meet the NEC requirements.

c. The Discharger shall submit the following PRDs on or before October 1, 2015 for NEC coverage via SMARTS:

i. A completed NEC Form (Section XVII.F.1) and signed certification statement (Section XVII.H);

ii. A completed NEC Checklist (Section XVII.F.2); and

iii. A current Site Map consistent with requirements in Section X.E~~; and,~~.;

d. ~~The Discharger shall pay the appropriate Annual Fee in accordance with California Code of Regulations, title 23, section 2200 et seq.~~[6] The Discharger shall pay the appropriate annual fee in accordance with California Code of Regulations, title 23, section 2200 et seq.[7]

3. General PRD Requirements

a. Site Maps

Dischargers registering for NOI or NEC coverage shall prepare a site map(s) as part of their PRDs in accordance with Section X.E. A separate copy of the site map(s) is required to be in the SWPPP. If there is a significant change in the facility layout (e.g., new building, change in

[4] ~~Until the State Board adopts an electronic fee payment system, annual fees must be mailed.~~
[5] See footnote 4. Annual fees must be mailed or sent electronically using the State Water Boards' Electronic Funds Transfer (EFT) system in SMARTS.
[6] ~~See footnote 4. Annual fees must be mailed or sent electronically using the State Water Boards' Electronic Funds Transfer (EFT) system in SMARTS.~~
[7] See footnote 4.

storage locations, boundary change, etc.) a revision to the site map is required and shall be certified and submitted via SMARTS.

b. A Discharger shall submit a single set of PRDs for coverage under this General Permit for multiple industrial activities occurring at the same facility.

c. Any information provided to the Water Boards by the Discharger shall comply with the Homeland Security Act and other federal law that addresses security in the United States; any information that does not comply should not be submitted in the PRDs. The Discharger must provide justification to the Regional Water Board regarding redacted information within any submittal.

d. Dischargers may redact trade secrets from ~~required submittals~~information that is submitted via SMARTS. Dischargers who certify and submit redacted information via SMARTS must include a general description of ~~any~~the redacted information and the basis for the redaction in the ~~submittal~~version that ~~includes the information.~~is submitted via SMARTS. Dischargers must submit complete and un-redacted ~~paper copies~~ versions of the information that are clearly labeled "CONFIDENTIAL" to the Regional Water Board within 30 days of the submittal of the redacted information. All information ~~submittal per this Section~~labeled "CONFIDENTIAL" will be maintained by the Water Boards in a separate, confidential file.

4. Schedule for Submitting PRDs - Existing Dischargers Under the Previous Permit.

a. Existing Dischargers[8] with coverage under the previous permit shall continue coverage under the previous permit until ~~January~~July 1, 2015. All waste discharge requirements and conditions of the previous permit are in effect until ~~January~~July 1, 2015.

b. Existing Dischargers with coverage under the previous permit shall ~~have until January 1, 2015 to~~ register for NOI coverage by July 1, 2015 or for NEC coverage~~.~~ by October 1, 2015. Existing Dischargers ~~that were~~ previously listed in Category 10 (Light Industry) of the previous permit, and continue to have no exposure to industrial activities and materials, have until ~~January~~October 1, 2015 to register for NEC coverage.

c. Existing Dischargers with coverage under the previous permit, that do not register for NOI ~~or NEC~~ coverage by ~~January~~July 1, 2015, may have their permit coverage administratively terminated as soon as ~~January~~July 1, 2015.

[8] Existing Dischargers are Dischargers with an active Notice of Intent (permit coverage) under the previous permit (97-03-DWQ) prior to the effective date of this General Permit.

d. Existing Dischargers with coverage under the previous permit that are eligible for NEC coverage but do not register for NEC coverage by October 1, 2015 may have their permit coverage administratively terminated as soon as ~~July~~October 1, 2015.

~~d.~~e. Existing Dischargers shall continue to comply with the SWPPP requirements in State Water Board Order 97-03-DWQ up to, but no later than, ~~December 31, 2014~~June 30, 2015.

~~e.~~f. Existing Dischargers shall implement an updated SWPPP in accordance with Section X by ~~January~~July 1, 2015.

~~f.~~g. Existing Dischargers that submit a Notice of Termination (NOT) under the previous permit prior to ~~January~~July 1, 2015 and that receive NOT approval from the Regional Water Board are not subject to this General Permit unless they subsequently submitted new PRDs.

5. Schedule for Submitting PRDs - New Dischargers Obtaining Coverage On or After ~~January~~July 1, 2015

   New Dischargers registering for NOI coverage on or after ~~January~~July 1, 2015 shall certify and submit PRDs via SMARTS at least seven (7) days prior to commencement of industrial activities or on ~~January~~July 1, 2015, whichever comes later.

   a. New Dischargers registering for NEC coverage shall electronically certify and submit PRDs via SMARTS by ~~January~~October 1, 2015, or at least seven (7) days prior to commencement of industrial activities, whichever ~~comes~~is later.

C. Termination and Changes to General Permit Coverage

1. Dischargers with NOI or NEC coverage shall request termination of coverage under this General Permit when either (a) operation of the facility has been transferred to another entity, (b) the facility has ceased operations, completed closure activities, and removed all industrial related pollutants, or (c) the facility's operations have changed and are no longer subject to the General Permit. Dischargers shall certify and submit a Notice of Termination ~~(NOT)~~ via SMARTS. Until a valid NOT is received, the Discharger remains responsible for compliance with this General Permit and payment of accrued annual fees.

2. Whenever there is a change to the facility location, the Discharger shall certify and submit new PRDs via SMARTS. When ownership changes, the prior Discharger (seller) must inform the new Discharger (buyer) of the General Permit applications and regulatory coverage requirements. The new Discharger must certify and submit new PRDs via SMARTS to obtain coverage under this General Permit.

DRAFT

3. Dischargers with NOI coverage where the facility qualifies for NEC coverage in accordance with Section XVII of this General Permit, may register for NEC coverage via SMARTS. Such Dischargers are not required to submit an NOT to cancel NOI coverage.

4. Dischargers with NEC coverage, where changes in the facility and/or facility operations occur, which result in NOI coverage instead of NEC coverage, shall register for NOI coverage via SMARTS. Such Dischargers are not required to submit an NOT to cancel NEC coverage.

5. Dischargers shall provide additional information supporting an NOT, or revise their PRDs via SMARTS, upon request by the Regional Water Board.

6. Dischargers that are denied approval of a submitted NOT or registration for NEC coverage by the Regional Water Board, shall continue compliance with this General Permit under their existing NOI coverage.

7. New Dischargers (Dischargers with no previous NOI or NEC coverage) shall register for NOI coverage if the Regional Water Board denies NEC coverage.

~~8. Dischargers that change coverage from NOI coverage to NEC coverage are not required to pay the annual fees associated with NEC coverage until the following billing cycle. Dischargers changing coverage from NEC coverage to NOI coverage shall pay the full NOI coverage annual fee. The NOI coverage fee shall not be pro-rated.~~

D. Preparation Requirements

1. The following documents shall be certified and submitted by the Discharger via SMARTS:

   a. Annual Reports (Section XVI) and SWPPPs (Section X);

   b. NOTs;

   c. Sampling Frequency Reduction ~~(SFR)~~ Certification (Section XI.C.7);

   d. Level 1 ERA Reports (Section XII.C) prepared by a QISP; ~~and~~

   e. Level 2 ERA Technical Reports and Level 2 ERA Action Plans (Sections XII.D.1-2) prepared by a QISP; and,

   f. SWPPPs for inactive mining operations as described in Section XIII, signed (wet signature and license number) ~~prepared~~ by a California licensed professional engineer.

2. The following documents shall be ~~prepared, stamped and~~ signed (wet signature and license number) by a California licensed professional engineer:

a. Calculations for Dischargers subject to Subchapter N in accordance with Section XI.D;

b. Notice of Non-Applicability (NONA) Technical Reports described in Section XX.C for facilities that are engineered and constructed to have contained the maximum historic precipitation event (or series of events) using the precipitation data collected from the National Oceanic and Atmospheric Agency's website;

c. NONA Technical Reports described in Section XX.C for facilities located in basins or other physical locations that are not tributaries or hydrologically connected to waters of the United States; and,

d. SWPPPs for inactive mines described in Section XIII.

III. DISCHARGE PROHIBITIONS

A. All discharges of storm water to waters of the United States are prohibited except as specifically authorized by this General Permit or another NPDES permit.

B. Except for non-storm water discharges (NSWDs) authorized in Section IV, discharges of liquids or materials other than storm water, either directly or indirectly to waters of the United States, are prohibited~~. These unauthorized~~ unless authorized by another NPDES permit. Unauthorized NSWDs must be either eliminated or authorized by a separate NPDES permit.

C. Industrial storm water discharges and authorized NSWDs ~~shall not~~that contain pollutants that cause or threaten to cause pollution, contamination, or nuisance as defined in section 13050 of the Water Code, are prohibited.

D. ~~Dischargers shall not~~Discharges that violate any discharge prohibitions contained in applicable Regional Water Board Water Quality Control Plans (Basin Plans), or statewide water quality control plans and policies~~.~~ are prohibited.

~~D.~~**E.** Discharges to ASBS are prohibited in accordance with the California Ocean Plan, unless granted an exception by the State Water Board and in compliance with the Special Protections contained in Resolution 2012-0012.

~~E.~~**F.** Industrial storm water discharges and NSWDs authorized ~~NSWDs regulated~~ by this General Permit ~~shall not~~that contain hazardous substances equal to or in excess of a reportable quantity listed in 40 Code of~~.~~ Federal ~~.~~Regulations~~.~~ sections 110.6, 117.21, or 302.6~~.~~ are prohibited.

IV. AUTHORIZED NON-STORM WATER DISCHARGES (NSWDs)

A. The following NSWDs are authorized provided they meet the conditions of Section IV.B:

1. Fire-hydrant~~,~~ and fire prevention or response system flushing;

2. Potable water sources including potable water related to the operation, maintenance, or testing of potable water systems;

3. Drinking fountain water and atmospheric condensate including refrigeration, air conditioning, and compressor condensate;

4. Irrigation drainage and landscape watering provided all pesticides, herbicides and fertilizers have been applied in accordance with the manufacturer's label;

5. Uncontaminated natural springs, groundwater, foundation drainage, footing drainage;

6. Seawater infiltration where the seawater is discharged back into the source: and,

7. Incidental windblown mist from cooling towers that collects on rooftops or adjacent portions of your facility, but not intentional discharges from the cooling tower (e.g., "piped" cooling tower blowdown or drains).

B. The NSWDs identified in Section IV.A are authorized by this General Permit if the ~~Discharger satisfies the~~ following conditions are met:

1. The authorized NSWDs are not in violation of any Regional Water Board Water Quality Control Plans (Basin Plans) or other requirements, or statewide water quality control plans or policies requirement;

2. The authorized NSWDs are not in violation of any municipal agency ordinance or requirements;

3. BMPs ~~have been~~are included in the SWPPP and implemented to:

   a. ~~Prevent~~Reduce or ~~reduce~~prevent the contact of authorized NSWDs with materials or equipment that are potential sources of pollutants;

   b. ~~Minimize~~Reduce, to the extent practicable, the flow or volume of authorized NSWDs;

   c. Ensure that authorized NSWDs do not contain quantities of pollutants that cause or contribute to an exceedance of a water quality standards~~WQS~~; and,

   d. ~~Prevent~~Reduce or ~~reduce~~prevent discharges of pollutants in authorized NSWDs in a manner that reflects best industry practice considering technological availability and economic practicability and achievability.

4. ~~Conduct~~The Discharger ~~C~~conducts monthly visual observations (Section XI.A.1) of NSWDs and sources to ensure adequate BMP implementation and effectiveness; and,

5. ~~Report~~The Discharger reports and ~~describe~~describes all authorized NSWDs in the Annual Report.

C. Firefighting related discharges are not subject to this General Permit and are not subject to the conditions of Section IV.B. These discharges, however, may be subject to Regional Water Board enforcement actions under other sections of the Water Code. Firefighting related discharges that are contained and are later discharged may be subject to municipal agency ordinances and/or Regional Water Board requirements.

V. EFFLUENT LIMITATIONS

A. Dischargers shall implement BMPs that comply with the BAT/BCT requirements of this General Permit to reduce or prevent discharges of pollutants in their storm water discharge in a manner that reflects best industry practice considering technological availability and economic practicability and achievability.

B. Industrial storm water discharges from facilities subject to storm water ELGs in Subchapter N shall not exceed those ~~effluent limitations.~~storm water ELGs. The ELGs for industrial storm water discharges subject to Subchapter N are ~~found~~ in Attachment F of this General Permit.

C. Dischargers located within a watershed for which a Total Maximum Daily Load (TMDL) has been approved by U.S. EPA, shall comply with any applicable TMDL-specific permit requirements that have been incorporated into this General Permit in accordance with Section VII.A. Attachment E contains a reference list of potential TMDLs that may apply to Dischargers subject to this General Permit.

VI. RECEIVING WATER LIMITATIONS

A. Dischargers shall ensure that industrial storm water discharges and authorized NSWDs do not cause or contribute to an exceedance of any applicable water quality standards~~WQS~~ in any affected receiving water.

B. Dischargers shall ensure that industrial storm water discharges and authorized NSWDs do not adversely affect human health or the environment.

C. Dischargers shall ensure that industrial storm water discharges and authorized NSWDs do not contain pollutants in quantities that threaten to cause pollution or a public nuisance.

VII. TOTAL MAXIMUM DAILY LOADS (TMDLs)

A. Implementation

1. The State Water Board shall reopen and amend this General Permit, including Attachment E, the Fact Sheet and other applicable Permit provisions as necessary, in order to incorporate TMDL-specific permit

requirements, as described in Findings 3~~8~~7 through 4~~2~~21. Once this General Permit is amended, Dischargers shall comply with the incorporated TMDL-specific permit requirements in accordance with any specified compliance schedule(s). TMDL-specific compliance dates that exceed the term of this General Permit may be included for reference, and are enforceable in the event that this General Permit is administratively extended or reissued.

2. The State Water Board may, at its discretion, reopen this General Permit to add TMDL-specific permit requirements to Attachment E, or to incorporate new TMDLs adopted during the term of this General Permit that include requirements applicable to Dischargers covered by this General Permit.

B. New Dischargers applying for NOI coverage under this General Permit that will be discharging to ~~an impaired~~a water body with a 303(d) listed impairment are ineligible for coverage unless the Discharger submits data and/or information demonstrating that:

1. ~~Demonstrates that the discharger~~The Discharger has eliminated all exposure to storm water of the pollutant(s) for which the water body is impaired, ~~and documents~~has documented the procedures taken to prevent exposure onsite, and ~~retains~~has retained such documentation with the SWPPP at the facility;

2. ~~Demonstrates the~~The pollutant for which the water body is impaired is not present at the ~~site~~Discharger's facility, and ~~retains~~the Discharger has retained documentation of this finding with the SWPPP at the facility; or,

3. ~~Demonstrates the~~The discharge of any listed pollutant ~~discharge~~ will not cause or contribute to an exceedance of a ~~WQS~~water quality standard. This is demonstrated if: (1) the discharge complies with water quality standard~~WQS~~ at the point of discharge, or (2) if there are sufficient remaining waste load allocation~~WLA~~s in an approved TMDL and the discharge is controlled at least as stringently as similar discharges subject to that TMDL.

VIII. DISCHARGES SUBJECT TO THE CALIFORNIA OCEAN PLAN

A. Discharges to Ocean Waters

1. Dischargers with outfalls discharging to ocean waters that are subject to the model monitoring provisions of the California Ocean Plan shall develop and implement a monitoring plan in compliance with those provisions and any additional monitoring requirements established pursuant to Water Code section 13383. Dischargers who have not developed and implemented a monitoring program in compliance with the California Ocean Plan's model monitoring provisions by ~~January~~July 1, 2015, or seven (7) days prior to commencing of operations, whichever is later, are ineligible to obtain coverage under this General Permit.

2. Dischargers are ineligible for the methods and exceptions provided in Section XI.C of this General permit for any of the outfalls discharging to ocean waters subject to the model monitoring provisions of the California Ocean Plan.

B. Discharge Granted an Exceptions for Areas of Special Biological Significance (ASBS)

Dischargers who were granted an exception to the California Ocean Plan prohibition against direct discharges of waste to an ASBS pursuant to Resolution 2012-0012[9] amended by Resolution 2012-0031[10] shall comply with the conditions and requirements set forth in Attachment G of this General Permit. Any Discharger that applies for and is granted an exception to the California Ocean Plan prohibition after July 1, 2013 shall comply with the conditions and requirements set forth in the granted exception.

IX. TRAINING QUALIFICATIONS

A. General

1. A Qualified Industrial Storm Water Practitioner (QISP) is a person (either the Discharger or a person designated by the Discharger) who has completed a State Water Board-sponsored or approved QISP training course[11], and has registered as a QISP via SMARTS. Upon completed registration the State Water Board will issue a QISP identification number.

2. The Executive Director of the State Water Board or an Executive Officer of a Regional Water Board may rescind any QISP's registration if it is found that the QISP has repeatedly demonstrated an inadequate level of performance in completing the QISP requirements in this General Permit. An individual whose QISP registration has been rescinded may ~~file a written appeal to~~request that the State Water Board review the rescission. Any ~~appeal~~ request for review must be received by the State Water Board no later than 30 days of the date that the individual received written notice of the rescission.

3. Dischargers with Level 1 status shall:

   a. Designate a person to be the facility's QISP and ensure that this person has attended and satisfactorily completed the State Water Board-sponsored or approved QISP training course.

[9] State Water Resources Control Board. Resolution 2012-0012. <http://www.waterboards.ca.gov/board_decisions/adopted_orders/resolutions/2012/rs2012_0012.pdf>. [as of February ~~July 34~~, 2014~~3~~].

[10] State Water Resources Control Board. Resolution 2012-0031. <http://www.swrcb.ca.gov/board_decisions/adopted_orders/resolutions/2012/rs2012_0031.pdf>. [as of February ~~July 34~~, 2014~~34~~].

[11] A specialized self-guided State Water Board-sponsored registration and training program will be available as an option for CPBELSG licensed professional civil, mechanical, industrial, and chemical engineers and professional geologists by the effective date of this General Permit.

b. Ensure that the facility's designated QISP provides sufficient training to ~~all facility staff~~the appropriate team members assigned to perform activities required by this General Permit.

X. Storm Water Pollution Prevention Plan (SWPPP)

A. SWPPP Elements

Dischargers shall develop and implement a site-specific SWPPP for each industrial facility covered by this General Permit that shall contain the following elements, as described further in this Section[12]:

1. Facility Name and Contact Information;
2. Site Map;
3. List of ~~Significant~~ Industrial Materials;
4. Description of Potential Pollution Sources;
5. Assessment of Potential Pollutant Sources;
6. Minimum BMPs;
7. Advanced BMPs, if applicable;
8. Monitoring Implementation Plan ~~(MIP)~~;
9. Annual Comprehensive Facility Compliance Evaluation (Annual Evaluation); and,
10. Date that SWPPP was Initially Prepared and the Date of Each SWPPP Amendment, if Applicable.

B. SWPPP Implementation and Revisions

All Dischargers are required to implement their SWPPP by ~~January~~July 1, 2015 or upon commencement of industrial activity. The Discharger shall:

1. Revise their on-site SWPPP whenever necessary;
2. Certify and submit via SMARTS their SWPPP within 30 days whenever the SWPPP contains significant revision(s); and,
3. ~~Not be~~With the exception of significant revisions, the Discharger is not required to certify and submit via SMARTS their SWPPP revisions more than once every three (3) months in the reporting year.

[12] Appendix 1 (SWPPP Checklist) of this General Permit is ~~included for reference by~~provided to assist the Discharger ~~on~~in including information required ~~to be included~~ in the SWPPP. This checklist is not required to be used.

C. SWPPP Performance Standards

1. The Discharger shall ensure a SWPPP is prepared to:

   a. Identify and evaluate all sources of pollutants that may affect the quality of industrial storm water discharges and authorized NSWDs;

   b. Identify and describe the minimum BMPs (Section X.H.1) and any advanced BMPs (Section X.H.2) implemented to reduce or prevent pollutants in industrial storm water discharges and authorized NSWDs. BMPs shall be selected to achieve compliance with this General Permit; and,

   c. Identify and describe conditions or circumstances which may require future revisions to be made to the SWPPP.

2. The Discharger shall prepare a SWPPP in accordance with all applicable SWPPP requirements of this Section. A copy of the SWPPP shall be maintained at the facility.

D. Planning and Organization

1. Pollution Prevention Team

   Each facility must have a Pollution Prevention Team established and responsible for assisting with the implementation of the requirements in this General Permit. The Discharger shall include in the SWPPP detailed information about its Pollution Prevention Team including:

   a. The positions within the facility organization (collectively, team members) who assist in implementing the SWPPP and conducting all monitoring requirements in this General Permit;

   b. The responsibilities, duties, and activities of each of the team members; and,

   c. The procedures ~~that shall be implemented~~ to identify alternate team members to implement the SWPPP and conduct required monitoring ~~requirements~~ when the regularly assigned team members are temporarily unavailable (due to vacation, illness, out of town business, ~~etc.).~~ or other absences).

2. Other Requirements and Existing Facility Plans

   a. The Discharger shall ensure its SWPPP is developed, implemented, and revised as necessary to be consistent with any applicable municipal, state, and federal requirements that pertain to the requirements in this General Permit.

b. The Discharger may include in their SWPPP the specific elements of existing plans, procedures, or regulatory compliance documents that contain storm water-related BMPs or otherwise relate to the requirements of this General Permit.

c. The Discharger shall properly reference the original sources for any elements of existing plans, procedures, or regulatory compliance documents included as part of their SWPPP and shall maintain a copy of the documents at the facility as part of the SWPPP.

d. The Discharger shall document in their SWPPP the facility's scheduled ~~facility~~ operating hours as defined in Attachment C. Scheduled facility operating hours that would be considered irregular (temporary, intermittent, seasonal, weather dependent, etc.) shall also be documented in the SWPPP.

E. Site Map

1. The Discharger shall prepare a site map that includes notes, legends, a north arrow, and other data as appropriate to ensure the map is clear, legible and understandable.

2. The Discharger may provide the required information on multiple site maps.

3. The Discharger shall include the following information on the site map:

   a. The facility boundary, storm water drainage areas within the facility boundary, and portions of any drainage area impacted by discharges from surrounding areas. Include the flow direction of each drainage area, on-facility surface water bodies, areas of soil erosion, and location(s) of nearby water bodies (such as rivers, lakes, wetlands, etc.) or municipal storm drain inlets that may receive the facility's industrial storm water discharges and authorized NSWDs;

   b. Locations of storm water collection and conveyance systems, associated ~~points of~~ discharge locations, and direction of flow. Include any sample locations if different than the identified discharge locations;

   ~~b.~~c. Locations and descriptions of structural control measures[13] that affect industrial storm water discharges, authorized NSWDs, and/or run-on;

[13] Examples of structural control measures are catch basins, berms, detention ponds, secondary containment, oil/water separators, diversion barriers, etc.

~~c.~~d. Identification of all impervious areas of the facility, including paved areas, buildings, covered storage areas, or other roofed structures;

~~d.~~e. Locations where materials are directly exposed to precipitation and the locations where identified significant spills or leaks (Section X.G.1.d) have occurred; and~~,~~

~~e.~~f. Areas of industrial activity subject to this General Permit. Identify all industrial storage areas and storage tanks, shipping and receiving areas, fueling areas, vehicle and equipment storage/maintenance areas, material handling and processing areas, waste treatment and disposal areas, dust or particulate generating areas, cleaning and material reuse areas, and other areas of industrial activity that may have potential pollutant sources.

F. List of ~~Significant~~ Industrial Materials

The Discharger shall ensure the SWPPP includes a list of ~~significant~~ industrial materials handled at the facility, and the locations where each material is stored, received, shipped, and handled, as well as the typical quantities and handling frequency. ~~Dischargers shall list materials that include raw materials, intermediate products, final or finished products, recycled materials, and waste or disposed materials in the SWPPP.~~

G. Potential Pollutant Sources

1. Description of Potential Pollutant Sources

   a. Industrial Processes

      The Discharger shall ensure the SWPPP describes each industrial process including: manufacturing, cleaning, maintenance, recycling, disposal, and any other activities related to the process. The type, characteristics, and approximate quantity of ~~significant~~ industrial materials used in or resulting from the process shall be included. Areas protected by containment structures and the corresponding containment capacity shall be identified and described.

   b. Material Handling and Storage Areas

      The Discharger shall ensure the SWPPP describes each material handling and storage area, including: the type, characteristics, and quantity of ~~significant~~ industrial materials handled or stored; the shipping, receiving, and loading procedures; the spill or leak prevention and response procedures; and the areas protected by containment structures and the corresponding containment capacity.

   c. Dust and Particulate Generating Activities

The Discharger shall ensure the SWPPP describes all industrial activities that generate a significant amount of dust or particulate that may be deposited within the facility boundaries. The SWPPP shall describe such industrial activities, including the discharge locations, the source type, and the characteristics of the dust or particulate pollutant.

d. Significant Spills and Leaks

The Discharger shall:

i. Evaluate the facility for areas where spills and leaks can likely occur;

ii. Ensure the SWPPP includes ~~a~~:

a) A list of any industrial materials~~, including unauthorized NSWDs~~ that have spilled or leaked in significant quantities and have discharged from the facility's storm water conveyance system within the previous five-year period;

b) ~~Ensure the SWPPP includes a~~A list of any toxic chemicals identified in 40 Code of Federal Regulations section 302 that have been discharged from the facilities' storm water conveyance system as reported on U.S. EPA Form R, as well as oil and hazardous substances in excess of reportable quantities (40 C.F.R. §§ 110, 117, and 302) that have discharged from the facility's storm water conveyance system within the previous five-year period;

c) ~~Ensure the SWPPP includes a~~A list of any industrial materials that have spilled or leaked in significant quantities and had the potential to be discharged from the facility's storm water conveyance system within the previous five-year period; and,

~~ii.~~iii. Ensure that for each discharge or potential discharge listed above the SWPPP includes the location, characteristics, and approximate quantity of the materials spilled or leaked; approximate quantity of the materials discharged from the facility's storm water conveyance system; the cleanup or remedial actions that have occurred or are planned; the approximate remaining quantity of materials that have the potential to be discharged; and the preventive measures taken to ensure spills or leaks of the material do not reoccur.

e. NSWDs

The Discharger shall:

i. Ensure the SWPPP includes an evaluation of the facility that identifies all NSWDs, sources, and drainage areas;

DRAFT

ii. Ensure the SWPPP includes an evaluation of all drains (inlets and outlets) that identifies connections to the storm water conveyance system;

iii. Ensure the SWPPP includes a description of how all unauthorized NSWDs have been eliminated; and,

iv. Ensure all NSWDs are described in the SWPPP. This description shall include the source, quantity, frequency, and characteristics of the NSWDs, associated drainage area, and whether it is an authorized or unauthorized NSWD in accordance with Section IV.

f. Erodible Surfaces

The Discharger shall ensure the SWPPP includes a description of the facility locations where soil erosion may be caused by industrial activity, contact with storm water, authorized and unauthorized NSWDs, or run-on from areas surrounding the facility.

2. Assessment of Potential Pollutant Sources

a. The Discharger shall ensure that the SWPPP includes a narrative assessment of all areas of industrial activity with potential industrial pollutant sources. At a minimum, the assessment shall include:

i. The areas of the facility with likely sources of pollutants in industrial storm water discharges and authorized NSWDs;

ii. The pollutants likely to be present in industrial storm water discharges and authorized NSWDs;

iii. The approximate quantity, physical characteristics (e.g., liquid, powder, solid, etc.), and locations of each ~~significant~~ industrial material handled, produced, stored, recycled, or disposed;

iv. The degree to which the pollutants associated with those materials may be exposed to, and mobilized by contact with, storm water;

v. The direct and indirect pathways by which pollutants may be exposed to storm water or authorized NSWDs;

vi. All sampling, visual ~~monitoring~~observation, and inspection records;

vii. The effectiveness of existing BMPs to reduce or prevent pollutants in industrial storm water discharges and authorized NSWDs; ~~and,~~

viii. The ~~predicted~~estimated effectiveness of implementing, to the extent feasible, minimum BMPs to reduce or prevent pollutants in industrial storm water discharges and authorized NSWDs; and.~~.~~

ix. The identification of the industrial pollutants related to the receiving waters with 303(d) listed impairments identified in Appendix 3 or approved TMDLs that may be causing or contributing to an exceedance of a water quality standard~~WQS~~ in the receiving waters.

b. Based upon the assessment above, Dischargers shall identify in the SWPPP any areas of the facility where the minimum BMPs described in subsection H.1 below will not adequately reduce or prevent ~~or reduce~~ pollutants in storm water discharges in compliance with Section V.A. Dischargers shall identify any advanced BMPs, as described in subsection H.2 below, for those areas.

c. Based upon the assessment above, Dischargers shall identify any drainage areas with no exposure to industrial activities and materials in accordance with the definitions in Section XVII.

d. Based upon the assessment above, Dischargers shall identify any additional parameters, beyond the required parameters in Section XI.B.6 that indicate the presence of pollutants in industrial storm water discharges.

H. Best Management Practices (BMPs)

1. Minimum BMPs

The Discharger shall, to the extent feasible, implement and maintain all of the following minimum BMPs to reduce or prevent pollutants in industrial storm water discharges.[14]

a. Good Housekeeping

The Discharger shall:

i. Observe all outdoor areas associated with industrial activity; including storm water discharge locations, drainage areas, conveyance systems, waste handling/disposal areas, and perimeter areas impacted by off-facility materials or storm water run-on to determine housekeeping needs. Any identified debris, waste, spills, tracked materials, or leaked materials shall be cleaned and disposed of properly;

ii. Minimize or prevent material tracking;

iii. Minimize dust generated from industrial materials or activities;

[14] For the purposes of this General Permit, the requirement to implement BMPs "to the extent feasible" requires Dischargers to select, design, install and implement BMPs that reduce or prevent discharges of pollutants in their storm water discharge in a manner that reflects best industry practice considering technological availability and economic practicability and achievability.

iv. Ensure that all facility areas impacted by rinse/wash waters are cleaned as soon as possible;

v. Cover all stored industrial materials that can be readily mobilized by contact with storm water;

vi. Contain all stored non-solid industrial materials or wastes (e.g., particulates, powders, shredded paper, etc.)~~liquid, powder, etc.)~~ that can be transported or dispersed ~~via~~ by the wind or contact with storm water;

vii. Prevent disposal of any rinse/wash waters or industrial materials into the storm water conveyance system;

viii. Minimize storm water discharges from non-industrial areas (e.g., storm water flows from employee parking area) that contact industrial areas of the facility; and,

ix. Minimize authorized NSWDs from non-industrial areas (e.g., potable water, fire hydrant testing, etc.) that contact industrial areas of the facility.

b. Preventive Maintenance

The Discharger shall:

i. Identify all equipment and systems used outdoors that may spill or leak pollutants;

ii. Observe the identified equipment and systems to detect leaks, or identify conditions that may result in the development of leaks;

iii. Establish an appropriate schedule for maintenance of identified equipment and systems; and,

iv. Establish procedures for prompt maintenance and repair of equipment, and maintenance of systems when conditions exist that may result in the development of spills or leaks.

c. Spill and Leak Prevention and Response

The Discharger shall:

i. Establish procedures and/or controls to minimize spills and leaks;

ii. Develop and implement spill and leak response procedures to prevent industrial materials from discharging through the storm water conveyance system. Spilled or leaked industrial materials shall be cleaned promptly and disposed of properly;

iii. Identify and describe all necessary and appropriate spill and leak response equipment, location(s) of spill and leak response

DRAFT

equipment, and spill or leak response equipment maintenance procedures; and,

iv. Identify and train appropriate spill and leak response personnel.

d. Material Handling and Waste Management

The Discharger shall:

i. Prevent or minimize handling of industrial materials or wastes that can be readily mobilized by contact with storm water during a storm event;

ii. Contain all stored non-solid industrial materials or wastes (e.g., particulates, powders, shredded paper, etc.) that can be transported or dispersed ~~via~~by the wind ~~erosion~~ or contact with storm water ~~during handling~~;

iii. Cover industrial waste disposal containers and industrial material storage containers that contain industrial materials when not in use;

iv. Divert run-on and storm water generated from within the facility away from all stockpiled materials;

v. Clean all spills of industrial materials~~/~~ or wastes that occur during handling in accordance with the spill response procedures (Section X.H.1.c~~e~~); and,

vi. Observe and clean as appropriate, any outdoor material~~/~~ or waste handling equipment or containers that can be contaminated by contact with industrial materials or wastes.

e. Erosion and Sediment Controls

For each erodible surface facility location identified in the SWPPP (Section X.G.1.f), the Discharger shall:

i. Implement effective wind erosion controls;

ii. Provide effective stabilization for inactive areas, finished slopes, and other erodible areas prior to a forecasted storm event;

iii. Maintain effective perimeter controls and stabilize all site entrances and exits to sufficiently control discharges of erodible materials from discharging or being tracked off the site;

iv. Divert run-on and storm water generated from within the facility away from all erodible materials; and,

v. If sediment basins are implemented, ensure compliance with the design storm standards in Section X.H.6.

f. Employee Training Program

The Discharger shall:

i. Ensure that all team members implementing the various compliance activities of this General Permit are ~~adequately~~properly trained to implement the requirements of this General Permit, including but not limited to: BMP implementation, BMP effectiveness evaluations, ~~V~~visual observations, and ~~M~~monitoring activities. If a Discharger enters Level 1 status, ~~all personnel~~appropriate team members shall be trained by a QISP;

ii. Prepare or acquire appropriate training manuals or training materials;

iii. Identify which personnel need to be trained, their responsibilities, and the type of training they shall receive;

iv. Provide a training schedule; and,

v. Maintain documentation of all completed training classes and the personnel that received training in the SWPPP.

g. Quality Assurance and Record Keeping

The Discharger shall:

i. Develop and implement management procedures to ensure that appropriate staff implements all elements of the SWPPP, including the Monitoring Implementation Plan;

ii. Develop a method of tracking and recording the implementation of BMPs identified in the SWPPP; and~~,~~

iii. Maintain the BMP implementation records, training records, and records related to any spills and clean-up related response activities for a minimum of five (5) years (Section XXI.J.4).

2. Advanced BMPs

a. In addition to the minimum BMPs described in Section X.H.1, the Discharger shall, to the extent feasible, implement and maintain any advanced BMPs identified in Section X.G.2.b, necessary to reduce or prevent discharges of pollutants in its storm water discharge in a manner that reflects best industry practice considering technological availability and economic practicability and achievability.

b. Advanced BMPs may include one or more of the following BMPs:

i. Exposure Minimization BMPs

These include storm resistant shelters (either permanent or temporary) that prevent the contact of storm water with the identified industrial materials or area(s) of industrial activity.

ii. Storm Water Containment and Discharge Reduction BMPs

These include BMPs that divert, infiltrate, reuse, contain, retain, or reduce the volume of storm water runoff. Dischargers are encouraged to utilize BMPs that infiltrate or reuse storm water where feasible.

iii. Treatment Control BMPs

This is the implementation of one or more mechanical, chemical, biologic, or any other treatment technology that will meet the treatment design standard.

iv. Other Advanced BMPs

Any additional BMPs not described in subsections b.i through iii above that are necessary to meet the effluent limitations of this General Permit.

3. Temporary Suspension of Industrial Activities

For facilities that plan to temporarily suspend industrial activities for ten (10) or more consecutive calendar days during a reporting year, the Discharger may also suspend monitoring if it is infeasible to conduct monitoring while industrial activities are suspended (e.g., the facility is not staffed, or the facility is remote or inaccessible) and the facility has been stabilized. The Discharger shall include in the SWPPP the BMPs necessary to achieve compliance with this General Permit during the temporary suspension of the industrial activity. Once all necessary BMPs have been implemented to stabilize the facility, the Discharger is not required to:

a. Perform monthly visual observations (Section XI.A.1.a.); or,

b. Perform sampling and analysis (Section XI.B.) if it is infeasible to do so (e.g. facility is remotely located).

The Discharger shall upload via SMARTS (7) seven calendar days prior to the planned temporary suspension of industrial activities:

i. SWPPP revisions specifically addressing the facility stabilization BMPs;

ii. The justification for why monitoring is infeasible at the facility during the period of temporary suspension of industrial activities;

iii. The date the facility is fully stabilized for temporary suspension of industrial activities; and,

iv. The projected date that industrial activities will resume at the facility.

c. Upon resumption of industrial activities at the facility, the Discharger shall, via SMARTS, confirm and/or update the date the facility's industrial activities have resumed. At this time, the Discharger is required to resume all compliance activities under this General Permit.

d. The Regional Water Boards may review the submitted information pertaining to the temporary suspension of industrial activities. Upon review, the Regional Water Board may request revisions or reject the Discharger's request to temporarily suspend monitoring.

4. BMP Descriptions

a. The Discharger shall ensure that the SWPPP identifies each BMP being implemented at the facility, including:

i. The pollutant(s) that the BMP is designed to reduce or prevent in industrial storm water discharges;

ii. The frequency, time(s) of day, or conditions when the BMP is scheduled for implementation;

iii. The locations within each area of industrial activity or industrial pollutant source where the BMP shall be implemented;

iv. The individual and/or position responsible for implementing the BMP;

v. The procedures, including maintenance procedures, and/or instructions to implement the BMP effectively;

vi. The equipment and tools necessary to implement the BMP effectively; and,

vii. The BMPs that may require more frequent visual observations beyond the monthly visual observations as described in Section XI.A.1.

b. The Discharger shall ensure that the SWPPP identifies and justifies each minimum BMP or applicable advanced BMP not being implemented at the facility because they do not reflect best industry practice considering technological availability and economic practicability and achievability.

DRAFT

c. The Discharger shall identify any BMPs described in subsection a above that are implemented in lieu of any of the minimum or applicable advanced BMPs.

5. BMP Summary Table

The Discharger shall prepare a table summarizing each identified area of industrial activity, the associated industrial pollutant sources, the industrial pollutants, and the BMPs being implemented.

6. Design Storm Standards for Treatment Control BMPs

All new treatment control BMPs employed by the Discharger shall be designed to comply with design storm standards in this Section~~.~~, except as provided in an Industrial Activity BMP Demonstration (Section XII.D.2.a). A Factor of Safety shall be incorporated into the design of all treatment control BMPs to ensure that storm water is sufficiently treated throughout the life of the treatment control BMPs. The design storm standards for treatment control BMPs are as follows:

a. Volume-based BMPs: The Discharger, at a minimum, shall calculate[15] the volume to be treated using one of the following methods:

i. The volume of runoff produced from an 85th percentile 24-hour storm event~~;~~, as determined from local, historical rainfall records;

ii. The volume of runoff produced by the 85th percentile 24-hour storm event, determined as the maximized capture runoff volume for the facility, from the formula recommended in the Water Environment Federation's Manual of Practice;[16] or,

iii. The volume of annual runoff ~~based on unit basin storage volume,~~required to achieve ~~90~~80% or more ~~volume~~ treatment ~~by~~, determined in accordance with the ~~method recommended~~methodology set forth in the latest edition of California Stormwater Best Management Practices Handbook~~.~~ [17][18], using local, historical rainfall records.

b. Flow-based BMPs: The Discharger shall calculate the flow needed to be treated using one of the following methods:

[15] All hydrologic calculations shall be certified by a California licensed professional engineer in accordance with the Professional Engineers Act (Bus. & Prof. Code § 6700, et seq).

[16] Water Environment Federation (WEF). Manual of Practice No. 23/ ASCE Manual of Practice No. 87, cited in chapter 5 (1998 Edition) and Cited in Chapter 3 (2012 Edition) .

[17] ~~California Stormwater Quality Association. Stormwater Best Management Practice New Development and Redevelopment Handbook. < http://www.casqa.org/ >. [as of July 3, 2013].~~

[18] California Stormwater Quality Association. Stormwater Best Management Practice New Development and Redevelopment Handbook. < http://www.casqa.org/ >. [as of July 3, 2013].

i. The maximum flow rate of runoff produced from a rainfall intensity of at least 0.2 ~~inch/hr~~inches per hour for each hour of a storm event;

ii. The maximum flow rate of runoff produced by the 85th percentile hourly rainfall intensity, as determined from local historical rainfall records, multiplied by a factor of two; or,

iii. The maximum flow rate of runoff, as determined using local historical rainfall records, that achieves approximately the same reduction in total pollutant loads ~~and flows~~ as would be achieved by ~~mitigation~~ treatment of the 85th percentile hourly rainfall intensity multiplied by a factor of two.

I. MONITORING IMPLEMENTATION PLAN ~~(MIP)~~

The Discharger shall prepare a Monitoring Implementation Plan in accordance with the requirements of this General Permit. The Monitoring Implementation Plan shall be included in the SWPPP and ~~. The MIP~~ shall include the following items:

1. An identification of team members assigned to conduct the monitoring requirements;

2. A description of the following in accordance with Attachment H~~, to include~~:

   a. Discharge locations;

   b. Visual observation procedures; and,

   c. Visual observation response procedures related to monthly visual observations and sampling event visual observations~~; and,~~.

3. Justifications for any of the following that are applicable to the facility:

   a. Alternative discharge locations in accordance with Section XI.C.3;

   b. Representative Sampling Reduction ~~(RSR)~~ in accordance with Section XI.C.4; or,

   c. Qualified Combined Samples ~~(QCS)~~ in accordance with Section XI.C.5.

4. Procedures for field instrument calibration instructions, including calibration intervals specified by the manufacturer; and,~~.~~

5. An example Chain of Custody form used when handling and shipping water quality samples to the lab.

DRAFT

XI. MONITORING

A. Visual Observations

1. Monthly Visual Observations

   a. At least once per calendar month, the Discharger shall visually observe each drainage area for the following:

      i. The presence or indications of prior, current, or potential unauthorized NSWDs and their sources;

      ii. Authorized NSWDs, sources, and associated BMPs to ensure compliance with Section IV.B.3; and,

      iii. Outdoor industrial equipment and storage areas, outdoor industrial activities areas, BMPs, and ~~any~~all other potential source of industrial pollutants.

   b. The monthly visual observations shall be conducted during daylight hours of scheduled facility operating hours and on days without precipitation.

   c. The Discharger shall provide an explanation in the Annual Report for uncompleted monthly visual observations.

2. Sampling Event Visual Observations

   Sampling event visual observations shall be conducted at the same time sampling occurs at a discharge location. At each discharge location where a sample is obtained, the Discharger shall observe the discharge of storm water associated with industrial activity.

   a. The Discharger shall ensure that visual observations of ~~discharge from contained~~ storm water~~, and corresponding documentation,~~ discharged from containment sources (e.g. secondary containment or storage ponds) are conducted at the time that the discharge is sampled.

   ~~a.~~b. The Discharger shall ensure that visual observations and sampling of storm water discharges from volume-based or flow-based treatment BMPs and any bypass that occurs are conducted at the same time.

   ~~b.~~c. The Discharger shall visually observe and record the presence or absence of floating and suspended materials, oil and grease, discolorations, turbidity, odors, trash/debris, and source(s) of any discharged pollutants.

   ~~c.~~d. In the event that a discharge location is not visually observed during the sampling event, the Discharger shall record which discharge

DRAFT

locations were not observed during sampling or that there was no discharge from the discharge location.

~~d.~~e. The Discharger shall provide an explanation in the Annual Report for uncompleted sampling event visual observations.

3. Visual Observation Records

   The Discharger shall maintain records of all visual observations. Records shall include the date, approximate time, locations observed, presence and probable source of any observed pollutants, name of person(s) that conducted the observations, and any response actions and/or additional SWPPP revisions necessary in response to the visual observations.

4. ~~Dischargers~~The Discharger shall revise BMPs as necessary when the visual observations indicate pollutant sources have not been adequately addressed in the SWPPP.

B. Sampling and Analysis

1. A Qualifying Storm Event (QSE) is a precipitation event that:

   a. Produces a discharge for at least one drainage area; and,

   b. Is ~~P~~preceded by 48 hours with no discharge from any drainage area.

2. The Discharger shall collect and analyze storm water samples from two (2) QSEs within the first half of each reporting year (July 1 to December 31), and two (2) QSEs within the second half of each reporting year (January 1 to June 30).

3. Compliance Group Participants are only required to collect and analyze storm water samples from one (1) QSE within the first half of each reporting year (July 1 to December 31)~~,~~ and one (1) QSE within the second half of the reporting year (January 1 to June 30).

4. Except as provided in Section XI.C.4 (Representative Sampling Reduction), samples shall be collected from each drainage area at all discharge locations. The samples must be:

   a. Representative of storm water associated with industrial activities and any commingled authorized NSWDs; or,

   b. Associated with the discharge of contained storm water.

5. Samples from each discharge location shall be collected within four (4) hours of:

   a. The start of the discharge; or,

DRAFT

b. The start of facility operations if the QSE occurs within the previous 12-- hour period (e.g., for storms with discharges that begin during the night for facilities with day-time operating hours). Sample collection is required during scheduled facility operating hours and when sampling conditions are safe in accordance with Section XI.C.6.a.ii.

6. The Discharger shall analyze all collected samples -for the following parameters:

   a. Total suspended solids (TSS) and oil ~~&~~and grease (O&G);

   b. pH (see Section XI.C.2);

   c. Additional parameters identified by the Discharger on a facility-specific basis that serve as indicators of the presence of all industrial pollutants identified in the pollutant source assessment (Section X.G.2). These additional parameters may be modified (added or removed) in accordance with any updated SWPPP pollutant source assessment;

   d. Additional applicable parameters listed in Table 1 below. These parameters are dependent on the facility Standard Industrial Classification (SIC) code(s);

   e. Additional applicable industrial parameters related to receiving waters with 303(d) listed impairments or approved TMDLs based on the assessment in Section X.G.2.~~xi~~a.ix. Test methods with lower detection limits may be necessary when discharging to receiving waters with 303(d) listed impairments or TMDLs;

   f. Additional parameters required by the Regional Water Board. The Discharger shall contact its Regional Water Board to determine appropriate analytical test methods for parameters not listed in Table 2 below. These analytical test methods will be added to SMARTS; and~~,~~

   g. For discharges subject to Subchapter N, ~~any~~ additional parameters specifically required by Subchapter N. If the discharge is subject to ELGs, the Dischargers shall contact the Regional Water Board to determine appropriate analytical methods for parameters not listed in Table 2 below.

7. The Discharger shall select corresponding NALs, analytical test methods, ~~detection limits~~, and reporting units from the list provided in Table 2 below. SMARTS will be updated over time to add additional acceptable analytical test methods. Dischargers may propose an analytical test method for any parameter or pollutant that does not have an analytical test method specified in Table 2 or in SMARTS. Dischargers may also propose analytical test methods with substantially similar or more stringent method

detection limits than existing approved analytical test methods. Upon approval, the analytical test method will be added to SMARTS.

8. The Discharger shall ensure that the collection, preservation and handling of all storm water samples are in accordance with Attachment H, Storm Water Sample Collection and Handling Instructions.

9. Samples from different discharge locations shall not be combined or composited ~~prior to field measurements or laboratory analysis.~~except as allowed in Section XI.C.5 (Qualified Combined Samples).

10. The Discharger shall ensure that all laboratory analyses are conducted according to test procedures under 40 Code of Federal Regulations part 136, including the observation of holding times, unless other test procedures have been specified in this General Permit or by the Regional Water Board.

11. Sampling Analysis Reporting

    a. The Discharger shall submit all sampling and analytical results for all individual or ~~q~~Qualified ~~c~~Combined ~~s~~Samples ~~(QCS)~~ via SMARTS within 30 days of obtaining all results for each sampling event.

    b. The Discharger shall provide the method detection limit when an analytical result from samples taken is reported by the laboratory as a "non-detect" or less than the method detection limit. A value of zero shall not be reported.

    c. The Discharger shall provide the analytical result from samples taken that is reported by the laboratory as below the minimum level (often referred to as the reporting limit) but above the method detection limit.

    Reported analytical results will be averaged automatically by SMARTS. For any calculations required by this General Permit, ~~all effluent sampling analytical results that are reported by the laboratory as "non-detect" or less than the Method Detection Limit (MDL), a value of zero shall be used. Any results reported by the laboratory as "Detected Not Quantifiable" or less than the Minimum Level (ML) but above the MDL, a value of the MDL plus ½ the difference between the MDL and the ML shall be used.~~SMARTS will assign a value of zero (0) for all results less than the minimum level as reported by the laboratory.

TABLE 1: Additional Analytical Parameters

SIC code	SIC code Description	Parameters*
102X	Copper Ores	COD; N+N
12XX	Coal Mines	Al; Fe
144X	Sand ~~&~~and Gravel	N+N
207X	Fats ~~&~~and Oils	BOD; COD; N+N
2421	Sawmills & Planning Mills	COD; Zn
2426	Hardwood Dimension	COD

2429	Special Product Sawmills	COD
243X	Millwork, Veneer, Plywood	COD
244X	Wood Containers	COD
245X	Wood Buildings & Mobile Homes	COD
2491	Wood Preserving	As; Cu
2493	Reconstituted Wood Products	COD
263X	Paperboard Mills	COD
281X	Industrial Inorganic Chemicals	Al; Fe; N+N
282X	Plastic Materials, Synthetics	Zn
284X	Soaps, Detergents, Cosmetics	N+N; Zn
287X	Fertilizers~~;~~, Pesticides, etc.	Fe; N+N; Pb; Zn; P
301X	Tires, Inner Tubes	Zn
302X	Rubber and Plastic Footwear	Zn
305X	Rubber & Plastic Sealers & Hoses	Zn
306X	Misc. Fabricated Rubber Products	Zn
325X	Structural Clay Products	Al
326X	Pottery & Related Products	Al
3297	Non-Clay Refractories	Al
327X	Concrete, Gypsum, Plaster Products (Except 3274)	Fe
3295	Minerals & Earths	Fe
331X	Steel Works, Blast Furnaces, Rolling ~~&~~and Finishing Mills	Al; Zn
332X	Iron ~~&~~and Steel Foundries	Al; Cu; Fe; Zn
335X	Metal Rolling, Drawing, Extruding	Cu; Zn
336X	Nonferrous Foundries (Castings)	Cu; Zn
34XX	Fabricated Metal Products (Except 3479)	Zn; N+N; Fe; Al
3479	Coating ~~&~~and Engraving	Zn; N+N
4953	Hazardous Waste Facilities	NH3; Mg; COD; As; Cn; Pb; HG; Se; Ag
44XX	Water Transportation	Al; Fe; Pb; Zn
45XX	Air Transportation Facilities[19]	BOD; COD; NH3
4911	Steam Electric Power Generating Facilities	Fe
4953	Landfills ~~&~~and Land Application Facilities	Fe
5015	Dismantling or Wrecking Yards	Fe; Pb; Al
5093	Scrap and Waste Materials ~~——~~(not including source-separated recycling)	Fe; Pb; Al; Zn; COD

***Table 1 Parameter Reference**	
Ag – Silver	**Mg** – Magnesium
Al – Aluminum	**N+N** - Nitrate & Nitrite Nitrogen
As – Arsenic	**NH** – Ammonia
BOD – Biochemical Oxygen Demand	**Ni** – Nickel
Cd - Cadmium	**P** – Phosphorus
Cn – Cyanide	**Se** – Selenium
COD – Chemical Oxygen Demand	**TSS** – Total Suspended Solids
Cu – Copper	**Zn** – Zinc
Fe – Iron	**Pb** – Lead
Hg – Mercury	

[19] Only airports (SIC 4512-4581) where a single Discharger, or a combination of permitted facilities use more than 100,000 gallons of glycol-based deicing chemicals and/or 100 tons or more of urea on an average annual basis, are required to monitor these parameters for those outfalls that collect runoff from areas where deicing activities occur.

DRAFT

TABLE 2: Parameter NAL Values, Test Methods~~, Detection Limits~~, and Reporting Units

PARAMETER	TEST METHOD	~~METHOD DETECTION LIMIT***~~	REPORTING UNITS	ANNUAL NAL	INSTANTANEOUS MAXIMUM NAL
pH*	See Section XI.C.2	-	pH units	N/A	Less than 6.0 Greater than 9.0
Suspended Solids (TSS)*, Total	SM 2540-D	~~1.0~~	mg/L	100	400
Oil & Grease (O&G)*, Total	EPA 1664A	~~1.50~~	mg/L	15	25
Zinc, Total (H)	EPA 200.8	~~0.0005~~	mg/L	0.26**	
Copper, Total (H)	EPA 200.8	~~0.0005~~	mg/L	0.0332**	
Cyanide, Total	~~EPA 3135.2I~~SM 4500–CN C, D, or E	~~0.003~~	mg/L	0.022	
Lead, Total (H)	EPA 200.8	~~0.0005~~	mg/L	0.262**	
Chemical Oxygen Demand (COD)	SM 5220C	~~1.0~~	mg/L	120	
Aluminum, Total	EPA 200.8	~~0.0005~~	mg/L	0.75	
Iron, Total	EPA 200.7	~~0.005~~	mg/L	1.0	
Nitrate + Nitrite Nitrogen	SM 4500-NO3- E	~~0.01~~	mg/L as N	0.68	
Total Phosphorus	SM 4500-P B+E	~~0.05~~	mg/L as P	2.0	
Ammonia (as N)	SM 4500-NH3 B+C or E	~~0.1~~	mg/L	2.14	
Magnesium, total	EPA 200.7	~~0.0005~~	mg/L	0.064	
Arsenic, Total (c)	EPA 200.8	~~0.0005~~	mg/L	0.15	
Cadmium, Total (H)	EPA 200.8	~~0.0002~~	mg/L	0.0053**	
Nickel, Total (H)	EPA 200.8	~~0.0005~~	mg/l	1.02**	
Mercury, Total	EPA 245.1	~~0.0001~~	mg/L	0.0014	
Selenium, Total	EPA 200.8	~~0.0005~~	mg/L	0.005	
Silver, Total (H)	EPA 200.8	~~0.0002~~	mg/L	0.0183**	
Biochemical Oxygen Demand (BOD)	SM 5210B	~~3.0~~	mg/L	30	

SM – Standard Methods for the Examination of Water and Wastewater, 18th edition
EPA – U.S. EPA test methods
(H) – Hardness dependent
* Minimum parameters required by this General Permit
**The NAL is the highest value used by U.S. EPA based on their hardness table in the 2008 MSGP.
~~***More stringent test methods with lower detection limits may be used.~~

DRAFT

C. Methods and Exceptions

1. The Discharger shall comply with the monitoring methods in this General Permit and Attachment H.

2. pH Methods

   a. Dischargers that are not subject to Subchapter N ELGs mandating pH analysis related to acidic or alkaline sources and have never entered Level 1 status for pH, are eligible to screen for pH using wide range litmus pH paper or other equivalent pH test kits. The pH screen shall be performed as soon as practicable, but no later than 15 minutes after the sample is collected.

   b. Dischargers subject to Subchapter N ELGs ~~or have~~ shall either analyze samples for pH using methods in accordance with 40 Code of Federal Regulations 136 for testing storm water or use a calibrated portable instrument for pH.

   c. Dischargers that enter Level 1 status (see Section XII.C) for pH shall, in the subsequent reporting years, analyze for pH using ~~-~~methods in accordance with 40 Code of Federal Regulations 136 or use a calibrated portable instrument for pH.

   d. Dischargers using a calibrated portable instrument for pH shall ensure that all field measurements are conducted in accordance with the accompanying manufacturer's instructions.

3. Alternative Discharge Locations

   The Discharger is required to identify, when practicable, alternative discharge locations for any discharge locations identified in accordance with Section XI.B.4 if the facility's discharge locations are:

   a. Affected by storm water run-on from surrounding areas that cannot be controlled; and/or,

   b. Difficult to observe or sample (e.g. submerged discharge outlets, dangerous discharge location accessibility).

4. Representative Sampling Reduction ~~(RSR)~~

   a. The Discharger may reduce the number of locations to be sampled in each drainage area (e.g., roofs with multiple downspouts, loading/unloading areas with multiple storm drains) if the industrial activities and physical characteristics (grade, surface materials, etc.) of the drainage area for each location to be sampled are substantially similar to one another. To qualify for the Representative Sampling Reduction, ~~RSR,~~ the Discharger shall provide a Representative Sampling

Reduction ~~RSR~~ justification in the Monitoring Implementation Plan~~MIP~~ section of the SWPPP.

b. The Representative Sampling Reduction ~~RSR~~ justification shall include:

i. Identification and description of each drainage area and corresponding discharge location(s);

ii. A description of the industrial activities that occur throughout the drainage area;

iii. A description of the physical characteristics of the drainage area;

iv. A rationale that demonstrates that the industrial activities and physical characteristics of the drainage area(s) are substantially similar; and,

v. An identification of the discharge location(s) selected for representative sampling, and rationale demonstrating that the selected location(s) to be sampled ~~-~~are representative of the discharge from the entire drainage area.

c. A Discharger that satisfies the conditions of subsection 4.b.i through v above shall submit and certify via SMARTS the revisions to the Monitoring Implementation Plan~~MIP~~ that includes the Representative Sampling Reduction ~~RSR~~ justification.

d. Upon submittal of the Representative Sampling Reduction ~~RSR~~ justification, the Discharger may reduce the number of locations to be sampled in accordance with the Representative Sampling Reduction ~~RSR~~ justification. The Regional Water Board may reject the Representative Sampling Reduction ~~RSR~~ justification and/or request additional supporting documentation. In such instances, the Discharger is ineligible for the Representative Sampling Reduction ~~RSR~~ until the Regional Water Board approves the Representative Sampling Reduction ~~RSR~~ justification.

5. Qualified Combined Samples ~~(QCS)~~

a. The Discharger may authorize ~~the lab~~an analytical laboratory to combine samples of equal volume from as many as four (4) discharge locations if the industrial activities and physical characteristics (grade, surface materials, etc.) within each of the drainage areas are substantially similar to one another.

b. The Qualified Combined Samples ~~QCS~~ justification shall include:

i. Identification and description of each drainage area and corresponding discharge locations;

ii. A description of the industrial activities that occur throughout the drainage area;

iii. A description of the physical characteristics of the drainage area; and,

iv. A rationale that demonstrates that the industrial activities and physical characteristics of the drainage area(s) are substantially similar.

c. A Discharger that satisfies the conditions of subsection 5.b.i through iv above shall submit and certify via SMARTS the revisions to the Monitoring Implementation Plan~~MIP~~ that includes the Qualified Combined Samples ~~QCS~~ justification.

d. Upon submittal of the Qualified Combined Samples ~~QCS~~ justification revisions in the Monitoring Implementation Plan~~MIP~~, the Discharger may authorize the lab to combine samples of equal volume from as many as four (4) drainage areas. The Regional Water Board may reject the Qualified Combined Samples ~~QCS~~ justification and/or request additional supporting documentation. In such instances, the Discharger is ineligible for the Qualified Combined Samples ~~QCS~~ justification until the Regional Water Board approves the Qualified Combined Samples ~~QCS~~ justification.

e. Regional Water Board approval is necessary to combine samples from more than four (4) discharge locations.

6. Sample Collection and Visual Observation Exceptions

a. Sample collection and visual observations are not required under the following conditions:

i. During dangerous weather conditions such as flooding or electrical storms; or~~,~~

ii. Outside of scheduled facility operating hours. The Discharger is not precluded from collecting samples or conducting visual observations outside of scheduled facility operating hours.

b. In the event that samples are not collected, or visual observations are not conducted in accordance with Section XI.B.5 due to these exceptions, an explanation shall be included in the Annual Report.

c. Sample collection is not required for drainage areas with no exposure to industrial activities and materials in accordance with the definitions in Section XVII.

7. Sampling Frequency Reduction ~~(SFR)~~ Certification
   a. Dischargers are eligible to reduce the number of QSEs sampled each reporting year in accordance with the following requirements:

      i. Results from four (4) consecutive QSEs that were sampled (QSEs ~~can~~may be from different reporting years) did not exceed any NALs as defined in Section XII.A; and

      ii. The Discharger is in full compliance with the requirements of this General Permit and has updated, certified and submitted via SMARTS all documents, data, and reports required by this General Permit during the time period in which samples were collected.

   b. The Regional Water Board may notify a Discharger that it may not reduce the number of QSEs sampled each reporting year if the Discharger is subject to an enforcement action.

   c. An eligible Discharger shall certify via SMARTS that it meets the conditions in subsection 7.a above.

   d. Upon Sampling Frequency Reduction ~~SFR~~ certification, the Discharger shall collect and analyze samples from one (1) QSE within the first half of each reporting year (July 1 to December 31), and one (1) QSE within the second half of each reporting year (January 1 to June 30). All other monitoring, sampling, and reporting requirements remain in effect.

   e. Dischargers who participate in a Compliance Group and certify a Sampling Frequency Reduction ~~SFR~~ are only required to collect and analyze storm water samples from one (1) QSE within each reporting year.

   ~~Regional Water Boards~~

   f. A Discharger may ~~reject a~~reduce sampling per the Sampling Frequency Reduction ~~SFR~~ certification ~~and/~~unless notified by the Regional Water Board that: (1) the Sampling Frequency Reduction certification has been rejected or ~~request~~(2) additional supporting documentation must be submitted. In such instances, a Discharger is ineligible for the Sampling Frequency Reduction ~~SFR~~ until the Regional Water Board provides Sampling Frequency Reduction ~~SFR~~ certification approval. Revised Sampling Frequency Reduction ~~SFR~~ certifications shall be certified and submitted via SMARTS by the Discharger.

   g. A Discharger loses its Sampling Frequency Reduction ~~SFR~~certification if an NAL exceedance occurs (Section XII.A).

D. Facilities Subject to Federal Storm Water Effluent Limitation Guidelines (ELGs)

1. In addition to the other requirements in this General Permit, Dischargers with facilities subject to storm water ELGs in Subchapter N shall:

   a. Collect and analyze samples from QSEs for each regulated pollutant specified in the appropriate category in Subchapter N as specified in Section XI.B;

   b. For Dischargers with facilities subject to 40 Code of Federal Regulations parts 419[20] and 443[21], estimate or calculate the volume of industrial storm water discharges from each drainage area subject to the ELGs and the mass of each regulated pollutant as defined in parts 419 and 443; and.

   c. Ensure that the volume/mass estimates or calculations required in subsection b are completed by a California licensed professional engineer.

2. Dischargers subject to Subchapter N shall submit the information in Section XI.D.1.a through c in their Annual Report.

3. Dischargers with facilities subject to storm water ELGs in Subchapter N are ineligible for the Representative Sampling Reduction RSR in Section XI.C.4.

XII. EXCEEDANCE RESPONSE ACTIONS (ERAs)

A. NALs and NAL Exceedances

The Discharger shall perform sampling, analysis and reporting in accordance with the requirements of this General Permit and shall compare the results to the two types of NAL values found in Table 2 to determine whether either type of NAL has been exceeded for each applicable parameter. The two types of potential NAL exceedances are as follows:

1. Annual NAL exceedance: The Discharger shall determine the average concentration for each parameter using the results of all the sampling and analytical results for the entire facility for the reporting year (i.e., all "effluent" data). The Discharger shall compare the average concentration for each parameter to the corresponding annual NAL values in Table 2. For Dischargers using composite sampling or flow-weighted measurements in accordance with standard practices, the average concentrations shall be calculated in accordance with the U.S. EPA's NPDES Storm Water

[20] Part 419 - Petroleum refining point source category
[21] Part 443 - Effluent limitations guidelines for existing sources and standards of performance and pretreatment standards for new sources for the paving and roofing materials (tars and asphalt) point source category

Sampling Guidance Document.[22] An annual NAL exceedance occurs when the average of all the analytical results for a parameter from samples taken within a reporting year exceeds the annual NAL value for that parameter listed in Table 2; and,

2. Instantaneous maximum NAL exceedance: The Discharger shall compare all sampling and analytical results from each distinct sample (individual or combined as authorized by XI.C.5) to the corresponding instantaneous maximum NAL values in Table 2. An instantaneous maximum NAL exceedance occurs when two (2) or more analytical results from samples taken for any single parameter within a reporting year exceed the instantaneous maximum NAL value (for TSS and O&G) or are outside of the instantaneous maximum NAL range for pH.

B. Baseline Status

At the beginning of a Discharger's NOI Coverage, all Dischargers have Baseline status for all parameters.

C. Level 1 Status

A Discharger's Baseline status for any given parameter shall change to Level 1 status if sampling results indicate an NAL exceedance for that parameter in any subsequent reporting year. Level 1 status will commence on July 1 following the reporting year during which the exceedance(s) occurred.[23]

1. Level 1 ERA Evaluation

a. ~~Within 60 days~~By October 1 following commencement of ~~entering~~ Level 1 status~~,~~ for any parameter with sampling results indicating an NAL exceedance, the Discharger shall ~~complete~~:

b. Complete an evaluation, with the assistance of a QISP, of the industrial pollutant sources at the facility that are or may be related to the NAL exceedance(s); and,

~~a.~~c. Identify in the evaluation the corresponding BMPs ~~and implementation measures~~ in the SWPPP~~. The evaluation shall identify~~ and any additional BMPs and SWPPP revisions necessary to prevent ~~or reduce~~ future NAL exceedances and to comply with the requirements of this General Permit. Although the evaluation may focus on the drainage areas where the NAL exceedance(s) occurred, all drainage areas shall be evaluated.

[22] U.S. EPA. NPDES Storm Water Sampling Guidance Document. <http://www.epa.gov/npdes/pubs/owm0093.pdf >. [as of February~~July 3~~4, 201~~3~~4]

[23] For all sampling results reported before June 30th of the preceding reporting year. If sample results indicating an NAL exceedance are submitted after June 30th, the Discharger will change status once those results have been reported.

2. Level 1 ERA Report

a. Based upon the above evaluation, the Discharger shall, as soon as practicable but no later than January 1 following commencement of Level 1 status ~~subsequent reporting year~~:

i. Revise the SWPPP as necessary and implement any additional BMPs identified in the evaluation;

ii. Certify and submit via SMARTS a Level 1 ERA Report prepared by a QISP that includes the following:

1) A summary of the Level 1 ERA ~~e~~Evaluation required in subsection C.1 above; and,~~.~~

2) ~~An implementation schedule and~~ A detailed description ~~for~~of the SWPPP revisions and any additional BMPs ~~and SWPPP revisions~~ for each parameter that exceeded an NAL.

iii. Certify and submit via SMARTS the QISP's identification number, name, and contact information (telephone number, e-mail address).

~~a.~~b. A Discharger's Level 1 status for a parameter will return to Baseline status once a Level 1 ERA report has been completed, all identified additional BMPs have been implemented, and results from four (4) ~~subsequent and~~ consecutive QSEs that were sampled subsequent to BMP implementation indicate no additional NAL exceedances for that parameter.

3. NAL Exceedances Prior to Implementation of Level 1 Status BMPs.

Prior to the implementation of an additional BMP identified in the Level 1 ERA Evaluation or October 1, whichever comes first, sampling results for any parameter(s) being addressed by that additional BMP will not be included in the calculations of annual average or instantaneous NAL exceedances in SMARTS.

D. Level 2 Status

A Discharger's Level 1 status for any parameter shall change to Level 2 status if sampling results indicate an NAL exceedance in any subsequent reporting year for the same parameter~~.~~ while the Discharger is in Level 1. Level 2 status

will commence on July 1 following the reporting year during which the NAL exceedance(s) occurred.[24]

1. Level 2 ERA Action Plan

   a. Dischargers with Level 2 status shall ~~prepare~~certify and submit via SMARTS a Level 2 ERA Action Plan prepared by a QISP that addresses each new Level 2 NAL exceedance by January 1 following the reporting year during which the NAL exceedance(s) occurred. For each new Level 2 NAL exceedance, the Level 2 Action Plan will identify which of the demonstrations in subsection D.2.a through c the Discharger has selected to perform. A new Level 2 NAL exceedance is any Level 2 NAL exceedance for 1) a new parameter in any drainage area, or 2) the same parameter that is being addressed in an existing Level 2 ERA Action Plan in a different drainage area.

   b. The Discharger shall certify and submit via SMARTS the QISP's identification number, name, and contact information (telephone number, e-mail address) if this information has changed since previous certifications.

   ~~b.~~c. The Level 2 ERA Action Plan shall at a minimum address the drainage areas with corresponding Level 2 NAL exceedances.

   ~~c.~~d. All elements of the Level 2 ERA Action Plan shall be implemented as soon as practicable and completed no later than 1 year after submitting the Level 2 ERA Action Plan.

   ~~d.~~e. The Level 2 ERA Action Plan shall include a schedule and a detailed description of the tasks required to complete the Discharger's selected demonstration(s) as described below in Section D.2.a through c.

2. Level 2 ERA Technical Report

   On January 1 of the reporting year following the submittal of the Level 2 ERA Action Plan, a Discharger~~s~~ with Level 2 status shall certify and submit a Level 2 ERA Technical Report prepared by a QISP that includes one or more of the following demonstrations:

[24] For all sampling results reported before June 30th of the preceding reporting year. If sample results indicating an NAL exceedance are submitted after June 30th, the Discharger will change status ~~once~~upon the date those results have been reported into SMARTS.

a. Industrial Activity BMPs Demonstration

This shall include the following requirements, as applicable:

i. Shall include a description of the industrial pollutant sources and corresponding industrial pollutants that are or may be related to the NAL exceedance(s);

ii. Shall include ~~A~~an evaluation of all pollutant source~~(~~s~~)~~ associated with industrial activity that are or may be related to the NAL exceedance(s);

iii. Where all of the Discharger's implemented BMPs, including additional BMPs identified in the Level 2 ERA Action Plan, achieve compliance with the effluent limitations of this General Permit and are expected to eliminate future NAL exceedance(s), the Discharger shall provide a description and analysis of all implemented BMPs;~~.~~

iv. In cases where all of the Discharger's implemented BMPs, including additional BMPs identified in the Level 2 ERA Action Plan, achieve compliance with the effluent limitations of this General Permit but are not expected to eliminate future NAL exceedance(s), the Discharger shall provide, in addition to a description and analysis of all implemented BMPs:

1) An evaluation of any additional BMPs that would reduce or prevent NAL exceedances;

2) ~~An e~~Estimated costs of the additional BMPs evaluated; and,

3) An analysis describing the basis for the selection of BMPs implemented in lieu of the additional BMPs evaluated but not implemented.

v. The description and analysis of BMPs required in subsection a.iii above shall specifically address the drainage areas where the NAL exceedance(s) responsible for the Discharger's Level 2 status occurred, although any additional Level 2 ERA Action Plan BMPs may be implemented for all drainage areas; and,

vi. ~~An analysis describing the basis for the selection of~~If an alternative design storm standard for treatment control BMPs ~~that have or will be implemented (~~in lieu of the design storm standard for treatment control BMPs in Section X.H.6 in this General Permit~~.~~) will achieve compliance with the effluent limitations of this General Permit, the Discharger shall provide an analysis describing the basis for the selection of the alternative design storm standard.

b. Non-Industrial Pollutant Source Demonstration

This shall include:

i. A statement that the Discharger has determined that the exceedance of the NAL is attributable solely to the presence of non-industrial pollutant sources. (The pollutant may also be present due to industrial activities, in which case the Discharger must demonstrate that the pollutant contribution from the industrial activities by itself does not result in an NAL exceedance.) The sources shall be identified as either run-on from adjacent properties, aerial deposition from man-made sources, or as generated by on-site non-industrial sources;

ii. A statement that the Discharger has identified and evaluated all potential pollutant sources that may have commingled with storm water associated with the Discharger's industrial activity and ~~could~~may be contributing to the NAL exceedance; ~~and,~~

~~ii.~~iii. A description of any on-site industrial pollutant sources and corresponding industrial pollutants that are contributing to the NAL exceedance~~that are or may be discharged;~~;

~~iii.~~iv. An assessment of the relative contributions of the pollutant from (1) storm water run-on to the facility from adjacent properties or non-industrial portions of the Discharger's property or from aerial deposition and (2) the storm water associated with the Discharger's industrial activity;

~~iv.~~v. A summary of all existing BMPs for that parameter; and,

~~v.~~vi. An evaluation of all on-site/off-site analytical monitoring data demonstrating that the NAL exceedances are caused by pollutants in storm water run-on to the facility from adjacent properties or non-industrial portions of the Discharger's property or from aerial deposition.

c. Natural Background Pollutant Source Demonstration

This shall include:

i. A statement that the Discharger has determined that the NAL exceedance ~~of the NAL~~ is attributable solely to the presence of the pollutant in the natural background~~;~~ that has not been disturbed by industrial activities. (The pollutant may also be present due to industrial activities, in which case the Discharger must demonstrate that the pollutant contribution from the industrial activities by itself does not result in an NAL exceedance);

DRAFT

ii. A summary of all data previously collected by the Discharger, or other identified data collectors, that describes the levels of natural background pollutants in the storm water discharge;

iii. A summary of any research and published literature that relates the pollutants evaluated at the facility as part of the Natural Background Source Demonstration;

iv. Map showing the reference site location in relation to facility along with available land cover information;

v. Reference site and test site elevation;

vi. Available geology and soil information for reference and test sites;

vii. Photographs showing site vegetation;

viii. Site reconnaissance survey data regarding presence of roads, outfalls, or other human-made structures; and,

ix. Records from relevant state or federal agencies indicating no known mining, forestry, or other human activities upstream of the proposed reference site.

3. Level 2 ERA Technical Report Submittal

a. The Discharger shall certify and submit via SMARTS the Level 2 ERA Technical Report described in Section D.2 above.

b. The State Water Board and Regional Boards (Water Boards) may review the submitted Level 2 ERA Technical Reports. Upon review of a Level 2 ERA Technical Report, the Water Boards may reject the Level 2 ERA Technical Report and direct the Discharger to take further action(s) to comply with this General Permit.

c. Dischargers with Level 2 status who have submitted the Level 2 ERA Technical Report are only required to annually update the Level 2 ERA Technical Report based upon additional NAL exceedances of the same parameter and same drainage area, facility operational changes, pollutant source(s) changes, and/or information that becomes available via compliance activities (monthly ~~inspections~~visual observations, sampling results, annual evaluation, etc.). The Level 2 ERA Technical Report shall be prepared by a QISP and be certified and submitted via SMARTS by the Discharger with each Annual Report.

d. Dischargers are not precluded from submitting a Level 2 ERA Action Plan or ERA Technical Report prior to entering Level 2 status if information is available to adequately prepare the report and perform the demonstrations described above. A Discharger who chooses to submit a Level 2 ERA Action Plan or ERA Technical Report prior to entering Level 2 status will automatically be placed in Level 2 in accordance to the Level 2 ERA schedule.

4. Eligibility for Returning to Baseline Status

a. Dischargers with Level 2 status who submit an Industrial Activity BMPs Demonstration in accordance with subsection 2.a.i through iii above and have implemented BMPs to prevent future NAL exceedance(s) for the Level 2 parameter(s) shall return to baseline status for that parameter, if results from four (4) subsequent consecutive QSEs sampled indicate no additional NAL exceedance(s) for that parameter(s). If future NAL exceedances occur for the same parameter(s), the Discharger's Baseline status will return to Level 2 status on July 1 in the subsequent reporting year during which the NAL exceedance(s) occurred. These Dischargers shall update the Level 2 ERA Technical Report as required above in Section D.3.c.

b. Dischargers are ineligible to return to baseline status if they submit any of the following:

i. A industrial activity BMP demonstration in accordance with subsection 2.a.iv above;

ii. An non-industrial pollutant source demonstration; or,

iii. A natural background pollutant source demonstration.

5. Level 2 ERA Implementation Extension

a. Dischargers that need additional time to submit the Level 2 ERA Technical Report shall be automatically granted a single time extension for up to six (6) months upon submitting the following items into SMARTS, as applicable:

i. Reasons for the time extension;

ii. A revised Level 2 ERA Action Plan including a schedule and a detailed description of the necessary tasks still to be performed to complete the Level 2 ERA Technical Report; and~~,~~

iii. A description of any additional temporary BMPs that will be implemented while permanent BMPs are being constructed.

b. The Regional Water Boards will review Level 2 ERA Implementation Extensions for completeness and adequacy. Requests for extensions that total more than six (6) months are not granted unless approved in writing by the Water Boards. The Water Boards may (1) reject or revise the time allowed to complete Level 2 ERA Implementation Extensions, (2) identify additional tasks necessary to complete the Level 2 ERA Technical Report, and/or (3) require the Discharger to implement additional temporary BMPs.

XIII. INACTIVE MINING OPERATION CERTIFICATION

A. Inactive mining operations are defined in Part 3 of Attachment A of this General Permit. The Discharger may, in lieu of complying with the General Permit requirements described in subsection B below, certify and submit via SMARTS that their inactive mining operation meets the following conditions:

1. The Discharger has determined and justified in the SWPPP that it is impracticable to implement the monitoring requirements in this General Permit for the inactive mining operation;

2. A SWPPP has been ~~prepared~~ signed (wet signature and license number) by a California licensed professional engineer and is being implemented in accordance with the requirements of this General Permit; and,

3. The facility is in compliance with this General Permit, except as provided in subsection B below.

B. The Discharger who has certified and submitted that they meet the conditions in subsection A above, are not subject to the following General Permit requirements:

1. Monitoring Implementation Plan ~~(MIP)~~ in Section X.I;

2. Monitoring Requirements in Section XI;

3. Exceedance Response Actions (ERAs) in Section XII; and,

4. Annual Report Requirements in Section XVI.

C. Inactive Mining Operation Certification Submittal Schedule

1. The Discharger shall certify and submit via SMARTS NOI coverage PRDs listed in Section II.B.1 and meet the conditions in subsection A above.

2. The Discharger shall annually inspect the inactive mining site and certify via SMARTS no later than July 15th of each reporting year, that their inactive

mining operation ~~still~~continues to meet the conditions in subsection A above~~; and,~~.

3. The Discharger shall have a California licensed professional engineer review and update the SWPPP if there are changes to their inactive mining operation or additional BMPs are needed to comply with this General Permit. Any significant updates to the SWPPP shall be signed (wet signature and license number) by a California license professional engineer.

4. The Discharger shall certify and submit via SMARTS any significantly revised SWPPP within 30 days of the revision(s).

XIV. COMPLIANCE GROUPS AND COMPLIANCE GROUP LEADERS

A. Compliance Group Qualification Requirements

1. Any group of Dischargers of the same industry type or any QISP representing Dischargers of the same industry type may form a Compliance Group. A Compliance Group shall consist of Dischargers that operate facilities with similar types of industrial activities, pollutant sources, and pollutant characteristics (e.g., scrap metals recyclers would join a different group than paper recyclers, truck vehicle maintenance facilities would join a different group than airplane vehicle maintenance facilities, etc.). A Discharger participating in a Compliance Group is termed a Compliance Group Participant. Participation in a Compliance Group is not required. Compliance Groups may be formed at any time.

2. Each Compliance Group shall have a Compliance Group Leader.

3. To establish a Compliance Group, the Compliance Group Leader shall register as a Compliance Group Leader via SMARTS. The registration shall include documentation demonstrating compliance with the Compliance Group qualification requirements above and a list of the Compliance Group Participants.

4. Each Compliance Group Participant shall register as a member of an established Compliance Group via SMARTS.

5. The Executive Director of the State Water Board may review Compliance Group registrations and/or activities for compliance with the requirements of this General Permit. The Executive Director may reject the Compliance Group, the Compliance Group Leader, or individual Compliance Group Participants within the Compliance Group.

DRAFT

B. Compliance Group Leader Responsibilities

1. A Compliance Group Leader must ~~be a QISP.~~complete a State Water Board sponsored or approved training program for Compliance Group Leaders.

2. The Compliance Group Leader shall assist Compliance Group Participants with all compliance activities required by this General Permit.

3. A Compliance Group Leader shall prepare a Consolidated Level 1 ERA Report for all Compliance Group Participants with Level 1 status for the same parameter. Compliance Group Participants who certify and submit these Consolidated Level 1 ERA Reports are subject to the same provisions as individual Dischargers with Level 1 status, as described in Section XII.C. A Consolidated Level 1 ERA Report is equivalent to a Level 1 ERA Report.

4. The Compliance Group Leader shall update the Consolidated Level 1 ERA Report as needed to address additional Compliance Group Participants with ERA Level 1 status.

5. A Compliance Group Leader shall prepare a Level 2 ERA Action Plan specific to each Compliance Group Participant with Level 2 status. Compliance Group Participants who certify and submit these Level 2 ERA Action Plans are subject to the same provisions as individual Dischargers with Level 2 status, as described in Section XII.D.

6. A Compliance Group Leader shall prepare a Level 2 ERA Technical Report specific to each Compliance Group Participant with Level 2 status. Compliance Group Participants who certify and submit these Level 2 ERA Technical Reports are subject to the same provisions as individual Dischargers with Level 2 status, as described in Section XII.D.

7. The Compliance Group Leader shall inspect all the facilities of the Compliance Group Participants that have entered Level 2 status prior to preparing the individual Level 2 ERA Technical Report.

8. The Compliance Group Leader shall revise the Consolidated Level 1 ERA Report, individual Level 2 ERA Action Plans, or individual Level 2 Technical Reports in accordance with any comments received from the Water Boards.

9. The Compliance Group Leader shall inspect all the facilities of the Compliance Group Participants at a minimum of once per reporting year (July 1 to June 30).

C. Compliance Group Participant Responsibilities

1. Each Compliance Group Participant is responsible for permit compliance for the Compliance Group Participant's facility and for ensuring that the Compliance Group Leader's activities related to the Compliance Group Participant's facility comply with this General Permit.

2. Compliance Group Participants with Level 1 status shall certify and submit via SMARTS the Consolidated Level 1 ERA Report. The Compliance Group Participants shall certify that they have reviewed the Consolidated Level 1 ERA Report and have implemented any required additional BMPs. Alternatively, the Compliance Group Participant may submit an individual Level 1 ERA Report in accordance with the provisions in Section XII.C.2.

3. Compliance Group Participants with Level 2 status shall certify and submit via SMARTS their individual Level 2 ERA Action Plan and Technical Report prepared by their Compliance Group Leader. ~~The~~Each Compliance Group Participant shall certify that they have reviewed the Level 2 ERA Action Plan and Technical Report and will implement any required additional BMPs.

4. Compliance Group Participants can at any time discontinue their participation in their associated Compliance Group via SMARTS. Upon discontinuation, the former Compliance Group Participant is immediately subject to the sampling and analysis requirements described in Section XI.B.2.

XV. ANNUAL COMPREHENSIVE FACILITY COMPLIANCE EVALUATION (ANNUAL EVALUATION)

The Discharger shall conduct one Annual Evaluation for each reporting year (July 1 to June 30). If the Discharger conducts an Annual Evaluation fewer than eight (8) months, or more than sixteen (16) months, after it conducts the previous Annual Evaluation, it shall document the ~~reasons~~justification for doing so. The Discharger shall revise the SWPPP, as appropriate, and implement the revisions within 90 days of the Annual Evaluation. At a minimum, Annual Evaluations shall consist of:

A. A review of all sampling, visual observation, and inspection ~~and monitoring~~ records ~~and sampling and analysis results~~ conducted during the previous reporting year;

B. An ~~visual~~ inspection of all areas of industrial activity and associated potential pollutant sources for evidence of, or the potential for, pollutants entering the storm water conveyance system;

C. An ~~visual~~ inspection of all drainage areas previously identified as having no exposure to industrial activities and materials in accordance with the definitions in Section XVII;

D. An ~~visual~~ inspection of equipment needed to implement the BMPs;

E. An ~~visual~~ inspection of any BMPs;

F. A review and effectiveness assessment of all BMPs for each area of industrial activity and associated potential pollutant sources to determine if the BMPs are

properly designed, implemented, and are effective in reducing and preventing pollutants in industrial storm water discharges and authorized NSWDs; and,

G. An assessment of any other factors needed to comply with the requirements in Section XVI.B.

XVI. ANNUAL REPORT

A. The Discharger shall certify and submit via SMARTS an Annual Report no later than July 15th ~~of~~ following each reporting year using the standardized format and checklists in SMARTS.

B. The Discharger shall include in the Annual Report:

1. A Compliance Checklist that indicates whether a Discharger complies with, and has addressed all applicable requirements of this General Permit;

2. An explanation for any non-compliance of requirements within the reporting year, as indicated in the Compliance Checklist;

3. An identification, including page numbers and/or sections, of all revisions made to the SWPPP within the reporting year; and,

4. The date(s) of the Annual Evaluation.

XVII. CONDITIONAL EXCLUSION - NO EXPOSURE CERTIFICATION (NEC)

A. Discharges composed entirely of storm water ~~which have~~that has not been exposed to industrial activity are not industrial storm water discharges. Dischargers are conditionally excluded from complying with the SWPPP and monitoring requirements of this General Permit if all of the following conditions are met:

1. There is no exposure of Industrial Materials and Activities to rain, snow, snowmelt, and/or runoff;

2. All unauthorized NSWDs have been eliminated and all authorized NSWDs meet the conditions of Section IV;

3. The Discharger has certified and submitted via SMARTS PRDs for NEC coverage pursuant to the instructions in Section II.B.2 ~~and guidance in Attachment D~~; and,

4. The Discharger has satisfied all other requirements of this Section ~~and Appendix 2~~.

B. NEC Specific Definitions

1. No Exposure - all Industrial Materials and Activities are protected by a Storm-Resistant Shelter to prevent all exposure to rain, snow, snowmelt, and/or runoff.

DRAFT

2. Industrial Materials and Activities - includes, but is not limited to, industrial material handling activities or equipment, ~~industrial~~ machinery, raw materials, intermediate products, by-products, final products, and waste products.

3. Material Handling Activities - includes the storage, loading and unloading, transportation, or conveyance of any industrial raw material, intermediate product, final product, or waste product.

4. Sealed - banded or otherwise secured, and without operational taps or valves.

5. Storm-Resistant Shelters - includes completely roofed and walled buildings or structures. Also includes structures with only a top cover supported by permanent supports but with no side coverings, provided material within the structure is not subject to wind dispersion (sawdust, powders, etc.), or track-out, and there is no storm water discharged from within the structure that comes into contact with any materials.

C. NEC Qualifications

To qualify for an NEC, a Discharger shall:

1. Except as provided in subsection D below, provide a Storm-Resistant Shelter to protect Industrial Materials and Activities from exposure to rain, snow, snowmelt, run-on, and runoff;

2. Inspect and evaluate the facility annually to determine that storm water exposed to industrial materials or equipment has not and will not be discharged to waters of the United States. Evaluation records shall be maintained for five (5) years in accordance with Section XXI.J.4;

3. Register for NEC coverage by certifying that there are no discharges of storm water contaminated by exposure to Industrial Materials and Activities from areas of the facility subject to this General Permit, and certify that all unauthorized NSWDs have been eliminated and all authorized NSWDs meet the conditions of Section IV (Authorized NSWDs). NEC coverage and annual renewal requires payment of an annual fee in accordance with California Code of Regulations, title 23, section 2200 et seq.; and,

4. Submit PRDs for NEC coverage shall be prepared and submitted in accordance with the:

   a. Certification requirements in Section XXI.K;~~,~~ and,

   b. Submittal schedule in accordance with Section II.B.2~~, and~~.

   ~~c. Instructions and guidance provided in Appendix 2.~~

D. NEC Industrial Materials and Activities - Storm-Resistant Shelter Not Required

To qualify for NEC coverage, a Storm-Resistant Shelter is not required for the following:

1. Drums, barrels, tanks, and similar containers that are tightly Sealed, provided those containers are not deteriorated, do not contain residual industrial materials on the outside surfaces, and do not leak;

2. Adequately maintained vehicles used in material handling;

3. Final products, other than products that would be mobilized in storm water discharge (e.g., rock salt);

4. Any Industrial Materials and Activities that are protected by a temporary shelter for a period of no more than ninety (90) days due to facility construction or remodeling; and,

5. Any Industrial Materials and Activities that are protected within a secondary containment structure that will not discharge storm water to waters of the United States.

E. NEC Limitations

1. NEC coverage is available on a facility-wide basis only, not for individual outfalls. If a facility has industrial storm water discharges from one or more drainage areas that require NOI coverage, Dischargers shall register for NOI coverage for the entire facility through SMARTS in accordance with Section II.B.2. Any drainage areas on that facility that would otherwise qualify for NEC coverage may be specially addressed in the facility SWPPP by including an NEC Checklist and a certification statement demonstrating that those drainage areas of the facility have been evaluated; and that none of the Industrial Materials or Activities listed in subsection C above are, or will be in the foreseeable future, exposed to precipitation.

2. If circumstances change and Industrial Materials and Activities become exposed to rain, snow, snowmelt, and/or runoff, the conditions for this exclusion shall no longer apply. In such cases, the Discharger may be subject to enforcement for discharging without a permit. A Discharger with NEC coverage that anticipates changes in circumstances should register for NOI coverage at least seven (7) days before anticipated exposure.

3. The Regional Water Board may deny NEC coverage and require NOI coverage upon determining that:

   a. Storm water is exposed to Industrial Materials and Activities; and/or

   b. The discharge has a reasonable potential to cause or contribute to an exceedance of an applicable water quality standards~~WQS~~.

F. NEC Permit Registration Documents Required for Initial NEC Coverage

A Discharger shall submit via SMARTS the following PRDs for NEC coverage to document the applicability of the conditional exclusion:

1. The NEC form, which includes:

   a. The legal name, postal address, telephone number, and e-mail address of the Discharger;

   b. The facility business name and physical mailing address, the county name, and a description of the facility location if the facility does not have a physical mailing address; and,

   c. Certification by the Discharger that all PRDs submitted are correct and true and ~~that~~ the conditions of no exposure have been met.

2. An NEC Checklist prepared by the Discharger demonstrating that the facility has been evaluated; and that none of the following industrial materials or activities are, or will be in the foreseeable future, exposed to precipitation:

   a. Using, storing or cleaning industrial machinery or equipment, and areas where residuals from using, storing or cleaning industrial machinery or equipment remain and are exposed;

   b. Materials or residuals on the ground or in storm water inlets from spills/leaks;

   c. Materials or products from past industrial activity;

   d. Material handling equipment (except adequately maintained vehicles);

   e. Materials or products during loading/unloading or transporting activities;

   f. Materials or products stored outdoors (except final products intended for outside use, e.g., new cars, where exposure to storm water does not result in the discharge of pollutants);

   g. Materials contained in open, deteriorated or leaking storage drums, barrels, tanks, and similar containers;

   h. Materials or products handled/stored on roads or railways owned or maintained by the Discharger;

   i. Waste material (except waste in covered, non-leaking containers, e.g., dumpsters);

   j. Application or disposal of processed wastewater (unless already covered by an NPDES permit); and,

k. Particulate matter or visible deposits of residuals from roof stacks/vents evident in the storm water outflow.

3. Site Map (see Section X.E).

G. Requirements for Annual NEC Coverage Recertification

By ~~July~~October 1 of each reporting year beginning in 2015, any Discharger who has previously registered for NEC coverage shall either submit and certify an NEC demonstrating that the facility has been evaluated, and that none of the Industrial Materials or Activities listed above are, or will be in the foreseeable future, exposed to precipitation, or apply for NOI coverage.

H. NEC Certification Statement

All NEC certifications and re-certifications shall include the following certification statement:

I certify under penalty of law that I have read and understand the eligibility requirements for claiming a condition of 'no exposure' and obtaining an exclusion from NPDES storm water permitting; and that there are no discharges of storm water contaminated by exposure to industrial activities or materials from the industrial facility identified in this document (except as allowed in subsection C above). I understand that I am obligated to submit a no exposure certification form annually to the State Water Board and, if requested, to the operator of the local Municipal Separate Storm Sewer System (MS4) into which this facility discharges (where applicable). I understand that I must allow the Water Board staff, or MS4 operator where the discharge is into the local MS4, to perform inspections to confirm the condition of no exposure and to make such inspection reports publicly available upon request. I understand that I must obtain coverage under an NPDES permit prior to any point source discharge of storm water from the facility. I certify under penalty of law that this document and all attachments were prepared under my direction or supervision in accordance with a system designed to assure that qualified personnel properly gathered and evaluated the information submitted. Based upon my inquiry of the person or persons who manage the system, or those persons directly involved in gathering the information, the information submitted is to the best of my knowledge and belief true, accurate and complete. I am aware there are significant penalties for submitting false information, including the possibility of fine and imprisonment for knowing violations.

XVIII. SPECIAL REQUIREMENTS - PLASTIC MATERIALS

A. Facilities covered under this General Permit that handle Plastic Materials are required to implement BMPs to eliminate discharges of plastic in storm water in addition to the other requirements of this General Permit that are applicable to all other Industrial Materials and Activities. Plastic Materials~~, including~~ are virgin and recycled plastic resin pellets, powders, flakes, powdered additives,

regrind, ~~scrap,~~ dust, and ~~industrial process waste or recycling~~other similar types of preproduction plastics with the potential to discharge or migrate off-site ~~are considered storm water gross pollutants.~~. Any Discharger~~s~~' facility handling ~~these types of P~~plastic~~s~~ Materials will be referred to as Plastics Facilities in this General Permit. Any Plastics Facility covered under this General Permit that manufactures, transports, stores, or consumes these materials shall submit information to the State Water Board in their PRDs, including the type and form of plastics, and which BMPs are implemented at the facility to prevent illicit discharges. Pursuant to Water Code section 13367, Plastics Facilities are subject to mandatory, minimum BMPs.

1. At a minimum, Plastics Facilities shall implement and include in the SWPPP:

   a. Containment systems at each on-site storm drain discharge location down gradient of areas containing plastic material. The containment system shall be designed to trap all particles retained by a 1mm mesh screen, with a treatment capacity of no less than the peak flow rate from a one-year, one-hour storm.

   b. When a containment system is infeasible, or poses the potential to cause an illicit discharge, the facility may propose a technically feasible alternative BMP or suite of BMPs. The alternative BMPs shall be designed to achieve the same or better performance standard as a 1mm mesh screen with a treatment capacity of the peak flow rate from a one-year, one-hour storm. Alternative BMPs shall be submitted to the Regional Water Board for approval.

   ~~c.~~ Plastics Facilities shall use durable~~,~~ sealed containers designed not to rupture under typical loading and unloading activities at all points of plastic transfer and storage.

   ~~d. Plastics Facilities shall use durable, sealed containers designed not to rupture under typical loading and unloading activities at all points of plastic storage.~~

   c.

   ~~e.~~d. Plastics Facilities shall use capture devices as a form of secondary containment during transfers, loading, or unloading Plastic Materials. Examples of capture devices for secondary containment include, but are not limited to~~,~~ catch pans, tarps, berms or any other device that collects errant material.

   ~~f.~~e. Plastics Facilities shall have a vacuum or vacuum-type system for quick cleanup of fugitive plastic material available for employees.

   ~~g.~~f. Pursuant to Water Code section 13367(e)(1), Plastics Facilities that handle Plastic Materials smaller than 1mm in size shall develop a containment system designed to trap the smallest plastic material

handled at the facility with a treatment capacity of at least the peak flow rate from a one-year, one-hour storm, or develop a feasible alternative BMP or suite of BMPs that are designed to achieve a similar or better performance standard that shall be submitted to the Regional Water Board for approval.

2. Plastics Facilities are exempt from the Water Code requirement to install a containment system under section 13367 of the Water Code if they meet one of the following requirements that are determined to be equal to, or exceed the performance requirements of a containment system:

   a. The Discharger has certified and submitted via SMARTS a valid No Exposure Certification (NEC) in accordance with Section XVII; or

   b. Plastics Facilities are exempt from installing a containment system, if the following suite of eight (8) BMPs is implemented. This combination of BMPs is considered to reduce or prevent ~~or reduce~~ the discharge of plastics at a performance level equivalent to or better than the 1mm mesh and flow standard in Water Code section 13367(e)(1).

      i. Plastics Facilities shall annually train employees handling Plastic Materials. Training shall include environmental hazards of plastic discharges, employee responsibility for corrective actions to prevent errant Plastic Materials, and standard procedures for containing, cleaning, and disposing of errant Plastic Materials.

      ii. Plastics Facilities shall immediately fix any Plastic Materials containers that are punctured or leaking and shall clean up any errant material in a timely manner.

      iii. Plastics Facilities shall manage outdoor waste disposal of Plastic Materials in a manner that prevents the materials from leaking from waste disposal containers or during waste hauling.

      iv. Plastics Facilities that operate outdoor conveyance systems for Plastic Materials shall maintain the system in good operating condition. The system shall be sealed or filtered in such a way as to prevent the escape of materials when in operation. When not in operation, all connection points shall be sealed, capped, or filtered so as to not allow material to escape. Employees operating the conveyance system shall be trained how to operate in a manner that prevents the loss of materials such as secondary containment, immediate spill response, and checks to ensure the system is empty during connection changes.

      v. Plastics Facilities that maintain outdoor storage of Plastic Materials shall do so in a durable, permanent structure that prevents exposure to weather that could cause the material to migrate or discharge in storm water.

vi. Plastics Facilities shall maintain a schedule for regular housekeeping and routine inspection for errant Plastic Materials. The Plastics Facility shall ensure that their employees follow the schedule.

vii. PRDs shall include the housekeeping and routine inspection schedule, spill response and prevention procedures, and employee training materials regarding plastic material handling.

viii. Plastics Facilities shall correct any deficiencies in the employment of the above BMPs that result in errant Plastic Materials that may discharge or migrate off-site in a timely manner. Any Plastic Materials that are discharged or that migrate off-site constitute an illicit discharge in violation of this General Permit.

XIX. REGIONAL WATER BOARD AUTHORITIES

A. The Regional Water Boards may review a Discharger's PRDs for NOI or NEC coverage and administratively reject General Permit coverage if the PRDs are deemed incomplete. The Regional Water Boards may take actions that include rescinding General Permit coverage, requiring a Discharger to revise and re-submit their PRDs (certified and submitted by the Discharger) within a specified time period, requiring the Discharger to apply for different General Permit coverage or a different individual or general permit, or taking no action.

B. The Regional Water Boards have the authority to enforce the provisions and requirements of this General Permit. This includes, but is not limited to, reviewing SWPPPs, Monitoring Implementation Plan~~MIP~~s, ERA Reports, and Annual Reports, conducting compliance inspections, and taking enforcement actions.

C. As appropriate, the Regional Water Boards may issue NPDES storm water general or individual permits to a Discharger, categories of Dischargers, or Dischargers within a watershed or geographic area. Upon issuance of such NPDES permits, this General Permit shall no longer regulate the affected Discharger(s).

D. The Regional Water Boards may require a Discharger to revise its SWPPP, ERA Reports, or monitoring programs to achieve compliance with this General Permit. In this case, the Discharger shall implement these revisions in accordance with a schedule provided by the Regional Water Board.

E. The Regional Water Boards may approve requests from a Discharger to include co-located, but discontiguous, industrial activities within the same facility under a single NOI or NEC coverage.

F. Consistent with 40 Code of Federal Regulations section 122.26(a)(9)(i)(D), the Regional Water Boards may require any discharge that is not regulated by this General Permit, that is determined to contributes to a violation of a water quality standard~~WQS~~ or is a significant contributor of pollutants to waters of the United States, to be covered under this General Permit ~~is~~as appropriate. Upon

designation, the Discharger responsible for the discharge shall obtain coverage under this General Permit.

G. The Regional Water Boards may review a Discharger's Inactive Mining Operation Certification and reject it at any time if the Regional Water Board determines that access to the facility for monitoring purposes is practicable or that the facility is not in compliance with the applicable requirements of this General Permit.

H. All Regional Water Board actions that modify a Discharger's obligations under this General Permit must be in writing and should also be submitted in SMARTS.

XX. SPECIAL CONDITIONS

A. Reopener Clause

This General Permit may be reopened and amended to incorporate TMDL-related provisions. This General Permit may also be modified, revoked and reissued, or terminated for cause due to promulgation of amended regulations, water quality control plans or water quality control policies, receipt of U.S. EPA guidance concerning regulated activities, judicial decision, or in accordance with 40 Code of Federal Regulations sections 122.62, 122.63, 122.64, and 124.5.

B. Water Quality Based Corrective Actions

1. Upon determination by the Discharger or written notification by the Regional Water Board that industrial storm water discharges and/or authorized NSWDs contain pollutants that are in violation of Receiving Water Limitations (Section VI), the Discharger shall:

   a. Conduct a facility evaluation to identify pollutant source(s) within the facility that are associated with industrial activity and whether the BMPs described in the SWPPP have been properly implemented;

   b. Assess the facility's SWPPP and its implementation to determine whether additional BMPs or SWPPP implementation measures are necessary to reduce or prevent ~~or reduce~~ pollutants in industrial storm water discharges to meet the Receiving Water Limitations (Section VI); and,

   c. Certify and submit via SMARTS documentation based upon the above facility evaluation and assessment that:

      i. Additional BMPs and/or SWPPP implementation measures have been identified and included in the SWPPP to meet the Receiving Water Limitations (Section VI); or

ii. No additional BMPs or SWPPP implementation measures are required to reduce or prevent pollutants in industrial storm water discharges to meet the Receiving Water Limitations (Section VI).

2. The Regional Water Board may reject the Dischargers water quality based corrective actions and/or request additional supporting documentation.

C. Requirements for Dischargers Claiming "No Discharge" through the Notice of Non-Applicability (NONA)

1. For the purpose of the NONA, the Entity (Entities) is referring to the person(s) defined in section 13399.30 of the Water Code.

2. Entities who are claiming "No Discharge" through the NONA shall meet the following eligibility requirements:

   a. The facility ~~shall~~ is ~~either be (1)~~ engineered and constructed to have contained the maximum historic precipitation event (or series of events) using the precipitation data collected from the National Oceanic and Atmospheric Agency's website (or other nearby precipitation data available from other government agencies)~~; or~~ so that there will be no discharge of industrial storm water to waters of the United States, including no discharge to groundwater that has a direct hydrologic connection to waters of the United States; or,

   b. The facility is ~~L~~located in basins or other physical locations that are not hydrologically connected to waters of the United States.

3. When claiming the "No Discharge" option, Entities shall submit and certify via SMARTS both the NONA and a No Discharge Technical Report. The No Discharge Technical Report shall demonstrate the facility meets the eligibility requirements described above.

4. The No Discharge Technical Report shall be ~~prepared~~ signed (wet signature and license number) by a California licensed professional engineer.

XXI. STANDARD CONDITIONS

A. Duty to Comply

Dischargers shall comply with all standard conditions in this General Permit. Permit noncompliance constitutes a violation of the Clean Water Act and the Water Code and is grounds for enforcement action and/or removal from General Permit coverage.

Dischargers shall comply with effluent standards or prohibitions established under section 307(a) of the Clean Water Act for toxic pollutants within the time provided in the regulations that establish these standards or prohibitions.

B. Duty to Reapply

Dischargers that wish to continue an activity regulated under this General Permit after the expiration date of this General Permit shall apply for and obtain authorization from the Water Boards as required by the new general permit once it is issued.

C. General Permit Actions

1. This General Permit may be modified, revoked and reissued, or terminated for cause. Submittal of a request by the Discharger for General Permit modification, revocation and reissuance, or termination, or a notification of planned changes or anticipated noncompliance does not annul any General Permit condition.

2. If a toxic effluent standard or prohibition (including any schedule of compliance specified in such effluent standard or prohibition) is promulgated under section 307(a) of the Clean Water Act for a toxic pollutant which is present in the discharge, and that standard or prohibition is more stringent than any limitation on the pollutant in this General Permit, this General Permit shall be modified or revoked and reissued to conform to the toxic effluent standard or prohibition.

D. Need to Halt or Reduce Activity Not a Defense

In an enforcement action, it shall not be a defense for a Discharger that it would have been necessary to halt or reduce the permitted activity in order to maintain compliance with the conditions of this General Permit.

E. Duty to Mitigate

Dischargers shall take all responsible steps to ~~minimize~~reduce or prevent any discharge ~~which~~that has a reasonable likelihood of adversely affecting human health or the environment.

F. Proper Operation and Maintenance

Dischargers shall at all times properly operate and maintain any facilities and systems of treatment and control (and related equipment and apparatuses) which are installed or used by the Discharger to achieve compliance with the conditions of this General Permit. Proper operation and maintenance also include adequate laboratory controls and appropriate quality assurance procedures. Proper operation and maintenance may require the operation of backup or auxiliary facilities or similar systems installed by a Discharger when necessary to achieve compliance with the conditions of this General Permit.

G. Property Rights

This General Permit does not convey any property rights of any sort or any exclusive privileges. It also does not authorize any injury to private property or

any invasion of personal rights, nor does it authorize any infringement of federal, state, or local laws and regulations.

H. Duty to Provide Information

Upon request by the relevant agency, Dischargers shall provide information to determine compliance with this General Permit to the Water Boards, U.S. EPA, or local Municipal Separate Storm Sewer System (MS4) within a reasonable time. Dischargers shall also furnish, upon request by the relevant agency, copies of records that are required to be kept by this General Permit.

I. Inspection and Entry

Dischargers shall allow the Water Boards, U.S. EPA, and local MS4 (including any authorized contractor acting as their representative), to:

1. Enter upon the premises at reasonable times where a regulated industrial activity is being conducted or where records are kept under the conditions of this General Permit;

2. Access and copy at reasonable times any records that must be kept under the conditions of this General Permit;

3. Inspect the facility at reasonable times; and,

4. Sample or monitor at reasonable times for the purpose of ensuring General Permit compliance.

J. Monitoring and Records

1. Samples and measurements taken for the purpose of monitoring shall be representative of the monitored activity.

2. If Dischargers monitor any pollutant more frequently than required, the results of such monitoring shall be included in the calculation and reporting of the data submitted.

3. Records of monitoring information shall include:

   a. The date, exact location, and time of sampling or measurement;

   b. The date(s) analyses were performed;

   c. The individual(s) that performed the analyses;

   d. The analytical techniques or methods used; and,

   e. The results of such analyses.

4. Dischargers shall retain, for a period of at least five (5) years, either a paper or electronic copy of all storm water monitoring information, records, data,

and reports required by this General Permit. Copies shall be available for review by the Water Board's staff at the facility during scheduled facility operating hours.

5. Upon written request by U.S. EPA or the local MS4, Dischargers shall provide paper or electronic copies of Annual Reports or other requested records to the Water Boards, U.S. EPA, or local MS4 within ten (10) ~~working~~ days from receipt of the request.

K. Electronic Signature and Certification Requirements

1. All Permit Registration Documents (PRDs) for NOI and NEC coverage shall be certified and submitted via SMARTS by the Discharger's Legally Responsible Person (LRP). All other documents may be certified and submitted via SMARTS by the LRP or by their designated Duly Authorized Representative.

2. When a new LRP or Duly Authorized Representative is designated, the Discharger shall ensure that the appropriate revisions are made via SMARTS. In unexpected or emergency situations, it may be necessary for the Discharger to directly contact the State Water Board's Storm Water Section to register for SMARTS account access in order to designate a new LRP.

3. Documents certified and submitted via SMARTS by an unauthorized or ineligible LRP or Duly Authorized Representative are invalid.

4. LRP eligibility is as follows:

   a. For a corporation: by an authorized corporate officer. For the purposes of this section, an authorized corporate officer means: (a) a president, secretary, treasurer, vice-president, or other officer of the corporation with authority to execute documents on behalf of the corporation pursuant to corporate bylaws or board resolution; or (b) the manager of the facility, if authority to sign documents has been assigned or delegated to the manager in accordance with corporate bylaws and by corporate resolution;

   b. For a partnership or sole proprietorship: by a general partner or the proprietor, respectively, that is authorized to execute legally binding documents on behalf of the partnership or sole proprietorship (as the case may be) in accordance with the entity's governing documents; or,

   c. For a municipality, state, federal, or other public agency: by either a principal executive officer or ranking elected official that possesses signatory authority of the governmental agency at issue. The principal executive officer of a federal agency includes the chief executive officer of the agency or the senior executive officer having responsibility for the

overall operations of a principal geographic unit of the agency (e.g., Regional Administrators of U.S. EPA).

5. Duly Authorized Representative eligibility is as follows:

   a. The Discharger must authorize via SMARTS any person designated as a Duly Authorized Representative;

   b. The authorization shall specify that a person designated as a Duly Authorized Representative has responsibility for the overall operation of the regulated facility or activity, such as a person that is a manager, operator, superintendent, or another position of equivalent responsibility, or is an individual who has overall responsibility for environmental matters for the company; and,

   c. The authorization must be current (it has been updated to reflect a different individual or position) prior to any report submittals, certifications, or records certified by the Duly Authorized Representative.

L. Certification

Any person signing, certifying, and submitting documents under Section XXI.K above shall make the following certification:

I certify under penalty of law that this document and all attachments were prepared under my direction or supervision in accordance with a system designed to assure that qualified personnel properly gather and evaluate the information submitted. Based on my inquiry of the person or persons that manage the system or those persons directly responsible for gathering the information, to the best of my knowledge and belief, the information submitted is, true, accurate, and complete. I am aware that there are significant penalties for submitting false information, including the possibility of fine and imprisonment for knowing violations.

M. Anticipated Noncompliance

Dischargers shall give advance notice to the Regional Water Board and local MS4 of any planned changes in the industrial activity that may result in noncompliance with this General Permit.

N. Penalties for Falsification of Reports

Clean Water Act section 309(c)(4) provides that any person that knowingly makes any false material statement, representation, or certification in any record or other document submitted or required to be maintained under this General Permit, including reports of compliance or noncompliance shall upon conviction, be punished by a fine of not more than $10,000 or by imprisonment for not more than two years or by both.

DRAFT

O. Oil and Hazardous Substance Liability

Nothing in this General Permit shall be construed to preclude the initiation of any legal action or relieve the Discharger from any responsibilities, liabilities, or penalties to which the Discharger is or may be subject to under section 311 of the Clean Water Act.

P. Severability

The provisions of this General Permit are severable; if any provision of this General Permit or the application of any provision of this General Permit to any circumstance is held invalid, the application of such provision to other circumstances and the remainder of this General Permit shall not be affected thereby.

Q. Penalties for Violations of Permit Conditions

1. Clean Water Act section 309 provides significant penalties for any person that violates a permit condition implementing sections 301, 302, 306, 307, 308, 318, or 405 of the Clean Water Act or any permit condition or limitation implementing any such section in a permit issued under section 402. Any person that violates any permit condition of this General Permit is subject to a civil penalty not to exceed $37,500[25] per calendar day of such violation, as well as any other appropriate sanction provided by section 309 of the Clean Water Act.

2. The Porter-Cologne Water Quality Control Act also provides for civil and criminal penalties, which ~~in some cases~~ may be greater than ~~those~~penalties under the Clean Water Act.

R. Transfers

Coverage under this General Permit is non-transferrable. When operation of the facility has been transferred to another entity, or a facility is relocated, new PRDs for NOI and NEC coverage must be certified and submitted via SMARTS prior to the transfer, or at least seven (7) days prior to the first day of operations for a relocated facility.

S. Continuation of Expired General Permit

If this General Permit is not reissued or replaced prior to the expiration date, it will be administratively continued in accordance with 40 Code of Federal Regulations 122.6 and remain in full force and effect.

[25] May be further adjusted in accordance with the Federal Civil Penalties Inflation Adjustment Act.

NATIONAL POLLUTANT DISCHARGE ELIMINATION SYSTEM (NPDES)
GENERAL PERMIT FACT SHEET FOR
STORM WATER DISCHARGES
ASSOCIATED WITH INDUSTRIAL ACTIVITIES
NPDES NO. CAS000001

DRAFT

TABLE OF CONTENTS

I. BACKGROUND 1
A. Purpose 1
B. History 1
C. Blue Ribbon Panel of Experts (Panel) 2
D. Summary of Significant Changes in this General Permit 4
II. TECHNICAL RATIONALE FOR REQUIREMENTS IN THIS GENERAL PERMIT 9
A. Receiving General Permit Coverage 9
B. Discharge Prohibitions 14
C. Non-Storm Water Discharges (NSWDs) 14
D. Effluent Limitations 15
E. Receiving Water Limitations and Water Quality Standards 22
F. Total Maximum Daily Loads (TMDLs) 22
G. Discharges Subject to the California Ocean Plan 26
H. Training Qualifications 27
I. Storm Water Pollution Prevention Plan (SWPPP) 28
J. Monitoring and Reporting Requirements 41
K. Exceedance Response Actions (ERAs) 53
L. Inactive Mining Operations 64
M. Compliance Groups and Compliance Group Leaders 64
N. Annual Evaluation 66
O. Annual Report 66
P. Conditional Exclusion - No Exposure Certification (NEC) Requirements 66
Q. Special Requirements - Plastic Materials 67
R. Regional Water Board Authorities 68
S. Special Conditions: Requirements for Dischargers Claiming the “No Discharge” Option in the Notice of Non-Applicability 69

FIGURES

FIGURE 1: Example Waste Load Allocations Proposed Translation: Ballona Creek Estuary – Toxic Pollutants 23
FIGURE 2: Five Phases for Developing and Implementing an Industrial Storm Water Pollution Prevention Plan (SWPPP) 30
FIGURE 3: Compliance Determination Flowchart 43

TABLES

TABLE 1: Role-Specific Permit Requirements 28
TABLE 2: Example - Assessment of Potential Industrial Pollution Sources and Corresponding BMPs Summary 31

DRAFT

I. BACKGROUND

A. Purpose

The purpose of this Fact Sheet is to explain the legal requirements and technical rationale that serve as the basis for the requirements of this Order <Insert Order No.> (General Permit), adopted by the State Water Resources Control Board (State Water Board) on <Insert Date>. This General Permit regulates operators of facilities subject to storm water permitting (Dischargers), that discharge storm water associated with industrial activity (industrial storm water discharges). This General Permit replaces Water Quality Order 97-03-DWQ**.** This Fact Sheet does not contain any independently-enforceable requirements; the General Permit contains all of the actual requirements applicable to Dischargers. In case of any conflict between the Fact Sheet and the General Permit, the terms of the General Permit govern.

B. History

The Federal Clean Water Act (CWA)[1] prohibits discharges from point sources to waters of the United States, unless the discharges are in compliance with a National Pollutant Discharge Elimination System (NPDES) permit. (CWA § 301(a).) In 1987, the CWA was amended to establish a framework for regulating municipal storm water discharges and discharges of storm water associated with industrial activity (industrial storm water discharges) under the NPDES program. (CWA § 402(p).) In 1990, the United States Environmental Protection Agency (U.S. EPA) promulgated regulations, commonly known as Phase I, establishing application requirements for storm water permits for specified categories of industries. (40 C.F.R. § 122.26.) In 1992, U.S. EPA revised the monitoring requirements for industrial storm water discharges. (40 C.F.R. § 122.44(i)(2), (4), (5).) In 1999, U.S. EPA adopted additional storm water regulations, known as Phase II. (64 Fed. Reg. 68722.) The Phase II regulations provide for, among other things, a conditional exclusion from NPDES permitting requirements for industrial activities that have no exposure to storm water.

Industrial storm water discharges are regulated pursuant to CWA section 402(p)(3)(A). This provision requires NPDES permits for industrial storm water discharges to implement CWA section 301, which includes requirements for Dischargers to comply with technology-based effluent limitations, and any more stringent water quality-based limitations necessary to meet water quality standards. Technology-based effluent limitations applicable to industrial activities are based on best conventional pollutant control technology (BCT) for conventional pollutants, and best available technology economically achievable (BAT) for toxic and non-conventional pollutants. (CWA § 301(b)(1)(A) and (2)(A).) To ensure compliance with water quality standards, NPDES permits may also require a Discharger to implement best management practices (BMPs). 40 Code of Federal Regulations section 122.44(k)(4) requires the use of BMPs to control or abate the discharge of pollutants when numeric effluent limitations (NELs) are infeasible. The State Water Board has concluded that it is infeasible to establish

[1] Federal Water Pollution Control Act of 1970 (also referred to as the Clean Water Act or CWA), 33 U.S.C. § 1201 et seq. All further statutory references herein are to the CWA unless otherwise indicated.

NELs for storm water discharges associated with industrial activity due to insufficient information at the time of adoption of this General Permit.

On April 17, 1997, the State Water Board issued NPDES General Permit for Industrial Storm Water Discharges, Excluding Construction Activities, Water Quality Order 97-03-DWQ (previous permit). This General Permit, Order <Insert Order>, rescinds the previous permit and serves as the statewide general permit for industrial storm water discharges. The State Water Board concludes that significant revisions to the previous permit requirements are necessary for implementation, consistency and objective enforcement. As discussed in this Fact Sheet, this General Permit requires Dischargers to:

- Eliminate unauthorized non-storm water discharges (NSWDs);
- Develop and implement storm water pollution prevention plans (SWPPPs) that include best management practices (BMPs);
- Implement minimum BMPs, and advanced BMPs as necessary, to achieve compliance with the effluent and receiving water limitations of this General Permit;
- Conduct monitoring, including visual observations and analytical storm water monitoring for indicator parameters;
- Compare monitoring results for monitored parameters to applicable numeric action levels (NALs) derived from the U.S. EPA 2008 Multi-Sector General Permit for Storm Water Discharges Associated with Industrial Activity (2008 MSGP) and other industrial storm water discharge monitoring data collected in California;
- Perform the appropriate Exceedance Response Actions (ERAs) when there are exceedances of the NALs; and,
- Certify and submit all permit-related compliance documents via the Storm Water Multi Application Reporting and Tracking System (SMARTS). Dischargers shall certify and submit these documents which include, but are not limited to, Permit Registration Documents (PRDs) including Notices of Intent (NOIs), No Exposure Certifications (NECs), and Storm Water Pollution Prevention Plans (SWPPPs), as well as Annual Reports, Notices of Termination (NOTs), Level 1 ERA Reports, and Level 2 ERA Technical Reports.

C. Blue Ribbon Panel of Experts (Panel)

In 2005 and 2006, the State Water Board convened a Blue Ribbon Panel of Experts (Panel) to address the feasibility of NELs in California's storm water permits. Specifically, the Panel was charged with answering the following questions:

> Is it technically feasible to establish numeric effluent limitations, or some other quantifiable limit, for inclusion in storm water permits?

How would such limitations or criteria be established, and what information and data would be required? [2]

The Panel was directed to answer these questions for industrial storm water discharge general permits, construction storm water discharge general permits, and area-wide municipal storm water discharge permits. The Panel was also directed to address both technology-based and water quality based limitations and criteria.

In evaluating the establishment of numeric limitations and criteria, the Panel was directed to consider all of the following:

- The ability of the State Water Board to establish appropriate objective limitations or criteria;
- How compliance is to be determined;
- The ability of Dischargers and inspectors to monitor for compliance; and
- The technical and financial ability of Dischargers to comply with the limitations or criteria.

Following an opportunity for public comment, the Panel identified several water quality concerns, public process and program effectiveness issues. A summary of the Panel's recommendations regarding industrial storm water discharges follows:[3]

- Current data are inadequate; accordingly, the State Water Board should improve monitoring requirements to collect useful data for establishing NALs and NELs.
- Required parameters for further monitoring should be consistent with the type of industrial activity (i.e., monitor for heavy metals when there is a reasonable expectation that the industrial activity will contribute to increased heavy metals concentrations in storm water).
- Insofar as possible, the use of California data (or national data applicable to California) is preferred when setting NELs and NALs.
- Industrial facilities that do not discharge to Municipal Separate Storm Sewer Systems (MS4s) should implement BMPs for their non-industrial exposure (e.g., parking lots, roof runoff) similar to BMPs implemented by commercial facilities in MS4 jurisdictions.

[2] State Water Board Storm Water Panel of Experts, The Feasibility of Numeric Effluent Limits Applicable to Discharges of Storm Water Associated with Municipal, Industrial and Construction Activities (June 19, 2006). <http://www.waterboards.ca.gov/water_issues/programs/stormwater/docs/numeric/swpanel_final_report.pdf>. [as of February 4, 2014].

[3] See footnote 2.

- In all cases, Dischargers should implement a suite of minimum BMPs, including, but not limited to, good housekeeping practices, employee training, and preventing exposure of materials to rain.

- Standard Industrial Classification (SIC) code categories are not a satisfactory way of identifying industrial activities at any given site. The State Water Board should develop an improved method of characterizing industrial activities that will improve water quality in storm water.

- Recognizing that implementing the Panel's suggested changes is a large task, the State Water Board should set priorities for implementation of the Panel's suggested approach in order to achieve the greatest reduction of pollutants statewide.

- Recognizing that an increasing number of industries have moved industrial activities indoors to prevent storm water pollution, such facilities should be granted regulatory relief from NALs and/or NELs , but should still be required to comply with any applicable MS4 permit requirements.

- Recognizing the need for improved monitoring and reduction of pollutants in industrial storm water discharges, the State Water Board should consider the total economic impact of its requirements to not economically penalize California industries when compared to industries outside of California.

With regard to the industrial activities component of its charge, the Panel limited its focus to the question of whether sampling data can be used to derive technology-based NELs. The Panel did not address other factors or approaches that may relate to the task of determining technology- and water quality-based NELs consistent with the regulations and law. Examples of these other factors are discussed in more detail in this Fact Sheet. Additionally, in its final report the Panel did not clearly differentiate between the role of numeric and non-numeric effluent limitations, nor did it consider U.S. EPA procedures used to promulgate effluent limitation guidelines (ELGs) in 40 Code of Federal Regulations, Chapter I, Subchapter N (Subchapter N).

D. Summary of Significant Changes in this General Permit

The previous permit issued by the State Water Board on April 17, 1997, had been administratively extended since 2002 until the adoption of this General Permit. Significant revisions to the previous permit were necessary to update permit requirements consistent with recent regulatory changes pertaining to industrial storm water under the CWA. This General Permit differs from the previous permit in the following areas:

1. Minimum Best Management Practices (BMPs)

   This General Permit requires Dischargers to implement a set of minimum BMPs. Implementation of the minimum BMPs, in combination with any advanced BMPs (BMPs, collectively,) necessary to reduce or prevent pollutants in industrial storm water discharges, serve as the basis for compliance with this General Permit's

technology-based effluent limitations and water quality based receiving water limitations. Although there is great variation in industrial activities and pollutant sources between industrial sectors and, in some cases between operations within the same industrial sector, the minimum BMPs specified in this General Permit represent common practices that can be implemented by most facilities.

The previous permit did not require a minimum set of BMPs but rather allowed Dischargers to consider which non-structural BMPs should be implemented and which structural BMPs should be considered for implementation when non-structural BMPs are ineffective.

This General Permit requires Dischargers to implement minimum BMPs (which are mostly non-structural BMPs), and advanced BMPs (which are mostly structural BMPs) when implementation of the minimum BMPs do not meet the requirements of the General Permit. Advanced BMPs consists of treatment control BMPs, exposure reduction BMPs, and storm water containment and discharge reduction BMPs. BMPs that exceed the performance expectation of minimum BMPs are considered advanced BMPs. Dischargers are encouraged to utilize advanced BMPs that infiltrate or reuse storm water where feasible.

The minimum and advanced BMPs required in this General Permit are consistent with U.S. EPA's 2008 Multi-Sector General Permit for Stormwater Discharges Associated with Industrial Activity (2008 MSGP), guidance developed by the California Stormwater Quality Association, and recommendations by Regional Water Quality Control Board (Regional Water Board) inspectors. Dischargers are required to evaluate BMPs being implemented and determine an appropriate interval for the implementation and inspection of these BMPs.

2. Conditional Exclusion - No Exposure Certification (NEC)

   This General Permit applies U.S. EPA Phase II regulations regarding a conditional exclusion for facilities that have no exposure of industrial activities and materials to storm water. (40 C.F.R. § 122.26(g).) (The previous permit required light industries to obtain coverage only if their activities were exposed to storm water.) This General Permit implements current U.S. EPA rules allowing any type of industry to claim a conditional exclusion. The NEC requires enrollment for coverage prior to conditionally excluding a Discharger from a majority of this General Permit's requirements.

3. Electronic Reporting Requirements

   This General Permit requires Dischargers to submit and certify all reports electronically via SMARTS. The previous permit used a paper reporting process with electronic reporting as an option.

4. Training Expectations and Roles

   This General Permit requires that Dischargers arrange to have appropriately trained personnel implementing this General Permit's requirements at each facility. In

addition, if a Discharger's facility enters Level 1 status, the Level 1 ERA Report must be prepared by a Qualified Industrial Storm Water Practitioner (QISP). All Action Plans and Technical Reports required in Level 2 status must also be prepared by a QISP.

Dischargers may appoint a staff person to complete the QISP training or may contract with an outside QISP. QISP training is tailored to persons with a high degree of technical knowledge and environmental experience. Although QISPs do not need to be California licensed professional engineers, it may be necessary to involve a California licensed professional engineer to perform certain aspects of the Technical Reports.

5. Numeric Action Levels (NALs) and NAL Exceedances

   This General Permit contains two types of NAL exceedances. An annual NAL exceedance occurs when the average of all sampling results within a reporting year for a single parameter (except pH) exceeds the applicable annual NAL. The annual NALs are derived from, and function similarly to, the benchmark values provided in the 2008 MSGP. Instantaneous maximum NALs target hot spots or episodic discharges of pollutants. An instantaneous maximum NAL exceedance occurs when two or more analytical results from samples taken for any parameter within a reporting year exceed the applicable instantaneous maximum NAL value. Instantaneous maximum NALs for Total Suspended Solids (TSS) and Oil and Grease (O&G) are based on previously gathered California industrial storm water discharge monitoring data. The instantaneous maximum NAL for pH is derived from the benchmark value provided in the 2008 MSGP.

6. Exceedance Response Actions (ERA)

   This General Permit requires Dischargers to develop and implement ERAs, when an annual NAL or instantaneous maximum NAL exceedance occurs during a reporting year. The first time an annual NAL or instantaneous maximum NAL exceedance occurs for any one parameter, a Discharger's status is changed from Baseline to Level 1 status, and the Discharger is required to evaluate and revise, as necessary, its BMPs (with the assistance of a QISP) and submit a report prepared by a QISP. The second time an annual NAL or instantaneous maximum NAL exceedance occurs for the same parameter in a subsequent reporting year, the Discharger's status is changed from Level 1 to Level 2 status, and Dischargers are required to submit a Level 2 ERA Action Plan and a Level 2 ERA Technical Report. Unless the demonstration is not accepted by the State Water Board or a Regional Water Board, the Discharger is not required to perform additional ERA requirements for the parameter(s) involved if the Discharger demonstrates that:

   a. Additional BMPs required to eliminate NAL exceedances are not technologically available or economically practicable and achievable; or,

   b. NAL exceedances are solely caused by non-industrial pollutant sources; or,

c. NAL exceedances are solely attributable to pollutants from natural background sources.

Information supporting the above demonstrations must be included in QISP-prepared Level 2 ERA Technical Reports.

7. CWA section 303(d) Impairment

This General Permit requires a Discharger to monitor additional parameters if the discharge(s) from its facility contributes pollutants to receiving waters that are listed as impaired for those pollutants (CWA section 303(d) listings). This General Permit lists the receiving waters that are 303(d) listed as impaired for pollutants that are likely to be associated with industrial storm water in Appendix 3. For example, if a Discharger discharges to a water body that is listed as impaired for copper, and the discharge(s) from its facility has the potential sources of copper, the Discharger must add copper to the list of parameters to monitor in its storm water discharge.

8. Design Storm Standards for Treatment Control BMPs

This General Permit includes design storm standards for Dischargers implementing treatment control BMPs. The design storm standards include both volume- and flow-based criteria. Dischargers are not required to retrofit existing treatment control BMPs unless required to meet the technology-based effluent limitations and receiving water limitations in this General Permit.

9. Qualifying Storm Event (QSE)

This General Permit defines a QSE as a precipitation event that:

a. Produces a discharge for at least one drainage area; and,

b. Is preceded by 48 hours with no discharge from any drainage area.

The definition above differs from the definition in the previous permit, resulting in an increase number of QSEs eligible for sample collection. Therefore, most Dischargers will be able to collect the required number of samples, regardless of their facility location.

10. Sampling Protocols

This General Permit requires Dischargers to collect samples during scheduled facility operating hours from each drainage location within four hours of: (1) the start of the discharge from a QSE occurring during scheduled facility operating hours, or (2) the start of scheduled facility operating hours if the QSE occurred in the previous twelve (12) hours. The benefits of this sampling protocol: (a) allows a more reasonable amount of time to collect samples, (b) increases the likelihood for samples collected at discharge locations to be representative of the drainage area discharge characteristics, (c) increases the number of QSEs eligible for sample collection, and, (d) reduces the likelihood of Dischargers collecting samples with short-term concentration spikes.

The previous permit required that Dischargers collect grab samples during the first hour of discharge that commenced during scheduled facility operating hours. These sample collection requirements were widely considered to be too rigid and out of step with other states' sample collection requirements. Since many storm events begin in the evening or early morning hours, numerous opportunities to collect samples were lost because Dischargers could not obtain samples during the first hour of discharge. Dischargers with facilities that have multiple discharge locations had difficulties collecting samples within such a short timeframe therefore affecting data quality.

11. Sampling Frequency

This General Permit increases the sampling frequency by requiring the Discharger to collect and analyze storm water samples from each discharge location for two (2) QSEs within the first half of each reporting year (July 1 to December 31), and two (2) QSEs within the second half of each reporting year (January 1 to June 30). The increased sampling, compared to the previous permit's two samples during the wet season, is consistent with the 2008 MSGP and other states' permit requirements and will improve compliance determination with this General Permit. The State Water Board expects that the elimination of the wet season sampling requirements will increase the number of possible QSEs eligible for monitoring.

12. Compliance Groups

To allow industrial facilities to efficiently share knowledge, skills and resources towards achieving General Permit compliance, this General Permit allows the formation of Compliance Groups and Compliance Group Leaders . Dischargers participating in a Compliance Group (Compliance Group Participants) are collectively required to sample twice a year. Compliance Group Leaders are required to be approved through the State Water Board-approved training program process, inspect each facility once within each reporting year, and prepare Level 1 and Level 2 ERA reports as necessary. The Compliance Group option is described in more detail in General Permit section XIV and in this Fact Sheet in the Section titled "Compliance Groups."

13. Discharges to Ocean Waters

This General Permit requires Dischargers with ocean-discharging outfalls subject to model monitoring provisions of the California Ocean Plan to develop and implement a monitoring plan in compliance with those provisions and any additional monitoring requirements established pursuant to Water Code section 13383. Dischargers who have not developed and implemented a monitoring program in compliance with the California Ocean Plan model monitoring provisions by January 1, 2015 or seven (7) days prior to commencing operations, whichever is later, are ineligible to obtain coverage under this General Permit.

DRAFT

II. TECHNICAL RATIONALE FOR REQUIREMENTS IN THIS GENERAL PERMIT

A. Receiving General Permit Coverage

1. This General Permit provides regulatory coverage for new and existing industrial storm water discharges and authorized NSWDs from:

   a. Facilities required by federal regulations to obtain an NPDES permit;

   b. Facilities designated by the Regional Water Boards to obtain an NPDES permit; and,

   c. Facilities directed by the Regional Water Boards to obtain coverage specifically under this General Permit. The Regional Water Board typically directs a Discharger to change General Permit coverage under two circumstances:

      (1) switch from an individual NPDES permit to this General Permit, or

      (2) switch from the NPDES General Permit for Storm Water Discharges Associated with Construction And Land Disturbance Activities, (Order 2009-0009-DWQ, NPDES No CAS000002 (to this General Permit for long-term construction related activities that are similar to industrial activities (e.g. concrete batch plants).

40 Code of Federal Regulations section 122.26(b)(14) defines "storm water discharge associated with industrial activity" and describes the types of facilities subject to permitting (primarily by Standard Industrial Classification (SIC) code). This General Permit provides regulatory coverage for all facilities with industrial activities described in Attachment A where the covered industrial activity is the Discharger's primary industrial activity. In some instances, a Discharger may have more than one primary industrial activity occurring at a facility.

The 1987 SIC manual uses the term "establishment" to determine the primary economic activity of a facility. The manual instructs that where distinct and separate economic activities are performed at a single location, each activity should be treated as a separate establishment (and, therefore, separate primary activity). For example, the United States Navy (primary SIC code 9711) may conduct industrial activities subject to permitting under this General Permit, such as landfill operations (SIC code 4953), ship and boat building and repair (SIC code 3731, and flying field operations (SIC code 4581).

The SIC manual also discusses "auxiliary" functions of establishments. Auxiliary functions provide management or support services to the establishment. Examples of auxiliary functions are warehouses and storage facilities for the establishment's own materials, maintenance and repair shops of the establishment's own machinery, automotive repair shops or storage garages of the establishment's own vehicles, administrative offices, research, development, field engineering support, and testing conducted for the establishment. When auxiliary functions are performed at physically separate facilities from the establishment they serve, they generally are not subject to General Permit coverage. If

auxiliary functions are performed at the same physical location as the establishment, then they are subject to General Permit coverage if they are associated with industrial activities.

This clarification does not change the scope of which facilities are subject to permitting relative to the 1997 IGP. The 1997 IGP Fact Sheet had used the term "auxiliary" to describe a facility's separate primary activities, which has caused confusion.

In 1997, the North American Industrial Classification System (NAICS) was published, replacing the SIC code system. The U.S. EPA has indicated that it intends to incorporate the NAICS codes into the federal storm water regulations but has not done so yet. The State Water Board recognizes that many Dischargers in newer industries were not included in the 1987 SIC code manual and may have difficulty determining their SIC code information. To address this transition, SMARTS has been modified to accept both SIC codes and NAICS codes, and NAICS codes are automatically translated into SIC codes. There may be instances of conflict between SIC and NAICS codes. The use of NAICS codes shall not expand or reduce the types of industries subject to this General Permit as compared to the SIC codes listed in the General Permit. State Water Board staff will work closely with the applicant to resolve these conflicts in SMARTS as they are identified. Dischargers should be aware that the use of an NAICS code which results in failure to submit any of the required PRDs under this General Permit remains a violation of the terms of this General Permit.

The facilities included in category one of Attachment A (facilities subject to Subchapter N) are subject to storm water ELGs that are incorporated into the requirements of this General Permit. Dischargers whose facilities are included in this category must examine the appropriate federal ELGs to determine the applicability of those guidelines. This General Permit contains additional requirements (Section XI.D) that apply only to facilities with storm water ELGs.

2. Types of Discharges Not Covered by this General Permit

   a. Discharges from construction and land disturbance activities that are subject to the General Permit for Discharges of Storm Water Associated with Construction Activity (Construction General Permit).

   b. Discharges covered by an individual or general storm water NPDES permit. Some industrial storm water discharges may be regulated by other individual or general NPDES permits issued by the State Water Board or the Regional Water Boards (Water Boards, collectively,). This General Permit shall not regulate these discharges. When the individual or general NPDES permits for such discharges expire, the Water Boards may authorize coverage under this General Permit or another general NPDES permit, or may issue a new individual NPDES permit consistent with the federal and state storm water regulations. Interested parties may request that the State Water Board or appropriate Regional Water Board issue individual or general NPDES permits for specific discharges that, in their view are not properly regulated through this General Permit. General permits may be issued for a particular industrial group or watershed area which

would supersede this General Permit. To date, two Regional Water Board have issued such permits:

i. The Lahontan Regional Water Board has adopted an NPDES permit and general Waste Discharge Requirements to regulate discharges from marinas and maintenance dredging (Regional Water Board Order R6T-2005-0015 - NPDES Permit No. CAG616003) in the Lake Tahoe Hydrologic Unit.

ii. The Santa Ana Regional Water Board adopted the Sector Specific General Permit for Stormwater Runoff Associated with Industrial Activities from Scrap Metal Recycling Facilities within the Santa Ana Region, Order R8-2012-0012, NPDES Permit No. CAG 618001 (Scrap Metal Recycling Permit). The Scrap Metal Recycling Permit is applicable to facilities within the Santa Ana Region that are listed under Standard Industrial Classification (SIC) Code 5093 and engaged in the following types of activities: (1) automotive wrecking for scrap-wholesale (this category does not include facilities engaged in automobile dismantling for the primary purpose of selling second hard parts); (2) iron and steel scrap - wholesale; (3) junk and scrap metal - wholesale; (4) metal waste and scrap - wholesale; and (5) non-ferrous metals scrap - wholesale. Other types of facilities listed under SIC Code 5093 and engaged in waste recycling are not required to get coverage under the Scrap Metal Recycling Permit. A list of covered facilities as of February 8, 2011 was included in Attachment A of the Scrap Metal Recycling Permit.

c. Discharges that the Regional Water Boards determine to be ineligible for coverage under this General Permit. In such cases, a Regional Water Board will require the discharges be covered by another individual or general NPDES permit. The applicability of this General Permit to such discharges is terminated when the discharge is subject to another individual or general NPDES permit.

d. Discharges that do not enter waters of the United States. These include:

i. Discharges to municipal separate sanitary sewer systems;

ii. Discharges to evaporation ponds, discharges to percolation ponds, and/or any other methods used to retain and prevent industrial storm water discharges from entering waters of the United States;

iii. Discharges to combined sewer systems. In California, the only major combined sewer systems are located in San Francisco and downtown Sacramento. Dischargers who believe they discharge into a combined sewer system should contact the local Regional Water Board to verify discharge location; and,

iv. Dischargers Claiming the “No Discharge” Option in the Notice of Non-Applicability (NONA) (Fact Sheet Section II.S).

e. Discharges from mining operations or oil and gas facilities composed entirely of flows that are from conveyances or systems of conveyances used for collecting and conveying precipitation runoff and do not come into contact with any overburden, raw materials, intermediate products, finished products, by-products, or waste products located at the facility. (33 U.S.C. § 1342(l)(2).)

f. Discharges from facilities on Tribal Lands regulated by U.S. EPA.

3. Obtaining General Permit Coverage (Section II of this General Permit)

   The State Water Board has developed the SMARTS online database system to handle registration and reporting under this General Permit. More information regarding SMARTS and access to the database is available online at https://smarts.waterboards.ca.gov. The State Water Board has determined that all documents related to general storm water enrollment and compliance must be certified and submitted via SMARTS by Dischargers.

   This General Permit requires all Dischargers to electronically certify and submit PRDs via SMARTS to obtain: (1) regulatory coverage, or (2) to certify that there are no industrial activities exposed to storm water at the facility and obtain regulatory coverage under the NEC provision of this General Permit. Facilities that were eligible to self-certify no exposure under the previous permit (see category 10 in Attachment 1 of the previous permit) are required to certify and submit via SMARTS PRDs for NOI coverage under this General Permit by July 1, 2015 or for NEC coverage by October 1, 2015. The Water Board is estimating that 10,000 – 30,000 Dischargers may be registering for NOI or NEC coverage under this General Permit. Separate registration deadlines, one for NOI coverage and one for NEC coverage, provides Dischargers better assistance from Storm Water Helpdesk and staff.

   Dischargers shall electronically certify and submit the PRDs via SMARTS for each individual facility. This requirement is intended to establish a clear accounting of the name, address, and contact information for each Discharger, as well as a description of each Discharger's facility.

   The Water Boards recognize that certain information pertaining to an industrial facility may be confidential. Many Stakeholders were asking for clarification on the process the Water Boards would use to manage confidential information or the process Dischargers could use to redact such information. Dischargers may redact trade secrets information from required submittals (Section II.B.3.d). Dischargers are required to include a general description of the redacted information and the basis for the redaction. Dischargers are still required to submit complete and un-redacted versions of the information to the Water Boards within 30 days, however these versions should be clearly labeled "CONFIDENTIAL" so that the confidentiality of these documents is clear to Regional Water Board staff, even when there is a change in staff. This General Permit requires that all information provided to the Water Boards by the Discharger comply with the Homeland Security Act and other federal law that addresses security in the United States.

   All Dischargers who certify and submit PRDs via SMARTS for NOI coverage on or after July 1, 2015 or for NEC coverage on or after October 1, 2015, shall immediately comply with the provisions in this General Permit.

4. General Permit Coverage for Landfills

   This General Permit covers storm water discharges from landfills, land application sites, and open dumps that receive or have received industrial waste from any

facility covered by this General Permit. Industrial storm water discharges from these facilities must be covered by this General Permit unless (1) they are already covered by another NPDES permit, or (2) the Regional Water Board has determined that an NPDES permit is not required because the site has been stabilized or required closure activities have been completed.

In most cases, it is appropriate for new landfill construction or final closure to be covered by the Construction General Permit, rather than this General Permit. Questions have arisen as to what constitutes new landfill construction at an existing landfill versus the normal planned expansion of a landfill. Similarly, questions have arisen about the type of closure activities that may be subject to the Construction General Permit versus the normal closure of "cells" that occurs during continued landfill operations and are not subject to the Construction General Permit. Other questions such as whether temporary or permanent newly graded/paved roads disturbing greater than one acre at a landfill are subject to the Construction General Permit. Landfill Dischargers have asked for clarity regarding these questions. The previous permit required Dischargers to contact the Regional Water Boards to determine permit appropriateness. Site specific circumstances continue to require Dischargers to contact Regional Water Boards for final determinations.

Based upon the State Water Board's storm water program history, there are only a handful of instances where an operating landfill has been simultaneously subject to both the construction and industrial permitting requirements. Typically a landfill is subject to the construction permitting requirements during the time the landfill is initially constructed and prior to operation. A landfill is subject to the industrial permitting requirements during landfill operations, and subject to the construction permitting requirements during final landfill closure activities.

Once a landfill begins operations, continued expansion or closure of incremental landfill cells is authorized under the industrial permitting requirements since these are normal aspects of landfill operations. These expansion/closure activities occur within a limited timeframe (often taking less than 90 days from beginning to end) and are not separately subject to additional local approval (e.g., a new building permit). Any construction or demolition of temporary non-impervious roads directly related to landfill operations are subject to the industrial permitting requirements.

Construction or closure of a separate section of the landfill that is either subject to additional permitting by the local authorities and/or lasts more than 90 days requires coverage under the Construction General Permit. Construction of permanent facility structures such as buildings and impervious parking lots or roads that disturb greater than one acre are also subject to the Construction General Permit. (Permanent facility structures are defined as any structural improvements designed to remain until the landfill is closed.)

Site specific circumstances such as proximity to nearby waterways, extent of activities, pollutants of concern, and other considerations can impact any decision as to whether a particular activity is to be regulated under this General Permit or the Construction General Permit. Regional Water Boards will continue to exercise their discretion as necessary to protect the beneficial uses of the receiving water(s).

5. General Permit Coverage for Small Municipal Separate Storm Sewer Systems (MS4s)

   Section 1068 of the Intermodal Surface Transportation Efficiency Act of 1991 exempted municipal agencies serving populations of less than 100,000 from Phase I permit requirements other than sanitary landfills, power plants, and airports facilities. U.S. EPA's Phase II regulations eliminated the above exemption as of March 10, 2003. All facilities in Attachment A of this General Permit that are operated by a small municipal agency are subject to NPDES storm water permitting requirements and this General Permit.

6. Changes to General Permit Coverage

   Dischargers who no longer operate a facility required to be covered under this General Permit (either NOI or NEC coverage) are required to electronically certify and submit via SMARTS a Notice of Termination (NOT). An NOT is required when there is a change in ownership of the industrial activities subject to permitting or when industrial activities subject to permitting are permanently discontinued by the Discharger at the site. When terminating NOI coverage, Dischargers may only submit an NOT once all exposure of industrial materials and equipment have been eliminated. Dischargers may not submit NOTs for temporary or seasonal facility closures. The General Permit requires Dischargers to implement appropriate BMPs to reduce or prevent pollutants in storm water discharges during the temporary facility closure.

   This General Permit allows Dischargers to change General Permit coverage, as appropriate, from NOI coverage to NEC coverage or from NEC coverage to NOI coverage.

B. Discharge Prohibitions

This General Permit covers industrial storm water discharges and authorized NSWDs from industrial facilities and prohibits any discharge of materials other than storm water and authorized NSWDs (Section III and Section IV of this General Permit). It is a violation of this General Permit to discharge hazardous substances in storm water in excess of the reportable quantities established in 40 Code of Federal Regulations sections 117.3 and 302.4.

The State Water Board is authorized, under Water Code section 13377, to issue NPDES permits which apply and ensure compliance with all applicable provisions of the CWA, and any more stringent limitations necessary to implement water quality control plans, protect beneficial uses, and prevent nuisance.

C. Non-Storm Water Discharges (NSWDs)

Unauthorized NSWDs can be generated from various pollutant sources. Depending upon their quantity and location where generated, unauthorized NSWDs can discharge to the storm drain system during dry weather as well as during a storm event (comingled with storm water discharge). These NSWDs can consist of, but are not limited to; (1) waters generated by the rinsing or washing of vehicles, equipment,

buildings, or pavement, or (2) fluid, particulate or solid materials that have spilled, leaked, or been disposed of improperly.

Some NSWDs are not directly related to industrial activities and normally discharge minimal pollutants when properly managed. Section IV of this General Permit provides a limited list of NSWDs that are authorized if Dischargers implement BMPs to prevent contact with industrial materials prior to discharge. The list in Section IV is similar to the list provided in the 2008 MSGP but does not include pavement and external building surfaces washing without detergents. These two items are not included because the Discharger is responsible to reduce or prevent pollutants in storm water discharges from paved areas and buildings associated with industrial activities. Since industrial materials and non-industrial material likely co-exist, the washing of paved areas and external building surfaces may result in discharges of pollutants associated with industrial activities. In addition, washing activities generally occur during dry-weather periods when receiving water flows are lower than wet-weather periods. Wash waters are likely to discharge in higher concentrations than would occur if these pollutants were naturally discharged during a storm event. The discharge of high concentration wash water during a time of dry-weather flows is inconsistent with the goal of protecting receiving waters. These discharges are, therefore, considered unauthorized NSWDs. Similar to the 2008 MSGP, firefighting related discharges are not subject to this General Permit.

A major required element of the SWPPP is the identification and measures for elimination of unauthorized NSWDs. Unauthorized NSWDs can contribute a significant pollutant load to receiving waters. Measures to control spills, leakage, and dumping can often be addressed through BMPs. This General Permit's BMP requirements for NSWDs remain essentially unchanged from the previous permit other than the increased frequency of required visual observations from quarterly to monthly. See Section XI.A.1 of this General Permit.

D. Effluent Limitations

1. Technology-Based and Water Quality-Based Effluent Limitations

   CWA Section 301(b)(1)(C) requires that discharges from existing facilities must, at a minimum, comply with technology-based effluent limitations based on the technological capability of Dischargers to control pollutants in their discharges. Discharges must also comply with any more stringent water quality-based limitations necessary to meet water quality standards in accordance with CWA Section 301(b)(1)(C). Water quality-based limitations are discussed in Section E of this Fact Sheet titled "Receiving Water Limitations." Both technology-based effluent limitations and water quality-based limitations are implemented through NPDES permits. (CWA sections 301(a) and (b).)

2. Types of Technology-Based Effluent Limitations

   All NPDES permits are required to contain technology-based effluent limitations (TBELs). (40 C.F.R. §§122.44(a)(1) and 125.3.) TBELs may consist of effluent limitations guidelines (ELGs) established by U.S. EPA through regulation, or may be developed using best professional judgment on a case-by-case basis.

The CWA sets forth standards for TBELs based on the type of pollutant or the type of facility/source involved. The CWA establishes two levels of pollution control for existing sources. For the first level, existing sources that discharge pollutants directly to receiving waters were initially subject to effluent limitations based on the "best practicable control technology currently available" (BPT). (33 U.S.C. § 1314(b)(1)(B).) BPT applies to all pollutants. For the second level, existing sources that discharge conventional pollutants are subject to effluent limitations based on the "best conventional pollutant control technology" (BCT). (33 U.S.C. §1314(b)(4)(A); see also 40 C.F.R. §401.16 (list of conventional pollutants).) Also for the second level, other existing sources that discharge toxic pollutants or "nonconventional" pollutants ("nonconventional" pollutants are pollutants that are neither "toxic" nor "conventional") are subject to effluent limitations based on "best available technology economically achievable" (BAT). (33 U.S.C. §1311(b)(2)(A); see also 40 C.F.R. §401.15 (list of toxic pollutants).) The factors to be considered in establishing the levels of these control technologies are specified in section 304(b) of the CWA and in U.S. EPA's regulations at 40 C.F.R. §125.3.

When establishing ELGs for an industrial category, U.S. EPA evaluates a wide variety of technical factors to determine BPT, BCT, and BAT. U.S. EPA considers the specific factors of an industry such as pollutant sources, industrial processes, and the size and scale of operations. U.S. EPA evaluates the specific treatment, structural, and operational source control BMPs available to reduce or prevent pollutants in the discharges. The costs of implementing BMPs to address these factors are weighed against their effectiveness and ability to protect water quality. Factors such as industry economic viability, economies of scale, and retrofit costs are also considered.

To date, U.S. EPA has: (1) not promulgated storm water ELGs for most industrial categories, (2) not established NELs within all ELGs that have been promulgated, and (3) exempted certain types of facilities within an industrial category from complying with established ELGs. The feedlot category (40 Code of Federal Regulations part 412) provides an example of several of these points. In that instance, U.S. EPA did not establish numeric effluent limitations but instead: (1) established a narrative effluent limitation requiring retention of all feedlot-related runoff from a 25-year, 24-hour storm, and (2) limited application of the ELG to feedlots with a minimum number of animals. U.S. EPA also recently promulgated ELGs for the "Construction and Development (C&D)" industry, which included, among many other limitations, conditional numeric effluent limitations. Though the NELs in these ELGs were later stayed by U.S. EPA, the ELGs exempted construction sites of less than 30 acres from complying with the established numeric effluent limitations.

40 Code of Federal Regulations, Chapter I, Subchapter N ("Subchapter N"), includes over 40 separate industrial categories where the U.S. EPA has established ELGs for new and existing industrial wastewater discharges to surface waters, discharges to publicly owned treatment works (pre-treatment standards), and storm water discharges to surface waters. Generally, U.S. EPA has focused its efforts on the development of ELGs for larger industries and those industries with the greatest

potential to pollute. In total, the 40 categories for which ELGs have been established (not including construction) represent less than 10 percent of the types of facilities subject to this General Permit. Additionally, most ELGs focus on industrial process wastewater discharges and pre-treatment standards, and only 11 of the 40 categories establish numeric or narrative ELGs for industrial storm water discharges. Those that do include ELGs for industrial storm water discharges generally address storm water discharges that are generated from direct contact with primary pollutant sources at the subject facilities, and not the totality of the industrial storm water discharge from the facility, as the term "storm water discharge associated with industrial activity" for this General Order is defined in the CWA. (40 C.F.R. § 122.26(b)(14).) Where U.S. EPA has not issued effluent limitation guidelines for an industry, the State Water Board is required to establish effluent limitations for NPDES permits on a case-by-case basis based on best professional judgment (BPJ). (33 U.S.C. § 1342(a)(1); 40 C.F.R. § 125.3(c)(2).) In this General Permit, most of the TBELs are based on BPJ decision-making because no ELG applies.

The TBELs in this General Permit represent the BPT (for conventional, toxic, and non-conventional pollutants), BCT (for conventional pollutants), and BAT (for toxic pollutants and non-conventional pollutants) levels of control for the applicable pollutants. If U.S. EPA has not promulgated ELGs for an industry, or if a Discharger is discharging a pollutant not covered by the otherwise applicable ELG, the State Water Board is required to establish effluent limitations in NPDES permit limitations based on best professional judgment . (33 U.S.C. § 1342(a)(1); 40 C.F.R. 125.3(c).) This General Permit includes TBELS established on best professional judgment and limitations based on storm water-specific ELGs listed in Attachment F of this General Permit, where applicable.

3. Authority to Include Non-Numeric Technology-Based Limits in NPDES Permits

TBELs in this General Permit are based on best professional judgment and are non-numeric ("narrative") technology-based effluent limitations expressed as requirements for implementation of effective BMPs. Federal regulations provide that permits must include BMPs to control or abate the discharge of pollutants when where "[n]umeric effluent limitations are infeasible." 40 C.F.R. 122.44(k)(3).

Since 1977, courts have recognized that there are circumstances when numeric effluent limitations are infeasible and have held that EPA may issue permits with conditions (e.g., BMPs) designed to reduce the level of effluent discharges to acceptable levels. Natural Res. Def. Council, Inc. v. Costle, 568 F.2d 1369 (D.C.Cir.1977).

U.S. EPA has also interpreted the CWA to allow BMPs to take the place of numeric effluent limitations under certain circumstances. 40 C.F.R. §122.44(k), titled "Establishing limitations, standards, and other permit conditions (applicable to State NPDES programs ...)," provides that permits may include BMPs to control or abate the discharge of pollutants when: (1) "[a]uthorized under section 402(p) of the CWA for the control of stormwater discharges"; or (2) "[n]umeric effluent limitations are infeasible." 40 C.F.R. § 122.44(k).

In 2006, The U.S. Court of Appeals for the Sixth Circuit held that the CWA does not require U.S. EPA to set numeric limits where such limits are infeasible. (Citizens Coal Council v. United States Environmental Protection Agency, 447 F.3d 879, 895-96 (6th Cir. 2006)). The Citizens Coal court cited to the statement in Waterkeeper Alliance, Inc. v. EPA, 399 F.3d 486, 502 (2d Cir. 2005) that "site-specific BMPs are effluent limitations under the CWA" in concluding that "the EPA's inclusion of numeric and non-numeric limitations in the guideline for the coal remining subcategory was a reasonable exercise of its authority under the CWA." (447 F.3d at 896.) Additionally, the Citizen's Coal court cited to Natural Res. Def. Council, Inc. v. EPA, 673 F.2d 400, 403 (D.C.Cir.1982) noting that "section 502(11) [of the CWA] defines 'effluent limitation' as 'any restriction' on the amounts of pollutants discharged, not just a numerical restriction." NPDES permit writers have substantial discretion to impose non-quantitative permit requirements pursuant to section 402(a)(1)), especially when the use of numeric limits is infeasible. (NRDC v. EPA, 822 F.2d 104, 122-24 (D.C. Cir. 1987); 40 C.F.R. 122.44(k)(3).)

4. Decision to Include Non-Numeric Technology-Based Effluent Limits in This General Permit

   It is infeasible for the State Water Board to develop numeric effluent limitations using the best professional judgment approach due to lack of sufficient information. Previous versions of this General Permit required Dischargers to sample their industrial storm water discharges and report the results to the Regional Water Boards. Dischargers were not required to submit this data online into a statewide database; as a result, much of this data is not available for analysis. Moreover, much of the data that are available for analysis are not of sufficient quality to make conclusions or perform basic statistical tests.

   The Blue Ribbon Panel of Experts, State Water Board staff, and many stakeholders evaluated the available storm water data set and concluded that the information provides limited value due to the limited pool of industrial facilities submitting data, poor overall data quality, and extreme variance within the dataset, as described below.

   The poor quality of the existing data set is attributable a number of factors. For example, the previous permits have required Dischargers to sample during the first hour of discharge from two storm events a year. This sampling schedule was designed to catch what was considered to represent the higher end of storm water discharge concentrations for most parameters. The results from this type of sampling were thought to be an indicator of whether or not additional BMPs would be necessary. The sampling schedule was not designed, however, to estimate pollutant discharge loading, or to characterize the impact of the discharge on the receiving water. Doing so would normally require the use of more advanced sampling protocols such as flow meters, continuous automatic sampling devices, certified/trained sampling personnel, and other facility-specific considerations.

   Furthermore, there is currently no data which details the relationship between the BMPs implemented at each facility and the facility's sampling results. The SWPPPs

required by the previous permits were not submitted to the Water Boards, but were kept onsite by Dischargers. Due to the limited availability of quality sampling data and "level of effort" information contained in SWPPPs, the State Water Board is unable to exercise best professional judgment to make the connection between effluent quality (sampling results) and the level of effort, costs, and performance of the various technologies that is needed in order to express the TBELs in this General Permit numerically, as NELs.

Some stakeholders have suggested that separating the data sets by industry type would lead to more reliable data with which to develop NELs. Advocates of this approach suggest that the variability of the data may be caused in part by the mixing of data from different industrial categories. The State Water Board believes that the variation is primarily due to storm intensity, duration, time of year, soil saturation or some other factors. It is necessary to collect information related to those factors and BMPs implemented in order to evaluate the variability attributable to those factors. There is currently too large of an information gap to begin the process of developing NELs for all industrial sectors not currently subject to ELGs.

The State Water Board has proposed NELs in past drafts of this General Permit. In comments, many stakeholders have highlighted the difficulty of developing statewide NELs that are applicable to all industry sectors, or even NELs that cover any specific industry sectors. For example, stakeholders have commented that:

a. Background/ambient conditions in some hydrogeologic zones may contribute pollutant loadings that would significantly contribute to, if not exceed, the NEL values;

b. Some advanced treatment technologies have flow/volume limitations as well as economy of scale issues for smaller facilities;

c. Treatment technologies that require that sheet flows be captured and conveyed via discrete channels or basins may not only result in significant retrofit costs, but may conflict with local ordinances that prohibit such practices, as they can cause damage or erosion to down gradient property owners, or cause other environmental problems;

d. There is insufficient regulatory guidance and procedures to allow permit writers to properly specify monitoring frequency and sampling protocols (e.g., instantaneous maximum, 1-day average, 3-day average, etc.), and for Dischargers to obtain representative samples to compare to NELs for the purpose of strict compliance; and,

e. NELs must be developed with consideration of what is economically achievable for each industrial sector. These stakeholders point out that the U.S. EPA goes to great lengths evaluating the various BMP technologies available for a particular pollutant, the costs and efficiency of each BMP, and the applicability of the BMPs to the industry as a whole or to a limited number of industrial sites based upon the size of the facility, the quantity of material, and other considerations.

The State Water Board does not have the information (including monitoring data, industry specific information, BMP performance analyses, water quality information, monitoring guidelines, and information on costs and overall effectiveness of control technologies) necessary to promulgate NELs at the time of adoption of this General Permit. Therefore, it is infeasible to include NELs in this statewide General Permit.

Many of the new requirements in this General Permit have been designed to address the shortcomings of previous permits and the existing storm water data set. Under this General Permit, sampling results must be certified and submitted into SMARTS by Dischargers, along with SWPPPs which outline the technologies and BMPs used to control pollutants at each facility. The ERA process will also collect information on costs and the engineering aspects of the various control technologies employed by each facility. Previous permit versions did not have a mechanism for receiving this site specific information electronically, and only a small percentage of Dischargers submitted their Annual Reports via SMARTS. This General Permit will make this information more accessible, allowing the Water Boards to evaluate the relationship between BMPs and the ability of facilities to meet the NALs set forth in this General Permit. Finally, the new Qualified Industrial Storm Water Practitioner (QISP) training requirements of this General Permit have been designed in part to improve the quality of the data submitted.

5. Narrative Technology-Based Effluent Limitations (TBELs) and Best Management Practices (BMPs)

   The primary TBEL in this General Permit requires Dischargers to "implement BMPs that comply with the BAT/BCT requirements of this General Permit to reduce or prevent discharges of pollutants in their storm water discharge in a manner that reflects best industry practice considering technological availability and economic practicability and achievability." (Section V.A of this General Permit). This TBEL is a restatement of the BAT/BCT standard, as articulated by U.S. EPA in the 2008 MSGP and accompanying Fact Sheet. In order to comply with this TBEL, Dischargers must implement BMPs that meet or exceed the BAT/BCT technology-based standard. The requirement to "reduce or prevent" is equivalent to the requirement in the federal regulations that BMPs be used in lieu of NELs to "control or abate" the discharge of pollutants. (40 C.F.R. § 122.44(k).)

   BMPs are defined as the "scheduling of activities, prohibitions of practices, maintenance procedures, and other management practices to reduce or prevent the discharge of pollutants… includ[ing] treatment requirements, operating procedures, and practices to control site runoff, spillage or leaks, sludge or waste disposal, or drainage from raw material storage." (40 C.F.R. § 122.2.)

   This General Permit (Sections X.H.1 and X.H.2) requires all Dischargers to implement minimum BMPs, as well as any advanced BMPs that are necessary to adequately reduce or prevent pollutants in discharges consistent with the TBELs. The minimum BMPs specified in this General Permit represent common practices that can be implemented by most facilities. This General Permit generally does not mandate the specific mode of design, installation or implementation for the minimum

BMPs at a Discharger's facility. It is up to the Discharger, in the first instance, to determine what must be done to meet the applicable effluent limits. For example, Section X.H.1.a.vi of this General Permit requires Dischargers to contain all stored non-solid industrial materials that can be transported or dispersed via wind or contact with storm water. How this is achieved will vary by facility: for some facilities, all activities may be moved indoors, while for others this will not be feasible. However, even for the latter, many activities may be moved indoors, others may be contained using tarps or a containment system, while still other activities may be limited to times when exposure to precipitation is not likely. Each of these control measures is acceptable and appropriate depending upon the facility-specific circumstances.

BMPs can be actions (including processes, procedures, schedules of activities, prohibitions on practices and other management practices), or structural or installed devices to reduce or prevent water pollution. (40 C.F.R. § 122.2.) They can be just about anything that is effective at preventing pollutants from entering the environment, and for meeting applicable limits of this General Permit. In this General Permit, Dischargers are required to select, design, install, and implement facility-specific control measures to meet these limits. Many industrial facilities already have such control measures in place for product loss prevention, accident and fire prevention, worker health and safety or to comply with other environmental regulations. Dischargers must tailor the BMPs detailed in this General Permit to their facilities, as well as improve upon them as necessary to meet permit limits. The examples detailed in this Fact Sheet emphasize prevention over treatment. However, sometimes more traditional end-of-pipe treatment may be necessary, particularly where a facility might otherwise cause or contribute to an exceedance of water quality standards.

This General Permit requires Dischargers to implement BMPs "to the extent feasible." Consistent with the control level requirements of the CWA, for the purposes of this General Permit, the requirement to implement BMPs "to the extent feasible" means to reduce and/or prevent discharges of pollutants using BMPs that represent BAT and BPT in light of best industry practice.[4] In other words, Dischargers are required to select, design, install and implement BMPs that reduce or prevent discharges of pollutants in their storm water discharge in a manner that reflects best industry practice considering their technological availability and economic practicability and achievability.

To determine technological availability and economic practicability and achievability, Dischargers need to consider what control measures are considered "best" for their industry, and then select and design control measures for their site that are viable in terms of cost and technology. The State Water Board believes that for many facilities minimization of pollutants in storm water discharges can be achieved without using highly engineered, complex treatment systems. The BMPs included in

[4] Because toxic and nonconventional pollutants are controlled in the first step by BPT and in the second step by BAT, and the second level of control is "increasingly stringent" (EPA v. National Crushed Stone, 449 U.S. 64, 69 (1980), for simplicity of discussion, the rest of this discussion will focus on BAT. Similarly, because the BAT levels of control in this General Permit are expressed as BMPs and pollution prevention measures, they will also control conventional pollutants. Therefore this discussion will focus on BAT rather than BCT or BPT for conventional pollutants.

this General Permit emphasize effective “low-tech” controls, such as regular cleaning of outdoor areas where industrial activities may take place, proper maintenance of equipment, diversion of storm water around areas where pollutants may be picked up, and effective advanced planning and training (e.g., for spill prevention and response).

E. Receiving Water Limitations and Water Quality Standards

Pursuant to CWA section 301(b)(1)(C) and Water Code section 13377, this General Permit requires compliance with receiving water limitations based on water quality standards. The primary receiving water limitation requires that industrial storm water discharges not cause or contribute to an exceedance of applicable water quality standards. Implementation of the BMPs as required by the technology-based effluent limitation in Section V of this General Permit will typically result in compliance with the receiving water limitations. The discussion of BMPs in this General Permit generally focuses on requiring implementation of BMPs to the extent necessary to achieve compliance with the technology-based effluent limitations, because the technology-based limitations apply similarly to all facilities. In addition, however, this General Permit also makes it clear that, if any individual facility's storm water discharge causes or contributes to an exceedance of a water quality standard, that Discharger must implement additional BMPs or other control measures that are tailored to that facility in order to attain compliance with the receiving water limitation. A Discharger that is notified by a Regional Water Board or who determines the discharge is causing or contributing to an exceedance of a water quality standard must comply with the Water Quality Based Corrective Actions found in Section XX.B of this General Permit.

Water Quality Based Corrective Actions are different from the Level 1 and Level 2 ERAs that result from effluent-based monitoring. It is possible for a Discharger to be engaged in Level 1 or Level 2 ERAs for one or more pollutants and simultaneously be required to perform Water Quality Based Corrective Actions for one or more other pollutants.

Failure to comply with these additional Water Quality Based Corrective Action requirements is a violation of this General Permit. If additional operational source control measures do not adequately reduce the pollutants, Dischargers must implement additional measures such as the construction of treatment systems and/or overhead coverage. Overhead coverage is any structure or temporary shelter that prevents the vertical contact of precipitation with industrial materials or activities. If the Regional Water Board determines that the Discharger’s selected BMPs are inadequate, the Regional Water Board may require implementation of additional BMPs and/or may take enforcement against Dischargers for failure to comply with this General Permit.

F. Total Maximum Daily Loads (TMDLs)

TMDLs are regulatory tools that provide the maximum amount of a pollutant from potential source in the watershed that a water body can receive while attaining water quality standards. A TMDL is defined as the sum of the allowable loads of a single pollutant from all contributing point sources (the waste load allocations) and non-point sources (load allocations), plus the contribution from background sources. (40 C.F.R. § 130.2, subd. (i).) Discharges covered by this General Permit are considered to be point

source discharges, and therefore must comply with effluent limitations that are "consistent with the assumptions and requirements of any available waste load allocation for the discharge prepared by the State and approved by EPA pursuant to 40 Code of Federal Regulations section 130.7." (40 C.F.R. § 122.44, subd. (d)(1)(vii).) In addition, Water Code section 13263, subdivision (a), requires that waste discharge requirements implement relevant water quality control plans. Many TMDLs in existing water quality control plans include both waste load allocations and implementation requirements. Attachment E of this General Permit lists the watersheds with U.S. EPA-approved and U.S. EPA-established TMDLs that include TMDL requirements for Dischargers covered by this General Permit.

NPDES-regulated storm water discharges (which include industrial storm water) must be addressed by waste load allocations in TMDLs. (40 C.F.R. § 130.2(h).) NPDES permits must contain effluent limits and conditions consistent with the requirements and assumptions of the waste load allocations in TMDLs. (40 C.F.R. § 122.44(d)(1)(vii)(B).) To date, the relevant waste load allocations assigned to industrial storm water discharges are not directly translatable to effluent limitations. Many of the TMDLs lack sufficient facility specific information, discharge characterization data, implementation requirements, and compliance monitoring requirements. Accordingly, an analysis of each TMDL applicable to industrial storm water discharges must to be performed to determine if it is appropriate to translate the waste load allocation into a numeric effluent limit, or if the effluent limit is to be expressed narratively using a BMP approach. U.S. EPA recognizes that because storm water discharges are highly variable in frequency and duration and are not easily characterized, it is often not feasible or appropriate to establish numeric limits. Variability and the lack of data available make it difficult to determine with precision or certainty actual and projected loadings for individual Dischargers or groups of Dischargers.

Regardless of whether the effluent limit is to be numeric or narrative, the existing waste load allocations must be carefully analyzed, and in many cases translated, to determine the appropriate effluent limitations. Issues of interpretation exist with all of the waste load allocations applicable to Dischargers, and these issues vary based on the TMDL. Below is an example of one of the simpler issues:

FIGURE 1: Example Waste Load Allocations Proposed Translation: Ballona Creek Estuary – Toxic Pollutants

Metals per Acre Waste Load Allocations for Individual General Construction or Industrial Storm Water Permittees (grams/year/acre)				
Cadmium	Copper	Lead	Silver	Zinc
0.1	3	4	0.1	13
Metals per Acre Waste Load Allocations for Individual General Construction or Industrial Storm Water Permittees (milligrams/year/acre)				
Chlordane	DDTs	Total Polychlorinated biphenyl (PCBs)	Total Polycyclic aromatic hydrocarbons (PAHs)	
0.04	0.14	2	350	

In order for the above waste load allocations to effectively be implemented as effluent limits under the General Permit, the Water Boards must (1) identify which discharges the waste load allocations apply to, (2) identify the acreages of the individual facilities, (3) convert the waste load allocations from grams/year/acre (or milligrams/year/acre) to grams/year (or milligrams/year) based on the acreage at each identified facility, (4) assign the effluent limits to the identified Dischargers, (5) determine appropriate monitoring to assess compliance with the effluent limits, and (6) develop a tracking mechanism for each identified facility and their individual effluent limits. A similar stepwise process is necessary for each TMDL with waste load allocations assigned to industrial storm water discharges. For TMDLs where effluent limits will be expressed as BMPs, analysis must to be performed to determine the appropriate BMPs and the corresponding effectiveness to comply with the assigned waste load allocations.

Some waste load allocations are already expressed as concentration based numbers. It may appear simple to incorporate these values into this General Permit as effluent limits, but the questions still remain regarding how to determine compliance. The monitoring requirements in this General Permit are not designed to measure compliance with a numeric effluent limit or to measure the effect of a discharge on a receiving water body. (See the discussion on monitoring requirements in Fact Sheet Section II.J.) This General Permit requires sampling of four (4) storm events a year, with certain limitations as to when a discharge may be sampled. This method of monitoring may not appropriately serve as TMDL compliance sampling since grab samples are only representative of the particular moment in time when the sample was taken. Since storm water is highly variable, four grab samples per year may not provide sufficient confidence that the effluent limit is being met. An alternative monitoring scheme may be necessary to determine the facility's impact on the receiving water and to determine compliance with any assigned effluent limits. Questions concerning whether sampling results should be grab samples, composite samples, flow-weighted averaged over all drainage areas, etc. cannot be determined for each concentration-based TMDL without a more thorough analysis.

Additionally, monitoring and assessment requirements must be developed for all of the TMDLs to determine compliance with or progress towards meeting TMDL requirements. The proposed monitoring requirements in this General Permit are not designed to assess pollutant loading or determine compliance with TMDL-specific effluent limits.

Due to the large number and variety of discharges subject to a wide range of TMDLs statewide, to prevent a severe delay in the adoption of this General Permit, TMDL-specific permit requirements for the TMDLs listed in Attachment E will be proposed by the Regional Water Boards. Since the waste load allocations and/or implementation requirements apply to multiple discharges in the region(s) the TMDL were developed, the development of TMDL-specific permit requirements is best coordinated at the Regional Water Board level. The development of TMDL-specific permit requirements is subject to notice and a public comment period prior to incorporation into this General Permit.

Regional Water Board staff, with the assistance of State Water Board staff, will develop and submit the proposed TMDL-specific permit requirements for each of the TMDLs

listed in Attachment E by July 1, 2016.[5] After conducting a 30-day public comment period, the Regional Water Boards will propose TMDL-specific permit requirements to the State Water Board for adoption into this General Permit. The Regional Water Boards may also include TMDL-specific monitoring requirements for inclusion in this General Permit, or may issue Regional Water Board orders pursuant to Water Code section 13383 requiring TMDL-specific monitoring. The Regional Water Boards or their Executive Officers may complete these tasks, and the proposed TMDL-specific permit requirements shall have no force or effect until adopted, with or without modification, by the State Water Board. Unless directed to do so by the Regional Water Board, Dischargers are not required to take any additional actions to comply with the TMDLs listed in Attachment E until the State Water Board reopens this General Permit and includes TMDL-specific permit requirements. This approach is consistent with the 2008 MSGP. TMDL-specific permit requirements are not limited by the BAT/BCT technology-based standards.

The Regional Water Boards will submit to the State Water Board the following information for each of the TMDLs listed in Attachment E:

- Proposed TMDL-specific permit requirements, including any applicable effluent limitations, implementation timelines, additional monitoring requirements, reporting requirements, an explanation of how an exceedance of an effluent limitation or a violation of the TMDL will be determined, and required deliverables consistent with the TMDL(s);
- An explanation of how the proposed TMDL-specific permit requirements, timelines, and deliverables are consistent with the assumptions and requirements of applicable waste load allocation(s) to implement the TMDL(s);
- Where a BMP-based approach is proposed, an explanation of how the proposed BMPs will be sufficient to implement applicable waste load allocations; and
- Where concentration-based monitoring is required, an explanation of how the required monitoring, reporting and calculation methodology for an exceedance of an effluent limitation or a violation of the TMDL(s) will be sufficient to demonstrate compliance with the TMDL(s).

Upon receipt of the information described above, the State Water Board will conduct a public comment period and reopen this General Permit to populate Attachment E, the Fact Sheet, and other provisions as necessary in order to incorporate these TMDL-specific permit requirements into this General Permit. Attachment E may also be reopened during the term of this General Permit to add additional TMDLs and corresponding implementation requirements.

This General Permit (Section X.G.2.a.ix) requires a Discharger to identify any additional industrial parameters that may be discharged to a waterbody with a 303(d) impairment identified in Appendix 3 as likely to be associated with industrial storm water. Dischargers may need to implement additional monitoring for any applicable parameters (Section XI.B.6.e). Appendix 3 of this General Permit includes the water bodies with 303(d) impairments or TMDLs for pollutants that are likely to be associated with

[5] Due to the workload associated with the implementation of this General Permit (e.g., training program development, NEC outreach, electronic enrollment and reporting via SMARTS) it is believed that two years in necessary for Staff to complete a comprehensive analysis and stakeholder process for TMDLS applicable to Dischargers under this General Permit.

industrial storm water in black font, and those that are not likely to be associated with industrial storm water in red font. This determination is based on the pollutant or pollutants that are causing each impairment, and the State Water Board's general experience regarding the types of pollutants that are typically found in industrial storm water discharges. The list of waterbodies is from the State Water Boards statewide 2010 Integrated CWA Section 303(d) List / Section 305(b) Report.

Some of the water bodies with 303(d) impairments or TMDLs listed in Appendix 3 of this General Permit are not applicable to Dischargers covered under this General Permit. Appendix 3 indicates these water bodies Dischargers are not required to include in their pollutant source assessment (unless directed to do so by the Regional Water Board).

G. Discharges Subject to the California Ocean Plan

1. Discharges to Ocean Waters

   On October 16, 2012 the State Water Board amended the California Ocean Plan (California Ocean Plan) to require industrial storm water Dischargers with outfalls discharging to ocean waters to comply with the California Ocean Plan's model monitoring provisions. The amended California Ocean Plan requires industrial storm water dischargers with outfalls discharging to ocean waters to comply with the California Ocean Plan's model monitoring provisions. These provisions require Dischargers to: (a) monitor runoff for specific parameters at all outfalls from two storm events per year, and collect at least one representative receiving water sample per year, (b) conduct specified toxicity monitoring at certain types of outfalls at a minimum of once per year, and (c) conduct marine sediment monitoring for toxicity under specific circumstances (California Ocean Plan, Appendix III). The California Ocean Plan provides conditions under which some of the above monitoring provisions may be waived by the Water Boards.

   This General Permit requires dischargers with outfalls that discharge to ocean waters to comply with the California Ocean Plan's model monitoring provisions and any additional monitoring requirements established pursuant to Water Code section 13383. Dischargers who have not developed and implemented a monitoring program in compliance with the California Ocean Plan's model monitoring provisions by January 1, 2015 or seven (7) days prior to commencing operations, whichever is later, are ineligible to obtain coverage under this General Permit.

2. Areas of Special Biological Significance (ASBS) Exception

   The State Water Board adopted the California Ocean Plan (California Ocean Plan) in 1972, and has subsequently amended the Plan. The California Ocean Plan prohibits the discharge of waste to designated ASBS. ASBS are ocean areas designated by the State Water Board as requiring special protection through the maintenance of natural water quality. The California Ocean Plan states that the State Water Board may grant an exception to California Ocean Plan provisions where the State Water Board determines that the exception will not compromise protection of ocean waters for beneficial uses and the public interest will be served.

On March 20, 2012, the State Water Board adopted Resolution 2012-0012 (ASBS Exception), which grants an exception to the California Ocean Plan prohibition on discharges to ASBS for a limited number of industrial storm water Discharger applicants. The ASBS Exception contains "Special Protections" to maintain natural water quality and protect the beneficial uses of the ASBS. In order to legally discharge into an ASBS, these Dischargers must comply with the terms of the ASBS Exception and obtain coverage under this General Permit. This General Permit incorporates the terms of the ASBS Exception and includes the applicable monitoring requirements for all Dischargers discharging to an ASBS under the ASBS Exception.

H. Training Qualifications

This General Permit and the previous permit both require Dischargers to ensure that personnel responsible for permit compliance have an acceptable level of knowledge. Stakeholders have observed that the previous permit did not adequately specify how to comply with various elements of the permit, such as selecting discharge locations representative of the facility storm water discharge and evaluating potential pollutant sources, nor did it provide a clearly outlined Discharger training program. Guidance that is available from outside sources can be complicated to understand or costly to obtain, which can result in many Dischargers developing and implementing deficient SWPPPs and conducting inadequate monitoring activities. Some Dischargers under the previous permit had the resources to hire professional environmental staff or environmental consultants to assist in compliance. Even in those cases, however, there was little certainty that Dischargers received training regarding implementation of the various BMPs being implemented and required monitoring activities under the previous permit. Through this General Permit, the State Water Board seeks to improve compliance and monitoring data quality, and expand each Discharger's understanding of this General Permit's requirements.

This General Permit establishes the Qualified Industrial Storm Water Practitioner (QISP) role. A QISP is someone who has completed a State Water Board sponsored or approved QISP training course and has registered in SMARTS. A QISP is required to implement certain General Permit requirements at the facility once it has entered Level 1 status in the ERA process as described in Section XII of this General Permit. In some instances it may be advisable for a facility employee to take the training, or for a facility to hire a QISP prior to entering Level 1 status as the training will contain information on the new permit requirements and how to perform certain tasks such as selecting discharge locations representative of the facility storm water discharge, evaluating potential pollutant sources, and identifying inadequate SWPPP elements.

Some industry stakeholders have claimed that their staff is already adequately trained. These employees may continue to perform the basic permit functions (e.g. prepare SWPPPs, perform monitoring requirements, and prepare Annual Reports) without receiving any additional training if the facility's sampling and analysis results do not exceed the NALs. This requirement is structured in a manner to reduce the costs of compliance for facilities that may not negatively impact receiving water quality.

California licensed professional civil, industrial, chemical, and mechanical engineers and geologists have licenses that have professional overlap with the topics of this General Permit. The California Department of Consumer Affairs, Board for Professional Engineers, Land Surveyors and Geologists (CBPELSG) provides the licensure and regulation of professional civil, industrial, chemical, and mechanical engineers and professional geologists in California. The State Water Board is developing a specialized self-guided State Water Board-sponsored registration and training program specifically for these CPBELSG licensed engineers and geologists in good standing with CBPELSG. The CBPELSG has staff and resources dedicated to investigate and take appropriate enforcement actions in instances where a licensed professional engineer or geologist is alleged to be noncompliant with CBPELSG's laws and regulations. Actions that result in noncompliance with this General Permit may constitute a potential violation of the CBPELSG requirements and may subject a licensee to investigation by the CBPELSG.

A QISP may represent one or more facilities but must be able to perform the functions required by this General Permit at all times. It is advisable that this individual be limited to a specific geographic region due to the difficulty of performing the needed tasks before, during, and after qualifying storm events may be difficult or impossible if extensive travel is required. Dischargers are required to ensure that the designated QISP has completed the appropriate QISP training course.

This General Permit contains a mechanism that allows for the Water Boards' Executive Director or Executive Officer to rescind the registration of any QISPs who are found to be inadequately performing their duties as a QISP will no longer be able to do so. A QISP may ask the State Water Board to review any decision to revoke his or her QISP registration. Table 1 of this Fact Sheet below describes the different roles that the QISP and California licensed professional engineers have in this General Permit.

TABLE 1: Role-Specific Permit Requirements

Qualifications	Task
QISP	Level 1 ERA Evaluation and report, Level 2 ERA Action Plan, and Technical Report, and the Level 2 ERA extension
California licensed professional engineer	Inactive Mining Operation Certification, SWPPPs for inactive mining, and annual re-certification of Inactive Mining Operation Certification, NONA Technical Reports, and Subchapter N calculations

I. Storm Water Pollution Prevention Plan (SWPPP)

1. General

   This General Permit requires that all Dischargers develop, implement, and retain onsite a site-specific SWPPP. The SWPPP requirements generally follow U.S. EPA's five-phase approach to developing SWPPPs, which has been adapted to reflect the requirements of this General Permit in Figure 2 of this Fact Sheet. This approach provides the flexibility necessary to

establish appropriate BMPs for different industrial activities and pollutant sources. This General Permit requires a Discharger to include in its SWPPP (Section X of this General Permit) a site map, authorized NSWDs at the facility, and an identification and assessment of potential pollutants sources resulting from exposure of industrial activities to storm water.

This General Permit requires that Dischargers clearly describe the BMPs that are being implemented in the SWPPP. In addition to providing descriptions, Dischargers must also describe who is responsible for the BMPs, where the BMPs will be installed, how often and when the BMPs will be implemented, and identify any pollutants of concern. Table 2 of this Fact Sheet provides an example of how a Discharger could assess potential pollution sources and provide a corresponding BMPs summary.

This General Permit requires that Dischargers select an appropriate facility inspection frequency beyond the required monthly inspections if necessary, and to determine if SWPPP revisions are necessary to address any physical or operational changes at the facility or make changes to the existing BMPs (Section X.H.4.a.vii and Section XI.A.4 of this General Permit). Facilities that are subject to multi-phased physical expansion or significant seasonal operational changes may require more frequent SWPPP updates and facility inspections. Facilities with very stable operations may require fewer SWPPP updates and facility inspections.

Failure to develop or implement an adequate SWPPP, or update or revise an existing SWPPP as required, is a violation of this General Permit. Failure to maintain the SWPPP on-site and have it available for inspection is also a violation of this General Permit.

Dischargers are also required to submit their SWPPPs and any SWPPP revisions via SMARTS; accordingly, BMP revisions made in response to observed compliance problems will be included in the revised SWPPP electronically submitted via SMARTS.

DRAFT

FIGURE 2: Five Phases for Developing and Implementing an Industrial Storm Water Pollution Prevention Plan (SWPPP)

PLANNING AND ORGANIZATION

*Form Pollution Prevention Team
*Review other facility plans

ASSESSMENT

*Develop a site map
*Identify potential pollutant sources
*Inventory of materials and chemicals
*List significant spills and leaks
*Identify Non-Storm Water Discharges
*Assess pollutant risk

Best Management Practice (BMP) IDENTIFICATION

*Identify minimum required BMPs
*Identify any advanced BMPs

IMPLEMENTATION

*Train employees for the Pollution Prevention Team
*Implement BMPs
*Collect and review records

EVALUATION / MONITORING

*Conduct annual facility evaluation (Annual Evaluation)
*Review monitoring information
*Evaluate BMPs
*Review and revise SWPPP

DRAFT

TABLE 2: Example - Assessment of Potential Industrial Pollution Sources and Corresponding BMPs Summary

Area	Activity	Pollutant Source	Industrial Pollutant	BMPs
Vehicle and Equipment Fueling	Fueling	Spills and leaks during delivery	Fuel oil	-Use spill and overflow protection
		Spills caused by topping off fuel tanks	Fuel oil	-Train employees on proper fueling, cleanup, and spill response techniques
		Hosing or washing down fuel area	Fuel oil	-Use dry cleanup methods rather than hosing down area -Implement proper spill prevention control program
		Leaking storage tanks	Fuel oil	-Inspect fueling areas regularly to detect problems
		Rainfall running off fueling area, and rainfall running onto and off fueling area	Fuel oil	-Minimize run-on of storm water into the fueling area, cover fueling area

2. Minimum and Advanced BMPs

Section V of this General Permit requires the Discharger to comply with technology-based effluent limitations (TBELs). In this General Permit, TBELs rely on implementation of BMPs for Dischargers to reduce and prevent pollutants in their discharge. The BMP effluent limitations have been integrated into the Section X.H of this General Permit and are divided into two categories – minimum BMPs which are generally non-structural BMPs that all Dischargers must implement to the extent feasible, and advanced BMPs which are generally structural BMPs that must be implemented if the minimum BMPs are inadequate to achieve compliance with the TBELs. Section X of this General Permit includes both substantive control requirements in the form of the BMPs listed in Section X.H, as well as various reporting and recordkeeping requirements. The requirement to implement BMPs "to the extent feasible" allows Dischargers flexibility when implementing BMPs, by not requiring the implementation of BMPs that are not technologically available and economically practicable and achievable in light of best industry practices.

DRAFT

The 2008 MSGP requires Dischargers to comply with 12 non-numeric technology-based effluent limits in Section 2.1.2 of the permit through the implementation of "control measures." This requirement is an expansion of the general considerations outlined in the MSGP adopted in 2000. The control measures specified by the U.S. EPA in the 2008 MSGP are as follows (in order as listed in the 2008 MSGP):

1. Minimize Exposure
2. Good Housekeeping
3. Maintenance
4. Spill Prevention and Response Procedures
5. Erosion and Sediment Controls
6. Management of Runoff
7. Salt Storage Piles or Piles Containing Salt
8. Sector Specific Non-Numeric Effluent Limits
9. Employee Training
10. Non-Storm Water Discharges (NSWDs)
11. Waste, Garbage and Floatable Debris
12. Dust Generation and Vehicle Tracking of Industrial Materials

This General Permit addresses eleven of the above twelve control measures from the 2008 MSGP Section 2.1.2 Non-Numeric Technology-Based Effluent Limits (BPT/BAT/BCT). Eleven of the control measures are addressed as minimum BMPs that the State Water Board has determined to be most applicable to California's Dischargers. Two of those eleven control measures (1- Minimize Exposure, 6 – Management of Runoff) are also identified as advanced BMPs (Section X.H.2 of this General Permit). This General Permit is not a sector-specific permit and therefore does not contain limitations to address control measure number 8 (Sector Specific Non-Numeric Effluent Limits).

The non-structural elements of the control measure to minimize exposure are addressed in the minimum BMP Section X.H.1 of this General Permit while structural control elements are addressed in the advanced BMP Section X.H.2 of this General Permit. The on-site diversion elements of the control measure to minimize exposure are addressed as minimum BMPs.

The runoff reduction elements of the control measure to minimize exposure are included as advanced BMPs. Advanced BMPs that are required to be implemented when a Discharger has implemented the minimum BMPs to the extent feasible and they are not adequate to comply with the TBELs. The advanced BMP categories are: (1) exposure minimization BMPs, (2) storm water containment and discharge reduction BMPs, (3) treatment control BMPs, and (4) additional advanced BMPs needed to meet the effluent limitations of this General Permit. Advanced BMPs are generally structural control measures and can include any BMPs that exceed the minimum BMPs. The control measure for Non-Storm Water Discharges (NSWDs) is addressed in both the discharge prohibitions (Section III) and authorized non-storm water discharges (Section IV) of this General Permit and essentially represents a minimum BMP.

DRAFT

This General Permit encourages Dischargers to utilize BMPs that infiltrate or reuse storm water where feasible. The State Water Board expects that these types of BMPs will not be appropriate for all industrial facilities, but recognizes the many possible benefits (e.g. increased aquifer recharge, reduces flooding, improvements to water quality) associated with the infiltration and reuse of storm water. Encouraging the use of storm water infiltration and reuse BMPs is consistent with the statewide approach to managing storm water with lower impact methods.

The BMPs in this General Permit that coincide with the control measures in the 2008 MSGP are as follows (in order as listed in the 2008 MSGP):

a. Minimization of Exposure to Storm Water

Section 2.1.2.1 of the 2008 MSGP requires Dischargers to minimize the exposure of industrial materials and areas of industrial activity to rain, snow, snowmelt, and runoff. The 2008 MSGP mixes both structural and nonstructural BMPs and specifies particular BMPs to consider when minimizing exposure such as grading/berming areas to minimize runoff, locating materials indoors, spill clean up, contain vehicle fluid leaks or drain fluids before storing vehicles on-site, secondary containment of materials, conduct cleaning activities undercover, indoors or in bermed areas, and drain all wash water to a proper collection system.

This General Permit requires the evaluation of BMPs in the potential pollutant source assessment in the SWPPP (Section X.G.2). When the minimum BMPs are not adequate to comply with the TBELs, Dischargers are required to implement advanced BMPs (Section X.H.2.a). These advanced BMPs may include additional exposure minimization BMPs (Section X.H.2.b.1).

b. Good Housekeeping

Section 2.1.2.2 of the 2008 MSGP requires that Dischargers keep all exposed areas that may be a potential source of pollutants clean and orderly. This General Permit (Section X.H.1.a) seeks to define “clean and orderly” by specifying a required set of nine (9) minimum good housekeeping BMPs, which include: observations of outdoor/exposed areas, BMPs for controlling material tracking, BMPs for dust generated from industrial materials or activities, BMPs for rinse/wash water activities, covering stored industrial materials/waste, containing all stored non-solid industrial materials, preventing discharge of rinse/wash waters/industrial materials, prevent non-industrial area discharges from contact with industrial areas of the facility, and prevent authorized NSWDs from non-industrial areas from contact with industrial areas of the facility.

c. Preventative Maintenance

Section 2.1.2.3 of the 2008 MSGP requires that Dischargers regularly inspect, test, maintain, and repair all industrial equipment to prevent leaks, spills and releases of pollutants that may be exposed to storm water discharged to receiving waters. This General Permit (Section X.H.1.b) incorporates this

concept by requiring four (4) nonstructural BMPs which include: identification and inspection of equipment, observations of potential leaks in identified equipment, an equipment maintenance schedule, and equipment maintenance procedures.

d. Spill and Leak Prevention and Response

Section 2.1.2.4 of the 2008 MSGP requires that Dischargers minimize the potential for leaks, spills and other releases that may be exposed to storm water. Dischargers are also required to develop a spill response plan which includes procedures such as labeling of containers that are susceptible to a spill or a leakage, establishing containment measures for such industrial materials, procedures for stopping leaks/spills, and provisions for notification of the appropriate personnel about any occurrence. This General Permit (Section X.H.1.c) requires implementation of four (4) BMPs to address spills. These BMPs include: developing a set of spill response procedures to minimize spills/leaks, develop procedures to minimize the discharge of industrial materials generated through spill/leaks, identifying/describing the equipment needed and where it will be located at the facility, and identify/training appropriate spill response personnel.

e. Erosion and Sediment Controls

Section 2.1.2.5 of the 2008 MSGP requires the use of structural and/or non-structural control measures to stabilize exposed areas and contain runoff. Also required is the use of a flow velocity dissipation device(s) in outfall channels where necessary to reduce erosion and/or settle out pollutants. This General Permit (Section X.H.1.e) requires the implementation of (5) BMPs to prevent erosion and sediment discharges. The erosion and sediment control BMPs include: implementing effective wind erosion controls, providing for effective stabilization of erodible areas prior to a forecasted storm event, site entrance stabilization/prevent material tracking offsite and implement perimeter controls, diversion of run-on and storm water generated from within the facility away from all erodible materials, and ensuring compliance with the design storm standards in Section X.H.6. U.S. EPA has developed online resources for erosion and sediment controls.[6]

f. Management of Runoff

Section 2.1.2.6 of the 2008 MSGP requires the diversion, infiltration, reuse, containment, or otherwise reduction of storm water runoff, to minimize pollutants in discharges. This General Permit (Sections X.H.1.a.viii, X.H.1.d.iv., and X.H.1.e.iv) requires Dischargers to divert run-on from non-industrial sources and

[6] U.S. EPA. 2008 MSGP. <http://cfpub.epa.gov/npdes/stormwater/msgp.cfm> [as of February 4, 2014].
U.S. EPA. National Menu of BMPs. <http://cfpub.epa.gov/npdes/stormwater/menuofbmps/index.cfm>. [as of February 4, 2014].
U.S. EPA. National Management Measures to Control Nonpoint Source Pollution from Urban Areas <http://water.epa.gov/polwaste/nps/urban/index.cfm>. [as of February 4, 2014].

manage storm water generated within the facility away from industrial materials and erodible surfaces. Runoff reduction is required as an advanced BMP when minimum BMPs are not adequate to comply with the TBELs. The 2008 MSGP encouraged Dischargers to consult with EPA's internet-based resources relating to runoff management.[7]

g. Salt Storage Piles or Piles Containing Salt

Section 2.1.2.7 of the 2008 MSGP requires salt storage piles/piles containing salt that may be discharged to be enclosed or covered and to use BMPs when the salt is being used. This General Permit does not have a minimum BMP specifically for salt storage, however it does require all stockpiled/stored industrial materials be managed in a way to reduce or prevent industrial storm water discharges of the stored/stockpiled pollutants. The good housekeeping (Section X.H.1.a) and material handling and waste management (Section X.H.1.d) minimum BMPs in this General Permit require that all materials readily mobilized by storm water be covered, the minimization of handling of industrial materials or wastes that can be readily mobilized by contact with storm water during a storm event, and the diversion of run-on from stock piled materials.

h. Sector Specific Non-Numeric Effluent Limits

Section 2.1.2.8 of the 2008 MSGP requires Dischargers to achieve any additional non-numeric limits stipulated in the relevant sector-specific section(s) of Part 8 of the 2008 MSGP. This General Permit is not a sector-specific permit and does not contain sector-specific non-numeric effluent limitations like the 2008 MSGP. While this General Permit does not specify sector-specific BMPs, Dischargers are required to select and implement BMPs for their specific facility to reduce or prevent industrial storm water discharges of pollutants to comply with the technology-based effluent limitations. In addition, sectors with applicable ELGs must comply with those ELGs.

i. Employee Training Program

Section 2.1.2.9 of the 2008 MSGP requires all employees engaged in industrial activities or the handling of industrial materials that may affect storm water to obtain training covering implementation of this General Permit. This General Permit (Section X.D.1 and X.H.1.f) requires a facility to establish a Pollution Prevention Team (team members, collectively) responsible for implementing permit requirements such as the SWPPP, monitoring requirements, or BMPs.

The five (5) minimum training BMPs include: ensuring that all team members are properly trained, preparing the proper training materials and manuals, identifying

[7] U.S. EPA. Sector-Specific Industrial Stormwater Fact Sheet Series <www.epa.gov/npdes/stormwater/msgp>. [as of February 4, 2014].
U.S. EPA. National Menu of Stormwater BMPs <www.epa.gov/npdes/stormwater/menuofbmps> [as of February 4, 2014].
U.S. EPA. National Management Measures to Control Nonpoint Source Pollution from Urban Areas (and any similar State or Tribal publications) <www.epa.gov/owow/nps/urbanmm/index.html>. [as of February 4, 2014].

which individuals needs to be trained, providing a training schedule, and maintaining documentation on the training courses and which individuals received the training.

This General Permit also requires a QISP to be assigned to each facility that reaches Level 1 status. One purpose of a QISP is to have an individual available who can provide compliance assistance with these training requirements. The QISP is responsible for training the appropriate team members. Appropriate team members are any team members involved in implementing this General Permit for drainage areas causing NAL exceedances, and any other team members identified by the QISP that need additional training to implement this General Permit.

j. NSWDs

Section 2.1.2.10 of the 2008 MSGP requires that unauthorized NSWDs are eliminated (Part 1.2.3 of the 2008 MSGP lists the NSWDs authorized by the 2008 MSGP). The good housekeeping minimum BMP (Section X.H.1.a.ix of this General Permit) requires that contact between authorized NSWDs and industrial areas of the facility be minimized. This General Permit (Section IV) also includes separate requirements for authorized NSWDs and (Section III) prohibits unauthorized NSWDs.

k. Material Handling and Waste Management

Section 2.1.2.11 of the 2008 MSGP requires that Dischargers ensure waste, garbage, and floatable debris are not discharged into receiving waters. The 2008 MSGP identifies keeping areas clean and intercepting such materials as ways to minimize such discharges. This General Permit (Section X.H.1.d) requires Dischargers to implement six (6) general BMPs that address material handling and waste management. These BMPs include: preventing or minimizing handling of waste or materials during a storm event that could potentially result in a discharge, containing industrial materials susceptible to being dispersed by the wind, covering industrial waste disposal containers when not in use to contain industrial materials, diversion of run-on and storm water generated from within the facility away from all stock piled materials, cleaning and managing spills of such wastes or materials (in accordance with Section X.H.1.e of this General Permit), and conducting observations of outdoor areas and equipment that may come into contact with such materials or waste and become contaminated.

l. Waste, Garbage and Floatable Debris

Section 2.1.2.11 of the 2008 MSGP requires that waste, garbage, and floatable debris are not discharged to receiving waters by keeping exposed areas free of such materials or by intercepting them before they are discharged. Material handling and waste management BMPs are included in Section X.H.1.d of this General Permit. Dischargers are required to: prevent handling of waste materials during a storm event that could result in a discharge, contain waste disposal containers when not in use, clean and manage spills from waste, and observe

outdoor areas and equipment that may come into contact with waste and become contaminated.

m. Dust Generation and Vehicle Tracking of Industrial Materials

Section 2.1.2.12 of the 2008 MSGP requires that generation of dust and off-site tracking of raw, final, or waste materials is minimized. This General Permit does not require minimization of dust generation and vehicle tracking of industrial materials as a minimum BMP directly. Dust generation and vehicle tracking of industrial materials BMPs are included in Section X.H.1.a ("good housekeeping") of this General Permit where Dischargers must prevent dust generation from industrial materials or activities and contain all stored non-solid industrial materials that can be transported or dispersed via wind or come in contact with storm water, and Section X.H.1.d. ("material handling and waste management") of this General Permit, which requires Dischargers to contain non-solid industrial materials or wastes that can be dispersed via wind erosion or come into contact with storm water during handling.

n. Quality Assurance and Record Keeping

Section 2.1.2 of the 2008 MSGP does not directly designate record keeping as a control measure. This General Permit (Section X.H.1.g) includes quality assurance and record keeping as a minimum BMP and requires Dischargers to implement three (3) general BMPs. These BMPs include: developing and implementing procedures to ensure that all elements of the SWPPP are implemented, develop a method of tracking and recording the implementation of all BMPs identified in the SWPPP, and a requirement to keep and maintain those records. This ensures that management procedures are designed and permit requirements are implemented by appropriate staff.

o. Implementation of BMPs in the SWPPP

Like the previous permit, this General Permit does not assign Dischargers a schedule to implement BMPs. Instead, this General Permit requires Dischargers to select the appropriate schedule to implement the minimum BMPs. In addition, this General Permit requires Dischargers to identify, as necessary, any BMPs that should be implemented prior to precipitation events. Although Dischargers are required to maintain internal procedures to ensure the BMPs are implemented according to schedule or prior to precipitation events, Dischargers are only required to certify in the Annual Report whether they complied with the BMP implementation requirements.

Dischargers are required to implement an effective suite of BMPs that meet the technology and water-quality based limitations of this General Permit. Based upon Regional Water Board staff inspections, there is significant variation between Dischargers' interpretations of what BMPs were necessary to comply with the previous permit. This General Permit establishes a new requirement that Dischargers must implement, to the extent feasible, specific minimum BMPs to reduce or prevent the presence of pollutants in their industrial storm water

discharge. In addition, due to the wide variety of facilities conducting numerous and differing industrial activities throughout the state, this General Permit retains the requirement from the previous permit that Dischargers establish and implement additional BMPs beyond the minimum. Implementation of this General Permit's minimum BMPs, together with any necessary advanced BMPs, will result in compliance with the effluent limitations of this General Permit (Section V.A). All Dischargers must evaluate their facilities and determine the best practices within their industry considering technological availability and economic practicability and achievability to implement these minimum BMPs and any advanced BMPs.

The State Water Board has selected minimum BMPs that are generally applicable at all facilities. The minimum BMPs are consistent with the types of BMPs normally found in properly developed SWPPPs and, in most cases, should represent a significant portion of the effort required for a Discharger to achieve compliance. Due to the diverse industries covered by this General Permit, the development of a more comprehensive list of minimum BMPs is not currently feasible. The selection, applicability, and effectiveness of a given BMP is often related to industrial activity type and to facility-specific facts and circumstances. Advanced BMPs must be selected and implemented by Dischargers, based on the type of industry and facility-specific conditions, to the extent necessary to comply with the technology-based effluent limitation requirements of this General Permit.

Failure to implement all of the minimum BMPs to the extent feasible is a violation of this General Permit. (Section X.H.1.) Dischargers must justify any determination that it is infeasible to implement a minimum BMP in the SWPPP (Section X.H.4.b). Failure to implement advanced BMPs necessary to achieve compliance with either the technology or water quality standards requirements in this General Permit is a violation of this General Permit.

p. Temporary Suspension of Industrial Activities

The exception for inactive and unstaffed sites in section 6.2.1.3 of the 2008 MSGP does not require a Discharger with a facility that is inactive and unstaffed with no industrial materials or activities exposed to storm water (in accordance with the substantive requirements in 40 Code of Federal Regulations section 122.26(g)) to complete benchmark monitoring. The Discharger is required to sign and certify a statement in the SWPPP verifying that the site is inactive and unstaffed. If circumstances change and industrial materials or activities become exposed to storm water or the facility becomes active and/or staffed, this exception no longer applies and the Discharger is required to begin complying immediately with the applicable benchmark monitoring requirements under part 6.2 of the 2008 MSGP.

This General Permit allows Dischargers to temporarily suspend monitoring at facilities where industrial activities have been suspended in accordance with Section X.H.3. This is only intended for Dischargers with facilities where it is infeasible to comply with this General Permit's monitoring while activities are

suspended (e.g. remote, unstaffed, or inaccessible facilities during the time of such a suspension). Dischargers are required to update the facility's SWPPP with the BMPs being used to stabilize the site and submit the suspension dates and a justification for the suspension of monitoring via SMARTS.

3. Design Storm Standards for Treatment Control BMPs

It is the State Water Board's intent to minimize the regulatory uncertainty and costs concerning treatment control BMPs in order to encourage the implementation of treatment control BMPs when appropriate. Section X.H.6 of this General Permit specifies a design storm standard for use when treatment controls BMPs are installed. There is both a volume-based and flow-based design storm standard in this General Permit. Both are based on the 85th percentile 24-hour storm event. Without a design storm standard, Dischargers have installed treatment controls using a wide variety of designs that were sometimes either unnecessarily stringent/expensive, or deficient in complying with the requirements of the relevant permit. Some Dischargers have been hesitant to consider treatment options because of the uncertainty concerning acceptable treatment design. The design storm standards are generally expected to:

- Be consistent with the effluent limitations of this General Permit;
- Be protective of water quality;
- Be achievable for most pollutants and their associated treatment technologies; and,
- Reduce the costs associated with treating industrial storm water discharges beyond the levels necessary to achieve compliance with this General Permit.

In lieu of complying with the design storm standards for treatment control BMPs, Dischargers may certify and submit a Level 2 ERA Technical Report, including an Industrial Activity BMPs Demonstration (Section XII.D.2.a of this General Permit). The Level 2 ERA Technical Report requirement is based upon NAL exceedances. . Under this option, a Discharger with Level 2 status must either implement BMPs to eliminate future NAL exceedances, or justify what BMPs must be implemented to comply with this General Permit even if the BMPs will not eliminate future exceedances of NALs. Dischargers who implement treatment control BMPs that vary from the design storm standards in Section X.H.6 must include an analysis showing that their treatment control BMPs comply with this General Permit's effluent limitations in the Industrial Activity BMP Demonstration.

This General Permit does not require Dischargers to retrofit existing treatment controls that do not meet the design storm standard, unless the Discharger determines that the existing treatment controls are not adequate to comply with this General Permit. In addition, once TMDL-specific implementation requirements are added to this General Permit, those Dischargers subject to TMDLs may need to add new or retrofitted treatment control BMPs to meet the TMDL implementation requirements.

To arrive at these design storm standards, the State Water Board has relied heavily on previous Water Board decisions concerning treatment efficacy for municipalities, published documents, stakeholder comments, and reasonableness. In 2000, the State Water Board issued State Water Board Order WQ 2000-11, which upheld Los Angeles Regional Water Board's permit requirements which mandated that all new development and redevelopment exceeding certain size criteria design treatment BMPs based on a specific storm volume: the 85th percentile 24-hour storm event. This design storm standard was based on research demonstrating that the standard represents the maximized treatment volume cut-off at the point of diminishing returns for rainfall/runoff frequency.[8] On the basis of this equation, the maximized runoff volume for 85 percent treatment of annual runoff volumes in California can range from 0.08 to 0.86 inch depending on the imperviousness of the watershed area and the mean amount of rainfall. This design storm standard is referred to as the Standard Urban Storm Water Mitigation Plan's volumetric criterion and there are multiple acceptable methods of calculating this volume. For more information, see the California Stormwater Best Management Practices Handbook.[9]

The San Diego Regional Water Board first established both volumetric and flow-based design storm criteria for NPDES MS4 permits. It is generally accepted by civil engineers doing hydrology work to use twice the peak hourly flow of a specific storm event to use as the basis for flow-based design of BMPs. This General Permit therefore establishes the flow-based design storm standard to be twice the peak hourly flow of the 85th percentile 24-hour storm event.

The primary objective of specifying a design storm standard is to properly size BMPs to, at a minimum, effectively treat the first flush of run-off from all storm events. The economic impacts of treating all storm water from a facility versus the minimal environmental benefit of complete treatment justify the design storm approach. It is unrealistic to require each facility to do a cost benefit analysis of their treatment structures. To simplify the requirements for design, the State Water Board reviewed research from the City of Portland[10] and the City of San Jose[11] to determine the volume of each rain event compared to the amount of events that occur for that volume. The results of their findings show an inflection point that is typically found at approximately the 80 to 85 percentile of recorded storm events.

[8] California Regional Water Quality Control Board Los Angeles Region, Standard Urban Storm Water Mitigation Plans and Numerical Design Standards for Best Management Practices - Staff Report and Record of Decision (Jan. 18, 2000) <http://www.swrcb.ca.gov/rwqcb4/water_issues/programs/stormwater/susmp/susmp_final_staff_report.pdf>. [as of February 4, 2014].

[9] California Stormwater Quality Association, Stormwater Best Management Practice New Development and Redevelopment Handbook (2003) <http://www.casqa.org/>. [as of February 4, 2014].

[10] City of Portland Oregon. Portland Stormwater Management Manual Appendix E.1: Pollution Reduction Methodology E.1-1 (August 1, 2008). <http://www.portlandoregon.gov/bes/article/202909>. [as of February 4, 2014].

[11] California Stormwater Quality Association (CASQA). CASQA BMP Handbook (January 2003) New Development and Redevelopment (Errata 9-04) <http://www.casqa.org/>. [as of February 4, 2014].

Dischargers who install any type of volume-based treatment device are encouraged to consider the BMPs in the California Department of Public Health's guidance manual published July 2012, "Best Management Practices for Mosquito Control in California" at http://www.cdph.ca.gov/HealthInfo/discond/Documents/BMPforMosquitoControl07-12.pdf.

4. Monitoring Implementation Plan

Dischargers are required to prepare and implement a Monitoring Implementation Plan (Section X.I of this General Permit). The Monitoring Implementation Plan requirements are designed to assist the Discharger in developing a comprehensive plan for the monitoring requirements in this General Permit and to assess their monitoring program. The Monitoring Implementation Plan includes a description of visual observation procedures and locations, as well as sampling procedures, locations, and methods. The Monitoring Implementation Plan shall be included in the SWPPP.

J. Monitoring and Reporting Requirements

1. General Monitoring Provisions

This General Permit requires Dischargers to develop and implement a facility-specific monitoring program. Monitoring is defined as visual observations, sampling and analysis. The monitoring data will be used to determine:

a. Whether BMPs addressing pollutants in industrial storm water discharges and authorized NSWDs are effective for compliance with the effluent and receiving water limitations of this General Permit,

b. The presence of pollutants in industrial storm water discharges and authorized NSWDs (and their sources) that may trigger the implementation of additional BMPs and/or SWPPP revisions; and,

c. The effectiveness of BMPs in reducing or preventing pollutants in industrial storm water discharges and authorized NSWDs.

Effluent sampling and analysis information may be useful to Dischargers when evaluating the need for improved BMPs. The monitoring requirements in this General Permit recognize the 2008 MSGP approach to visual observations as an effective monitoring method for evaluating the effectiveness of BMPs at most facilities. Section 6.2 of the 2008 MSGP limits its monitoring sampling requirements to certain industrial categories. Similar to the previous permit, this General Permit requires all Dischargers to sample unless they have obtained NEC coverage or have an inactive mining operation(s) certified as allowed under this General Permit Section XIII.

This General Permit defines a Qualifying Storm Event (QSE) to provide clarity to Dischargers of when sampling is required. The previous permit (Section B.5.a) specified that sampling was required within the first hour of discharge, however, this General Permit requires Dischargers to sample within four hours of the start of Discharge. Many Dischargers were not able to get samples of their discharge locations within one (1) hour under the previous permit so this general permit has expanded the timeframe allowed to provide enough time to sample all discharge locations. The previous permit required three working dry days before sampling and this General Permit defines this period as 48 hours, this timeframe was decreased to provide more opportunities for Dischargers to obtain samples. This General Permit does not specify a volume for sampling due to the complexity of using rain gauges and the limited access of rain gauge station data.

Dischargers are only required to obtain samples required during scheduled facility operating hours and when sampling conditions are safe in accordance with Section XI.C.6.a.ii of this General Permit. If a storm event occurs during unscheduled facility operating hours (e.g. during the weekend or night) and during the 12 hours preceding the scheduled facility operating hours, the Dischargers is still responsible for obtaining samples at discharge locations that are still producing a discharge at the start of facility operations. Under the previous permit, many Dischargers were unable to obtain samples due to rainfall beginning at night.

The State Water Board recognizes that it may not be feasible for all facilities to obtain four QSEs in a reporting year because there may not be enough qualifying storm events to do so. Therefore, a Discharger that is unable to collect and analyze storm water samples from two QSEs in each half of a reporting year due to a lack of QSEs is not in violation of Section XI.B.2. Dischargers that miss four QSEs during a reporting year due to the fact that four QSEs did not occur are not required to make up these sampling events in subsequent reporting years.

The State Water Board recognizes that each facility has unique physical characteristics, industrial activities, and/or variations in BMP implementation and performance which warrants the requirement that each facility demonstrate its compliance. Figure 3 of this Fact Sheet provides a summary of all the monitoring-related requirements of this General Permit. This General Permit's monitoring requirements include sampling and analysis requirements for specific indicator parameters that indicate the presence of pollutants in industrial storm water discharges. The "indicator parameters" are oil and grease (for petroleum hydrocarbons), total suspended solids (for sediment and sediment bound pollutants) and pH (for acidic and alkaline pollutants). Additionally, Dischargers are required to evaluate their facilities and analyze samples for additional facility-specific parameters. These monitoring program requirements are designed to provide useful, cost-effective, timely, and easily obtained information to assist Dischargers as they identify their facility's pollutant sources and implement corrective actions and revise BMPs as necessary (Section XI.A.4 of this General Permit).

This General Permit requires a combination of visual observations and analytical monitoring. Visual observations provide Dischargers with immediate information

indicating the presence of many pollutants and their sources. Dischargers must implement timely actions and revise BMPs as necessary (Section XI.A.4) when the visual observations indicate pollutant sources have not been adequately addressed in the SWPPP. Analytical monitoring provides an additional indication of the presence and concentrations of pollutants in storm water discharge. Dischargers are required to evaluate potential pollutant sources and corresponding BMPs and revise the SWPPP appropriately when specific types of NAL exceedances occur as described below.

FIGURE 3: Compliance Determination Flowchart

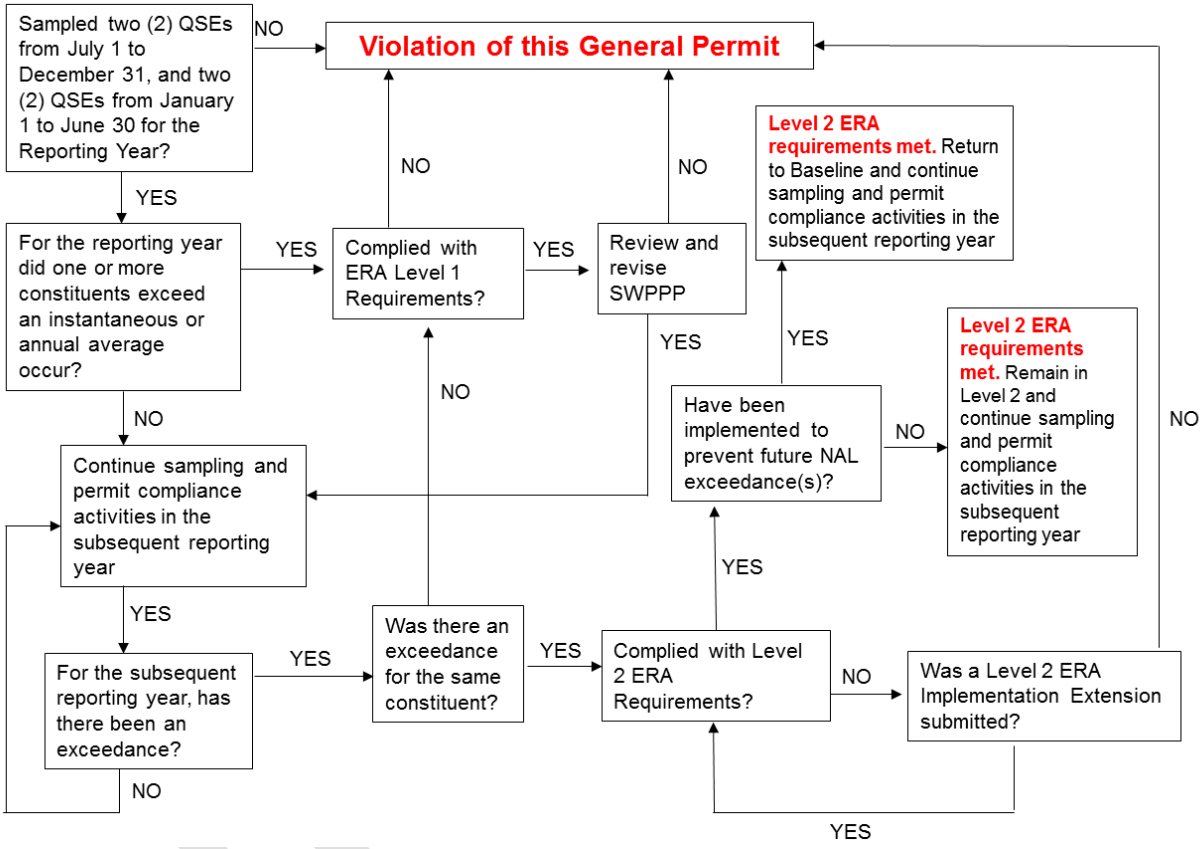

2. Visual Observations

There are two major changes to the visual observation requirements in this General Permit compared to the previous permit, which include:

a. Monthly Visual Observations

The previous permit required separate quarterly visual observations for unauthorized and authorized non-storm water discharges. It did not require periodic visual observations of the facility to determine whether all potential pollutant sources were being adequately controlled with BMPs. Prior drafts of this General Permit proposed the addition of pre-storm inspections. This was met with great resistance by Dischargers because of the complexity and burden of determining when a QSE would occur. Many of these Dischargers

recommended that monthly BMP and non-storm water discharge visual observations should replace the proposed pre-storm inspections. This General Permit merges all visual observations into a single monthly visual observation.

b. Sampling Event Visual Observations

The previous permit required monthly storm water visual observations. This required Dischargers to conduct visual observations for QSEs that were not being sampled since only two QSEs were required to be sampled in the previous permit. As discussed below, the sampling requirement has been increased to four QSEs within each reporting year with two QSEs required in each half of the reporting year. We expect that this will result in more samples being collected and analyzed, since most of California experiences, on average, at least two QSEs per half year. This General Permit streamlines the storm water visual observation requirement by linking the visual observations to the time of sampling.

3. Sampling and Analysis

a. General

As part of the process for developing previous drafts of this General Permit, the State Water Board considered comments from numerous stakeholders concerning sampling and analysis. Sampling and analysis issues were the most dominant of all issues raised in the comments.

The State Water Board received stakeholder comments that fall into three primary categories concerning this General Permit's sampling and analysis approach:

i. Comments supporting an intensive water quality sampling and analysis approach (with the goal of producing more accurate discharge-characterizing and pollutant concentration data) as the primary method of determining compliance with effluent limitations and receiving water limitations. Since this approach requires large amounts of high quality data to accurately quantify the characteristics of the discharges, it is referred to as the quantitative monitoring approach. Stakeholders supporting the quantitative approach generally also support the use of stringent NELs to evaluate compliance with this General Permit;

ii. Comments supporting only visual observations as the primary method of determining compliance: These stakeholders generally assert that storm water sampling is an incomplete and not very cost effective means of determining water quality impacts on the receiving waters; and,

iii. Comments supporting a combination of visual observations and cost-effective water quality sampling and analysis approach (sampling and analysis that would produce data indicating the presence of pollutants) to determine compliance (similar to the previous permit's approach). Since this approach

uses more qualitative information to describe the quality and characteristics of the discharges, it is referred to as the qualitative monitoring approach.

Within each of the three categories, there are various recommendations and rationales as to the exact monitoring frequencies, procedures and methods, required to implement the approach. Stakeholders in favor of the quantitative monitoring approach commented that it is the only reliable and meaningful method of assuring that: (1) BMPs are effective in reducing or preventing pollutants in storm water discharge in compliance with BAT/BCT, and (2) the discharge is not causing or contributing to an exceedance of a water quality standards. The stakeholders state that visual observations are not effective in measuring pollutant concentrations nor is it effective in determining the presence of colorless and/or odorless pollutants. The stakeholders state that qualitative monitoring (and the use of indicator parameters) will not provide results useful for calculating pollutant loading nor will it accurately characterize the discharge.

Stakeholders in favor of requiring only visual observations state that sampling and analysis is unnecessary because (1) the previous permit did not include NELs so the usefulness of sampling and analysis data is limited, (2) a significant majority of Dischargers should be able to develop appropriate BMPs without sampling and analysis data, (3) most pollutant sources and pollutants can be detected and mitigated through visual observations, (4) the costs associated with quantitative monitoring are excessive and disproportionate to any benefits, (5) U.S. EPA's storm water regulations do not require sampling, (6) The 2008 MSGP relies heavily on visual observations and requires only a limited number of specific industries to conduct sampling and analysis, and (7) the majority of Dischargers are small businesses and do not have sufficient training or understanding to perform accurate sampling and analysis.

Stakeholders in favor of requiring both visual observations and a cost-effective qualitative monitoring program state that (1) both are within the means and understanding of most Dischargers, and (2) monitoring results are useful for evaluating a Discharger's compliance without unnecessarily increasing the burden on the Discharger and without subjecting Dischargers to non-technical enforcement actions.

The State Water Board finds that it is feasible for the majority of Dischargers to develop appropriate BMPs without having to perform large amounts of quantitative monitoring, which can be very costly. In the absence of implementing NELs, the State Water Board has determined that the infeasibility and costs associated with developing quantitative monitoring programs at each of thousands industrial facilities currently permitted would outweigh the limited benefits. The primary difficulty associated with requiring intensive quantitative monitoring lies with the cost and the difficulty of accurately sampling industrial storm water discharges.

Stakeholders that support quantitative monitoring believe the data is necessary to determine pollutant loading, concentration, or contribution to water quality violations. In order to derive data necessary to support those goals, however,

the data must be of high quality, meaning it must be accurate, precise and have an intact chain of custody. Many industrial facilities do not have well-defined storm water conveyance systems for sample collection. Storm water frequently discharges from multiple locations through sheet flow into nearby streets and adjoining properties. Sample collection from a portion of the sheet flow is an inexact measurement since not all of the flow is sampled. Requiring every Discharger to construct well-defined storm water conveyances may cost anywhere from thousands to hundreds of thousands of dollars per facility depending on the size and nature of each industrial facility. At many facilities, the construction of such conveyances may also violate local building codes, create safety hazards, cause flooding, or increase erosion. In addition, eliminating sheet flow at some facilities could result in increased pollutant concentrations.

The State Water Board has considered the complexity and costs associated with quantitative monitoring. Unlike continuous point source discharges (e.g., publicly owned treatment works), storm water discharges are variable in intensity and duration. The concentration of pollutants discharged at any one time is dependent on many complex variables. The largest concentration of pollutants would be expected to discharge earlier in the storm event and taper off as discharges continue. Therefore, effective quantitative monitoring of storm water discharges would require that storm water discharges be collected and sampled until most or all of the pollutants have been discharged. Multiple samples would need to be collected over many hours. To determine the pollutant mass loading, the storm water discharge flow must also be measured each time a sample is collected.

For a quantitative monitoring approach to yield useful pollutant loading information, the installation of automatic sampling devices and flow meters at each discharge location would usually be necessary. In addition, qualified individuals would be needed to conduct the monitoring procedures, and to handle and maintain flow meters and automatic samplers are needed. A significant majority of storm water Dischargers under this General Permit do not possess the skills to manage such an effort. Dischargers will bear the cost of employing and/or training on-site staff to do this work, or the cost of contracting with environmental consultants and acquiring the required flow meters and automatic samplers. The cost to Dischargers to conduct quantitative monitoring varies depending on the number of outfalls, the number of storms, the length of each storm, the amount of staff training, and other variables.

To address these concerns, this General Permit includes a number of new items that bridge the gap between the previous permit's qualitative monitoring and the quantitative approach recommended by many commenters. This General Permit includes a requirement for all Dischargers to designate a QISP when they enter Level 1 status due to NAL exceedances. The QISP is required to be trained to: (1) more accurately identify discharge locations representative of the facility storm water discharge (2) select and implement appropriate sampling procedures (3) evaluate and develop additional BMPs to reduce or prevent pollutants in the industrial storm water discharges.

Dischargers that fail to develop and implement an adequate Monitoring Implementation Plan that includes both visual observations and sampling and analysis, are in violation of this General Permit. Dischargers that fail to comply with Level 1 status and Level 2 status ERA requirements, triggered by NAL exceedances, are in violation of this General Permit.

Water Code section 13383.5 requires that the State Water Board include (1) standardized methods for collection of storm water samples, (2) standardized methods for analysis of storm water samples, (3) a requirement that every sample analysis be completed by a State certified laboratory or in the field in accordance with Quality Assurance and Quality Control (QA/QC) protocols, (4) a standardized reporting format, (5) standardized sampling and analysis programs for QA/QC, and (6) minimum detection limits. The monitoring requirements in this General Permit (Section XI), as supplemented by SMARTS, address these requirements.

Under the previous permit, many Dischargers did not developed adequate sample collection and handling procedures, decreasing the quality of analytical results. In addition, Dischargers often selected inappropriate test methods, method detection limits, or reporting units. This General Permit requires all Dischargers to identify discharge locations that are representative of industrial storm water discharges and develop and implement reasonable sampling procedures to ensure that samples are not mishandled or contaminated.

It is infeasible for the State Water Board to provide a single comprehensive set of sample collection and handling procedures/instructions due to the wide variation in storm water conveyance and collection systems in use at facilities around the state. As an alternative, Attachment H of this General Permit provides minimum storm water sample collection and handling instructions that pertain to all facilities. Dischargers are required to develop facility-specific sample collection and handling procedures based upon these minimum requirements. Table 2 in this General Permit provides the minimum test methods that shall be used for a variety of common pollutants. Dischargers must be aware that use of more sensitive test methods (e.g., U.S. EPA Method 1631 for Mercury) may be necessary if they discharge to an impaired water body or are otherwise required to do so by the Regional Water Board. This General Permit allows Dischargers to propose an analytical test method for any parameter or pollutant that does not have an analytical test method specified in Table 2 or in SMARTS. Dischargers may also propose analytical test methods with substantially similar or more stringent method detection limits than existing approved analytical test methods. Upon approval, SMARTS will be updated over time to add additional acceptable analytical test methods.

The previous permit allowed Dischargers to reduce sampling analysis requirements for substantially similar drainage areas by either (1) combining samples for an unspecified maximum number of substantially similar drainage areas, or (2) sampling a reduced number of substantially similar drainage areas. The State Water Board provided this procedure to reduce analytical costs. The complexity associated with determining substantially similar drainage areas has

led Dischargers to produce various, and sometimes questionable, analytical schemes. In addition, the previous permit did not establish a maximum number of samples that could be combined.

To standardize sample collection and analysis as required by Water Code section 13383.5, while continuing to offer a reduced analytic cost option, these requirements have been revised. Section XI.B.4 of this General Permit requires Dischargers to collect samples from all discharge locations regardless of whether the discharges are substantially similar or not. Dischargers may analyze each sample collected, or may analyze a combined sample consisting of equal volumes, collected from as many as four (4) substantially similar discharge locations. A minimum of one combined sample shall be analyzed for every one (1) to four (4) discharge locations, and the samples shall be combined in the lab in accordance with Section XI.C.5 of this General Permit.

Representative sampling is only allowed for sheet flow discharges or discharges from drainage areas with multiple discharge locations. Dischargers shall select the appropriate location(s) to be sampled and intervals necessary to obtain samples representative of storm water associated with industrial activities generated within the corresponding drainage area. Dischargers are not required to sample discharge locations that have no exposure of industrial activities or materials as defined in Section XVII of this General Permit within the corresponding drainage area. However, Dischargers are required to conduct the monthly visual observations regardless of the selected locations to be sampled.

This General Permit defines a QSE as a precipitation event that produces a discharge from any drainage area that is preceded by 48 consecutive hours without a discharge from any drainage area. The previous permit did not include a QSE definition; instead, it utilized a different approach to defining the storm events that were required to be sampled. Under the previous permit, eligible storm events were storm events that occurred after three consecutive working days of dry weather. The three consecutive working days of dry weather definition in the previous permit led Dischargers to miss many opportunities to sample. Some Dischargers were unable to collect samples from two storm events in certain years under the previous definition. To resolve this difficulty, this General Permit increases the sampling requirements to four (4) QSEs per year, while decreasing the number of days without a discharge, resulting in additional opportunities for Dischargers to sample. Additionally, by eliminating the previous permit's reference to "dry weather," this General Permit allows some precipitation to occur between QSEs so long as there is no discharge from any drainage area. This change will result in more QSE sampling opportunities.

To improve clarity and consistency, the definitions contained in other storm water permits were considered with the goal of developing a standard definition for 'dry weather' for this General Permit. The 2008 MSGP sets a "measurable storm event" as one that produces at least 0.1 inches of precipitation and results in an actual discharge after 72 hours (three days) of dry weather. The State of Washington defines a "qualifying storm event" as a storm with at least 0.1 inches of precipitation preceded by at least 24 hours of no measurable precipitation,

mirroring the definition found in the previous MSGP (2000 version). The State of Oregon requires that samples be taken in the first 12 hours of discharge and no less than 14 days apart. Review of other permits concludes that there is not a single commonly used approach to triggering sampling in industrial general permits. Therefore an enforceable sampling trigger is included in this General permit that requires Dischargers to sample four storm events within each reporting year.

b. Effluent Water Quality Sampling and Analysis Parameters

Dischargers are required to sample and analyze their effluent for certain parameters. "Parameter" is a term used in laboratory analysis circles to represent a distinct, reportable measure of a particular type. For example, ammonia, hexavalent chromium, total nitrogen and chemical oxygen demand are all parameters that a laboratory can analyze storm water effluent for and report a quantity back. A parameter is also an indicator of pollution. In this General Permit, pH, total suspended solids and chemical oxygen demand are examples of indicator parameters. They are not direct measures of a water quality problem or condition of pollution but can be used to indicate a problem or condition of pollution. Indicator parameters can also be used to indicate practices and/or the presence of materials at a facility to bring forth information for compliance evaluation processes, like annual report review and inspection. For example, chemical oxygen demand concentrations can indicate the presence of dissolved organic compounds, like residual food from collected recycling materials.

Minimum parameter-specific monitoring is required for Dischargers, regardless of whether additional facility-specific parameters are selected. This General Permit requires some parameters to be analyzed and reported for the duration of permit coverage to develop comparable sampling data over time and over many storm events and to demonstrate compliance. The Regional Water Boards may use such data to evaluate individual facility compliance and assess the differences between various industries. Accordingly, the parameters selected correspond to a broad range of industrial facilities, are inexpensive to sample and analyze, and have sampling and analysis methods which are easy to understand and implement. Some analytical methods for field measurements of some parameters, such as pH, may be performed using relatively inexpensive field instruments and provides an immediate alert to possible pollutant sources.

The following three selected minimum parameters are considered indicator parameters, regardless of facility type. These parameters typically provide indication and/or the correlation of whether other pollutants are present in storm water discharge. These parameters were selected for the following reasons:

i. pH is a numeric measurement of the hydrogen-ion concentration. Many industrial facilities handle materials that can affect pH. A sample is considered to have a neutral pH if it has a value of 7. At values less than 7, water is considered acidic; above 7 it is considered alkaline or basic. Pure rain water in California typically has a pH value of approximately 7.

ii. Total Suspended Solids (TSS) is an indicator of the un-dissolved solids that are present in storm water discharge. Sources of TSS include sediment from erosion, and dirt from impervious (i.e., paved) areas. Many pollutants adhere to sediment particles; therefore, reducing sediment will reduce the amount of these pollutants in storm water discharge.

iii. Oil and Grease (O&G) is a measure of the amount of O&G present in storm water discharge. At very low concentrations, O&G can cause sheen on the surface of water. O&G can adversely affect aquatic life, create unsightly floating material, and make water undrinkable. Sources of O&G include, but are not limited to, maintenance shops, vehicles, machines and roadways.

The previous permit allowed Dischargers to analyze samples for either O&G or Total Organic Carbon (TOC). This General Permit requires all Dischargers analyze samples for O&G since almost all Dischargers with outdoor activities operate equipment and vehicles can potentially generate insoluble oils and greases. Dischargers with water soluble-based organic oils may be required to also test for TOC. The TOC and O&G tests are not synonymous, duplicative or interchangeable.

This General Permit removes the requirement to analyze for specific conductance as part of the minimum analytic parameters. Specific conductance is not required by U.S. EPA for any industry type. Additionally, stakeholder comments indicate that there are many non-industrial sources that may cause high specific conductance and interfere with the efficacy of the test. For example, salty air deposition that occurs at facilities in coastal areas may raise the specific conductance in water over 500 micro-ohms per centimeter (µhos/cm). Dischargers are not prevented from performing a specific conductance test as a screening tool if it is useful to detect a particular pollutant of concern as required (e.g. salinity).
This General Permit requires Dischargers subject to Subchapter N ELGs for pH to analyze for pH using approved test methods in accordance with 40 Code of Federal Regulations part 136. These federal regulations specify that analysis of pH must take place within 15 minutes of sample collection. All other Dischargers may screen for pH using wide range litmus pH paper or other equivalent pH test kits within 15 minutes of sample collection. If in any reporting year a Discharger has two or more pH results outside of the range of 6.0 – 9.0 pH units, that Discharger is required to comply with the approved test methods in 40 Code of Federal Regulations part 136 in subsequent reporting years.

For almost all Dischargers, obtaining laboratory analysis within 15 minutes is logistically impossible. For many Dischargers, maintaining a calibrated pH meter is difficult, labor intensive, and error prone. Screening for pH will limit the number of additional Dischargers required to comply with 40 Code of Federal Regulations part 136 methods to those that have pH measures outside the range of 6.0-9.0 pH units. The use of wide range litmus pH paper or other equivalent pH test kits is not as accurate as a calibrated pH meter, however litmus paper is allowed in the 2008 MSGP, and when used properly it can provide an accurate screening

measure to determine if further more-accurate pH sampling is necessary to determine compliance.

Review of available monitoring data shows that storm water discharges from most types of industrial facilities comply with the pH range of 6.0 to 9.0 pH units. There are specific types of industries, like cement or concrete manufacturers that have shown a trend of higher pH values very close to 9.0 pH units. Rather than require all industries as a whole to monitor with the more costly 40 Code of Federal Regulations part 136 methods, this General Permit establishes a triggering mechanism for these more advanced pH test methods. The Regional Water Boards retain their authority to require more accurate test methods. Once a Discharger triggers the requirement to use the more accurate testing methods in 40 Code of Federal Regulations part 136, the Discharger may not revert back to screening for pH for the duration of coverage under this General Permit.

In the early 1990s, U.S. EPA, through its group application program, evaluated nationwide monitoring data and developed the listed parameters and SIC associations shown in Table 1 of this General Permit. The 2008 MSGP requires that Dischargers analyze storm water effluent for the listed parameters under certain conditions. In addition to the parameters in Table 1 of this General Permit, Dischargers are required to select additional facility-specific analytical parameters to be monitored, based upon the types of materials that are both exposed to and mobilized by contact with storm water. Dischargers must, at a minimum, understand how to identify industrial materials that are handled outdoors and which of those materials can easily dissolve or be otherwise transported via storm water.

The Regional Water Boards have the authority to revise the monitoring requirements for an individual facility or group of facilities based on site-specific factors including geographic location, industry type, and potential to pollute. For example, the Los Angeles Regional Water Board required all dismantlers (SIC Code 5015) within their jurisdiction to monitor for copper and zinc instead of aluminum and iron during the term of the previous permit. SMARTS will be programmed to incorporate any monitoring revisions required by the Regional Water Boards. Dischargers will receive email notification of the monitoring requirement revision and their SMARTS analytical reporting input screen will display the corresponding revisions. Dischargers may add, but not otherwise modify, the sampling parameters on their SMARTS input screen.

Dischargers are also required to identify pollutants that may cause or contribute to an existing exceedance of any applicable water quality standards for the receiving water. This General Permit requires Dischargers to control its discharge as necessary to meet the receiving water limitations, and to select additional monitoring parameters that are representative of industrial materials handled at the facility (regardless of the degree of storm water contact or relative mobility) that may be related to pollutants causing a water body to be impaired.

DRAFT

4. Methods and Exceptions

   a. Storm Water Discharge Locations

      Dischargers are required to visually observe and collect samples of industrial storm water discharges from each drainage area at all discharge locations. These samples must be representative of the storm water discharge leaving each drainage area. This is a change from the previous permit which allowed a Discharger to reduce the number of discharge locations sampled if two or more discharge locations were substantially similar.

      Dischargers are required to identify, when practicable, alternate discharge locations if: (1) the facility's industrial drainage areas are affected by storm water run-on from surrounding areas that cannot be controlled, or (2) discharge locations are difficult to observe or sample (e.g. submerged discharge outlets, dangerous discharge location accessibility).

   b. Representative Sampling Reduction

      Some stakeholders have indicated that there are unique circumstances where sampling a subset of representative discharge locations fully characterizes the full set of storm water discharges. Stakeholders provided examples related to drainage areas with multiple discharge locations where sampling only a subset of these discharge locations produces results that are representative of the drainage areas' storm water discharges. In such situations, this General Permit allows Dischargers to reduce the number of discharge locations. For each drainage area with multiple discharge locations (e.g. roofs with multiple downspouts, loading/unloading areas with multiple storm drain inlets), the Discharger may reduce the number of discharge locations to be sampled if the conditions in Section XI.C.4 of this General Permit are met.

   c. Qualified Combined Samples

      Dischargers may combine samples from up to four (4) discharge locations if the industrial activities within each drainage area and each drainage area's physical characteristics (i.e. grade, surface materials) are substantially similar.

      Dischargers are required to provide documentation in the Monitoring Implementation Plan supporting that the above conditions have been evaluated and fulfilled. A Discharger may combine samples from more than four (4) discharge locations only with approval from the appropriate Regional Water Board.

   d. Sample Collection and Visual Observation Exceptions

      Dischargers are not required to collect samples or conduct visual observations during dangerous weather conditions such as flooding or electrical storms, or outside of scheduled facility operating hours. A Discharger is not precluded from conducting sample collection activities or visual observations outside of scheduled facility operating hours.

In the event that a Discharger is unable to collect the required samples or conduct visual observations due to the above exceptions, the Discharger must include an explanation of the conditions obstructing safe monitoring in its Annual Report. If access to a discharge location is dangerous on a routine basis, a Discharger must choose an alternative discharge location in accordance with General Permit Section XI.C.3.

e. Sampling Frequency Reduction

Facilities that do not have NAL exceedances for four (4) consecutive QSEs are unlikely to pose a significant threat to water quality. If the storm water from these facilities is also in full compliance with this General Permit, the Discharger is eligible for a reduction in sampling frequency. The Sampling Frequency Reduction allows a Discharger to decrease its monitoring from four (4) samples within each reporting year to one (1) QSE within the first half of each reporting year (July 1 to December 31) and one (1) QSE within the second half of each reporting year (January 1 to June 30). If a Discharger has a subsequent NAL exceedance after the Sampling Frequency Reduction, it must comply with the original sampling requirements of this General Permit. Only Dischargers that have baseline status or that have satisfied the Level 1 requirements are eligible for this sampling and analysis reduction.

A Discharger requesting to reduce its sampling frequency shall certify and submit a Sampling Frequency Reduction certification via SMARTS. The Sampling Frequency Reduction certification shall include documentation that the General Permit conditions for the Sampling Frequency Reduction have been satisfied.

Dischargers participating in a Compliance Group and certifying a Sampling Frequency Reduction are only required to collect and analyze storm water samples from one (1) QSE within each reporting year. These Dischargers must receive year-round compliance assistance from their Compliance Group Leader and must comply with all requirements of this General Permit.

5. Facilities Subject to Federal Storm Water Effluent Limitation Guidelines (ELGs)

Federal regulations at Subchapter N establish ELGs for industrial storm water discharges from facilities in eleven industrial sectors. For these facilities, compliance with the ELGs constitutes compliance with the technology standard of BPT, BAT, BCT, or New Source Performance Standards provided in the ELG for the specified pollutants, and compliance with the technology-based requirements in this General Permit for the specified pollutant.

K. Exceedance Response Actions (ERAs)

1. General

The previous permit did not incorporate the benchmarks from any of the MSGPs or NALs for Dischargers to evaluate sampling results. Unlike the requirements for industrial storm water discharges that cause or contribute to an exceedance of a

water quality standards, the previous permit did not provide definitions, procedures or guidelines to assess sampling results. Many Regional Water Boards have formally or informally notified Dischargers that exceedances of the MSGP benchmarks should be used to determine whether additional BMPs are necessary. However, there was considerable confusion as to the extent to which a Discharger would be expected to implement actions in response to exceedances of these values, and the timelines that had to be met to prevent an enforcement action. The lack of specificity with regards to what constituted an exceedance, and what actions are required in response to an exceedance, have been identified as a problem by the Water Boards, industry and environmental stakeholders.

This General Permit contains two (2) types of NALs. Annual NALs function similarly to, and are based upon, the values provided in the 2008 MSGP. Instantaneous maximum NALs target hot spots or episodic discharges of pollutants and are established based on California industrial storm water discharge monitoring data. When a Discharger exceeds an NAL it is required to perform ERAs. The ERAs are divided into two levels of responses and can generally be differentiated by the number of years in which a facility's discharge exceeds an NAL trigger. These two levels are explained further in Section XII of this General Permit. This ERA process provides Dischargers with an adaptive management-based process to develop and implement cost-effective BMPs that are protective of water quality and compliant with this General Permit. This process is also designed to provide Dischargers with a more defined pathway towards full compliance.

The ERA requirements in this General Permit were developed using best professional judgment and Water Board experience with the shortcomings of the previous permit's compliance procedures. Public comments received during State Water Board hearings on the 2002, 2005, 2011, 2012 and 2013 draft permits, and NPDES industrial storm water discharge permits from other states with well-defined ERA requirements were also considered by the State Water Board.

The State Water Board presumes that one single NAL exceedance for a particular parameter is not a clear indicator that a facility's discharge is out of compliance with the technology-based effluent limitations or receiving water limitations. This presumption recognizes the highly variable nature of storm water discharge and the limited value of a single quarterly grab sample to represent the quality of a facility's storm water discharge for an entire storm event and all other non-sampled storm events. With this presumption, the State Water Board is addressing costly monitoring requirements that do not bring forth valuable compliance and/or water quality information.

2. NALs and NAL Exceedances

   a. This General Permit contains two types of NAL exceedances as follows:

      Annual NAL exceedance - the Discharger is required to calculate the average annual concentration for each parameter using the results of all sampling and analytical results for the entire facility for the reporting year (i.e., all "effluent" data), and compare the annual average concentration to the corresponding Annual NAL values in Table 2 of this General Permit. An

annual NAL exceedance occurs when the annual average of all the sampling results for a parameter taken within a reporting year exceeds the annual NAL value for that parameter listed in Table 2 of this General Permit.

For the purposes of calculating the annual average concentration for each parameter, this General Permit considers any sampling result that are a "non-detect" or less than the method detection limit as a zero (0) value. The reason to use zero (0) values instead of the detected but not quantifiable value (minimum level or reporting limit) is that these values are very low and are unlikely to contribute to an NAL exceedance. There are statistical methods to include low values when calculations are for numeric criteria and limitations, however, the NALs in this General Permit are approximate values used to provide feedback to the Discharger on site performance, and are not numeric criteria or limitations. Therefore, it is not necessary to include these insignificant values in the calculations for the NALs. For Dischargers using composite sampling or flow measurement in accordance with standard practices, the average concentrations shall be calculated in accordance with the U.S. EPA Guidance Manual for the Monitoring and Reporting Requirements of the NPDES Multi-Sector Storm Water General Permit.[12]

i. Instantaneous maximum NAL exceedance - the Discharger is required to compare all sampling and analytical results from each distinct sample (individual or combined) to the corresponding instantaneous maximum NAL values in Table 2 of this General Permit. An instantaneous maximum NAL exceedance occurs when two or more analytical results from samples taken for any parameter within a reporting year exceed the instantaneous maximum NAL value (for TSS and O&G), or are outside of the instantaneous maximum NAL range (for pH).

b. Instantaneous maximum NAL analysis

In its June 19, 2006 report, the Blue Ribbon Panel of Experts (Panel) made several specific recommendations for how to set numeric limitations in future industrial storm water general permit(s). For sites not subject to TMDLs, the Panel suggested that the numeric values be based upon industry types or categories, with the recognition that each industry has its own specific water quality issues and financial viability. Furthermore, the Panel concluded:

> To establish Numeric Limits for industrial sites requires a reliable database, describing current emissions by industry types or categories, and performance of existing BMPs. The current industrial permit has not produced such a database for most industrial categories because of inconsistencies in monitoring or compliance with monitoring requirements. The Board needs to reexamine the existing data sources, collect new data as required and for additional water quality parameters (the current permit requires only pH, conductivity, total suspended solids,

[12] U.S. EPA. NPDES Storm Water Sampling Guidance Document. Web. July 1992. <http://www.epa.gov/npdes/pubs/owm0093.pdf>. [as of February 4, 2014].

> and either total organic carbon or oil and grease) to establish practical and achievable Numeric Limits.

The Panel suggested an alternative method that would allow the use of the existing Water Board dataset to establish action levels, referred to as the "ranked percentile" method. The Panel recommended:

> The ranked percentile approach (also a statistical approach) relies on the average cumulative distribution of water quality data for each constituent developed from many water quality samples taken for many events at many locations. The Action Level would then be defined as those concentrations that consistently exceed some percentage of all water quality events (i.e. the 90th percentile). In this case, action would be required at those locations that were consistently in the outer limit (i.e. uppermost 10th percentile) of the distribution of observed effluent qualities from urban runoff.

After performing various data analysis exercises with the Water Board dataset, State Water Board staff concluded that the Water Board dataset is not adequate to calculate instantaneous NAL values using the Panel's recommended method for all of parameters that have annual NAL values based on the U.S. EPA benchmarks. Additionally, public comments on the January 2011 draft of this General Permit suggest that it is problematic to calculate NAL values based on the existing data. Therefore, the Water Board dataset was not used to calculate instantaneous NAL values for all parameters.

However, since all Dischargers regulated under the previous permit were required to sample for TSS and O&G/TOC , State Water Board staff found that the existing dataset for these parameters is of sufficient quality to calculate instantaneous NAL values. State Water Board staff also found that this data was less prone to what appear to be data input errors. The final dataset used to calculate the instantaneous NALs in this General Permit had outlier values that were eliminated from the dataset by using approved test method detection limits ranges. The methods and corresponding method detection limit ranges used to screen outliers are as follows:

- O&G - EPA 413.1 Applicable Range: 5-1,000 mg/L
- O&G - EPA 1664 Applicable Range: 5-1,000 mg/L
- TSS - EPA 160.2 Applicable Range: 4-20,000 mg/L

The intent of the instantaneous maximum NAL is to identify specific drainage areas of concern or episodic sources of pollution in industrial storm water that may indicate inadequate storm water controls and/or water quality impacts. In the effort to add instantaneous NAL exceedances to the ERA process, the State Water Board explored different options for the development of an appropriate value (i.e. percentile approach, benchmarks times a multiplier, confidence intervals). The California Stormwater Quality Association's comments on the previous draft permit included a proposed method for calculating NAL values

using a percentile approach. The State Water Board researched and evaluated this methodology and determined it is the most appropriate way to directly compare available electronic sampling data from Dischargers regulated under the previous permit. This percentile approach was used to establish the instantaneous maximum NALs in this General Permit, for discharges to directly compare with sampling results and identify drainage areas of water quality concern.

The percentile approach is a non-parametric approach identified in many statistical textbooks for determining highly suspect values. Highly suspect values are defined as values that exceed the limits of the outer fences of a box plot. Upper limits of the outer fence are calculated by adding three times the inter-quartile range (25th to 75th percentiles) to the upper-end of the inter-quartile range (the 75th percentile). The California Stormwater Quality Association calculated an NAL value of 401 mg/L for TSS using the percentile approach using the Water Board dataset. The State Water Board performed the same analysis with the same Water Board dataset and calculated a slightly different value of 396 mg/L; therefore, the instantaneous maximum NAL value for TSS of 400 mg/L was established. Appling the percentile approach to the existing O&G data results in the instantaneous maximum NAL value for O&G of 25 mg/L.

The State Water Board compared existing sampling data to the instantaneous maximum NAL values and concluded that seven (7) percent of the total samples exceeded the highly suspected value for TSS and 7.8 percent of the total samples exceeded the highly suspected value for O&G. These results suggest that the instantaneous maximum NAL values are adequate to identify drainage areas of concern statewide since they are not regularly exceeded. Using best professional judgment, the State Water Board concludes that an exceedance of these values twice within a reporting year is unlikely to be the result of storm event variability or random BMP implementation problems, and the use of the percentile approach is therefore appropriate.

Due to issues with the ranges of concentrations and the logarithmic nature of pH, statistical methods cannot be applied to pH in the same ways as other parameters. Review of storm water sampling data by the State Water Board and other stakeholders has shown that pH is not typically a parameter of concern for most industrial facilities. Accordingly, a range of pH limits established in Regional Water Board Basin Plans is implemented in this General Permit for the instantaneous maximum NAL values. Most Basin Plans set a water quality objective of 6.0 - 9.0 pH units for water bodies, an exceedance outside the range of 6.0 - 9.0 pH units is consistent with the water quality concerns for pH among Regional Water Boards. An industrial facility with proper BMP implementation is expected to have industrial storm water discharges within the range of 6.0 - 9.0 pH units.

High concentrations of TSS and O&G, or pH values outside the range of 6.0 – 9.0 pH units, in a discharge may be an indicator of potential BMP implementation or receiving water quality concerns with other pollutants with parameters that do not have an instantaneous maximum NAL value. The State Water Board may

consider instantaneous maximum NAL values for other parameters in a subsequent reissuance of this General Permit, based on data collected during this General Permit term.

The percentile approach is considered by many stakeholders to be the best method to evaluate BMP performance and general effluent quality in a community or population where the vast majority of the industrial facilities are implementing sufficient pollutant control measures. The Water Board's current dataset does not provide a way of evaluating actual BMP implementation at each facility when analyzing the data; therefore the monitoring information reported during the previous permit term cannot be linked to compliance with technology-based standards. The State Water Board intends to use data collected during this General Permit term to evaluate the percentile approach, improve the quality of collected data for other parameters, and further develop an understanding of how reported data relates to implemented BMP-control technologies.

Under this General Permit, a Discharger enters Level 1 status and must fulfill the Level 1 status ERA requirements following its first occurrence of any NAL exceedance. Level 2 status ERA requirements follow the second occurrence of an NAL exceedance for the same parameter in a subsequent reporting year. This ERA process provides Dischargers with an adaptive management-based process to develop and implement cost-effective BMPs that are protective of water quality and compliant with this General Permit. This General Permit's ERA process is designed to have a well-defined compliance end-point. It is not a violation of this General Permit to exceed the NAL values; it is a violation of the permit, however, to fail to comply with the Level 1 status and Level 2 status ERA requirements in the event of NAL exceedances.

The State Water Board acknowledges that storm water discharge concentrations are often highly variable and dependent upon numerous circumstances such as storm size, the time elapsed since the last storm, seasonal activities, and the time of sample collection. Since there are potential enforcement consequences for failure to comply with this General Permit's ERA process, the State Water Board's intention is to use NAL exceedances to solely require Dischargers with recurring annual NAL exceedances or drainage areas that produce recurring instantaneous maximum NAL exceedances to be subject to the follow-up ERA requirements.

If NALs exceedances do not occur, the State Water Board generally expects that the Discharger has implemented sufficient BMPs to control storm water pollution. When NAL exceedances do occur, however, the potential that the Discharger may not have implemented appropriate and/or sufficient BMPs increases, and the Discharger is required to implement escalating levels of ERAs. If NAL exceedances occur, this General Permit requires Dischargers to evaluate and potentially install additional BMPs, or re-evaluate and improve existing BMPs to be in compliance with this General Permit.

3. Baseline Status

At the beginning of a Discharger's NOI coverage under this General Permit, the Discharger has Baseline status. A Discharger demonstrating compliance with all NALs will remain at Baseline status and is not required to complete Level 1 status and Level 2 status ERA requirements.

If a Discharger has returned to Baseline status (from Level 2 status) and additional NAL exceedances occur, the Discharger goes into Level 1 status, then potentially Level 2 status. Dischargers do not go directly into Level 2 status from Baseline status.

4. Level 1 Status

Regardless of when an NAL exceedance occurs during Baseline status, a Discharger's status changes from Baseline status to Level 1 status on July 1 of the subsequent reporting year. By October 1 following the commencement of Level 1 status, the Discharger is required to appoint a QISP to assist with the completion of the Level 1 Evaluation. The Level 1 Evaluation must include a review of the facility's SWPPP for compliance with the effluent and receiving water limitations of this General Permit, an evaluation of the industrial pollutant sources at the facility that are or may be related to the NAL exceedance(s), and identification of any additional BMPs that will eliminate future exceedances. When conducting the Level 1 Evaluation, a Discharger must ensure that all potential pollutant sources that could be causing or contributing to the NAL exceedance(s) are fully characterized, that the current BMPs are adequately described, that employees responsible for implementing BMPs are appropriately trained, and that internal procedures are in place to track that BMPs are being implemented as designed in the SWPPP. A Discharger is additionally required to evaluate the need for additional BMPs. Level 1 ERAs are designed to provide the Discharger the opportunity to improve existing BMPs or add additional BMPs to comply with the requirements of this General Permit.

By January 1 following commencement of Level 1 status, a Discharger is required to certify and submit via SMARTS a Level 1 ERA Report prepared by a QISP. The Level 1 ERA Report must contain a summary of the Level 1 Evaluation, all new or revised BMPs added to the SWPPP.

In most cases, the State Water Board believes that Level 1 status BMPs will be operationally related rather than structural and, therefore can be implemented without delay. Recognizing that a Discharger should not be penalized for sampling results obtained before implementing BMPs, sampling results for parameters and their corresponding drainage areas that caused the NAL exceedance up to October 1 or the date the BMPs were implemented, whichever is sooner, will not be used for calculating NAL exceedances. Although this General Permit allows up to January 1 to implement Level 1 status BMPs, the State Board has chosen an interim date of October 1 to encourage more timely Level 1 BMP implementation. Dischargers who implement Level 1 BMPs after October 1 may risk obtaining subsequent sampling results that may cause them to go into Level 2 status.

5. Level 2 Status

Level 2 ERAs are required during any subsequent reporting year in which the same parameter(s) has an NAL exceedance (annual average or instantaneous maximum), if this occurs, a Discharger's status changes from Level 1 status to Level 2 status on July 1 of the subsequent reporting year. Dischargers with Level 2 status must further evaluate BMP options for their facility. Dischargers may have to implement additional BMPs, which may include physical, structural, or mechanical devices that are intended to prevent pollutants from contacting storm water. Examples of such controls include, but are not limited to:

- Enclosing and/or covering outdoor pollutant sources within a building or under a roofed or tarped outdoor area.

- Physically separating the pollutant sources from contact with run-on of uncontaminated storm water.

- Devices that direct contaminated storm water to appropriate treatment BMPs (e.g., discharge to sanitary sewer as allowed by local sewer authority).

- Treatment BMPs including, but not limited to, detention ponds, oil/water separators, sand filters, sediment removal controls, and constructed wetlands.

Dischargers may select the most cost-effective BMPs to control the discharge of pollutants in industrial storm water discharges. Where appropriate, BMPs can be designed and targeted for various pollutant sources (e.g., providing overhead coverage for one potential pollutant while discharging to a detention basin for another source may be the most cost-effective solution).

a. Level 2 ERA Action Plans

The State Water Board acknowledges that there may be circumstances that make it difficult, if not impossible, for a Discharger to immediately implement additional BMPs. For example, it may take time to get a contract for construction in place, obtain necessary building permits, and design and construct the BMPs. Dischargers may also suspect that pollutants are from a non-industrial or natural background source and need time to study their site. A Discharger is required to certify and submit an Action Plan prepared by a QISP via SMARTS by January 1 following the reporting year in which the NAL exceedance that resulted in the Discharger entering Level 2 occurred. The Level 2 ERA Action Plan requires a Discharger to propose actions necessary to complete the Level 2 ERA Technical Report, the demonstrations the Discharger has selected, and propose a time frame for implementation.

If a Discharger changes the QISP assisting with the Level 2 ERA requirements this General Permit requires the Discharger to update the QISP information via SMARTS. Current information on individuals assisting Dischargers with compliance of this General Permit provides the Water Boards with the necessary contact information if there are questions on the submitted documents, and for possible verification of a QISP's certification.

Dischargers are required to address each Level 2 NAL exceedance in an Action Plan. The State Water Board recognizes that Dischargers with Level 2 status may have multiple parameters or facility areas that have Level 2 NAL exceedances and the timing of the exceedances may make it very difficult to address all Level 2 NAL exceedances in one Action Plan. When Level 2 ERA exceedances occur in subsequent reporting years, after an Action Plan is certified and submitted, a Discharger will need to develop an Action Plan for this new Level 2 NAL exceedance. This General Permit defines new Level 2 NAL exceedances as an exceedance for a new parameter in any drainage area at the facility, or an exceedance for the same parameter being addressed in an existing Action Plan, but where the exceedance occurred in a different drainage area than identified in the existing Action Plan.

b. Level 2 ERA Technical Reports

The Level 2 ERA Technical Report contains three different options that require a Discharger to submit demonstrations showing the cause of the NAL exceedance(s). This General Permit requires a Discharger to appoint a QISP to prepare the Level 2 ERA Technical Reports. The State Water Board acknowledges that there may be cases where a combination of the demonstrations may be appropriate; therefore a Discharger may combine any of the following three demonstration options in their Level 2 ERA Technical Report when appropriate. A Discharger is only required to annually update its Level 2 ERA Technical Report when necessary and is not required to annually re-certify and re-submit the entire Level 2 ERA Technical Report.

i. Industrial Activity BMPs Demonstration

The Industrial Activity BMPs Demonstration is for the following:

- Dischargers who decided to implement additional BMPs that are expected to eliminate future NAL exceedance(s) and that have been implemented in order to achieve compliance with the technology-based effluent limitations of this General Permit, and

- Dischargers who decided to implement additional BMPs that may not eliminate future NAL exceedance(s) and that have been implemented in order to achieve compliance with the technology-based effluent limitations of this General Permit.

When preparing the Industrial Activity BMPs Demonstration, the QISP shall identify and evaluate all individual pollutant source(s) associated with industrial activity that are or may be related to an NAL exceedance and all designed, information on the drainage areas associated with the Level 2 NAL exceedances, and installed BMPs that are implemented to reduce or prevent pollutants in industrial storm water discharges in compliance with this General Permit.

If an Industrial Activity BMPs Demonstration is submitted as the Level 2 ERA Technical Report and the Discharger is able to show reductions in pollutant concentrations below the NALs for four (4) subsequent consecutive QSEs, the Discharger returns to Baseline Status. A Discharger that submits an Industrial Activity BMPs Demonstration but has not installed additional BMPs that are expected to eliminate future NAL exceedance(s) will remain with Level 2 status but is not subject to additional ERAs unless directed by the Regional Water Board.

ii. Non-Industrial Pollutant Source Demonstration

A Non-Industrial Pollutant Source Demonstration is for a Discharger to demonstrate that the pollutants causing the NAL exceedances are not related to industrial activities conducted at the facility, and additional BMPs at the facility will not contribute to the reduction of pollutant concentrations.

Dischargers including the Non-Industrial Pollutant Demonstration in their Level 2 ERA Technical Report shall have a QISP determine that the sources of non-industrial pollutants in storm water discharges are not from industrial activity or natural background sources within the facility.

Sources of non-industrial pollutants that are discharged separately and are not comingled with storm water associated with industrial activity are not considered subject to this General Permit's requirements. When pollutants from non-industrial sources are comingled with storm water associated with industrial activity, the Discharger is responsible for all the pollutants in the combined discharge unless the technical report clearly demonstrates that the NAL exceedances due to the combined discharge are solely attributable to the non-industrial sources. The pollutant may also be present due to industrial activities, in which case the Discharger must demonstrate that the pollutant contribution from the industrial activities by itself does not result in an NAL exceedance. In most cases, the Non-Industrial Pollutant Source Demonstration will contain sampling data and analysis distinguishing the pollutants from non-industrial sources from the pollutants generated by industrial activity.

Once the Level 2 ERA Technical Report, including this demonstration is certified and submitted via SMARTS, the Discharger has satisfied all the requirements necessary for that pollutant for ERA purposes. A Discharger that submits a Non-Industrial Pollutant Demonstration remains with Level 2 status but is not subject to additional ERAs unless directed by the Regional Water Board.

iii. Natural Background Pollutant Source Demonstration

The benchmark monitoring schedule in section 6.2.1.2 of the 2008 MSGP allows a Discharger to determine that the exceedance of the benchmark is attributable solely to the presence of that pollutant in the natural background. A Discharger making this determination is not required to perform corrective

action or additional benchmark monitoring providing that the other 2008 MSGP requirements are met. The 2008 MSGP Fact Sheet requires Dischargers to include in the following in the SWPPP: 1) map(s) showing the reference site location, facility, available land cover information, reference site and test site elevation, available geology and soil information for reference and test sites, photographs showing site vegetation, site reconnaissance survey data and records. This General Permit requires this information to be included in the Natural Background Pollutant Source Demonstration in Section XII.D.2.c.

The Natural Background Pollutant Source Demonstration in this General Permit is for a Discharger that can demonstrate that pollutants causing the NAL exceedances are not related to industrial activities conducted at the facility, and are solely attributable to the presence of those pollutants in natural background. The pollutant may also be present due to industrial activities, in which case the Discharger must demonstrate that the pollutant contribution from the industrial activities by itself does not result in an NAL exceedance. Natural background pollutants include those substances that are naturally occurring in soils or groundwater that have not been disturbed by industrial activities. Natural background pollutants do not include legacy pollutants from earlier activity on a site, or pollutants in run-on from neighboring sources which are not naturally occurring. Dischargers are not required to reduce concentrations for pollutants in the effluent caused by natural background sources if these pollutants concentrations are not increased by industrial activity.

The 2008 MSGP Fact Sheet states that the background concentration of a pollutant in runoff from a non-human impacted reference site in the same watershed must be determined by evaluation of ambient monitoring data or by using information from a peer-reviewed publication or a local, state, or federal government publication specific to runoff or storm water in the immediate region. Studies that are in other geographic areas, or are clearly based on different topographies or soils, are not sufficient to meet this requirement. When such data is not available, and there are no known sources of the pollutant, the background concentration should be assumed to be zero.
In cases where historic monitoring data from a site are used for generating a natural background concentration, and the site is no longer accessible or able to meet reference site acceptability criteria, the Discharger must submit documentation (e.g., historic land use maps) indicating the site did meet reference site criteria (such as indicating the absence of human activity) during the time data collection occurred.

Once the Level 2 ERA Technical Report, including a Natural Background Demonstration meeting the conditions in Section XII.D.2.c of this General Permit is certified and submitted via SMARTS, the Discharger is no longer responsible for the identified background parameters(s) in the corresponding drainage area(s). A Discharger that submits this type of demonstration will

remain with Level 2 status but is not subject to additional ERAs unless directed by the Regional Water Board.

c. Level 2 ERA Implementation Extension

The State Water Board recognizes that there may be circumstances that make implementation of all necessary actions required in the Level 2 ERAs by the permitted due dates infeasible. In such circumstances a Discharger may request additional time by submitting a Level 2 ERA Implementation Extension. The Level 2 ERA Implementation Extension will automatically allow Dischargers up to an additional six (6) months to complete the tasks identified in the Level 2 ERA Action Plans while remaining in compliance with this General Permit. The Level 2 ERA Implementation Extension is subject to Regional Water Board review. If additional time is needed beyond the initial six (6) month extension, a second Level 2 ERA Implementation Extension may be submitted but is not effective unless it is approved by the Water Board.

L. Inactive Mining Operations

Inactive mining sites may need coverage under this General Permit. Inactive mining operations are mining sites, or portions of sites, where mineral mining and/or dressing occurred in the past with an identifiable Discharger (owner or operator), but are no longer actively operating. Inactive mining sites do not include sites where mining claims are being maintained prior to disturbances associated with the extraction, beneficiation, or processing of mined materials. A Discharger has the option to certify and submit via SMARTS that its inactive mining operations meet the conditions for an Inactive Mining Operation Certification in Section XIII of this General Permit. The Discharger must have a SWPPP for an inactive mine signed (wet signature with license number) by a California licensed professional engineer. The Inactive Mining Operation Certification in this General Permit is in lieu of performing certain identified permit requirements. This General Permit requires an annual inspection of an inactive mining site and an annual re-certification of the SWPPP. Any significant updates to the SWPPP shall be signed (wet signature and license number) by a California license professional engineer. The Discharger must certify and submit via SMARTS any significantly revised SWPPP within 30 days of the revision(s)

M. Compliance Groups and Compliance Group Leaders

Group Monitoring, as defined in the previous permit, has been eliminated in this General Permit and replaced with a new compliance option called Compliance Groups. The Compliance Group option differs from Group Monitoring as it requires (1) all Dischargers participating in a Compliance Group (Compliance Group Participants) sample two QSEs each year, (2) the Compliance Group Leader to inspect each Participant's facility within each reporting year, (3) the Compliance Group Leader must complete a State Water Board sponsored or approved training program for Compliance Group Leaders, and (4) the Compliance Group Leader to prepare Consolidated Level 1 ERA Reports, and individual Level 2 ERA Action Plans and Technical Reports. The Compliance Group option is similar to Group Monitoring as it retains a mechanism that

allows Dischargers of the same industry type to comply with this General Permit through shared resources in a cost saving manner.

This General Permit emphasizes sampling and analysis as a means to evaluate BMP performance and overall compliance, and the significantly reduced sampling requirements previously afforded to Group Monitoring Participants (two samples within a five-year period) does not provide the necessary information to achieve these goals. However, a moderate reduction in sampling requirements is included as an incentive for Compliance Group Participants while concurrently requiring sufficient individual facility sampling data to determine compliance. A Compliance Group Leader is required to provide the necessary sampling training and guidance to the Compliance Group Participants. This additional training requirement will increase sampling data quality that will offset the reduced sampling frequency for Compliance Groups.

Participation in Compliance Groups will provide additional cost savings for Dischargers in the preparation of the Consolidated Level 1 ERA Reports, and for Compliance Group Leader assistance in preparing the Level 2 ERA Action Plans and the individual Level 2 ERA Technical Reports. It is likely that many of the pollutant sources causing NAL exceedances, and the corresponding BMP cost evaluation and selection, when appropriate, will overlap for groups of facilities in a similar industry type. When these overlaps occur, a Compliance Group Leader should be able to more efficiently evaluate the pollutant sources and BMP options, and prepare the necessary reports.

The State Water Board believes that it is necessary for Compliance Group Leaders to have a higher level of industrial storm water compliance and training experience than the expectations of a QSIP. Many stakeholder comments on this General Permit suggested various certifications to provide this higher level of experience; however, the State Water Board believes a process similar to the Trainer of Record process for the Construction General Permit training program will develop Compliance Group Leaders with the appropriate level of experience to fulfill the necessary qualifications.

The intent of the Compliance Groups is to have only one or a small number of Compliance Groups per industrial sector. The process for becoming a QISP trainer and/or a Compliance Group Leader is purposely similar to the Construction General Permit trainer of record process for consistency within storm water regulatory leaders. The formal process to qualify to conduct trainings for QISPs and/or to be a Compliance Group Leader will include the submittal of a statement of qualifications for review, a review fee, completion of an exam and training specific to this role. For more information see the Construction General Permit trainer of record process: http://www.casqa.org/TrainingandEducation/ConstructionGeneralPermitTrainingQSDQSPToR/tabid/205/Default.aspx

After the initial Compliance Group registration, Compliance Group Leaders are required to submit and maintain their list of Compliance Group Participants via SMARTS. There are no additional administrative documents required. The previous permit required group leaders to provide annual group evaluation reports and a letter of intent to continue group monitoring. The State Water Board found these items to be resource intensive and placed an unnecessary administrative burden on group leaders. The

Compliance Group requirements in this General Permit reduces the administrative burden on both the Compliance Group Leaders and Water Board staff.

The State Water Board's intent for the effluent data, BMP selection, cost, and performance information, and other industry specific information provided in Compliance Group reports is for evaluation of sector-specific permitting approaches and the use of NALs in the next reissuance of this General Permit.

N. Annual Evaluation

Federal regulations require NPDES industrial storm water Dischargers to evaluate their facility and SWPPP annually. Typically this requires an inspection of the facility to ensure: (1) the SWPPP site map is up to date, (2) control of all potential pollutant sources is included in the SWPPP, and (3) sampling data and visual observation records are used to evaluate if the proper BMPs are being implemented. As Dischargers are required to conduct monthly visual observation that partially overlap with the actions required by the annual evaluation requirements, Dischargers may perform the annual evaluation inspection concurrent with a monthly visual observation.

O. Annual Report

All Dischargers shall certify and submit via SMARTS an Annual Report no later than July 15 following each reporting year. The reporting requirements for this General Permit's Annual Report are streamlined in comparison to the previous permit. The Annual Report now consists of two primary parts: (1) a compliance checklist indicating which permit requirements were completed and which were not (e.g., a Discharger who completes the required sampling of four QSEs during the reporting year, versus a Discharger who is only able to sample two QSEs during the reporting year), and (2) an explanation for items on the compliance checklist that were determined incomplete by the Discharger. Unlike the previous permit, the Annual Report does not require Dischargers to provide the details of each visual observation (such as name of observer, time of observation, observation summary, corrective actions, etc.) or provide the details of the Annual Comprehensive Site Evaluation. Dischargers, however, continue to be required to retain those records and have them available upon request. The Annual Report is further simplified through the immediate electronic reporting via SMARTS of sampling data and copies of the original laboratory reports instead of such information being included in the Annual Report.

P. Conditional Exclusion - No Exposure Certification (NEC) Requirements

This General Permit's conditional exclusion requirements are similar to the requirements provided in 40 C.F.R. section 122.26(g)(3). Clarifications were added in this General Permit, however, to the types of "storm resistant shelters" and the periods when "temporary shelters" may be used in order to avert regulatory confusion. California does not have operating coal power plants, which are a major contributor to acid rain elsewhere in the United States. California does have nonpoint sources or atmospheric deposition that may locally impact the pH of the rain water, however this is not categorized as acid rain as referred to by the U.S. EPA for the NEC coverage

DRAFT

requirements. The No Exposure Guidance Document[13] developed by the U.S. EPA mentions acid rain as a potential source of contaminants to consider for NEC coverage. The acid rain leachate language was not included in this General Permit's Appendix 2 to clarify that Dischargers may qualify for NEC coverage, even if the facility has metal buildings or structures.

The Discharger shall certify and submit complete PRDs for NEC coverage via SMARTS. Based upon the State Water Board's experience with reissuing and implementing the 2009 Construction General Permit, the transition for existing Dischargers to register under this new General Permit is staff resource intensive. The State Water Board staff is available to assist Dischargers requiring assistance with enrolling under this General Permit, both for NOI coverage and NEC coverage. The State Water Board has also experienced that more time is needed for its staff to assist Dischargers registering for NEC coverage. To provide better customer service to all Dischargers, three months have been added to the NEC coverage PRD submittal schedule for new and existing Dischargers (Section II.B.4 of this General Permit, extending the NEC coverage registration date to October 1, 2015.

Dischargers must annually inspect their facility to ensure continued compliance with NEC requirements, and annually re-certify and submit an NEC via SMARTS. Based on its regulatory experience, the State Water Board has determined that a five-year NEC re-certification period is inadequate. A significant percentage of facilities may revise, expand, or relocate their operations in any given year. Furthermore, a significant percentage of facilities experience turnover of staff knowledgeable of the NEC requirements and limitations. Accordingly, the State Water Board believes that annual NEC evaluation and re-certification requirements are appropriate to continually assure adequate program compliance.

Q. Special Requirements - Plastic Materials

Water Code section 13367 requires the Water Boards to implement measures that control discharges of preproduction plastic from point and nonpoint sources. The State Water Board intends to use this General Permit to regulate discharges of preproduction plastics from areas of facilities that are subject to this General Permit. A Regional Water Board may designate facilities, or areas of facilities, that are not otherwise subject to this General Permit, pursuant to Section XIX.F. For example, a Regional Water Board may designate Plastic Materials handling areas of a transportation facility that are not associated with vehicle maintenance as requiring coverage under this General Permit.

Preproduction plastics used by the plastic manufacturing industry are small in size and have the potential to mobilize in storm water. Preproduction plastic washed into storm water drains can move to waters of the United States where it contributes to the growing problem of plastic debris in inland and coastal waters. Water Code section 13367 outlines five mandatory BMPs that are required for all facilities that handle preproduction plastic. These mandatory BMPs are included in this General Permit.

[13] U.S. EPA. Guidance Manual for Conditional Exclusion from Storm Water Permitting Based On "No Exposure" of Industrial Activities to Storm Water. Web. June 2000. < http://www.epa.gov/npdes/pubs/noxguide.pdf>. [as of January 31, 2014].

The State Water Board has received comments regarding the Water Code requirements for Plastics Facilities to install a containment system for on-site storm drain locations that meet 1mm capture and 1-year 1-hour storm flow requirement standards. As a result, this General Permit includes the option under Water Code section 13367 that allows a plastics facility to propose an alternative BMP or suite of BMPs that can meet the same performance and flow requirements as a 1mm capture and 1-year 1-hour storm flow containment system standards. These alternative BMPs are to be submitted to the Regional Water Board for approval. This alternative is intended to allow the facility to develop BMPs that focus on pollution prevention measures that can perform as well as, or better than, the containment system otherwise required by the statute.

The State Water Board also includes two additional containment system alternatives in this General Permit that are considered to be equivalent to, or better than, the 1mm capture and 1-year 1-hour storm flow requirements:

- An alternative allowing plastic facilities to implement a suite of eight BMPs addressing the majority of potential sources of plastic discharges. This suite of BMPs is based on industry and U.S. EPA recommendations and Water Board experience with storm water inspections, violations, and enforcement cases throughout California.

- An alternative allowing a facility to operate in a manner such that all preproduction plastic materials are used indoors and pose no potential threat for discharge off-site. The facility is required to notify the Regional Water Board of the intent to seek this exemption and of any changes to the facility or operations that may disqualify the facility for the exemption. The exemption may be revoked by the Regional Water Board at any time.

Plastics facilities may use preproduction plastic materials that are less than 1mm in size, or produce materials, byproducts, or waste that is smaller than 1mm in size. These small size materials will pass through the 1mm capture containment system required by Water Code section 13367. Plastics facilities with sub-1mm materials must design a containment system to capture the smallest size material onsite with a 1-year 1-hour storm flow requirement, or propose alternative BMPs for Regional Water Board approval that meet the same requirements.

The remaining BMPs required by Water Code section 13367 are consistent with recommendations for handling and clean-up of preproduction plastics in the American Chemistry Council publication, *Operation Clean Sweep* and U.S. EPA's publication *Plastic Pellets in the Aquatic Environment: Sources and Recommendations*. The State Water Board believes that the entire approach in this General Permit for plastic materials is consistent with Water Code section 13367.

R. Regional Water Board Authorities

The Regional Water Boards retain discretionary authority over many issues that may arise from industrial discharges within their respective regions. This General Permit emphasizes the authority of the Regional Water Boards over specific requirements of this General Permit that do not meet region-specific water quality protection regulatory needs.

S. Special Conditions: Requirements for Dischargers Claiming the "No Discharge" Option in the Notice of Non-Applicability

1. General

Entities that operate facilities generating storm water associated with industrial activities that is not discharged to waters of the United States are not required to obtain General Permit coverage. Entities that have contacted the Water Boards to inquire what is necessary to avoid permit coverage have received inconsistent guidance. This has resulted in regulatory inconsistency and uncertainty as to whether they are in compliance if their industry operates without General Permit coverage. Depending upon how each Regional Water Board handles "No Discharge" claims, some facilities with advanced containment design may be required to obtain General Permit coverage while other facilities with less advanced containment design may be allowed to operate without General Permit coverage. Some stakeholders have complained that this type of regulatory inconsistency puts some facilities at an economically-competitive disadvantage given the costs associated with permit compliance.

U.S. EPA regulations do not provide a design standard, definition, or guidance as to what constitutes "No Discharge." Unlike Conditional Exclusion requirements, U.S. EPA regulations do not require an entity to submit technical justification or certification that a facility does not discharge to waters of the United States (U.S.). Therefore entities have previously been allowed to self-determine that their facility does not discharge to water of the U.S. when using any containment design standard. The State Water Board does not have available information showing that most entities have adequately performed hydraulic calculations to determine the frequency of discharge corresponding to their containment controls or have had these hydraulic calculations reviewed or completed by a California licensed professional engineer. Although U.S. EPA makes clear that an unpermitted discharge to waters of the U.S. is a violation of the CWA, this leaves regulatory agencies with the very difficult task of knowing when any given facility discharges in order to carry-out enforcement actions.

In 1998, the Water Code was amended to require entities who are requested by the Water Boards to obtain General Permit coverage, but that have a valid reason to not obtain General Permit coverage, to submit a Notice of Non-Applicability (NONA). (Wat. Code, § 13399.30, subd. (a)(2)). The NONA covers multiple reasons why an entity is not required to be permitted including (1) facility closure, (2) not the legal owner, (3) incorrect SIC code, (4) eligibility for the Conditional Exclusion (No Exposure Certification), and (5) the facility not discharging to water of the U.S. ("No Discharge"). The previous permit contained definitions, requirements, and guidance that entities may reference to determine whether they are eligible to select any of the first four NONA reasons for not obtaining General Permit coverage. However, neither the previous permit nor the Water Code provide definitions, requirements, and guidance for entities to determine whether they are eligible to indicate "No Discharge" on the NONA as a reason for not obtaining General Permit coverage.

This General Permit addresses and resolves the issues discussed above by establishing consistent, statewide eligibility requirements in Section XX.C for entities submitting NONAs indicating "No Discharge." When requested by the Water Boards to obtain General Permit coverage, entities must meet these "No Discharge" eligibility requirements or obtain General Permit coverage. The Water Boards retain enforcement authority if a facility subsequently discharges.

2. "No Discharge" Eligibility Requirements

   The entity must certify submit in SMARTS a NONA Technical Report signed (wet signature and license number) by a California licensed professional engineer that contains the analysis and details of the containment design supporting the "No Discharge" eligibility determination. Because containment design will require hydraulic calculations, soil permeability analysis, soil stability calculations, appropriate safety factor consideration, and the application of other general engineering principles, state law requires the technical report to be signed (wet signature and license number) by a California licensed professional engineer.

   The State Water Board has selected a containment design target that, as properly applied will result in few, if any, discharges. The facility must either be:

   a. Engineered and constructed to contain all storm water associated with industrial activities from discharging to waters of the United States, including no discharge to groundwater that has a direct hydrologic connection to waters of the United States. Dischargers must base this information upon maximum historic precipitation event data (or series of events) from the nearest rain gauges as provided by the National Oceanic and Atmospheric Administration's (NOAA) website, or other nearby precipitation data available from other government agencies. At a minimum, Dischargers must ensure that the containment design addresses maximum 1-hour, 24-hour, weekly, monthly, and annual precipitation data for the duration of the exclusion.

      Design storm events are generally specified as a one-time expected hydraulic failure over a reoccurrence of years for a specified storm event. For example, if a design storm standard is a 100 year 24-hour event, then a facility's containment system designed to contain the maximum volume of water would be expected to fall in 24 hours once every 100 years. Design standards vary dependent upon the regulatory program and the level of protection needed. Since California has considerable variations in climate/topography/soil conditions across the state, the "No Discharge" NONA eligibility requirements have been created so that each facility's containment design can incorporate unique site specific circumstances to meet the requirement that discharges will not occur based upon past historical precipitation data. Facilities that are not designed to not meet the "No Discharge" eligibility requirements must obtain General Permit coverage.

   b. Located in basins or other physical locations that are not hydrologically connected to waters of the United States.

The State Water Board considered allowing Entities to review United States Army Corp of Engineer maps to determine, without a California licensed professional engineer, whether their facility location is within a basin and/or other physical location that is not hydrologically connected to waters of the United States. The State Water Board believes that this determination can be difficult in some cases, or is likely to be performed incorrectly. In addition, there may be areas of the state that are not hydrologically connected to waters of the United States, but are not on United States Army Corps of Engineer maps. Therefore, all "No Discharge" Technical Reports must be signed (wet signature and license number) by a California licensed professional engineer.

3. Additional Considerations

The "No Discharge" determination does not cover storm water containment systems that transfer industrial pollutants to groundwater. Entities must determine whether designs that incorporate infiltration may discharge to and contaminate groundwater. If there is a threat to groundwater, Entities must contact the Regional Water Boards prior to construction of infiltration design elements.

Entities that have not eliminated all discharges that are subject to General Permit coverage (NOI Coverage or NEC Coverage) are ineligible to submit NONAs indicating "No Discharge."

DRAFT

ATTACHMENT A

FACILITIES COVERED BY NATIONAL POLLUTANT DISCHARGE ELIMINATION SYSTEM (NPDES) GENERAL PERMIT FOR STORM WATER DISCHARGES ASSOCIATED WITH INDUSTRIAL ACTIVITIES (GENERAL PERMIT)

1. Facilities Subject To Storm Water Effluent Limitations Guidelines, New Source Performance Standards, or Toxic Pollutant Effluent Standards Found in 40 Code of Federal Regulations, Chapter I, Subchapter N (Subchapter N):

   Cement Manufacturing (40 C.F.R. Part 411); Feedlots (40 C.F.R. Part 412); Fertilizer Manufacturing (40 C.F.R. Part 418); Petroleum Refining (40 C.F.R. Part 419), Phosphate Manufacturing (40 C.F.R. Part 422), Steam Electric (40 C.F.R. Part 423), Coal Mining (40 C.F.R. Part 434), Mineral Mining and Processing (40 C.F.R. Part 436), Ore Mining and Dressing (40 C.F.R. Part 440), Asphalt Emulsion (40 C.F.R. Part 443), Landfills (40 C.F.R. Part 445), and Airport Deicing (40 C.F.R. Part 449).

   .

2. Manufacturing Facilities:

   Facilities with Standard Industrial Classifications (SICs) 20XX through 39XX, 4221 through 4225. (This category combines categories 2 and 10 of the previous general permit.)

3. Oil and Gas/Mining Facilities:

   Facilities classified as SICs 10XX through 14XX, including active or inactive mining operations (except for areas of coal mining operations no longer meeting the definition of a reclamation area under 40 Code of Federal Regulations. 434.11(1) because the performance bond issued to the facility by the appropriate Surface Mining Control and Reclamation Acts authority has been released, or except for areas of non-coal mining operations which have been released from applicable State or Federal reclamation requirements after December 17, 1990) and oil and gas exploration, production, processing, or treatment operations, or transmission facilities that discharge storm water contaminated by contact with or that has come into contact with any overburden, raw material, intermediate products, finished products, by-products, or waste products located on the site of such operations. Inactive mining operations are mining sites that are not being actively mined, but which have an identifiable owner/operator. Inactive mining sites do not include sites where mining claims are being maintained prior to disturbances associated with the extraction, beneficiation, or processing of mined material; or sites where minimal activities are undertaken for the sole purpose of maintaining a mining claim.

4. Hazardous Waste Treatment, Storage, or Disposal Facilities:

   Hazardous waste treatment, storage, or disposal facilities, including any facility operating under interim status or a general permit under Subtitle C of the Federal Resource, Conservation, and Recovery Act.

5. Landfills, Land Application Sites, and Open Dumps:

   Landfills, land application sites, and open dumps that receive or have received industrial waste from any facility within any other category of this Attachment; including facilities subject to regulation under Subtitle D of the Federal Resource, Conservation, and Recovery Act, and facilities that have accepted wastes from construction activities (construction activities include any clearing, grading, or excavation that results in disturbance).

6. Recycling Facilities:

   Facilities involved in the recycling of materials, including metal scrapyards, battery reclaimers, salvage yards, and automobile junkyards, including but limited to those classified as Standard Industrial Classification 5015 and 5093.

7. Steam Electric Power Generating Facilities:

   Any facility that generates steam for electric power through the combustion of coal, oil, wood, etc.

8. Transportation Facilities:

   Facilities with SICs 40XX through 45XX (except 4221-25) and 5171 with vehicle maintenance shops, equipment cleaning operations, or airport deicing operations. Only those portions of the facility involved in vehicle maintenance (including vehicle rehabilitation, mechanical repairs, painting, fueling, and lubrication) or other operations identified under this Permit as associated with industrial activity.

9. Sewage or Wastewater Treatment Works:

   Facilities used in the storage, treatment, recycling, and reclamation of municipal or domestic sewage, including land dedicated to the disposal of sewage sludge, that are located within the confines of the facility, with a design flow of one million gallons per day or more, or required to have an approved pretreatment program under 40 Code of Federal Regulations part 403. Not included are farm lands, domestic gardens, or lands used for sludge management where sludge is beneficially reused and are not physically located in the confines of the facility, or areas that are in compliance with Section 405 of the Clean Water Act.

DRAFT

ATTACHMENT B

ACRONYM LIST

NATIONAL POLLUTANT DISCHARGE ELIMINATION SYSTEM (NPDES)
GENERAL PERMIT FOR STORM WATER DISCHARGES
ASSOCIATED WITH INDUSTRIAL ACTIVITIES
(GENERAL PERMIT)

ASBS	Areas of Special Biological Significance
BAT	Best Available Technology Economically Achievable
BCT	Best Conventional Pollutant Control Technology
BMP	Best Management Practices
BOD	Biochemical Oxygen Demand
~~BPJ~~	~~Best Professional Judgment~~
BPT	Best Practicable Control Technology Currently Available
CBPELSG	California Board for Professional Engineers, Land Surveyors and Geologists
~~CTR~~	~~California Toxics Rule~~
DWQ	Division of Water Quality
ELGs	Effluent Limitations Guidelines and New Source Performance Standards
~~EPA~~	~~Environmental Protection Agency~~
ERA	Exceedance Response Action
~~LA~~	~~Load Allocation~~
~~MDL~~	~~Method Detection Limit~~
~~MIP~~	~~Monitoring Implementation Plan~~
~~ML~~	~~Minimum Level~~
~~MPA~~	~~Marine Protected Area~~
MS4	Municipal Separate Storm Sewer System
MSGP	Multi Sector General Permit
NAL	Numeric Action Level
NAICS	North American Industrial Classification System
NEC	No Exposure Certification
NEL	Numeric Effluent Limitation
NOI	Notice of Intent
NONA	Notice of Non Applicability
NOT	Notice of Termination
NPDES	National Pollutant Discharge Elimination System
NSPS	New Source Performance Standards
NSWD	Non Storm Water Discharges
O&G	Oil and Grease
PRDs	Permit Registration Documents
QA/QC	Quality Assurance/Quality Control
~~QCS~~	~~Qualified Combined Samples~~

ACRONYM LIST

QISP	Qualified Industrial Storm water Practitioner
QSE	Qualifying Storm Event
~~RSR~~	~~Representative Sampling Reduction~~
~~SFR~~	~~Sampling Frequency Reduction~~
SIC	Standard Industrial Classification
SMARTS	Storm Water Multiple Application Reporting and Tracking System
SWPPP	Storm Water Pollution Prevention Plan
TBEL	Technology Based Effluent Limitation
TDS	Total Dissolved Solids
TMDL	Total Maximum Daily Load
TOC	Total Organic Carbon
TSS	Total Suspended Solids
U.S. EPA	United States Environmental Protection Agency
WDID	Waste Discharge Identification Number
~~WLA~~	~~Waste Load Allocation~~
WQBEL	Water Quality Based Effluent Limitation
~~WQS~~	~~Water Quality Standard~~

DRAFT

ATTACHMENT C

GLOSSARY

NATIONAL POLLUTANT DISCHARGE ELIMINATION SYSTEM (NPDES)
GENERAL PERMIT FOR STORM WATER DISCHARGES
ASSOCIATED WITH INDUSTRIAL ACTIVITIES
(GENERAL PERMIT)

Adoption Date [Insert Adoption Date Here]

Aerial Deposition
Total suspended particulate matter found in the atmosphere as solid particles or liquid droplets. Chemical composition of particulates varies widely, depending on location and time of year. Sources of airborne particulates include but are not limited to: dust, emissions from industrial processes, combustion products from the burning of wood and coal, combustion products associated with motor vehicle or non-road engine exhausts, and reactions to gases in the atmosphere. Deposition is the act of these materials being added to a landform.

Beneficial Uses
As defined in the California Water Code, beneficial uses of the waters of the state that may be protected against quality degradation, include but are not limited to, domestic, municipal, agricultural and industrial supply; power generation; recreation; aesthetic enjoyment; navigation; and preservation and enhancement of fish, wildlife, and other aquatic resources or preserves.

Best Available Technology Economically Achievable (BAT)
As defined by United States Environmental Protection Agency (U.S. EPA), BAT is a technology-based standard established by the Clean Water Act (CWA) as the most appropriate means available on a national basis for controlling the direct discharge of toxic and nonconventional pollutants to navigable waters. The BAT effluent limitations guidelines, in general, represent the best existing performance of treatment technologies that are economically achievable within an industrial point source category or subcategory.

Best Conventional Pollutant Control Technology (BCT)
As defined by U.S. EPA, BCT is a technology-based standard for the discharge from existing industrial point sources of conventional pollutants including biochemical oxygen demand (BOD), total suspended sediment (TSS), fecal coliform, pH, oil and grease.

Best Professional Judgment (BPJ)
The method used by permit writers to develop technology-based NPDES permits conditions on a case-by-case basis using all reasonably available and relevant data.

GLOSSARY

Best Management Practices (BMPs)
Scheduling of activities, prohibitions of practices, maintenance procedures, and other management practices to prevent or reduce the discharge of pollutants. BMPs also include treatment requirements, operating procedures, and practices to control site runoff, spillage or leaks, sludge or waste disposal, or drainage from raw material storage.

Chain of Custody
Form used to track sample handling as samples progress from sample collection to the laboratory. The chain of custody is also used to track the resulting analytical data from the laboratory to the client. Chain of custody forms can be obtained from an analytical laboratory upon request.

Debris
Litter, rubble, discarded refuse, and remains of destroyed inorganic anthropogenic waste.

Detected Not Quantifiable ~~(DNQ)~~
A s~~S~~ample result that is between the Method Detection Limit (MDL) and the Minimum Level (ML).

Discharger
A person, company, agency, or other entity that is the operator of the industrial facility covered by this General Permit.

Drainage Area
The area of land that drains water, sediment, pollutants, and dissolved materials to a common discharge location.

Effective Date
The date, set by the State Water Resources Control Board (State Water Board), when at least one or more of the ~~new~~ General Permit~~'s~~ requirements take effect and the previous permit expires. ~~The Effective Date contained in t~~This General Permit ~~draft has~~requires most of the requirements (such as SMARTs submittals, minimum BMPs, sampling and analysis requirements) to take~~ing~~ effect on July~~anuary~~ 15, 2015.

Effluent
Any discharge of water either to the receiving water or beyond the property boundary controlled by the Discharger.

Effluent Limitation
Any numeric or narrative restriction imposed on quantities, discharge rates, and concentrations of pollutants that are discharged from point sources into waters of the United States, waters of the contiguous zone, or the ocean.

DRAFT

GLOSSARY

Erosion
The process by which soil particles are detached and transported by the actions of wind, water~~,~~ or gravity.

Erosion Control BMPs
Vegetation, such as grasses and wildflowers, and other materials, such as straw, fiber, stabilizing emulsion, protective blankets, etc., placed to stabilize areas of disturbed soils, reduce loss of soil due to the action of water or wind, and prevent water pollution.

Facility
A collection of industrial processes discharging storm water associated with industrial activity within the property boundary or operational unit.

Field Measurements
Testing procedures performed in the field with portable field-testing kits or meters.

Good Housekeeping BMPs
BMPs designed to reduce or eliminate the addition of pollutants through analysis of pollutant sources, implementation of proper handling/disposal practices, employee education, and other actions.

Industrial Materials
Includes, but is not limited to: raw materials, recyclable materials, intermediate products, final products, by product, waste products, fuels, materials such as solvents, detergents, and plastic pellets; finished materials such as metallic products; raw materials used in food processing or production; hazardous substances designated under Section 101(14) of Comprehensive Environmental Response, Compensation, and Liability Act (CERLCA); any chemical the facility is required to report pursuant to Section 313 of Title III of Superfund Amendments and Reauthorization Act (SARA); fertilizers; pesticides; and waste products such as ashes, slag, and sludge and that are used, handled, stored, or disposed in relation to a facility's industrial activity.

Method Detection Limit ~~(MDL)~~
The minimum concentration of a substance that can be measured and reported with 99% confidence that the analyte concentration is greater than zero.

Minimum Level ~~(ML)~~
The lowest level at which the entire analytical system must give a recognizable signal and acceptable calibration point for the analyte. It is equivalent to the concentration of the lowest calibration standard, assuming that all method-specified sample weights, volumes, and cleanup procedures have been employed.

Monitoring Implementation Plan ~~(MIP)~~
Planning document included in the Storm Water Pollution Prevention Plan (SWPPP). Dischargers are required to record information on the implementation of the monitoring requirements in this General Permit. The MIP should include relevant information on:

the Monthly Visual Observation schedule, Sampling Parameters, Representative Sampling Reduction ~~(RSR)~~, Sample Frequency Reduction ~~(SFR)~~, and Qualified Combined Samples ~~(QCS)~~.

Monitoring Requirements
Includes sampling and analysis activities as well as visual observations.

Natural Background
Pollutants including substances that are naturally occurring in soils or groundwater. Natural background pollutants do not include legacy pollutants from previous activity at a facility~~on your site~~, or pollutants in run-on from neighboring sources which are not naturally occurring.

New Discharge(r)
A facility from which there is a discharge, that did not commence the discharge at a particular site prior to August 13, 1979, which is not a new source as defined in 40 Code of Federal Regulations 122.29, and which has never received a finally effective NPDES permit for discharges at that site. See 40 Code of Federal Regulations 122.2.

Numeric Action Level (NAL) Exceedance
Annual NAL exceedance - the Discharger shall determine the average concentration for each parameter using the results of all the sampling and analytical results for the entire facility for the reporting year (i.e., all "effluent" data) and compare this to the corresponding Annual NAL values in Table 2. For Dischargers using composite sampling or flow measurement in accordance with standard practices, the average concentrations shall be calculated in accordance with the U.S. EPA Guidance Manual for the Monitoring and Reporting Requirements of the NPDES Multi-Sector Storm Water General Permit.[1] An annual NAL exceedance occurs when the average of all the analytical results for a parameter from samples taken within a reporting year exceeds an annual NAL value for that parameter listed in Table 2 (or is outside the NAL pH range);

Instantaneous maximum NAL exceedance - the Discharger shall compare all sampling and analytical results from each distinct sample (individual or composite) to the corresponding Instantaneous maximum NAL values in Table 2. An instantaneous maximum NAL exceedance occurs when two or more analytical results from samples taken for any parameter within a reporting year exceed the instantaneous maximum NAL value (for TSS and O&G), or are outside of the instantaneous maximum NAL range (for pH).

~~**Non-Visible Pollutants**~~
~~Pollutants associated with a specific site or activity that can have a negative impact on water quality, but cannot be seen though observation (ex: chlorine). Such pollutants being discharged are not authorized.~~

[1] U.S. EPA. NPDES Storm Water Sampling Guidance Document. <http://www.epa.gov/npdes/pubs/owm0093.pdf >. [as of July 3, 2013]

Non Detect ~~(ND)~~
Sample result is less than Method Detection Limit ~~(MDL)~~; Analyte being tested cannot be detected by the equipment or method.

Non-Storm Water Discharges (NSWDs)
Discharges that do not originate from precipitation events. Including~~,~~ but not limited to, discharges of process water, air conditioner condensate, non-contact cooling water, vehicle wash water, sanitary wastes, concrete washout water, paint wash water, irrigation water, or pipe testing water.

Numeric Action Level (NAL)
Pollutant concentration levels used to evaluate if best management practices are effective and if additional measures are necessary to control pollutants. NALs are not effluent limits. The exceedance of an NAL is not a permit violation.

Operator
In the context of storm water associated with industrial activity, any party associated with an industrial facility that meets either of the following two criteria:

a. The party has operational control over the industrial SWPPP and SWPPP specifications, including the ability to make modifications to those plans and specifications

b. The party has day-to-day operational control of activities at the facility which are necessary to ensure compliance with a SWPPP for the facility or other permit conditions (e.g., authorized to direct workers at a site to carry out activities required by the SWPPP or comply with other permit conditions).

pH
Unit universally used to express the intensity of the acid or alkaline condition of a water sample. The pH of natural waters tends to range between 6.0 and 9.0, with neutral being 7.0. ~~Extremes of pH can have deleterious effects on aquatic systems.~~

Plastic Materials
~~Plastic resin pellets, powders, flakes, additives, regrind, scrap, dust, and industrial process waste or recycling that has the potential to discharge or migrate and discharge off-site.~~ Plastic Materials are virgin and recycled plastic resin pellets, powders, flakes, powdered additives, regrind, dust, and other similar types of preproduction plastics with the potential to discharge or migrate off-site.

Qualified Industrial Storm Water Practitioner (QISP)
Only required once a Discharger reaches Level 1 status, a QISP is the individual assigned to ensure compliance with this General Permit. This includes implementing the SWPPP, performing the Annual Comprehensive Facility Compliance Evaluation (Annual Evaluation), assisting in the preparation of Annual Reports, performing ERAs,

and training appropriate ~~p~~Pollution ~~p~~Prevention ~~t~~Team members. The individual must take the appropriate state approved or sponsored training to be qualified. Dischargers shall ensure that the designated QISP is geographically located in an area where they will be able to adequately perform the permit requirements at all of the facilities they represent.

Qualifying Storm Event (QSE)
A precipitation event that:

a. Produces a discharge for at least one drainage area; and

b. Is preceded by 48 hours with no discharge from any drainage area.

Regional Water Board
Includes the Executive Officer and delegated Regional Water Board staff.

Runoff Control BMPs
Measures used to divert run-on from offsite and runoff within the site.

Run-on
Discharges that originate offsite and flow onto the property of a separate facility or property or, discharges that originate onsite from areas not related to industrial activities and flow onto areas on the property with industrial activity.

Scheduled Facility Operating Hours
The time periods when the facility is staffed to conduct any function related to industrial activity, but excluding time periods where only routine maintenance, emergency response, security, and/or janitorial services are performed.

Sediment
Solid particulate matter, both mineral and organic, that is in suspension, is being transported, or has been moved from its origin by air, water, gravity, or ice and has come to rest on the earth's surface either above or below sea level.

Sedimentation
Process of deposition of suspended matter carried by water, wastewater, or other liquids that flow by gravity. Control of sedimentation is accomplished by reducing the velocity of the liquid below the point at which it can transport the suspended material.

Sediment Control BMPs
Practices that trap soil particles after they have been eroded by rain, flowing water, or wind. Includes those practices that intercept and slow or detain the flow of storm water to allow sediment to settle and be trapped (i.e~~.g~~., silt fence, sediment basin, fiber rolls, etc.).

Sheet Flow

Flow of water that occurs overland in areas where there are no defined channels and where the water spreads out over a large area at a uniform depth.

~~**Significant Materials**~~
~~Includes, but is not limited to: raw materials; fuels; materials such as solvents, detergents, and plastic pellets; finished materials such as metallic products; raw materials used in food processing or production; hazardous substances designated under Section 101(14) of Comprehensive Environmental Response, Compensation, and Liability Act (CERLCA); any chemical the facility is required to report pursuant to Section 313 of Title III of Superfund Amendments and Reauthorization Act (SARA); fertilizers; pesticides; and waste products such as ashes, slag, and sludge that have the potential to be released with industrial storm water discharges~~

Source
Any facility or building, property, road, or area that causes or contributes to pollutants in storm water.

Storm Water
Storm water runoff, snowmelt runoff, and storm water surface runoff and drainage.

Storm Water Discharge Associated With Industrial Activity
The discharge from any conveyance which is used for collecting and conveying storm water and which is directly related to manufacturing, processing, or raw materials storage areas at an industrial plant as identified in Attachment A of this General Permit. The term does not include discharges from facilities or activities excluded from the NPDES program. The term includes, but is not limited to, storm water discharges from industrial plant yards; immediate access roads and rail lines used or traveled by carriers of raw materials; manufactured products, waste material, or by-products used or created by the facility; material handling sites; refuse sites; sites used for the application or disposal of process wastewaters (as defined at 40 C.F.R. section 401); sites used for the storage and maintenance of material handling equipment; sites used for residual treatment, storage, or disposal; shipping and receiving areas; manufacturing buildings; storage areas (including tank farms) for raw materials, and intermediate and finished products; and areas where industrial activity has taken place in the past and significant materials remain and are exposed to storm water. The term does not include discharges from facilities or activities excluded from the NPDES program under 40 C.F.R. section 122.

Material handling activities include the: storage, loading and unloading, transportation, or conveyance of any raw material, intermediate product, finished product, by-product, or waste product. The term excludes areas located on plant lands separate from the plant's industrial activities, such as office buildings and accompanying parking lots as long as the drainage from the excluded areas is not mixed with storm water drained from the above described areas. Industrial facilities (including industrial facilities that are federally, State, or municipally owned or operated that meet the description of the

facilities listed in this paragraph) include those facilities designated under 40 C.F.R. section122.26(a)(1)(v).

Structural Controls
Any structural facility designed and constructed to mitigate the adverse impacts of storm water and urban runoff pollution.

Total Suspended Solids (TSS)
The measure of the suspended solids in a water sample including inorganic substances such as soil particles, organic substances such as algae, aquatic plant/animal waste, and particles related to industrial/sewage waste, etc. The TSS test measures the concentration of suspended solids in water by measuring the dry weight of a solid material contained in a known volume of a sub-sample of a collected water sample. Results are reported in mg/L.

Toxicity
The adverse response(s) of organisms to chemicals or physical agents ranging from mortality to physiological responses, such as impaired reproduction or growth anomalies.

Trade Secret
Information, including a formula, pattern, compilation, program, device, method, technique, or process, that: (1) derives independent economic value, actual or potential, from not being generally known to the public or to other persons who can obtain economic value from its disclosure or use; and (2) is the subject of efforts that are reasonable under the circumstances to maintain its secrecy.

Turbidity
The cloudiness of water quantified by the degree to which light traveling through a water column is scattered by the suspended organic and inorganic particles it contains. The turbidity test is reported in Nephelometric Turbidity Units (NTU) or Jackson Turbidity Units (JTU).

Waters of the United States
Generally refers to surface waters, as defined for the purposes of the federal Clean Water Act.

Water Quality Objectives
Defined in the California Water Code as limits or levels of water quality constituents or characteristics which are established for the reasonable protection of beneficial uses of water or the prevention of nuisance within a specific area.

Water Quality Standards
Consists of beneficial uses, water quality objectives to protect those uses, an antidegradation policy, and policies for implementation. Water quality standards are established in Regional Water Quality Control Plans (Basin Plans) and statewide Water

Quality Control Plans. U.S. EPA has also adopted water quality criteria (the same as objectives) for California in the National Toxics Rule and California Toxics Rule.

DRAFT

ATTACHMENT D

PERMIT REGISTRATION DOCUMENTS (PRDs)

NATIONAL POLLUTANT DISCHARGE ELIMINATION SYSTEM (NPDES)
GENERAL PERMIT FOR STORM WATER DISCHARGES
ASSOCIATED WITH INDUSTRIAL ACTIVITIES
(GENERAL PERMIT)

This Attachment provides an example of the information Dischargers are required to submit in the PRDs via the Storm Water Multi-Application Reporting Tracking System (SMARTS). The actual PRD requirements are in Section II of this General Permit.

A. Who Must Submit PRDs

All Dischargers that operate facilities as described in Attachment A of this General Permit are subject to either Notice of Intent (NOI) or No Exposure Certification (NEC) Coverage and shall comply with the PRD requirements in this General Permit~~Attachment~~.

B. Who Is Not Required to Submit PRDs

Dischargers that operate facilities described below are not required to submit PRDs:

1. Facilities that are not described in Attachment A~~,~~; ~~or~~
2. Facilities that are described in Attachment A but do not have discharges of storm water associated with industrial activity to waters of the United States~~,~~; or,
3. Facilities that are already covered by an NPDES permit for discharges of storm water associated with industrial activity.

C. Annual Fees for NOI and NEC Coverage

Annual Fees for NOI and NEC coverage are established through regulations adopted by the State Water Board and are subject to change (see California Code of Regulations, title 23, section 2200 et seq.).

~~1. The Annual Fee for NOI Coverage as of the Adoption Date of this General Permit is $1359.~~

~~2. The Annual Fee for NEC Coverage as of the Adoption Date of this General Permit is $242.~~

D. When and How to Apply

Dischargers proposing to conduct industrial activities subject to this General Permit must electronically certify and submit PRDs via the Storm Water Multiple Application Reporting and Tracking System (SMARTS)[1] no less than seven (7) days prior to the commencement of industrial activity. Existing Dischargers must submit PRDs by January 1, 2015.

E. PRD Requirements for NOI Coverage

1. Notice of Intent (NOI) and Signed Electronic Authorization Form.
2. Site Map (Section X.E of this General Permit).
3. Storm Water Pollution Prevention Plan (see Section X of this General Permit).

F. Description of PRDs for NOI Coverage

1. The Notice of Intent (NOI) requires the following information:

   a. Operator/Owner Information

      Operator/Owner Company or Organization Name
      Contact First Name
      Contact Last Name
      Title
      Street Address
      Address Line 2
      City/State/Zip
      Phone ~~Ex~~ (e.g. 999-999-9999)
      E-mail (e.g. abc@xyz.com)
      Federal Tax ID

   b. Facility Information

      Facility Name
      WDID Number (if applicable)
      Contact First Name
      Contact Last Name

[1] The State Water Board has developed the SMARTS online database system to handle registration and reporting under this General Permit. More information regarding SMARTS and access to the database is available online at <https://smarts.waterboards.ca.gov>. [as of June 26, 2013].

DRAFT

Title
Street Address
Address Line 2
City
County
Phone ~~Ex~~ (e.g. 999-999-9999)
Emergency Phone ~~Ex~~ (e.g. 999-999-9999)
E-mail (abc@xyz.com)
State/Zip CA
Total Site Size (Acres)
Latitude (Decimal degrees only, minimum 5 significant digits, e.g.~~Ex~~ 99.99999)
Longitude (Decimal degrees only, minimum 5 significant digits, e.g.~~Ex~~ 99.99999)
Total Percentage ~~of~~ Site Imperviousness Area of Facility~~%~~ (Acres)
Total Areas of Industrial Activities and Materials Exposed to Precipitation
Primary SIC Code
Secondary SIC Code
Tertiary SIC Code
Regional Water Board

c. Billing Information

Billing Name
Contact First Name
Contact Last Name
Title
Street Address
Address Line 2
City/State/Zip
Phone ~~Ex~~ (e.g. 999-999-9999)
E-mail (e.g. abc@xyz.com)

d. Receiving Water Information

Does your facility's storm water flow directly or indirectly into waters of the US such as river, lake, ocean, etc. (check box for directly or indirectly)

i. Indirectly to waters of the US

ii. Storm drain system - Enter owner's name:

iii. Directly to waters of the US (e.g., river, lake, creek, stream, bay, ocean, etc.)

DRAFT

iv. Name of the receiving water: _____

2. The Site Map(s) shall include the following Information:

a. The facility boundary;

b. Storm water drainage areas within the facility boundary;

c. Portions of any drainage area impacted by discharges from surrounding areas and flow direction of each drainage area;

d. On-facility surface water bodies;

e. Areas of soil erosion;

f. Location(s) of nearby water bodies (such as rivers, lakes, wetlands, etc.);

g. Location(s) of municipal storm drain inlets that may receive the facility's industrial storm water discharges and authorized Non-Storm Water Discharges (NSWDs);

h. Locations of storm water collection and conveyance systems and associated points of discharge, and direction of flow;

i. Any structural control measures (that affect industrial storm water discharges, authorized NSWDs, and run-on)~~-~~;

j. All impervious areas of the facility, including paved areas, buildings, covered storage areas, or other roofed structures;

k. Locations where materials are directly exposed to precipitation;

l. ~~and the l~~Locations where significant spills or leaks identified (Section X.G.1.d of this General Permit) have occurred;

m. Areas of industrial activity subject to this General Permit;

n. All storage areas and storage tanks;

o. Shipping and receiving areas;

p. Fueling areas;

q. Vehicle and equipment storage/maintenance areas;

r. Material handling and processing areas;

s. Waste treatment and disposal areas;

t. Dust or particulate generating areas;

u. Cleaning and material reuse areas; and,

v. Any other areas of industrial activity which may have potential pollutant sources.

3. The Storm Water Pollution Prevention Plan (SWPPP) must be prepared in accordance with Section X of this General Permit.

4. A NOI Certification by the Discharger that all PRDs submitted are correct and true.

5. SMARTS Electronic Authorization Form (Signed by any user authorized to certify and submit data electronically).

G. PRD Requirements for NEC Coverage

1. No Exposure Certification and Signed Electronic Authorization Form.

2. No Exposure Certification Checklist Consistent with Requirements in Section XVII.F.2 of this General Permit.

3. Current Site Map Consistent with Requirements in Section X.E of this General Permit.

DRAFT

H. Description of PRDs for NEC Coverage

1. The No Exposure Certification requires the following information:

   a. Operator/Owner Information

      Operator/Owner Name
      Contact First Name
      Contact Last Name
      Title
      Street Address
      Address Line 2
      City/State/Zip
      Phone Ex (999-999-9999)
      E-mail (abc@xyz.com)
      Federal Tax ID

   b. Facility Information

      Facility Name
      Contact First Name
      Contact Last Name
      Title
      Street Address
      Address Line 2
      City
      County
      Phone Ex (999-999-9999)
      Emergency Phone Ex (999-999-9999)
      E-mail (abc@xyz.com)
      State/Zip CA
      Total Site Size (Acres)
      Latitude (Decimal degrees only, minimum 5 significant digits, Ex 99.99999)
      Longitude (Decimal degrees only, minimum 5 significant digits, Ex 99.99999)
      Percent of Site Imperviousness (%)
      Primary SIC Code
      Secondary SIC Code
      Tertiary SIC Code
      Regional Water Board

   c. Billing Information

      Billing Name (if different than Operator/Owner)
      Contact First Name
      Contact Last Name

DRAFT

Title
Street Address
Address Line 2
City/State/Zip
Phone E.g. (999-999-9999)
E-mail (e.g. abc@xyz.com)

d. SMARTS Electronic Authorization Form - Signed by any user authorized to certify and submit data electronically.

e. Certification by the Discharger that all PRDs submitted are correct and true and that the conditions of no-exposure have been met.

2. The NEC Checklist (Section XVII.~~E~~F.2 of this General Permit) must be prepared to demonstrate that, based upon a facility inspection and evaluation, none of the following industrial materials or activities are, or will be in the foreseeable future, exposed to precipitation~~.~~:

a. Activities such as using, storing, or cleaning industrial machinery or equipment, and areas with materials or residuals from these activities;

b. Materials or residuals on the ground or in storm water inlets from spills/leaks;

c. Materials or products from past industrial activity;

d. Material handling equipment (except adequately maintained vehicles);

e. Materials or products during loading/unloading or transporting activities;

f. Materials or products stored outdoors (except final products intended for outside use, e.g., new cars, where exposure to storm water does not result in the discharge of pollutants);

g. Materials contained in open, deteriorated or leaking storage drums, barrels, tanks, and similar containers;

h. Materials or products handled/stored on roads or railways owned or maintained by the Discharger;

i. Waste material (except waste in covered, non-leaking containers, e.g., dumpsters). Application or disposal of processed wastewater (unless already covered by an NPDES permit); and,

j. Particulate matter or visible deposits of residuals from roof stacks/vents evident in the storm water outflow.

3. The Site Map(s) shall include the following information (see Section X.E of this General Permit):

   a. The facility boundary;

   b. Storm water drainage areas within the facility boundary;

   c. Portions of any drainage area impacted by discharges from surrounding areas and flow direction of each drainage area;

   d. On-facility surface water bodies;

   e. Areas of soil erosion;

   f. Location(s) of nearby water bodies (such as rivers, lakes, wetlands, etc.);

   g. Location(s) of municipal storm drain inlets that may receive the facility's industrial storm water discharges and authorized NSWDs;

   h. Locations of storm water collection and conveyance systems and associated points of discharge, and direction of flow;

   i. Any structural control measures (that affect industrial storm water discharges, authorized NSWDs, and run-on)~~.~~;

   j. All impervious areas of the facility, including paved areas, buildings, covered storage areas, or other roofed structures;

   k. Locations where materials are directly exposed to precipitation and the locations where significant spills or leaks identified (Section X.G.1.d of this General Permit) have occurred;

   l. Areas of industrial activity subject to this General Permit;

   m. All storage areas and storage tanks;

   n. Shipping and receiving areas;

   o. Fueling areas;

   p. Vehicle and equipment storage/maintenance areas;

   q. Material handling and processing areas;

DRAFT

r. Waste treatment and disposal areas;

s. Dust or particulate generating areas;

t. Cleaning and material reuse areas; and,

u. Any other areas of industrial activity which may have potential pollutant sources.

I. Obtaining Coverage

To obtain coverage under this General Permit PRDs must be included and completed. If any of the required items are missing, the PRD submittal is considered incomplete and will be rejected. Upon receipt of a complete PRD submittal, the State Water Board will process the application package in the order received and assign a (WDID) number.

J. Additional Information

The Water Board may require the submittal of additional information in SMARTS if required to determine the appropriate fee for the facility as specified by the fee regulations.

K. Questions

If you have any questions on completing the PRDs or about SMARTS, please email stormwater@waterboards.ca.gov or call (866) 563-3107.

DRAFT

ATTACHMENT E

LIST OF TOTAL MAXIMUM DAILY LOADS (TMDLS) APPLICABLE TO INDUSTRIAL STORM WATER DISCHARGERS

NATIONAL POLLUTANT DISCHARGE ELIMINATION SYSTEM (NPDES)
GENERAL PERMIT FOR STORM WATER DISCHARGES
ASSOCIATED WITH INDUSTRIAL ACTIVITIES
(GENERAL PERMIT)

The following table contains a list of Regional Water Board adopted and/or US EPA established/approved TMDLs, as of the adoption date of this General Permit, that are applicable to industrial storm water Dischargers. TMDLs adopted/established after the effective date of the General Permit may, at the Water Boards discretion, be included in this General Permit. This General Permit may be reopened to amend TMDL-specific permit requirements in this Attachment E, or to incorporate new TMDLs adopted during the term of this General Permit that include requirements applicable to Dischargers covered by this General Permit.

Water Body	Pollutant
San Francisco Bay Regional Water Quality Control Board	
Napa River	Sediment
Sonoma Creek	Sediment
Los Angeles Regional Water Quality Control Board	
Santa Clara River Reach 3	Chloride
Santa Clara River	Nutrients
Los Angeles River	Metals
Los Angeles River	Nutrients
San Gabriel River	Metals and Selenium
Santa Monica Bay	Nearshore Debris
Machado Lake	Nutrient
Harbor Beaches of Ventura	Bacteria
Ballona Creek	Metals
Ballona Creek Estuary	Toxic Pollutants
Los Angeles Harbor	Bacteria
Marina del Rey Back Basins	Bacteria
Santa Clara River	Bacteria
Walker Creek,	Mercury
Oxnard Drain No. 3	Pesticides, PCBs[1] and Sediment Toxicity
Long Beach City Beaches and Los Angeles River Estuary	Indicator Bacteria
Los Angeles and Long Beach Harbors	Toxic and Metals

[1] Polychlorinated biphenyls

LIST OF TOTAL MAXIMUM DAILY LOADS (TMDLS) APPLICABLE TO INDUSTRIAL STORM WATER DISCHARGERS

Los Angeles Area Lakes	Nitrogen, Phosphorus, Mercury, Trash, Organochlorine Pesticides and PCBs
Santa Monica Bay	DDTs and PCBs
Machado Lake	Toxics
Colorado Lagoon	Pesticides, Polycyclic aromatic hydrocarbons, PCBs, and Metals
Calleguas Creek Watershed	Salts
Calleguas Creek Watershed	Metals and Selenium
Ballona Creek, Ballona Estuary, and Sepulveda Channel	Bacteria
Marina Del Rey Harbor-Back Basins	Copper, Lead, Zinc, and Chlordane, and Total PCBs
Los Cerritos Channel	Metals
Santa Ana Regional Water Quality Control Board	
San Diego Creek and Newport Bay	Toxic Pollutants
San Diego Regional Water Quality Control Board	
Chollas Creek	Diazinon
Chollas Creek	Copper, Lead, and Zinc
Los Peñasquitos Lagoon	Sediment
Rainbow Creek	Total Nitrogen and Total Phosphorus

DRAFT

ATTACHMENT F

EFFLUENT LIMITATION GUIDELINES (ELGs)

NATIONAL POLLUTANT DISCHARGE ELIMINATION SYSTEM (NPDES)
GENERAL PERMIT FOR STORM WATER DISCHARGES
ASSOCIATED WITH INDUSTRIAL ACTIVITIES
(GENERAL PERMIT)

The following Parts of federal regulations at 40 Code of Federal Regulations Chapter I Subchapter N (Subchapter N) contain ELGs approved by US EPA for specific categories of industrial storm water discharges:

Point Source Category	ELGs[1]
Part 411 - Cement Manufacturing	 411.pdf
Part 418 - Fertilizer Manufacturing	 418.pdf
Part 419 - Petroleum Refining	 419.pdf
Part 422 - Phosphate Manufacturing	 422.pdf
Part 423 - Steam Electric Power Generating	 423.pdf

DRAFT

[1] Double-click on the pdf object to view applicable ELGs. If you are having trouble viewing the pdf file, open your pdf reader in a separate window and double-click on the object again.

Point Source Category	ELGs[2]
Part 429 - Wetting of logs at wet deck storage areas	429.pdf
Part 434 - Coal Mining	434.pdf
Part 436 - Mineral Mining And Processing	436.pdf
Part 440 - Ore Mining And Dressing	440.pdf
Part 443 - Paving And Roofing Materials (Tars And Asphalt)	443.pdf
Part 445 - Landfills	445.pdf
Part 449 - Airport Deicing	449.pdf

DRAFT

[2] Double-click on the pdf object to view applicable ELGs. If you are having trouble viewing the pdf file, open your pdf reader in a separate window and double-click on the object again.

New Source Performance Standards

New source performance standards (NSPS) represent the best available demonstrated control technology standards. US EPA has established NSPS guidelines for the industries found in the Table below. The intent of NSPS guidelines is to set effluent limitations that represent state-of-the-art treatment technology for new sources.[3]

Table 1 - Storm Water Specific NSPS Effluent Limitation Guidelines

Regulated Discharge	40 CFR Section	Multi Sector General Permit Sector	NSPS	Date New Source Data Established
Discharge resulting from spray down or intentional wetting of logs as wet deck storage areas	Part 429, Subpart I	A	Yes	1/26/81
Runoff from phosphate fertilizer manufacturing facilities that comes into contact with any raw materials, finished products, by-products or waste products (SIC 2874)	Part 418, Subpart A	C	Yes	4/8/74
Runoff from asphalt emulsion facilities	Part 443, Subpart A	D	Yes	7/28/75
Runoff from materials storage piles at cement manufacturing facilities	Part 411, Subpart C	E	Yes	2/20/74
Mine dewatering discharges at crushed stone, construction sand and gravel, or industrial sand mining facilities	Part 436, Subparts B, C, D	J	No	N/A
Runoff from hazardous waste and non-hazardous waste landfills	Part 445, Subparts A and B	K, L	Yes	2/2/00
Runoff from coal storage piles at steam electric generating facilities	Part 423	O	Yes	11/19/82 & 10/8/74
Discharges from primary airports with over 1,000 annual jet departures that conduct deicing operations.	Part 449, Subpart A	S	Yes	NA

DRAFT

[3] New source means any building, structure, facility, or installation from which there is or may be a "discharge of pollutants," the construction of which commenced: (1) After promulgation of standards of performance under section 306 of CWA which are applicable to such source, or (2) After proposal of standards of performance in accordance with section 306 of CWA which are applicable to such source, but only if the standards are promulgated in accordance with section 306 within 120 days of their proposal as defined in 40 C.F.R section 122.26.

ATTACHMENT G

REQUIREMENTS FOR DISCHARGERS WHO HAVE BEEN GRANTED AN OCEAN PLAN EXCEPTION FOR DISCHARGES TO ASBS

NATIONAL POLLUTANT DISCHARGE ELIMINATION SYSTEM (NPDES)
GENERAL PERMIT FOR STORM WATER DISCHARGES ASSOCIATED
WITH INDUSTRIAL ACTIVITIES
(GENERAL PERMIT)

A. Areas of Special Biological Significance (ASBS)

1. ASBS are defined in the California Ocean Plan as "those areas designated by the State Water Board as ocean areas requiring protection of species or biological communities to the extent that alteration of natural water quality is undesirable."

2. The California Ocean Plan prohibits the discharge of waste to ASBS.

3. The California Ocean Plan authorizes the State Water Board to grant an exception to Ocean Plan provisions where the board determines that the exception will not compromise protection of ocean waters for beneficial uses and the public interest will be served.

4. On March 20, 2012, the State Water Board adopted Resolution 2012-0012 (amended by Resolution 2012-0031 on June 19, 2012) which contained a general exception to the California Ocean Plan for discharges of storm water and non-point sources (ASBS Exception). This resolution also contains the Special Protections that are to be implemented for direct discharges to ASBS. Resolution 2012-0012 is hereby incorporated by reference and its requirements must be complied with by industrial storm water Dischargers discharging directly to ASBS.

5. This General Permit requires Dischargers who have been granted an Ocean Plan exception for discharges to ASBS to comply with the requirements contained in the Special Protections. These requirements are contained below.

B. ASBS Non-Storm Water Discharges

1. The term "ASBS Non-Storm Water Discharges" means any waste discharges from a municipal separate storm sewer system (MS4) or other NPDES permitted storm drain system to an ASBS that are not comprised entirely of storm water.

2. Only the following ASBS Non-Storm Water Discharges are allowed, provided that the discharges are essential for emergency response purposes, structural stability, slope stability or occur naturally:

a. Discharges associated with emergency fire fighting operations.

b. Foundation and footing drains.

c. Water from crawl space or basement pumps.

d. Hillside dewatering.

e. Naturally occurring groundwater seepage via a storm drain.

f. Non-anthropogenic flows from a naturally occurring stream via a culvert or storm drain, as long as there are no contributions of anthropogenic runoff.

3. Authorized ASBS Non- Storm Water Discharges shall not cause or contribute to a violation of the water quality objectives in Chapter II of the Ocean Plan nor alter natural ocean water quality in an ASBS.

4. At the San Clemente Island ASBS, discharges incidental to military training and research, development, test, and evaluation operations are allowed. Discharges incidental to underwater demolition and other in-water explosions are not allowed in the two military closure areas in the vicinity of Wilson Cove and Castle Rock. Discharges must not result in a violation of the water quality objectives, including the protection of the marine aquatic life beneficial use, anywhere in the ASBS.

5. At the San Nicolas Island and Begg Rock ASBS, discharges incidental to military research, development, testing, and evaluation of, and training with, guided missile and other weapons systems, fleet training exercises, small-scale amphibious warfare training, and special warfare training are allowed. Discharges incidental to underwater demolition and other in-water explosions are not allowed. Discharges must not result in a violation of the water quality objectives, including the protection of the marine aquatic life beneficial use, anywhere in the ASBS.

C. ASBS Compliance Plan

1. State Water Board Resolution 2012-0012 grants an exception to the Ocean Plan's prohibition on discharges to ASBS (ASBS Exception) to applicants who were identified as Dischargers of industrial storm water to ASBS (ASBS Dischargers). Each ASBS Discharger shall specifically address the prohibition of ASBS Non-Storm Water Discharges and the requirement to maintain natural water quality for industrial storm water discharges to an ASBS in an ASBS Compliance Plan to be included in the ASBS Discharger's SWPPP. The ASBS Compliance Plan is subject to approval by the Executive Director of the State Water Board. The ASBS Compliance Plan shall include:

a. A map of surface drainage of storm water runoff, showing areas of sheet runoff and priority discharges, and a description of any structural Best Management Practices (BMPs) already employed and/or BMPs to be employed in the future. Priority discharges are those that pose the greatest water quality threat and which are identified as requiring installation of structural BMPs. The map shall also show the storm water conveyances in relation to other features such as service areas, sewage conveyances and treatment facilities, landslides, areas prone to erosion, and waste and hazardous material storage areas, if applicable. The SWPPP shall also include a procedure for updating the map and plan when changes are made to the storm water conveyance facilities.

b. A description of the measures by which all unauthorized ASBS Non-Storm Water Discharges (e.g., dry weather flows) has been eliminated, how these measures will be maintained over time, and how these measures are monitored and documented.

c. A description of how pollutant reductions in storm water runoff, that are necessary to comply with these special conditions, will be achieved through BMPs. Structural BMPs need not be installed if the Discharger can document to the satisfaction of the Executive Director that such installation would pose a threat to health or safety. BMPs to control storm water runoff discharges (at the end-of-pipe) during a design storm shall be designed to achieve on average the following target levels:

   1) Table B Instantaneous Maximum Water Quality Objectives in Chapter II of the Ocean Plan; or

   2) A 90% reduction in pollutant loading during storm events, for the applicant's total discharges.

      The baseline date for the reduction is March 20, 2012 (the effective date of the ASBS Exception), except for those structural BMPs installed between January 1, 2005 and the adoption of these special protections. The reductions must be achieved and documented by March 20, 2018.

d. A description of how the ASBS Discharger will address erosion and the prevention of anthropogenic sedimentation in the ASBS. The natural habitat conditions in the ASBS shall not be altered as a result of anthropogenic sedimentation.

e. A description of the non-structural BMPs currently employed and planned in the future (including those for construction activities), and include an implementation schedule. The ASBS Compliance Plan shall also describe the structural BMPs, including any low impact development (LID) measures, currently employed and planned for higher threat discharges and include an

implementation schedule. To control storm water runoff discharges (at the end-of-pipe) during a design storm, ASBS Dischargers must first consider using LID practices to infiltrate, use, or evapotranspiration storm water runoff on-site. The BMPs and implementation schedule shall be designed to ensure that natural water quality conditions in the receiving water are achieved and maintained by either reducing flows from impervious surfaces or reducing pollutant loading, or some combination thereof.

D. Reporting

If the results of the receiving water monitoring described in Section F. below (Sampling and Analysis Requirements) indicate that the storm water runoff is causing or contributing to an alteration of natural ocean water quality in the ASBS, the ASBS Discharger shall submit a report to the State Water Board within 30 days of receiving the results.

1. The report shall identify the constituents in storm water runoff that alter natural ocean water quality and the sources of these constituents.

2. The report shall describe BMPs that are currently being implemented, BMPs that are identified in the SWPPP for future implementation, and any additional BMPs that may be added to the SWPPP to address the alteration of natural water quality. The report shall include a new or modified implementation schedule for the BMPs.

3. Within 30 days of the approval of the report by the Executive Director, the ASBS Discharger shall revise its ASBS Compliance Plan to incorporate any new or modified BMPs that have been or will be implemented, the implementation schedule, and any additional monitoring required.

4. As long as the ASBS Discharger has complied with the procedures described above and is implementing the revised SWPPP, the Discharger does not have to repeat the same procedure for continuing or recurring exceedances of natural ocean water quality conditions due to the same constituent.

5. Compliance with this section does not excuse violations of any term, prohibition, or special condition contained in the Special Protections of the ASBS Exception.

E. Compliance Schedule

1. As of March 20, 2012, all unauthorized ASBS Non-Storm Water Discharges (e.g., dry weather flow) were effectively prohibited.

2. By September 20, 2013, the Discharger shall submit a draft written ASBS Compliance Plan to the Executive Director that describes its strategy to comply with these special conditions, including the requirement to maintain natural water

quality in the affected ASBS. The ASBS Compliance Plan shall include a description of appropriate non-structural controls and a time schedule to implement structural controls (implementation schedule) to comply with these special conditions for inclusion in the Discharger's SWPPP.

3. By September 20, 2014, the Discharger shall submit the final ASBS Compliance Plan, including a description and final schedule for structural controls based on the results of runoff and receiving water monitoring.

4. By September 20, 2013, any non-structural controls that are necessary to comply with these special conditions shall be implemented.

5. By March 20, 2018, any structural controls identified in the ASBS Compliance Plan that are necessary to comply with these special conditions shall be operational.

6. By March 20, 2018, all Dischargers must comply with the requirement that their discharges into the affected ASBS maintain natural ocean water quality. If the initial results of post-storm receiving water quality testing indicate levels higher than the 85th percentile threshold of reference water quality data and the pre-storm receiving water levels, then the Discharger must re-sample the receiving water, pre- and post-storm. If after re-sampling the post-storm levels are still higher than the 85th percentile threshold of reference water quality data, and the pre-storm receiving water levels, for any constituent, then natural ocean water quality is exceeded. See Flowchart at the end of this Attachment.

7. The Executive Director may only authorize additional time to comply with the special conditions 5 and 6, above if good cause exists to do so. Good cause means a physical impossibility or lack of funding

   If a Discharger claims physical impossibility, it shall notify the Board in writing within thirty (30) days of the date that the Discharger first knew of the event or circumstance that caused or would cause it to fail to meet the deadline in 5. or 6. The notice shall describe the reason for the noncompliance or anticipated noncompliance and specifically refer to this Section of these requirements. It shall describe the anticipated length of time the delay in compliance may persist, the cause or causes of the delay as well as measures to minimize the impact of the delay on water quality, the measures taken or to be taken by the Discharger to prevent or minimize the delay, the schedule by which the measures will be implemented, and the anticipated date of compliance. The Discharger shall adopt all reasonable measures to avoid and minimize such delays and their impact on water quality.

   The Discharger may request an extension of time for compliance based on lack of funding. The request for an extension shall require:

a. for municipalities, a demonstration of significant hardship to Discharger ratepayers, by showing the relationship of storm water fees to annual household income for residents within the Discharger's jurisdictional area, and the Discharger has made timely and complete applications for all available bond and grant funding, and either no bond or grant funding is available, or bond and/or grant funding is inadequate; or

b. for other governmental agencies, a demonstration and documentation of a good faith effort to acquire funding through that agency's budgetary process, and a demonstration that funding was unavailable or inadequate.

F. Additional Requirements – Waterfront and Marine Operations

In addition to the above provisions, a Discharger with waterfront and marine operations shall comply with the following:

1. For discharges related to waterfront and marine operations, the Discharger shall develop a Waterfront and Marine Operations Management Plan (Waterfront Plan). This plan shall contain appropriate Management Measures/Practices to address nonpoint source pollutant discharges to the affected ASBS.

   a. The Waterfront Plan shall contain appropriate Management Measures/Practices for any waste discharges associated with the operation and maintenance of vessels, moorings, piers, launch ramps, and cleaning stations in order to ensure that beneficial uses are protected and natural water quality is maintained in the affected ASBS.

   b. For discharges from marinas and recreational boating activities, the Waterfront Plan shall include appropriate Management Measures, described in The Plan for California's Nonpoint Source Pollution Control Program, for marinas and recreational boating, or equivalent practices, to ensure that nonpoint source pollutant discharges do not alter natural water quality in the affected ASBS.

   c. The Waterfront Plan shall include Management Practices to address public education and outreach to ensure that the public is adequately informed that waste discharges to the affected ASBS are prohibited or limited by special conditions in these Special Protections. The management practices shall include appropriate signage, or similar measures, to inform the public of the ASBS restrictions and to identify the ASBS boundaries.

   d. The Waterfront Plan shall include Management Practices to address the prohibition against trash discharges to ASBS. The Management Practices shall include the provision of adequate trash receptacles for marine recreation areas, including parking areas, launch ramps, and docks. The plan shall also include appropriate Management Practices to ensure that the receptacles are

adequately maintained and secured in order to prevent trash discharges into the ASBS. Appropriate Management Practices include covering the trash receptacles to prevent trash from being windblown, staking or securing the trash receptacles so they don't tip over, and periodically emptying the receptacles to prevent overflow.

e. The Discharger shall submit its Waterfront Plan to the State Water Board Executive Director by September 20, 2012. The Waterfront Plan is subject to approval by the State Water Board Executive Director. The plan must be fully implemented within by September 20, 2013.

2. The discharge of chlorine, soaps, petroleum, other chemical contaminants, trash, fish offal, or human sewage to ASBS is prohibited. Sinks and fish cleaning stations are point source discharges of wastes and are prohibited from discharging into ASBS. Anthropogenic accumulations of discarded fouling organisms on the sea floor must be minimized.

3. Limited-term activities, such as the repair, renovation, or maintenance of waterfront facilities, including, but not limited to, piers, docks, moorings, and breakwaters, are authorized only in accordance with Chapter III.E.2 of the Ocean Plan.

4. If the Discharger anticipates that the Discharger will fail to fully implement the approved Waterfront Plan within the 18 month deadline, the Discharger shall submit a technical report as soon as practicable to the Executive Director. The technical report shall contain reasons for failing to meet the deadline and propose a revised schedule to fully implement the plan.

5. The State Water Board may, for good cause, authorize additional time to comply with the Waterfront Plan. Good cause means a physical impossibility or lack of funding.

   If a Discharger claims physical impossibility, it shall notify the Board in writing within thirty (30) days of the date that the Discharger first knew of the event or circumstance that caused or would cause it to fail to meet the deadline in Section F.1.e above. The notice shall describe the reason for the noncompliance or anticipated noncompliance and specifically refer to this Section of this Attachment. It shall describe the anticipated length of time the delay in compliance may persist, the cause or causes of the delay as well as measures to minimize the impact of the delay on water quality, the measures taken or to be taken by the Discharger to prevent or minimize the delay, the schedule by which the measures will be implemented, and the anticipated date of compliance. The Discharger shall adopt all reasonable measures to avoid and minimize such delays and their impact on water quality. The Discharger may request an extension of time for compliance based on lack of funding. The request for an extension shall require:

a. a demonstration of significant hardship by showing that the Discharger has made timely and complete applications for all available bond and grant funding, and either no bond or grant funding is available, or bond and/or grant funding is inadequate.

b. for governmental agencies, a demonstration and documentation of a good faith effort to acquire funding through that agency's budgetary process, and a demonstration that funding was unavailable or inadequate.

G. Sampling and Analysis Requirements

1. Monitoring is mandatory for all ASBS Dischargers to assure compliance with the Ocean Plan. Monitoring requirements include both: (1) Core Discharge Monitoring and (2) Ocean Receiving Water Monitoring (see Sections H. and I. below). The State and Regional Water Boards must approve sampling site locations and any adjustments to the monitoring programs. All ocean receiving water and reference area monitoring must be comparable with the Water Boards' Surface Water Ambient Monitoring Program (SWAMP).

2. Safety concerns: Sample locations and sampling periods must be determined considering safety issues. Sampling may be postponed upon notifying the Executive Director that hazardous conditions prevail.

3. Analytical Chemistry Methods: All constituents must be analyzed using the lowest minimum detection limits comparable to the Ocean Plan water quality objectives. For metal analysis, all samples, including storm water effluent, reference samples, and ocean receiving water samples, must be analyzed by the approved analytical method with the lowest minimum detection limits (currently Inductively Coupled Plasma/Mass Spectrometry) described in the Ocean Plan.

H. Core Discharge Monitoring Program

1. General sampling requirements for timing and storm size:

   Runoff must be collected during a storm event that is greater than 0.1 inch and generates runoff, and at least 72 hours from the previously measurable storm event. Runoff samples shall be collected during the same storm and at approximately the same time when post-storm receiving water is sampled, and analyzed for the same constituents as receiving water and reference site samples as described in Section I. below.

2. Runoff flow measurements

   a. For industrial storm water outfalls in existence as of December 31, 2007, 18 inches (457mm) or greater in diameter/width (including multiple outfall pipes in combination having a width of 18 inches, runoff flows must be

measured or calculated, using a method acceptable to and approved by the Executive Director.

b. This will be reported annually for each precipitation season to the Executive Director.

3. Runoff samples – storm events

a. For outfalls equal to or greater than 18 inches (0.46m) in diameter or width: 1) samples of storm water runoff shall be collected during the same storm as receiving water samples and analyzed for oil and grease, total suspended solids, and, if within the range of the southern sea otter, indicator bacteria or some other measure of fecal contamination; and 2) samples of storm water runoff shall be collected and analyzed for critical life stage chronic toxicity (one invertebrate or algal species) at least once during each storm season when receiving water is sampled in the ASBS.

b. For outfalls equal to or greater than 36 inches (0.91m) in diameter or width:

1) samples of storm water runoff shall be collected during the same storm as receiving water samples and analyzed for oil and grease, total suspended solids, and, if within the range of the southern sea otter, indicator bacteria or some other measure of fecal contamination; and

2) samples of storm water runoff shall be further collected during the same storm as receiving water samples and analyzed for Ocean Plan Table B metals (provided at the end of this Attachment) for protection of marine life, Ocean Plan polynuclear aromatic hydrocarbons (PAHs), current use pesticides (pyrethroids and OP pesticides), and nutrients (ammonia, nitrate and phosphates); and

3) samples of storm water runoff shall be collected and analyzed for critical life stage chronic toxicity (one invertebrate or algal species) at least once during each storm season when receiving water is sampled in the ASBS.

4) if an ASBS Discharger has no outfall greater than 36 inches, then storm water runoff from the applicant's largest outfall shall be further collected during the same storm as receiving water samples and analyzed for Ocean Plan Table B metals (provided at the end of this Attachment) for protection of marine life, Ocean Plan polynuclear aromatic hydrocarbons (PAHs), current use pesticides (pyrethroids and OP pesticides), and nutrients (ammonia, nitrate and phosphates).

c. For an applicant not participating in a regional integrated monitoring program [see below in Section I.3.] in addition to the sampling requirements in Section H.3.a. and b. above, a minimum of the two largest outfalls or 20 percent of the

larger outfalls, whichever is greater, shall be sampled (flow weighted composite samples) at least three times annually during wet weather (storm event) and analyzed for all Ocean Plan Table A constituents, Table B constituents (Table A and B constituents are provided at the end of this Attachment) for marine aquatic life protection (except for toxicity, only chronic toxicity for three species shall be required), DDT, PCBs, Ocean Plan PAHs, OP pesticides, pyrethroids, nitrates, phosphates, and Ocean Plan indicator bacteria. For parties discharging to ASBS in more than one Regional Water Board region, at a minimum, one (the largest) such discharge shall be sampled annually in each Region.

d. The Executive Director may reduce or suspend core monitoring once the storm runoff is fully characterized. This determination may be made at any point after the discharge is fully characterized, but is best made after the monitoring results from the first permit cycle are assessed.

I. Ocean Receiving Water and Reference Area Monitoring Program

1. In addition to performing the Core Discharge Monitoring Program in Section H. above, all ASBS Dischargers must perform ocean receiving water monitoring. In order to fulfill the requirements for monitoring the physical, chemical, and biological characteristics of the ocean receiving waters within their ASBS, ASBS Dischargers may choose either (1) an individual monitoring program, or (2) participation in a regional integrated monitoring program.

2. Individual Monitoring Program: The requirements listed below are for those ASBS Dischargers who elect to perform an individual monitoring program to fulfill the requirements for monitoring the physical, chemical, and biological characteristics of the ocean receiving waters within the affected ASBS. In addition to Core Discharge Monitoring, the following additional monitoring requirements shall be met:

   a. Three times annually, during wet weather (storm events), the receiving water at the point of discharge from the outfalls described in Section H.3. above shall be sampled and analyzed for Ocean Plan Table A constituents, Table B constituents (Table A and B constituents are provided at the end if this Attachment) for marine aquatic life, DDT, PCBs, Ocean Plan PAHs, OP pesticides, pyrethroids, nitrates, phosphates, salinity, chronic toxicity (three species), and Ocean Plan indicator bacteria.

      The sample location for the ocean receiving water shall be in the surf zone at the point of discharges; this must be at the same location where storm water runoff is sampled. Receiving water shall be sampled prior to (pre-storm), and during (or immediately after) the same storm (post-storm). Post-storm sampling shall be during the same storm and at approximately the same time as when the runoff is sampled. Reference water quality shall also be

sampled three times annually and analyzed for the same constituents pre-storm and post-storm, during the same storm seasons when receiving water is sampled. Reference stations will be determined by the State Water Board's Division of Water Quality and the applicable Regional Water Board(s).

b. Sediment sampling shall occur at least three times during every five (5) year period. The subtidal sediment (sand or finer, if present) at the discharge shall be sampled and analyzed for Ocean Plan Table B constituents (provided at the end of this Attachment) for marine aquatic life, DDT, PCBs, PAHs, pyrethroids, and OP pesticides. For sediment toxicity testing, only an acute toxicity test using the amphipod Eohaustorius estuarius must be performed.

c. A quantitative survey of intertidal benthic marine life shall be performed at the discharge and at a reference site. The survey shall be performed at least once every five (5) year period. The survey design is subject to approval by the Regional Water Board and the State Water Board's Division of Water Quality. The results of the survey shall be completed and submitted to the State Water Board and Regional Water Board at least six months prior to the end of the permit cycle.

d. Once during each five (5) year period, a bioaccumulation study shall be conducted to determine the concentrations of metals and synthetic organic pollutants at representative discharge sites and at representative reference sites. The study design is subject to approval by the Regional Water Board and the State Water Board's Division of Water Quality. The bioaccumulation study may include California mussels (Mytilus californianus) and/or sand crabs (Emerita analoga or Blepharipoda occidentalis). Based on the study results, the Regional Water Board and the State Water Board's Division of Water Quality, may adjust the study design in subsequent permits, or add or modify additional test organisms (such as shore crabs or fish), or modify the study design appropriate for the area and best available sensitive measures of contaminant exposure.

e. Marine Debris: Representative quantitative observations for trash by type and source shall be performed along the coast of the ASBS within the influence of the ASBS Discharger's outfalls. The design, including locations and frequency, of the marine debris observations is subject to approval by the Regional Water Board and State Water Board's Division of Water Quality.

f. The monitoring requirements of the Individual Monitoring Program in this Section are minimum requirements. After a minimum of one (1) year of continuous water quality monitoring of the discharges and ocean receiving waters, the Executive Director of the State Water Board may require additional monitoring, or adjust, reduce or suspend receiving water and reference station monitoring. This determination may be made at any point

DRAFT

after the discharge and receiving water is fully characterized, but is best made after the monitoring results from the first permit cycle are assessed.

3. Regional Integrated Monitoring Program: ASBS Dischargers may elect to participate in a regional integrated monitoring program, in lieu of an individual monitoring program, to fulfill the requirements for monitoring the physical, chemical, and biological characteristics of the ocean receiving waters within their ASBS. This regional approach shall characterize natural water quality, pre- and post-storm, in ocean reference areas near the mouths of identified open space watersheds and the effects of the discharges on natural water quality (physical, chemical, and toxicity) in the ASBS receiving waters, and should include benthic marine aquatic life and bioaccumulation components. The design of the ASBS stratum of a regional integrated monitoring program may deviate from the otherwise prescribed individual monitoring approach (in Section I.2.) if approved by the State Water Board's Division of Water Quality and the Regional Water Boards.

   a. Ocean reference areas shall be located at the drainages of flowing watersheds with minimal development (in no instance more than 10% development), and shall not be located in CWA Section 303(d) listed waterbodies or have tributaries that are 303(d) listed. Reference areas shall be free of wastewater discharges and anthropogenic non-storm water runoff. A minimum of low threat storm runoff discharges (e.g. stream highway overpasses and campgrounds) may be allowed on a case-by-case basis. Reference areas shall be located in the same region as the ASBS receiving water monitoring occurs. The reference areas for each Region are subject to approval by the participants in the regional integrated monitoring program, the State Water Board's Division of Water Quality and the applicable Regional Water Board(s). A minimum of three ocean reference water samples must be collected from each station, each from a separate storm during the same storm season that receiving water is sampled. A minimum of one reference location shall be sampled for each ASBS receiving water site sampled per responsible party. For parties discharging to ASBS in more than one Regional Water Board region, at a minimum, one reference station and one receiving water station shall be sampled in each region.

   b. ASBS ocean receiving water must be sampled in the surf zone at the location where the runoff makes contact with ocean water (i.e. at "point zero"). Ocean receiving water stations must be representative of worst-case discharge conditions (i.e. co-located at a large drain greater than 36 inches, or if drains greater than 36 inches are not present in the ASBS then the largest drain greater than18 inches.) Ocean receiving water stations are subject to approval by the participants in the regional monitoring program and the State Water Board's Division of Water Quality and the applicable Regional Water Board(s). A minimum of three ocean receiving water samples must be collected during each storm season from each station, each from a separate

storm. A minimum of one receiving water location shall be sampled in each ASBS per responsible party in that ASBS. For parties discharging to ASBS in more than one Regional Water Board region, at a minimum, one reference station and one receiving water station shall be sampled in each region.

c. Reference and receiving water sampling shall commence during the first full storm season following the adoption of these special conditions, and post-storm samples shall be collected during the same storm event when storm water runoff is sampled. Sampling shall occur in a minimum of two storm seasons. For those ASBS Dischargers that have already participated in the Southern California Bight 2008 ASBS regional monitoring effort, sampling may be limited to only one storm season.

d. Receiving water and reference samples shall be analyzed for the same constituents as storm water runoff samples. At a minimum, constituents to be sampled and analyzed in reference and discharge receiving waters must include oil and grease, total suspended solids, Ocean Plan Table B metals (provided at the end of this Attachment) for protection of marine life, Ocean Plan PAHs, pyrethroids, OP pesticides, ammonia, nitrate, phosphates, and critical life stage chronic toxicity for three species. In addition, within the range of the southern sea otter, indicator bacteria or some other measure of fecal contamination shall be analyzed.

DRAFT

REQUIREMENTS FOR DISCHARGERS WHO HAVE BEEN GRANTED AN OCEAN PLAN EXCEPTION FOR DISCHARGES TO ASBS

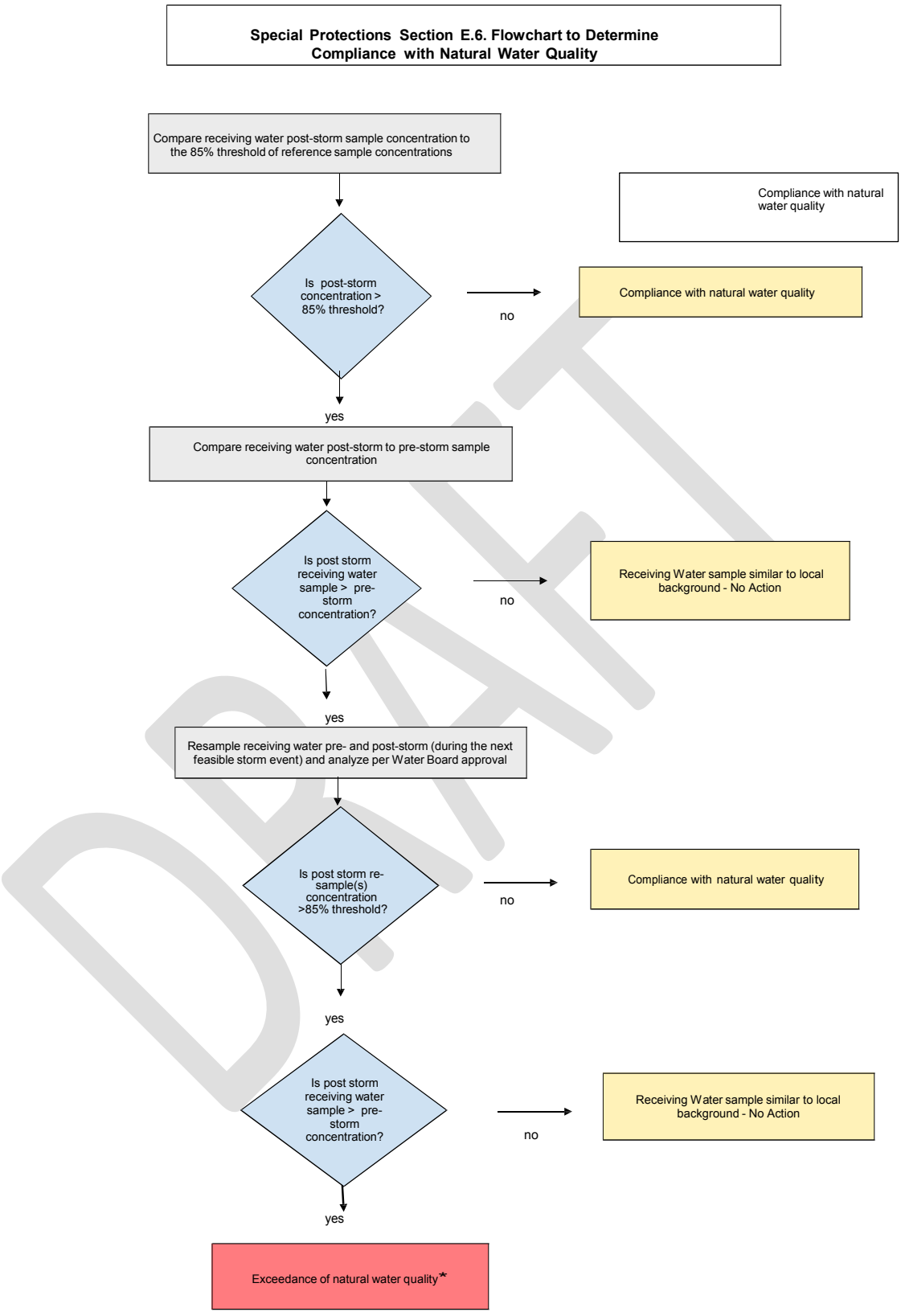

* When an exceedance of natural water quality occurs, the Discharger must comply with Section D. Note, when sampling data is available, end-of-pipe effluent concentrations will be considered by the Water Boards in making this determination.

ASBS Monitoring

TABLE A
Monitoring Constituent List
(excerpted from California Ocean Plan dated 2009)

Constituent	Units
Grease and Oil	mg/L
Suspended Solids	Mg/L
Settleable Solids	mL/L
Turbidity	NTU
PH	

TABLE B
Monitoring Constituent List
(Excerpted from California Ocean Plan dated 2009)

Constituent	Units
Arsenic	µg/L
Cadmium	µg/L
Chromium	µg/L
Copper	µg/L
Lead	µg/L
Mercury	µg/L
Nickel	µg/L
Selenium	µg/L
Silver	µg/L
Zinc	µg/L
Cyanide	µg/L
Total Chlorine Residual	µg/L
Ammonia (as N)	µg/L
Acute Toxicity	TUa
Chronic Toxicity	TUc
Phenolic Compounds (non-chlorinated)	µg/L
Chlorinated Phenolics	µg/L
Endosulfan	µg/L
Endrin	µg/L
HCH	µg/L

Analytical Chemistry Methods: All constituents shall be analyzed using the lowest minimum detection limits comparable to the Ocean Plan water quality objectives. For metal analysis, all samples, including storm water effluent, reference samples, and ocean receiving water samples, shall be analyzed by the approved analytical method with the lowest minimum detection limits (currently Inductively Coupled Plasma/Mass Spectrometry) described in the Ocean Plan.

ATTACHMENT H

SAMPLE COLLECTION AND HANDLING INSTRUCTIONS

NATIONAL POLLUTANT DISCHARGE ELIMINATION SYSTEM (NPDES)
GENERAL PERMIT FOR STORM WATER DISCHARGES
ASSOCIATED WITH INDUSTRIAL ACTIVITIES
(GENERAL PERMIT)

For more detailed guidance, Dischargers should refer to the U.S. EPA's "Industrial Stormwater Monitoring and Sampling Guide," dated March 2009, available at: http://www.epa.gov/npdes/pubs/msgp_monitoring_guide.pdf and the "NPDES Storm Water Sampling Guidance Document," dated July 1992, available at: http://www.epa.gov/npdes/pubs/owm0093.pdf .

1. Identify the sampling parameters required to be tested and the number of storm water discharge points that will be sampled. Request the analytical testing laboratory to provide the appropriate number and type of sample containers, sample container labels, blank chain of custody forms, and sample preservation instructions.

2. Determine how samples will be transported to the laboratory. The testing laboratory should receive samples within 48 hours of the physical sampling (unless otherwise required by the laboratory). The Discharger may either deliver the samples to the laboratory, arrange for the laboratory to pick up the samples, or overnight ship the samples to the laboratory. All sample analysis shall be done in accordance with 40 Code of Federal Regulations part 136. Samples for pH have a holding time of 15 minutes.[1]

3. Qualified Combined Samples ~~(QCS)~~ shall be combined by the laboratory and not by the Discharger. Sample bottles must be appropriately labeled to instruct the laboratory on which samples to combine.

4. Unless the Discharger can provide flow weighted information, all combined samples shall be volume weighted.

5. For grab samples, ~~U~~use only the sample containers provided by the laboratory to collect and store samples. Use of any other type of containers may contaminate samples.

6. For automatic samplers that are not compatible with bottles provided by the laboratory, the Discharger is required to send the sample container included with the automatic sampler to the laboratory for analysis.

[1] 40 C.F.R. section 136.3, Table II - Required Containers, Preservation Techniques, and Holding Times.

7. The Discharger can only use automatic sampling device to sample parameters that the device is designed to. For pH, Dischargers can only use automatic sampling devices with the ability to read pH within 5 minutes of sample collection.

8. The Discharger is prohibited from using an automatic sampling device for Oil and Grease, unless the automatic sampling device is specifically designed to sample for Oil and Grease.

9. To prevent contamination, do not touch inside of sample container or cap or put anything into the sample containers before collecting storm water samples.

10. Do not overfill sample containers. Overfilling can change the analytical results.

11. Tightly screw on the cap of each sample container without stripping the threads of the cap.

12. Complete and attach a label for each sample container. The label shall identify the date and time of sample collection, the person taking the sample, and the sample collection location or discharge point. The label should also identify any sample containers that have been preserved.

13. Carefully pack sample containers into an ice chest or refrigerator to prevent breakage and maintain temperature during shipment. Remember to place frozen ice packs into shipping containers. Samples should be kept as close to 4 degrees Celsius (39 degrees Fahrenheit) as possible until arriving to the laboratory. Do not freeze samples.

14. Complete a Chain of Custody form for each set of samples. The Chain of Custody form shall include the Discharger's name, address, and phone number, identification of each sample container and sample collection point, person collecting the samples, the date and time each sample container was filled, and the analysis that is required for each sample container.

15. Upon shipping/delivering the sample containers, obtain both the signatures of the persons relinquishing and receiving the sample containers.

16. Dischargers shall designate and train personnel to collect, maintain, and ship samples in accordance with the sample protocols and laboratory practices.

17. Refer to Table 1 in the General Permit for test methods, detection limits, and reporting units.

18. All sampling and sample preservation shall be in accordance with 40 Code of Federal Regulations part 136 and the current edition of "Standard Methods for the Examination of Water and Wastewater" (American Public Health

Association). All monitoring instruments and equipment (including Discharger field instruments for measuring pH or specific conductance if identified as an additional sampling parameter) shall be calibrated and maintained in accordance with manufacturers' specifications to ensure accurate measurements. All laboratory analyses shall be conducted according to approved test procedures under 40 Code of Federal Regulations part 136, unless other test procedures have been specified by the Regional Water Quality Control Board. All metals shall be reported as total metals. Dischargers may conduct their own field analysis of pH (or specific conductance if identified as an additional sampling parameter) if the Discharger has sufficient capability (qualified and trained employees, properly calibrated and maintained field instruments, etc.) to adequately perform the field analysis. With the exception of field analysis conducted by Dischargers for pH (or specific conductance if identified as an additional sampling parameter), all analyses shall be sent to and conducted at a laboratory certified for such analyses by the California Department of Public Health. Dischargers are required to report to the Water Board any sampling data collected more frequently than required in this General Permit (Section XXI.J.2)

DRAFT

APPENDIX 1

STORM WATER POLLUTION PREVENTION PLAN (SWPPP) CHECKLIST

NATIONAL POLLUTION DISCHARGE ELIMINTATION SYSTEM (NPDES)
GENERAL PERMIT FOR STORM WATER DISCHARGES
ASSOCIATED WITH INDUSTRIAL ACTIVITIES
(GENERAL PERMIT)

FACILITY NAME:_____

Waste Discharge Identification (WDID) #:_____

	FACILITY CONTACT	**Consultant/Qualified Industrial Storm Water Practitioner (QISP)**
Name		
Title		
Company		
Street Address		
City, State		
Zip		

SWPPP (General Permit Section)	**Not Applicable**	**SWPPP Page # or Reference Location**	**Date Implemented or Last Revised**
Signed Certification (Section II.A)			
Pollution Prevention Team (Section X.D.1)			
Existing Facility Plans (Section X.D.2)			
Site Map(s) (Section X.E)			
Facility boundaries (Section X.E.3.a)			
Drainage areas (Section X.E.3.a)			
Direction of flow (Section X.E.3.a)			
On-facility water bodies (Section X.E.3.a)			

STORM WATER POLLUTION PREVENTION PLAN (SWPPP) CHECKLIST

SWPPP (General Permit Section)	Not Applicable	SWPPP Page # or Reference Location	Date Implemented or Last Revised
Areas of soil erosion (Section X.E.3.a)			
Nearby water bodies (Section X.E.3.a)			
Municipal storm drain inlets (Section X.E.3.a)			
Points of discharge (Section X.E.3.b)			
Sampling Locations (Section X.E.3.b)			
Structural control measures (Section X.E.3.~~b~~c)			
Impervious areas (Section X.E.3.~~c~~d)			
Location of Directly Exposed Materials (Section ~~VIII~~X.E.3.~~d~~e)			
Locations of significant spills and leaks (Section X.E.3.~~d~~e)			
Areas of Industrial Activity (Section ~~VIII~~X.E.3.f)			
Areas of industrial activity (Section X.E.3.~~e~~f)			
Storage areas/storage tanks (Section X.E.3.~~e~~f)			
Shipping and receiving areas (Section X.E.3.~~e~~f)			
Fueling areas (Section X.E.3.~~e~~f)			
Vehicle and equipment storage/maintenance (Section X.E.3.~~e~~f)			
Material handling/processing (Section X.E.3.~~e~~f)			
Waste treatment/disposal (Section X.E.3.f)			
~~**Waste Treatment/Disposal (Section VIII.E.3.e)**~~			
Dust or particulate generation (Section X.E.3.~~e~~f)			

DRAFT

STORM WATER POLLUTION PREVENTION PLAN (SWPPP) CHECKLIST

SWPPP (General Permit Section)	Not Applicable	SWPPP Page # or Reference Location	Date Implemented or Last Revised
Cleaning and material reuse (Section X.E.3.~~e~~f)			
Other areas of industrial activities (Section X.E.3.~~e~~f)			
List of ~~Significant~~ Industrial Materials (Section X.F)			
Storage location			
Quantity			
Frequency			
Receiving and shipping location			
Quantity			
Frequency			
Handling location			
Quantity			
Frequency			
Potential Pollution Sources (Section X.G)			
Description of Potential Pollution Sources (Section X.G.1)			
Industrial processes (Section X.G.1.a)			
Material handling and storage areas (Section X.G.1.b)			
Dust & particulate generating activities (Section X.G.1.c)			
Significant spills and leaks (Section X.G.1.d)			
Non-storm water discharges (Section X.G.1.e)			
Erodible surfaces (Section X.G.1.f)			
Assessment of Potential Pollutant Sources (Section X.G.2)			
Narrative assessment of likely sources of pollutants (Section X.G.2.a)			
Narrative assessment of likely pollutants present in storm water discharges (Section X.G.2.a)			

DRAFT

STORM WATER POLLUTION PREVENTION PLAN (SWPPP) CHECKLIST

SWPPP (General Permit Section)	Not Applicable	SWPPP Page # or Reference Location	Date Implemented or Last Revised
Identification of additional BMPs Section X.G.2.b)			
Identification of drainage areas with no exposure (Section X.G.2.c)			
Identification of additional parameters (Section X.G.2.d)			
Storm Water Best Management Practices (Section X.H)			
Minimum BMPs (Section X.H.1)			
Good housekeeping (Section X.H.1.a~~b~~)			
Preventative maintenance (Section X.H.1.~~c~~b)			
Spill response (Section X.H.1.~~d~~c)			
Material handling and waste management (Section X.H.1.~~e~~d)			
Erosion and sediment controls (Section X.H.1.~~f~~e)			
Employee training program (Section X.H.1.~~g~~f)			
Quality assurance and record keeping (Section X.H.1.~~h~~g)			
Advanced BMPs (Section X.H.2)			
Implement advanced BMPs at the facility (Section X.H.2.a)			
Exposure Minimization BMPs (Section X.H.2.b.i)			
Storm Water containment and discharge reduction BMPS (Section X.H.2.b.ii)			
Treatment Control BMPs (Section X.H.2.b.iii)			
Other advance BMPs (Section X.H.2.b.iv)			
Temporary Suspension of Activities (Section X.H.3)			
BMPs necessary for stabilization of the facility (Section X.H.3)			

DRAFT

STORM WATER POLLUTION PREVENTION PLAN (SWPPP) CHECKLIST

SWPPP (General Permit Section)	Not Applicable	SWPPP Page # or Reference Location	Date Implemented or Last Revised
BMP Descriptions (Section X.H.4.a)			
Pollutant that a BMP reduces or prevents (Section X.H.4.a.i)			
Frequency of BMP implementation (Section X.H.4.a.ii)			
Location of BMP (Section X.H.4.a.iii)			
Person implementing BMP (Section X.H.4.a.iv)			
Procedures/maintenance/ instructions for BMP implementation (Section X.H.4.a.v)			
Equipment and tools for BMP implementation (Section X.H.4.a.vi)			
BMPs that may haveneeding more frequent inspections (Section X.H.4.a.vii)			
Minimum BMP/applicable advanced BMPs not being implemented at the facility (Section X.H.4.b)			
BMPs implemented in lieu of any of the minimum or applicable advanced BMPs (Section X.H.4.c)			
BMP Summary Table (Section X.H.5)			
Monitoring Implementation Plan (MIP) (Section X.I)			
Team members assisting in developing the MIP (Section X.I.1)			
Summary of visual observation procedures, locations, and details (Section X.I.2)			
Justifications if applicable for: Alternative discharge locations, Representative Sampling Reduction or, Qualified Combined Samples (Section X.I.3)			
Procedures for field instrument calibration (Section X.I.34)			

DRAFT

STORM WATER POLLUTION PREVENTION PLAN (SWPPP) CHECKLIST

SWPPP (General Permit Section)	Not Applicable	SWPPP Page # or Reference Location	Date Implemented or Last Revised
Example of Chain of Custody (Section X.I.45)			
Annual Comprehensive FacilitySite Compliance Evaluation (Section XV)			
Review of all visual inspection and monitoring records and sampling and analysis results conducted during the previous reporting year (Section XV.1A)			
Visual inspection of all areas of industrial activity and associated potential pollutant sources (Section XV.2B)			
Visual inspection of all drainage areas previously identified as having no-exposure to industrial activities and materials in accordance with the definitions in Section XVII (Section XV.3C)			
Visual inspection of equipment needed to implement the BMPs (Section XV.4D)			
Visual inspection of any structural and/or treatment control BMPs (Section XV.5E)			
Review and assessment of all BMPs for each area of industrial activity and associated potential pollutant sources (Section XV.6F)			
Assessment of other factors needed to complete the information described in Section XVI.B (Section XV.7G)			

DRAFT

APPENDIX 2

INSTRUCTIONS FOR NO EXPOSURE CERTIFICATION (NEC)

NATIONAL POLLUTANT DISCHARGE ELIMINATION SYSTEM (NPDES)
GENERAL PERMIT FOR STORM WATER DISCHARGES ASSOCIATED WITH INDUSTRIAL ACTIVITIES
(GENERAL PERMIT)

This Attachment provides general guidance instructions and guidance for obtaining NEC coverage. The actual NEC requirements are primarily contained in Section XVII of this General Permit.

A. INSTRUCTIONS:

Who May File for NEC Coverage

Sections 301 and 402(p) of the Clean Water Act (CWA), and Sections 1311 and 1342(p) of 33 United~~.~~ States~~.~~ Code~~.~~ prohibit the discharge of storm water associated with industrial activity to waters of the United States without a National Pollutant Discharge Elimination System (NPDES) permit. However, NPDES permit coverage is "conditionally excluded" for discharges of storm water associated with industrial activities (industrial storm water discharges) if the Discharger can certify that a condition of "No Exposure" exists at the industrial facility. A condition of "No Exposure" means that a Discharger's industrial activities and materials are not exposed to storm water. Industrial storm water discharges from construction and land disturbance activities are ineligible for the NEC coverage. Dischargers who file valid NECs in accordance with these instructions are not required to implement ~~BAT~~ Best Available Technology Economically Achievable /~~BCT~~Best Conventional Pollutant Control Technology and comply with the Storm Water Pollution Prevention Plan (SWPPP) and monitoring requirements of this General Permit.

Obtaining and Maintaining NEC Coverage

A Discharger~~s~~ ~~shall~~ must electronically certify and submit NEC Permit Registration Documents (PRDs) via State Water Resources Control Board's (State Water Board's) Storm Water Multi-Application and Report Tracking System (SMARTS) to obtain NEC coverage. This conditional exclusion does not become effective until the PRDs are submitted and the annual fee is paid. Upon receipt of the annual fee, the Discharger will electronically receive an NEC acceptance notification via SMARTS, which will include a Waste Discharge~~r~~ Identification (WDID) number. A Discharger~~s~~ ~~shall~~ must maintain a condition of "No Exposure" at the facility ~~in order~~ for the conditional exclusion to remain applicable. The Discharger ~~shall~~ must annually electronically re-certify the NEC via SMARTS to confirm that the conditions of "no exposure" are being maintained. If conditions change resulting in the exposure of materials and activities to storm water, the Discharger must electronically certify and submit PRDs via SMARTS for Notice of Intent (NOI) coverage under the General Permit for Storm Water Discharges Associated with Industrial Activities (General Permit).

Fees

First time NEC coverage PRDs and the annual re-certification require a ~~fee~~ fee~~that is currently $242~~. ~~This~~ ~~f~~Fees may be changed by ~~State Water Resources Control Board (~~State Water Board~~)~~ regulation, independent of this General Permit ~~adoption~~.

How to Prepare and Submit PRDs for ~~the~~ NEC Coverage

A Discharger~~s~~ ~~shall~~ must electronically certify and submit PRDs for NEC coverage in accordance with the instructions provided at the State Water Board web site for SMARTS:

https://smarts.waterboards.ca.gov/smarts/faces/SwSmartsLogin.jsp

A Discharger~~s~~ with multiple facilities that satisfy the conditions of "No Exposure" ~~shall~~ must certify and submit PRDs for each facility. The Discharger is~~s are~~ required to inspect and evaluate each individual facility to determine the condition of No-Exposure. The Discharger must~~s shall~~ retain an electronic or paper copy of the NEC coverage acceptance notification for their records.

The following information is required in the PRDs:

Discharger Information

1. The legal business name of the business entity, public organization, or any other entity that operates the facility described in the certification. The name of the operator may or may not be the same as the name of the facility. The operator is the legal entity that controls the facility operations, not the plant or site manager.

2. The mailing address of the facility operator, including the city, state, and zip code.

3. The facility operator contact person, telephone number and e-mail address.

INSTRUCTIONS FOR NO EXPOSURE CERTIFICATION (NEC)

Facility Information

4. The legal business name of the facility.

5. The total acreage of the facility associated with industrial activity. (Facility size in acres is calculated by taking the square feet and dividing by 43,560.)

6. The complete physical street address (e.g. the street address used for express deliveries), including the city, State, and zip code. Do not use a P.O. Box number. If ~~no~~ a physical street address does not exist~~s~~, describe the location or provide the latitude and longitude of a point within the facility boundary. Latitude and longitude are available from United States Geological Survey quadrangle or topographic maps, or may be found using a mapping site on the internet.

7. The facility contact person, telephone number, and e-mail address.

8. The 4-digit Standard Industrial Classification (SIC) code that represents the facility primary industrial activity. Provide a brief description of the primary industrial activity. If applicable, enter other significant SIC codes and descriptions. To obtain these codes, see the 1987 SIC Manual or the Occupational Health and Safety Administration's site:

   http://www.osha.gov/pls/imis/sicsearch.html

9. If the facility is currently covered under the General Permit, include the WDID number. The WDID number will be used at a later date to terminate the facility's coverage under the General Permit as necessary.

Facility Mailing or Billing Address

Completion~~g~~ of this item is ~~only~~ required ~~if there is a different~~ the facility mailing address or billing address ~~than~~ differs from the physical facility address provided above. The Discharger ~~shall~~ must indicate ~~to~~ which address the annual fee invoice ~~should~~ must be sent to if the State Water Board is unable to transmit the invoice electronically.

Site Map~~s~~

Site maps ~~are to~~must be prepared and submitted ~~consistent~~ in accordance with the requirements in Section X.E of this General Permit.

NEC~~Exposure~~ Checklist

The Discharger must ~~At the end of this Appendix, there is a list of~~ evaluate the eleven major areas ~~for which~~that storm water exposure may occur, ~~must be evaluated by the Discharger~~per the listing at the end of this appendix. The Discharger must be able to certify that none of these major areas have potential for exposure. If the Discharger cannot certify that every one of the eleven major areas do not have exposure, a potential for exposure exists at the facility and the facility is not eligible for NEC coverage. The Discharger must obtain (or continue) NOI coverage under this General Permit if the facility is not eligible for NEC coverage. After obtaining NOI coverage, the Discharger ~~can institute~~may implement facility modifications to eliminate the potential for a discharge of storm water exposed to industrial activity, and then change their NOI coverage to NEC coverage by certifying ~~they meet~~ the conditions of "No Exposure~~.~~" are met.

Certification

Federal and state statutes provide for severe penalties for Dischargers ~~who~~ that submit false information on the PRDs. Dischargers shall certify and submit PRDs via SMARTS for NEC coverage in accordance with Electronic Signature and Certification Requirements in Section XXI.K of this General Permit.~~Federal regulations require the PRDs to be certified by an Operator as follows:.~~

~~For a corporation: an Operator is a responsible corporate officer, which meansas follows:~~

~~The president, secretary, treasurer, or vice-president of the corporation in charge of a principal business function, or any other person who performs similar policy or decision making functions for the corporation, or~~

~~The manager of one or more manufacturing, production, or operating facilities, provided the manager is authorized to make management decisions which govern the operation of the regulated facility, including having the explicit or implicit duty of making major capital investment recommendations, and initiating and directing other comprehensive measures to assure long-term environmental compliance with environmental laws and regulations; the manager can ensure that the necessary systems are established or actions taken to gather complete and accurate information for permit application requirements, and has the authority to sign documents has been assigned or delegated to the manager in accordance with corporate procedures;~~

~~For a partnership or sole proprietorship, an Operator is a general partner or the proprietor; or~~

DRAFT

INSTRUCTIONS FOR NO EXPOSURE CERTIFICATION (NEC)

~~For a municipal, state, federal, or other public facility, an Operator is either a principal executive or ranking elected official.~~

B. GUIDANCE:

~~Please c~~Contact your local Regional Water Quality Control Board (Regional Water Board) office with questions regarding this guidance.

1. Who is Eligible to Qualify for the No Exposure Certification (NEC) - Conditional Exclusion?

All industrial categories listed in Attachment A of this General Permit (excluding construction) are eligible to apply for the NEC coverage.

2. Limitations on Eligibility for ~~the~~ NEC coverage

In addition to construction projects not being eligible, the following situations limit the applicability of NEC coverage:

a. NEC coverage is available on a facility~~-~~-wide basis only, not for individual drainage areas or discharge locations. Generally, if any exposed industrial materials or activities exist, or have a potential to exist, anywhere at a facility, NEC coverage is not applicable to the facility. If the Regional Water Board determines that a facility does have exposure or the facility's storm water discharges have a reasonable potential to cause or contribute to an exceedance of applicable water quality objectives/standards, the Regional Water Board can deny NEC coverage.

b. If changes at a facility result in potential exposure of industrial activities or materials, the facility is no longer eligible for NEC coverage. Dischargers shall register for NOI coverage under this General Permit prior to a planned facility change that will cause exposure, or within seven (7) calendar days after unplanned exposure occurs. If an unplanned exposure occurs due to an emergency response or one-time event that is unlikely to re-occur, a Discharger may contact the Regional Water Board to discuss whether the requirement to obtain NOI coverage can be waived. Unless the Discharger receives a written waiver from the Regional Water Board, the Discharger shall electronically certify and submit PRDs to obtain NOI coverage.

c. Current contamination resulting from historic industrial practices at the facility (e.g., soil contamination, groundwater contamination, etc.) represents a condition of exposure to waters of the United S~~s~~tate; therefore a facility with historic contamination is not eligible for NEC coverage.

3. What is the Definition of No Exposure?

a. No Exposure means all industrial materials and activities are protected by a storm-resistant shelter to prevent exposure to rain, snow, snowmelt and/or runoff.

b. Industrial materials and activities include, but are not limited to, material-handling equipment or activities; industrial machinery; raw materials, intermediate products, by-products, and final products; or waste products.

c. Material handling activities include storage, loading and unloading, transport, or conveyance of any raw material, intermediate product, by-product, final product, or waste product.

d. Final products ~~which are meant~~intended to be used outdoors (e.g., automobiles) typically pose little risk of polluting storm water ~~because they are~~since not typically contaminated with pollutants that become mobilized by contact with storm water. Final products are exempt from the requirement for protection by a storm-resistant shelter to qualify for no exposure. Similarly, containers, racks, and other transport platforms (e.g., wooden pallets) used for the storage or conveyance of final products may also be stored outside if pollutant-free or pollutants do not mobilize via contact with storm water.

e. Storm-resistant shelters include: (1) completely roofed and walled buildings or structures, (2) structures with only a top cover (no side coverings) supported by permanent supports, provided material within the structure is not subject to wind dispersion (sawdust, powders, etc.) or being tracked out of the facility, and is not a source of pollutants in the ~~-~~industrial storm water discharges.

4. Industrial Materials/Activities ~~that Do~~ Not Requiring a Storm-Resistant Shelter

~~While t~~The intent of the "No Exposure" exclusion is to ~~promote~~ maintain a condition of permanent "No Exposure~~,~~". ~~a~~ A storm-resistant shelter is not required for the following industrial materials and activities:

a. Drums, Barrels, Tanks, and Similar Containers that are sealed ("sealed" means banded or otherwise secured and without operational taps or valves), are not exposed provided those containers are not deteriorated, do not contain residual materials on

the outside surfaces, and do not leak. Drums, barrels, etc., that are not opened while outdoors, or are not deteriorated or leaking, ~~are unlikely to~~and that do not pose ~~constitute~~ a risk of contaminating storm water runoff. Consider the following when making ~~your~~ a "No Exposure" determination:

i. ~~-~~Materials shall not be added or withdrawn to/from containers while outdoors

ii. Simply moving containers while outside does not create exposure unless exposure occurs when pollutants are "tracked out" by the container handling equipment or vehicles.

iii. All outdoor containers shall be inspected to ensure they are not open, deteriorated, or leaking. When an outdoor container is observed as opened, deteriorated, or leaking, the container must immediately be closed, replaced, or sheltered. Frequent detection of open, deteriorated, or leaking containers, or failure to immediately close, replace, or shelter opened, deteriorated or leaking containers will cause a condition of exposure.

iv. Containers, racks, and other transport platforms (e.g., wooden pallets) used with ~~the~~ drums, barrels, etc., can be stored outside providing they are contaminant-free and in good repair.

b. Above Ground Storage Tanks (ASTs)~~.~~ In addition to generally being considered as not exposed, ASTs may also be exempt from the prohibition against adding or withdrawing material to/from external containers. ASTs typically use transfer valves to dispense materials ~~which~~ that support facility operations (e.g., heating oil, propane, butane, chemical feedstock) or fuel for delivery vehicles (gasoline, diesel, compressed natural gas). For operational ASTs to qualify for "No Exposure", the following must be satisfied:

i. The tank(s) shall be physically separated from and not associated with vehicle maintenance operations.

ii. There shall be no leaks from piping, pumps, or other equipment that has the potential to come in contact with storm water.

iii. Wherever feasible, the tank(s) shall ~~-~~have secondary containment (e.g., an impervious dike, berm or concrete retaining structure) to prevent runoff in the event of a structural failure or leaking transfer valve. Note: any resulting unpermitted discharge ~~would~~ is in violation ~~of~~ the CWA.

c. Lidded Dumpsters. Lidded dumpsters containing waste materials, providing the containers are completely covered and nothing can drain out holes in the bottom, spilled when loaded into the dumpster, or spilled in loading into a garbage truck. Industrial waste materials and trash that is stored uncovered is considered exposed.

d. Adequately maintained vehicles, such as trucks, automobiles, forklifts, trailers or other general-purpose vehicles found onsite - but not industrial machinery ~~- which~~that are not leaking, are in good repair or are not otherwise a potential source of contaminants:

i. Vehicles passing between buildings ~~will likely~~may be exposed to storm water, however if the vehicles are adequately maintained, a condition of exposure ~~will~~ may not exist. Similarly, non-leaking vehicles awaiting maintenance at vehicle maintenance facilities are not considered as potential exposure. However, vehicles that have been washed or rinsed that are not completely dry prior to outside exposure have the potential to cause a condition of exposure. Vehicles that track materials out of the facility are considered to be mobilizing pollutants. Vehicles that exit maintenance bays are also considered to cause exposure.

ii. The mere conveyance between buildings of materials / products that ~~would~~ are otherwise not ~~be~~ allowed to be stored outdoors, does not create a condition of exposure, provided the materials/products are ~~not~~ adequately protected from storm water and ~~could~~ do not have the potential to be released as a result of a leak or spill.

e. Final products built and intended for use outdoors (e.g., new cars), provided the final products have not deteriorated, are not contaminated, or are not otherwise potential sources of contaminants.

Types of final products not qualifying for a certification of "No Exposure":

i. Products that ~~would~~ may be mobilized in storm water discharges (e.g., rock salt).

ii. Products, which may, when exposed, oxidize, deteriorate, leak, or otherwise be a potential source of contaminants (e.g., junk cars, stockpiled train rails).

iii. "Final" products that are, in actuality, "intermediate" products. Intermediate products

DRAFT

are those used in the composition of yet another product (i.e.g., sheet metal, tubing, and paint used in making tractors).

iv. Even if the intermediate product is "final" for a manufacturer and destined for incorporation in a "final product intended for use outdoors," thesce product is are not allowed to be exposed because they may be chemically treated or are insufficiently impervious to weathering.

f. Special Conditions for Construction Activities
Permanent, uninterrupted sheltering of industrial activities or materials may not always be possible during facility renovation or construction. When such circumstances exist, the Discharger is not required to obtain coverage under an NPDES permit as long as the following conditions are met:

i. Materials and activities are protected with temporary covers or shelters (i.e.g. tarpaulins);

ii. The temporary covers or shelters shall adequately prevent the contact of storm water to materials and activities;

iii. Materials that are subject to wind dispersion are not eligible forstored under temporary sheltering;

iv. Temporary shelters shall are only be used when necessary during facility renovation or construction and until permanent storm-resistant shelters as described above are available; and,

v. Temporary shelters shall are only be used for a single period of ninety days or less. (Facilities with construction and renovation projects that will need the use of temporary shelters beyond 90 days, or that will require multiple periods of ninety days or less, are required to be covered by an NPDES permit.)

5. Other Potential Sources of Contaminants

a. Particulate Emissions from Roof Stacks and/or Vents: Deposits of particles or residuals from roof stacks/vents which couldthat have the potential to be mobilized by storm water runoff are considered exposed.

b. Acid Rain Leachate: Industrial facilities are also responsible for storm water discharges that contain pollutants resulting from the leaching effect of acidic storm water on metal building structures. Therefore, operators must be aware when certifying a condition of "no exposure" of the existence of structural elements that could be soluble as a result of contact with acidic precipitation (e.g., uncoated copper roofs). If the dissolved metals or other contaminants could cause or contribute to a water quality violation, a condition of "no exposure" cannot be certified.

c.b. Pollutants Potentially Mobilized by Wind. Windblown materials cause a condition of exposure. Materials sheltered from precipitation can stillare be deemed exposed if the materials can has a potential to be mobilized by wind.

6. Certifying a Condition of "No Exposure"

To obtain the NEC coverage, the Discharger must electronically certify and submit PRDs via SMARTS that the facility meets the definition of "No Exposure" and pay an annual fee. The Discharger must **submit PRDs for NEC coverage even if the Discharger was not previously required to file for NEC coverage under the previous General Permit**. These PRDs include a checklist requiring the Discharger to evaluate eleven major areas to determine whether there is exposure of industrial activities and materials at the facility. To qualify for NEC coverage the Discharger must satisfy all the NEC coverage conditions in this General Permit and certify that there is "No Exposure". The checklist: 1) aids the Discharger in determining if its facility is eligible for NEC coverage, and 2) furnishes the necessary documentation supporting relief from the General Permit's requirement of NOI coverage. Additionally, Ddischargers with NEC coverage are not required to develop and implement SWPPPs or comply with ete the monitoring requirements.

If a Discharger cannot certify that there is "No Exposure" at the facility, the Discharger must make appropriate changes at the facility to eliminate exposure prior to registering for future NEC coverage. These Facility changes must remove all potential for pollutant exposure to storm water.

An annual inspection and evaluation, re-certification and fee are required thereafter.

7. Other NEC coverage Facts:

a. NEC coverage is only valid if the condition of "No Exposure" exists and is reasonably expected to continue to exist. Dischargers shall electronically certify and submit PRDs for NOI coverage when the condition of "No Exposure" is no longer s expected to exist.

b. Dischargers must file PRDs for NEC coverage for each qualifying facility.

DRAFT

c. An NEC must be submitted for each separate facility qualifying for the "Nno Eexposure" conditional exclusion.

d. An NEC is non-transferable. If a new operator takes over facility operations, the new operator shall electronically certify and submit PRDs and applicable fees for new NEC coverage via SMARTS prior to the operations transfer. NEC coverage cannot be transferred from one physical location to another regardless of ownership.

8. Operators May Be Required to Obtain NOI Coverage Based on the Protection Of Water Quality?

Operators who certified that their facilities qualify for NEC coverage may, nonetheless, be required by the Regional Water Board to obtain NOI coverage if the Regional Water Board determines that the facility's discharge has the potential to cause or contribute to an exceedance of applicable water quality objectives/standards or determines that exposure exists at the facility. The Regional Water Board may request information and/or inspect the facility to assess potential water quality impacts and to determine if NOI coverage is required. The Discharger shall take appropriate actions to ensure that water quality standards are achievedcompliance with the General Permit.

9. Steps to Obtain NEC coverage

(This section will walk you through the process of obtaining NEC coverage.

Step 1: Determine if your facility is subject to this General Permit (refer to Attachment A of this General Permit). If yes, proceed to Step 2. If not, stop here.

If your facility is included in Attachment A and conducts industrial activities, you are required to **either** register for NOI coverage or NEC coverage.

Step 2: Determine if your regulated industrial activity meets the definition of "No Exposure" and qualifies for the exclusion from permitting. If it doesyes, proceed to Step 3. If not, stop here and obtain NOI coverage. An evaluation ofg the facility must be conducted by, facility personnel familiar with the facility and its operations should be used. Inspect all facility areas and potential pollutant sources to determine whether the facility satisfies the "No Exposure" conditions.

Step 3: Electronically certify and submit the PRDs for NEC coverage via SMARTS and mail the annual fee to the State Water Board at the following address:

SWRCB
Surfacetorm Water Permitting Section
PO Box 1977
Sacramento, CA 95812-1977

To maintain NEC coverage, the NEC must re-certify and pay a fee annually. This may only be done if the condition of "No Exposure" continues to exist at the facility.

Step 4: If requested, you must allow staff from the Regional Water Boards, local Municipal Separate Storm Sewer System (MS4), or United States Environmental Protection Agency must be allowed to inspect your facility. All inspection reports will be made publicly available.

Step 5: Maintain a condition of "Nno Eexposure".

- NEC coverage is not a blanket exemption. Therefore, if facility physical or operational changes occur which cause exposure of industrial activities or materials to storm water, the Discharger must then immediately comply with all the requirements of this General Permit, including obtaining NOI coverage as applicable.

- To maintain the condition of "No Exposure", the Discharger shall annually evaluate the facility to assure that the conditions of "No Exposure" still exist. More frequent evaluations may be necessary in circumstances when facility operations are rapidly changing.

- Failure to maintain the condition of "No Exposure" or otherwise obtain NOI coverage can may lead to the unauthorized discharge of storm water associated with industrial activity to waters of the United States, resulting in penalties under the CWA and Water Code.

C. Frequently Asked Questions:

Q1. Who is eligible for NEC Coverage?

A. Any Discharger operating a facility described in Attachment A may register for NEC coverage if their facility has a condition of "No Exposure".

Q2. How does an eligible Discharger file for NEC coverage and where is the annual fee sent?

A. The PRDs for NEC coverage shall be electronically certified and submitted in accordance with the instructions provided in SMARTS at the State Water Board website at: https://smarts.waterboards.ca.gov/smarts/faces/SwSmartsLogin.jsp. The fee is currently $242, but may be changed by regulation. Once NEC coverage is

DRAFT

accepted, an invoice will be electronically sent to the Discharger. The annual fee and invoice shall be sent to:

State Water Resources Control Board
Division of Water Quality
Attention: Industrial Storm Water Unit
P.O. Box 1977
Sacramento, CA 95812-1977

Q3. If my facility's storm water discharges are covered by an individual permit, can I file for NEC coverage?

A. Yes. Storm water discharges covered by an individual permit are eligible for NEC coverage if the conditions at the facility satisfy the definition of "No Exposure" and you obtain approval to terminate individual permit coverage from the local Regional Water Board prior to PRD submittal. Approval from the Regional Water Board is mandatory. Many individual permits, for example, contain numeric storm water effluent limitations ("antibacksliding" provisions may prevent these facilities from qualifying for the "No Exposure" conditional exclusion).

Q4. My facility was originally excluded from the Phase I regulations because it was classified as a "light industrial facility". The facility has never had any exposure to storm water runoff. Do I now need to certify that the facility meets the No Exposure Exclusion from NPDES Storm Water Permitting?

A. Yes. See answer provided to question number 9, "What is the exclusion "conditional" upon?"

Q5. Do I have to file a Notice of Termination (NOT) and a register for NEC coverage if my facility has NOI coverage and qualifies for NEC coverage?

A. No. You are only required to register for NEC coverage. You must provide the WDID# in your NEC coverage PRDs in order for the State Water Board to change permit coverage status.

Q6. When and how often is a NEC coverage re-certification required?

A. Re-certification of NEC coverage is required annually (assuming the facility maintains its "No Exposure" status). The State Water Board will electronically transmit an NEC re-certification and annual fee notification to each facility operator who has filed for NEC coverage.

New Dischargers must register for NEC coverage before the commencement of facility operations. Dischargers that fail to file for NEC coverage or apply for NOI coverage before the commencement of facility operations will be out of compliance and subject to enforcement.

Existing Dischargers have two options for submitting NECs:

1. Facility operators of "light industrial" facilities who have been operating under their original, no-certification-required permitting exemption must submit the NEC at any time prior to October ~~July~~ 1, 2015. ~~Such~~ Dischargers who have not submitted an NEC or applied for permit coverage by this due date will be considered out of compliance and subject to Water Board enforcement.

2. Dischargers who have NOI coverage may register for NEC coverage at any time following completion of facility changes that result in the condition of "No Exposure".

Q7. What happens if I know of changes that may cause exposure?

A. If exposure has the potential to occur in the near future due to some anticipated change at the facility, ~~you must~~the Discharger must obtain NOI coverage to avoid potential enforcement for violations of this General Permit.

Q8. Is the NEC coverage transferable to a new Discharger?

A. No. If a new operator takes over your facility, the new operator must register for new NEC coverage prior to the transfer. A new application fee is required.

Q9. What is the exclusion "conditional" upon?

A. The exclusion from permit coverage requirements is "conditional" upon the certification of the Discharger that the facility does not have exposure of materials or activities to storm water. PRDs for NEC coverage shall be electronically submitted to the State Water Board and will not be accepted if incomplete. The Regional Water Board may review the information, contact and/or inspect the facility, and invalidate the NEC and require the Discharger to obtain NOI coverage. PRDs are public documents and will be available for public review via SMARTS.

Q10. Can secondary containment around an outdoor exposed area qualify for a condition of "No Exposure"?

A. ~~In general, i~~If secondary containment is engineered to always prevent a discharge of collected rainfall (based on the historical rainfall record) and a simultaneous spill

of any other industrial materials or liquids, the "No Exposure" condition ~~can~~ may be claimed. Note ~~that: there~~that there must be proper disposal of any water or liquids collected from the containment (i.e~~.g~~., discharged in compliance with another NPDES permit, treated and discharged to the sanitary sewer, or trucked offsite to an appropriate disposal/treatment facility).

D. NEC Checklist

An NEC Checklist must be prepared by the Discharger demonstrating that: (1) the facility has been evaluated,~~;~~ ~~and that~~ (2) none of the following materials or activities are, or will be in the foreseeable future, exposed to precipitation, and ~~that~~ (3) all unauthorized NSWDs have been eliminated:

1. Using, storing or cleaning industrial machinery or equipment, and areas where residuals from using, storing or cleaning industrial machinery or equipment remain and are exposed;

2. Materials or residuals on the ground or in storm water inlets from spills/leaks;

3. Materials or products from past industrial activity;

4. Material handling equipment (except adequately maintained vehicles);

5. Materials or products during loading/unloading or transporting activities;

6. Materials or products stored outdoors (except final products intended for outside use, i.e~~.g~~., new cars, where exposure to storm water does not result in the discharge of pollutants);

7. Materials contained in open, deteriorated or leaking storage drums, barrels, tanks, and similar containers;

8. Materials or products handled/stored on roads or railways owned or maintained by the Discharger;

9. Waste material (except waste in covered, non-leaking containers, i.e~~.g~~., dumpsters);

10. Application or disposal of processed wastewater (unless already covered by an NPDES permit); and

11. Particulate matter or visible deposits of residuals from roof stacks/vents evident in the storm water outflow.

DRAFT

APPENDIX 3

WATERBODIES WITH CLEAN WATER ACT SECTION 303(D) LISTED IMPAIRMENTS

NATIONAL POLLUTION DISCHARGE ELIMINTATION SYSTEM (NPDES)
GENERAL PERMIT FOR STORM WATER DISCHARGES
ASSOCIATED WITH INDUSTRIAL ACTIVITIES
(GENERAL PERMIT)

The 303(d) impairments below are sourced from the 2010 Integrated Report. The rows in red are impairments for which industrial storm water Dischargers subject to this General Permit are not required to analyze for additional parameters unless directed by the Regional Water Board, because these parameters are typically not associated with industrial storm water. Test methods with substantially similar or more stringent method detection limits may be used if approved by the staff of the State Water Board prior to sampling and analysis and upon approval , will be added into SMARTS. The rows that are not in red are impairments for which Dischargers in the 303(d) impaired watershed are required to analyze for additional parameters, if applicable, because these parameters are more likely to be associated with industrial storm water. See General Permit Section XI.B.6.e. In the event that any of the impairments in this appendix are subsequently delisted, the Dischargers in that watershed are no longer required to analyze for the additional parameters for those impairments, and the provisions for new Dischargers in 303(d) impaired watersheds contained in Section VII.B of this General Permit no longer apply for those impairments.



app3_303d.xls

Excel Spreadsheet:

Field Code Changed

Appendix B
California Industrial Storm Water General Permit – Change Sheet

Change Sheet # 1 for the National Pollutant Discharge Elimination System (NPDES) General Permit for Storm Water Discharges Associated With Industrial Activities (Industrial General Permit)

Changes in ~~**double redline strike out**~~ are **NEW deletions** since the Comment period that closed March 4, 2014.

Changes in **double red underline** are the **NEW additions** since the Comment period that closed March 4, 2014.

Changes in ~~**redline strike out**~~ are **previous deletions** made in response to Comments made on the 2013 draft Industrial General Permit and already identified in the February 19, 2014 version of the Industrial General Permit.

Changes in **red underline** are **previous additions** made in response to Comments made on the 2013 draft Industrial General Permit and already identified in the February 19, 2014 version of the Industrial General Permit.

Changes 1-8 are on the Fact Sheet for the Industrial General Permit

Change 1: On page 2 Section I.B of the Draft Fact Sheet, change the seventh bullet point as follows:

- Certify and submit all permit-related compliance documents via the Storm Water Multiple Application Reporting and Tracking System (SMARTS). Dischargers shall certify and submit these documents which include, but are not limited to, Permit Registration Documents (PRDs) including Notices of Intent (NOIs), No Exposure Certifications (NECs), and Storm Water Pollution Prevention Plans (SWPPPs), as well as Annual Reports, Notices of Termination (NOTs), Level 1 ERA Reports, and Level 2 ERA Technical Reports.

Change 2: On page 26 Section II.F of the Draft Fact Sheet, addition of a third paragraph as follows:

New Dischargers (as defined in Attachment C) applying for NOI coverage under this General Permit that will be discharging to an impaired water body with a 303(d) listed impairment are ineligible for coverage unless the Discharger submits data and/or information, prepared by a QISP, demonstrating that the facility will not cause or contribute to the impairment. Section VII.B of this General Permit describes the three different options New Dischargers have for making this determination. This General Permit requires a QISP to assist the New Discharger with this determination because individuals making this determination will need expertise in industrial storm water pollutant sources, BMPs and a thorough understanding of complying with U.S. EPAs storm water regulations and this General Permit's requirements. Not requiring New Dischargers to have a QISP assist in this demonstration would possibly lead to costly retrofits or closure of a new facility that has not demonstrated that the facility will not cause or contribute to the impairment.

Change 3: On page 28 Table 1 of the Draft Fact Sheet, addition of language as follows:

TABLE 1: Role-Specific Permit Requirements

Qualifications	Task
QISP	Assist New Dischargers determine coverage eligibility for Discharges to an impaired water body. Level 1 ERA Evaluation and report, Level 2 ERA Action Plan, and Technical Report, and the Level 2 ERA extension
California licensed professional engineer	Inactive Mining Operation Certification, SWPPPs for inactive mining, and annual re-certification of Inactive Mining Operation Certification, NONA Technical Reports, and Subchapter N calculations

Change 4: On page 29 Section II.I.1 of the Draft Fact Sheet, additional language added to the second paragraph as follows:

Failure to develop or implement an adequate SWPPP, or update or revise an existing SWPPP as required, is a violation of this General Permit. Failure to maintain the SWPPP on-site and have it available for inspection is also a violation of this General Permit.

Dischargers are also required to submit their SWPPPs and any SWPPP revisions via SMARTS; accordingly, BMP revisions made in response to observed compliance problems will be included in the revised SWPPP electronically submitted via SMARTS. Dischargers are also required to submit their SWPPPs and any significant SWPPP revisions via SMARTS; accordingly, BMP revisions made in response to observed compliance problems will be included in the revised SWPPP electronically submitted via SMARTS. Not all SWPPP revisions are significant and it is up to the Dischargers to distinguish between revisions that are significant and those that are not significant. If no changes are made at all to the SWPPP, the Discharger is not required to resubmit the SWPPP on any specific frequency.

- Significant SWPPP Revisions: Dischargers are required to certify and submit via SMARTS their SWPPP within 30 days of the significant revision(s). While it is not easy to draw a line generally between revisions that are significant and those that are not significant, Dischargers are not required to certify and submit via SMARTS any SWPPP revisions that are comprised of only typographical fixes or minor clarifications.

- All Other SWPPP Revisions: Dischargers are required to submit revisions to the SWPPP that are determined to not be significant every three (3) months in the reporting year.

Change 5: On page 41 Section II.I.3 of the Draft Fact Sheet, new first paragraph added as follows (this also includes the addition of footnote 12 and 13):

Dischargers should be aware of the potential unintended public health concerns associated with treatment control BMPs. Extensive monitoring studies conducted by the California Department of Public Health (CDPH) have documented that mosquitoes opportunistically breed in structural BMPs, particularly those that hold standing water for over 96 hours. BMPs that produce mosquitoes create potential public health concerns and increase the burden on local vector control agencies that are mandated to inspect for and abate mosquitoes and other vectors within their jurisdictional boundaries. These unintended consequences can be lessened when BMPs incorporate design, construction, and maintenance principles developed specifically to minimize standing water available to mosquitoes[12] while having negligible effects on the capacity of the structures to provide water quality improvements. The California Health and Safety Code prohibits landowners from knowingly providing habitat for or allowing the production of mosquitoes and other vectors, and gives local vector control agencies broad inspection and abatement powers[13].

New Footnote 12: [12] California Department of Public Health. (2012). Best Management Practices for Mosquito Control in California. < http://www.westnile.ca.gov/resources.php>. [as of February 4, 2014]

New Footnote 13: [13] California Health & Safety Code, Division 3, Section 2060 and following.

Change 6: On page 43 Figure 3 of the Draft Fact Sheet has been updated and replaced with the following:

FIGURE 1: Compliance Determination Flowchart

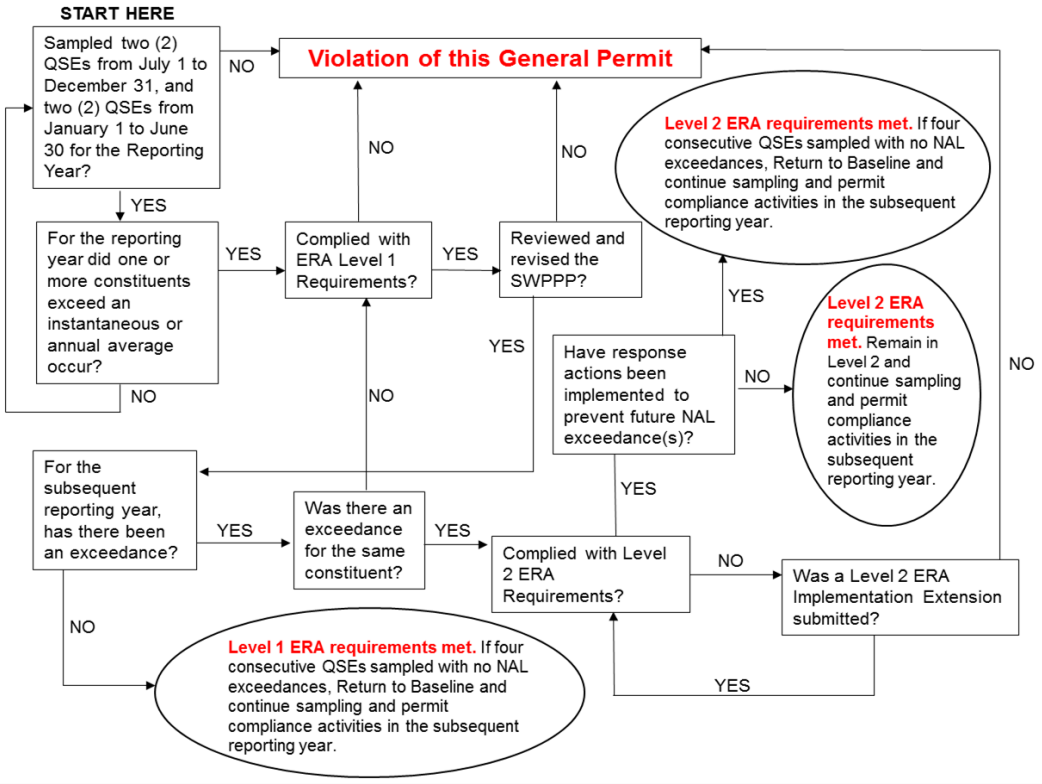

Change 7: On page 61 Section II.K.5.b of the Draft Fact Sheet, change made as follows:

b. The Level 2 ERA Technical Report contains three different options that require a Discharger to submit demonstrations showing the cause of the NAL exceedance(s). This General Permit requires a Discharger to appoint a QISP to prepare the Level 2 ERA Technical Reports. The State Water Board acknowledges that there may be cases where a combination of the demonstrations may be appropriate; therefore a Discharger may combine any of the following three demonstration options in their Level 2 ERA Technical Report when appropriate. A Discharger is only required to annually update its Level 2 ERA Technical Report when necessary as defined in Section XII.D.3.c of this General Permit and is not required to annually re-certify and re-submit the entire Level 2 ERA Technical Report. If there are no changes prompting an update of the Level 2 ERA Technical Report, as specified in Section XII.D.3.c of this General Permit, the Discharger will provide this certification in the Annual Report that there have been no changes warranting re-submittal of the Level 2 ERA Technical Report.

Change 8: On page 65 Section II.M of the Draft Fact Sheet, change made to the fourth paragraph as follows:

The State Water Board believes that it is necessary for Compliance Group Leaders to have a higher level of industrial storm water compliance and training experience than the expectations of a ~~QSIP~~QISP. Many stakeholder comments on this General Permit suggested various certifications to provide this higher level of experience; however, the State Water Board believes a process similar to the Trainer of Record process for the Construction General Permit training program will develop Compliance Group Leaders with the appropriate level of experience to fulfill the necessary qualifications.

Change 9: On page 70 Section II.S.2.a of the Draft Fact Sheet, language added as follows:

a. Engineered and constructed to contain all storm water associated with industrial activities from discharging to waters of the United States, including no discharge to groundwater that has a direct hydrologic connection to waters of the United States. The General Permit covers only dischargers who are required to obtain an NPDES permit under the CWA. Determining whether a discharge to groundwater has a direct hydrological connection to the waters of the United States will require a fact-specific inquiry including, but not limited to, the time and distance connecting the discharge to the surface waters, geology, and slope. (See e.g., Greater Yellowstone Coalition v. Larson (D.Idaho 2009) 641 F.Supp.2d 1120.).

Changes 10-23 are on the Order for the Industrial General Permit

Change 10: On page 3 Section I.A Finding 17 of the Draft Order, language added as follows:

17. This General Permit requires that the Discharger certify and submit all Permit Registration Documents (PRDs) for Notice of Intent (NOI) and No Exposure Certification (NEC) coverage via the State Water Board's Storm Water Multi-~~ple~~ Application and Report Tracking System (SMARTS) website. ~~An~~(See Attachment D

for an example of the information required to be submitted in the PRDs via SMARTS ~~can be found in Attachment D.~~.) All other documents required by this General Permit to be electronically certified and submitted via SMARTS can be submitted by the Discharger or by a designated Duly Authorized Representative on behalf of the Discharger. Electronic reporting is required to reduce the state's reliance on paper, to improve efficiency, and to make such General Permit documents more easily accessible to the public and the Water Boards.

Change 11: On page 9 Section I.H Finding 50 of the Draft Order, language added as follows:

50. A QISP ~~is responsible for~~must assist the Discharger in completing the Level 1 status and Level 2 status ERA requirements as specified in Section XII of this General Permit. A QISP is also responsible for assisting New Dischargers that will be discharging to an impaired water body with a 303(d) listed impairment, demonstrate eligibility for coverage though preparing the data and/or information required in Section VII.B.

Change 12: On page 23 Section VII.B of the Draft Order, language added as follows:

B. New Dischargers applying for NOI coverage under this General Permit that will be discharging to ~~an impaired~~a water body with a 303(d) listed impairment are ineligible for coverage unless the Discharger submits data and/or information, prepared by a QISP, demonstrating that:

Change 13: On page 37 Section X.H.6 of the Draft Order, language added as follows:

6. Design Storm Standards for Treatment Control BMPs

   All new treatment control BMPs employed by the Discharger to comply with Section X.H.2 Advanced BMPs and new sediment basins installed after the effective date of this order shall be designed to comply with design storm standards in this Section~~.~~, except as provided in an Industrial Activity BMP Demonstration (Section XII.D.2.a). A Factor of Safety shall be incorporated into the design of all treatment control BMPs to ensure that storm water is sufficiently treated throughout the life of the treatment control BMPs. The design storm standards for treatment control BMPs are as follows:

Change 14: On page 39 Section XI.A.2.b of the Draft Order, language modified as follows:

b. Any Discharger ~~shall ensure that visual observations and sampling of storm water discharges from~~employing volume-based or flow-based treatment BMPs ~~and~~ shall sample any bypass that occurs while the visual observations and sampling of storm water discharges are conducted ~~at the same time~~.

Change 15: On page 46 Section XI.C.4.a of the Draft Order, language added as follows:

a. The Discharger may reduce the number of locations to be sampled in each drainage area (e.g., roofs with multiple downspouts, loading/unloading areas with multiple storm drains) if the industrial activities, BMPs, and physical

characteristics (grade, surface materials, etc.) of the drainage area for each location to be sampled are substantially similar to one another. To qualify for the Representative Sampling Reduction, ~~RSR,~~ the Discharger shall provide a Representative Sampling Reduction ~~RSR~~ justification in the Monitoring Implementation Plan ~~MIP~~ section of the SWPPP.

Change 16: On page 47 Section XI.C.4.b.iii of the Draft Order, language added as follows:

i. A description of the BMPs implemented in the drainage area;

Change 17: On page 47 Section XI.C.5.a of the Draft Order, language added as follows:

a. The Discharger may authorize ~~the lab~~an analytical laboratory to combine samples of equal volume from as many as four (4) discharge locations if the industrial activities, BMPs, and physical characteristics (grade, surface materials, etc.) within each of the drainage areas are substantially similar to one another.

Change 18: On page 48 Section XI.C.5.b of the Draft Order, language added as follows:

ii. A description of the BMPs implemented in the drainage area;

Change 19: On page 51 Section XII.C of the Draft Order, language added as follows:

C. Level 1 Status

A Discharger's Baseline status for any given parameter shall change to Level 1 status if sampling results indicate an NAL exceedance for that same parameter ~~in any subsequent reporting year~~. Level 1 status will commence on July 1 following the reporting year during which the exceedance(s) occurred.[1]

Change 20: On page 52 Section XII.D of the Draft Order, language added as follows:

D. Level 2 Status

A Discharger's Level 1 status for any given parameter shall change to Level 2 status if sampling results indicate an NAL exceedance ~~in any subsequent reporting~~ year for that ~~e~~same parameter~~.~~ while the Discharger is in Level 1. Level 2 status will commence on July 1 following the reporting year during which the NAL exceedance(s) occurred.[2]

[1] For all sampling results reported before June 30th of the preceding reporting year. If sample results indicating an NAL exceedance are submitted after June 30th, the Discharger will change status once those results have been reported.

[2] For all sampling results reported before June 30th of the preceding reporting year. If sample results indicating an NAL exceedance are submitted after June 30th, the Discharger will change status ~~once~~upon the date those results have been reported into SMARTS.

Change 21: On page 56 Section XII.D.3.c of the Draft Order, language added as follows:

c. Dischargers with Level 2 status who have submitted the Level 2 ERA Technical Report are only required to annually update the Level 2 ERA Technical Report based upon additional NAL exceedances of the same parameter and same drainage area (if the original Level 2 ERA Technical Report contained an Industrial Activity BMP Demonstration and the implemented BMPs were expected to eliminate future NAL exceedances in accordance with Section XII.D.2.a.ii), facility operational changes, pollutant source(s) changes, and/or information that becomes available via compliance activities (monthly ~~inspections~~visual observations, sampling results, annual evaluation, etc.). The Level 2 ERA Technical Report shall be prepared by a QISP and be certified and submitted via SMARTS by the Discharger with each Annual Report. If there are no changes prompting an update of the Level 2 ERA Technical Report, as specified above, the Discharger will provide this certification in the Annual Report that there have been no changes warranting re-submittal of the Level 2 ERA Technical Report.

Change 22: On page 71 Section XX.C.2.a of the Draft Order, footnote 25 added as follows:

a. The facility ~~shall~~ is ~~either be (1)~~ engineered and constructed to have contained the maximum historic precipitation event (or series of events) using the precipitation data collected from the National Oceanic and Atmospheric Agency's website (or other nearby precipitation data available from other government agencies)~~; or~~ so that there will be no discharge of industrial storm water to waters of the United States, including no discharge to groundwater that has a direct hydrologic connection to waters of the United States[25]; or,

New Footnote 25: [25]No discharge to groundwater that has a direct hydrological connection to waters of the United States shall mean that the discharger is not required to obtain an NPDES permit because there is no discharge to the waters of the United States, as defined by regulations and case law interpreting the scope of the Clean Water Act. (See, e.g., Greater Yellowstone Coalition v. Larson (D.Idaho 2009) 641 F.Supp.2d 1120.)

Change 23: On page 74-75 Section XXI.K.4 of the Draft Order changes are as follows:

C. Electronic Signature and Certification Requirements

1. LRP eligibility is as follows:

a. For a corporation: by ~~an authorized~~ a responsible corporate officer. ~~-~~For the purpose~~s~~ of this section, a~~n authorized~~ responsible corporate officer means:

i. ~~(a) a~~A president, secretary, treasurer, or vice-president~~, or other officer~~ of the corporation ~~with authority to execute documents on behalf~~in charge ~~of the corporation pursuant to corporate bylaws~~a principal business function; or ~~board resolution~~; or

ii.~~(b) t~~The manager of one or more manufacturing, production, or operating facilities, provided, the manager is authorized to make management decisions which govern the operation of the regulated facility~~, if~~ including having the

explicit or implicit duty of making major capital investment recommendations, and initiating and directing other comprehensive measures to assure long term environmental compliance with environmental laws and regulations; the manager can ensure that the necessary systems are established or actions taken to gather complete and accurate information for permit application requirements; and where authority to sign documents has been assigned or delegated to the manager in accordance with corporate ~~bylaws and by corporate resolution~~; procedures.

b. For a partnership or sole proprietorship: by a general partner or the proprietor, respectively, ~~that is authorized to execute legally binding documents on behalf of the partnership or sole proprietorship (as the case may be) in accordance with the entity's governing documents; or,~~

c. For a municipality, state, federal, or other public agency: by either a principal executive officer or ranking elected official ~~that possesses signatory authority of the governmental agency at issue~~. This includes ~~principal executive officer of a federal agency includes~~ the chief executive officer of the agency or the senior executive officer having responsibility for the overall operations of a principal geographic unit of the agency (e.g., Regional Administrators of U.S. EPA).

Changes 24-27 are on the Attachments and Appendices for the Industrial General Permit

Change 24: On page 1 Attachment D is as follows:

This Attachment provides an example of the information Dischargers are required to submit in the PRDs via the Storm Water Multi~~-~~ple Application Reporting Tracking System (SMARTS). The actual PRD requirements are in Section II of this General Permit.

Change 25: On page 2 Attachment E (List Of Total Maximum Daily Loads (TMDLs) Applicable To Industrial Storm Water Dischargers) is as follows:

San Diego Regional Water Quality Control Board	
Chollas Creek	Diazinon
Chollas Creek	Copper, Lead, and Zinc
Los Peñasquitos Lagoon	Sediment
Rainbow Creek	Total Nitrogen and Total Phosphorus
Shelter Island Yacht Basin	Dissolved Copper
Baby Beach in Dana Point Harbor and Shelter Island Shoreline Park in SD Bay	Indicator Bacteria
Twenty Beaches and Creeks	Indicator Bacteria

Change 26: On page 2 Attachment H Item 7(Sample Collection and Handling Instructions) changes are as follows:

The Discharger can only use automatic sampling device to sample parameters that the device is designed to. For pH, Dischargers can only use automatic sampling devices with the ability to read pH within 15 minutes of sample collection.

Change 27: On page 1 Appendix 3 (Waterbodies With Clean Water Act Section 303(D) Listed Impairments) changes are as follows:

The 303(d) impairments below are sourced from the 2010 Integrated Report. The rows in red are impairments for which industrial storm water Dischargers subject to this General Permit are not required to analyze for additional parameters unless directed by the Regional Water Board, because these parameters are typically not associated with industrial storm water. Test methods with substantially similar or more stringent method detection limits may be used if approved by the staff of the State Water Board prior to sampling and analysis and upon approval , will be added into SMARTS. The rows that are not in red are impairments for which Dischargers in the 303(d) impaired watershed are required to analyze for additional parameters, if applicable, because these parameters are more likely to be associated with industrial storm water. See General Permit Section XI.B.6.e. In the event that any of the impairments in this appendix are subsequently delisted, the Dischargers with discharges ~~in~~to that watershed are no longer required to analyze for the additional parameters for those impairments, and the provisions for new Dischargers with discharges ~~in~~to 303(d) impaired water bodies contained in Section VII.B of this General Permit no longer apply for those impairments.

Appendix E
Project-Specific Hazardous Materials Business Plans (HMBPs)

(Provided on CD-ROM Only)

APPENDIX E

Project-Specific HMBPs

In compliance with the EIR mitigation measure HAZ-1a-c and California Action-Specific ARAR #90, the Hazardous Materials Business Plans (HMBPs) for the Topock Compressor Station and the IM-3 Treatment Plant will be updated to include the hazardous materials used for the groundwater remedy. Hazardous materials to be stored and handled at the Remedy-produced Water Conditioning Plant, the Hazardous Materials Storage Building inside the Compressor Station, and the Transwestern Bench will be incorporated into the existing HMBP for the Compressor Station. All hazardous materials to be stored and handled at remedy facilities located outside of the Compressor Station and the Transwestern Bench will be incorporated into the existing HMBP for the IM-3 Treatment Plant. These HMBPs will be updated for submittal to the County when required by HMBP guidance (i.e., after new hazardous materials are on site or qualifying facility modifications require HMBP updates).

Below is a list of potential hazardous materials and wastes that could be used and stored at the following remedy facilities:

- Potential chemicals to be used and stored in the Remedy-produced Water Conditioning Building (located inside the Compressor Station) include the following:
  - Caustic (e.g., sodium hydroxide), to be stored in a 550-gallon tank
  - Acid (e.g., hydrochloric acid), to be stored in a 550-gallon tank
  - A coagulant (e.g., Nalco Ultrion 8187 [aluminum chloride hydroxide])
  - A flocculent addition (e.g., Nalco® 7878 Flocculant [anionic type])
  - Laboratory reagents and related waste
  - Compressed gas cylinders
- Potential chemicals to be used and stored in the carbon amendment facilities (at the MW-20 Bench) include:
  - Carbon substrate (95 percent ethanol) - 15,000-nominal gallon tank at MW-20 Bench
  - Acids, caustics, and/or dispersants for use in the Clean-In-Place system at the MW-20 Bench (330-gallon totes or smaller-volume drums). Potential chemical reagents for use in this system may include hydrochloric, glycolic (hydroxyacetic), and phosphoric acids, sodium hydroxide, and hydrogen peroxide
  - Compressed gas cylinders
- Potential hazardous materials/wastes related to the groundwater remedy and stored in the Hazardous Materials Storage Building (located inside the Compressor Station) include:
  - Chemicals, hazardous materials, and wastes listed above with the exception of ethanol.
  - Universal waste
  - Compressed gas cylinders
- Potential hazardous materials/wastes to be used in remedy processes and stored at the main construction headquarter and the long-term remedy support area at Moabi Regional Park include:
  - Laboratory reagents and related waste
  - Cleaning solutions including solvents used for pumps and equipment
  - Oil used for pumps and equipment
  - Used oil hazardous waste
  - Used solvents hazardous waste
  - Universal waste
  - Compressed gas cylinders

Record Keeping

The following San Bernardino County Certified Unified Program Agency (CUPA) HMBP guidelines for record keeping will be adopted for the project:

- A copy of the HMBPs will be kept on site.
- The Cover Sheet, Business Activities Form, Business Owner/Operator Identification Form, and any other information that has changed is required to be updated by March 1 of every year.
- The entire HMBPs will be reviewed and re-certified every 3 years.
- The HMBPs will be revised within 30 days of change of: owner, business address, business name, emergency contact information, inventory, or other site conditions which may significantly impact emergency response (such as additional hazardous materials, increased quantities exceeding 50 percent of previously reported maximum quantity, and/or increased container sizes). PG&E will provide the revised Plan to the Agencies.

In addition, in compliance with Section XXV of the CD (DOI 2013), PG&E will maintain records for 10 years following receipt of certification of completion. At the conclusion of the record retention period, PG&E will notify DOI and DTSC in writing at least 90 days prior to the destruction of any records and will provide DOI and DTSC with the opportunity to take possession of any records.

San Bernardino County Fire Department • Hazardous Materials Division

620 South "E" Street, San Bernardino, CA 92415-0153 • PHONE (909) 386-8401 FAX (909) 386-8460 www.sbcfire.org

BUSINESS EMERGENCY/CONTINGENCY PLAN COVER SHEET

I. IDENTIFICATION

For Dept Use Only – Log In/Date Stamp

FACILITY ID #	F	A	0	0	0	9	1	5	0

BUSINESS NAME (Same as FACILITY NAME or DBA)

PG&E – Topock Groundwater Extraction Site

BUSINESS SITE ADDRESS	CITY	ZIPCODE
145453 National Trails Highway	Needles	92363

II. SUBMISSION CHECKLIST

(Complete this Section if submitting an entire Business Emergency/Contingency Plan whether new or revised)

Submission Checklist ☒

- ☒ Business Activities Form
- ☒ Business Owner/Operator Identification Form
- ☒ Supplemental Emergency Contact Page
- ☒ Emergency Response Plans and Procedures
- ☐ Hazardous Materials Inventory Summary Form for the facility listing materials (including wastes) by item number
- ☐ One Hazardous Materials Inventory Form for each hazardous material (including wastes) which meet reporting criteria
- ☐ Material Safety Data Sheets attached to the inventory form of each material not listed in Appendix I
- ☒ Facility map (using grid form provided) consisting of all required features including the location of each inventoried item
- ☐ Site map (using grid form provided) consisting of all required features including surrounding facilities and areas.
- ☒ Area map - photocopied city map with location of site indicated
- ☒ Owner/Operator has signed and dated the plan and all required individual pages of the plan
- ☒ Submit the original and 1 copy to the Hazardous Materials Division. One is for distribution to the local fire jurisdiction
- ☒ ***Retain one copy of the business emergency/contingency plan at the facility***.

III. UPDATE/CERTIFICATION

(Complete this Section if submitting a partial update or re-certifying an existing Plan)

Check the appropriate boxes below and sign the certification statement. Submit 2 copies of all update information.

- ☐ Please incorporate the following into my Business Emergency/Contingency Plan
  - ☐ New Business Owner/Operator Identification Form
  - ☐ New Inventory Forms and new Inventory Summary Form (and maps, if affected)
  - ☐ New Supplemental Emergency Contact Page
- ☐ Other: _____

Brief explanation of changes: _____

- ☐ There have been no changes to the inventory. In place of submitting the annual inventory, I hereby attest to all of the following:
  - The information contained in the inventory most recently submitted to the CUPA is complete, accurate and up to date.
  - There has been no change in the quantity, storage, or handling of hazardous materials (including waste) reported in the most recently submitted inventory.
  - No hazardous materials (including waste) subject to inventory requirements are being handled that are not listed on the most recently submitted inventory.
  - This certification is not being made to meet annual inventory submission requirements of EPCRA. (EPCRA requires complete annual submission)

IV. SIGNATURE

(Complete this Section for all submissions)

Certification - Based on my inquiry of those individuals responsible for obtaining the information, I certify under penalty of law that I have personally examined and am familiar with the information submitted on this document and believe the information is true, accurate and complete.

SIGNATURE OF OWNER/OPERATOR	DATE	NAME OF DOCUMENT PREPARER
Michelle Le	02-01-2014	Liza Marfori, Parsons

NAME OF SIGNER (print)	TITLE OF SIGNER (print)
Michelle Le	Hazardous Material Manager

Pacific Gas and Electric Company

WE DELIVER ENERGY.SM

HAZARDOUS MATERIALS BUSINESS PLAN

FOR

TOPOCK GROUNDWATER EXTRACTION SITE

145453 NATIONAL TRAILS HIGHWAY

NEEDLES, CA 92363

FEBRUARY 2014

HAZARDOUS MATERIALS BUSINESS PLAN – FEBRUARY 2014
TOPOCK GROUNDWATER EXTRACTION SITE

Table of Contents
for

Topock Groundwater Extraction Site

Facility Information Business Activities **1**

Business Owner/Operator Identification **2**

CUPA Form Emergency Response/Contingency Plan **3**

Employee Training Plan **6**

Recordkeeping **8**

Attachments

1 Facility Site Plan and Emergency Evacuation Map(s)

2 Hazardous Materials Inventory — Chemical Description

3 Hazardous Waste Inventory Statement

4 Agreements with Emergency Response Agencies

5 Emergency Response Procedure: Hazard Mitigation/Prevention/Abatement [19 CCR §2731(e)]

6 Emergency Response Procedure: Earthquake Vulnerability [19 CCR §2731(c)]

7 Hazardous Waste Generators – Miscellaneous Forms

8 Facilities Inspection Checklists

Business Activities
(Submitted online via CERS)

Site Identification

PG&E - Topock Groundwater Extraction Site
I 40 & Park Moabi Road
Needles, CA 92363
County
San Bernardino

CERS ID
10148425
EPA ID Number
CAR000151118

Submittal Status

Submitted on 1/31/2014 by *Megan Silva* of PG&E (San Ramon, CA)

Hazardous Materials

Does your facility have on site (for any purpose) at any one time, hazardous materials at or above 55 gallons for liquids, 500 pounds for solids, or 200 cubic feet for compressed gases (include liquids in ASTs and USTs); or is regulated under more restrictive inventory local reporting requirements (shown below if present); or the applicable Federal threshold quantity for an extremely hazardous substance specified in 40 CFR Part 355, Appendix A or B; or handle radiological materials in quantities for which an emergency plan is required pursuant to 10 CFR Parts 30, 40 or 70?	**Yes**

Underground Storage Tank(s) (UST)

Does your facility own or operate underground storage tanks?	**No**

Hazardous Waste

Is your facility a Hazardous Waste Generator?	**Yes**
Does your facility treat hazardous waste on-site?	**Yes**
Is your facility's treatment subject to financial assurance requirements (for Permit by Rule and Conditional Authorization)?	**Yes**
Does your facility consolidate hazardous waste generated at a remote site?	**No**
Does your facility need to report the closure/removal of a tank that was classified as hazardous waste and cleaned on-site?	**No**
Does your facility generate in any single calendar month 1,000 kilograms (kg) (2,200 pounds) or more of federal RCRA hazardous waste, or generate in any single calendar month, or accumulate at any time, 1 kg (2.2 pounds) of RCRA acute hazardous waste; or generate or accumulate at any time more than 100 kg (220 pounds) of spill cleanup materials contaminated with RCRA acute hazardous waste.	**No**
Is your facility a Household Hazardous Waste (HHW) Collection site?	**No**

Excluded and/or Exempted Materials

Does your facility recycle more than 100 kg/month of excluded or exempted recyclable materials (per HSC 25143.2)?	**Yes**
Does your facility own or operate ASTs above these thresholds? Store greater than 1,320 gallons of petroleum products (new or used) in aboveground tanks or containers.	**No**
Does your facility have Regulated Substances stored onsite in quantities greater than the threshold quantities established by the California Accidental Release prevention Program (CalARP)?	**No**

Additional Information

No additional comments provided.

Business Owner/Operator Identification
(Submitted online via CERS)

Facility/Site

PG&E - Topock Groundwater Extraction Site
I 40 & Park Moabi Road
Needles, CA 92363

CERS ID
10148425

Submittal Status

Submitted on 1/31/2014 by *Megan Silva* of PG&E (San Ramon, CA)

Identification

Pacific Gas & Electric Company

Operator Phone	Business Phone	Business Fax
(760) 326-5582	(760) 326-3328	(760) 326-5542

Beginning Date	Ending Date	
1/31/2014	1/30/2015	
Dun & Bradstreet	**SIC Code**	**Primary NAICS**
006912877	4922	221210

Facility/Site Mailing Address

PG&E - CUPA Permits (REF: Topock Groundwater), PO Box 7640
San Francisco, CA 94120

Primary Emergency Contact

Curt Russell
Title
Environmental Consultant

Business Phone	24-Hour Phone	Pager Number
(760) 326-5582	(800) 547-5955	

Owner

Pacific Gas & Electric Company
(415) 973-7000
C/o Environmental Services Department, 3401 Crow Canyon Road
San Ramon, CA 94583

Secondary Emergency Contact

Diana Williams
Title
Environmental Supervisor

Business Phone	24-Hour Phone	Pager Number
(925) 270-8209	(800) 874-4043	

Billing Contact

PG&E - CUPA Permits (REF: Topock Groundwater)
(209) 932-2556 HazMat@pge.com
PO Box 7640
San Francisco, CA 94120

Environmental Contact

Valeri Hirst
(760) 253-7847 vjh5@pge.com
35863 Fairview Road
Hinkley, CA 92347

Name of Signer	Signer Title	Document Preparer
Michelle Le	Hazardous Material Manager	Liza Marfori, Parsons

Additional Information

Locally-collected Fields

Some or all of the following fields may be required by your local regulator(s).

Property Owner

Phone

Mailing Address

,

Assessor Parcel Number (APN)

Number of Employees
10

Facility ID
FA0009150

San Bernardino County Fire Department • **Hazardous Materials Division**

620 South "E" Street, San Bernardino, CA 92415-0153 • PHONE (909) 386-8401 FAX (909) 386-8460 www.sbcfire.org

EMERGENCY CONTACTS

BUSINESS NAME (Same as FACILITY NAME or DBA)
PG&E – Topock Groundwater Extraction Site

A business shall appoint an Emergency Coordinator and Alternate Emergency Coordinator. These persons shall be knowledgeable in all aspects of the business operation. In the event of a release or threatened release of hazardous materials, the Emergency Coordinators shall be responsible for initiating response actions by the business. The Emergency Coordinators shall have full access to the facility, site familiarity and authority to make decisions for the business and to commit business resources. Hazardous waste generators must provide the information required in Title 22 of the California Code of Regulations and must list all emergency coordinators in the order that they will assume responsibility.

ONLY Emergency Contacts listed on this separate page will be held as confidential.

NAME	TITLE
Curt Russell	Environmental Consultant

OFFICE ADDRESS
145453 National Trails Highway, Needles, CA 92363

OFFICE PHONE	HOME PHONE	OTHER 24 HR PHONE (PAGER/CELL) 127
(760) 326-5582	(760) 791-5884 (Cell)	(800) 547-5955 (24-Hour)

NAME	TITLE
Diana Williams	Environmental Operations Supervisor

OFFICE ADDRESS
6111 Bollinger Canyon Road, San Ramon, CA 94583

OFFICE PHONE	HOME PHONE 126	OTHER 24 HR PHONE (PAGER/CELL) 127
(925) 328-5045	(925) 270-8209 (Cell)	(800) 874-4043 (24-Hour)

NAME	TITLE
Valeri Hirst	Environmental Field Specialist

OFFICE ADDRESS
35863 Fairview Road, Hinkley, CA 92347

OFFICE PHONE	HOME PHONE	OTHER 24 HR PHONE (PAGER/CELL) 127
(760) 253-7847	(760) 577-4642 (Cell)	(800) 874-4043 (24-Hour)

EMERGENCY RESPONSE TEAM (OWN EMPLOYEES OR CONTRACT) –IF APPLICABLE

NAME	24-HOUR PHONE
PSC Industrial Outsourcing Inc.	(800) 321-1030
NAME	24-HOUR PHONE
NAME	24-HOUR PHONE
NAME	24-HOUR PHONE

Date: 02-01-2014

San Bernardino County Fire Department • Hazardous Materials Division

620 South "E" Street, San Bernardino, CA 92415-0153 • PHONE (909) 386-8401 FAX (909) 386-8460 www.sbcfire.org

EMERGENCY RESPONSE PLANS & PROCEDURES – AGENCY NOTIFICATION

BUSINESS NAME (Same as FACILITY NAME or DBA) 3

Pacific Gas and Electric Company – Topock Groundwater Extraction Site

POST BY TELEPHONE

Agency Notification: **If a situation is an emergency, call 911 first.** Additionally, a handler of hazardous materials is required to immediately report any release or threatened release of a hazardous material to San Bernardino County Fire Department, Hazardous Materials Division and the Governor's Office of Emergency Services. Spills exceeding Federal reportable quantities require additional notification to the National Response Center. However, California statute does not limit the requirement to report to any specific quantity. **Also note that calling 911 does not meet the requirement for the handler to report a release and that the local fire department cannot make required notifications on behalf of the handler.** This CUPA requires a written report within 15 days after any reportable release or threatened release. Contact the CUPA for further guidance.

Agency (* Indicates mandatory notification)	**Phone Number**
1. ***Local Emergency Response Agency (if an emergency)	**911**
2. ***San Bernardino County Fire Department Hazardous Materials Division	**(800) 33-TOXIC** or **(909) 386-8425**

*Note: (800) 33-TOXIC does not work nationwide; non-local callers must use (909) 386-8425 to report **any** release or threatened release.*

3. * State of California, Governor's Office of Emergency Services (CalOES) **(800) 852-7550** or **(916) 845-8911**
4. National Response Center (**800) 424-8802**
5. 5. Other Agencies *(Cal OSHA, Regional Board, Air Quality, as applicable)*

Agency Name	*Phone Number*
Needles Fire Department	760-326-2833
Aaron Yue, DTSC	Work: 714-484-5439 Cell: 714-493-6429 Home: 626-913-9189
San Bernardino County Sheriff's Department	760-326-9200
Mojave Desert Air Quality Management District	760-245-1661
Jeff Smith, U.S. Bureau of Reclamation, Regional HazMat Coordinator	Work: 702-378-2400 Cell: 702-293-8060 Home: 702-567-1586
Colorado River Medical Center	760-326-4531
Cathy Wolff-White; US, Department of Interior, Bureau Land Management	928-505-1309

EMERGENCY INFORMATION REQUIRED: BE PREPARED TO PROVIDE THE FOLLOWING INFORMATION

- Name & phone number of person reporting
- Name and street address of the business
- Location of the incident or threatened release
- Type of incident or threatened release
- Hazardous materials involved & physical state
- Hazards to human health and/or environment
- Actions taken or planned
- Contractor or cleanup company name
- Estimate of the quantity released
- Media (soil, water, air) into which release occurred
  - Precautions to take (if known)
- Time and duration of the release
  - Is the chemical an extremely hazardous substance?
  - Extent of injuries, if any
- Is any assistance required?

Release reporting citations (California Health and Safety Code):

§ 25501. Definitions:

(r) "Release" means any spilling, leaking, pumping, pouring, emitting, emptying, discharging, injecting, escaping, leaching, dumping, or disposing into the environment, unless permitted or authorized by a regulatory agency.

(u) "Threatened release," means a condition creating a substantial probability of harm, when the probability and potential extent of harm make it reasonably necessary to take immediate action to prevent, reduce, or mitigate damages to persons, property, or the environment.

§ 25507(a) … the handler or any employee, authorized representative, agent, or designee of a handler shall, upon discovery, immediately report any release or threatened release of a hazardous material to the administering agency, and to the office, in accordance with the regulations adopted pursuant to Section 25503. Each handler and any employee, authorized representative, agent, or designee of a handler shall provide all state, city, or county fire or public health or safety personnel and emergency rescue personnel with access to the handler's facilities.

See Appendix G for further citations and explanation.

Date: 02-01-2014

San Bernardino County Fire Department • Hazardous Materials Division

620 South "E" Street, San Bernardino, CA 92415-0153 • PHONE (909) 386-8401 FAX (909) 386-8460 www.sbcfire.org

EMERGENCY RESPONSE PLANS AND PROCEDURES

BUSINESS NAME (Same as FACILITY NAME or DBA)

Pacific Gas and Electric Company – Topock Groundwater Extraction Site

State Law requires your business to complete all sections of the Emergency Response Procedure listed below:
For each of the following, **briefly** describe your business's standard operating procedures relating to the release or threatened release of hazardous materials located at your facility. You may attach additional pages if necessary, but do not include copies of facility manuals unless requested to do so by this Department. You may reference manuals that are used by your facility for these procedures, but you must still give a brief description here.

EVACUATION/NOTIFICATION: Indicate location(s) where employees, customers, visitors or others on site are to evacuate in an emergency. Describe how your business will immediately notify people and evacuate the facility in the event of a release or threatened release of hazardous materials. Include the route and meeting place.

Evacuation of the facility will occur as a response to an incident with known or unknown hazards that could pose a threat to the health and/or safety of facility personnel. All facility personnel have been trained in the evacuation routes for their work stations and other areas of the facility. An assembly point is designated inside the main entrance to the facility. The decision to evacuate is the responsibility of the Facility Emergency Coordinator or the Shift Supervisor. He/she will determine the extent of the evacuation. Evacuation signals are provided by either radio or given verbally.

PREVENTION/MITIGATION/ABATEMENT: Describe what policies and procedures your business will follow to prevent, reduce and/or remove the hazard to persons, property or the environment caused by a release or threatened release of hazardous materials and/or hazardous wastes. (√ Check those items that apply and write additional information in the space provided).

☒ Reduction of containers on site if not used or needed
☒ Containers are properly labeled and closed when not in use
☐ Compressed gas cylinders are properly secured
☒ Use of monitoring system Type: **Automated Systems Fail-Safe Alarms – high level shutdown alarms in tanks**
☒ Other:

Secondary containment for tanks (tanks and associated piping)
Drip pads placed to collect incidental spills during loading operations
Operator observation of loading of groundwater into tanker trucks
Daily inspection of tank systems in accordance with 22 CCR
Initial and refresher training of personnel managing hazardous materials and groundwater treatment
This information can be found in Attachment 5.

Date: 02-01-2014

EMERGENCY RESPONSE PLANS AND PROCEDURES

BUSINESS NAME (Same as FACILITY NAME or DBA)

Pacific Gas and Electric Company – Topock Groundwater Extraction Site

FACILITY TRAINING PLAN: Describe employee and operator training including local emergency response coordination, use of facility emergency equipment, and provisions for initial and refresher training. In addition, describe training for hazardous materials/waste handling as required by OSHA. (√ Check those items that apply and write additional information in the space provided)

- ☒ New employee training
- ☒ Annual training & periodic refresher courses
- ☒ Familiarization with the Emergency Response Plans and Procedures of this Business Plan
- ☒ Spill control equipment
- ☒ Monitoring system
- ☒ Personal Protective Equipment
- ☐ On the job training (Described below)
- ☒ Other:

In addition to training in emergency response measures, personnel will be trained in responsibilities related to:

- Operating treatment system
- Loading of trucks
- Sampling and field analysis of round water samples
- Conducting general site and tank system inspections
- Tracking of manifests
- Operating portable generator
- System operators are 40-hour HAZWOPER trained

EMERGENCY PROCEDURES: Describe duties of the Emergency Coordinator and how implementation of Facility Emergency Response will be accomplished. (e.g. Notification, evacuation, emergency coordination) (√ Check those items that apply and write additional information in the space provided)

Emergency Coordinator will:

- ☒ Identify potential hazards and determine whether a release has occurred
- ☒ Activate local emergency systems (e.g. manual shutoff devices) and take appropriate immediate actions based on level of training and the ability to act safely
- ☒ Coordinate the notification and evacuation of employees, customers, and other visitors from the facility
- ☒ Make required agency notifications and request needed assistance
- ☒ Assist responding agencies by providing access to the facility and information about the facility
- ☐ Other:

Date: 02-01-2014

San Bernardino County Fire Department • Hazardous Materials Division

620 South "E" Street, San Bernardino, CA 92415-0153 • PHONE (909) 386-8401 FAX (909) 386-8460 www.sbcfire.org

EMERGENCY RESPONSE PLANS AND PROCEDURES

BUSINESS NAME (Same as FACILITY NAME or DBA)
3
Pacific Gas and Electric Company – Topock Groundwater Extraction Site

FACILITY EMERGENCY EQUIPMENT: List facility emergency equipment on site (e.g. fire extinguisher, fire alarms, spill control equipment, SCBA, first aid kits, etc.). Include test/maintenance plan. (√ Check those items that apply and write additional information in the space provided)

	Equipment	Quantity/Type	Maintenance Schedule/Frequency
☒	Fire extinguisher(s)	**12 (ABC) Dry Chemical; 4 (BC) Carbon dioxide**	**Monthly Inspections**
☒	First aid kit(s)	**2**	**Monthly Inspections**
☒	Fire alarm(s)	**2**	**Monthly Inspections**
☒	Spill control equipment		**At Topock Compressor Station**
	Shovels		**See Emergency Equipment Table**
	Spill Kits		
	Pump		
☒	Monitoring system	**Multiple equipment with various alarm systems**	**Monthly Inspections**
☒	Personal Protective Equipment		**Monthly Inspections**
☒	Gloves		**Monthly Inspections**
☒	Safety Glasses		**Monthly Inspections**

FACILITY EARTHQUAKE RESPONSE: Identify areas of the facility as well as mechanical or other systems that require immediate inspection due to their vulnerability to earthquake related ground motion. (e.g. Hazardous materials or waste storage locations, vessels, piping, pipe and tank supports, valves, gauges, etc.) (√ Check those items that apply and write additional information in the space provided)

- ☒ Chemical Storage Locations – Product and Waste
- ☒ Process vessels
- ☒ Aboveground storage tanks
- ☐ Emergency shut-off systems
- ☒ Piping and pipe supports
- ☐ Utility connections
- ☒ Groundwater Well Heads
- ☒ Auxiliary fuel supply for generator

This information can be found in Attachment 6.

ARRANGEMENTS/AGREEMENTS: Describe any arrangements or agreements that you have with private emergency response teams, waste haulers, disposal companies, recyclers, local hospitals, police and/or fire. If you have no arrangements or agreements, state that fact in the space provided. (√ Check those items that apply and write additional information in the space provided)

- ☒ Hazardous waste hauler **PSC Industrial Outsourcing Inc., (800) 321-1030**
- ☒ Emergency response team **Sheriff and Fire Departments**
- ☒ Local hospitals **Colorado River Medical Center**
- ☒ Other: **See Attachment 4**
- ☐ No arrangements or agreements at this time

Date: 02-01-2014

Emergency Equipment

22 CCR §66265.52(e) [as referenced by 22 CCR §66262.34(a)(4)] requires that emergency equipment at the facility be listed. Completion of the following Emergency Equipment Inventory Table meets this requirement.

Emergency Equipment Inventory Table

1. Equipment Category	2. Equipment Type	3. Locations*	4. Description**
Personal Protective Equipment, Safety Equipment, and First Aid Equipment	☒ Cartridge Respirators	Topock Groundwater Extraction Site	Personal Protection
	☐ Chemical Monitoring Equipment *(describe)*		
	☒ Chemical Protective Aprons/Coats	Topock Groundwater Extraction Site	Personal Protection
	☒ Chemical Protective Boots	Topock Groundwater Extraction Site	Personal Protection
	☒ Chemical Protective Gloves	Topock Groundwater Extraction Site	Personal Protection
	☒ Chemical Protective Suits: *Coveralls*	Topock Groundwater Extraction Site	Personal Protection
	☒ Face Shields	Topock Groundwater Extraction Site	Personal Protection
	☒ First Aid Kits/Stations *(describe)*	See Facility Layout Map	Personal Protection
	☒ Hard Hats	Vehicles and on-site	Company Issued
	☒ Plumbed Eye Wash Stations	See Facility Layout Map	Personal Protection
	☐ Portable Eye Wash Kits *(i.e., bottle type)*		
	☒ Respirator Cartridges *(describe)*	Topock Groundwater Extraction Site	Personal Protection
	☒ Safety Glasses/Splash Goggles	Topock Groundwater Extraction Site	Personal Protection
	☒ Safety Showers	Topock Groundwater Extraction Site	Personal Protection
	☐ Self-Contained Breathing Apparatuses (SCBA)		
	☐ Other *(describe)*		
Fire Extinguishing Systems	☐ Automatic Fire Sprinkler Systems		
	☒ Fire Alarm Boxes/Stations	See Facility Layout Map	
	☐ Fire Extinguisher Systems *(describe)*		
	☒ Fire Extinguishers *(describe)*	See Facility Layout Map	
	☐ Other *(describe)*		
Spill Control Equipment and Decontamination Equipment	☒ Absorbents *(describe)*	See Facility Layout Map	Spill Cleanup
	☒ Berms/Dikes *(describe)*	See Facility Layout Map	Spill Cleanup
	☒ Decontamination Equipment *(describe)*	See Facility Layout Map	Spill Cleanup
	☐ Emergency Tanks *(describe)*		
	☐ Exhaust Hoods		
	☐ Gas Cylinder Leak Repair Kits *(describe)*		
	☒ Neutralizers *(describe)*	See Facility Layout Map	Spill Cleanup
	☒ Overpack Drums	See Facility Layout Map	5, 55 and 95-gallon drums
	☐ Sumps *(describe)*		
	☐ Other *(describe)*		
Communications and Alarm Systems	☐ Chemical Alarms *(describe)*		
	☐ Intercoms/ PA Systems		
	☒ Portable Radios	Vehicles	Communication
	☒ Telephones	Operations Building	Communication
	☐ Tank Leak Detection Systems		
	☒ Other: *Cell phones*	Vehicles	Communication
Additional Equipment *(Use Additional Pages if Needed.)*	☐		
	☐		
	☐		
	☐		
	☐		

* **Note:** Small barrels containing absorbent compound, spill control pillows or absorbent socks, gloves etc, in small quantity can also be found at the facility.

** Describe the equipment and its capabilities. If applicable, specify any testing/maintenance procedures/intervals. Attach additional pages, numbered appropriately, if needed.

Record Keeping

Emergency Response/Contingency Plan (Hazardous Materials Business Plan Module)

All facilities that handle hazardous materials must maintain records associated with their management. A summary of your record keeping procedures is a required module of the Unidocs Hazardous Materials Business Plan (HMBP). A blank summary has been provided below for you to complete and submit if you do not already have such a document. **If you already have a brief written description of your hazardous materials record keeping systems that addresses all subjects covered below, you are not required to complete this page, but you must include a copy of your existing document as part of your HMBP.**

Check all boxes that apply. The following records are maintained at the facility.
Note: Items marked with an asterisk (*) are required.

☒	Current employees' training records *(to be retained until closure of the facility)* *
☒	Former employees' training records *(to be retained at least three years after termination of employment)* *
☒	Training Program(s) *(i.e., written description of introductory and continuing training)* *
☒	Current copy of this Emergency Response/Contingency Plan *
☒	Record of recordable/reportable hazardous material/waste releases *
☒	Record of hazardous material/waste storage area inspections *
☒	Record of hazardous waste tank daily inspections *
☐	Description and documentation of facility emergency response drills

Note: The above list of records does not necessarily identify every type of record required to be maintained by the facility.

Note: The following section applies where local agencies require facility owners/operators to perform and document routine facility self-inspections,

A copy of the Inspection Check Sheet(s) or Log(s) used in conjunction with required routine self-inspections of your facility must be submitted with your HMBP. *[Exception: Unidocs provides a Hazardous Materials/Waste Storage Area Inspection Form that you may use if you do not already have your own form. If you use the Unidocs form (available at* **www.unidocs.org***), you do not need to attach a copy.]*

Check the appropriate box:

☐	We will use the Unidocs "Hazardous Materials/Waste Storage Area Inspection Form" to document inspections.
☒	We will use our own documents to record inspections. ***(A blank copy of each document used must be attached to this HMBP.)***

Attachment 1

Facility Site Plan and Emergency Evacuation Map(s)

(Submitted online via CERS)

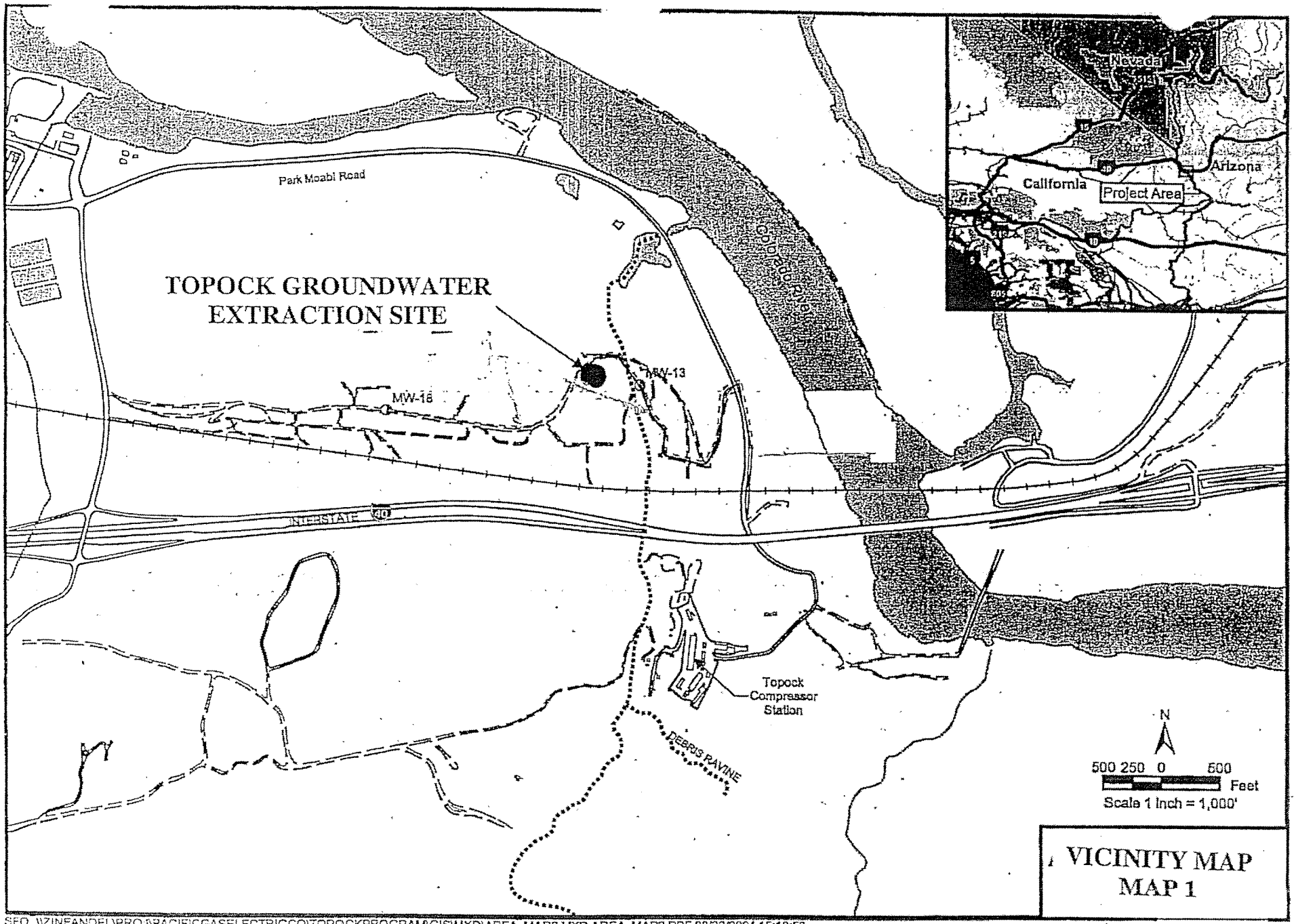

VICINITY MAP
MAP 1

SFO \\ZINFANDEL\PROJ\PACIFICGASELECTRICCO\TOPOCKPROGRAM\GIS\MXD\AREA_MAP2.MXD AREA_MAP2.PDF 08/23/2004 15:18:53

FACILITY DETAIL MAP 2	SAN BERNARDINO COUNTY	BUSINESS NAME: Pacific Gas & Electric Co. TOPOCK GROUNDWATER EXTRACTION SITE	SCALE 1"= 30 FT.

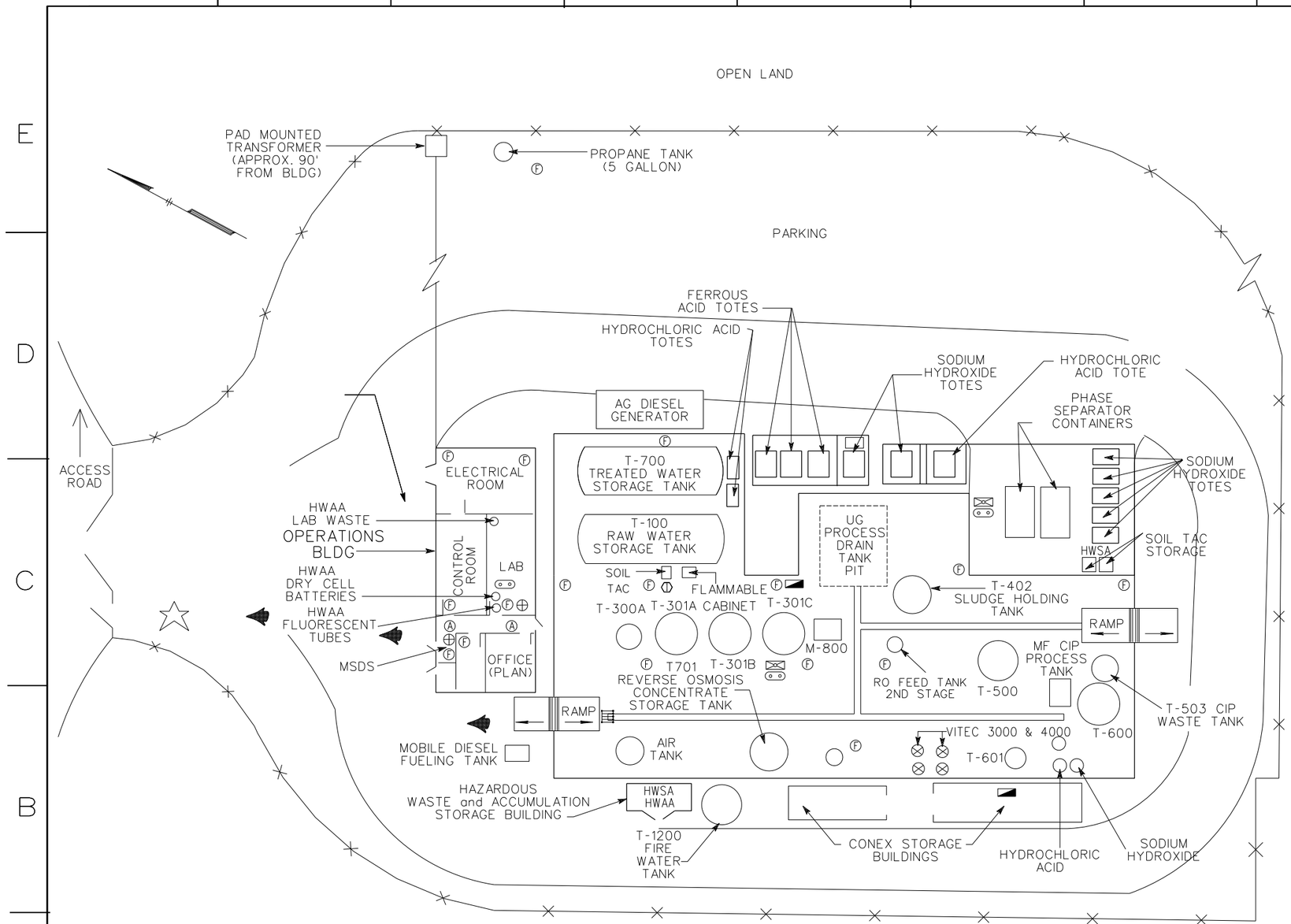

LEGEND

SYMBOL	DESCRIPTION
Ⓕ	FIRE EXTINGUISHER
F	FIRE STATION
	FIRE HOSE CART
	FIRE HOSE BOX
	SPILL CONTROL EQUIPMENT
	WALK DOOR
	ROLL-UP DOOR
	DIRECTION OF SHEET FLOW
	DIRECTION OF DRAINAGE FLOW
	CHAIN LINK FENCE
	PROPERTY LINE
-D->	STORM DRAIN
-S->	SEWER LINE
	CATCH BASIN
UG	UNDERGROUND
AG	ABOVEGROUND
HWAA	HAZARDOUS WASTE ACCUMULATION AREA
HWSA	HAZARDOUS WASTE STORAGE AREA
Ⓐ	ALARM PULL STATION
⊕	FIRST AID KIT
	EMERGENCY EYE WASH
	EMERGENCY SHOWER
(2)	ITEM NUMBER FROM INVENTORY SUMMARY
US	SUMP
	IGNITABLE
N	COMPRESSED GAS (NON-FLAMMABLE)
F	COMPRESSED GAS (FLAMMABLE)
	CORROSIVE
R	REACTIVE
	TOXIC
W	MAIN WATER SHUT-OFF
E	MAIN ELECTRIC SHUT-OFF
G	MAIN GAS SHUT-OFF
M	FUEL / CNG EMERGENCY SHUT-OFF
M	EMERGENCY SHUTDOWN STATION PULL HANDLE
	VALVE
	EVACUATION ROUTE
	ASSEMBLY AREA

updated for HMBP 03-2012 (Parsons)
topockextr.env

MAP 2

Attachment 2

Hazardous Materials Inventory

(Submitted online via CERS)

Non-Waste Hazardous Materials Inventory Matrix Report

CERS Business/Org. **PG&E**
Facility Name **PG&E: Topock Groundwater Extraction Site**
I 40 & Park Moabi Road, Needles 92363

Chemical Location **OPERATIONS BUILDING / MOBILE GENERATOR; YARD / DIESEL GENERATOR**

CERS ID **10148425**
Facility ID **FA0009150**
Status **Submitted** on 1/31/2014 12:18 PM

DOT Code/Fire Haz. Class	Common Name	Unit	Quantities: Max. Daily	Quantities: Largest Cont.	Quantities: Avg. Daily	Annual Waste Amount	Federal Hazard Categories	Hazardous Components (For mixture only): Component Name	% Wt	EHS	CAS No.
DOT: 3 - Flammable and Combustible Liquids Combustible Liquid, Class II, Irritant	**DIESEL FUEL, HS, #2** CAS No Map: 1 Grid: B3, D4	**Gallons** State: Liquid Storage Container: Other Type: Mixture Days on Site: 365	**505**	**400**	337 Pressue: Ambient Temperature: Ambient	0 Waste Code	- Fire - Acute Health	FUELS, DIESEL, NO. 2 GAS OIL, LIGHT HYDRODESULFURIZED MIDDLE DISTILLATE	100 % 0 % 0 %		 64741-44-2 64742-80-9

Non-Waste Hazardous Materials Inventory Matrix Report

CERS Business/Org. **PG&E**
Facility Name **PG&E: Topock Groundwater Extraction Site**
I 40 & Park Moabi Road, Needles 92363

Chemical Location **WATER TREATMENT AREA / AIR PRESSURE TANK**

CERS ID **10148425**
Facility ID **FA0009150**
Status **Submitted** on 1/31/2014 12:18 PM

DOT Code/Fire Haz. Class	Common Name	Unit	Quantities: Max. Daily	Quantities: Largest Cont.	Quantities: Avg. Daily	Annual Waste Amount	Federal Hazard Categories	Hazardous Components (For mixture only): Component Name	% Wt	EHS	CAS No.
DOT: 2.2 - Nonflammable Gases	**COMPRESSED AIR**	**Cu. Feet**	**985**	**985**	985	0	- Pressure Release	NITROGEN	80 %		7727-37-9
								OXYGEN	20 %		7782-44-7
Other Health Hazard	CAS No	State: Gas	Storage Container: Aboveground Tank		Pressue: > Ambient	Waste Code					
	Map: 1 Grid: B4	Type: Mixture	Days on Site: 365		Temperature: Ambient						

Non-Waste Hazardous Materials Inventory Matrix Report

CERS Business/Org. **PG&E**
Facility Name **PG&E: Topock Groundwater Extraction Site**
I 40 & Park Moabi Road, Needles 92363

Chemical Location **WATER TREATMENT AREA / CHEMICAL STORAGE**

CERS ID **10148425**
Facility ID **FA0009150**
Status **Submitted** on 1/31/2014 12:18 PM

DOT Code/Fire Haz. Class	Common Name	Unit	Quantities: Max. Daily	Quantities: Largest Cont.	Quantities: Avg. Daily	Annual Waste Amount	Federal Hazard Categories	Hazardous Components (For mixture only): Component Name	% Wt	EHS	CAS No.
Irritant	**FERROUS CHLORIDE SOLUTION** CAS No Map: 1 Grid: C5D6	**Gallons** State: Liquid Type: Mixture	**1,540** Storage Container: Tote Bin Days on Site: 365	**330**	1,027 Pressue: Ambient Temperature: Ambient	0 Waste Code	- Acute Health	FERRIC CHLORIDE FERROUS CHLORIDE HYDROCHLORIC ACID MAGNESIUM CHLORIDE	1 % 37 % 1 % 4 %	 ✓ 	7705-08-0 7758-94-3 7647-01-0 7786-30-3
Irritant	**HYDROCHLORIC ACID 31%** CAS No Map: 1 Grid: C5D6	**Gallons** State: Liquid Type: Mixture	**110** Storage Container: Steel Drum Days on Site: 365	**55**	73 Pressue: Ambient Temperature: Ambient	0 Waste Code	- Reactive - Acute Health	HYDROCHLORIC ACID	31 %	✓	7647-01-0
	HYPOCHLORITE SOLUTION CAS No Map: 1 Grid: C5D6	**Gallons** State: Liquid Type: Mixture	**65** Storage Container: Plastic Bottle or Jug Days on Site: 365	**5**	43 Pressue: Ambient Temperature: Ambient	Waste Code	- Reactive - Acute Health	SODIUM HYPOCHLORITE	13 %		7681-52-9
Corrosive	**SODIUM HYDROXIDE 25%** CAS No Map: 1 Grid: C5D6	**Gallons** State: Liquid Type: Mixture	**2,240** Storage Container: Other Days on Site: 365	**330**	1,501 Pressue: Ambient Temperature: Ambient	0 Waste Code	- Reactive - Acute Health	SODIUM HYDROXIDE	25 %		1310-73-2

Non-Waste Hazardous Materials Inventory Matrix Report

CERS Business/Org. **PG&E**
Facility Name **PG&E: Topock Groundwater Extraction Site**
I 40 & Park Moabi Road, Needles 92363

Chemical Location **WATER TREATMENT AREA / CHEMICAL STORAGE, NEAR T -100 STORAGE TANK, NEAR TANKS T-500-601**

CERS ID **10148425**
Facility ID **FA0009150**
Status **Submitted** on 1/31/2014 12:18 PM

DOT Code/Fire Haz. Class	Common Name	Unit	Quantities: Max. Daily	Quantities: Largest Cont.	Quantities: Avg. Daily	Annual Waste Amount	Federal Hazard Categories	Hazardous Components (For mixture only): Component Name	% Wt	EHS	CAS No.
	HYDROCHLORIC ACID 19%	**Gallons**	**900**	**300**	600	0	- Reactive - Acute Health	HYDROCHLORIC ACID	10 %	✓	7647-01-0
Irritant	CAS No	State: Liquid	Storage Container: Steel Drum, Tote Bin		Pressue: Ambient	Waste Code					
	Map: 1 Grid: C5D6, C4, B6-C7	Type: Mixture	Days on Site: 365		Temperature: Ambient						

Non-Waste Hazardous Materials Inventory Matrix Report

CERS Business/Org. **PG&E**
Facility Name **PG&E: Topock Groundwater Extraction Site**
I 40 & Park Moabi Road, Needles 92363

Chemical Location **WATER TREATMENT AREA / CONEX STO BLDG#1**

CERS ID **10148425**
Facility ID **FA0009150**
Status **Submitted** on 1/31/2014 12:18 PM

DOT Code/Fire Haz. Class	Common Name	Unit	Quantities: Max. Daily	Quantities: Largest Cont.	Quantities: Avg. Daily	Annual Waste Amount	Federal Hazard Categories	Hazardous Components (For mixture only): Component Name	% Wt	EHS	CAS No.
Other	**WT-2027 ANIONIC ACRYLAMIDE COPOLYMER POWDER** CAS No Map: 1 Grid: B6	**Pounds** State: Solid Type: Mixture	**2,000** Storage Container: Bag Days on Site: 365	**55**	1,333 Pressue: Ambient Temperature: Ambient	0 Waste Code	- Acute Health	ANIONIC ACRYLAMIDE COPOLYMER POWDER			

Non-Waste Hazardous Materials Inventory Matrix Report

CERS Business/Org. **PG&E**
Facility Name **PG&E: Topock Groundwater Extraction Site**
I 40 & Park Moabi Road, Needles 92363

Chemical Location **WATER TREATMENT AREA / NEAR TANKS T-500-601**

CERS ID **10148425**
Facility ID **FA0009150**
Status **Submitted** on 1/31/2014 12:18 PM

DOT Code/Fire Haz. Class	Common Name	Unit	Quantities: Max. Daily	Quantities: Largest Cont.	Quantities: Avg. Daily	Annual Waste Amount	Federal Hazard Categories	Hazardous Components (For mixture only): Component Name	% Wt	EHS	CAS No.
	VITEC 3000 NSF	**Gallons**	**110**	**55**	73	0	- Acute Health	Phosphonic Acid	27 %		2809-21-4
Irritant	CAS No	State: Liquid	Storage Container: Plastic/Non-metalic Drum		Pressue: Ambient	Waste Code					
	Map: 1 Grid: B6-C7	Type: Mixture	Days on Site: 365		Temperature: Ambient						
	VITEC 4000 NSF	**Gallons**	**110**	**55**	73	0	- Acute Health	ACRYLIC COPOLYMER	20 %		
								Phosphonic Acid	10 %		2809-21-4
Irritant	CAS No	State: Liquid	Storage Container: Plastic/Non-metalic Drum		Pressue: Ambient	Waste Code					
	Map: 1 Grid: B6-C7	Type: Mixture	Days on Site: 365		Temperature: Ambient						

Non-Waste Hazardous Materials Inventory Matrix Report

CERS Business/Org. **PG&E**
Facility Name **PG&E: Topock Groundwater Extraction Site**
I 40 & Park Moabi Road, Needles 92363

Chemical Location **WATER TREATMENT AREA / PHASE SEPARATOR CONTAINER**

CERS ID **10148425**
Facility ID **FA0009150**
Status **Submitted** on 1/31/2014 12:18 PM

DOT Code/Fire Haz. Class	Common Name	Unit	Quantities Max. Daily	Largest Cont.	Avg. Daily	Annual Waste Amount	Federal Hazard Categories	Hazardous Components (For mixture only) Component Name	% Wt	EHS	CAS No.
	SOILTAC	**Gallons**	**825**	**275**	550	0	- Acute Health	COPOLYMER OF STYRENE AND DIVINYLBENZENE	60 %		60177-39-1
	CAS No	State: Liquid	Storage Container: Other		Pressue: Ambient	Waste Code					
Irritant	Map: 1 Grid: C6-7	Type: Mixture	Days on Site: 365		Temperature: Ambient						

Non-Waste Hazardous Materials Inventory Matrix Report

CERS Business/Org. **PG&E**
Facility Name **PG&E: Topock Groundwater Extraction Site**
I 40 & Park Moabi Road, Needles 92363

Chemical Location **YARD / PAD MOUNT TRANSFORMER**

CERS ID **10148425**
Facility ID **FA0009150**
Status **Submitted** on 1/31/2014 12:18 PM

DOT Code/Fire Haz. Class	Common Name	Unit	Quantities: Max. Daily	Quantities: Largest Cont.	Quantities: Avg. Daily	Annual Waste Amount	Federal Hazard Categories	Hazardous Components (For mixture only): Component Name	% Wt	EHS	CAS No.
	DIALA OIL AX	**Gallons**	**120**	**120**	120	0	- Fire	BUTYLATED HYDROXY TOLUENE	0 %		128-37-0
Combustible Liquid, Class III-B	CAS No	State: Liquid	Storage Container: Other		Pressue: Ambient	Waste Code	- Acute Health	HYDROTREATED LIGHT NAPHTHENIC DISTILLATE	74 %		64742-53-6
	Map: 1 Grid: E3	Type: Mixture	Days on Site: 365		Temperature: > Ambient			HYDROTREATED MIDDLE DISTILLATE	25 %		64742-46-7

Attachment 3

Hazardous Waste Inventory

(Submitted online via CERS)

Hazardous Wastes Inventory Matrix Report

CERS Business/Org.	**PG&E**	Chemical Location	CERS ID **10148425**
Facility Name	**PG&E: Topock Groundwater Extraction Site** I 40 & Park Moabi Road, Needles 92363	**OPERATIONS BUILDING / CONTROL ROOM; WATER TREATMENT AREA / HWAA/HWSA**	Facility ID **FA0009150** Status **Submitted** on 1/31/2014 12:18 PM

DOT Code/Fire Haz. Class	Common Name	Unit	Quantities: Max. Daily	Quantities: Largest Cont.	Quantities: Avg. Daily	Annual Waste Amount	Federal Hazard Categories	Hazardous Components (For mixture only): Component Name	% Wt	EHS	CAS No.
	WASTE DRY CELL BATTERIES	**Pounds**	**50**	**50**	33	0	- Acute Health	MANGANESE DIOXIDE	37 %		1313-13-9
	CAS No	State	Storage Container		Pressue	Waste Code		POTASSIUM HYDROXIDE	8 %		1310-58-3
Other		Solid	Plastic/Non-metalic Drum		Ambient	181		ZINC	15 %		7440-66-6
	Map: 1 Grid: C3, B3-B4	Type			Temperature						
		Waste	Days on Site: 365		Ambient						

Hazardous Wastes Inventory Matrix Report

CERS Business/Org. **PG&E**
Facility Name **PG&E: Topock Groundwater Extraction Site**
I 40 & Park Moabi Road, Needles 92363

Chemical Location **OPERATIONS BUILDING / LAB**

CERS ID **10148425**
Facility ID **FA0009150**
Status **Submitted** on 1/31/2014 12:18 PM

DOT Code/Fire Haz. Class	Common Name	Unit	Quantities: Max. Daily	Quantities: Largest Cont.	Quantities: Avg. Daily	Annual Waste Amount	Federal Hazard Categories	Hazardous Components (For mixture only): Component Name	% Wt	EHS	CAS No.
	WASTE CYANIDE LAB REAGENT	**Gallons**	**30**	**30**	20	5	- Acute Health - Chronic health	POTASSIUM CYANIDE (0.01%)	0 %		151-50-8
	CAS No	State	Storage Container		Pressue	Waste Code					
		Liquid	Plastic/Non-metalic Drum		Ambient	331					
	Map: 1 Grid: C3	Type			Temperature						
		Waste	Days on Site: 365		Ambient						
	WASTE FLUORESCENT TUBES	**Pounds**	**20**	**40**	13	0	- Acute Health	WASTE FLUORESCENT TUBES	100 %		
	CAS No	State	Storage Container		Pressue	Waste Code					
		Solid	Box		Ambient	181					
	Map: 1 Grid: C3	Type			Temperature						
		Waste	Days on Site: 365		Ambient						

Hazardous Wastes Inventory Matrix Report

CERS Business/Org. **PG&E**
Facility Name **PG&E: Topock Groundwater Extraction Site**
I 40 & Park Moabi Road, Needles 92363

Chemical Location **WATER TREATMENT AREA / HWAA/HWSA**

CERS ID **10148425**
Facility ID **FA0009150**
Status **Submitted** on 1/31/2014 12:18 PM

DOT Code/Fire Haz. Class	Common Name	Unit	Quantities: Max. Daily	Quantities: Largest Cont.	Quantities: Avg. Daily	Annual Waste Amount	Federal Hazard Categories	Hazardous Components (For mixture only): Component Name	% Wt	EHS	CAS No.
	WASTE ACTIVATED CARBON WITH BENZENE CAS No Map: 1 Grid: B3-B4	**Pounds** State: Solid Type: Waste	**500** Storage Container: Steel Drum Days on Site: 365	**500**	330 Pressue: Ambient Temperature: Ambient	140 Waste Code: 181	- Acute Health - Chronic health	ALUMINUM OXIDE	98 %		
	WASTE EMPTY AEROSOLS CANS L/C FLAMMABLE LIQUID CAS No Map: 1 Grid: B3-B4	**Pounds** State: Solid Type: Waste	**500** Storage Container: Steel Drum Days on Site: 365	**500**	330 Pressue: Ambient Temperature: Ambient	40 Waste Code: 181	- Fire	ACETONE TOLUENE XYLENE	1 % 1 % 1 %		67-64-1 108-88-3 1330-20-7
	WASTE MIXED OILS CAS No Map: 1 Grid: B3-B4	**Gallons** State: Liquid Type: Waste	**55** Storage Container: Steel Drum Days on Site: 365	**55**	37 Pressue: Ambient Temperature: Ambient	16 Waste Code: 221	- Acute Health	LUBE OIL HYDRAULIC OIL Kerosene MINERAL OIL MOTOR OIL	90 % 90 % 5 % 90 % 90 %		 008008-20-6
	WASTE SOIL/DEBRIS CONTAMINATED WITH ORGANICS CAS No Map: 1 Grid: B3-B4	**Pounds** State: Solid Type: Waste	**500** Storage Container: Steel Drum Days on Site: 365	**500**	330 Pressue: Ambient Temperature: Ambient	240 Waste Code: 352	- Acute Health	BUTYL DETERGENT OIL, DIESEL, TPH	10 % 20 %		

Hazardous Wastes Inventory Matrix Report

CERS Business/Org. **PG&E**
Facility Name **PG&E: Topock Groundwater Extraction Site**
I 40 & Park Moabi Road, Needles 92363

Chemical Location **WATER TREATMENT AREA / PHASE SEPARATOR CONTAINER**

CERS ID **10148425**
Facility ID **FA0009150**
Status **Submitted** on 1/31/2014 12:18 PM

DOT Code/Fire Haz. Class	Common Name	Unit	Quantities: Max. Daily	Quantities: Largest Cont.	Quantities: Avg. Daily	Annual Waste Amount	Federal Hazard Categories	Hazardous Components (For mixture only): Component Name	% Wt	EHS	CAS No.
	WASTE CLARIFIER SLUDGE W/CHROMIUM	**Pounds**	**36,000**	**18,000**	24,000	37,841		CHROMIUM			7440-47-3
	CAS No	State: Solid	Storage Container: Other		Pressue: Ambient	Waste Code: 491					
	Map: 1 Grid: C6-7	Type: Waste	Days on Site: 365		Temperature: Ambient						

Attachment 4

Agreements with Emergency Response Agencies

The following firm can be utilized and will be called, if needed, to assist with cleanup and disposal operations.

SPILL CLEANUP, RESPONSE, AND TRANSPORTATION		ARRANGEMENTS
Name Address City Telephone	PSC Industrial Outsourcing Inc. 1802 Shelton Drive Hollister, CA 95023 (800) 321-1030	Oil Spill Response and Hazardous Waste and PCBs - Cleanup and Transportation

TITLE 22 (CCR) HAZARDOUS WASTE CONTINGENCY PLAN
AGREEMENT BETWEEN PG&E AND
LOCAL EMERGENCY RESPONSE ORGANIZATION

PG&E and Colorado River Medical Center hereby agree to the following arrangements with regards to Pacific Gas and Electric Company's (PG&E's) Topock Groundwater Extraction Site located near Needles, California.

1. PG&E will familiarize the above-named local organization with the layout of the facility, the properties and associated hazards of the hazardous waste handled at the facility, places where facility personnel would normally be working, entrances to and roads inside the facility and possible evacuation routes.
2. The above-named organization will provide customary and appropriate emergency assistance to the facility in the event of a hazardous waste emergency which requires the service of the Colorado River Medical Center.

1-30-06	2/10/04
Signature **Date**	**Signature** **Date**
Curt Russell	JOHN PRUITT
Name	**Name**
Environmental Consultant	CEO
Title	**Title**
Pacific Gas & Electric Company	Colorado River Medical Center
Organization	**Organization**
Topock Groundwater Extraction Site Interstate 40 & Park Moabi Road Needles, CA 92363	1401 Bailey Avenue Needles, CA 92363

TITLE 22 (CCR) HAZARDOUS WASTE CONTINGENCY PLAN
AGREEMENT BETWEEN PG&E AND
LOCAL EMERGENCY RESPONSE ORGANIZATION

PG&E and San Bernardino County Fire Dept., Needles #31 hereby agree to the following arrangements with regards to Pacific Gas and Electric Company's (PG&E's) Topock Groundwater Extraction Site located near Needles, California.

1. PG&E will familiarize the above-named local organization with the layout of the facility, the properties and associated hazards of the hazardous waste handled at the facility, places where facility personnel would normally be working, entrances to and roads inside the facility and possible evacuation routes.
2. The above-named organization will provide customary and appropriate emergency assistance to the facility in the event of a hazardous waste emergency which requires the service of the San Bernardino County Fire Dept., Needles #31.

1-30-06	2/28/06
Signature **Date**	**Signature** **Date**
Curt Russell	Robert R. Lyons
Name	**Name**
Environmental Consultant	Battalion Chief
Title	**Title**
Pacific Gas & Electric Company	San Bernardino Co. Fire Dept., #31
Organization	**Organization**
Topock Groundwater Extraction Site Interstate 40 & Park Moabi Road Needles, CA 92363	633 Front Street Needles, CA 92363

TITLE 22 (CCR) HAZARDOUS WASTE CONTINGENCY PLAN AGREEMENT BETWEEN PG&E AND LOCAL EMERGENCY RESPONSE ORGANIZATION

PG&E and San Bernardino County Sheriff's Department, Colorado River Station hereby agree to the following arrangements with regards to Pacific Gas and Electric Company's (PG&E's) Topock Groundwater Extraction Site located near Needles, California.

1. PG&E will familiarize the above-named local organization with the layout of the facility, the properties and associated hazards of the hazardous waste handled at the facility, places where facility personnel would normally be working, entrances to and roads inside the facility and possible evacuation routes.
2. The above-named organization will provide customary and appropriate emergency assistance to the facility in the event of a hazardous waste emergency which requires the service of the San Bernardino County Sheriff's Department, Colorado River Station.

[signature] 1-30-06	[signature] 8 FEB 06
Signature **Date**	**Signature** **Date**
Curt Russell	~~SCS. Pitts~~ ROBERT WELLOTT, CAPTAIN
Name	**Name**
Environmental Consultant	
Title	**Title**
Pacific Gas & Electric Company	San Bernardino County Sheriff's Department, Colorado River Station
Organization	**Organization**
Topock Groundwater Extraction Site Interstate 40 & Park Moabi Road Needles, CA 92363	1111 Bailey Avenue Needles, CA 92363

Attachment 5
Emergency Response Procedure: Hazard Mitigation/Prevention/Abatement [19 CCR §2731(e)]

Briefly describe your business standard operating procedures in the event of a release or threatened release of hazardous materials:

1. Evaluate hazards.
2. If safe, take care of injured.
3. Call 911 or specific emergency responder if the situation appears to be beyond your ability to resolve immediately.
4. Don't attempt any action that is beyond the scope of your knowledge, training or experience.
5. If necessary to evacuate the facility, follow evacuation routes and procedures.
6. Notify internal emergency coordinator (site emergency contact) and/or the assigned Environmental Field Specialist.
7. If necessary, arrange for hazardous materials/emergency response contractor to respond and/or clean up spill.
8. Assure that appropriate agency notifications are made (after situation is stabilized and it is safe to do so).

1. **PREVENTION** (prevent the hazard) – Describe what is done to prevent a release or threatened release of hazardous materials (e.g. discussion of safety and storage procedures).

   a. Complete required routine inspections of facility equipment, piping, tanks, shut-off valves and emergency response equipment.
   b. Perform required maintenance of systems identified in routine inspections.
   c. Provide secondary containment where required to prevent leakage or spills.
   d. Maintain secondary containment (make sure water is removed, leaks and cracks are repaired).
   e. Check packaging and lids of hazardous materials containers during routine inspections.
   f. Promptly clean up small spills and properly dispose of clean up materials.
   g. Segregate incompatible materials.
   h. Keep hazardous materials stored in appropriate locations (designated lockers, sheds, etc.).
   i. Assure that security fencing, locks and gates are in good repair and being used properly.
   j. Keep evacuation map and emergency response procedures prominently posted.

2. **MITIGATION** (reduce the hazard) – What is your immediate response to a leak, spill, fire, explosion, or airborne release (e.g. absorbent on spills, use of fire extinguisher, closing of valves, etc.).

   a. Evaluate hazards.
   b. If safe, take care of injured.
   c. Call 911 or specific emergency responder if the situation appears to be beyond your ability to resolve immediately.
   d. If safe, attempt to put out a fire using appropriate fire extinguisher.
   e. If safe, take steps to prevent leak from worsening or moving towards a waterway or storm drain (close valves, place sand bags or containment booms).
   f. If necessary to evacuate the facility, follow evacuation routes and procedures.
   g. If there is potential for the leak or spill to affect people or the environment near the facility, work with incident commander to notify/evacuate people/animals from the area as appropriate.
   h. Notify internal emergency coordinator (site emergency contact) and/or the assigned Environmental Field Specialist.
   i. If necessary, arrange for hazardous materials/emergency response contractor to respond and/or clean up spill.
   j. Assure that appropriate agency notifications are made (after situation is stabilized and it is safe to do so).

3. **ABATEMENT** (remove the hazard) – Describe what you would do to remove any released material (e.g. clean up company, absorb spill and containerize).

   a. Small leaks and spills should be cleaned up using appropriate absorbent material.
   b. Remove/repair any leaking pipes, tanks, containment or packaging.
   c. Contaminated materials from clean up efforts must be disposed of properly (containerized as hazardous waste and/or removed by qualified hazardous waste contractor).
   d. For large spills (over one gallon, could enter the storm drain or contaminate a wetland, stream, lake or other water body), immediately call a qualified hazardous materials spill response contractor (work with EFS to access PG&E's list of qualified hazardous materials spill response contractors).

Attachment 6
Emergency Response Procedure: Earthquake Vulnerability [19 CCR §2731(c)]

Identify areas of the facility where releases could occur or would require immediate inspection or isolation because of the vulnerability to earthquake related ground motion. *(check all which apply)*:

☐ NOT APPLICABLE

☒ Hazardous Waste/ Hazardous Materials Storage Areas	☐ Production Floor	☐ Process Lines
☐ Bench/ Lab	☐ Waste Treatment	☒ Oil-Filled Transformers
☐ Other (describe):		

Identify mechanical systems where releases could occur or would require immediate inspection or isolation because of the vulnerability to earthquake related ground motion. *(check all which apply)*:

☐ NOT APPLICABLE

☒ Utilities	☐ Sprinkler Systems	☒ Cabinets	☐ Shelves
☐ Racks	☒ Pressure Vessels	☒ Gas Cylinders	☒ Tanks
☐ Process Piping	☐ Shutoff Valves	☒ Oil-Filled Transformers	
☐ Other (describe):			

Attachment 7

Hazardous Waste Generators – Miscellaneous Forms

☒ Not Applicable

ATTACHMENT 8
HAZARDOUS MATERIALS BUSINESS PLAN (HMBP) INSPECTION CHECKLIST

INSTRUCTIONS: Compare the on-site HMBP to actual conditions (note if changes are at agency request). **Notify** local EFS of any changes. **Submit** the (1) completed checklist, (2) inventory, and (3) marked-up facility layout map via one of the following:	
Scan and e-mail *(preferred)*: HazMat@pge.com **Company or U.S. Mail:** PG&E Environmental Operations Hazardous Materials Business Plan Program 3401 Crow Canyon Road San Ramon, CA 94583	Mail originals; maintain file copy for 60 days. Put the site name in the subject line. Send (cc) to your supervisor and local EFS.

Business Owner/ID Page			
	Provide the following information: ☐ Monthly Inspection ☐ Annual Inspection	Facility Name: _____ County: _____ Date of Inspection: _____ HMBP Dated: _____ Facility phone: _____ EPA ID: _____ Inspected by: _____ Contact Phone: _____ Approved by: _____(supervisor)	
	Primary emergency contact information:	**Secondary** emergency contact information:	**Environmental** emergency contact information:
	☐ No changes ☐ Changes noted below Name: _____ Title: _____ Office phone: _____ Cell/Pager: _____ 24-hour phone: _____ Office location: _____ _____	☐ No changes ☐ Changes noted below Name: _____ Title: _____ Office phone: _____ Cell/Pager: _____ 24-hour phone: _____ Office location: _____ _____	☐ No changes ☐ Changes noted below Name: _____ Title: _____ Office phone: _____ Cell/Pager: _____ 24-hour phone: _____ Office location: _____ _____

Facility Layout Map	Note any changes (clearly mark up copy of map) between actual site conditions and what is shown on the HMBP map. Some important things to include (but are not limited to): • Hazardous waste storage (HWS) areas • Hazardous waste accumulation (HWAA) areas • Shut-offs	☐ No changes Changes to: ☐ fences, gates, locks, card readers, keys, guards, access points ☐ structures ☐ tanks or drums (list contents) ☐ oil-filled equipment ☐ emergency procedures or assembly area ☐ other: _____
Emergency Response/ Contingency Plan	What is the emergency evacuation signal (bell, alarm)? Are communication and/or alarm systems in place and operational? What is the "all clear" signal? Are Post-Incident Contacts and Emergency Resources information current?	_____ ☐ Yes. ☐ No (explain): _____ _____ _____ ☐ Yes. ☐ No (changes noted on Emergency Response/Contingency Plan contacts page)
Emergency Equipment Inventory Table	Update tables with current facility conditions, including, but not limited to the locations of: • first aid kits • spill response kits • fire extinguishers • PPE • Eyewash stations (plumbed or ANSI approved only)	☐ No changes ☐ Changes noted on facility layout map and tables.

HAZARDOUS MATERIAL/WASTE CHANGES

IS THIS SITE A SPECIAL THRESHOLD SITE? ☐ **Yes** ☐ **No**
IF SO, IS THRESHOLD APPLICABLE TO: ☐ **MATERIALS** ☐ **WASTE** ☐ **BOTH**
(REFER TO "SPECIAL THRESHOLDS" TABLE)

VENDOR	**PRODUCT NAME (part/product #)**	**NUMBER OF CONTAINERS**	**MEASURE** (lbs., gallons, cubic feet)	**CONTAINER TYPE** (see below)	**LOCATION** (building, grid)
ARE THERE NEW MATERIALS/WASTE ABOVE THRESHOLD? ☐ **Yes** ☐ **No**					
ARE THERE INCREASED MATERIALS/WASTE ABOVE THRESHOLD? ☐ **Yes** ☐ **No**					
LOCATION CHANGES FOR EXISTING MATERIALS/WASTE					

A – Above ground tank	D – Steel drum	G – Carboy	J – Bag	M – Glass bottle	P – Tank wagon
B – Below ground tank	E – Plastic/non-metal drum	H – Silo	K – Box	N – Plastic bottle	Q – Rail car
C – Tank inside building	F – Can	I – Fiber drum	L – Cylinder	O – Tote bin	R - Other

FACILITY INSPECTION LOG

✓ = Yes/Pass

○ = No/Fail

FACILITY NAME: **LOCATION:**

DATE	PCB'S ≥ 50 PPM PRESENT Y(es) or N(o)	BARRICADES OR FENCES IN PLACE	ADEQUATE AISLE SPACE: INCOMPATIBLES ARE SEPARATED	DRUMS ON PALLETS	STORAGE TIMES HAVE NOT BEEN EXCEEDED	ALL REQUIRED WARNING SIGNS ARE POSTED	ALL EMERGENCY EQUIPMENT IS PRESENT AND IN WORKING ORDER	SECONDARY CONTAINMENT IN WORKING ORDER	ALL CONTAINERS ARE CLOSED	ALL CONTAINERS PROPERLY LABELED: LABELS ARE COMPLETE	ALL CONTAINERS IN GOOD CONDITION	NO SPILLS OR LEAKS	NO HAZARDOUS WASTE OUTSIDE OF STORAGE AREA	NO UNIDENTIFED HAZARDOUS WASTE INSIDE OF STORAGE AREA	* SERVICE CENTER INSPECTION, SPCC	* FUEL ISLAND INSPECTION	COMMENTS/CORRECTIVE ACTION TO BE TAKEN	DATE CORRECTIVE ACTION COMPLETED	SIGNATURE

* See Reverse Side

SERVICE CENTER

(Inspection required as dictated by Part II, Section 3, SPCC Plan)

Hazardous Materials Storage Area:

- Stored Securely
- Proper Labels
- Incompatibles Separate
- No Spills/Leaks
- Compressed Gas/Secured/Capped/Labeled

Oil Filled Electrical Equipment Storage Area:

- Equipment Upright
- Drums Labeled
- No Spills/Leaks
- Stored in Proper Location

Storage Tanks/Tanker Trucks:

- No spills/Leaks
- No Evidence of Corrosion/Cracking
- Overfill Precautions in Place
- Leak Detect System Operational

Emergency Equipment:

- Good condition - Protective Clothing
- Fire Extinguishers
- Cleanup Supplies
- Adequate Supplies Available

San Bernardino County Fire Department • Hazardous Materials Division

620 South "E" Street, San Bernardino, CA 92415-0153 • PHONE (909) 386-8401 FAX (909) 386-8460 www.sbcfire.org

BUSINESS EMERGENCY/CONTINGENCY PLAN COVER SHEET

I. IDENTIFICATION

For Dept Use Only – Log In/Date Stamp

FACILITY ID # F A 0 0 0 6 7 2 3

BUSINESS NAME (Same as FACILITY NAME or DBA) 3

PG&E – Topock Compressor Station

BUSINESS SITE ADDRESS	CITY	ZIPCODE
Interstate 40 and Park Moabi Road 14 Miles East of Needles	Needles	92363

II. SUBMISSION CHECKLIST

(Complete this Section if submitting an entire Business Emergency/Contingency Plan whether new or revised)

Submission Checklist ☒

- ☒ Business Activities Form
- ☒ Business Owner/Operator Identification Form
- ☒ Supplemental Emergency Contact Page
- ☒ Emergency Response Plans and Procedures
- ☐ Hazardous Materials Inventory Summary Form for the facility listing materials (including wastes) by item number
- ☐ One Hazardous Materials Inventory Form for each hazardous material (including wastes) which meet reporting criteria
- ☐ Material Safety Data Sheets attached to the inventory form of each material not listed in Appendix I
- ☒ Facility map (using grid form provided) consisting of all required features including the location of each inventoried item
- ☐ Site map (using grid form provided) consisting of all required features including surrounding facilities and areas.
- ☒ Area map - photocopied city map with location of site indicated
- ☒ Owner/Operator has signed and dated the plan and all required individual pages of the plan
- ☒ Submit the original and 1 copy to the Hazardous Materials Division. One is for distribution to the local fire jurisdiction
- ☒ ***Retain one copy of the business emergency/contingency plan at the facility***.

III. UPDATE/CERTIFICATION

(Complete this Section if submitting a partial update or re-certifying an existing Plan)

Check the appropriate boxes below and sign the certification statement. Submit 2 copies of all update information.

- ☐ Please incorporate the following into my Business Emergency/Contingency Plan
  - ☐ New Business Owner/Operator Identification Form
  - ☐ New Inventory Forms and new Inventory Summary Form (and maps, if affected)
  - ☐ New Supplemental Emergency Contact Page
- ☐ Other: _____

Brief explanation of changes: _____

☐ There have been no changes to the inventory. In place of submitting the annual inventory, I hereby attest to all of the following:

- The information contained in the inventory most recently submitted to the CUPA is complete, accurate and up to date.
- There has been no change in the quantity, storage, or handling of hazardous materials (including waste) reported in the most recently submitted inventory.
- No hazardous materials (including waste) subject to inventory requirements are being handled that are not listed on the most recently submitted inventory.
- This certification is not being made to meet annual inventory submission requirements of EPCRA. (EPCRA requires complete annual submission)

IV. SIGNATURE

(Complete this Section for all submissions)

Certification - Based on my inquiry of those individuals responsible for obtaining the information, I certify under penalty of law that I have personally examined and am familiar with the information submitted on this document and believe the information is true, accurate and complete.

SIGNATURE OF OWNER/OPERATOR	DATE	NAME OF DOCUMENT PREPARER
Michelle Le	02-01-2014	Liza Marfori, Parsons
NAME OF SIGNER (print)	TITLE OF SIGNER (print)	
Michelle Le	Hazardous Material Manager	

Pacific Gas and Electric Company

WE DELIVER ENERGY.SM

HAZARDOUS MATERIALS BUSINESS PLAN

FOR

TOPOCK COMPRESSOR STATION

INTERSTATE 40 AND PARK MOABI ROAD, 14 MILES EAST OF NEEDLES

NEEDLES, CA 92363

FEBRUARY 2014

HAZARDOUS MATERIALS BUSINESS PLAN – FEBRUARY 2014
TOPOCK COMPRESSOR STATION

Table of Contents
for

Topock Compressor Station

Facility Information Business Activities **1**

Business Owner/Operator Identification **2**

CUPA Form Emergency Response/Contingency Plan **3**

Employee Training Plan **6**

Recordkeeping **8**

Attachments

1 Facility Site Plan and Emergency Evacuation Map(s)

2 Hazardous Materials Inventory — Chemical Description

3 Hazardous Waste Inventory Statement

4 Agreements with Emergency Response Agencies

5 Emergency Response Procedure: Hazard Mitigation/Prevention/Abatement [19 CCR §2731(e)]

6 Emergency Response Procedure: Earthquake Vulnerability [19 CCR §2731(c)]

7 Hazardous Waste Generators – Miscellaneous Forms

8 Facilities Inspection Checklists

Business Activities
(Submitted online via CERS)

California Environmental Reporting System (CERS) — Business Activities

Site Identification

PG&E - Topock Compressor Station
I 40 & Park Moabi Road
Needles, CA 92363
County
San Bernardino

CERS ID
10148423
EPA ID Number
CAT080011729

Submittal Status

Submitted on 1/31/2014 by *Megan Silva* of PG&E (San Ramon, CA)

Hazardous Materials

Does your facility have on site (for any purpose) at any one time, hazardous materials at or above 55 gallons for liquids, 500 pounds for solids, or 200 cubic feet for compressed gases (include liquids in ASTs and USTs); or is regulated under more restrictive inventory local reporting requirements (shown below if present); or the applicable Federal threshold quantity for an extremely hazardous substance specified in 40 CFR Part 355, Appendix A or B; or handle radiological materials in quantities for which an emergency plan is required pursuant to 10 CFR Parts 30, 40 or 70?	Yes

Underground Storage Tank(s) (UST)

Does your facility own or operate underground storage tanks?	Yes

Hazardous Waste

Is your facility a Hazardous Waste Generator?	Yes
Does your facility treat hazardous waste on-site?	No
Is your facility's treatment subject to financial assurance requirements (for Permit by Rule and Conditional Authorization)?	No
Does your facility consolidate hazardous waste generated at a remote site?	Yes
Does your facility need to report the closure/removal of a tank that was classified as hazardous waste and cleaned on-site?	No
Does your facility generate in any single calendar month 1,000 kilograms (kg) (2,200 pounds) or more of federal RCRA hazardous waste, or generate in any single calendar month, or accumulate at any time, 1 kg (2.2 pounds) of RCRA acute hazardous waste; or generate or accumulate at any time more than 100 kg (220 pounds) of spill cleanup materials contaminated with RCRA acute hazardous waste.	Yes
Is your facility a Household Hazardous Waste (HHW) Collection site?	No

Excluded and/or Exempted Materials

Does your facility recycle more than 100 kg/month of excluded or exempted recyclable materials (per HSC 25143.2)?	No
Does your facility own or operate ASTs above these thresholds? Store greater than 1,320 gallons of petroleum products (new or used) in aboveground tanks or containers.	Yes
Does your facility have Regulated Substances stored onsite in quantities greater than the threshold quantities established by the California Accidental Release prevention Program (CalARP)?	No

Additional Information

No additional comments provided.

Business Owner/Operator Identification
(Submitted online via CERS)

Facility/Site

PG&E - Topock Compressor Station
I 40 & Park Moabi Road
Needles, CA 92363

CERS ID
10148423

Submittal Status

Submitted on 1/31/2014 by *Megan Silva* of PG&E (San Ramon, CA)

Identification

Pacific Gas & Electric Company

Operator Phone	Business Phone	Business Fax
(760) 326-5541	(760) 326-2615	(760) 326-5542

Beginning Date	Ending Date	
1/31/2014	1/30/2015	
Dun & Bradstreet	**SIC Code**	**Primary NAICS**
006912877	4922	221210

Facility/Site Mailing Address

PG&E - CUPA Permits (REF: Topock CS), PO Box 7640
San Francisco, CA 94120

Primary Emergency Contact

Dan Lytle
Title
Supervisor

Business Phone	24-Hour Phone	Pager Number
(760) 326-5541	(800) 547-5955	

Owner

Pacific Gas & Electric Company
(415) 973-7000
C/o Environmental Services Department, 3401 Crow Canyon Road
San Ramon, CA 94583

Secondary Emergency Contact

Diana Williams
Title
Environmental Operations Supervisor

Business Phone	24-Hour Phone	Pager Number
(925) 270-8209	(800) 874-4043	

Billing Contact

PG&E - CUPA Permits (REF: Topock CS)
(209) 932-2556 HazMat@pge.com
PO Box 7640
San Francisco, CA 94120

Environmental Contact

Valeri Hirst
(760) 253-7847 vjh5@pge.com
35863 Fairview Road
Hinkley, CA 92347

Name of Signer	Signer Title	Document Preparer
Michelle Le	Hazardous Material Manager	Liza Marfori, Parsons

Additional Information

Locally-collected Fields

Some or all of the following fields may be required by your local regulator(s).

Property Owner

Phone

Mailing Address

,

Assessor Parcel Number (APN)

Number of Employees
22

Facility ID
FA0006723

San Bernardino County Fire Department • **Hazardous Materials Division**

620 South "E" Street, San Bernardino, CA 92415-0153 • PHONE (909) 386-8401 FAX (909) 386-8460 www.sbcfire.org

EMERGENCY CONTACTS

BUSINESS NAME (Same as FACILITY NAME or DBA)
PG&E – Topock Compressor Station

A business shall appoint an Emergency Coordinator and Alternate Emergency Coordinator. These persons shall be knowledgeable in all aspects of the business operation. In the event of a release or threatened release of hazardous materials, the Emergency Coordinators shall be responsible for initiating response actions by the business. The Emergency Coordinators shall have full access to the facility, site familiarity and authority to make decisions for the business and to commit business resources. Hazardous waste generators must provide the information required in Title 22 of the California Code of Regulations and must list all emergency coordinators in the order that they will assume responsibility.

ONLY Emergency Contacts listed on this separate page will be held as confidential.

NAME	TITLE
Dan Lytle	Supervisor

OFFICE ADDRESS
145453 National Trails Highway, Needles, CA 92363

OFFICE PHONE	HOME PHONE	OTHER 24 HR PHONE (PAGER/CELL) 127
(760) 326-5541	(760) 408-3680 (Cell)	(800) 547-5955 (24-Hour)

NAME	TITLE
Diana Williams	Environmental Operations Supervisor

OFFICE ADDRESS
6111 Bollinger Canyon Road, San Ramon, CA 94583

OFFICE PHONE	HOME PHONE 126	OTHER 24 HR PHONE (PAGER/CELL) 127
(925) 328-5045	(925) 270-8209 (Cell)	(800) 874-4043 (24-Hour)

NAME	TITLE
Valeri Hirst	Environmental Field Specialist

OFFICE ADDRESS
35863 Fairview Road, Hinkley, CA 92347

OFFICE PHONE	HOME PHONE	OTHER 24 HR PHONE (PAGER/CELL) 127
(760) 253-7847	(760) 577-4642 (Cell)	(800) 874-4043 (24-Hour)

EMERGENCY RESPONSE TEAM (OWN EMPLOYEES OR CONTRACT) –IF APPLICABLE

NAME	24-HOUR PHONE
PSC Industrial Outsourcing Inc.	(800) 321-1030
NAME	24-HOUR PHONE
NAME	24-HOUR PHONE
NAME	24-HOUR PHONE

Date: 02-01-2014

EMERGENCY RESPONSE PLANS & PROCEDURES – AGENCY NOTIFICATION

BUSINESS NAME (Same as FACILITY NAME or DBA) 3

Pacific Gas and Electric Company – Topock Compressor Station

POST BY TELEPHONE

Agency Notification: **If a situation is an emergency, call 911 first.** Additionally, a handler of hazardous materials is required to immediately report any release or threatened release of a hazardous material to San Bernardino County Fire Department, Hazardous Materials Division and the Governor's Office of Emergency Services. Spills exceeding Federal reportable quantities require additional notification to the National Response Center. However, California statute does not limit the requirement to report to any specific quantity. **Also note that calling 911 does not meet the requirement for the handler to report a release and that the local fire department cannot make required notifications on behalf of the handler.** This CUPA requires a written report within 15 days after any reportable release or threatened release. Contact the CUPA for further guidance.

Agency (* Indicates mandatory notification)	**Phone Number**
1. ***Local Emergency Response Agency (if an emergency)	**911**
2. ***San Bernardino County Fire Department Hazardous Materials Division	**(800) 33-TOXIC** or **(909) 386-8425**

*Note: (800) 33-TOXIC does not work nationwide; non-local callers must use (909) 386-8425 to report **any** release or threatened release.*

3. ***** State of California, Governor's Office of Emergency Services (CalOES) **(800) 852-7550** or **(916) 845-8911**
4. National Response Center (**800) 424-8802**
5. Other Agencies *(Cal OSHA, Regional Board, Air Quality, as applicable)*

Agency Name	*Phone Number*
Mojave Desert Air Quality Management District	(760) 245-1661
San Bernardino County Fire Department Needles Fire Station 13, Needles	(909) 387-5974 (760) 326-2833
San Bernardino County Sheriff's Department, Colorado River Station	(760) 326-9200
Colorado River Medical Center	(760) 326-4531

EMERGENCY INFORMATION REQUIRED: BE PREPARED TO PROVIDE THE FOLLOWING INFORMATION

- ♦ Name & phone number of person reporting
- ♦ Name and street address of the business
- ♦ Location of the incident or threatened release
- ♦ Type of incident or threatened release
- ♦ Hazardous materials involved & physical state
- ♦ Hazards to human health and/or environment
- ♦ Actions taken or planned
- ♦ Contractor or cleanup company name
- ♦ Estimate of the quantity released
- ♦ Media (soil, water, air) into which release occurred
- ♦ Precautions to take (if known)
- ♦ Time and duration of the release
- ♦ Is the chemical an extremely hazardous substance?
- ♦ Extent of injuries, if any
- ♦ Is any assistance required?

Release reporting citations (California Health and Safety Code):

§ 25501. Definitions:

(r) "Release" means any spilling, leaking, pumping, pouring, emitting, emptying, discharging, injecting, escaping, leaching, dumping, or disposing into the environment, unless permitted or authorized by a regulatory agency.

(u) "Threatened release," means a condition creating a substantial probability of harm, when the probability and potential extent of harm make it reasonably necessary to take immediate action to prevent, reduce, or mitigate damages to persons, property, or the environment.

§ 25507(a) … the handler or any employee, authorized representative, agent, or designee of a handler shall, upon discovery, immediately report any release or threatened release of a hazardous material to the administering agency, and to the office, in accordance with the regulations adopted pursuant to Section 25503. Each handler and any employee, authorized representative, agent, or designee of a handler shall provide all state, city, or county fire or public health or safety personnel and emergency rescue personnel with access to the handler's facilities.

Date: 02-01-2014

San Bernardino County Fire Department • Hazardous Materials Division

620 South "E" Street, San Bernardino, CA 92415-0153 • PHONE (909) 386-8401 FAX (909) 386-8460 www.sbcfire.org

EMERGENCY RESPONSE PLANS AND PROCEDURES

BUSINESS NAME (Same as FACILITY NAME or DBA)

Pacific Gas and Electric Company – Topock Compressor Station

State Law requires your business to complete all sections of the Emergency Response Procedure listed below: For each of the following, **briefly** describe your business's standard operating procedures relating to the release or threatened release of hazardous materials located at your facility. You may attach additional pages if necessary, but do not include copies of facility manuals unless requested to do so by this Department. You may reference manuals that are used by your facility for these procedures, but you must still give a brief description here.

EVACUATION/NOTIFICATION: Indicate location(s) where employees, customers, visitors or others on site are to evacuate in an emergency. Describe how your business will immediately notify people and evacuate the facility in the event of a release or threatened release of hazardous materials. Include the route and meeting place.

Evacuation of the facility will occur as a response to an incident with known or unknown hazards that could pose a threat to the health and/or safety of facility personnel. All facility personnel have been trained in the evacuation routes for their work stations and the other areas of the facility. An assembly point is designated outside the main entrance to the facility. The decision to evacuate is the responsibility of the Facility Emergency Coordinator or the Shift Supervisor. He/she will determine the extent of evacuation. Evacuation signals are provided by either audible alarms or given verbally.

PREVENTION/MITIGATION/ABATEMENT: Describe what policies and procedures your business will follow to prevent, reduce and/or remove the hazard to persons, property or the environment caused by a release or threatened release of hazardous materials and/or hazardous wastes. (√ Check those items that apply and write additional information in the space provided).

☒ Reduction of containers on site if not used or needed

☒ Containers are properly labeled and closed when not in use

☒ Compressed gas cylinders are properly secured

☐ Use of monitoring system Type: _____

☒ Other:

Areas containing significant quantities of hazardous materials and identified storage vessels are periodically inspected, as appropriate, for visible leaks, accumulations in secondary containment; compatibility or materials; proper labeling and signage; safety, personal protective and fire fighting equipment, spill response equipment and supplies; operability of emergency eyewash and shower stations.

PG&E has detailed spill response and mitigation procedures which are an integral part of the hazardous materials business plan. The Primary Facility Emergency Coordinator is the individual who is responsible for coordinating all emergency response measures at the facility. The primary Emergency Coordinator is familiar with all aspects of the facility's contingency plan, all operations and activities at the facility, the characteristics of materials and wastes handled, the location(s) of all applicable emergency response records for the facility, and the facility layout. This person has the authority to commit the resources needed to carry out the contingency plan and the responsibility to respond to emergencies. This information can be found in Attachment 5.

Date: 02-01-2014

EMERGENCY RESPONSE PLANS AND PROCEDURES

BUSINESS NAME (Same as FACILITY NAME or DBA)

Pacific Gas and Electric Company – Topock Compressor Station

FACILITY TRAINING PLAN: Describe employee and operator training including local emergency response coordination, use of facility emergency equipment, and provisions for initial and refresher training. In addition, describe training for hazardous materials/waste handling as required by OSHA. (√ Check those items that apply and write additional information in the space provided)

- ☒ New employee training
- ☒ Annual training & periodic refresher courses
- ☒ Familiarization with the Emergency Response Plans and Procedures of this Business Plan
- ☒ Spill control equipment
- ☐ Monitoring system
- ☒ Personal Protective Equipment
- ☒ On the job training (Described below)
- ☒ Other:

PG&E has complimentary training programs that address the proper handling of hazardous materials and wastes at Company facilities. The training program meets the employee training requirements at both federal and state regulations as they apply to hazardous waste contingency plans and emergency response plans. In accordance with Federal and State regulations (40 CFR, Titles 19 and 27 of the California Code of Regulations, and California Health and Safety Code), employees in each department or facility receive "Right to Know" or "Hazard Communication Training on specific topics such as safe methods for storage and handling of hazardous materials, proper fitting and use of personal protective equipment, and knowledge of the specific hazards of the chemicals to which the employees are exposed. "Right to Know" instruction is given by the supervisor or other qualified person. The supervisor documents the training by maintaining a signed training roster.

United States Department of Transportation (U.S.DOT) Hazardous Material Transportation training as required in 49CFR 17.2702, 172.704 and 177.816 is provided to any employee who packages, labels, marks, loads or offers a hazardous material for transport, or who transports a hazardous material. All employees are required to be trained within six months of starting a job assignment that involves hazardous waste management duties.

Employees receive appropriate on-the-job training which includes procedures for spill prevention and spill cleanup and the handling of hazardous materials and hazardous wastes. Spill prevention procedures and cleanup procedures are documented in PG&E California Gas Transmission (CGT) Environmental Compliance Manual Volume #2.

EMERGENCY PROCEDURES: Describe duties of the Emergency Coordinator and how implementation of Facility Emergency Response will be accomplished. (e.g. Notification, evacuation, emergency coordination) (√ Check those items that apply and write additional information in the space provided)

Emergency Coordinator will:

- ☒ Identify potential hazards and determine whether a release has occurred
- ☒ Activate local emergency systems (e.g. manual shutoff devices) and take appropriate immediate actions based on level of training and the ability to act safely
- ☒ Coordinate the notification and evacuation of employees, customers, and other visitors from the facility
- ☒ Make required agency notifications and request needed assistance
- ☒ Assist responding agencies by providing access to the facility and information about the facility
- ☒ Other:

The Facility Emergency Coordinator is the individual who is responsible for coordinating all emergency response measures at the facility. The Facility Emergency Coordinator is familiar with all aspects of the facility's contingency plan, all operations and activities at the facility, the characteristics of materials and wastes handled, the location(s) of all applicable emergency response records for the facility, and the facility layout. The person has the authority to commit to resources needed to carry out the contingency plan and the responsibility to respond to emergencies.

Date: 02-01-2014

EMERGENCY RESPONSE PLANS AND PROCEDURES

BUSINESS NAME (Same as FACILITY NAME or DBA)
3
Pacific Gas and Electric Company – Topock Compressor Station

FACILITY EMERGENCY EQUIPMENT: List facility emergency equipment on site (e.g. fire extinguisher, fire alarms, spill control equipment, SCBA, first aid kits, etc.). Include test/maintenance plan. (√ Check those items that apply and write additional information in the space provided)

	Equipment	Quantity/Type	Maintenance Schedule/Frequency
☒	Fire extinguisher(s)	**See Emergency Equipment Table**	
☒	First aid kit(s)	**See Emergency Equipment Table**	
☐	Fire alarm(s)		
☒	Spill control equipment	**See Emergency Equipment Table**	
☐	Monitoring system		
☒	Personal Protective Equipment	**See Emergency Equipment Table**	
☐			
☐			
☐			
☐			

FACILITY EARTHQUAKE RESPONSE: Identify areas of the facility as well as mechanical or other systems that require immediate inspection due to their vulnerability to earthquake related ground motion. (e.g. Hazardous materials or waste storage locations, vessels, piping, pipe and tank supports, valves, gauges, etc.) (√ Check those items that apply and write additional information in the space provided)

- ☒ Chemical Storage Locations – Product and Waste
- ☐ Process vessels
- ☒ Aboveground storage tanks
- ☒ Emergency shut-off systems
- ☒ Piping and pipe supports
- ☐ Utility connections
- ☒ Other

Following a moderate to severe earthquake, the natural gas pipelines leading to and from the facility, and other major natural gas containing equipment or piping are inspected for damage and leaks. Following the natural gas conveyance equipment inspections, aboveground storage tanks and hazardous materials storage areas are inspected for damage**.** This information can be found in Attachment 6.

ARRANGEMENTS/AGREEMENTS: Describe any arrangements or agreements that you have with private emergency response teams, waste haulers, disposal companies, recyclers, local hospitals, police and/or fire. If you have no arrangements or agreements, state that fact in the space provided. (√ Check those items that apply and write additional information in the space provided)

- ☒ Hazardous waste hauler **PSC Industrial Outsourcing Inc., (800) 321-1030**
- ☐ Emergency response team
- ☒ Local hospitals **Colorado River Medical Center, (760) 326-4531**
- ☒ Other: **See Attachment 4**
- ☐ No arrangements or agreements at this time

Date: 02-01-2014

Emergency Equipment

22 CCR §66265.52(e) [as referenced by 22 CCR §66262.34(a)(4)] requires that emergency equipment at the facility be listed. Completion of the following Emergency Equipment Inventory Table meets this requirement.

Emergency Equipment Inventory Table			
1. Equipment Category	**2. Equipment Type**	**3. Locations***	**4. Description****
Personal Protective Equipment, Safety Equipment, and First Aid Equipment	☒ Cartridge Respirators	See Facility Layout Map	Personal Protection
	☐ Chemical Monitoring Equipment *(describe)*		
	☐ Chemical Protective Aprons/Coats		
	☒ Chemical Protective Boots	See Facility Layout Map	Personal Protection
	☒ Chemical Protective Gloves	See Facility Layout Map	Personal Protection
	☒ Chemical Protective Suits: *Coveralls*	See Facility Layout Map	Personal Protection
	☒ Face Shields	See Facility Layout Map	Personal Protection
	☒ First Aid Kits/Stations *(describe)*	See Facility Layout Map	Personal Protection
	☒ Hard Hats	Vehicles	Company Issued
	☒ Plumbed Eye Wash Stations	See Facility Layout Map	Personal Protection
	☐ Portable Eye Wash Kits *(i.e., bottle type)*		
	☒ Respirator Cartridges *(describe)*	See Facility Layout Map	Personal Protection
	☒ Safety Glasses/Splash Goggles	See Facility Layout Map	Personal Protection
	☒ Safety Showers	See Facility Layout Map	Personal Protection
	☐ Self-Contained Breathing Apparatuses (SCBA)		
	☐ Other *(describe)*		
Fire Extinguishing Systems	☐ Automatic Fire Sprinkler Systems		
	☒ Fire Alarm Boxes/Stations	See Facility Layout Map	
	☐ Fire Extinguisher Systems *(describe)*		
	☒ Fire Extinguishers *(describe)*	See Facility Layout Map	
	☒ Other *(Hose Station)*	See Facility Layout Map	
Spill Control Equipment and Decontamination Equipment	☒ Absorbents *(describe)*	See Facility Layout Map	Spill Cleanup
	☒ Berms/Dikes *(Curb)*	See Facility Layout Map	Spill Containment
	☐ Decontamination Equipment *(describe)*		
	☐ Emergency Tanks *(describe)*		
	☐ Exhaust Hoods		
	☐ Gas Cylinder Leak Repair Kits *(describe)*		
	☒ Neutralizers *(for Odorant)*	See Facility Layout Map	Spill Cleanup
	☒ Overpack Drums	See Facility Layout Map	5, 55 and 95-gallon drums
	☐ Sumps *(describe)*		
	☐ Other *(describe)*		
Communications and Alarm Systems	☐ Chemical Alarms *(describe)*		
	☐ Intercoms/ PA Systems		
	☒ Portable Radios	Vehicles	Communication
	☒ Telephones	Throughout Site	Communication
	☐ Tank Leak Detection Systems		
	☒ Other: *Cell phones*	Vehicles	Communication
Additional Equipment *(Use Additional Pages if Needed.)*	☐		
	☐		
	☐		
	☐		
	☐		

* See Facility Layout Map for equipment locations.

** Describe the equipment and its capabilities. If applicable, specify any testing/maintenance procedures/intervals. Attach additional pages, numbered appropriately, if needed.

Record Keeping

Emergency Response/Contingency Plan (Hazardous Materials Business Plan Module)

All facilities that handle hazardous materials must maintain records associated with their management. A summary of your record keeping procedures is a required module of the Unidocs Hazardous Materials Business Plan (HMBP). A blank summary has been provided below for you to complete and submit if you do not already have such a document. **If you already have a brief written description of your hazardous materials record keeping systems that addresses all subjects covered below, you are not required to complete this page, but you must include a copy of your existing document as part of your HMBP.**

Check all boxes that apply. The following records are maintained at the facility.
Note: Items marked with an asterisk (*) are required.

☒	Current employees' training records *(to be retained until closure of the facility)* *.
☒	Former employees' training records *(to be retained at least three years after termination of employment)* *
☒	Training Program(s) *(i.e., written description of introductory and continuing training)* *
☒	Current copy of this Emergency Response/Contingency Plan *
☒	Record of recordable/reportable hazardous material/waste releases *
☒	Record of hazardous material/waste storage area inspections *
☒	Record of hazardous waste tank daily inspections *
☐	Description and documentation of facility emergency response drills

Note: The above list of records does not necessarily identify every type of record required to be maintained by the facility.

Note: The following section applies where local agencies require facility owners/operators to perform and document routine facility self-inspections,

A copy of the Inspection Check Sheet(s) or Log(s) used in conjunction with required routine self-inspections of your facility must be submitted with your HMBP. *[Exception: Unidocs provides a Hazardous Materials/Waste Storage Area Inspection Form that you may use if you do not already have your own form. If you use the Unidocs form (available at* **www.unidocs.org***), you do not need to attach a copy.]*

Check the appropriate box:

☐	We will use the Unidocs "Hazardous Materials/Waste Storage Area Inspection Form" to document inspections.
☒	We will use our own documents to record inspections. ***(A blank copy of each document used must be attached to this HMBP.)***

Attachment 1

Facility Site Plan and Emergency Evacuation Map(s)

(Submitted online via CERS)

61-4533 (7-78)

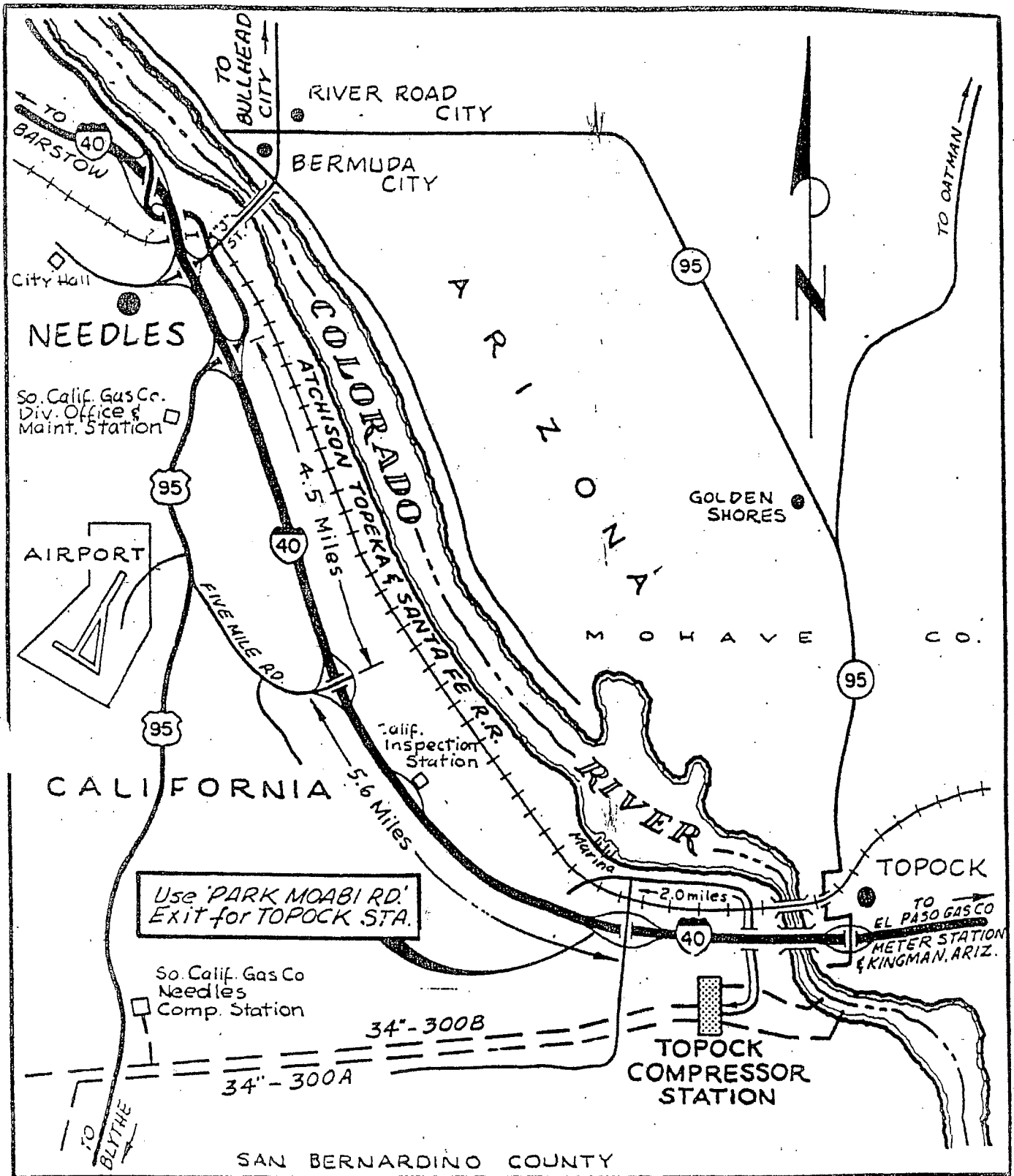

APPROVED BY						
			REDRAWN & BROUGHT TO DATE	RLP	PT	
REV	DATE	DESCRIPTION		BY	CHKD	APVD

DEPT. P & O.
SUPV. M. CALLEJAS
DWN. R. POLETE
CHKD. P. TUNG
M. Callejas
DATE
SCALE NONE

AREA MAP
TOPOCK COMPRESSOR STATION

PACIFIC GAS AND ELECTRIC COMPANY
SAN FRANCISCO CAL

SUPSDS NGO-2 Sh 11
SUPSD. BY
SHEET NO. SHEETS
DRAWING NUMBER 082506
REV. 10

88827

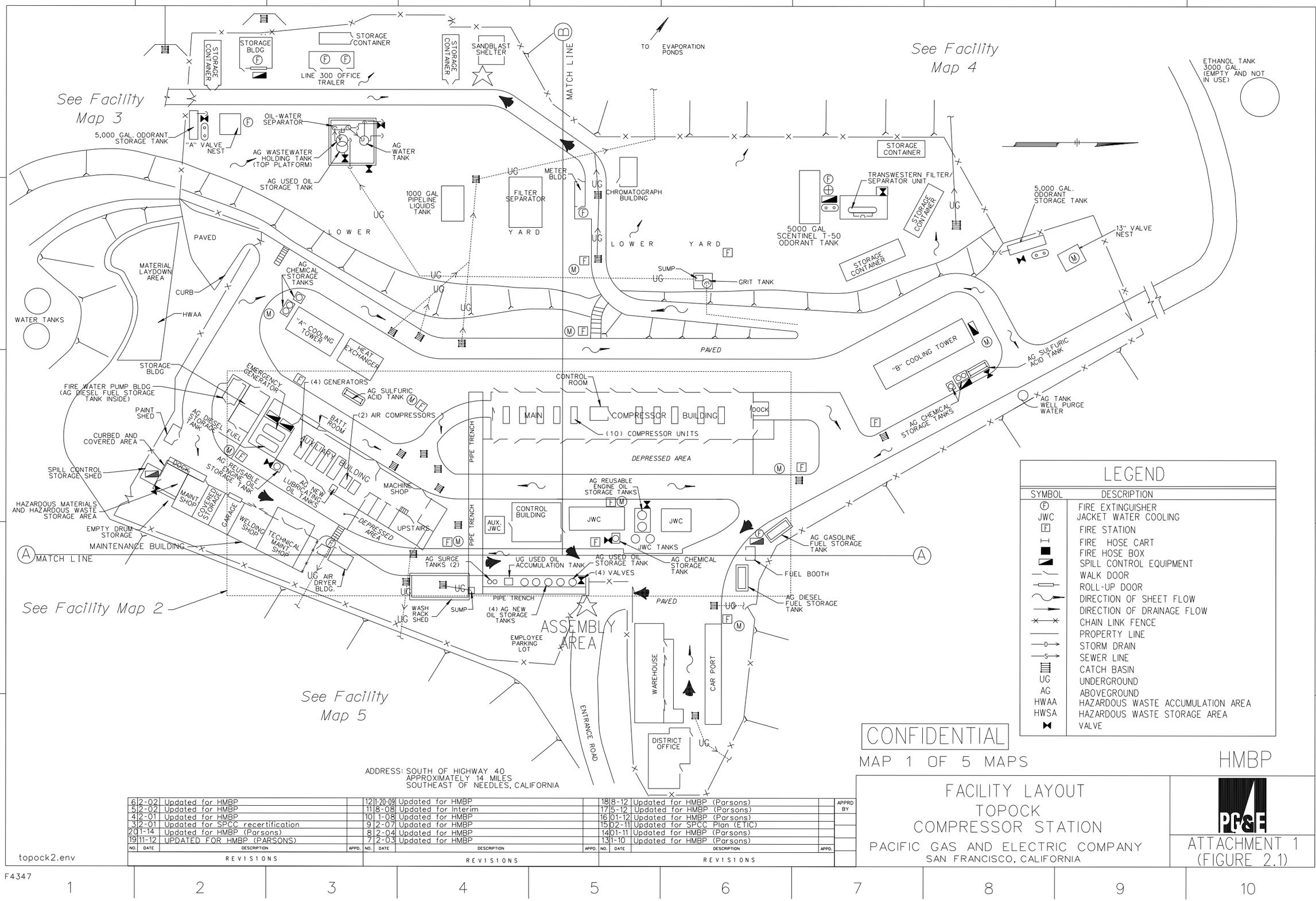

LEGEND

SYMBOL	DESCRIPTION
(F)	FIRE EXTINGUISHER
JWC	JACKET WATER COOLING
[F]	FIRE STATION
	FIRE HOSE CART
	FIRE HOSE BOX
	SPILL CONTROL EQUIPMENT
	WALK DOOR
	ROLL-UP DOOR
	DIRECTION OF SHEET FLOW
	DIRECTION OF DRAINAGE FLOW
	CHAIN LINK FENCE
	PROPERTY LINE
D	STORM DRAIN
S	SEWER LINE
	CATCH BASIN
UG	UNDERGROUND
AG	ABOVEGROUND
HWAA	HAZARDOUS WASTE ACCUMULATION AREA
HWSA	HAZARDOUS WASTE STORAGE AREA
	VALVE

ADDRESS: SOUTH OF HIGHWAY 40
APPROXIMATELY 14 MILES
SOUTHEAST OF NEEDLES, CALIFORNIA

CONFIDENTIAL

MAP 1 OF 5 MAPS

HMBP

NO.	DATE	DESCRIPTION	APPD.
6	2-02	Updated for HMBP	
5	2-02	Updated for HMBP	
4	2-01	Updated for HMBP	
3	2-01	Updated for SPCC recertification	
20	1-14	Updated for HMBP (Parsons)	
19	11-12	UPDATED FOR HMBP (PARSONS)	
12	1-20-09	Updated for HMBP	
11	8-08	Updated for Interim	
10	1-08	Updated for HMBP	
9	2-07	Updated for HMBP	
8	2-04	Updated for HMBP	
7	2-03	Updated for HMBP	
18	8-12	Updated for HMBP (Parsons)	
17	5-12	Updated for HMBP (Parsons)	
16	01-12	Updated for HMBP (Parsons)	
15	02-11	Updated for SPCC Plan (ETIC)	
14	01-11	Updated for HMBP (Parsons)	
13	1-10	Updated for HMBP (Parsons)	

REVISIONS — APPRD BY

FACILITY LAYOUT
TOPOCK COMPRESSOR STATION

PACIFIC GAS AND ELECTRIC COMPANY
SAN FRANCISCO, CALIFORNIA

PG&E

ATTACHMENT 1
(FIGURE 2.1)

topock2.env

F4347

FACILITY DETAIL MAP 2	SAN BERNARDINO COUNTY	BUSINESS NAME: Pacific Gas & Electric Co. TOPOCK COMPRESSOR STATION	MAP NOT TO SCALE

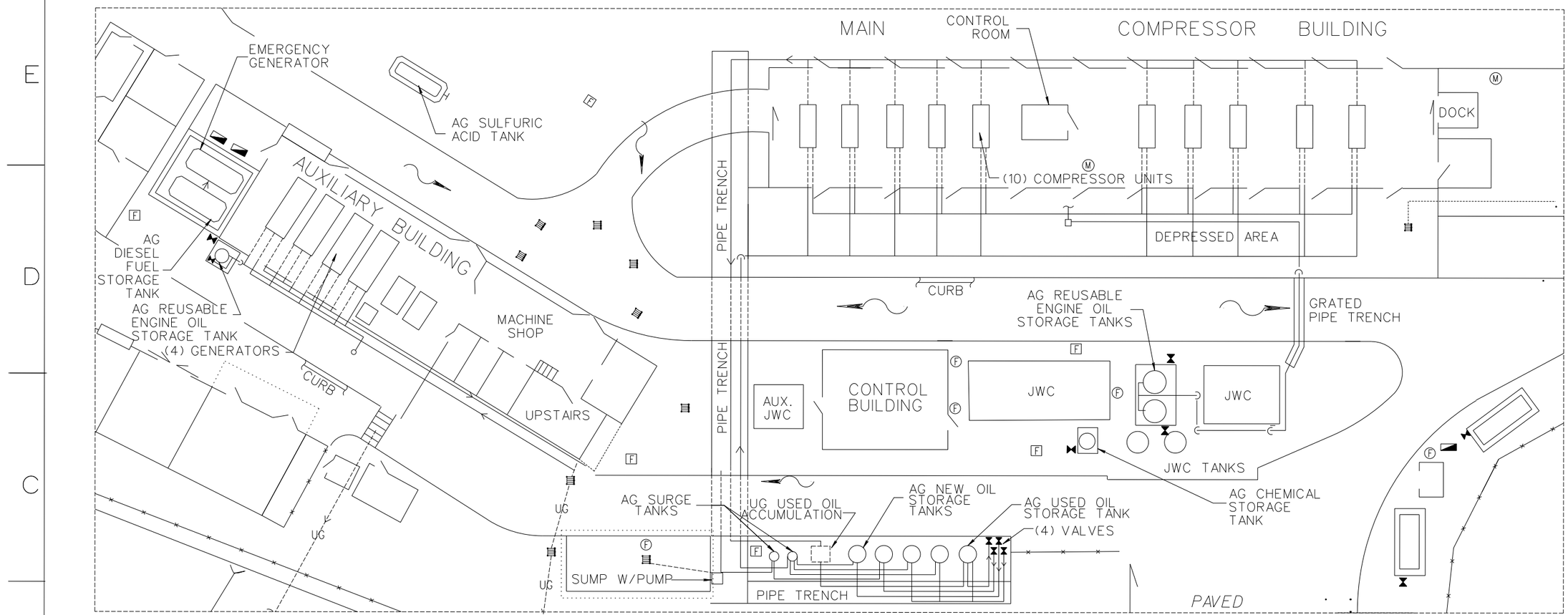

MAP 2 OF 5 MAPS

LEGEND

SYMBOL	DESCRIPTION
Ⓕ	FIRE EXTINGUISHER
JWC	JACKET WATER COOLING
[F]	FIRE STATION
	FIRE HOSE CART
	FIRE HOSE BOX
	SPILL CONTROL EQUIPMENT
	WALK DOOR
	ROLL-UP DOOR
	DIRECTION OF SHEET FLOW
	DIRECTION OF DRAINAGE FLOW
	CHAIN LINK FENCE
	PROPERTY LINE
D	STORM DRAIN
S	SEWER LINE
	CATCH BASIN
UG	UNDERGROUND
AG	ABOVEGROUND
HWAA	HAZARDOUS WASTE ACCUMULATION AREA
HWSA	HAZARDOUS WASTE STORAGE AREA
	VALVE

Updated for HMBP 01-2014 (Parsons)
Updated for SPCC Plan 02-2011 (ETIC)
topock2.env

ADDRESS: SOUTH OF HIGHWAY 40
APPROXIMATELY 14 MILES
SOUTHEAST OF NEEDLES, CALIFORNIA

CONFIDENTIAL

FACILITY DETAIL MAP 3	SAN BERNARDINO COUNTY	BUSINESS NAME: Pacific Gas & Electric Co. TOPOCK COMPRESSOR STATION	MAP NOT TO SCALE

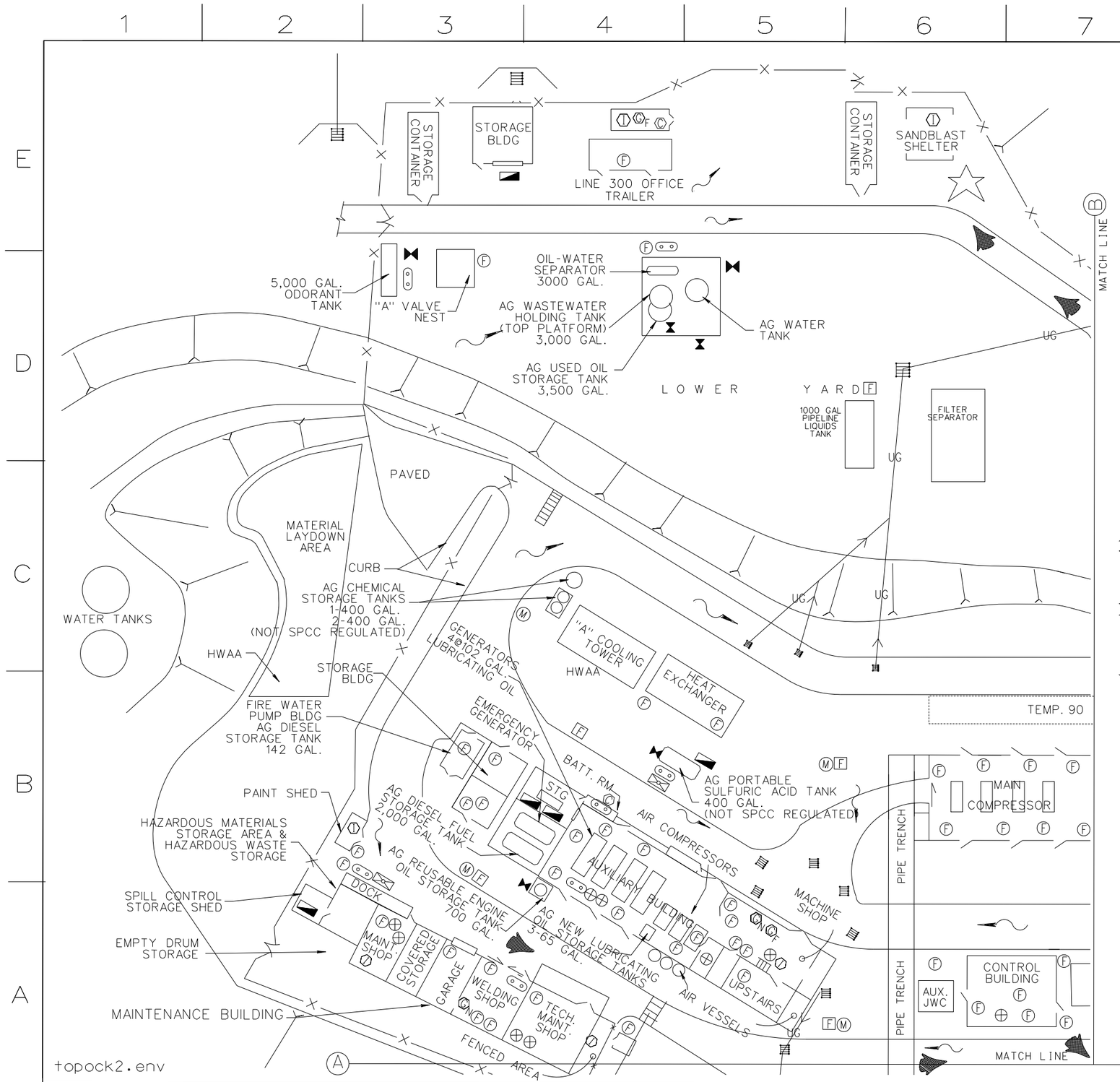

LEGEND

SYMBOL	DESCRIPTION
Ⓕ	FIRE EXTINGUISHER
[F]	FIRE STATION
I	FIRE HOSE CART
■	FIRE HOSE BOX
◪	SPILL CONTROL EQUIPMENT
—/—	WALK DOOR
▭	ROLL-UP DOOR
~	DIRECTION OF SHEET FLOW
→	DIRECTION OF DRAINAGE FLOW
×—×	CHAIN LINK FENCE
——	PROPERTY LINE
—D→	STORM DRAIN
—S→	SEWER LINE
▤	CATCH BASIN
UG	UNDERGROUND
AG	ABOVEGROUND
HWAA	HAZARDOUS WASTE ACCUMULATION AREA
HWSA	HAZARDOUS WASTE STORAGE AREA
Ⓐ	ALARM PULL STATION
⊕	FIRST AID KIT
⊙⊙	EMERGENCY EYE WASH
⊠	EMERGENCY SHOWER
(35)	HAZARDOUS MATERIAL INVENTORY *
[US]	SUMP
Ⓘ	IGNITABLE
ⓒN	COMPRESSED GAS (NON-FLAMMABLE)
ⓒF	COMPRESSED GAS (FLAMMABLE)
Ⓒ	CORROSIVE
Ⓡ	REACTIVE
Ⓣ	TOXIC
[W]	MAIN WATER SHUT-OFF
[E]	MAIN ELECTRIC SHUT-OFF
[G]	MAIN GAS SHUT-OFF
[M]	FUEL / CNG EMERGENCY SHUT-OFF
Ⓜ	EMERGENCY SHUTDOWN STATION PULL HANDLE
⋈	VALVE
▰	EVACUATION ROUTE
☆	ASSEMBLY AREA

CONFIDENTIAL

MAP 3 OF 5

ADDRESS: SOUTH OF HIGHWAY 40
APPROXIMATELY 14 MILES
SOUTHEAST OF NEEDLES, CALIFORNIA

Updated for HMBP 01-2014 (Parsons)

FACILITY DETAIL MAP 4	SAN BERNARDINO COUNTY	BUSINESS NAME: Pacific Gas & Electric Co. TOPOCK COMPRESSOR STATION	MAP NOT TO SCALE

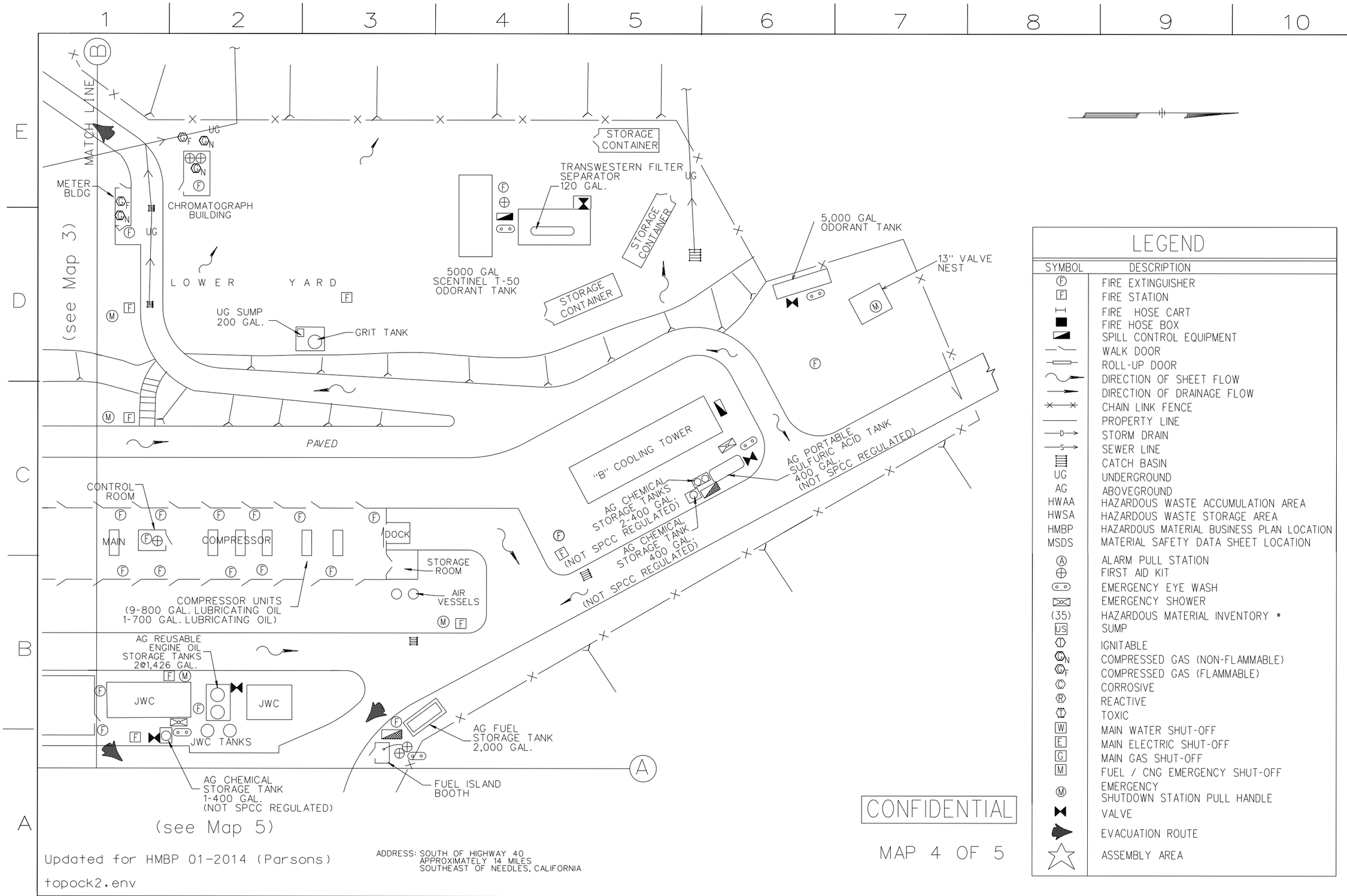

LEGEND

SYMBOL	DESCRIPTION
Ⓕ	FIRE EXTINGUISHER
F	FIRE STATION
	FIRE HOSE CART
	FIRE HOSE BOX
	SPILL CONTROL EQUIPMENT
	WALK DOOR
	ROLL-UP DOOR
	DIRECTION OF SHEET FLOW
	DIRECTION OF DRAINAGE FLOW
	CHAIN LINK FENCE
	PROPERTY LINE
D	STORM DRAIN
S	SEWER LINE
	CATCH BASIN
UG	UNDERGROUND
AG	ABOVEGROUND
HWAA	HAZARDOUS WASTE ACCUMULATION AREA
HWSA	HAZARDOUS WASTE STORAGE AREA
HMBP	HAZARDOUS MATERIAL BUSINESS PLAN LOCATION
MSDS	MATERIAL SAFETY DATA SHEET LOCATION
Ⓐ	ALARM PULL STATION
	FIRST AID KIT
	EMERGENCY EYE WASH
	EMERGENCY SHOWER
(35)	HAZARDOUS MATERIAL INVENTORY #
US	SUMP
Ⓘ	IGNITABLE
ⓒN	COMPRESSED GAS (NON-FLAMMABLE)
ⓒF	COMPRESSED GAS (FLAMMABLE)
Ⓒ	CORROSIVE
Ⓡ	REACTIVE
Ⓣ	TOXIC
W	MAIN WATER SHUT-OFF
E	MAIN ELECTRIC SHUT-OFF
G	MAIN GAS SHUT-OFF
M	FUEL / CNG EMERGENCY SHUT-OFF
Ⓜ	EMERGENCY SHUTDOWN STATION PULL HANDLE
	VALVE
	EVACUATION ROUTE
	ASSEMBLY AREA

CONFIDENTIAL

MAP 4 OF 5

Updated for HMBP 01-2014 (Parsons)

topock2.env

ADDRESS: SOUTH OF HIGHWAY 40
APPROXIMATELY 14 MILES
SOUTHEAST OF NEEDLES, CALIFORNIA

FACILITY DETAIL MAP 5	SAN BERNARDINO COUNTY	BUSINESS NAME: Pacific Gas & Electric Co. TOPOCK COMPRESSOR STATION	MAP NOT TO SCALE

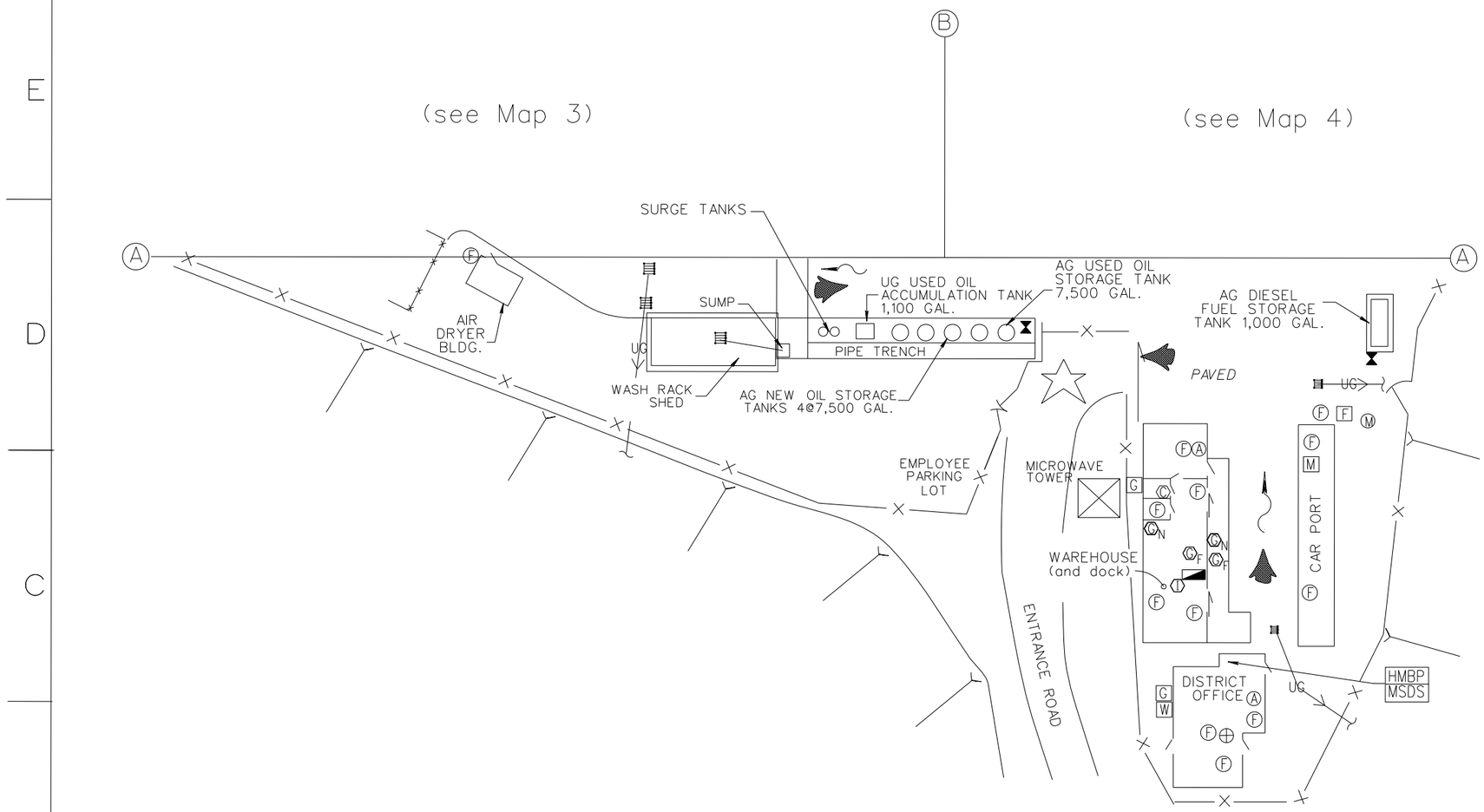

MAP 5 OF 5

LEGEND

SYMBOL	DESCRIPTION
Ⓕ	FIRE EXTINGUISHER
[F]	FIRE STATION
I	FIRE HOSE CART
■	FIRE HOSE BOX
◪	SPILL CONTROL EQUIPMENT
	WALK DOOR
	ROLL-UP DOOR
	DIRECTION OF SHEET FLOW
	DIRECTION OF DRAINAGE FLOW
×—×—×	CHAIN LINK FENCE
	PROPERTY LINE
—D→	STORM DRAIN
—S→	SEWER LINE
	CATCH BASIN
UG	UNDERGROUND
AG	ABOVEGROUND
HWAA	HAZARDOUS WASTE ACCUMULATION AREA
HWSA	HAZARDOUS WASTE STORAGE AREA
HMBP	HAZARDOUS MATERIAL BUSINESS PLAN LOCATION
MSDS	MATERIAL SAFETY DATA SHEET LOCATION
Ⓐ	ALARM PULL STATION
⊕	FIRST AID KIT
⊙⊙	EMERGENCY EYE WASH
⊠	EMERGENCY SHOWER
(35)	HAZARDOUS MATERIAL INVENTORY *
[S]	SUMP
Ⓘ	IGNITABLE
ⒼN	COMPRESSED GAS (NON-FLAMMABLE)
ⒼF	COMPRESSED GAS (FLAMMABLE)
Ⓒ	CORROSIVE
Ⓡ	REACTIVE
Ⓣ	TOXIC
[W]	MAIN WATER SHUT-OFF
[E]	MAIN ELECTRIC SHUT-OFF
[G]	MAIN GAS SHUT-OFF
[M]	FUEL / CNG EMERGENCY SHUT-OFF
Ⓜ	EMERGENCY SHUTDOWN STATION PULLHANDLE
⋈	VALVE
	EVACUATION ROUTE
☆	ASSEMBLY AREA

CONFIDENTIAL

Updated for HMBP 01-2014 (Parsons)

topock2.env

ADDRESS: SOUTH OF HIGHWAY 40
APPROXIMATELY 14 MILES
SOUTHEAST OF NEEDLES, CALIFORNIA

Attachment 2

Hazardous Materials Inventory

(Submitted online via CERS)

Non-Waste Hazardous Materials Inventory Matrix Report

CERS Business/Org. **PG&E**
Facility Name **PG&E: Topock Compressor Station**
I 40 & Park Moabi Road, Needles 92363

Chemical Location **Map 3 / Barrel Storage Container; Map 3 Aux Bldg / Inside-Main Floor**

CERS ID **10148423**
Facility ID **FA0006723**
Status **Submitted** on 1/31/2014 2:11 PM

DOT Code/Fire Haz. Class	Common Name	Unit	Quantities: Max. Daily	Quantities: Largest Cont.	Quantities: Avg. Daily	Annual Waste Amount	Federal Hazard Categories	Hazardous Components (For mixture only): Component Name	% Wt	EHS	CAS No.
	DTE OIL LIGHT	**Gallons**	**220**	**55**	146	0	- Fire	TRICRESYL PHOSPHATE	0 %		1330-78-5
Combustible Liquid, Class III-B	CAS No	State: Liquid	Storage Container: Other		Pressue: Ambient	Waste Code	- Acute Health	ZINC ALKYL DITHIOPHOSPHATE	0 %		68649-42-3
	Map: 1 Grid: B4, A4-5	Type: Mixture	Days on Site: 365		Temperature: > Ambient						

Non-Waste Hazardous Materials Inventory Matrix Report

CERS Business/Org. **PG&E**
Facility Name **PG&E: Topock Compressor Station**
I 40 & Park Moabi Road, Needles 92363

Chemical Location **Map 3 / Haz Mat Stor Area**

CERS ID **10148423**
Facility ID **FA0006723**
Status **Submitted** on 1/31/2014 2:11 PM

DOT Code/Fire Haz. Class	Common Name	Unit	Quantities: Max. Daily	Quantities: Largest Cont.	Quantities: Avg. Daily	Annual Waste Amount	Federal Hazard Categories	Hazardous Components (For mixture only): Component Name	% Wt	EHS	CAS No.
Combustible Liquid, Class II	**COSMOLINE #1102** CAS No Map: 1 Grid: A2	**Gallons** State: Liquid Type: Mixture	**55** Storage Container: Steel Drum Days on Site: 365	**55**	37 Pressue: Ambient Temperature: Ambient	0 Waste Code	- Fire - Acute Health	MINERAL OIL NAPHTHA: STODDARD SOLVENT PETROLATUM ZINC OXIDE	30 % 39 % 30 % 1 %		 8052-41-3 8009-03-8 1314-13-2
Combustible Liquid, Class III-B	**DELVAC 1300 SAE 15W-40** CAS No Map: 1 Grid: A2	**Gallons** State: Liquid Type: Mixture	**55** Storage Container: Steel Drum Days on Site: 365	**55**	37 Pressue: Ambient Temperature: Ambient	0 Waste Code	- Fire - Acute Health	XYLENE ZINC ZINC ALKYL DITHIOPHOSPHATE	0 % 1 % 2 %		1330-20-7 7440-66-6 68649-42-3
DOT: 3 - Flammable and Combustible Liquids Combustible Liquid, Class III-B, Irritant	**DTE HEAVY DUTY MOTOR OIL** CAS No Map: 1 Grid: A2	**Gallons** State: Liquid Type: Mixture	**55** Storage Container: Plastic Bottle or Jug Days on Site: 365	**55**	37 Pressue: Ambient Temperature: Ambient	0 Waste Code	- Fire - Acute Health	NO HAZARDOUS INGREDIENTS PER 29 CFR 1910. 1200			
Irritant	**VALVE ACTUATOR OIL** CAS No Map: 1 Grid: A2	**Gallons** State: Liquid Type: Mixture	**110** Storage Container: Steel Drum Days on Site: 365	**55**	73 Pressue: Ambient Temperature: Ambient	0 Waste Code	- Acute Health	NO HAZARDOUS INGREDIENTS PER 29 CFR 1910. 1200			

Non-Waste Hazardous Materials Inventory Matrix Report

CERS Business/Org. **PG&E**
Facility Name **PG&E: Topock Compressor Station**
I 40 & Park Moabi Road, Needles 92363

Chemical Location **Map 3 / Haz Mat Stor Area; Map 3 Aux Bldg / Covered Area**

CERS ID **10148423**
Facility ID **FA0006723**
Status **Submitted** on 1/31/2014 2:11 PM

DOT Code/Fire Haz. Class	Common Name	Unit	Quantities: Max. Daily	Quantities: Largest Cont.	Quantities: Avg. Daily	Annual Waste Amount	Federal Hazard Categories	Hazardous Components (For mixture only): Component Name	% Wt	EHS	CAS No.
	NEUTRO JEL #110C	**Gallons**	**85**	**55**	57	0	- Acute Health	ETHOXYLATED NONYLPHENOL	10 %		9016-45-8
Other	CAS No	State: Liquid	Storage Container: Can		Pressue: Ambient	Waste Code					
	Map: 1 Grid: A2, A5	Type: Mixture	Days on Site: 365		Temperature: Ambient						

Non-Waste Hazardous Materials Inventory Matrix Report

CERS Business/Org. **PG&E**
Facility Name **PG&E: Topock Compressor Station**
I 40 & Park Moabi Road, Needles 92363

Chemical Location **Map 3 / Haz Mat Stor Area; Map 3 Aux Bldg / Inside-Main Floor**

CERS ID **10148423**
Facility ID **FA0006723**
Status **Submitted** on 1/31/2014 2:11 PM

DOT Code/Fire Haz. Class	Common Name	Unit	Quantities: Max. Daily	Quantities: Largest Cont.	Quantities: Avg. Daily	Annual Waste Amount	Federal Hazard Categories	Hazardous Components (For mixture only): Component Name	% Wt	EHS	CAS No.
Combustible Liquid, Class III-B	**DTE HEAVY MEDIUM LUBRICATING OIL** CAS No Map: 1 Grid: A2, A4-5	**Gallons**	**240**	**65**	160	0	- Fire - Acute Health	MINERAL OIL PARAFFIN	95 % 5 %		8002-74-2

State: Liquid
Storage Container: Aboveground Tank, Steel Drum
Pressue: Ambient
Waste Code:
Type: Mixture
Days on Site: 365
Temperature: Ambient

Non-Waste Hazardous Materials Inventory Matrix Report

CERS Business/Org. **PG&E**
Facility Name **PG&E: Topock Compressor Station**
I 40 & Park Moabi Road, Needles 92363

Chemical Location **Map 3 Aux Bldg / Air Compressor Units, Inside-Main Floor**

CERS ID **10148423**
Facility ID **FA0006723**
Status **Submitted** on 1/31/2014 2:11 PM

DOT Code/Fire Haz. Class	Common Name	Unit	Quantities: Max. Daily	Quantities: Largest Cont.	Quantities: Avg. Daily	Annual Waste Amount	Federal Hazard Categories	Hazardous Components (For mixture only): Component Name	% Wt	EHS	CAS No.
Combustible Liquid, Class III-B	**RARUS SHC 1024 COMPRESSOR OIL** CAS No Map: 1 Grid: A4-5	**Gallons**	**175**	**65**	116	0	- Fire - Acute Health	TRIPHENYL PHOSPHATE	0 %		115-86-6

State: Liquid
Storage Container: Aboveground Tank, Steel Drum
Pressue: Ambient
Waste Code:
Type: Mixture
Days on Site: 365
Temperature: Ambient

Non-Waste Hazardous Materials Inventory Matrix Report

CERS Business/Org. **PG&E**
Facility Name **PG&E: Topock Compressor Station**
I 40 & Park Moabi Road, Needles 92363

Chemical Location **Map 3 Aux Bldg / Battery Room**

CERS ID **10148423**
Facility ID **FA0006723**
Status **Submitted** on 1/31/2014 2:11 PM

DOT Code/Fire Haz. Class	Common Name	Unit	Quantities: Max. Daily	Largest Cont.	Avg. Daily	Annual Waste Amount	Federal Hazard Categories	Hazardous Components (For mixture only): Component Name	% Wt	EHS	CAS No.
Corrosive, Water Reactive, Class 2	**ABSOLYTE IIP(90A23) SEALED GEL-CELL BATTERIES** CAS No Map: 1 Grid: B4	**Pounds** State: Solid Type: Mixture	**186** Storage Container: Other Days on Site: 365	**16**	186 Pressue: Ambient Temperature: Ambient	0 Waste Code	- Reactive - Acute Health	SULFURIC ACID	41 %		7664-93-9
Corrosive, Water Reactive, Class 2	**AT-19 WET CELL LEAD ACID BATTERIES** CAS No Map: 1 Grid: B4	**Gallons** State: Liquid Type: Mixture	**37** Storage Container: Other Days on Site: 365	**3**	37 Pressue: Ambient Temperature: Ambient	0 Waste Code	- Reactive - Acute Health	SULFURIC ACID	8 %		7664-93-9
Corrosive, Water Reactive, Class 2	**AT-23 WET CELL LEAD ACID BATTERIES** CAS No Map: 1 Grid: B4	**Gallons** State: Liquid Type: Mixture	**222** Storage Container: Other Days on Site: 365	**4**	222 Pressue: Ambient Temperature: Ambient	0 Waste Code	- Reactive - Acute Health	SULFURIC ACID	8 %		7664-93-9
Corrosive, Water Reactive, Class 2	**DEKA UNIGY II -SEALED LEAD ACID BATTERY** CAS No Map: 1 Grid: B4	**Pounds** State: Solid Type: Mixture	**481** Storage Container: Other Days on Site: 365	**14**	481 Pressue: Ambient Temperature: Ambient	0 Waste Code	- Reactive - Acute Health	SULFURIC ACID	10 %	✓	7664-93-9

Non-Waste Hazardous Materials Inventory Matrix Report

CERS Business/Org. **PG&E**
Facility Name **PG&E: Topock Compressor Station**
I 40 & Park Moabi Road, Needles 92363

Chemical Location **Map 3 Aux Bldg / Inside-Main Floor**

CERS ID **10148423**
Facility ID **FA0006723**
Status **Submitted** on 1/31/2014 2:11 PM

DOT Code/Fire Haz. Class	Common Name	Unit	Quantities: Max. Daily	Quantities: Largest Cont.	Quantities: Avg. Daily	Annual Waste Amount	Federal Hazard Categories	Hazardous Components (For mixture only): Component Name	% Wt	EHS	CAS No.
	PEGASUS 100/30	**Gallons**	**408**	**102**	408	0	- Fire - Acute Health	PETROLEUM DISTILLATES, HYDROTREATED HEAVY NAPHTHENIC	99 %		64742-52-5
Combustible Liquid, Class III-B	CAS No Map: 1 Grid: A4-5	State: Liquid Type: Mixture	Storage Container: Other Days on Site: 365		Pressue: Ambient Temperature: > Ambient	Waste Code					

Non-Waste Hazardous Materials Inventory Matrix Report

CERS Business/Org. **PG&E**
Facility Name **PG&E: Topock Compressor Station**
I 40 & Park Moabi Road, Needles 92363

Chemical Location **Map 3 Aux Bldg / Machine Shop**

CERS ID **10148423**
Facility ID **FA0006723**
Status **Submitted** on 1/31/2014 2:11 PM

DOT Code/Fire Haz. Class	Common Name	Unit	Quantities: Max. Daily	Quantities: Largest Cont.	Quantities: Avg. Daily	Annual Waste Amount	Federal Hazard Categories	Hazardous Components (For mixture only): Component Name	% Wt	EHS	CAS No.
	Q-SOL 300	**Gallons**	**60**	**30**	40	0	- Fire - Acute Health	PETROLEUM-DISTILLATE	99 %		64742-47-8
Combustible Liquid, Class II	CAS No	State: Liquid	Storage Container: Steel Drum		Pressue: Ambient	Waste Code					
	Map: 1 Grid: A5	Type: Mixture	Days on Site: 365		Temperature: Ambient						

Non-Waste Hazardous Materials Inventory Matrix Report

CERS Business/Org. **PG&E**
Facility Name **PG&E: Topock Compressor Station**
I 40 & Park Moabi Road, Needles 92363

Chemical Location **Map 3 Aux Bldg / Machine Shop; Map 5 Warehouse / Dock**

CERS ID **10148423**
Facility ID **FA0006723**
Status **Submitted** on 1/31/2014 2:11 PM

DOT Code/Fire Haz. Class	Common Name	Unit	Quantities: Max. Daily	Quantities: Largest Cont.	Quantities: Avg. Daily	Annual Waste Amount	Federal Hazard Categories	Hazardous Components (For mixture only): Component Name	% Wt	EHS	CAS No.
DOT: 2.1 - Flammable Gases Flammable Gas	**ACETYLENE** CAS No 74-86-2 Map: 1 Grid: A5, C7	**Cu. Feet** State Gas Type Pure	**2,138** Storage Container Cylinder Days on Site: 365	**316**	1,432 Pressue > Ambient Temperature Ambient	0 Waste Code	- Fire - Reactive - Pressure Release - Acute Health	NITROGEN	100 %		7727-37-9
Oxidizing Gas, Gaseous	**OXYGEN** CAS No 7782-44-7 Map: 1 Grid: A5, C7	**Cu. Feet** State Gas Type Pure	**1,245** Storage Container Cylinder Days on Site: 365	**249**	834 Pressue > Ambient Temperature Ambient	0 Waste Code	- Fire - Pressure Release - Acute Health	OXYGEN	100 %		7782-44-7

Non-Waste Hazardous Materials Inventory Matrix Report

CERS Business/Org. **PG&E**
Facility Name **PG&E: Topock Compressor Station**
I 40 & Park Moabi Road, Needles 92363

Chemical Location **Map 3 Aux Bldg / Oil Storage Tank, outside; Map 5 / Tank Farm**

CERS ID **10148423**
Facility ID **FA0006723**
Status **Submitted** on 1/31/2014 2:11 PM

DOT Code/Fire Haz. Class	Common Name	Unit	Quantities: Max. Daily	Quantities: Largest Cont.	Quantities: Avg. Daily	Annual Waste Amount	Federal Hazard Categories	Hazardous Components (For mixture only): Component Name	% Wt	EHS	CAS No.
	PEGASUS 100/30	**Gallons**	**8,200**	**7,150**	5,467	0	- Fire - Acute Health	PETROLEUM DISTILLATES, HYDROTREATED HEAVY NAPHTHENIC	99 %		64742-52-5
	CAS No	State: Liquid	Storage Container: Aboveground Tank		Pressue: Ambient	Waste Code					
Combustible Liquid, Class III-B	Map: 1 Grid: A4, D5	Type: Mixture	Days on Site: 365		Temperature: Ambient						

Non-Waste Hazardous Materials Inventory Matrix Report

CERS Business/Org. **PG&E**
Facility Name **PG&E: Topock Compressor Station**
I 40 & Park Moabi Road, Needles 92363

Chemical Location **Map 3 Comp Bldg / Inside**

CERS ID **10148423**
Facility ID **FA0006723**
Status **Submitted** on 1/31/2014 2:11 PM

DOT Code/Fire Haz. Class	Common Name	Unit	Quantities: Max. Daily	Quantities: Largest Cont.	Quantities: Avg. Daily	Annual Waste Amount	Federal Hazard Categories	Hazardous Components (For mixture only): Component Name	% Wt	EHS	CAS No.
	PEGASUS 701	**Gallons**	**7,900**	**800**	7,900	0	- Fire - Acute Health	HIGHLY REFINED BASE OILS	90 %		64742-54-7
Combustible Liquid, Class III-B	CAS No	State: Liquid	Storage Container: Other		Pressue: Ambient	Waste Code					
	Map: 1 Grid: B6	Type: Mixture	Days on Site: 365		Temperature: > Ambient						

Non-Waste Hazardous Materials Inventory Matrix Report

CERS Business/Org. **PG&E**
Facility Name **PG&E: Topock Compressor Station**
I 40 & Park Moabi Road, Needles 92363

Chemical Location **Map 3 Cooling Twr A / Chemical Tanks; Map 4 Cooling Twr B / Chemical Tanks**

CERS ID **10148423**
Facility ID **FA0006723**
Status **Submitted** on 1/31/2014 2:11 PM

DOT Code/Fire Haz. Class	Common Name	Unit	Quantities: Max. Daily	Quantities: Largest Cont.	Quantities: Avg. Daily	Annual Waste Amount	Federal Hazard Categories	Hazardous Components (For mixture only): Component Name	% Wt	EHS	CAS No.
Corrosive	**3DTRASAR-184** CAS No Map: 1 Grid: C4, C5	**Gallons** State: Liquid Storage Container: Aboveground Tank Type: Mixture Days on Site: 365	**800**	**400**	534 Pressue: Ambient Temperature: Ambient	0 Waste Code	- Reactive - Acute Health	Phosphonic Acid	60 %		2809-21-4
Corrosive	**3DTRASAR-192** CAS No Map: 1 Grid: C4, C5	**Gallons** State: Liquid Storage Container: Aboveground Tank Type: Mixture Days on Site: 365	**800**	**400**	534 Pressue: Ambient Temperature: Ambient	0 Waste Code	- Reactive - Acute Health	AROMATIC AMINES SULFURIC ACID	5 % 5 %	 ✓	 7664-93-9
Irritant	**NALCO 90005** CAS No Map: 1 Grid: C4, C5	**Gallons** State: Liquid Storage Container: Aboveground Tank Type: Mixture Days on Site: 365	**60**	**30**	40 Pressue: Ambient Temperature: Ambient	0 Waste Code	- Acute Health	DIMETHYL DIOCTYL AMMONIUM CHLORIDE GLYCERIN	60 % 10 %		5538-94-3 56-81-5
Corrosive	**STABREX ST70** CAS No Map: 1 Grid: C4, C5	**Gallons** State: Liquid Storage Container: Aboveground Tank Type: Mixture Days on Site: 365	**800**	**400**	534 Pressue: Ambient Temperature: Ambient	0 Waste Code	- Reactive - Acute Health	SODIUM HYDROXIDE	5 %		1310-73-2

Non-Waste Hazardous Materials Inventory Matrix Report

CERS Business/Org. **PG&E**
Facility Name **PG&E: Topock Compressor Station**
I 40 & Park Moabi Road, Needles 92363

Chemical Location **Map 3 Cooling Twr A / Sulfuric Acid Tank; Map 4 Cooling Twr B / Sulfuric Acid Tank**

CERS ID **10148423**
Facility ID **FA0006723**
Status **Submitted** on 1/31/2014 2:11 PM

DOT Code/Fire Haz. Class	Common Name	Unit	Quantities: Max. Daily	Quantities: Largest Cont.	Quantities: Avg. Daily	Annual Waste Amount	Federal Hazard Categories	Hazardous Components (For mixture only): Component Name	% Wt	EHS	CAS No.
Combustible Liquid, Class III-B, Corrosive, Water Reactive, Class 2	**SULFURIC ACID (93%)**	**Gallons**	**800**	**400**	534	0	- Reactive - Acute Health	SULFURIC ACID	93 %	✓	7664-93-9
	CAS No	State: Liquid	Storage Container: Aboveground Tank		Pressue: Ambient	Waste Code					
	Map: 1 Grid: B5, C6	Type: Mixture	Days on Site: 365		Temperature: Ambient						

Non-Waste Hazardous Materials Inventory Matrix Report

CERS Business/Org. **PG&E**
Facility Name **PG&E: Topock Compressor Station**
I 40 & Park Moabi Road, Needles 92363

Chemical Location **Map 3 Fire Pump Bldg / Inside; Map 3 Lower Yard / Cage Area, End of Carport; Map 5 Warehouse / Comm Room**

CERS ID **10148423**
Facility ID **FA0006723**
Status **Submitted** on 1/31/2014 2:11 PM

DOT Code/Fire Haz. Class	Common Name	Unit	Quantities: Max. Daily	Quantities: Largest Cont.	Quantities: Avg. Daily	Annual Waste Amount	Federal Hazard Categories	Hazardous Components (For mixture only): Component Name	% Wt	EHS	CAS No.
	WET CELL LEAD ACID BATTERIES	**Gallons**	**26**	**3**	23	0	- Reactive - Acute Health	SULFURIC ACID	40 %	✓	7664-93-9
Corrosive, Water Reactive, Class 2	CAS No	State: Liquid	Storage Container: Other		Pressue: Ambient	Waste Code					
	Map: 1 Grid: B3, E4, C-D6	Type: Mixture	Days on Site: 365		Temperature: Ambient						

Non-Waste Hazardous Materials Inventory Matrix Report

CERS Business/Org. **PG&E**
Facility Name **PG&E: Topock Compressor Station**
I 40 & Park Moabi Road, Needles 92363

Chemical Location **Map 3 Lower Yard / Cage Area, End of Carport**

CERS ID **10148423**
Facility ID **FA0006723**
Status **Submitted** on 1/31/2014 2:11 PM

DOT Code/Fire Haz. Class	Common Name	Unit	Quantities: Max. Daily	Quantities: Largest Cont.	Quantities: Avg. Daily	Annual Waste Amount	Federal Hazard Categories	Hazardous Components (For mixture only): Component Name	% Wt	EHS	CAS No.
DOT: 2.1 - Flammable Gases Flammable Gas	**PROPANE** CAS No Map: 1 Grid: E4	**Cu. Feet** State: Gas Type: Mixture	**720** Storage Container: Cylinder Days on Site: 365	**180**	480 Pressue: > Ambient Temperature: Ambient	0 Waste Code	- Fire - Pressure Release - Acute Health	PROPANE			74-98-6

Non-Waste Hazardous Materials Inventory Matrix Report

CERS Business/Org. **PG&E**
Facility Name **PG&E: Topock Compressor Station**
I 40 & Park Moabi Road, Needles 92363

Chemical Location **Map 3 Lower Yard / Odorant Run Tank; Map 4 Lower Yard / Odorant Run Tank**

CERS ID **10148423**
Facility ID **FA0006723**
Status **Submitted** on 1/31/2014 2:11 PM

DOT Code/Fire Haz. Class	Common Name	Unit	Quantities: Max. Daily	Quantities: Largest Cont.	Quantities: Avg. Daily	Annual Waste Amount	Federal Hazard Categories	Hazardous Components (For mixture only): Component Name	% Wt	EHS	CAS No.
	SCENTINEL TB GAS ODORANT	**Gallons**	**10,000**	**5,000**	8,826	0	- Fire	TERT-BUTYL MERCAPTAN	30 %		75-66-1
Flammable Liquid, Class I-A	CAS No	State: Liquid	Storage Container: Other		Pressue: > Ambient	Waste Code	- Acute Health	TETRAHYDROTHIOPHENE	70 %		110-01-0
	Map: 1 Grid: VAR	Type: Mixture	Days on Site: 365		Temperature: Ambient						

Non-Waste Hazardous Materials Inventory Matrix Report

CERS Business/Org. **PG&E**
Facility Name **PG&E: Topock Compressor Station**
I 40 & Park Moabi Road, Needles 92363

Chemical Location **Map 3 Maint. Bldg / Welding Shop**

CERS ID **10148423**
Facility ID **FA0006723**
Status **Submitted** on 1/31/2014 2:11 PM

DOT Code/Fire Haz. Class	Common Name	Unit	Quantities: Max. Daily	Quantities: Largest Cont.	Quantities: Avg. Daily	Annual Waste Amount	Federal Hazard Categories	Hazardous Components (For mixture only): Component Name	% Wt	EHS	CAS No.
	WELDING RODS FLEETWELD 5P	**Pounds**	**650**	**50**	433	0	- Acute Health	CELLULOSE GUM	5 %		9004-32-4
								TITANIUM DIOXIDE	5 %		13463-67-7
Other	CAS No	State: Solid	Storage Container: Can		Pressue: Ambient	Waste Code					
	Map: 1 Grid: A3	Type: Mixture	Days on Site: 365		Temperature: Ambient						

Non-Waste Hazardous Materials Inventory Matrix Report

CERS Business/Org. **PG&E**
Facility Name **PG&E: Topock Compressor Station**
I 40 & Park Moabi Road, Needles 92363

Chemical Location **Map 3 Maint. Bldg / Welding Shop; Map 5 Warehouse / Dock**

CERS ID **10148423**
Facility ID **FA0006723**
Status **Submitted** on 1/31/2014 2:11 PM

DOT Code/Fire Haz. Class	Common Name	Unit	Quantities: Max. Daily	Quantities: Largest Cont.	Quantities: Avg. Daily	Annual Waste Amount	Federal Hazard Categories	Hazardous Components (For mixture only): Component Name	% Wt	EHS	CAS No.
Other Health Hazard	**ARGON(75%)/CARBON DIOXIDE (25%)**	**Cu. Feet**	**750**	**249**	500	0	- Pressure Release	ARGON	75 %		7440-37-1
	CAS No	State: Gas	Storage Container: Cylinder		Pressue: > Ambient	Waste Code		CARBON DIOXIDE	25 %		124-38-9
	Map: 1 Grid: A3, C7	Type: Mixture	Days on Site: 365		Temperature: Ambient						

Non-Waste Hazardous Materials Inventory Matrix Report

CERS Business/Org. **PG&E**
Facility Name **PG&E: Topock Compressor Station**
I 40 & Park Moabi Road, Needles 92363

Chemical Location **Map 4 / E/O Jacket Wtr Coolers**

CERS ID **10148423**
Facility ID **FA0006723**
Status **Submitted** on 1/31/2014 2:11 PM

DOT Code/Fire Haz. Class	Common Name	Unit	Quantities: Max. Daily	Quantities: Largest Cont.	Quantities: Avg. Daily	Annual Waste Amount	Federal Hazard Categories	Hazardous Components (For mixture only): Component Name	% Wt	EHS	CAS No.
	TRAC 101	**Gallons**	**400**	**400**	267	0	- Reactive	Sodium Molbdate	5 %		7631-95-0
	CAS No	State: Liquid	Storage Container: Aboveground Tank		Pressue: Ambient	Waste Code	- Acute Health	SODIUM NITRITE	30 %		7632-00-0
Corrosive	Map: 1 Grid: B1	Type: Mixture	Days on Site: 365		Temperature: Ambient						

Non-Waste Hazardous Materials Inventory Matrix Report

CERS Business/Org. **PG&E**
Facility Name **PG&E: Topock Compressor Station**
I 40 & Park Moabi Road, Needles 92363

Chemical Location **Map 4 / E/O Main Compressor Bldg; Map 5 / Tank Farm**

CERS ID **10148423**
Facility ID **FA0006723**
Status **Submitted** on 1/31/2014 2:11 PM

DOT Code/Fire Haz. Class	Common Name	Unit	Quantities: Max. Daily	Quantities: Largest Cont.	Quantities: Avg. Daily	Annual Waste Amount	Federal Hazard Categories	Hazardous Components (For mixture only): Component Name	% Wt	EHS	CAS No.
	PEGASUS 701	**Gallons**	**25,352**	**7,150**	16,901	0	- Fire - Acute Health	HIGHLY REFINED BASE OILS	90 %		64742-54-7
Combustible Liquid, Class III-B	CAS No	State: Liquid	Storage Container: Aboveground Tank		Pressue: Ambient	Waste Code					
	Map: 1 Grid: A-B2, D5	Type: Mixture	Days on Site: 365		Temperature: Ambient						

Non-Waste Hazardous Materials Inventory Matrix Report

CERS Business/Org. **PG&E**
Facility Name **PG&E: Topock Compressor Station**
I 40 & Park Moabi Road, Needles 92363

Chemical Location **Map 4 Chromatog Bldg / Outside; Map 4 Meter Bldg / Inside/Outside**

CERS ID **10148423**
Facility ID **FA0006723**
Status **Submitted** on 1/31/2014 2:11 PM

DOT Code/Fire Haz. Class	Common Name	Unit	Quantities: Max. Daily	Quantities: Largest Cont.	Quantities: Avg. Daily	Annual Waste Amount	Federal Hazard Categories	Hazardous Components (For mixture only): Component Name	% Wt	EHS	CAS No.
DOT: 2.2 - Nonflammable Gases Other Health Hazard	**HELIUM** CAS No 7440-59-7 Map: 1 Grid: E2, D1	**Cu. Feet** State Gas Type Pure	**2,619** Storage Container Cylinder Days on Site: 365	**291**	1,746 Pressue > Ambient Temperature Ambient	0 Waste Code	- Pressure Release - Acute Health				

Non-Waste Hazardous Materials Inventory Matrix Report

CERS Business/Org. **PG&E**
Facility Name **PG&E: Topock Compressor Station**
I 40 & Park Moabi Road, Needles 92363

Chemical Location **Map 4 Lower Yard / Odorant Tank**

CERS ID **10148423**
Facility ID **FA0006723**
Status **Submitted** on 1/31/2014 2:11 PM

DOT Code/Fire Haz. Class	Common Name	Unit	Quantities: Max. Daily	Quantities: Largest Cont.	Quantities: Avg. Daily	Annual Waste Amount	Federal Hazard Categories	Hazardous Components (For mixture only): Component Name	% Wt	EHS	CAS No.
	SCENTINEL T-50 GAS ODORANT	**Gallons**	**5,000**	**5,000**	3,333		- Fire	TERT-BUTYL MERCAPTAN	50 %		75-66-1
Flammable Liquid, Class I-A	CAS No	State: Liquid	Storage Container: Other		Pressue: > Ambient	Waste Code	- Acute Health	TETRAHYDROTHIOPHENE	50 %		110-01-0
	Map: 1 Grid: D4-E4	Type: Mixture	Days on Site: 365		Temperature: Ambient						

Non-Waste Hazardous Materials Inventory Matrix Report

CERS Business/Org. **PG&E**
Facility Name **PG&E: Topock Compressor Station**
I 40 & Park Moabi Road, Needles 92363

Chemical Location **Map 4 Meter Bldg / Inside/Outside**

CERS ID **10148423**
Facility ID **FA0006723**
Status **Submitted** on 1/31/2014 2:11 PM

DOT Code/Fire Haz. Class	Common Name	Unit	Quantities: Max. Daily	Quantities: Largest Cont.	Quantities: Avg. Daily	Annual Waste Amount	Federal Hazard Categories	Hazardous Components (For mixture only): Component Name	% Wt	EHS	CAS No.
	HYDROGEN	**Cu. Feet**	**249**	**249**	166	0	- Fire - Pressure Release				
Irritant	CAS No 1333-74-0 Map: 1 Grid: D1	State Gas Type Pure	Storage Container Cylinder Days on Site: 365		Pressue > Ambient Temperature Ambient	Waste Code					

Non-Waste Hazardous Materials Inventory Matrix Report

CERS Business/Org. **PG&E**
Facility Name **PG&E: Topock Compressor Station**
I 40 & Park Moabi Road, Needles 92363

Chemical Location **Map 5 Warehouse / Dock**

CERS ID **10148423**
Facility ID **FA0006723**
Status **Submitted** on 1/31/2014 2:11 PM

DOT Code/Fire Haz. Class	Common Name	Unit	Quantities: Max. Daily	Quantities: Largest Cont.	Quantities: Avg. Daily	Annual Waste Amount	Federal Hazard Categories	Hazardous Components (For mixture only): Component Name	% Wt	EHS	CAS No.
	ARGON (25%)/HELIUM (75%)	**Cu. Feet**	**280**	**280**	187	0	- Pressure Release	ARGON	25 %		7440-37-1
		State: Gas	Storage Container: Cylinder		Pressue: > Ambient	Waste Code		HELIUM	75 %		7440-59-7
Other Health Hazard	CAS No										
	Map: 1 Grid: C7	Type: Mixture	Days on Site: 365		Temperature: Ambient						
DOT: 2.2 - Nonflammable Gases	**CARBON DIOXIDE**	**Cu. Feet**	**1,120**	**280**	747	0	- Pressure Release	Carbon Dioxide			124-38-9
		State: Gas	Storage Container: Cylinder		Pressue: > Ambient	Waste Code					
Other Health Hazard	CAS No: 124-38-9										
	Map: 1 Grid: C7	Type: Pure	Days on Site: 365		Temperature: Ambient						

Non-Waste Hazardous Materials Inventory Matrix Report

CERS Business/Org. **PG&E**
Facility Name **PG&E: Topock Compressor Station**
I 40 & Park Moabi Road, Needles 92363

Chemical Location **VARIOUS**

CERS ID **10148423**
Facility ID **FA0006723**
Status **Submitted** on 1/31/2014 2:11 PM

DOT Code/Fire Haz. Class	Common Name	Unit	Quantities: Max. Daily	Quantities: Largest Cont.	Quantities: Avg. Daily	Annual Waste Amount	Federal Hazard Categories	Hazardous Components (For mixture only): Component Name	% Wt	EHS	CAS No.
DOT: 3 - Flammable and Combustible Liquids Combustible Liquid, Class II, Irritant	**DIESEL FUEL, HS, #2** CAS No Map: 1 Grid: VAR	**Gallons** State: Liquid Type: Mixture	**3,172** Storage Container: Aboveground Tank, Other Days on Site: 365	**2,000**	2,188 Pressue: Ambient Temperature: Ambient	0 Waste Code	- Fire - Acute Health	FUELS, DIESEL, NO. 2 GAS OIL, LIGHT HYDRODESULFURIZED MIDDLE DISTILLATE	100 % 0 % 0 %		 64741-44-2 64742-80-9
DOT: 6.1 - Toxic Substances Other Health Hazard	**NITROGEN** CAS No 7727-37-9 Map: 1 Grid: VAR	**Cu. Feet** State: Gas Type: Pure	**2,300** Storage Container: Cylinder Days on Site: 365	**230**	1,534 Pressue: > Ambient Temperature: Ambient	0 Waste Code	- Pressure Release				
DOT: 3 - Flammable and Combustible Liquids Combustible Liquid, Class III-B, Irritant	**UNLEADED GASOLINE** CAS No Map: 1 Grid: VAR	**Gallons** State: Liquid Type: Mixture	**2,079** Storage Container: Aboveground Tank, Plastic Bottle or Jug, Other Days on Site: 365	**2,000**	1,393 Pressue: Ambient Temperature: Ambient	0 Waste Code	- Fire - Acute Health	BENZENE ETHANOL ETHYL BENZENE NAPHTHALENE	5 % 10 % 3 % 2 %	 ✓ 	71-43-2 64-17-5 100-41-4 91-20-3

Attachment 3

Hazardous Waste Inventory

(Submitted online via CERS)

Hazardous Wastes Inventory Matrix Report

CERS Business/Org. **PG&E**
Facility Name **PG&E: Topock Compressor Station**
I 40 & Park Moabi Road, Needles 92363

Chemical Location **Map 3 / Haz Waste Stor Area**

CERS ID **10148423**
Facility ID **FA0006723**
Status **Submitted** on 1/31/2014 2:11 PM

DOT Code/Fire Haz. Class	Common Name	Unit	Quantities: Max. Daily	Quantities: Largest Cont.	Quantities: Avg. Daily	Annual Waste Amount	Federal Hazard Categories	Hazardous Components (For mixture only): Component Name	% Wt	EHS	CAS No.
	WASTE ABSORBENT/DEBRIS CONTAMINATED W/ CHROMIC ACID (10% SOLUTION) CAS No Map: 1 Grid: A2	**Pounds** State: Solid Type: Waste	**500** Storage Container: Steel Drum Days on Site: 365	**500**	330 Pressue: Ambient Temperature: Ambient	20 Waste Code: 181	- Acute Health	Chromic acid ABSORBENT	2 % 95 %		011115-74-5
	WASTE ASBESTOS (FRIABLE) CAS No Map: 1 Grid: A2	**Pounds** State: Solid Type: Waste	**500** Storage Container: Steel Drum Days on Site: 365	**500**	330 Pressue: Ambient Temperature: Ambient	40 Waste Code: 151	- Acute Health - Chronic health	ASBESTOS	50 %		1332-21-4
Other	**WASTE ASBESTOS (NON FRIABLE)** CAS No Map: 1 Grid: A2	**Pounds** State: Solid Type: Waste	**500** Storage Container: Steel Drum Days on Site: 365	**500**	330 Pressue: Ambient Temperature: Ambient	59 Waste Code: 151	- Chronic health	ASBESTOS	50 %		1332-21-4
Other	**WASTE CONSUMER ELECTRONIC DEVICES** CAS No Map: 1 Grid: A2	**Pounds** State: Solid Type: Waste	**500** Storage Container: Steel Drum Days on Site: 365	**500**	330 Pressue: Ambient Temperature: Ambient	601 Waste Code: 181	- Chronic health	LEAD			7439-92-1
	WASTE COOLING TOWER SLUDGE CAS No Map: 1 Grid: A2	**Gallons** State: Liquid Type: Waste	**220** Storage Container: Steel Drum Days on Site: 365	**55**	145 Pressue: Ambient Temperature: Ambient	70 Waste Code: 491		ARSENIC BARIUM CHROMIUM MOLYBDENUM	0 %		7440-38-2 7440-39-3 7440-47-3 7439-98-7
	WASTE FLUORESCENT LIGHT TUBES CAS No Map: 1 Grid: A2	**Pounds** State: Solid Type: Waste	**200** Storage Container: Steel Drum Days on Site: 365	**200**	111 Pressue: Ambient Temperature: Ambient	60 Waste Code: 181	- Acute Health				
Other	**WASTE INORGANIC CONTAMINATED DEBRIS (NON-RCRA)** CAS No Map: 1 Grid: A2	**Pounds** State: Solid Type: Waste	**500** Storage Container: Steel Drum Days on Site: 365	**500**	330 Pressue: Ambient Temperature: Ambient	240 Waste Code: 181	- Acute Health - Chronic health				
Corrosive, Water Reactive, Class 2	**WASTE LEAD ACID BATTERIES** CAS No Map: 1 Grid: A2	**Pounds** State: Solid Type: Waste	**620** Storage Container: Steel Drum Days on Site: 365	**500**	409 Pressue: Ambient Temperature: Ambient	620 Waste Code: 792	- Acute Health	SULFURIC ACID	30 %	✓	7664-93-9

Hazardous Wastes Inventory Matrix Report

CERS Business/Org. **PG&E**
Facility Name **PG&E: Topock Compressor Station**
I 40 & Park Moabi Road, Needles 92363

Chemical Location **Map 3 / Haz Waste Stor Area**

CERS ID **10148423**
Facility ID **FA0006723**
Status **Submitted** on 1/31/2014 2:11 PM

DOT Code/Fire Haz. Class	Common Name	Unit	Quantities: Max. Daily	Quantities: Largest Cont.	Quantities: Avg. Daily	Annual Waste Amount	Federal Hazard Categories	Hazardous Components (For mixture only): Component Name	% Wt	EHS	CAS No.
	WASTE LEAD PAINT CHIPS AND DEBRIS CAS No Map: 1 Grid: A2	**Pounds** State: Solid Type: Waste	**500** Storage Container: Steel Drum Days on Site: 365	**500**	330 Pressue: Ambient Temperature: Ambient	120 Waste Code: 352		LEAD	1 %		7439-92-1
	WASTE LIGHTING HID LAMPS CAS No Map: 1 Grid: A2	**Pounds** State: Solid Type: Waste	**500** Storage Container: Steel Drum Days on Site: 365	**500**	330 Pressue: Ambient Temperature: Ambient	10 Waste Code: 181	- Acute Health				
Flammable Liquid, Class I-A	**WASTE PAINT RELATED MATERIAL** CAS No Map: 1 Grid: A2	**Pounds** State: Solid Type: Waste	**1,000** Storage Container: Steel Drum Days on Site: 365	**500**	660 Pressue: Ambient Temperature: Ambient	760 Waste Code: 343	- Fire - Acute Health	ACETONE TOLUENE XYLENE	10 % 10 % 10 %		67-64-1 108-88-3 1330-20-7
	WASTE PIPELINE LIQUIDS WITH BENZENE CAS No Map: 1 Grid: A2	**Gallons** State: Liquid Type: Waste	**2,800** Storage Container: Steel Drum Days on Site: 365	**1,000**	1,680 Pressue: Ambient Temperature: Ambient	40 Waste Code: 223	- Fire - Acute Health	TPH DIESEL TPH MOTOR OIL TPH GASOLINE	20 % 95 % 10 %		
Other	**WASTE SOIL/DEBRIS CONTAMINATED WITH OIL, DIESEL, MERCAPTAN** CAS No Map: 1 Grid: A2	**Pounds** State: Solid Type: Waste	**500** Storage Container: Steel Drum Days on Site: 365	**500**	330 Pressue: Ambient Temperature: Ambient	20 Waste Code: 223	- Acute Health	Butyl Detergent PETROLEUM HYDROCARBONS t- Butyl Mercaptan	10 % 20 % 50 %		 75-66-1
Other	**WASTE SOIL/DEBRIS CONTAMINATED WITH ORGANICS** CAS No Map: 1 Grid: A2	**Pounds** State: Solid Type: Waste	**2,000** Storage Container: Steel Drum Days on Site: 365	**500**	1,267 Pressue: Ambient Temperature: Ambient	6,280 Waste Code: 352	- Acute Health	BTEX	1 %		
	WASTE SOLVENT CAS No Map: 1 Grid: A2	**Gallons** State: Liquid Type: Waste	**55** Storage Container: Steel Drum Days on Site: 365	**55**	37 Pressue: Ambient Temperature: Ambient	36 Waste Code: 214	- Fire	Decamethylcyclopentasiloxane			

Hazardous Wastes Inventory Matrix Report

CERS Business/Org. **PG&E**
Facility Name **PG&E: Topock Compressor Station**
I 40 & Park Moabi Road, Needles 92363

Chemical Location **Map 3 / Haz Waste Stor Area; Map 3 Aux Bldg / Machine Shop HWAA**

CERS ID **10148423**
Facility ID **FA0006723**
Status **Submitted** on 1/31/2014 2:11 PM

DOT Code/Fire Haz. Class	Common Name	Unit	Quantities Max. Daily	Largest Cont.	Avg. Daily	Annual Waste Amount	Federal Hazard Categories	Hazardous Components (For mixture only) Component Name	% Wt	EHS	CAS No.
	WASTE EMPTY AEROSOLS CANS L/C FLAMMABLE LIQUID	**Pounds**	**500**	**500**	330	100	- Fire	ACETONE	1 %		67-64-1
								TOLUENE	1 %		108-88-3
								XYLENE	1 %		1330-20-7
	CAS No	State: Solid	Storage Container: Steel Drum		Pressue: Ambient	Waste Code: 343					
	Map: 1 Grid: A2, A5	Type: Waste	Days on Site: 365		Temperature: Ambient						

Hazardous Wastes Inventory Matrix Report

CERS Business/Org. **PG&E**
Facility Name **PG&E: Topock Compressor Station**
I 40 & Park Moabi Road, Needles 92363

Chemical Location **Map 3 / Haz Waste Stor Area; Map 5 District Offic / Inside**

CERS ID **10148423**
Facility ID **FA0006723**
Status **Submitted** on 1/31/2014 2:11 PM

DOT Code/Fire Haz. Class	Common Name	Unit	Quantities: Max. Daily	Quantities: Largest Cont.	Quantities: Avg. Daily	Annual Waste Amount	Federal Hazard Categories	Hazardous Components (For mixture only): Component Name	% Wt	EHS	CAS No.
	WASTE DRY CELL BATTERIES	**Pounds**	**500**	**500**	330	0	- Acute Health	MANGANESE DIOXIDE	37 %		1313-13-9
	CAS No	State	Storage Container		Pressue	Waste Code		POTASSIUM HYDROXIDE	8 %		1310-58-3
Other		Solid	Steel Drum, Can		Ambient	181		ZINC	15 %		7440-66-6
	Map: 1 Grid: A2, C7	Type			Temperature						
		Waste	Days on Site: 365		Ambient						

Hazardous Wastes Inventory Matrix Report

CERS Business/Org. **PG&E**
Facility Name **PG&E: Topock Compressor Station**
I 40 & Park Moabi Road, Needles 92363

Chemical Location **Map 3 Lower Yard / Oil Water Separator, Waste Water Holding Tank; Map 4 / Sump at Grit Tank; Map 5 / Wash Rack Shed**

CERS ID **10148423**
Facility ID **FA0006723**
Status **Submitted** on 1/31/2014 2:11 PM

DOT Code/Fire Haz. Class	Common Name	Unit	Quantities: Max. Daily	Quantities: Largest Cont.	Quantities: Avg. Daily	Annual Waste Amount	Federal Hazard Categories	Hazardous Components (For mixture only): Component Name	% Wt	EHS	CAS No.
Other	**WASTE OILY WATER** CAS No Map: 1 Grid: D4, D5, D3	**Gallons** State: Liquid Type: Waste	**6,210** Storage Container: Aboveground Tank, Other Days on Site: 365	**3,000**	4,140 Pressue: Ambient Temperature: Ambient	6,197 Waste Code: 223	- Acute Health	HYDROTREATED HEAVY PARAFFINIC DISTILLATE SOLVENT-DEWAXED HEAVY PARAFFINIC DISTILLATE	10 % 10 %		64742-54-7 64742-65-0

Hazardous Wastes Inventory Matrix Report

CERS Business/Org. **PG&E**
Facility Name **PG&E: Topock Compressor Station**
I 40 & Park Moabi Road, Needles 92363

Chemical Location **Map 3 Lower Yard / Used Oil Storage Tank; Map 5 / Tank Farm**

CERS ID **10148423**
Facility ID **FA0006723**
Status **Submitted** on 1/31/2014 2:11 PM

DOT Code/Fire Haz. Class	Common Name	Unit	Quantities: Max. Daily	Quantities: Largest Cont.	Quantities: Avg. Daily	Annual Waste Amount	Federal Hazard Categories	Hazardous Components (For mixture only): Component Name	% Wt	EHS	CAS No.
Combustible Liquid, Class III-B	**USED OIL FOR RECYCLING** CAS No Map: 1 Grid: D4, D5	**Gallons** State: Liquid Type: Waste	**12,100** Storage Container: Aboveground Tank, Belowground Tank Days on Site: 365	**7,150**	8,066 Pressue: Ambient Temperature: Ambient	8,800 Waste Code: 223	- Fire - Acute Health	HYDROTREATED HEAVY PARAFFINIC DISTILLATE	50 %		64742-54-7
								SOLVENT-DEWAXED HEAVY PARAFFINIC DISTILLATE	50 %		64742-65-0
								SOLVENT-REFINED LIGHT NAPHTHENIC DISTILLATE	50 %		64741-97-5

Attachment 4

Agreements with Emergency Response Agencies

The following firm can be utilized and will be called, if needed, to assist with cleanup and disposal operations.

SPILL CLEANUP, RESPONSE, AND TRANSPORTATION		ARRANGEMENTS
Name Address City Telephone	PSC Industrial Outsourcing Inc. 1802 Shelton Drive Hollister, CA 95023 (800) 321-1030	Oil Spill Response and Hazardous Waste and PCBs - Cleanup and Transportation

Pacific Gas and Electric Company

375 North Wiget Lane, Suite 200
Walnut Creek, CA 94598
510/974-4200

San Bernadino County Fire Department
385 North Arrowhead Avenue
San Bernadino, CA 92415
Attention: Chief Brierty

April 3, 1997

Dear Chief Brierty,

As a generator of hazardous waste, the Pacific Gas and Electric Company is required to obtain letters of agreement with appropriate law enforcement, fire services and medical care providers. The intent of this agreement is to provide reasonable and customary care in the unlikely event of a hazardous waste emergency at the following PG&E facilities located within your vicinity or jurisdiction:

- Topock Compressor Station
- Hinkley Compressor Station

In support of this agreement, PG&E offers to familiarize the San Bernadino County Fire Department with the layout of the facility, the properties and hazards posed by the wastes generated at the facility, places where facility personnel would normally be working, access and egress routes and possible evacuation routes. Much of the technical information may be found in the facilities' Hazardous Materials Business Plan (HMBP) which is included for your reference. A tour of each facility covered by this agreement is available upon request.

To facilitate this process, an agreement form has been included along with a self-addressed stamped envelope. Your assistance in this matter is greatly appreciated. If you have any questions regarding this request, please feel free to call Taha Nassar at (510) 974-4072 or Phil Steiner at (510)974-4075.

Sincerely,

Philip A Steiner
Senior Environmental Consultant

cc. Env Files

LETTER OF AGREEMENT FORM

TITLE 22 (CCR)* HAZARDOUS WASTE CONTINGENCY PLAN AGREEMENT BETWEEN PG&E AND LOCAL EMERGENCY RESPONSE ORGANIZATION

San Bernadino County Fire Department agrees to provide assistance in the event of an emergency at the PG&E facilities listed in the cover letter.

Yes [X] No [ ]

This agreement will remain in effect unless terminated by either party upon 30 days written notice. Please check box and sign below.

A familiarization tour of the facilities covered by this agreement is requested.

Yes [ ] No [X]

PG&E Representative	Emergency Support Representative
Philip A Steiner	JOE ASHBAKER
Name	Name
April 3, 1997	6/24/97
Date	Date
Senior Environmental Consultant	SUPV. ENV. HEALTH SPEC.
Title	Title
Philip A Steiner	
Signature	Signature

Title 22 of the California Code of Regulations, Section 66265.37, Arrangements with Local Authorities.

Pacific Gas and Electric Company
375 North Wiget Lane, Suite 200
Walnut Creek, CA 94598
510/974-4200

San Bernadino Sheriff's Department
1111 Bailey Avenue
Needles, CA 92363
Attention: Captain Morgan

April 3, 1997

Dear Captain Morgan,

As a generator of hazardous waste, the Pacific Gas and Electric Company is required to obtain letters of agreement with appropriate law enforcement, fire services and medical care providers. The intent of this agreement is to provide reasonable and customary care in the unlikely event of a hazardous waste emergency at the following PG&E facilities located within your vicinity or jurisdiction:

- Topock Compressor Station

In support of this agreement, PG&E offers to familiarize the San Bernadino Sheriff's Department with the layout of the facility, the properties and hazards posed by the wastes generated at the facility, places where facility personnel would normally be working, access and egress routes and possible evacuation routes. Much of the technical information may be found in the facilities' Hazardous Materials Business Plan (HMBP) which is included for your reference. A tour of each facility covered by this agreement is available upon request.

To facilitate this process, an agreement form has been included along with a self-addressed stamped envelope. Your assistance in this matter is greatly appreciated. If you have any questions regarding this request, please feel free to call Taha Nassar at (510) 974-4072 or Phil Steiner at (510)974-4075.

Sincerely,

Philip A Steiner
Senior Environmental Consultant

cc. Env Files

GARY PENROD, SHERIFF

April 7, 1997

Pacific Gas and Electric Company
375 North Wiget Lane, Suite 200
Walnut Creek, CA 94598

Attention: Philip A. Steiner

Dear Mr. Steiner,

Attached is the Letter of Agreement Form you sent to our office.

I wanted to bring to your attention that the phone number listed in the manual for our office is incorrect. The correct number is (760) 326-9200.

Also, for future reference, John Trumbull is now the Captain of the Colorado River Station and all correspondence should be directed to him.

Sincerely,

GARY PENROD, SHERIFF
San Bernardino County

John Trumbull, Captain
Colorado River Station

By: J. W. Massey

John W. Massey, Lieutenant
Colorado River Station
1111 Bailey Avenue
Needles, CA 92363
(760) 326-9200

GP:JT:JWM:nh

Attachment

LETTER OF AGREEMENT FORM

TITLE 22 (CCR)* HAZARDOUS WASTE CONTINGENCY PLAN AGREEMENT BETWEEN PG&E AND LOCAL EMERGENCY RESPONSE ORGANIZATION

San Bernadino Sheriff's Department agrees to provide assistance in the event of an emergency at the PG&E facilities listed in the cover letter.

Yes ☒ No ☐

This agreement will remain in effect unless terminated by either party upon 30 days written notice. Please check box and sign below.

A familiarization tour of the facilities covered by this agreement is requested.

Yes ☒ No ☐

PG&E Representative	Emergency Support Representative
Philip A Steiner	John W MASSEY
Name	Name
April 3, 1997	04 07 97
Date	Date
Senior Environmental Consultant	LIEUTENANT
Title	Title
Philip A Steiner	John W. Massey
Signature	Signature

*Title 22 of the California Code of Regulations, Section 66265.37, Arrangements with Local Authorities.

Pacific Gas and Electric Company

375 North Wiget Lane, Suite 200
Walnut Creek, CA 94598
510/974-4200

Needles Community Hospital
1401 Bailey Avenue
Needles, CA 92363
Attention: Bill Price

April 3, 1997

Dear Mr. Price,

As a generator of hazardous waste, the Pacific Gas and Electric Company is required to obtain letters of agreement with appropriate law enforcement, fire services and medical care providers. The intent of this agreement is to provide reasonable and customary care in the unlikely event of a hazardous waste emergency at the following PG&E facilities located within your vicinity or jurisdiction:

- Topock Compressor Station

In support of this agreement, PG&E offers to familiarize the Needles Community Hospital with the layout of the facility, the properties and hazards posed by the wastes generated at the facility, places where facility personnel would normally be working, access and egress routes and possible evacuation routes. Much of the technical information may be found in the facilities' Hazardous Materials Business Plan (HMBP) which is included for your reference. A tour of each facility covered by this agreement is available upon request.

To facilitate this process, an agreement form has been included along with a self-addressed stamped envelope. Your assistance in this matter is greatly appreciated. If you have any questions regarding this request, please feel free to call Taha Nassar at (510) 974-4072 or Phil Steiner at (510)974-4075.

Sincerely,

Philip A Steiner
Senior Environmental Consultant

cc. Env Files

LETTER OF AGREEMENT FORM

TITLE 22 (CCR)* HAZARDOUS WASTE CONTINGENCY PLAN AGREEMENT BETWEEN PG&E AND LOCAL EMERGENCY RESPONSE ORGANIZATION

Needles Community Hospital agrees to provide assistance in the event of an emergency at the PG&E facilities listed in the cover letter.

Yes ☑ No ☐

This agreement will remain in effect unless terminated by either party upon 30 days written notice. Please check box and sign below.

A familiarization tour of the facilities covered by this agreement is requested.

Yes ☐ No ☑

PG&E Representative	Emergency Support Representative
Philip A Steiner	Tim Bates
Name	Name
April 3, 1997	4/7/97
Date	Date
Senior Environmental Consultant	Director, Facilities Management
Title	Title
Philip A Steiner	Tim Bates
Signature	Signature

*Title 22 of the California Code of Regulations, Section 66265.37, Arrangements with Local Authorities.

Attachment 5
Emergency Response Procedure: Hazard Mitigation/Prevention/Abatement [19 CCR §2731(e)]

Briefly describe your business standard operating procedures in the event of a release or threatened release of hazardous materials:

1. Evaluate hazards.
2. If safe, take care of injured.
3. Call 911 or specific emergency responder if the situation appears to be beyond your ability to resolve immediately.
4. Don't attempt any action that is beyond the scope of your knowledge, training or experience.
5. If necessary to evacuate the facility, follow evacuation routes and procedures.
6. Notify internal emergency coordinator (site emergency contact) and/or the assigned Environmental Field Specialist.
7. If necessary, arrange for hazardous materials/emergency response contractor to respond and/or clean up spill.
8. Assure that appropriate agency notifications are made (after situation is stabilized and it is safe to do so).

1. **PREVENTION** (prevent the hazard) – Describe what is done to prevent a release or threatened release of hazardous materials (e.g. discussion of safety and storage procedures).

   a. Complete required routine inspections of facility equipment, piping, tanks, shut-off valves and emergency response equipment.
   b. Perform required maintenance of systems identified in routine inspections.
   c. Provide secondary containment where required to prevent leakage or spills.
   d. Maintain secondary containment (make sure water is removed, leaks and cracks are repaired).
   e. Check packaging and lids of hazardous materials containers during routine inspections.
   f. Promptly clean up small spills and properly dispose of clean up materials.
   g. Segregate incompatible materials.
   h. Keep hazardous materials stored in appropriate locations (designated lockers, sheds, etc.).
   i. Assure that security fencing, locks and gates are in good repair and being used properly.
   j. Keep evacuation map and emergency response procedures prominently posted.

2. **MITIGATION** (reduce the hazard) – What is your immediate response to a leak, spill, fire, explosion, or airborne release (e.g. absorbent on spills, use of fire extinguisher, closing of valves, etc.).

   a. Evaluate hazards.
   b. If safe, take care of injured.
   c. Call 911 or specific emergency responder if the situation appears to be beyond your ability to resolve immediately.
   d. If safe, attempt to put out a fire using appropriate fire extinguisher.
   e. If safe, take steps to prevent leak from worsening or moving towards a waterway or storm drain (close valves, place sand bags or containment booms).
   f. If necessary to evacuate the facility, follow evacuation routes and procedures.
   g. If there is potential for the leak or spill to affect people or the environment near the facility, work with incident commander to notify/evacuate people/animals from the area as appropriate.
   h. Notify internal emergency coordinator (site emergency contact) and/or the assigned Environmental Field Specialist.
   i. If necessary, arrange for hazardous materials/emergency response contractor to respond and/or clean up spill.
   j. Assure that appropriate agency notifications are made (after situation is stabilized and it is safe to do so).

3. **ABATEMENT** (remove the hazard) – Describe what you would do to remove any released material (e.g. clean up company, absorb spill and containerize).

   a. Small leaks and spills should be cleaned up using appropriate absorbent material.
   b. Remove/repair any leaking pipes, tanks, containment or packaging.
   c. Contaminated materials from clean up efforts must be disposed of properly (containerized as hazardous waste and/or removed by qualified hazardous waste contractor).
   d. For large spills (over one gallon, could enter the storm drain or contaminate a wetland, stream, lake or other water body), immediately call a qualified hazardous materials spill response contractor (work with EFS to access PG&E's list of qualified hazardous materials spill response contractors).

Attachment 6
Emergency Response Procedure: Earthquake Vulnerability [19 CCR §2731(c)]

Identify areas of the facility where releases could occur or would require immediate inspection or isolation because of the vulnerability to earthquake related ground motion. *(check all which apply)*:

☐ NOT APPLICABLE

☒ Hazardous Waste/ Hazardous Materials Storage Areas ☐ Production Floor ☐ Process Lines

☐ Bench/ Lab ☐ Waste Treatment ☐ Oil-Filled Transformers

☐ Other (describe):

Identify mechanical systems where releases could occur or would require immediate inspection or isolation because of the vulnerability to earthquake related ground motion. *(check all which apply)*:

☐ NOT APPLICABLE

☒ Utilities ☐ Sprinkler Systems ☒ Cabinets ☒ Shelves

☒ Racks ☐ Pressure Vessels ☒ Gas Cylinders ☒ Tanks

☐ Process Piping ☒ Shutoff Valves ☐ Oil-Filled Transformers

☐ Other (describe):

Attachment 7

Hazardous Waste Generators – Miscellaneous Forms

California Environmental Reporting System (CERS) — Remote Waste Consolidation Site Annual Notification

Facility/Site

PG&E: Topock Compressor Station
I 40 & Park Moabi Road
Needles, CA 92363

CERS ID
10148423
EPA ID Number
CAT080011729

Submittal Status

Submitted on 1/31/2014 by *Megan Silva* of PG&E (San Ramon, CA)

Consolidation Site Information

Interstate 40 and Park Moabi Road, 14 Miles East of Needles
Needles 92363

Description of Remote Location(s)

The types of remote locations include: unstaffed substations and unstaffed customer support facilities. Sources from which the non-RCRA Hazardous waste is collected can come from numerous types of equipment distributed throughout its service territory. Installation and maintenance of this equipment can generate wastes. Examples of electric support equipment are utility poles, street lights, transformers, switches, capacitor banks, service shops, and meters.

Description of Waste(s) Collected

The following types may include the following Non-RCRA Hazardous Waste liquids: antifreeeze-glycol/water, oily water, non-PCB Oils, insulating oil 5-49ppm PCB and Insulating oil greater than or equal to 50ppm PCB. Non-RCRA Hazardous Waste Solids may include: antifreeze-glycol contaminated debris, clean up debris, latex paint, asbestos related waste, mercaptan contaminated debris, empty containers like adhesives, empty containers like consumer products, oily dibris and rags.

On-Site Hazardous Waste Treatment	Estimated Monthly Volume Consolidated
No	11251 Pounds

Basis For Not Needing a Federal Permit

Yes **The hazardous waste being consolidated is not hazardous waste under federal law although the waste is regulated as hazardous waste under California state law.**

The hazardous waste is hazardous waste under federal law, but transportation to and accumulation of the consolidation site of the waste is not submited to permitting requirements under federal law for the following other reason(s):

RCRA does not subject these wastes to permitting requirements

Certifications

Owner/Operator Name	Owner/Operator Title	Date Certified
Michelle Le	Hazardous Material Manager	1/31/2014

ATTACHMENT 8
HAZARDOUS MATERIALS BUSINESS PLAN (HMBP) INSPECTION CHECKLIST

INSTRUCTIONS: Compare the on-site HMBP to actual conditions (note if changes are at agency request). **Notify** local EFS of any changes. **Submit** the (1) completed checklist, (2) inventory, and (3) marked-up facility layout map via one of the following:	
Scan and e-mail *(preferred)*: HazMat@pge.com **Company or U.S. Mail:** PG&E Environmental Operations Hazardous Materials Business Plan Program 3401 Crow Canyon Road San Ramon, CA 94583	Mail originals; maintain file copy for 60 days. Put the site name in the subject line. Send (cc) to your supervisor and local EFS.

Business Owner/ID Page			
	Provide the following information: ☐ Monthly Inspection ☐ Annual Inspection	Facility Name: _____ County: _____ Date of Inspection: _____ HMBP Dated: _____ Facility phone: _____ EPA ID: _____ Inspected by: _____ Contact Phone: _____ Approved by: _____(supervisor)	
	Primary emergency contact information:	**Secondary** emergency contact information:	**Environmental** emergency contact information:
	☐ No changes ☐ Changes noted below Name: _____ Title: _____ Office phone: _____ Cell/Pager: _____ 24-hour phone: _____ Office location: _____ _____	☐ No changes ☐ Changes noted below Name: _____ Title: _____ Office phone: _____ Cell/Pager: _____ 24-hour phone: _____ Office location: _____ _____	☐ No changes ☐ Changes noted below Name: _____ Title: _____ Office phone: _____ Cell/Pager: _____ 24-hour phone: _____ Office location: _____ _____

Facility Layout Map	Note any changes (clearly mark up copy of map) between actual site conditions and what is shown on the HMBP map. Some important things to include (but are not limited to): • Hazardous waste storage (HWS) areas • Hazardous waste accumulation (HWAA) areas • Shut-offs	☐ No changes Changes to: ☐ fences, gates, locks, card readers, keys, guards, access points ☐ structures ☐ tanks or drums (list contents) ☐ oil-filled equipment ☐ emergency procedures or assembly area ☐ other: _____
Emergency Response/ Contingency Plan	What is the emergency evacuation signal (bell, alarm)? Are communication and/or alarm systems in place and operational? What is the "all clear" signal? Are Post-Incident Contacts and Emergency Resources information current?	_____ ☐ Yes. ☐ No (explain): _____ _____ _____ ☐ Yes. ☐ No (changes noted on Emergency Response/Contingency Plan contacts page)
Emergency Equipment Inventory Table	Update tables with current facility conditions, including, but not limited to the locations of: • first aid kits • spill response kits • fire extinguishers • PPE • Eyewash stations (plumbed or ANSI approved only)	☐ No changes ☐ Changes noted on facility layout map and tables.

HAZARDOUS MATERIAL/WASTE CHANGES

IS THIS SITE A SPECIAL THRESHOLD SITE? ☐ **Yes** ☐ **No**
IF SO, IS THRESHOLD APPLICABLE TO: ☐ **MATERIALS** ☐ **WASTE** ☐ **BOTH**
(REFER TO "SPECIAL THRESHOLDS" TABLE)

VENDOR	**PRODUCT NAME (part/product #)**	**NUMBER OF CONTAINERS**	**MEASURE** (lbs., gallons, cubic feet)	**CONTAINER TYPE** (see below)	**LOCATION** (building, grid)
ARE THERE NEW MATERIALS/WASTE ABOVE THRESHOLD? ☐ **Yes** ☐ **No**					
ARE THERE INCREASED MATERIALS/WASTE ABOVE THRESHOLD? ☐ **Yes** ☐ **No**					
LOCATION CHANGES FOR EXISTING MATERIALS/WASTE					

A – Above ground tank	D – Steel drum	G – Carboy	J – Bag	M – Glass bottle	P – Tank wagon
B – Below ground tank	E – Plastic/non-metal drum	H – Silo	K – Box	N – Plastic bottle	Q – Rail car
C – Tank inside building	F – Can	I – Fiber drum	L – Cylinder	O – Tote bin	R - Other

FACILITY INSPECTION LOG

✓ = Yes/Pass

○ = No/Fail

FACILITY NAME: **LOCATION:**

DATE	PCB'S ≥ 50 PPM PRESENT Y(es) or N(o)	BARRICADES OR FENCES IN PLACE	ADEQUATE AISLE SPACE: INCOMPATIBLES ARE SEPARATED	DRUMS ON PALLETS	STORAGE TIMES HAVE NOT BEEN EXCEEDED	ALL REQUIRED WARNING SIGNS ARE POSTED	ALL EMERGENCY EQUIPMENT IS PRESENT AND IN WORKING ORDER	SECONDARY CONTAINMENT IN WORKING ORDER	ALL CONTAINERS ARE CLOSED	ALL CONTAINERS PROPERLY LABELED: LABELS ARE COMPLETE	ALL CONTAINERS IN GOOD CONDITION	NO SPILLS OR LEAKS	NO HAZARDOUS WASTE OUTSIDE OF STORAGE AREA	NO UNIDENTIFED HAZARDOUS WASTE INSIDE OF STORAGE AREA	* SERVICE CENTER INSPECTION, SPCC	* FUEL ISLAND INSPECTION	COMMENTS/CORRECTIVE ACTION TO BE TAKEN	DATE CORRECTIVE ACTION COMPLETED	SIGNATURE

* See Reverse Side

SERVICE CENTER

(Inspection required as dictated by Part II, Section 3, SPCC Plan)

Hazardous Materials Storage Area:

*Stored Securely
* Proper Labels
*Incompatibles Separate
*No Spills/Leaks
*Compressed Gas/Secured/Capped/Labeled

Oil Filled Electrical Equipment Storage Area:

*Equipment Upright
*Drums Labeled
*No Spills/Leaks
*Stored in Proper Location

Storage Tanks/Tanker Trucks:

*No spills/Leaks
*No Evidence of Corrosion/Cracking
*Overfill Precautions in Place
*Leak Detect System Operational

Emergency Equipment:

*Good condition - Protective Clothing
*Fire Extinguishers
*Cleanup Supplies
*Adequate Supplies Available

PG&E Daily Hazardous Waste Tank Inspection Checklist - Exhibit 2

Month:	
Year:	
Site Name:	
Address:	

Instructions: Place a check mark (√) in each box if no problem is found. **Mark with an "X" any box if a problem is found**. Record any problems in Exhibit 10 – Equipment Maintenance Log.

	1	2	3	4	5	6	7	8	9	10	11	12	13	14	15	16	17	18	19	20	21	22	23	24	25	26	27	28	29	30	31
1. Overfill and spill control is in good working order.																															
2. There are no signs of corrosion on any of the aboveground portions of the system.																															
3. There are no signs of a release from any the aboveground portions of the system.																															
4. The fill port is maintained closed except when adding or removing the waste.																															
5. The tank is labeled with the required information: (1) words "Hazardous Waste" (2) PG&E and address (3) contents (4) hazardous property (5) physical state (6) accumulation start date.																															
6. Spill clean up equipment is readily available.																															
Inspectors initials																															

Note: If deficiencies are noted during an inspection then you must make the correction immediately or tag the dispenser "Out-of-Service" and contact your local Environmental Field Specialist for assistance. Record any problems in Exhibit 10- Equipment Maintenance Log.

PG&E Weekly Fuel Island Inspection Checklist for non-EVR Tank & Dispenser Equipment - **Exhibit 4**

NOTE: This checklist is for ALL aboveground and underground tanks, EXCEPT Gasoline USTs that have Phase II EVR Equipment. For Gasoline USTs with EVR equipment, please use exhibits 1 (VST) or 3 (Healy).

Month:	
Year:	
Site Name:	
Address:	

Instructions: Place a check mark (√) in each box if no problem is found. Mark **N/A** if question on checklist is not applicable.
Mark with an "X" any box if a problem is found and record the problem in the **Exhibit 10 Equipment Maintenance Log**.

	WEEK OF MONTH:	WEEK 1	WEEK 2	WEEK 3	WEEK 4
DISPENSER EQUIPMENT	**DATE OF INSPECTION** (MM/DD):				
1. Retractor wheel functioning w/hose at bend 10" off ground? (if applicable)					
2. Hoses are free of kinks, cracks and flat spots? (bend tightly to observe).					
3. Does nozzle hold-open latch operate properly (minimizes vapor to user)?					
4. Does nozzle automatic shut off device operate properly (prevent spill)?					
5. Are the bellows free of holes, cracks, slits, tears?					
6. For UST or stand alone\dispenser: Are the insides of the fuel dispensers free from water, fuel leakage and debris?					
TANK EQUIPMENT					
7. Are the UST's manhole cover, fill tube cap, & gaskets in good condition?					
8. Are UST spill containers beneath the manhole covers clean and dry?					
9. Is the drain valve in the spill container operable with chain?					
10. For gasoline tanks w/vapor recovery only: Does the dry break (poppet valve) spring open and return to closed?					
11. For gasoline tanks: Are the fill and vapor adapter tight on the riser?					
12. For ASTs **without** 24-hour leak detection equipment: is secondary containment (annular or berm) free from liquids?					
OTHER					
13. Is tank system operated in accordance with CARB Executive Orders and Permits to Operate (CUPA and/or Air District) and local regulations?					
14. The Permit to Operate is posted at the fuel island kiosk or nearby building?					
15. Is monitoring equipment functioning properly? (e.g. Veeder-Root TLS, gages etc.)					
16. Inspection checklist is maintained onsite for 3 years or permit requirement.					
	Inspectors Initials or LAN ID:				

NOTE: If deficiencies are noted, you must make the correction immediately or **tag the dispenser Out-Of-Order** and contract your local Environmental Field Specialist for assistance. All alarms and deficiencies **shall be** recorded in Exhibit 10-Equipment Maintenance Log.

Exhibit 5

UNDERGROUND STORAGE TANK SYSTEM
DESIGNATED UST OPERATOR MONTHLY INSPECTION REPORT

Facility Name:	Inspection Date:
Facility Address:	City:
Name of Designated UST Operator Conducting Inspection:	
International Code Council Certification No.:	Expiration Date:
Signature:	Phone: ( ) ext.

N/A = Not Applicable

Item	MONITORING PANEL / ALARM HISTORY	Yes	No	N/A
1.	Is the monitoring system powered on and in proper operating mode?	☐	☐	☐
2.	Is the monitoring system **not** currently showing any leak alarms?	☐	☐	☐
3.	Is the Alarm History Report/log for the previous month available, and has it been reviewed by the Designated UST Operator? *(Attach a copy of the alarm history report/log to this inspection form.)*	☐	☐	☐
4.	Has each alarm for the previous month been responded to appropriately?	☐	☐	☐

UST SYSTEM INSPECTION

5. Are tank-top containment sumps free of water, debris, and hazardous substance? *Note: If the answer to Item 4 was "Yes," skip to Item 6. Sumps where an alarm has occurred in the past month must be inspected if a qualified service technician has not responded to, and properly addressed, the cause of the alarm. Documentation verifying appropriate service should be attached to this report.*

	Yes	No		Yes	No
Sump Location:	☐	☐	Sump Location:	☐	☐
Sump Location:	☐	☐	Sump Location:	☐	☐

6. Are spill buckets (containment structures) free of water, debris, and hazardous substance?

	Yes	No	N/A		Yes	No	N/A
Tank 1 ID –	☐	☐	☐	Tank 4 ID –	☐	☐	☐
Tank 2 ID –	☐	☐	☐	Tank 5 ID –	☐	☐	☐
Tank 3 ID –	☐	☐	☐	Tank 6 ID –	☐	☐	☐

7. Are under-dispenser containment areas free of water, debris, and hazardous substance?

	Yes	No	N/A		Yes	No	N/A
Dispenser –	☐	☐	☐	Dispenser –	☐	☐	☐
Dispenser –	☐	☐	☐	Dispenser –	☐	☐	☐
Dispenser –	☐	☐	☐	Dispenser –	☐	☐	☐
Dispenser –	☐	☐	☐	Dispenser –	☐	☐	☐

8. Leak detection is properly located within under-dispenser containment.

	Yes	No	N/A		Yes	No	N/A
Dispenser –	☐	☐	☐	Dispenser –	☐	☐	☐
Dispenser –	☐	☐	☐	Dispenser –	☐	☐	☐
Dispenser –	☐	☐	☐	Dispenser –	☐	☐	☐
Dispenser –	☐	☐	☐	Dispenser –	☐	☐	☐

	PAPERWORK INSPECTION	Yes	No	N/A	Date Done
9.	Monitoring System Certification was completed within the past 12 months?	☐	☐	☐	
10.	Line Leak Detectors were tested/certified within the past 12 months?	☐	☐	☐	
11.	Spill bucket (containment structure) testing completed within the past 12 months?	☐	☐	☐	
12.	Line tightness testing completed within the required time frame?	☐	☐	☐	
13.	Secondary containment tests completed within the required time frame?	☐	☐	☐	
14.	Enhanced Leak Detection completed within the required time frame?	☐	☐	☐	
15.	Other required testing/maintenance was completed within required time frame? *(List test/maintenance items below.)*				
	Describe Test/Maintenance:	☐	☐	☐	
	Describe Test/Maintenance:	☐	☐	☐	

	FACILITY EMPLOYEE TRAINING	Yes	No	N/A
16.	Have all facility employees received the required on-the-job training within the past year?	☐	☐	☐
17.	Have all facility employees hired within the past 30 days received the required on-the-job training.?	☐	☐	☐

Note: Explain any "No" answers in the "Comments" section on the following page. Those issues require corrective action from the UST owner/operator.

Comments: _____

Required Follow-Up Actions: _____

INSTRUCTIONS

1. The monthly UST system inspection must be conducted by a Designated UST Operator who possesses a current "California UST System Operator" exam issued by the International Code Council (ICC).
2. The Designated UST Operator must alert the UST Owner or Operator of any condition discovered during the monthly visual inspection that may require follow-up actions.
3. A copy of this monthly inspection report must be provided to the UST Owner or Operator.
4 The UST Owner or Operator must maintain a copy of each monthly inspection report and all attachments for the most recent 12 months. The records shall be maintained on-site or, if approved by the local agency, off-site at a readily available location.

Appendix F
Fuel SOP

- Remedy-SOP-02: Safe Fueling and Fuel Handling Policy

(Provided on CD-ROM Only)

Standard Operating Procedure
PG&E Topock Groundwater Remedy
Operations and Maintenance Plan

Title: Safe Fueling and Fuel Handling Policy

Number: Remedy-SOP-02_Rev0

Created Date: 7/15/2013

1 Background and Scope

Pacific Gas and Electric Company (PG&E) is implementing a groundwater remedy near the intersection of Park Moabi Road and Interstate 40, approximately 12 miles southeast of Needles, California at the PG&E Topock Compressor Station (TCS). The objective of this Standard Operating Procedure is to describe the policy required to refuel vehicles, fuel tanks, and equipment/portable containers safely during work on and off the project site.

2 Approvals

Each vendor/contractor must obtain approval from PG&E Topock Site Operations Manager, and or Sr. Environmental Inspector of a) the planned fueling and re-fueling methods for the contracted activities to be performed at the site, and b) the commercial fuel supplier prior to first use for contracted activities.

3 Safety Guidelines During Fueling Operations

PG&E requires all vendors/contractors to follow appropriate procedures during fueling/refueling activities in order to avoid spills and incidents. The following general guidelines will be followed unless pre-approved otherwise:

Preparation, Pre-Fueling and Fueling Guidelines

- Turn off all equipment or engines before refueling.
- When fueling at a pump, remain attentive to the fuel nozzle.
- When not fueling at a fixed pump, stage splash pad containment as needed.
- Identify and locate fire extinguisher prior to fueling.
- Do not become distracted while fueling by electronic devices, reading materials, or conversations with bystanders.
- Use only UL-approved containers for portable gasoline storage cans.
- When filling a portable container, always place the container on level ground and keep the pump nozzle in contact with the container when refueling to avoid a static electricity ignition of fuel vapors. Fill slowly to avoid spillage and skin/clothing contact and use a funnel if needed.
- When fueling from a portable container, stage splash containment as needed.
- Only store fuel in locations approved by PG&E, and never near any ignition sources.

- In the event of a fire, make use of fire extinguisher that is available. If fire cannot be contained, relocate yourself to a safe location and call 911.

General Remote Fueling Considerations

- Position the fuel supply source as close to the equipment to be fueled as is practicable and safe.
- Inspect fuel conveyance hose/equipment and all connections and fittings for signs of wear or defects prior to the initiation of fuel pumping or pouring. If pouring fuel from a portable container, a funnel constructed of suitable material must be used to avoid splashing.
- Stage splash containment and fire extinguisher as needed.
- Ensure the area is free from ignition sources (i.e., hot equipment/work, sources of spark or static electricity).
- Once fueling is complete, deactivate the fuel supply pump prior to removing the fill nozzle from the equipment, and ensure that residual fuel has been emptied from the conveyance hose (as appropriate based on design of the equipment used).
- Inspect work area for any signs of spills, and remove spill pad(s), as appropriate.

3 Communication and Contingency Action

If a spill occurs the appropriate clean-up actions should commence as efficiently and safely as possible. Use a natural fiber push broom and/or a spark resistant shovel or scoop.

In addition, the reason for the spill will be investigated, and the team will modify the fueling procedure or conduct equipment repairs as determined appropriate to minimize the potential for future spills. Further, PG&E Site Operations Manager/Sr. Environmental Inspector must be notified immediately.

4 Waste Management

All waste generated during refueling, such as oily absorbent pads, must be transported and disposed of as directed by PG&E immediately following generation. Do not dispose of any oil/fuel contaminated pads or rags in the soil roll-off bins or waste dumpsters.

Appendix G
PG&E Topock Coagulant Screening Report

(Provided on CD-ROM Only)

February 5, 2014

Mr. John Porcella
CH2M Hill

Nalco Company
2111 E. Dominguez Street
Long Beach, CA 90810
(310) 605-5101
www.nalco.com

SUBJECT: Coagulant Screening

Dear Mr. Porcella:

This report contains findings and recommendations from the jar testing conducted on February 5, 2014 at your request. A wide selection of coagulants and flocculents were screened for their effectiveness on a well backwash sample provided from the backwash of the SA-RW-19 well. Nalco 8187 coagulant and Nalco 7878 flocculent proved very effective in settling a stable solid at a low dose.

The picture shows samples of the well water with 20, 40, 60 and 10 ppm of Nalco 8187 coagulant. The solids flocked well in approximately 5-7 minutes creating a settable particle before the addition of any flocculent. This reaction time should be taken into account in the design of any equipment in the full size plant as 5-7 minutes of reaction time will require the coagulant to be fed well upstream of any clarification device. You will note that the increased chemical dose actually reduced its effectiveness.

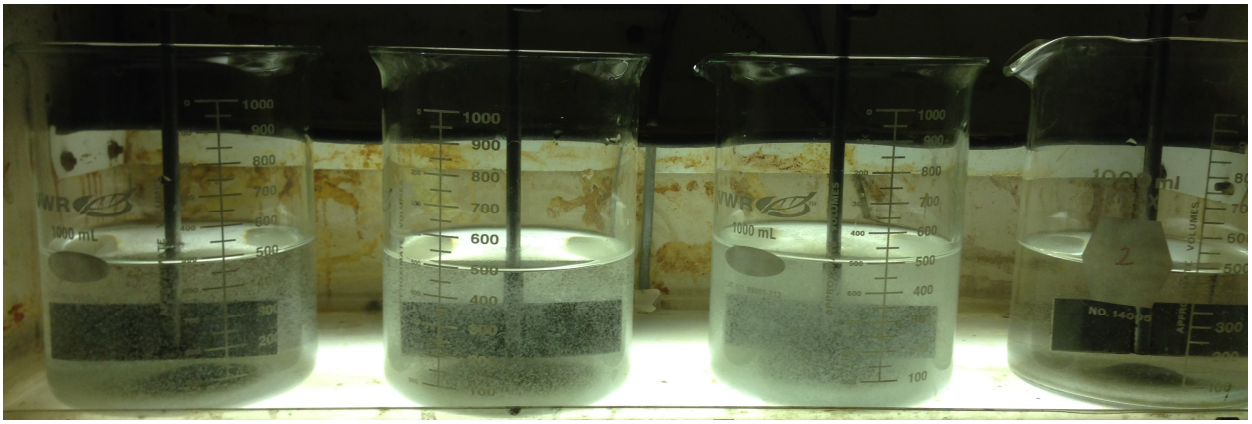

Based on a 10 ppm dose of Nalco 8187, the use rate in the final treatment plant will be quite small. Calculating roughly, it will take 10 gallons of Nalco 8187 to treat 1 million gallons of backwash water. The estimate I was given today was ~20,000 gallons of backwash water per day meaning a 55 gallon drum will last 250 days.

Due to the nature of flocculents requiring a makedown system, the very low expected usage for a flocculent, and the good settling with coagulant alone I would hope that we could get adequate clarification without a flocculent. If a flocculent is required, the dose is in the 1 ppm range meaning a 5 gallon pail will last 250 days. There was some mention of high chloride concentrations in some of the Topock wells. Flocculents are usually susceptible to degradation by high salt concentrations, but the Nalco 7878 is used in similar applications elsewhere and holds up well to high salt concentration waters.

If you have any questions or comments about this report, please contact me at (702) 506-6696 or aggodfrey@nalco.com.

Sincerely,

Andrew Godfrey

SAFETY DATA SHEET

PRODUCT

ULTRION® 8187

EMERGENCY TELEPHONE NUMBER(S)

(800) 424-9300 (24 Hours) CHEMTREC

1. CHEMICAL PRODUCT AND COMPANY IDENTIFICATION

PRODUCT NAME : **ULTRION® 8187**

APPLICATION : WATER CLARIFICATION AID

COMPANY IDENTIFICATION : Nalco Company
1601 W. Diehl Road
Naperville, Illinois
60563-1198

EMERGENCY TELEPHONE NUMBER(S) : (800) 424-9300 (24 Hours) CHEMTREC

NFPA 704M/HMIS RATING
HEALTH : 2 / 2 FLAMMABILITY : 0 / 0 INSTABILITY : 0 / 0 OTHER :
0 = Insignificant 1 = Slight 2 = Moderate 3 = High 4 = Extreme * = Chronic Health Hazard

2. COMPOSITION/INFORMATION ON INGREDIENTS

Our hazard evaluation has identified the following chemical substance(s) as hazardous. Consult Section 15 for the nature of the hazard(s).

Hazardous Substance(s)	CAS NO	% (w/w)
Aluminum Chloride Hydroxide	12042-91-0	30.0 - 60.0

3. HAZARDS IDENTIFICATION

****EMERGENCY OVERVIEW****

WARNING
Irritating to eyes.
Do not get in eyes, on skin or on clothing. Do not take internally. Use with adequate ventilation. In case of contact with eyes, rinse immediately with plenty of water and seek medical advice. After contact with skin, wash immediately with plenty of water. Use a mild soap if available.
Wear suitable protective clothing. Wear chemical splash goggles.
Not flammable or combustible. May evolve HCl under fire conditions.

PRIMARY ROUTES OF EXPOSURE :
Eye, Skin, Inhalation

HUMAN HEALTH HAZARDS - ACUTE :

EYE CONTACT :
Can cause moderate irritation.

SKIN CONTACT :
May cause irritation with prolonged contact.

INGESTION :
Not a likely route of exposure. There may be irritation to the gastro-intestinal tract with nausea and vomiting.

INHALATION :
Not a likely route of exposure. Repeated or prolonged exposure may irritate the respiratory tract.

AGGRAVATION OF EXISTING CONDITIONS :
A review of available data does not identify any worsening of existing conditions.

HUMAN HEALTH HAZARDS - CHRONIC :
No adverse effects expected other than those mentioned above.

4. FIRST AID MEASURES

EYE CONTACT :
Immediately flush eye with water for at least 15 minutes while holding eyelids open. Get medical attention.

SKIN CONTACT :
Flush with large amounts of water. Use soap if available. If symptoms develop, seek medical advice.

INGESTION :
Do not induce vomiting without medical advice. If conscious, washout mouth and give water to drink. Get medical attention.

INHALATION :
Remove to fresh air, treat symptomatically. If symptoms develop, seek medical advice.

NOTE TO PHYSICIAN :
Based on the individual reactions of the patient, the physician's judgement should be used to control symptoms and clinical condition.

5. FIRE FIGHTING MEASURES

FLASH POINT : None

EXTINGUISHING MEDIA :
Not expected to burn. Use extinguishing media appropriate for surrounding fire. Keep containers cool by spraying with water.

FIRE AND EXPLOSION HAZARD :
Not flammable or combustible. May evolve HCl under fire conditions.

SPECIAL PROTECTIVE EQUIPMENT FOR FIRE FIGHTING :
In case of fire, wear a full face positive-pressure self contained breathing apparatus and protective suit.

6. ACCIDENTAL RELEASE MEASURES

PERSONAL PRECAUTIONS :
Restrict access to area as appropriate until clean-up operations are complete. Use personal protective equipment recommended in Section 8 (Exposure Controls/Personal Protection). Stop or reduce any leaks if it is safe to do so. Keep people away from and upwind of spill/leak. Ventilate spill area if possible. Ensure clean-up is conducted by trained personnel only. Do not touch spilled material. Have emergency equipment (for fires, spills, leaks, etc.) readily available. Notify appropriate government, occupational health and safety and environmental authorities.

METHODS FOR CLEANING UP :
SMALL SPILLS: Soak up spill with absorbent material. Place residues in a suitable, covered, properly labeled container. Wash affected area. LARGE SPILLS: Contain liquid using absorbent material, by digging trenches or by diking. Reclaim into recovery or salvage drums or tank truck for proper disposal. Clean contaminated surfaces with water or aqueous cleaning agents. Contact an approved waste hauler for disposal of contaminated recovered material. Dispose of material in compliance with regulations indicated in Section 13 (Disposal Considerations).

ENVIRONMENTAL PRECAUTIONS :
Do not contaminate surface water.

7. HANDLING AND STORAGE

HANDLING :
Do not get in eyes, on skin, on clothing. Do not take internally. Use with adequate ventilation. Do not breathe vapors/gases/dust. Keep the containers closed when not in use. Have emergency equipment (for fires, spills, leaks, etc.) readily available. Ensure all containers are labeled.

STORAGE CONDITIONS :
Store in suitable labeled containers. Store the containers tightly closed. Store separately from bases.

SUITABLE CONSTRUCTION MATERIAL :
PVC, Buna-N, Polyurethane, Polypropylene, Polyethylene, Viton, HDPE (high density polyethylene), 100% phenolic resin liner Compatibility with Plastic Materials can vary; we therefore recommend that compatibility is tested prior to use.

UNSUITABLE CONSTRUCTION MATERIAL :
Brass, Hypalon, Stainless Steel 304, EPDM, Mild steel, Stainless Steel 316L, Neoprene, Epoxy phenolic resin

8. EXPOSURE CONTROLS/PERSONAL PROTECTION

OCCUPATIONAL EXPOSURE LIMITS :
This product does not contain any substance that has an established exposure limit.

ENGINEERING MEASURES :
General ventilation is recommended.

RESPIRATORY PROTECTION :
Where concentrations in air may exceed the limits given in this section or when significant mists, vapors, aerosols, or dusts are generated, an approved air purifying respirator equipped with suitable filter cartridges is recommended. Consult the respirator / cartridge manufacturer data to verify the suitability of specific devices. In event of emergency or planned entry into unknown concentrations a positive pressure, full-facepiece SCBA should be used. If respiratory protection is required, institute a complete respiratory protection program including selection, fit testing, training, maintenance and inspection.

HAND PROTECTION :
When handling this product, the use of chemical gloves is recommended. The choice of work glove depends on work conditions and what chemicals are handled. Please contact the PPE manufacturer for advice on what type of glove material may be suitable. Gloves should be replaced immediately if signs of degradation are observed.

SKIN PROTECTION :
Wear standard protective clothing.

EYE PROTECTION :
Wear chemical splash goggles.

HYGIENE RECOMMENDATIONS :
Use good work and personal hygiene practices to avoid exposure. Keep an eye wash fountain available. Keep a safety shower available. If clothing is contaminated, remove clothing and thoroughly wash the affected area. Launder contaminated clothing before reuse. Always wash thoroughly after handling chemicals. When handling this product never eat, drink or smoke.

HUMAN EXPOSURE CHARACTERIZATION :
Based on our recommended product application and personal protective equipment, the potential human exposure is:
Low

9. PHYSICAL AND CHEMICAL PROPERTIES

PHYSICAL STATE	Liquid
APPEARANCE	Colorless
ODOR	None

SPECIFIC GRAVITY	1.34 @ 77 °F / 25 °C
DENSITY	11.1 lb/gal
SOLUBILITY IN WATER	Complete
pH (100 %)	3.5
FREEZING POINT	32 °F / 0 °C
BOILING POINT	219.2 °F / 104 °C

VAPOR PRESSURE	Same as water
VOC CONTENT	0.00 % EPA Method 24

Note: These physical properties are typical values for this product and are subject to change.

10. STABILITY AND REACTIVITY

STABILITY :
Stable under normal conditions.

HAZARDOUS POLYMERIZATION :
Hazardous polymerization will not occur.

CONDITIONS TO AVOID :
Avoid extremes of temperature.

MATERIALS TO AVOID :
Strong Bases

HAZARDOUS DECOMPOSITION PRODUCTS :
Under fire conditions: HCl

11. TOXICOLOGICAL INFORMATION

No toxicity studies have been conducted on this product.

SENSITIZATION :
This product is not expected to be a sensitizer.

CARCINOGENICITY :
None of the substances in this product are listed as carcinogens by the International Agency for Research on Cancer (IARC), the National Toxicology Program (NTP) or the American Conference of Governmental Industrial Hygienists (ACGIH).

HUMAN HAZARD CHARACTERIZATION :
Based on our hazard characterization, the potential human hazard is: Low

12. ECOLOGICAL INFORMATION

ECOTOXICOLOGICAL EFFECTS :

The following results are for the product.

Acute Fish Results :

Species	Exposure	Test Type	Value	Test Descriptor
Inland Silverside	96 hrs	LC50	> 5,000 mg/l	Product

Rainbow Trout	96 hrs	LC50	590 mg/l	Product
Fathead Minnow	96 hrs	LC50	1,094 mg/l	Product

ACUTE INVERTEBRATE RESULTS :

Species	Exposure	Test Type	Value	Test Descriptor
Daphnia magna	48 hrs	LC50	> 5,000 mg/l	Product
Mysid Shrimp (Mysidopsis bahia)	96 hrs	LC50	4,773 mg/l	Product
Ceriodaphnia dubia	48 hrs	LC50	> 5,000 mg/l	Product

Chronic Invertebrate Results :

Species	Exposure	Test Type	Value	End Point	Test Descriptor
Ceriodaphnia dubia	7 Days	NOEC	15 mg/l	Survival	Product
Ceriodaphnia dubia	7 Days	LOEC	30 mg/l	Survival	Product
Ceriodaphnia dubia	7 Days	EC25 / IC25	7.2 mg/l	Reproduction	Product
Ceriodaphnia dubia	7 Days	IC50	10.3 mg/l	Reproduction	Product

PERSISTENCY AND DEGRADATION :

Total Organic Carbon (TOC) : 99 mg/l

Chemical Oxygen Demand (COD) : 490 mg/l

Biological Oxygen Demand (BOD) :

Incubation Period	Value	Test Descriptor
5 d	< 14 mg/l	Product

Greater than 95% of this product consists of inorganic substances for which a biodegradation value is not applicable.

MOBILITY :
The environmental fate was estimated using a level III fugacity model embedded in the EPI (estimation program interface) Suite TM, provided by the US EPA. The model assumes a steady state condition between the total input and output. The level III model does not require equilibrium between the defined media. The information provided is intended to give the user a general estimate of the environmental fate of this product under the defined conditions of the models.
If released into the environment this material is expected to distribute to the air, water and soil/sediment in the approximate respective percentages;

Air	Water	Soil/Sediment
<5%	30 - 50%	50 - 70%

The portion in water is expected to be soluble or dispersible.

BIOACCUMULATION POTENTIAL
This preparation or material is not expected to bioaccumulate.

ENVIRONMENTAL HAZARD AND EXPOSURE CHARACTERIZATION
Based on our hazard characterization, the potential environmental hazard is: Low
Based on our recommended product application and the product's characteristics, the potential environmental exposure is: Low

If released into the environment, see CERCLA/SUPERFUND in Section 15.

13. DISPOSAL CONSIDERATIONS

If this product becomes a waste, it is not a hazardous waste as defined by the Resource Conservation and Recovery Act (RCRA) 40 CFR 261, since it does not have the characteristics of Subpart C, nor is it listed under Subpart D.

As a non-hazardous waste, it is not subject to federal regulation. Consult state or local regulation for any additional handling, treatment or disposal requirements. For disposal, contact a properly licensed waste treatment, storage, disposal or recycling facility.

14. TRANSPORT INFORMATION

The information in this section is for reference only and should not take the place of a shipping paper (bill of lading) specific to an order. Please note that the proper Shipping Name / Hazard Class may vary by packaging, properties, and mode of transportation. Typical Proper Shipping Names for this product are as follows.

LAND TRANSPORT :

Proper Shipping Name :	PRODUCT IS NOT REGULATED DURING TRANSPORTATION

AIR TRANSPORT (ICAO/IATA) :

Proper Shipping Name :	PRODUCT IS NOT REGULATED DURING TRANSPORTATION

MARINE TRANSPORT (IMDG/IMO) :

Proper Shipping Name :	PRODUCT IS NOT REGULATED DURING TRANSPORTATION

15. REGULATORY INFORMATION

This section contains additional information that may have relevance to regulatory compliance. The information in this section is for reference only. It is not exhaustive, and should not be relied upon to take the place of an individualized compliance or hazard assessment. Nalco accepts no liability for the use of this information.

NATIONAL REGULATIONS, USA :

OSHA HAZARD COMMUNICATION RULE, 29 CFR 1910.1200 :
Based on our hazard evaluation, the following substance(s) in this product is/are hazardous and the reason(s) is/are shown below.

Aluminum Chloride Hydroxide : Eye irritant

CERCLA/SUPERFUND, 40 CFR 302 :
Notification of spills of this product is not required.

SARA/SUPERFUND AMENDMENTS AND REAUTHORIZATION ACT OF 1986 (TITLE III) - SECTIONS 302, 311, 312, AND 313 :

SECTION 302 - EXTREMELY HAZARDOUS SUBSTANCES (40 CFR 355) :
This product does not contain substances listed in Appendix A and B as an Extremely Hazardous Substance.

SECTIONS 311 AND 312 - MATERIAL SAFETY DATA SHEET REQUIREMENTS (40 CFR 370) :
Our hazard evaluation has found this product to be hazardous. The product should be reported under the following indicated EPA hazard categories:

X	Immediate (Acute) Health Hazard
-	Delayed (Chronic) Health Hazard
-	Fire Hazard
-	Sudden Release of Pressure Hazard
-	Reactive Hazard

Under SARA 311 and 312, the EPA has established threshold quantities for the reporting of hazardous chemicals. The current thresholds are: 500 pounds or the threshold planning quantity (TPQ), whichever is lower, for extremely hazardous substances and 10,000 pounds for all other hazardous chemicals.

SECTION 313 - LIST OF TOXIC CHEMICALS (40 CFR 372) :
This product does not contain substances on the List of Toxic Chemicals.

TOXIC SUBSTANCES CONTROL ACT (TSCA) :
The substances in this preparation are included on or exempted from the TSCA 8(b) Inventory (40 CFR 710)

FOOD AND DRUG ADMINISTRATION (FDA) Federal Food, Drug and Cosmetic Act :
When use situations necessitate compliance with FDA regulations, this product is acceptable under : 21 CFR 176.170 Components of paper and paperboard in contact with aqueous and fatty foods and 21 CFR 176.180 Components of paper and paperboard in contact with dry foods.

Product must be used at a pH above 5.5 to retain its FDA status. Limitations: no more than required to produce intended technical effect.

This product has been certified as KOSHER/PAREVE for year-round use INCLUDING THE PASSOVER SEASON by the CHICAGO RABBINICAL COUNCIL.

NSF INTERNATIONAL :
This product has received NSF/International certification under NSF/ANSI Standard 60 in the coagulation and flocculation category. The official name is "Polyaluminum Chloride." Maximum product application dosage is : 180 mg/l.

FEDERAL WATER POLLUTION CONTROL ACT, CLEAN WATER ACT, 40 CFR 401.15 / formerly Sec. 307, 40 CFR 116.4 / formerly Sec. 311 :
Substances listed under this regulation are not intentionally added or expected to be present in this product. Listed components may be present at trace levels.

CLEAN AIR ACT, Sec. 112 (Hazardous Air Pollutants, as amended by 40 CFR 63), Sec. 602 (40 CFR 82, Class I and II Ozone Depleting Substances) :
Substances listed under this regulation are not intentionally added or expected to be present in this product. Listed components may be present at trace levels.

CALIFORNIA PROPOSITION 65 :
Substances listed under California Proposition 65 are not intentionally added or expected to be present in this product.

MICHIGAN CRITICAL MATERIALS :
Substances listed under this regulation are not intentionally added or expected to be present in this product. Listed components may be present at trace levels.

STATE RIGHT TO KNOW LAWS :
Substances listed under this regulation are not intentionally added or expected to be present in this product. Listed components may be present at trace levels.

INTERNATIONAL CHEMICAL CONTROL LAWS :

CANADIAN ENVIRONMENTAL PROTECTION ACT (CEPA) :
The substance(s) in this preparation are included in or exempted from the Domestic Substance List (DSL).

AUSTRALIA
All substances in this product comply with the National Industrial Chemicals Notification & Assessment Scheme (NICNAS).

CHINA
All substances in this product comply with the Provisions on the Environmental Administration of New Chemical Substances and are listed on or exempt from the Inventory of Existing Chemical Substances China (IECSC).

EUROPE
The substances in this preparation have been reviewed for compliance with the EINECS or ELINCS inventories.

JAPAN
All substances in this product comply with the Law Regulating the Manufacture and Importation Of Chemical Substances and are listed on the Existing and New Chemical Substances list (ENCS).

KOREA
All substances in this product comply with the Toxic Chemical Control Law (TCCL) and are listed on the Existing Chemicals List (ECL)

NEW ZEALAND
All substances in this product comply with the Hazardous Substances and New Organisms (HSNO) Act 1996,and are listed on or are exempt from the New Zealand Inventory of Chemicals.

PHILIPPINES
All substances in this product comply with the Republic Act 6969 (RA 6969) and are listed on the Philippines Inventory of Chemicals & Chemical Substances (PICCS).

16. OTHER INFORMATION

Due to our commitment to Product Stewardship, we have evaluated the human and environmental hazards and exposures of this product. Based on our recommended use of this product, we have characterized the product's general risk. This information should provide assistance for your own risk management practices. We have evaluated our product's risk as follows:

* The human risk is: Low

* The environmental risk is: Low

Any use inconsistent with our recommendations may affect the risk characterization. Our sales representative will assist you to determine if your product application is consistent with our recommendations. Together we can implement an appropriate risk management process.

This product material safety data sheet provides health and safety information. The product is to be used in applications consistent with our product literature. Individuals handling this product should be informed of the recommended safety precautions and should have access to this information. For any other uses, exposures should be evaluated so that appropriate handling practices and training programs can be established to insure safe workplace operations. Please consult your local sales representative for any further information.

REFERENCES

Threshold Limit Values for Chemical Substances and Physical Agents and Biological Exposure Indices, American Conference of Governmental Industrial Hygienists, OH., (Ariel Insight™ CD-ROM Version), Ariel Research Corp., Bethesda, MD.

Hazardous Substances Data Bank, National Library of Medicine, Bethesda, Maryland (TOMES CPS™ CD-ROM Version), Micromedex, Inc., Englewood, CO.

IARC Monographs on the Evaluation of the Carcinogenic Risk of Chemicals to Man, Geneva: World Health Organization, International Agency for Research on Cancer.

Integrated Risk Information System, U.S. Environmental Protection Agency, Washington, D.C. (TOMES CPS™ CD-ROM Version),
Micromedex, Inc., Englewood, CO.

Annual Report on Carcinogens, National Toxicology Program, U.S. Department of Health and Human Services, Public Health Service.

Title 29 Code of Federal Regulations, Part 1910, Subpart Z, Toxic and Hazardous Substances, Occupational Safety and Health Administration (OSHA), (Ariel Insight™ CD-ROM Version), Ariel Research Corp., Bethesda, MD.

Registry of Toxic Effects of Chemical Substances, National Institute for Occupational Safety and Health, Cincinnati, OH,
(TOMES CPS™ CD-ROM Version), Micromedex, Inc., Englewood, CO.

Ariel Insight™ (An integrated guide to industrial chemicals covered under major regulatory and advisory programs), North American Module, Western European Module, Chemical Inventories Module and the Generics Module (Ariel Insight™ CD-ROM Version), Ariel Research Corp., Bethesda, MD.

The Teratogen Information System, University of Washington, Seattle, WA (TOMES CPS™ CD-ROM Version), Micromedex, Inc., Englewood, CO.

Prepared By : Product Safety Department
Date issued : 08/21/2012
Version Number : 3.2

SAFETY DATA SHEET

PRODUCT

NALCO® 7878 FLOCCULANT

EMERGENCY TELEPHONE NUMBER(S)

(800) 424-9300 (24 Hours) CHEMTREC

1. CHEMICAL PRODUCT AND COMPANY IDENTIFICATION

PRODUCT NAME : **NALCO® 7878 FLOCCULANT**

APPLICATION : FLOCCULANT

COMPANY IDENTIFICATION : Nalco Company
1601 W. Diehl Road
Naperville, Illinois
60563-1198

EMERGENCY TELEPHONE NUMBER(S) : (800) 424-9300 (24 Hours) CHEMTREC

NFPA 704M/HMIS RATING
HEALTH : 0 / 1 FLAMMABILITY : 1 / 1 INSTABILITY : 0 / 0 OTHER :
0 = Insignificant 1 = Slight 2 = Moderate 3 = High 4 = Extreme * = Chronic Health Hazard

2. COMPOSITION/INFORMATION ON INGREDIENTS

Our hazard evaluation has identified the following chemical substance(s) as hazardous. Consult Section 15 for the nature of the hazard(s).

Hazardous Substance(s)	CAS NO	% (w/w)
Hydrotreated Light Distillate	64742-47-8	20.0 - 40.0
Oxyalkylated alcohol	Proprietary	1.0 - 5.0

3. HAZARDS IDENTIFICATION

****EMERGENCY OVERVIEW****

CAUTION
May cause irritation with prolonged contact. Toxic to aquatic organisms.
Do not get in eyes, on skin, on clothing. Do not take internally. Wear suitable protective clothing. Keep container tightly closed. Water in contact with the product will cause slippery floor conditions. In case of contact with eyes, rinse immediately with plenty of water and seek medical advice. After contact with skin, wash immediately with plenty of soap and water. Protect product from freezing.
May evolve oxides of carbon (COx) under fire conditions.

PRIMARY ROUTES OF EXPOSURE :
Eye, Skin

HUMAN HEALTH HAZARDS - ACUTE :

EYE CONTACT :
May cause irritation with prolonged contact.

SKIN CONTACT :
May cause irritation with prolonged contact.

INGESTION :
Not a likely route of exposure. No adverse effects expected.

INHALATION :
Not a likely route of exposure. Repeated or prolonged exposure may irritate the respiratory tract.

SYMPTOMS OF EXPOSURE :
Acute :
A review of available data does not identify any symptoms from exposure not previously mentioned.
Chronic :
Frequent or prolonged contact with product may defat and dry the skin, leading to discomfort and dermatitis.

AGGRAVATION OF EXISTING CONDITIONS :
A review of available data does not identify any worsening of existing conditions.

4. FIRST AID MEASURES

EYE CONTACT :
Flush affected area with water. If symptoms develop, seek medical advice.

SKIN CONTACT :
Remove contaminated clothing. Wash off affected area immediately with soap and plenty of water. If symptoms develop, seek medical advice.

INGESTION :
Do not induce vomiting without medical advice. If conscious, washout mouth and give water to drink. If symptoms develop, seek medical advice.

INHALATION :
Remove to fresh air, treat symptomatically. If symptoms develop, seek medical advice.

NOTE TO PHYSICIAN :
Based on the individual reactions of the patient, the physician's judgement should be used to control symptoms and clinical condition.

5. FIRE FIGHTING MEASURES

FLASH POINT : Minimum 200 °F / 93.3 °C (PMCC)

EXTINGUISHING MEDIA :
Foam, Dry powder, Carbon dioxide, Other extinguishing agent suitable for Class B fires

UNSUITABLE EXTINGUISHING MEDIA :
Do not use water unless flooding amounts are available.

FIRE AND EXPLOSION HAZARD :
May evolve oxides of carbon (COx) under fire conditions.

SPECIAL PROTECTIVE EQUIPMENT FOR FIRE FIGHTING :
In case of fire, wear a full face positive-pressure self contained breathing apparatus and protective suit.

6. ACCIDENTAL RELEASE MEASURES

PERSONAL PRECAUTIONS :
Notify appropriate government, occupational health and safety and environmental authorities. Do not touch spilled material. Stop or reduce any leaks if it is safe to do so. Use personal protective equipment recommended in Section 8 (Exposure Controls/Personal Protection).

METHODS FOR CLEANING UP :
SMALL SPILLS: Soak up spill with absorbent material. Place residues in a suitable, covered, properly labeled container. Wash affected area. LARGE SPILLS: Contain liquid using absorbent material, by digging trenches or by diking. Reclaim into recovery or salvage drums or tank truck for proper disposal. Contact an approved waste hauler for disposal of contaminated recovered material. Dispose of material in compliance with regulations indicated in Section 13 (Disposal Considerations).

ENVIRONMENTAL PRECAUTIONS :
This product is toxic to fish. It should not be directly discharged into lakes, ponds, streams, waterways or public water supplies.

7. HANDLING AND STORAGE

HANDLING :
Do not take internally. Have emergency equipment (for fires, spills, leaks, etc.) readily available. Ensure all containers are labeled. Avoid eye and skin contact.

STORAGE CONDITIONS :
Store separately from oxidizers. Store the containers tightly closed.

8. EXPOSURE CONTROLS/PERSONAL PROTECTION

OCCUPATIONAL EXPOSURE LIMITS :
This product does not contain any substance that has an established exposure limit.

ENGINEERING MEASURES :
General ventilation is recommended.

RESPIRATORY PROTECTION :
Due to its low volatility and toxicity, the hazard potential associated with this material is relatively low. Respiratory protection is not normally needed.

HAND PROTECTION :
Nitrile gloves PVC gloves

SKIN PROTECTION :
Wear standard protective clothing.

EYE PROTECTION :
Wear chemical splash goggles.

HYGIENE RECOMMENDATIONS :
Keep an eye wash fountain available. Keep a safety shower available.

HUMAN EXPOSURE CHARACTERIZATION :
Based on our recommended product application and personal protective equipment, the potential human exposure is:
Low

9. PHYSICAL AND CHEMICAL PROPERTIES

PHYSICAL STATE	Liquid
APPEARANCE	Off-white
ODOR	Hydrocarbon

SPECIFIC GRAVITY	1.1 @ 72 °F / 22 °C
DENSITY	9.2 lb/gal
SOLUBILITY IN WATER	Emulsifiable
pH (100 %)	7.6
BOILING POINT	210 °F / 98.88 °C
VOC CONTENT	27.04 % EPA Method 24

Note: These physical properties are typical values for this product and are subject to change.

10. STABILITY AND REACTIVITY

STABILITY :
Stable under normal conditions.

HAZARDOUS POLYMERIZATION :
Hazardous polymerization will not occur.

CONDITIONS TO AVOID :
Freezing temperatures.

MATERIALS TO AVOID :
Addition of water results in gelling. Contact with strong oxidizers (e.g. chlorine, peroxides, chromates, nitric acid, perchlorate, concentrated oxygen, permanganate) may generate heat, fires, explosions and/or toxic vapors.

HAZARDOUS DECOMPOSITION PRODUCTS :
Under fire conditions: Oxides of carbon

11. TOXICOLOGICAL INFORMATION

No toxicity studies have been conducted on this product.

SENSITIZATION :
This product is not expected to be a sensitizer.

CARCINOGENICITY :
None of the substances in this product are listed as carcinogens by the International Agency for Research on Cancer (IARC), the National Toxicology Program (NTP) or the American Conference of Governmental Industrial Hygienists (ACGIH).

HUMAN HAZARD CHARACTERIZATION :
Based on our hazard characterization, the potential human hazard is: Low

12. ECOLOGICAL INFORMATION

ECOTOXICOLOGICAL EFFECTS :

No toxicity studies have been conducted on this product.

MOBILITY :
The environmental fate was estimated using a level III fugacity model embedded in the EPI (estimation program interface) Suite TM, provided by the US EPA. The model assumes a steady state condition between the total input and output. The level III model does not require equilibrium between the defined media. The information provided is intended to give the user a general estimate of the environmental fate of this product under the defined conditions of the models.
If released into the environment this material is expected to distribute to the air, water and soil/sediment in the approximate respective percentages;

Air	Water	Soil/Sediment
<5%	10 - 30%	70 - 90%

The portion in water is expected to be soluble or dispersible.

BIOACCUMULATION POTENTIAL
This preparation or material is not expected to bioaccumulate.

ENVIRONMENTAL HAZARD AND EXPOSURE CHARACTERIZATION
Based on our hazard characterization, the potential environmental hazard is: Moderate
Based on our recommended product application and the product's characteristics, the potential environmental exposure is: Moderate

If released into the environment, see CERCLA/SUPERFUND in Section 15.

13. DISPOSAL CONSIDERATIONS

If this product becomes a waste, it is not a hazardous waste as defined by the Resource Conservation and Recovery Act (RCRA) 40 CFR 261, since it does not have the characteristics of Subpart C, nor is it listed under Subpart D.

As a non-hazardous waste, it is not subject to federal regulation. Consult state or local regulation for any additional handling, treatment or disposal requirements. For disposal, contact a properly licensed waste treatment, storage, disposal or recycling facility.

14. TRANSPORT INFORMATION

The information in this section is for reference only and should not take the place of a shipping paper (bill of lading) specific to an order. Please note that the proper Shipping Name / Hazard Class may vary by packaging, properties, and mode of transportation. Typical Proper Shipping Names for this product are as follows.

LAND TRANSPORT :

Proper Shipping Name : PRODUCT IS NOT REGULATED DURING TRANSPORTATION

AIR TRANSPORT (ICAO/IATA) :

Proper Shipping Name : PRODUCT IS NOT REGULATED DURING TRANSPORTATION

MARINE TRANSPORT (IMDG/IMO) :

Proper Shipping Name : PRODUCT IS NOT REGULATED DURING TRANSPORTATION

15. REGULATORY INFORMATION

This section contains additional information that may have relevance to regulatory compliance. The information in this section is for reference only. It is not exhaustive, and should not be relied upon to take the place of an individualized compliance or hazard assessment. Nalco accepts no liability for the use of this information.

NATIONAL REGULATIONS, USA :

OSHA HAZARD COMMUNICATION RULE, 29 CFR 1910.1200 :
Based on our hazard evaluation, the following substance(s) in this product is/are hazardous and the reason(s) is/are shown below.

Hydrotreated Light Distillate : Exposure Limit
Oxyalkylated alcohol : Eye irritant

CERCLA/SUPERFUND, 40 CFR 117, 302 :
Notification of spills of this product is not required.

SARA/SUPERFUND AMENDMENTS AND REAUTHORIZATION ACT OF 1986 (TITLE III) - SECTIONS 302, 311, 312, AND 313 :

SECTION 302 - EXTREMELY HAZARDOUS SUBSTANCES (40 CFR 355) :
This product does not contain substances listed in Appendix A and B as an Extremely Hazardous Substance.

SECTIONS 311 AND 312 - MATERIAL SAFETY DATA SHEET REQUIREMENTS (40 CFR 370) :
Our hazard evaluation has found this product to be hazardous. The product should be reported under the following indicated EPA hazard categories:

X	Immediate (Acute) Health Hazard
	Delayed (Chronic) Health Hazard
	Fire Hazard
	Sudden Release of Pressure Hazard
	Reactive Hazard

Under SARA 311 and 312, the EPA has established threshold quantities for the reporting of hazardous chemicals. The current thresholds are: 500 pounds or the threshold planning quantity (TPQ), whichever is lower, for extremely hazardous substances and 10,000 pounds for all other hazardous chemicals.

SECTION 313 - LIST OF TOXIC CHEMICALS (40 CFR 372) :
This product does not contain substances on the List of Toxic Chemicals.

TOXIC SUBSTANCES CONTROL ACT (TSCA) :
The substances in this preparation are included on or exempted from the TSCA 8(b) Inventory (40 CFR 710)

FOOD AND DRUG ADMINISTRATION (FDA) Federal Food, Drug and Cosmetic Act :
When use situations necessitate compliance with FDA regulations, this product is acceptable under : 21 CFR 176.180 Components of paper and paperboard in contact with dry foods

Limitations: no more than required to produce intended technical effect.

FEDERAL WATER POLLUTION CONTROL ACT, CLEAN WATER ACT, 40 CFR 401.15 / formerly Sec. 307, 40 CFR 116.4 / formerly Sec. 311 :
Substances listed under this regulation are not intentionally added or expected to be present in this product. Listed components may be present at trace levels.

CLEAN AIR ACT, Sec. 112 (40 CFR 61, Hazardous Air Pollutants), Sec. 602 (40 CFR 82, Class I and II Ozone Depleting Substances) :
Substances listed under this regulation are not intentionally added or expected to be present in this product. Listed components may be present at trace levels.

CALIFORNIA PROPOSITION 65 :
Substances listed under California Proposition 65 are not intentionally added or expected to be present in this product.
Substances listed under California Proposition 65 are not intentionally added or expected to be present in this product.

MICHIGAN CRITICAL MATERIALS :
Substances listed under this regulation are not intentionally added or expected to be present in this product. Listed components may be present at trace levels. Substances listed under this regulation are not intentionally added or expected to be present in this product. Listed components may be present at trace levels.

STATE RIGHT TO KNOW LAWS :
Substances listed under this regulation are not intentionally added or expected to be present in this product. Listed components may be present at trace levels.

NATIONAL REGULATIONS, CANADA :

WORKPLACE HAZARDOUS MATERIALS INFORMATION SYSTEM (WHMIS) :
This product has been classified in accordance with the hazard criteria of the Controlled Products Regulations (CPR) and the MSDS contains all the information required by the CPR.

WHMIS CLASSIFICATION :
Not considered a WHMIS controlled product.

CANADIAN ENVIRONMENTAL PROTECTION ACT (CEPA) :
The substance(s) in this preparation are included in or exempted from the Domestic Substance List (DSL).

AUSTRALIA
All substances in this product comply with the National Industrial Chemicals Notification & Assessment Scheme (NICNAS).

CHINA
All substances in this product comply with the Provisions on the Environmental Administration of New Chemical Substances and are listed on the Inventory of Existing Chemical Substances China (IECSC).

EUROPE
The substances in this preparation have been reviewed for compliance with the EINECS or ELINCS inventories.

JAPAN
All substances in this product comply with the Law Regulating the Manufacture and Importation Of Chemical Substances and are listed on the Existing and New Chemical Substances list (ENCS).

KOREA
All substances in this product comply with the Toxic Chemical Control Law (TCCL) and are listed on the Existing Chemicals List (ECL)

NEW ZEALAND
All substances in this product comply with the Hazardous Substances and New Organisms (HSNO) Act 1996,and are listed on or are exempt from the New Zealand Inventory of Chemicals.

PHILIPPINES
All substances in this product comply with the Republic Act 6969 (RA 6969) and are listed on the Philippines Inventory of Chemicals & Chemical Substances (PICCS).

16. OTHER INFORMATION

Due to our commitment to Product Stewardship, we have evaluated the human and environmental hazards and exposures of this product. Based on our recommended use of this product, we have characterized the product's general risk. This information should provide assistance for your own risk management practices. We have evaluated our product's risk as follows:

* The human risk is: Low

* The environmental risk is: Moderate

Any use inconsistent with our recommendations may affect the risk characterization. Our sales representative will assist you to determine if your product application is consistent with our recommendations. Together we can implement an appropriate risk management process.

This product material safety data sheet provides health and safety information. The product is to be used in applications consistent with our product literature. Individuals handling this product should be informed of the recommended safety precautions and should have access to this information. For any other uses, exposures should be evaluated so that appropriate handling practices and training programs can be established to insure safe workplace operations. Please consult your local sales representative for any further information.

REFERENCES

Threshold Limit Values for Chemical Substances and Physical Agents and Biological Exposure Indices, American Conference of Governmental Industrial Hygienists, OH., (Ariel Insight CD-ROM Version), Ariel Research Corp., Bethesda, MD.

Hazardous Substances Data Bank, National Library of Medicine, Bethesda, Maryland (TOMES CPS CD-ROM Version), Micromedex, Inc., Englewood, CO.

IARC Monographs on the Evaluation of the Carcinogenic Risk of Chemicals to Man, Geneva: World Health Organization, International Agency for Research on Cancer.

Integrated Risk Information System, U.S. Environmental Protection Agency, Washington, D.C. (TOMES CPS CD-ROM Version), Micromedex, Inc., Englewood, CO.

Annual Report on Carcinogens, National Toxicology Program, U.S. Department of Health and Human Services, Public Health Service.

Title 29 Code of Federal Regulations, Part 1910, Subpart Z, Toxic and Hazardous Substances, Occupational Safety and Health Administration (OSHA), (Ariel Insight CD-ROM Version), Ariel Research Corp., Bethesda, MD.

Registry of Toxic Effects of Chemical Substances, National Institute for Occupational Safety and Health, Cincinnati, OH, (TOMES CPS CD-ROM Version), Micromedex, Inc., Englewood, CO.

Ariel Insight (An integrated guide to industrial chemicals covered under major regulatory and advisory programs), North American Module, Western European Module, Chemical Inventories Module and the Generics Module (Ariel Insight CD-ROM Version), Ariel Research Corp., Bethesda, MD.

The Teratogen Information System, University of Washington, Seattle, WA (TOMES CPS CD-ROM Version), Micromedex, Inc., Englewood, CO.

Prepared By : Product Safety Department
Date issued : 07/31/2009
Version Number : 1.9

Operation and Maintenance Manual

Volume 2

Sampling and Monitoring Plan

Final (100%) Design Submittal for the Final Groundwater Remedy

PG&E Topock Compressor Station, Needles, California

Prepared for

Pacific Gas and Electric Company

November 2015

CH2MHILL®

155 Grand Avenue
Suite 800
Oakland, California 94612

Contents

Acronyms and Abbreviations ..... **vii**

1 Introduction **1-1**
1.1 Compliance Monitoring During Remedy Implementation 1-1
1.2 Process Control Monitoring During Remedy Implementation 1-1
1.2.1 Summary of In Situ Remediation Chemistry 1-2
1.2.2 Adaptive Operations Approach 1-2
1.2.3 Short-Term Goals—Operating Properly and Successfully and Five-Year Reviews 1-3

2 Monitoring Goals and Data Quality Objectives **2-1**
2.1 Remedy Compliance Monitoring Program 2-1
2.2 Process Control Monitoring Program 2-4
2.2.1 National Trails Highway In-situ Reactive Zone (NTH IRZ) 2-4
2.2.2 Inner Recirculation Loop (IRL) 2-10
2.2.3 Topock Compressor Station (TCS) Recirculation Loop 2-14
2.2.4 Freshwater Injection 2-16

3 Remedy Compliance Monitoring **3-1**
3.1 Monitoring Locations, Anticipated Concentration Changes, and Timeframes 3-1
3.2 Sampling Analytes and Frequencies 3-2

4 In-Situ Remediation Performance Monitoring **4-1**
4.1 Anticipated Concentration Ranges and Timeframes 4-1
4.2 Sampling Locations, Analytes and Frequencies 4-3
4.2.1 IRZ, IRL, and TCS Dose Response Monitoring Wells 4-3
4.2.2 IRZ, IRL, and TCS Downgradient Monitoring Wells 4-5
4.2.3 River Bank Extraction and Northern NTH Extraction Monitoring Wells 4-5
4.2.4 Transwestern Bench and East Ravine Extraction Monitoring Wells 4-6
4.2.5 Extraction Wells 4-6
4.2.6 Combined Extraction Streams and Freshwater Source 4-7
4.2.7 Freshwater Arsenic Monitoring Wells 4-7
4.2.8 Carbon Amendment System Sampling Locations 4-8
4.2.9 Water Level Monitoring 4-8
4.3 Hydraulic Control Evaluation 4-8
4.3.1 Objective and Approach 4-8
4.3.2 Definition of Hydraulic Control Requirements in Conjunction with CSM and RAOs 4-9
4.3.3 Interpretation of the Actual Zone of Hydraulic Control 4-10
4.3.4 Demonstration of Consistency Between Required Control and the Actual Zone of Hydraulic Control 4-13

5 Other Sampling and Monitoring **5-1**
5.1 Monitoring for COPCs 5-1
5.1.1 Sampling Locations 5-1
5.1.2 COPC Perimeter Assessment Plan 5-2
5.1.3 Sampling Frequencies 5-2
5.2 Monitoring of Freshwater Source (HNWR-1A) 5-3
5.2.1 Proposed Analytes and Frequencies 5-3
5.2.2 Source Water Assessment 5-4
5.3 Process Control Monitoring for Remedy-produced Water Management System 5-6

5.3.1 Sampling Locations 5-6
5.3.2 Sampling Analytes and Frequencies 5-9
5.4 Monitoring for Domestic/Private Wells 5-9
5.4.1 Sampling Locations and Logistics 5-9
5.4.2 Sampling Analytes and Frequencies 5-9

6 Data Management, Documentation, and Reporting 6-1
6.1 Data Validation 6-1
6.2 Data Evaluation 6-1
6.3 Data Management 6-1
6.4 Recordkeeping 6-3
6.5 Reporting 6-3

7 Sampling Methods and Procedures 7-1
7.1 Field/On-site Lab Measurements 7-1
7.2 Surface Water, Groundwater, and Process Water Sampling 7-4
7.3 Sample Containers, Preservation, and Storage 7-5
7.4 Sampling Documentation and Shipment 7-6
7.5 Quality Control 7-6

8 References 8-1

Exhibits

2.2-1 Process Water Sample Locations – MW 20 Bench Carbon Amendment System 2-5
5.2-1 Radius of 5-Year Groundwater Travel Time to HNWR-1A 5-5
5.3-1 Process Water Sample Locations—Remedy-produced Water Management System 5-7
5.4-1 Status of Private Water Wells in the Area and Sampling Logistics 5-11
6.3-1 Simplified Data Management Process 6-2
6.5-1 Quarterly Progress Report Template 6-4
7.1-1 Pictures of Telemetry Units Used During Trial 7-3

Tables

2.1-1 Data Quality Objectives
2.1-2 Monitoring Program Wells and Surface Water Sampling Points
2.1-3 Compliance Monitoring Program
2.1-4 Model Predicted Concentration Trends – First Year
2.1-5 Model Predicted Concentration Trends – Five Year Reviews
2.1-6 Monitoring Program Wells and Surface Water Sampling Points for COPC Monitoring
2.2-1 Process Control Monitoring Program Anticipated Concentration Ranges and Timeframes
4.2-1 Process Control Monitoring Program Analytes and Sampling Frequencies
5.2-1 HNWR-1 Analytical Results (November 2010 through January 2013)
5.2-2 HNWR-1 Analytical Results (October 2013 through February 2014)
5.2-3 HNWR-1A Analytical Results (June 2014)
5.2-4 Analytical Suite for Freshwater Supply Well (HNWR-1A) and Extracted River Bank Water Samples
5.2-5 Analytical Suite for MW-55 Cluster Samples
5.3-1 Analytical Suite for Process Control Monitoring – Remedy-produced Water Management
5.4-1 Analytical Suite for Domestic/Private Wells
7.3-1 Sample Containers, Preservation, and Holding Times

Figures

2.1-1 Compliance Monitoring Network
2.1-2 Surface Water Sampling Locations
2.1-3 Proposed Monitoring Wells
2.2-1 Process Control Monitoring Network
2.2-2 NTH IRZ Injection Decision Rules/Operational Framework
2.2-3 Northern NTH IRZ Extraction Rules/Operational Framework
2.2-4 Inner Recirculation Loop Injection Decision Rules/Operational Framework
2.2-5 Inner Recirculation Loop Extraction Decision Rules/Operational Framework
2.2-6 TCS Recirculation Loop Injection Decision Rules/Operational Framework
2.2-7 TCS Recirculation Loop Transwestern Bench Extraction Decision Rules/Operational Framework
2.2-8 TCS Recirculation Loop East Ravine Extraction Decision Rules/Operational Framework
2.2-9 Freshwater Injection System Decision Rules/Operational Framework
2.2-10 Action Levels: Injection of Freshwater and Water Extracted from the River Bank
2.2-11 Protocol for Notification of Confirmed Exceedance of Action Levels
3.1-1 Monitoring Network and Baseline Cr(VI) Distribution, Layer 1
3.1-2 Monitoring Network and Baseline Cr(VI) Distribution, Layer 2
3.1-3 Monitoring Network and Baseline Cr(VI) Distribution, Layer 3
3.1-4 Monitoring Network and Baseline Cr(VI) Distribution, Layer 4
3.1-5 Monitoring Network and 30 Year Manganese Distribution, Layer 1
3.1-6 Monitoring Network and 30 Year Manganese Distribution, Layer 2
3.1-7 Monitoring Network and 30 Year Manganese Distribution, Layer 3
3.1-8 Monitoring Network and 30 Year Manganese Distribution, Layer 4
3.1-9 Monitoring Network and 30 Year Arsenic Distribution, Layer 1
3.1-10 Monitoring Network and 30 Year Arsenic Distribution, Layer 2
3.1-11 Monitoring Network and 30 Year Arsenic Distribution, Layer 3
3.1-12 Monitoring Network and 30 Year Arsenic Distribution, Layer 4
5.1-1 Molybdenum Concentrations in Groundwater, July 1997-December 2013
5.1-2 Selenium Concentrations in Groundwater, July 1997-December 2013
5.1-3 Nitrate Concentrations in Groundwater, July 1997-December 2013
5.1-4 Molybdenum Monitoring Locations
5.1-5 Selenium Monitoring Locations
5.1-6 Nitrate Monitoring Locations
5.1-7 COPC Perimeter Assessment Plan

Appendices

A Standard Operating Procedures for Groundwater, Surface Water, and Process Water Sampling (*On CD-ROM Only*)

- Remedy-SOP-01 – Process Water Sampling
- Remedy-SOP-02 – Safe Fueling and Fuel Handling Policy
- SOP-A1 – Purging and Sampling of Groundwater Monitoring Wells, Well-Volume Method
- SOP-A2 – Purging and Sampling of 1-inch-diameter Groundwater Monitoring Wells, Modified Well-Volume Method
- SOP-A3 – Purging and Sampling of Active and Inactive Water Supply Wells
- SOP-A4 – Depth-Specific Surface Water Sampling (supersedes SOP-A12)
- SOP-A5 – Groundwater Sampling from Sonic Drilling Boreholes
- SOP-A6 – Sample Field Filtration and Preservation for Metals Analyses
- SOP-A7 – Water Level Measurements

- SOP-A8 – Field Water Quality Measurements Using a Flow-through Cell
- SOP-A9 – Calibration of Field Instruments
- SOP-A10 – Decontamination of Water Sampling Equipment
- SOP-A11 – Total Depth Measurements
- SOP-A12 – Field Water Quality Measurements for Grab Samples
- SOP-A13 – Spill Prevention, Containment, and Control Measures for Monitoring Well Sampling
- SOP-A14 – Pore Water Sampling
- SOP-A16 – Access Routes
- SOP-A17 – Groundwater and Surface Water Mobile Integrated Sample Tracking
- SOP-A18 – Purging and Sampling of Groundwater Wells Minimal Drawdown Method
- SOP-A19 – Sampling of Groundwater Monitoring Wells Hydrasleeve No Purge Method
- SOP-A22 – Procedures for Calculation of Freshwater Equivalent Heads
- SOP-A23 – Sample Handling and Custody
- SOP-B16 – Field-Portable X-Ray Fluorescence Soil Sampling
- SOP-C1 – Solinst Pressure Transducers
- SOP-C2 – Pressure Transducer Upload to Topock Database
- SOP-L1 – Hexavalent Chromium Analysis by Hach Method 1560
- SOP-L2 – Ferrous Iron Analysis by Hach Method 8146
- SOP-L3 – Total Chromium Analysis by Hach Method 8024
- SOP-L4 – Conductivity Analysis by Hach Method 8160
- SOP-L8 – Matrix Spike Preparation
- SOP-L9 – pH Measurement
- SOP-L10 – HACH Model 2100P Turbidimeter Calibration and Analysis Procedures
- SOP-L13 – Nitrate Analysis by Hach Method 8171
- SOP-L14 – Sulfate Analysis by Hach Method 8051
- SOP-L15 – Alkalinity Analysis
- SOP-L16 – Total Organic Carbon Analysis by Hach Method 10129
- SOP-L17 – Orthophosphate Analysis by Hach Method 8048
- SOP-L18 – Manganese Analysis by Hach Method 8149
- SOP-L19 – Total Dissolved Solids Analysis

B PG&E Program Quality Assurance Project Plan (*On CD-ROM Only*) and QAPP Addendum

Acronyms and Abbreviations

µg/L	micrograms per liter
ARAR	applicable or relevant and appropriate requirement
ADEQ	Arizona Department of Environmental Quality
AOC	Area of Concern
AutoDV	automated data validation
BOD	Basis of Design
CACA	Corrective Action Consent Agreement
CD	Consent Decree
CFR	Code of Federal Regulations
CoC	chain of custody
COC	chemical of concern
COPC	chemical of potential concern
Cr(III)	trivalent chromium
Cr(T)	total chromium
Cr(VI)	hexavalent chromium
CSM	conceptual site model
DO	dissolved oxygen
DOI	U.S. Department of the Interior
DQO	data quality objective
DTSC	California Department of Toxic Substances Control
EIR	Environmental Impact Report
ELAP	California Environmental Laboratory Accreditation Program
Fe(II)	ferrous iron
Fe(III)	ferric iron
gpm	gallons per minute
HI	hazard index
HNWR	Havasu National Wildlife Refuge
IRL	Inner Recirculation Loop
IRZ	In-situ Reactive Zone
LCS	laboratory control sample
mg/L	milligrams per liter
Mn	manganese
MNA	monitored natural attenuation

MS	matrix spike
MSD	matrix spike duplicate
MWD	Metropolitan Water District
NELAP	National Environmental Laboratory Accreditation Program
NTH	National Trails Highway
O&M	operation and maintenance
OPS	Operating Properly and Successfully
ORP	oxidation reduction potential
P&ID	piping and instrumentation diagram
PAP	Perimeter Assessment Plan
PG&E	Pacific Gas and Electric Company
ppb	parts per billion
QA	quality assurance
QAPP	Quality Assurance Project Plan
QC	quality control
RAOs	Remedial Action Objectives
RD/RA	Remedial Design/Remedial Action
ROD	Record of Decision
RTC	Response to Comment
S(II-)	sulfide
SOP	Standard Operating Procedure
SWMU	Solid Waste Management Unit
SWRCB	State Water Resources Control Board
TCS	Topock Compressor Station
TDS	total dissolved solids
TOC	total organic carbon
TSS	total suspended solids
TWG	Technical Working Group
UNLV	University of Las Vegas
USC	United States Code
USEPA	U.S. Environmental Protection Agency
USGS	United States Geological Survey

SECTION 1

Introduction

This Sampling and Monitoring Plan is Volume 2 of the Operation and Maintenance (O&M) Manual for the final groundwater remedy at the Pacific Gas and Electric Company (PG&E) Topock Compressor Station (TCS). This Plan is intended to satisfy the requirements under the Remedial Design/Remedial Action (RD/RA) Consent Decree (CD; DOI 2013) Stipulation 12(f)(5) and Appendix C Section 2.2.3(5); Corrective Action Consent Agreement (CACA; DTSC 1996) Attachment 6, Section B(9); Environmental Impact Report (EIR; DTSC 2011b) mitigation measure HYDRO-1; and Record of Decision (ROD; DOI 2010) applicable or relevant and appropriate requirements (ARARs) #81-82, #91-94, and 99 through 101.

In a coordinated effort, the United States Department of the Interior (DOI) and the California Department of Toxic Substance Control (DTSC) selected the final groundwater remedy to address chromium in groundwater resulting from discharges to Solid Waste Management Unit (SWMU) 1/Area of Concern (AOC) 1 and within AOC 10 (DOI 2010 and DTSC 2011a). When the selected final groundwater remedy is implemented, the current groundwater monitoring programs will be replaced by a new Corrective Measure/Remedial Action Monitoring Program with the focus of evaluating the performance of the remedy to attain the remedial action objectives (RAOs) and to comply with ARARs. The monitoring program will have several components: compliance monitoring, process control monitoring, and constituents of potential concern (COPCs) monitoring. These different monitoring program components will be used to evaluate remedy effectiveness and implementation, and to monitor contaminants in groundwater over time. Monitoring will also be used to ensure that the groundwater contaminant plume does not permanently expand or adversely impact potential receptors.

1.1 Compliance Monitoring During Remedy Implementation

The RAOs for the groundwater remedy are:

1. Prevent ingestion of groundwater as a potable water source having hexavalent chromium (Cr[VI]) in excess of the regional background concentration of 32 micrograms per liter (µg/L).
2. Prevent or minimize migration of total dissolved chromium (Cr[T]) and Cr(VI) in groundwater to ensure concentrations in surface water do not exceed water quality standards that support the designated beneficial uses of the Colorado River (11 µg/L Cr[VI]).
3. Reduce the mass of Cr(T) and Cr(VI) in groundwater at the site to achieve compliance with ARARs in groundwater. This RAO will be achieved through cleanup goal of regional background of 32 µg/L of Cr(VI).
4. Ensure that the geographic location of the target remediation area does not permanently expand following completion of the remedial action.

Compliance monitoring will focus on evaluating the groundwater remedy with regard to these RAOs. RAO 1, relating to prevention of ingestion of contaminated groundwater, will be met primarily through institutional controls. The Compliance Monitoring Program is designed to assess the groundwater remedy with regard to RAOs 2, 3, and 4, related to controlling migration and reducing mass to an adequate degree.

1.2 Process Control Monitoring During Remedy Implementation

Process control monitoring is conducted to assess the extent that the groundwater remedy is functioning as designed. The Process Control Monitoring Program will focus on issues such as assessing carbon dosing to maintain an effective In-situ Reactive Zone (IRZ), and the generation and attenuation of in-situ by-products.

In addition, water level monitoring will be conducted to assess the adequacy of hydraulic control measures. Although hydraulic control is not an RAO in itself, maintaining sufficient hydraulic influence in certain areas, such as the freshwater injection barrier and the East Ravine Extraction Wells, will enhance plume control and plume remediation.

In above-ground support systems, process control monitoring involves sampling from pipes and tanks to monitor changes in water quality for extracted water that will be treated, amended and/or re-injected and to monitor the effectiveness of the carbon amendment system.

1.2.1 Summary of In Situ Remediation Chemistry

IRZ components of the design involve biologically-mediated treatment of Cr(VI). This section summarizes the in situ processes and chemical reactions within and downgradient of the IRZ that form the basis for the monitoring requirements of this system.

IRZ treatment is achieved through the stimulation of native microorganisms by the delivery of a degradable source of organic carbon, providing an electron donor for microbial growth. The goal of this process is to provide a sufficient quantity of electron donor to overcome the aquifer's supply of aerobic electron acceptors (primarily oxygen and nitrate) so that Cr(VI) will be reduced by microbes (i.e., used as an electron acceptor) to its trivalent form (Cr[III]). Cr(VI) is relatively soluble (present in solution at neutral pH as the chromate anion, CrO_4^{2-}); whereas Cr (III) is relatively insoluble and precipitates out of solution as Cr(III)-hydroxide and mixed metal-hydroxide phases.

The utilization of electron acceptors in the system will generally be governed by the principles of thermodynamic equilibrium and redox kinetics. Dissolved oxygen (DO) and nitrate are thermodynamically more favorable electron acceptors than Cr(VI), while Cr(VI) is thermodynamically a more favorable electron acceptor than manganese oxides, iron oxides, and sulfate. However, given the relative availability of the electron acceptors and spatial heterogeneities of the subsurface aquifer environment, many of these reactions can occur simultaneously under field conditions. For example, iron and manganese reduction can proceed concurrently and sulfate reduction can begin before iron oxides are depleted, depending on the strength of the reducing environment. The strength of the reducing environment can be tuned by adjusting the concentration of organic carbon injected. This can help minimize the reduction of manganese, iron, and sulfate while still achieving adequate Cr(VI) reduction and removal. However, in order to create a reducing environment sufficient for the sustained removal of Cr(VI), some manganese, iron, and sulfate reduction will occur. Some iron reduction is actually desirable, as it provides stored Cr(VI) reduction capacity within the aquifer. These principles are discussed in more detail in Appendix B of the Basis of Design Report/Final (100%) Design Submittal (the Final BOD) to which this O&M Manual is Appendix L.

The oxidation-reduction (redox) reactions fostered in the IRZ may temporarily mobilize certain naturally-occurring metals within the treatment zone, including iron, manganese, arsenic, and barium. Reduction of insoluble manganese(III/IV)-oxides generates manganese(II), which is soluble. Similarly, reduction of iron(III)-oxides releases ferrous iron (Fe[II]), which in the process releases arsenic that was adsorbed and coprecipitated within the iron oxides. Barium, which may be largely present in the soil as barite ($BaSO_4$), can be released during sulfate reduction. Although the release of manganese, arsenic, and iron will be unavoidable, the system will be operated to limit sulfate reduction, which will substantially limit—and likely avoid—the release of barium. The concentrations of these by-products will attenuate downgradient of the treatment zone through various reactions, including sorption, reoxidation, and precipitation/coprecipitation, as discussed in more detail in Appendix B of the Final BOD.

Monitoring will be performed to assess the performance of the treatment remedy. Total organic carbon (TOC), Cr(VI), DO, nitrate, and sulfate will be monitored within the treatment zone to assess the effectiveness of organic carbon distribution. The concentrations of by-products (manganese, iron, arsenic, and barium) will also be monitored within, and downgradient of, the treatment zone to assess by-product generation and attenuation.

1.2.2 Adaptive Operations Approach

In the field, variations in Cr(VI) concentration distributions, lithology and hydrogeology will be encountered. To deal with the uncertainty in these parameters in implementation, the remedial system was designed to be flexible and the remedy will be implemented with an adaptive operational strategy. During system installation and baseline sampling, additional data will be collected that will refine the current conceptual model. Where appropriate, the data may be used to refine the design, for example, depth and length of remedial well screens

and perhaps locations. The data will also be used to update the groundwater flow and solute transport model (see Appendix B of the Final BOD, Section 12) and refine remedy projections, as needed. Model updates are planned to be conducted approximately annually during start-up and during five-year reviews thereafter. During remedy implementation, monitoring data will be collected and used to guide the operations of the system, including changes in operational flowrates, injection parameters, and potentially remediation well locations. Additional monitoring well locations may also be needed as data are collected during remedy construction and implementation. This monitoring program provides a plan for data collection, interpretation, and guidance for adapting operations as the remedy is implemented.

1.2.3 Short-Term Goals—Operating Properly and Successfully and Five-Year Reviews

In addition to the RAOs, short-term goals and criteria are being developed in coordination with DTSC and DOI to facilitate future evaluations of remedy performance, including assessments of whether the remedy is Operating Properly and Successfully (OPS). In addition to the RAOs for the project listed in Section 1.1, this Sampling and Monitoring Plan details explicit, discrete, and measurable goals and metrics that will be incorporated into the evaluation of whether the remedy is OPS. OPS is defined as:

1. The remedy is operating as designed;
2. The information obtained from remedy operation indicates that the remedy is protective of human health and the environment; and
3. The remedy is likely to be able to achieve the cleanup levels or performance goals delineated in the DTSC Statement of Basis (DTSC 2011a) and the DOI ROD (DOI 2010) for the groundwater remedy at the PG&E Topock site.

In general, OPS determination is expected within 1 to 2 years of remedy start-up. Some components of the system, for instance the National Trails Highway (NTH) In-situ Reactive Zone (IRZ), may be determined to be OPS earlier. Five-Year Reviews will also be conducted by DTSC and DOI to assess remedy performance. The short-term metrics and criteria provided throughout this volume and also summarized in Table 2.1-5 in Section 2 will be appropriate metrics for evaluating remedy performance for Five-Year Reviews.

SECTION 2

Monitoring Goals and Data Quality Objectives

The Compliance Monitoring Program and Process Control Monitoring Program are described in more depth in this section. The monitoring goals and data quality objectives (DQOs) for the remedy establish the process elements and decision points that will be considered during remedy implementation. These objectives guide data collection to assess operations of the remedial components and to optimize the remedial performance. This monitoring plan establishes the following components for each of the DQOs, as summarized in Table 2.1-1 (tables are located at the end of each section):

- Problem statements and decision statements (Section 2)
- Inputs to the decisions and study area boundaries (Sections 3 and 4)
- Decision rules (Section 2)
- Limits of decision errors and optimization of design for data collection (Sections 3 and 4)

For the remedy, the decision rules are effectively an adaptive operations framework that outlines how the data collected will be used to make operational adjustments. The DQOs and decision rules/operations framework dovetail with the Contingency Plan, presented in Volume 3 of this Operation and Maintenance (O&M) Manual. The Contingency Plan includes a failure modes analysis that anticipates potential operational issues that may occur with the remedy. The DQOs guide the adaptive operations elements to mitigate for these operational issues. Mitigations identified in the failure modes analysis that are not covered by design or adaptive operations may require additional contingency actions, as outlined in the plan.

Data from the monitoring programs will be received on a schedule indicated by the initial monitoring frequency outlined in Table 2.1-2. These data will be interpreted as they are received to inform any potential modifications to system operations. The sampling program will be re-evaluated after two years of operation, or two years following the OPS determination. If warranted, the sampling program may be re-evaluated sooner based on knowledge gained as the remedy is operated. Proposed changes to the monitoring program will be communicated as recommendations provided in quarterly progress reports, in accordance with the anticipated reporting procedures and schedules described in Section 6.5 and Exhibit 6.5-1.

2.1 Remedy Compliance Monitoring Program

The goal of the Compliance Monitoring Program will be to assess the operation of the remedy with regard to RAOs 2, 3, and 4. The program will involve periodic monitoring of groundwater collected from within and outside of the Cr(VI) plume (see Figure 2.1-1; figures are located at the end of each section) and from surface water sampling locations along the Colorado River (Figure 2.1-2). New monitoring well locations are being proposed to supplement the existing network and are highlighted on Figure 2.1-3. The RAOs and DQOs for compliance monitoring are described in detail below and summarized in Table 2.1-1. Note that RAO 1, which involves prevention of the ingestion of water with elevated Cr(VI), requires no action within the Compliance Monitoring Program described here, since the proper institutional controls will be used to meet this RAO.

Compliance DQO-1 (RAO 2) Problem Statement: Prevent or minimize migration of Cr(T) and Cr(VI) in groundwater to ensure concentrations in surface water do not exceed water quality standards that support the designated beneficial uses of the Colorado River (11 µg/L Cr[VI]).

RAO 2 will be satisfied during remedy operation by the in-situ treatment of Cr(VI) in groundwater; the treatment will minimize and prevent Cr(VI) and Cr(T) from reaching the Colorado River. The problem statement for this DQO is to implement the remedy in compliance with RAO 2 (Table 2.1-1). As the remedy is implemented, data will be collected under this DQO to answer the question, should operations or remedy components be modified to meet the RAO? To answer this question, surface water sampling will be conducted within the study area using the surface water sampling network. The surface water sampling locations define the study area boundaries and are shown on Figure 2.1-2 and listed in Table 2.1-2. As part of the Compliance Monitoring Program, surface water

samples will be collected periodically from the Colorado River from multiple locations upstream, midstream, and downstream of the zone where treated groundwater discharges to the river (see Section 3.1).

During initial start-up of the NTH IRZ, prior to operation of the River Bank Extraction Wells, Cr(VI) in the floodplain downgradient of the NTH IRZ will not be treated. Modeling results indicate that operations of the NTH IRZ during this period are protective of the Colorado River—i.e., the Cr(VI) plume does not migrate a significant distance in the floodplain during start-up, and the portion of the plume located downgradient of the NTH IRZ does not migrate past the capture zone of the River Bank Extraction Wells (see Appendix B of the Final BOD). To verify these predictions, quarterly sampling of the NTH IRZ downgradient monitoring well network and the surface water sampling locations will be conducted, as indicated on Table 2.1-2.

Although RAO 2 is specifically intended to address Cr(VI), the IRZ by-products arsenic and manganese will also be monitored. The surface water quality criteria for Cr(VI) is 11 µg/L and 150 µg/L for arsenic (Source: Table 2 of the ROD, ARAR #3, Federal Water Pollution Control Act. 33 USC 1251-1387, 40 CFR 131.38). There are no surface water quality criteria for Cr(T) and manganese. In general, determination of whether the Topock site is acting as a source of elevated Cr(VI), manganese, or arsenic in surface water will be made through the comparison of upstream sampling results with midstream and downstream sampling results, supported by floodplain groundwater sampling results. Elevated concentrations of Cr(VI), manganese, and arsenic can be potentially attributed to the Topock site if midstream and/or downstream surface water concentrations show statistically significant increases above upstream concentrations observed during the same sampling event. Decision error will be limited through collection of samples upriver and downriver of potentially affected areas to accurately attribute concentration changes to the Topock site and performing quarterly to semi-annual data collection throughout the lifetime of the remedy operations (analytes and frequencies specified in Section 3.2 and Table 2.1-3).

The surface water data will be used to evaluate the following decision rules:

- If Cr(VI), arsenic, or manganese concentrations increase in surface water samples, or are detected at locations that were previously non-detect, and are attributable to the Topock site, operational changes will be implemented per the process control decision rules outlined in Section 2.2 and presented in Figures 2.2-3, 2.2-5, and 2.2-8.
- If Cr(VI), arsenic, or manganese concentrations do not return to baseline as a result of the operational adjustments, the recommendations in the Contingency Plan measures (see Volume 3) will be implemented.

Compliance DQO-2 (RAO 3) Problem Statement: Reduce the mass of Cr(T) and Cr(VI) in groundwater at the site to achieve compliance with ARARs in groundwater. This RAO will be achieved through cleanup goal of regional background of 32 µg/L of Cr(VI).

The problem statement for this DQO is to implement the remedy in compliance with RAO 3 (Table 2.1-1). As the remedy is implemented, data will be collected under this DQO to answer the question, should operations or remedy components be modified to meet the RAO? As inputs to this decision, groundwater samples will be collected periodically from the compliance monitoring program well network inside the plume (the network is described in Section 3), which is the study area for this DQO. The compliance monitoring wells inside the plume are shown on Figure 2.1-1 and listed in Table 2.1-3 according to their intended function within the monitoring program.

As part of the data quality objectives for RAO 3, wells located within the plume boundary (defined by the current 32 µg/L Cr[VI] plume boundary) will be monitored for Cr(VI), and concentration trends will be reviewed to assess progress toward this RAO per the process outlined in IRL-DQO 1 in Section 2.2.2 and Freshwater DQO-1 in Section 2.2.4. Tables 2.1-4 and 2.1-5 include anticipated Cr(VI) concentration trends toward treatment to less than 32 µg/L for wells located within the plume boundary. As the remedy progresses, if the observed concentration trends are not consistent with anticipated Cr(VI) attenuation timeframes (i.e., if the monitoring results indicate that Cr[VI] attenuation is actually taking substantially longer than anticipated), then operational changes to the remediation system will be evaluated and implemented as presented in the process control decision rules/operational framework described in Section 2.2 and presented in Figures 2.2-2 through 2.2-9. If operational

adjustments are not successful in improving system performance, the Contingency Plan will be implemented as described in Volume 3 of this O&M Manual. Decision error will be limited by collecting monitoring data at multiple points distributed laterally and vertically across the plume (Figure 2.1-1), spanning a range in anticipated cleanup timeframes (Tables 2.1-3, 2.1-4 and 2.1-5). In addition, decision error will be limited by monitoring at a frequency consistent with anticipated cleanup timeframes.

Data will also be evaluated to determine when the appropriate time for monitored natural attenuation (MNA) arises. Per the Statement of Basis (DTSC 2011a) and ROD (DOI 2010), MNA is included as a long-term component of the groundwater remedy to address residual Cr(VI) that may remain in recalcitrant portions of the aquifer following in-situ treatment with flushing. Decisions on specific areas of the plume appropriate for MNA will be made based on: data collected under this DQO evaluating effectiveness of the active remediation systems for mass removal; the types and options for active remediation system adjustments; and the location of proposed MNA areas relative to natural reductive zones in the aquifer. Decision error will be limited by collecting monitoring data at multiple points distributed laterally and vertically across the plume, spanning a range in anticipated cleanup timeframes as detailed in Tables 2.1-3, 2.1-4, and 2.1-5. In addition, decision error will be limited by monitoring at a frequency consistent with anticipated cleanup timeframes as detailed in Tables 2.1-3, 2.1-4, and 2.1-5.

Compliance DQO-3 (RAO 4) Problem Statement: Ensure that the geographic location of the target remediation area does not permanently expand following completion of the remedial action.

The problem statement for this DQO is to implement the remedy in compliance with RAO 4 (Table 2.1-1). As the remedy is implemented, data will be collected under this DQO to answer the question, should operations or remedy components be modified to meet the RAO? As inputs to this decision, groundwater samples will be collected periodically from the Compliance Monitoring Program well network outside the plume, according to the DQO for this RAO, as described in Section 3. The compliance monitoring wells outside the plume in the study area for this DQO are shown on Figure 2.1-1 and listed in Table 2.1-3. The data collected will be analyzed to ensure that the concentrations of Cr(VI) and remedy by-products, specifically manganese and arsenic, do not permanently increase outside of the baseline Cr(VI) plume. Monitoring for COPCs will also be conducted as described in Section 5.1 and summarized in Table 2.1-6. If needed, tracer studies comprised of injection into TCS injection wells could also be used to verify that TCS injection is not resulting in expansion of the Cr(VI) plume.

Upgradient of the plume, if concentrations of Cr(VI), manganese, or arsenic increase above anticipated concentrations, operational adjustments for the Inner Recirculation Loop (IRL) injections and freshwater injections will be considered and groundwater modeling will be used to assess effects of the considered operational changes, as outlined in Figures 2.2-4 and 2.2-9. Based on the modeling assessment, the need for additional data collection and the benefits and timing of the operational adjustments will be reviewed and changes presented and implemented if warranted. The Process Control Monitoring Program and decision rules/operational framework are outlined in Sections 2.2.2 and 2.2.4, Figures 2.2-4 and 2.2-9. If operational adjustments are implemented, the effects will be assessed in the context of the overall plume remediation using the field data and re-calibrated groundwater modeling projections (see Appendix B of the Final BOD, Section 12). Model updates are planned to be conducted approximately annually during start-up and during five-year reviews thereafter.

If Cr(VI) concentrations show an increasing trend downgradient of the NTH IRZ compliance wells located outside of the baseline Cr(VI) plume in the floodplain, operational adjustments will be considered as outlined in Section 2.2.1, Figure 2.2-2 and in the Contingency Plan. Similarly, if by-product concentrations increase beyond expectations downgradient of the NTH IRZ in compliance wells located outside of the baseline Cr(VI) plume in the floodplain, operational adjustments will be considered as outlined in Section 2.2.1.

Decision errors will be limited through:

- Collection of samples from outside of the baseline hexavalent chromium plume (Table 2.1-3 and Figure 2.1-1).
- Sampling at a frequency based on the anticipated arrival time of water affected by various components of the remedy (Tables 2.1-3, 2.1-4, and 2.1-5)

- Quarterly collection of manual water level data and continuous collection of pressure transducer data to assess hydraulic performance, ensuring plume control (Table 2.1-3).
- Comparison of Cr(VI) and by-products dynamics with solute transport model predictions to assess performance.

2.2 Process Control Monitoring Program

The objective of the Process Control Monitoring Program will be to assess the extent to which the groundwater remedy is functioning as designed based on the DQOs. The process control monitoring network is shown on Figure 2.2-1.

2.2.1 National Trails Highway In-situ Reactive Zone (NTH IRZ)

NTH IRZ DQO-1 Problem Statement: The carbon substrate amendment system must be working to amend the organic carbon substrate into the recirculated groundwater.

The decision statement for this DQO is: is the carbon amendment system working properly? As inputs to this decision, samples will be collected from the MW-20 Bench distribution system and analyzed for TOC. The study area is the carbon distribution system. Samples will be collected from sampling ports located in each forcemain following the location where organic carbon substrate is added and passes through a static mixer (Exhibit 2.2-1; see also Section 4.2.8). Samples will also be collected from injection vaults (Exhibit 2.2-1), as needed. If TOC concentrations do not match the target mixing concentrations for a given injection, troubleshooting will be conducted to identify and repair any problems with the carbon amendment system.

During system start-up, samples will be collected frequently, approximately weekly or biweekly, until data suggest that the amendment system is working properly. Once the system operations are verified, sampling frequency will be reduced to quarterly or semi-annually. If semi-annual monitoring is proposed, sampling events may be performed on a quarterly basis with half of the injection vaults sampled on alternating quarters. This would ensure that information on the system is collected quarterly, even if any given injection vault would only require semi-annual sampling. Frequent collection during start up at key system locations will limit decision error.

NTH IRZ DQO-2 Problem Statement: The NTH IRZ must be complete and maintain Cr(VI) treatment over time.

The decision statements for this DQO are (Table 2.1-1):

- Should operations of the NTH IRZ be modified?
- Should NTH IRZ recirculation and organic carbon injections be started or stopped?
- Should the NTH IRZ design be modified?
- Should the monitoring well layout be modified?

The decision rules/operational framework for the NTH IRZ is shown on Figure 2.2-2. Operation of the NTH IRZ will involve extraction of groundwater from NTH IRZ Extraction Wells, amendment with organic carbon substrate, and re-injection into NTH IRZ Injection Wells to generate an IRZ to treat Cr(VI). DQO-2 for the NTH IRZ is to ensure that the IRZ has been sufficiently established in the subsurface as a result of the IRZ system operations.

As inputs to the decisions listed above, monitoring data from dose response wells, located in proximity to the NTH IRZ Injection Wells in the study area, will be collected. The dose response wells are shown on Figure 2.2-1 and identified on Table 2.1-2. The details of the sampling program for these wells are presented in Section 4.2.1 and summarized in Table 4.2-1 at the end of Section 4. It is important to note that, although Cr(VI) concentrations will be used as a line of evidence for establishment of a treatment zone, decreases in dissolved Cr(VI) alone in the short-term are not necessarily a definitive metric for treatment. Multiple lines of evidence will be used to evaluate the establishment of the treatment zone, including the following:

- TOC: The distribution of TOC is the primary mode of generating reducing conditions for treatment of Cr(VI) in groundwater.

CITY:(Reqd) DIV/GROUP:(Reqd) DB:(Reqd) LD:(Opt) PIC:(Opt) PM:(Reqd) TM:(Opt) LYR:(Opt)ON=*;OFF=*REF*
G:\Graphics\ARITOPOCK-01\Submittal_100%\DWGs\BOD\PFDexhibits.dwg LAYOUT: 2.2-1 SAVED: 10/12/2015 4:40 PM ACADVER: 19.0S (LMS TECH) PAGESETUP: ---- PLOTSTYLETABLE: ACAD.CTB PLOTTED: 10/21/2015 9:21 AM BY: ANDY WOTTRICH
XREFS: IMAGES: PROJECTNAME: ----
logo v2.jpg

LIMITS OF IRZ CARBON AMENDMENT BUILDING

LIMITS OF IRZ CARBON AMENDMENT BUILDING

LIMITS OF IRZ CARBON AMENDMENT BUILDING

LIMITS OF IRZ CARBON AMENDMENT ROOM

401
CARBON SUBSTRATE
(BULK DELIVERY)

T-*0601
CARBON SUBSTRATE TANK

PMP-*0640
CARBON SUBSTRATE PUMP

PMP-*0641
CARBON SUBSTRATE PUMP

PMP-*0642
CARBON SUBSTRATE PUMP

402
403
404
405

STATIC MIXERS
M-*0605
M-*0606
M-*0607

201
202
203

SINGLE SCREEN
INJECTION WELL
(TYP. FOR XX = 01 TO 04)

INNER RECIRCULATION LOOP

G-04-01 102
NORTHERN NTH IRZ
EXTRACTION WELL
NETWORK HEADER

G-04-01 103
IRZ-23 EXTRACTION
WELL NETWORK HEADER

G-05-01 101
RIVER BANK EXTRACTION
WELL NETWORK HEADER

G-03-01 104
TCS EXTRACTION
WELL NETWORK HEADER

STATIC MIXER
M-*0608

204

LIMITS OF IRZ CARBON AMENDMENT BUILDING

SINGLE SCREEN
INJECTION WELL
(TYP. FOR XX = 34 TO 39)

DUAL SCREEN
INJECTION WELL
(TYP. FOR XX = 24 TO 33)

SOUTH NTH IRZ
INJECTION WELL NETWORK

DUAL-SCREEN INJECTION
WELL CLUSTER
(TYP. FOR XX = 02 TO 04, 06 TO 08, 10 TO 22)

NORTH NTH IRZ INJECTION WELL NETWORK

TCS-1 TCS-2

TCS INJECTION WELL NETWORK

LEGEND:
- (S) SAMPLE PORT LOCATION
- S CARBON AMENDMENT SAMPLE COLLECTION LOCATION

NOTE:
TAG NUMBER " * " IS A PLACEHOLDER FOR THE STATION SCADA ID ("IRZ00-" FOR THE IRZ CARBON AMENDMENT BUILDING).

PACIFIC GAS AND ELECTRIC COMPANY
NEEDLES, CALIFORNIA
OPERATION AND MAINTENANCE MANUAL
VOLUME 2: SAMPLING AND ANALYSIS PLAN

PROCESS WATER SAMPLE LOCATIONS-MW20 BENCH CARBON AMENDMENT SYSTEM

ARCADIS Design & Consultancy for natural and built assets

EXHIBIT
2.2-1

- Dissolved iron: Dissolved iron is a Cr(VI) reductant that is generated under iron reducing conditions stimulated by the injection of organic carbon. If dissolved iron is distributed in the aquifer where TOC is not, Cr(VI) reducing conditions will still be established. As such, dissolved iron serves as a secondary indicator of the establishment of an IRZ.
- Cr(VI): the presence or absence of Cr(VI) in groundwater will also serve as a direct indicator of whether Cr(VI) treatment at a given location is occurring or necessary.

The process for evaluating the data collected from the monitoring wells and making operational adjustments according to the decision rules/operational framework is presented in a flowchart on Figure 2.2-2. As detailed on Figure 2.2-2, a combination of TOC, dissolved iron, and Cr(VI) data from dose response monitoring wells will be evaluated to determine if the IRZ has been established. TOC concentrations will be compared to the target concentration range established based on experience, pilot testing results, and solute transport modeling, provided in Table 2.2-1. The anticipated concentrations vary with distance from injection points, with higher concentrations anticipated close to injection points and lower concentrations anticipated further from injection points. If TOC concentrations are within the anticipated range, then operations will continue. If TOC concentrations are below the anticipated range, Cr(VI) and dissolved iron data will also be evaluated. If dissolved iron is above baseline and Cr(VI) is treated to less than 32 parts per billion (ppb), then the IRZ operation will be considered successful. If TOC concentrations are below the anticipated range, dissolved iron does not increase above baseline, and Cr(VI) is not treated, operational adjustments will be considered, as shown on Figure 2.2-2.

In addition, downgradient Cr(VI) concentrations (see also Section 4.2.2) will be evaluated as shown on Figure 2.2-2. The monitoring wells downgradient of the NTH IRZ, which define the study area boundaries, are shown on Figure 2.2-1 and identified on Table 2.1-2. The details of the sampling program for these wells are presented in Section 4.2.2 and summarized on Table 4.2-1. If Cr(VI) concentrations are not decreasing within expectations as outlined in Tables 2.1-4 and 2.1-5, then operational adjustments will be considered as shown on Figure 2.2-2. Table 2.2-1 includes anticipated timeframes for decrease of Cr(VI) to below 32 µg/L at monitoring wells downgradient of the NTH IRZ based on the results of solute transport modeling. Tables 2.1-4 and 2.1-5 provide additional information on anticipated Cr(VI) concentration trends at specific monitoring locations.

Short-term operational adjustments that may be made to improve TOC distribution and establishment of the IRZ include adjustment of the TOC injection concentration, dosing frequency or duration, injection and extraction rates, target injection intervals, or river bank extraction rates. Increasing the injection concentration and adjusting the dosing parameters would be implemented if data indicate that injected water is reaching the location, but there is not sufficient carbon remaining in solution to establish Cr(VI)-reducing conditions. A decrease in nitrate without increase in TOC or dissolved iron is an indication of this case. If injected water is not reaching the monitoring location as indicated by a lack of change in Cr(VI), nitrate and dissolved metals, an increase in flow rate could be used to improve distribution. The targeted treatment intervals may need to be adjusted if it appears that some intervals within a given injection location require more reagent distribution than others or if some intervals are already completely treated while others are not. River bank extraction rates may be adjusted if the hydraulic gradient being induced downgradient of the IRZ is preventing lateral distribution at the injection points. Adjustments to the river bank extraction rates would have to be balanced with the evaluation of the extraction for performance, as outlined in Section 2.2.2.

If short-term operational adjustments are not sufficient to improve the performance of the NTH IRZ, long-term operational changes such as adding the provisional injection wells and changing reagents will be considered (see Boxes 13 and 14 of Figure 2.2-2). The addition of provisional injection wells would decrease the required TOC injection concentration to achieve complete distribution. Selection of a carbon substrate with slower degradation rates (e.g., whey or molasses) could increase the distribution distances. If long-term operational changes are not sufficient to improve the performance of the NTH IRZ, further contingency measures will be implemented (see Contingency Plan in Volume 3).

It is anticipated that the IRZ operations will be cycled; for example the IRZ would be operated for six months to establish reducing conditions and then will be turned off for 18 months during which time residual reducing

capacity generated during injections will continue to treat Cr(VI) in groundwater. The decision process for turning the IRZ operations on and off is illustrated starting on Box 27 of Figure 2.2-2. Residual reducing capacity could potentially be stored during injections as reduced iron from iron reduction, sulfide from sulfate reduction, or as biomass from microbial growth. For dose response wells, dissolved iron concentrations, Cr(VI) concentrations below 32 μg/L, and other redox indicators such as nitrate and sulfate will be used to evaluate the establishment and maintenance of an adequate reducing capacity within the treatment zone. If these parameters collected from dose response wells indicate reducing conditions have been established, IRZ operations will be shut down and monitoring of these parameters will continue. As the data indicate that reducing conditions are lost, e.g., through a decrease in dissolved iron concentrations, an increase in Cr(VI) concentrations, or an increase in other redox indicators such as nitrate, the IRZ operations will be resumed. The monitoring data will provide information all along the IRZ, and it is possible that treatment may be complete and operations will be shut down in some areas, while additional treatment and operation will be needed in other areas.

Decision error will be limited through:

- Placement of monitoring locations at the weaker points of the IRZ (mid-point between injection locations) and downgradient (Sections 4.2.1 and 4.2.2, Figure 2.2-1, Table 2.1-2)
- Collection of a variety of parameters to evaluate establishment of hexavalent chromium reducing conditions (Table 4.2-1 in Section 4)
- Monthly to quarterly sampling during start-up and operational changes (Table 4.2-1)

NTH IRZ DQO-3 Problem Statement: By-product generation and migration from the NTH IRZ must be controlled.

The decision statements for this DQO are:

- Should operations of the NTH IRZ be modified based on by-product concentration trends?
- Should design of the NTH IRZ design be modified based on by-product concentration trends?

The decision rules/operational framework for the NTH IRZ by-product evaluation is also shown on Figure 2.2-2. DQO-3 for the NTH IRZ is to ensure that by-product generation from the NTH IRZ is adequately controlled. Inputs to these decisions are monitoring data from dose response wells to evaluate the generation of by-products within the IRZ (see also Section 4.2.1) and data from monitoring wells located downgradient of the IRZ in the mid-floodplain and monitoring wells located proximal to the river bank extraction system to monitor by-product attenuation and migration in the study area (see also Sections 4.2.2 and 4.2.3). By-product data collection will include sampling for dissolved arsenic, dissolved manganese, dissolved iron, and dissolved barium, as detailed in Section 4.

By-product concentration data will be compared to the anticipated concentration range and timing based on solute transport modeling as presented in Table 2.2-1. If by-product concentrations are above the anticipated range, operational adjustments will be made as discussed in the next paragraph. The maximum anticipated concentrations listed in Table 2.2-1 for NTH IRZ downgradient monitoring wells and River bank extraction monitoring wells will also be used as by-product action levels. The decision flowchart outlining agency notification requirements should action levels be exceeded is provided as Figure 2.2-11. If the constituent is detected in samples above the action level, the sample will be reanalyzed if within holding time. If the holding time has been exceeded, a new sample will be collected and re-analyzed within 45 days. If the re-sample confirms the exceedance, the DTSC will be notified and operational adjustments will be made as discussed in the next paragraph.

Short-term operational adjustments that may be made to improve by-product generation and migration include adjustment of the TOC injection concentration, dosing frequency or duration, injection and extraction rates, target injection intervals, or river bank extraction rates. Decreasing the injection TOC concentration and adjusting the dosing parameters could decrease the generation of the by-products. Adjustments to the TOC injections to minimize by-product generation would have to be balanced with maintaining Cr(VI) treatment, as outlined in NTH IRZ DQO-2. River bank extraction rates may be adjusted if the hydraulic gradient downgradient being induced is

having detrimental influence on downgradient by-product migration. Adjustments to the river bank extraction rates would have to be balanced with the evaluation of the extraction for performance, as outlined in Section 2.2.2.

If short-term operational adjustments are not sufficient to improve by-product generation and migration from the NTH IRZ, long-term operational changes such as adding the provisional injection wells will be considered (see Box 14 of Figure 2.2-2). The addition of provisional injection wells would decrease the required TOC injection concentrations and decrease by-product generation.

If short-term and long-term operational adjustments are not sufficient to improve by-product generation and migration from the NTH IRZ, the river bank extraction system operation may be adjusted to ensure that by-products do not cause unacceptable impacts to the river, as indicated in Box 17 on the operational flowchart in Figure 2.2-2. The DQOs to evaluate operation of the river bank extraction system are presented in Section 2.2.2.

Decision errors will be limited by:

- Placement of monitoring wells at a variety of locations lateral and downgradient of injection wells (Sections 4.2.1 and 4.2.2, Figure 2.2-1, Table 2.1-2)
- Sampling frequency which ensures observation of concentration changes, based on anticipated timeframe for concentration changes (Tables 2.1-4, 2.1-5, and 4.2-1)

NTH IRZ DQO-4 Problem Statement: Extraction on the north end of the NTH IRZ will be conducted to control Cr(VI) with the NTH and river bank extraction systems.

The decision statement for this DQO is: Should extraction operations be modified to control hexavalent chromium migration on the north end of the NTH IRZ? The decision rules/operational framework for the NTH northern extraction is shown on Figure 2.2-3. On the northern end of the NTH IRZ, potential migration of Cr(VI) in groundwater will be controlled via extraction, rather than the establishment of an IRZ. As inputs to the decision, data will be collected on this end of the IRZ, the study area, to assess the ability of extraction to control Cr(VI) migration. This objective will be assessed through evaluation of data collected from northern NTH IRZ extraction monitoring wells (see also Section 4.2.3), the extraction wells themselves (see also Section 4.2.5), and the surface water sampling locations (see also Section 3.1). The monitoring well and surface water sampling locations are listed on Table 2.1-2 and shown on Figures 2.2-1 and 2.1-2, and the sampling programs are detailed in Sections 3 and 4.

The analytical and water level data collected will be used to adjust the flow model per the model update schedule, and a lines-of-evidence approach will be used to evaluate the hydraulic control of the Cr(VI) plume, as discussed in further detail in Section 4.3. Model updates are planned to be conducted approximately annually during start-up and during five-year reviews thereafter. The river bank extraction system operation will also be evaluated and adjusted to address control of the Cr(VI) plume. If it is assessed that control is not likely to be achieved, operational adjustments to the extraction rates of the northern NTH IRZ extraction wells or River Bank Extraction Wells will be considered, as detailed in the decision rules on Figure 2.2-3 (Box 5). If short-term operational adjustments do not adequately enhance the likelihood of Cr(VI) plume control, the installation of provisional wells will be considered (see Box 6 of Figure 2.2-3). The Contingency Plan will be implemented if performance is not improved by the operational adjustments or addition of provisional wells.

Decision error will be limited through:

- A multiple lines of evidence performance assessment (Sections 4.2.3 and 4.3).
- Use of existing and additional monitoring wells for data collection (Table 2.1-2).
- Quarterly data collection at start-up to ensure the system is working properly (Table 4.2-1).

NTH IRZ DQO-5 Problem Statement: Extraction will be conducted to minimize extraction of organic carbon and reduced metal by-products, e.g. iron and manganese.

The decision statement for this DQO is: Should operations be adjusted to minimize extraction of dissolved metals? The decision rules/operational framework for evaluating extracted water quality from the NTH IRZ is shown on Figure 2.2-2. The extraction of residual organic carbon substrate or reduced metals, such as iron and manganese, from NTH IRZ Extraction Wells may increase the potential for fouling of the NTH IRZ Injection Wells receiving the extracted water. Extraction wells IRZ-9 and IRZ-23 are the most likely to extract organic carbon or reduced metal by-products, given their proximity to the IRZ Injection Wells. As inputs to the decision, samples will be collected from the extraction wells and analyzed for organic carbon, iron, and manganese, among other water quality parameters, as outlined in Section 4.2.5 and summarized in Table 4.2-1.

Operational adjustments to address extracted organic carbon or reduced metals caused by injections in nearby injection wells include reducing TOC injection concentrations and changing injection or extraction flow rates, as detailed in the decision rules on Figure 2.2-2. By reducing TOC injection concentrations, the organic carbon substrate may be consumed before reaching the extraction well. Decreasing the injection flow rates or extraction flow rates would decrease the lateral hydraulic gradient and reduce the potential for extraction of water with residual organic carbon or reduced metal by-products by the extraction wells. Extraction wells may also need to be taken off-line for variable periods of time to control these impacts, or to maintain the well. These operational adjustments, including the shutdown of any given injection or extraction well, would be coupled with an assessment of the strength of the IRZ and Cr(VI) treatment in that area per NTH IRZ DQO-2. However, it is anticipated that if treated water is being extracted, the IRZ would be established in the area and continued operation would not be needed. In addition, the overall flow balance of the system will be considered when adjusting the injection and extraction flows to ensure that carbon distribution is still occurring in areas that need treatment.

Decision errors will be limited through:

- Water quality monitoring at each NTH IRZ extraction well (Section 4.2-5, Table 4.2-1).
- Quarterly or more frequent monitoring initially to evaluate extracted water quality (Table 4.2-1).

2.2.2 Inner Recirculation Loop (IRL)

The intent of the IRL is to: (1) induce a hydraulic gradient that will flush the Cr(VI) plume toward the NTH IRZ; (2) facilitate the cleanup of the Colorado River floodplain; and (3) control the migration of potential by-products generated by the NTH IRZ.

IRL DQO-1 Problem Statement: Inner loop recirculation will be operated to facilitate flushing of the Cr(VI) plume through the NTH IRZ.

The decision statement for this DQO is: should IRL operation be modified to facilitate flushing of the hexavalent chromium plume? The decision rules/operational framework for evaluating the development of hydraulic gradients to facilitate Cr(VI) plume flushing is illustrated on the right-hand side of the decision rules in Figure 2.2-4. Data will be compared to the anticipated concentration range and timing based on solute transport modeling as presented in Tables 2.1-4, 2.1-5, and 2.2-1.

Inputs to the decision include hydraulic gradient data, solute transport modeling, and hexavalent chromium concentration data. The hydraulic gradient will be evaluated through analysis of water levels collected across the site, including at IRL injection dose response wells where water level mounding is anticipated and at extraction wells where groundwater drawdown is anticipated (see also Section 4.3). The study area is across the site, as indicated by the IRL water level monitoring network listed in Table 2.1-2. Observed hydraulic gradients will be compared on a site-wide basis to anticipated gradients as simulated with flow modeling that will be updated per the model update schedule. Model updates are planned to be updated approximately annually during start-up and during five-year reviews thereafter.

In addition, Cr(VI) concentration changes from IRL injection downgradient monitoring wells will be compared to anticipated concentration changes and timeframes predicted from solute transport modeling, as summarized in Tables 2.1-4, 2.1-5, and 2.2-1. The IRL injection downgradient monitoring wells are shown on Figure 2.2-1 and identified on Table 2.1-2. The details of the sampling program for these wells are presented in Section 4.2.2 and summarized on Table 4.2-1. If the change in hydraulic gradient and the changes in downgradient monitoring well Cr(VI) concentration trends are not within expectations (see Boxes 22-26 on Figure 2.2-4), short-term adjustments to improve performance, such as increasing injection rates or adjusting the flow balance across the IRL, will be considered for implementation (see Boxes 29 and 30 on Figure 2.2-4). Changes to freshwater injection rates will be considered in concert with changes to River Bank Extraction Well flow rates (see Section 2.2.4). Longer-term changes may include installation of additional injection wells, such as provisional well IRL-5 (see Box 28 on Figure 2.2-4) if short-term operational adjustments are found to be insufficiently effective. An increase in injection rates in a given well or the addition of a well will require either decreasing injection rates in other wells or increased extraction rates from the River Bank Extraction Wells or freshwater source and may require additional extraction capacity. The changes will be made and flow rates will be balanced across the system to optimize the hydraulic gradient across the system. If the desired hydraulic gradients cannot be achieved and Cr(VI) concentrations are not declining within expectations such that the remedy duration is projected to be of an unacceptable duration, the Contingency Plan will be implemented.

Decision errors will be limited through:

- Placement of monitoring wells within the plume in locations to collect data on flushing of hexavalent chromium concentration trends (Figure 2.2-1, Tables 2.1-2, 2.1-4, 2.1-5).
- Sample collection frequency based on solute transport modeling predictions (See Tables 2.1-4 and 2.1-5)
- Evaluation of timeframe predictions based on model re-calibration with installation and operational data.

IRL DQO-2 Problem Statement: Cr(VI) in groundwater extracted from the River Bank Extraction Well system must be treated if levels exceed the target Cr(VI) concentration.

The decision statements for this DQO are;

- Does water extracted from the river bank contain Cr(VI) above background and require carbon amendment?
- If hexavalent chromium treatment is required, should carbon-amended injection well operations be modified to ensure Cr(VI) treatment?
- Are constituents in extracted water degrading injection well performance?

Inputs to the decision include Cr(VI) and extracted water quality data. The study area is the extracted water and monitoring wells, and the IRL injection wells and dose response wells. The decision rules evaluating data and making operational changes to the IRL carbon injections is presented on the left-hand side of Figure 2.2-4. Inputs to the decision-making are analytical data collected from the river bank extracted water (see Section 4.2.5). If Cr(VI) is present in groundwater extracted from the River Bank Extraction Wells at a blended concentration that exceeds the target clean-up level of 32 μg/L, the recirculated groundwater will be amended with carbon substrate and process control monitoring will be conducted to enhance treatment. Cr(VI) concentration data will be collected from the extracted groundwater. If the Cr(VI) concentration in the extracted water is greater than 32 μg/L, then the carbon amendment system will be turned on or continue to operate if already on. If the Cr(VI) concentration is less than 32 μg/L, the carbon amendment system will be turned off or remain off.

If the carbon amendment system is active, data will be collected from the IRL injection dose response monitoring wells, listed in Table 2.1-2 and shown on Figure 2.2-1, to evaluate Cr(VI) treatment and by-product generation. The sampling program for these wells, which define the study area boundaries, is detailed in Section 4.2.1 and summarized on Table 4.2-1. If TOC concentrations are less than anticipated (per Table 2.2-1) and Cr(VI) is not treated to less than 32 μg/L in samples collected from dose response wells, then operational adjustments such as increasing TOC injection concentrations or changing dosing parameters will be made. If by-product concentrations

are above the anticipated range, the TOC concentration will be decreased or other dosing parameters (i.e., duration or frequency of dosing) will be adjusted.

The process/decision rules for evaluating extracted water quality data is presented on the left-hand side of Figure 2.2-4. Inputs to the decision-making include analytical data collected from the river bank extracted water (see Section 4.2.5). If concentrations of reduced metals are elevated and it is affecting injection well performance (see O&M Manual Volume 1, Section 4 for details on evaluating injection well performance), then adjustments will be made to improve injection well performance. Short-term operational changes that will be considered include increasing the backwashing and chemical rehabilitation frequency, and adjusting extraction rates or the flow balance if concentrations of fouling constituents vary among wells. Adjustments of the extraction rates would have to be weighed against the hydraulic control needs and performance of the River Bank Extraction Wells as discussed in IRL DQO-3, below. The addition of low concentrations of TOC to maintain a slightly reduced water chemistry signature in the injection well may also be applied; this will be coupled with the complementary monitoring associated with TOC addition as described in the previous paragraph. If injection well maintenance becomes unacceptably costly or burdensome due to the re-injection of reduced metals, treatment for removal of those metals prior to re-injection may be considered. Should this occur, the regulatory agencies and Tribes will be informed prior to commitment.

Decision errors will be limited through:

- Collection of water quality data from individual extraction wells and from the combined stream (Section 4.2-5, Table 4.2-1)
- Monitoring in the immediate vicinity of injection wells to ensure injected water is treated adequately (Section 4.2-1, Table 4.2-1, Figure 4.2-1)
- Monthly to quarterly data collection at start-up, followed by continued quarterly monitoring to quickly address water quality changes (Table 4.2-1)

IRL DQO-3 Problem Statement: Migration of Cr(VI) will be controlled.
IRL DQO-4 Problem Statement: Migration of by-products will be controlled.

The decision statement for these DQOs are:

- Should operations of River Bank Extraction Wells be modified to improve control of hexavalent chromium and in situ by-products in the Floodplain?
- Are currently operating screen intervals of the River Bank Extraction Wells sufficient to control the hexavalent chromium or by-products, above ambient levels, in the Floodplain?

The decision rules/operational framework for the River Bank Extraction Wells are shown on Figure 2.2-5. The study area for this DQO is groundwater beneath the floodplain and Arizona and the surface water. As inputs to the decisions, Cr(VI) and by-product concentration trends will be monitored in floodplain process control monitoring wells and Arizona wells. Cr(VI) and by-products data from the river bank extraction monitoring well network (see also Section 4.2.3) and surface water sampling network (see also Section 3) will be used to evaluate the adequacy of the system's control of the Cr(VI) plume and by-product migration. The monitoring well and surface water sampling locations are listed on Table 2.1-2 and shown on Figure 2.2-1, and the sampling programs are detailed in Sections 3 and 4.

The analytical and water level data collected will be used to adjust the flow model per the model update schedule, and a lines-of-evidence approach will be used to evaluate the control of Cr(VI) and/or by-products, as discussed in further detail in Section 4.3. Model updates are planned to be conducted approximately annually during start-up and during five-year reviews thereafter. If control of Cr(VI) and by-products is assessed as not likely to be achieved, operational adjustments will be made, as shown on Figure 2.2-5. Operations may be improved by adjusting extraction rates or taking further contingency measures, such as adding provisional extraction wells . If it is determined from the evaluation of concentrations and hydraulic control evaluation that control for Cr(VI) and/or by-products is needed in the shallow unit, extraction from intervals in the shallow unit

will be considered as part of contingency plan implementation. If less extraction is needed to maintain hydraulic control of the target capture zone as defined in Section 4.3, extraction rates may be decreased. Specific metrics for defined well pairs located in the floodplain will address hydraulic control created by the River Bank Extraction Wells as discussed in Section 4.3.

If extraction rates need to be increased, the IRL injection system may need to be modified to accommodate increased injection rates (see Boxes 9 through 11 on Figure 2.2-5). Wells may be rehabilitated or the flow balance adjusted in the short term, while the addition of provisional injection wells can be considered in the long term if short-term increases in injection capacity are determined to be insufficient. If operational adjustments do not result in adequate control of the Cr(VI), additional contingency measures may be implemented.

IRL DQO-5 Problem Statement: The naturally-occurring reducing rind will be monitored for changes in water quality.

The decision statement for this DQO is: Do changes in the water quality parameters in the rind warrant additional investigation? Geochemical parameters indicative of reducing conditions in the floodplain reducing rind include low DO, low oxidation reduction potential (ORP), dissolved manganese and iron concentrations above detection limits, dissolved arsenic, and potentially low concentrations of dissolved nitrate. The analytes in the groundwater are indicative of reducing conditions generated by the rind. These analytes will be monitored to assess the character of the reducing rind during remedy operations as inputs to the decision (see also Section 4.2.3 and Table 4.2-1). The study area is the floodplain groundwater. The data will be monitored over time to assess changes in the groundwater quality. Trends will also be evaluated in light of other various factors that could cause changes. For instance, implementation of the remedy will involve changes to the flow regime (flow rates and directions) within the floodplain, which may cause shifts in the steady state concentrations of redox indicators. In addition, baseline analyte concentrations within floodplain monitoring wells are highly variable. Therefore, although the greatest emphasis will be placed on shallow monitoring wells within the NTH IRZ downgradient and river bank extraction monitoring well networks, the entire dataset will be considered when evaluating the overall impact to the reducing rind, and multiple lines of investigation will be evaluated to understand the data trends. This will be necessary to provide the proper context on any apparent impacts for a given well in the network. For example, water quality may be highly variable in any given monitoring well in the floodplain, particularly when the flow regime is changed. Accordingly, changes in concentrations of redox parameters in any given well over a short timeframe may or may not be indicative of overall impacts to the reducing rind; the change will need to be assessed within the context of the entire dataset, and within the context of solute transport model predictions (Appendix B of the Final BOD). The presence and effectiveness of the engineered reducing zone will also be considered when evaluating changes to the natural reducing zone. If broad changes to the reducing conditions occur, further investigations may be warranted. The types of additional investigations conducted will be dependent on the nature of the observations. These additional investigations may include (but would not be limited to) supplementary groundwater sampling for additional analytes and/or increased monitoring frequency, installation of provisional wells, and/or sampling of aquifer solids and solid-phase analyses. Decision errors will be limited through assessing multiple lines of geochemical evidence for assessing reducing rind impacts.

IRL DQO-6 Problem Statement: The river bank extracted groundwater will be monitored for changes in water quality over time.

The decision statement for this DQO is: Is there a change in water quality in extracted river bank water injected into IRL injection wells that merits agency notification? The inputs to the decision will be water quality data collected from the combined stream of extracted river bank water and analyzed for the suite of constituents per Table 5.2-4 in Section 5. For the purposes of the DQO, data are collected from the river bank extracted water, and the extracted water stream is therefore the “study area” for this DQO.

Action levels will serve as a mechanism to notify the agencies of changes in injected water quality. Initial concentrations of the combined extracted river bank water will be established at start-up and will guide the establishment of action levels. Data collected within the first six months of operation of the River Bank Extraction Wells will be considered initial extracted water concentrations. Section 4.2.6 details the planned sampling

frequency for inorganic and organic constituents. For inorganic constituents, samples will be collected monthly for the first six months prior to switching to a quarterly frequency, providing six samples for the establishment of initial extracted water concentrations. The maximum concentration detected in the six samples will serve as the initial extracted water concentration for establishing action levels, as described in the next paragraph. The organic suite will be sampled once in the first year of operation. The majority of constituents included in the organic suite are anticipated to be non-detect, in which case the initial extracted water concentration would be established as less than the reporting limit. If an organic analyte is detected in the first samples collected, three additional samples will be collected for that analyte within the first six months of operations, and the initial extracted concentration will be established as the maximum concentration detected.

Action levels for agency notifications will be determined once the initial extracted water quality has been established. Action levels will be established for metals, herbicides, pesticides, volatile organic compounds (VOCs), polycyclic aromatic hydrocarbons (PAHs), and radionuclides. Exceptions to this rule include arsenic and manganese, for which monitoring will be implemented to satisfy the DQOs established in Section 2—i.e., Freshwater DQO-2 (see Section 2.2.4) and Compliance DQO-3 (see Section 2.1) and for which action levels were not set. Action levels will also be established for field constituents, anions, and other general chemistry constituents that have an MCL/SMCL. This framework for establishing action levels is summarized in a flowchart format on Figure 2.2-10.

If the constituent is present in the initial samples of the extracted water, then the action level will be established as a 25% increase over the maximum initial extracted water concentration. If the constituent is not detected in the initial samples, then the action level will be established as a 25% increase over the reporting limit used for the analysis of the set of initial samples. If a site-wide background concentration representative of site-wide groundwater is available for a given constituent and is higher than a 25% increase over the maximum initial extracted water concentration, the action level will be 75% of the site-wide background concentration.

The decision flowchart outlining agency notification requirements is provided as Figure 2.2-11. If the constituent is detected in a sample above the action level, the sample will be reanalyzed if within holding time. If the holding time has been exceeded, a new sample will be collected and re-analyzed within 45 days. If the re-sample confirms the exceedance, the agencies will be notified and next steps will be considered. Next steps could include statistical analysis of the data to determine if the increase in concentration of the constituent is significant and/or additional monitoring of the extracted water source and groundwater monitoring wells.

2.2.3 Topock Compressor Station (TCS) Recirculation Loop

TCS DQO-1 Problem Statement: TCS injection wells will be operated to treat Cr(VI) in groundwater beneath the TCS.

The decision statement for this DQO is: should TCS loop injection well operations be modified to promote better hexavalent chromium treatment? The decision rules/operational framework for the TCS Injection Wells is shown on Figure 2.2-6. As inputs to the decision data will be collected from the TCS Recirculation Loop dose response monitoring wells (the study area), listed in Table 2.1-2 and shown on Figure 2.2-1. The sampling program for these wells, which define the study area boundaries, is detailed in Section 4.2.1 and summarized on Table 4.2-1. If TOC concentrations are less than anticipated (per Table 2.2-1) and Cr(VI) is not treated to less than 32 µg/L in samples collected from dose response wells, than operational adjustments such as increasing TOC injection concentrations or changing dosing parameters will be considered. If by-product concentrations are above the anticipated range, consideration will be given to decreasing the TOC concentration or adjusting the dosing parameters.

In addition, the TCS injection wells will only be operated if the freshwater injection at FW-2 is operating at an effective injection rate to control potential Cr(VI) or in-situ by-product migration from the TCS injections. Results of the modeling effort indicate that the potential for westward flow from the TCS Injection Wells, and the resulting westward expansion of the plume, is sufficiently mitigated by the natural eastward flow gradient and the injection of fresh water at FW-2, located outside of the plume footprint, at a nominal rate of 50 gallons per minute (gpm) (i.e., approximately double the combined nominal TCS injection flow rate of 27 gpm; see Appendix B of the Final BOD). Monitoring will be conducted to verify the model predictions, and lines of evidence

that will be used to evaluate groundwater flow and plume control in the area west of the TCS Injection Wells will include: trends in analytical data (e.g., Cr[VI], by-products, and potentially TOC) collected from the TCS Recirculation Loop by-product monitoring wells located to the west of the TCS Injection Wells (Table 2.1-2); and comparison of groundwater elevation data/observed hydraulic gradients to model-predicted gradients. The concentration trend analysis will include an evaluation of consecutive monitoring events post-remedy startup to determine whether a statistically significant increase with time is observed relative to historical data at each TCS Recirculation Loop by-product monitoring well; trends in Cr(VI), by-product, and TOC concentrations will be considered within expectations if no statistically significant increase is observed. In addition, tracer testing may be implemented if other lines of evidence are inconclusive. The sampling program for the TCS Recirculation Loop by-product monitoring wells is summarized on Table 4.2-1. The process for data evaluation and operational adjustments is presented on the Figure 2.2-6 flowchart. Tracer injections may also be used if other lines of evidence are inconclusive. If the lines of evidence suggest that freshwater injection at FW-2 is not sufficient to control potential Cr(VI) or in-situ by-product migration from the TCS injections, then operational adjustments (e.g., adjusting injection rates) will be considered as shown on Figure 2.2-6. The Contingency Plan will be implemented if performance is not improved by the operational adjustments. Decision errors will be limited through monitoring does response wells to ensure they system is working properly.

TCS DQO-2 Problem Statement: TCS Recirculation Loop Transwestern Bench Extraction Wells will be operated to remove Cr(VI) mass from the high concentration area in the vicinity of the TCS and control migration toward the East Ravine.

The decision statement for this DQO is: should extraction system operations or configuration be changed to improve Cr(VI) removal and migration control? The decision rules/operational framework for the TCS Recirculation Loop Transwestern Bench extraction are shown on Figure 2.2-7. As inputs to the decision, data will be collected from the extracted groundwater and the Transwestern Bench extraction monitoring well network (the study area), listed in Table 2.1-2 and shown on Figure 2.2-1. These sampling programs are detailed in Sections 4.2.5 and 4.2.4, respectively, and summarized on Table 4.2-1. Multiple lines of evidence will be used to evaluate and optimize the hydraulic control of the Transwestern Bench extraction system, as outlined in Section 4.3 and shown on Figure 2.2-7. If additional control is needed, operational changes will be made such as increasing extraction rates or adding provisional extraction wells (see Boxes 5 and 6, Figure 2.2-7). Increased extraction rates would be attempted in the short term, while the addition of provisional extraction wells would be considered if short-term extraction rate increases were found to be insufficiently effective.

Decision errors will be limited through assessment and optimization of extraction effectiveness through multiple lines of evidence.

TCS DQO-3 Problem Statement: East Ravine Extraction Wells will be operated to remediate Cr(VI) and control migration towards the river.

The decision statement for this DQO is: Should extraction systems be changed to optimize Cr(VI) treatment and migration control? The decision rules/operational framework for the TCS Recirculation Loop East Ravine extraction system is shown on Figure 2.2-8. Inputs to the decision include analytical data and solute transport modeling. The study area includes and East Ravine extraction network, monitoring network, and surface water. Analytical data collected from East Ravine Extraction Wells (see also Section 4.2.5), monitoring wells (see also Section 4.2.4) and surface water sampling locations (see also Section 3), as well as water level data collected from the East Ravine extraction monitoring well network, will be used to adjust the flow model per the model update schedule. Model updates are planned approximately annually during start-up and during five year reviews thereafter. These sampling locations are listed in Table 2.1-2, and the sampling programs are detailed in Sections 3 and 4. A lines-of-evidence approach will be used to evaluate the potential migration of Cr(VI), as discussed in further detail in Section 4.3. The proposed East Ravine Extraction Wells will be within the fractured bedrock; therefore, sufficient well depth will be important to (1) address depth of potential Cr[VI] in groundwater, and (2) allow for sufficient available drawdown in order to maximize groundwater extraction.

If hydraulic control is assessed to be inadequate, operational changes will be made such as adding provisional extraction wells to increase extraction rates if the existing extraction wells are operating at maximum capacity. However, if the East Ravine Extraction Wells are not operating at maximum capacity, increasing extraction rates in existing wells will be attempted (see Boxes 5 and 6 on Figure 2.2-8). If operational adjustments do not result in hydraulic control of the Cr(VI) plume, the Contingency Plan will be implemented.

If extraction rates are increased, the TCS injection system may need to be modified to accommodate increased injection rates (see Boxes 8 through 10 on Figures 2.2-7 and 2.2-8). Wells may be rehabilitated or the flow balance adjusted in the short term. Decision errors will be limited through evaluation of plume control.

2.2.4 Freshwater Injection

Freshwater DQO-1 Problem Statement: Freshwater injections will be operated to facilitate flushing of the Cr(VI) plume through the NTH IRZ and to contain carbon-amended water and in-situ by-products from the IRL.

The decision statement for this DQO is: Should freshwater injection well operations be modified to facilitate flushing of the Cr(VI) plume and IRL carbon-amended injection water? Inputs to the decision include Cr(VI) and extracted water quality data. The study area is the extracted water and monitoring wells, and the IRL injection wells and dose response wells. The decision rules for evaluating the development of hydraulic gradients to facilitate Cr(VI) plume flushing is illustrated on Figure 2.2-9. Water level data will be collected across the site, and IRL injection downgradient monitoring wells (see also Section 4.2.2) will be used to assess Cr(VI) concentration changes. Monitoring well locations are listed in Table 2.1-2. Data collected will be compared to model output, and if necessary the model will be adjusted to better reflect field data per the model update schedule. Model updates are planned to be conducted approximately annually during start-up and during five-year reviews thereafter. The model will then be used to project remedial timeframes, and the need for adjustments will be considered in the light of projected changes to the remedial timeframe or weaknesses in the remediation system. If needed, operational adjustments to the freshwater injections including increasing injection rates or adjusting the flow balance in the short term, as well as additional contingency measures such as adding injection wells, will be considered for implementation. Increasing injection rates in a given well will require either decreasing injection rates in other wells or increasing the extraction rate from the freshwater source. Changes to freshwater injection rates will be considered in concert with changes to River Bank Extraction Well flow rates (see Section 2.2.2).

Arsenic and manganese concentrations will be compared to expected concentrations in the IRL by-product monitoring wells, as summarized in Table 2.2-1. IRL by-product monitoring well locations, which define the study area boundaries, are shown in Figure 2.2-1 and listed in Table 2.1-2. The sampling program for these wells is detailed in Section 4.2.2. If concentration trends are not within expectations, short-term adjustments will be considered for implementation, similar to those listed above.

Decision errors will be limited through:

- Placement of monitoring wells within the plume in locations to collect data on flushing of hexavalent chromium concentration trends.
- Sample collection frequency based on solute transport modeling predictions (See Table 2.1-3, 2.1-4, and 2.1-5)
- Evaluation of timeframe predictions base on model re-calibration with installation and operational data.

Freshwater DQO-2 Problem Statement: Freshwater injection will be operated to manage migration of arsenic injected from the freshwater source.

The decision statement for this DQO is: should injection operations be modified to manage migration of arsenic injected from the freshwater source? The data collection program and decision rules for this DQO are based upon remedy requirements put forth by the State Water Resources Control Board (SWRCB) in a letter dated November 20, 2013 (the State Board letter; SWRCB 2013). The study area for this DQO is the vicinity of the injection wells that receive fresh water. Inputs to the decision are dissolved arsenic concentrations collected from the freshwater arsenic monitoring wells specified in Table 2.1-2. Additional water level data, analytical data, and operational data

may also be used. Injection wells that may receive fresh water during the course of the remedy include proposed injection wells FW-1, FW-2, IRL-1, IRL-2, IRL-3, and IRL-4. Per the State Board letter, freshwater arsenic monitoring wells are planned as shown on Figure 2.2-1. Details on the locations of the freshwater arsenic monitoring wells are provided in Section 4.2.7.

Decision rules for management of arsenic injected from fresh water are presented on the right side of Figure 2.2-9. If the leading edge of the arsenic plume above the 10 µg/L water quality objective extends more than 150 feet from injection locations receiving fresh water, action will be triggered. First, samples will be collected to verify the detection within 45 days. If the detection is confirmed, the DTSC and DOI will be notified and response actions will be taken. Response actions will include re-assessment of the modeling calculations in conjunction with an evaluation of interim actions that can be taken to limit migration of the arsenic plume, if needed. These interim actions may include control of arsenic through operational adjustments, such as rebalancing freshwater and river bank water injections (flow rates, number, and/or location of injection wells receiving fresh water versus river bank water), aeration of fresh water prior to injection to reduce arsenic mobility, or triggering of the contingent arsenic treatment system (see Section 2.3 of Volume 3 of this O&M Manual).

If dissolved arsenic is detected above the water quality objective of 10 µg/L at a 225-foot monitoring well due to injection of fresh water, then a verification sample will be collected and analyzed within 45 days. If the re-sample result confirms the exceedance, freshwater injection at the corresponding injection location will be shut down within 24 hours of receipt of the confirmation data, the DTSC and DOI will be notified, and the contingency plan will be implemented (Section 2.3 of Volume 3 of this O&M Manual). Implementation of the contingency plan may consist of pre-treatment for arsenic or evaluation of bringing online the contingent freshwater source(s) (Topock-2/-3 and Site B wells).

Note, the data collection and data evaluation described in this section apply to the 150- and 225-foot freshwater arsenic monitoring wells when fresh water is being injected at the associated injection well. When river bank water is injected, by-products (including arsenic) monitoring and data evaluation, will be conducted in accordance with Freshwater DQO-1. If arsenic concentrations and exceedances in the freshwater arsenic monitoring well network are related to the injection of river bank water or carbon amendment, rather than freshwater injection, the response actions would be modifications to the river bank injection or carbon amendment, rather than shutdown or modification of the freshwater injection.

Freshwater DQO-3 Problem Statement: The freshwater source will be monitored for changes in water quality over time.

The decision statement for this DQO is: Has there been a change in water quality in the freshwater source such that the agencies should be notified? The inputs to the decision will be water quality data collected from the freshwater source, i.e. the study area, and analyzed for the suite of constituents per Table 5.2.-4 in Section 5. For the purposes of the DQO, data is collected from the freshwater source, and the freshwater source stream is therefore the “study area” for this DQO.

Analytical data collected from the freshwater source will be used to track injected water quality based on action levels. Action levels will serve as a mechanism to notify the agencies of changes in water quality. Final action levels will be determined using initial data collected during startup of the freshwater injection system. These action levels will be selected according to the logic illustrated on Figure 2.2-10 and will be based on initial freshwater source data according to the same procedure as described above for IRL DQO-5. An action level for arsenic is not established given that this constituent will be evaluated under Freshwater DQO-2 according to SWRCB requirements. The decision flowchart outlining agency notification requirements and next steps is provided in Figure 2.2-11, as described above for IRL DQO-5. Next steps could include statistical analysis of the data to determine if the increase in concentration of the constituent is significant and/or additional monitoring of the freshwater source and groundwater monitoring wells.

Table 2.1-1
Data Quality Objectives
Groundwater Remedy Operation and Maintenance Manual
Volume 2: Sampling and Monitoring Plan
PG&E Topock Compressor Station, Needles, California

	1. State the Problem	2. Decision Statements	3. Inputs to the Decision	4. Study Area Boundaries	5. Decision Rules	6. Limits of Decision Errors	7. Optimize the Design for Data Collection
COMPLIANCE							
1) Surface Water (RAO 2)	The remedy must be implemented in compliance with RAO 2 (prevent or minimize migration of total chromium and hexavalent chromium to ensure concentrations in surface water do not exceed water quality standards).	Modify operations or remedy components to meet the RAO?	Surface water sampling results (Section 3.2, Table 2.1-3)	Surface water sampling location network.	If Cr(VI), arsenic, or manganese concentrations increase in surface water samples and are attributable to the Topock site, operational changes will be implemented per the process control decision rules. (Figures 2.2-3, 2.2-5, 2.2-8) If Cr(VI), arsenic, or manganese concentrations do not return to baseline as a result of the operational adjustments, the contingency plan will be implemented.	Limit decision error through: - Collection of samples upriver and downriver of potentially affected areas to accurately attribute concentration changes to the Topock site (Figure 2.1-1). - Quarterly to semi-annual data collection throughout the lifetime of remedy operations (Table 2.1-3).	See Section 3.1
2) Inside the Plume (RAO 3)	The remedy must be implemented in compliance with RAO 3 (reduce the mass of total chromium and hexavalent chromium in groundwater at the site to achieve compliance with ARARs in groundwater).	Modify operations or remedy components to meet the RAO?	hexavalent chromium concentration data from monitoring wells in the interior of the plume (Table 2.1-3).	Interior of the plume	If hexavalent chromium concentrations are not decreasing within expected timeframes, operational changes (potentially including the addition of provisional IRZ wells) will be implemented per the process control decision rules (Figures 2.2-2 through 2.2-9). If operational changes do not improve the hexavalent chromium concentration trends, the contingency plan will be implemented.	Limit decision error through: - Groundwater monitoring at multiple points distributed laterally and vertically across plume, spanning a range in anticipated cleanup timeframes (Figures 2.2-1, Tables 2.1-3, 2.1-4, 2.1-5). - Monitoring with a frequency consistent with anticipated cleanup timeframes (Table 2.1-3).	See Section 3.1
3) Outside the Plume (RAO 4)	The remedy must be implemented in compliance with RAO 4 (the target remediation area does not permanently expand following completion of the remedial action)	Modify operations or remedy components to meet the RAO?	hexavalent chromium and byproduct concentration data from monitoring wells outside of the baseline plume (Table 2.1-3)	Outside of the Plume	If Cr(VI), arsenic or manganese concentrations increase and persist above long term expectations outside the baseline hexavalent chromium plume, operational changes will be implemented per the process control decision rules (Figures 2.2-1, 2.1-4, 2.2-9). If operational changes do not improve the Cr(VI), arsenic or manganese concentrations outside the baseline hexavalent chromium plume, the contingency plan will be implemented.	Limit decision error through: - Collection of samples from outside of the baseline hexavalent chromium plume (Table 2.1-3, Figure 2.2-1). - Sampling frequency based on anticipated arrival times of water affected by various components of the remedy (Table 2.1-3). - Quarterly collection of water level data and continuous collection of transducer data to assess hydraulic performance, ensuring plume control (Table 2.1-3). - Comparison of Cr(VI) and byproduct dynamics with solute transport model predictions to assess performance .	See Section 3.1

Table 2.1-1
Data Quality Objectives
Groundwater Remedy Operation and Maintenance Manual
Volume 2: Sampling and Monitoring Plan
PG&E Topock Compressor Station, Needles, California

	1. State the Problem	2. Decision Statements	3. Inputs to the Decision	4. Study Area Boundaries	5. Decision Rules	6. Limits of Decision Errors	7. Optimize the Design for Data Collection
PROCESS CONTROL							
National Trails Highway In-Situ Reactive Zone (NTH IRZ)							
1	The carbon substrate amendment system must be working to amend the organic carbon substrate into the recirculated groundwater.	Is the carbon amendment system working properly?	Organic carbon samples collected from the MW-20 Bench and Transwestern Bench distribution systems (Exhibits 2.2-1 and 2.2-2).	Distribution systems.	If carbon amendment systems are not delivering desired TOC concentrations, troubleshooting and repair, if needed, will be conducted.	Limit decision error through: - Collection of samples at key system locations (Section 4.2.7, Exhibits 2.2-1 and 2.2-2). - Monthly data collection at start-up to ensure system is working properly and routine sampling thereafter (Section 2.2.1).	See Section 4
2	The NTH IRZ must be complete and maintain hexavalent chromium treatment over time.	Modify operations of the NTH IRZ? Start or stop NTH IRZ recirculation and organic carbon injections? Modify the NTH IRZ design? Modify the monitoring well layout?	Organic carbon, Cr(VI), and dissolved metals analytical data from NTH IRZ dose response and downgradient monitoring wells (Table 4.2-1).	Floodplain (NTH IRZ dose response and downgradient monitoring wells)	See decision rules/operational framework in Figure 2.2-2. If operational adjustments in Figure 2.2-2 are not sufficient to control hexavalent chromium migration in the Floodplain, refer to inner recirculation loop riverbank extraction decision rules on Figure 2.2-5	Limit decision error through: - Placement of monitoring well locations at the weak points of the IRZ (mid-point between injection locations) and downgradient (Section 4.2.1, 4.2.2, Figure 2.2-1, Table 2.1-2). - Collection of a variety of parameters to evaluate establishment of hexavalent chromium reducing conditions (Table 4.2-1). - Monthly to quarterly sampling during start-up and operational changes (Table 4.2-1).	See Section 4.2.6
3	Byproduct generation and migration from the NTH IRZ must be controlled.	Modify NTH IRZ operations based on byproduct concentration trends? Modify NTH IRZ design based on byproduct concentration trends?	Organic carbon and byproduct concentration data collected from dose response wells, downgradient monitoring wells, and Riverbank extraction monitoring wells located in the Floodplain (Table 4.2-1).	Floodplain downgradient of NTH IRZ (NTH IRZ dose response wells, downgradient monitoring wells, and Riverbank extraction monitoring wells)	See decision rules/operational framework in Figure 2.2-2. If operational adjustments in Figure 2.2-2 are not sufficient to control by-product generation and migration, refer to inner recirculation loop riverbank extraction decision rules on Figure 2.2-5	Limit decision error through: - Placement of monitoring wells at a variety of locations lateral and downgradient of injection wells (Sections 4.2.1, 4.2.2, Figure 2.2-1, Table 2.1-2). - Design sampling frequency to ensure observation of concentration changes, based on anticipated timeframe for concentration changes (Table 2.1-4, 2.1-5, 4.2-1).	See Section 4.2.1, 4.2.2
4	Extraction on the north end of the NTH IRZ will be conducted to control hexavalent chromium with the NTH and Riverbank extraction systems.	Should extraction operations be modified to control hexavalent chromium migration on the north end of the NTH IRZ?	hexavalent chromium and water level data from monitoring wells on the north end of the NTH (Table 4.2-1). Groundwater modeling capture estimates. Surface water sampling hexavalent chromium data.	North end of the NTH IRZ (Northern extraction monitoring wells)	See decision rules/operational framework in Figure 2.2-3.	Limit decision error through: - A multiple lines of evidence performance assessment (Section 4.3). - Use of existing and additional monitoring wells for data collection. - ~~Monthly to Q~~uarterly data collection at start-up to ensure system is working properly.	Section 4.3
5	Extraction will be conducted to minimize extraction of TOC and reduced metal by-products, e.g. iron and manganese.	Should operations be adjusted to minimize extraction of ~~treated~~ dissolved metals?	Water quality data collected from the NTH IRZ extraction wells (Table 4.2-1).	NTH IRZ	See decision rules/operational framework in Figure 2.2-2.	Limit decision error through: - Water quality monitoring at each NTH IRZ extraction well (Table 4.2-1, Section 4.2.5). - Quarterly or more frequent monitoring initially to evaluate extracted water quality (Table 4.2-1).	See Section 4.2.5

Table 2.1-1
Data Quality Objectives
Groundwater Remedy Operation and Maintenance Manual
Volume 2: Sampling and Monitoring Plan
PG&E Topock Compressor Station, Needles, California

	1. State the Problem	2. Decision Statements	3. Inputs to the Decision	4. Study Area Boundaries	5. Decision Rules	6. Limits of Decision Errors	7. Optimize the Design for Data Collection
Inner Recirculation Loop (IRL)							
1	Inner loop recirculation will be operated to facilitate flushing of the hexavalent chromium plume through the NTH IRZ.	Should inner recirculation loop injection well operations be modified to facilitate flushing of the hexavalent chromium plume?	Water level data and hexavalent chromium concentration data from across the site (Figure 2.2-1, Table 2.1-3).	Project Area	See decision rules/operational framework in Figure 2.2-4.	Limit decision error through: - Placement of monitoring wells within the plume in locations to collect data on flushing of hexavalent chromium concentration trends (Figure 2.2-1, Tables 2.1-2, 2.1-4, 2.1-5). - Sampling collection frequency based on solute transport modeling predictions (Tables 2.1-4, 2.1-5, 4.2-1). - Evaluation of timeframe predictions based on model re-calibrated with installation and operational data.	See Section 4
2	Hexavalent chromium in groundwater extracted from the Riverbank extraction well system must be treated if levels exceed the target hexavalent chromium concentration.	Does water extracted from the Riverbank contain hexavalent chromium above background and require treatment? If hexavalent chromium treatment is required, should carbon-amended injection well operations be modified to ensure hexavalent chromium treatment? Are constituents in extracted water degrading injection well performance?	Water quality analytical data from samples collected from Riverbank extracted water (Section 4.2.3). Organic carbon, Cr(VI), and dissolved metals analytical data from dose response wells (Section 4.2.1). Injection well performance (O&M Manual Volume 1, Section 4).	Riverbank Extraction Monitoring Wells and Extraction Wells Inner Recirculation Loop Dose Response Wells	See decision rules/operational framework in Figure 2.2-4.	Limit decision error through: - Collection of water quality data from individual extraction wells and from the combined stream (Section 4.2.5, Table 4.2-1). - Monitoring in the immediate vicinity of injection wells to ensure injected water is treated adequately (Section 4.2.1, Table 4.2-1). - Monthly to quarterly data collection at start-up, followed by continued quarterly monitoring to quickly address water quality changes (Table 4.2-1).	See Section 4
3	Control migration of Cr(VI).	Should operations of Riverbank extraction wells be modified to improve control of hexavalent chromium in the Floodplain? Are currently operating screen intervals of the Riverbank extraction wells sufficient to control the hexavalent chromium in the Floodplain?	Water level and hydraulic gradient data (contour maps and well pair analysis) (Section 4.3.3.1). Hexavalent chromium concentration trends in groundwater (Section 4.3.3.3). Groundwater modeling (Section 4.3.3.2). Surface water sampling hexavalent chromium data (4.3.3.3).	Focus on Riverbank extraction monitoring network and surface water sampling locations. Data from sitewide water level monitoring may also be used.	See decision rules/operational framework in Figure 2.2-5.	Limit decision error through: - A multiple lines of evidence performance assessment (Section 4.3). - Use of existing and additional monitoring wells for data collection (Table 2.1-2).	See Section 4.3

Table 2.1-1
Data Quality Objectives
Groundwater Remedy Operation and Maintenance Manual
Volume 2: Sampling and Monitoring Plan
PG&E Topock Compressor Station, Needles, California

	1. State the Problem	2. Decision Statements	3. Inputs to the Decision	4. Study Area Boundaries	5. Decision Rules	6. Limits of Decision Errors	7. Optimize the Design for Data Collection
Inner Recirculation Loop (IRL) continued							
4	Control the migration of by-products.	Should operations of Riverbank extraction wells be modified to improve control of in situ by-products in the Floodplain? Are currently operating screen intervals of the Riverbank extraction wells sufficient to control in situ by-products, above ambient levels, in the Floodplain?	Water level and hydraulic gradient data (contour maps and well pair analysis) (Section 4.3.3.1). Byproduct concentration trends in groundwater (Section 4.3.3.3). Groundwater modeling (Section 4.3.3.2). Surface water sampling for dissolved arsenic and manganese (Table 2.1-2).	Focus on Riverbank extraction monitoring network and surface water sampling locations. Data from sitewide water level monitoring may also be used.	See decision rules/operational framework in Figure 2.2-5.	Limit decision error through: - A multiple lines of evidence performance assessment (Section 4.3). - Use of existing and additional monitoring wells for data collection (Table 2.1-2).	See Section 4.3
5	The naturally-occurring reducing rind will be monitored for changes in water quality	Do changes in the water quality parameters in the rind warrant additional investigation?	Geochemical data and water levels from fluvial monitoring wells (Section 2.2.2)	Floodplain Fluvial Aquifer	See section 2.2.2	Limit decision error through: - Assessing multiple geochemical lines of evidence for assessing reducing rind impacts (Section 2.2.2).	See Section 4
6	The Riverbank extracted groundwater will be monitored for changes in water quality over time.	Is there a change in water quality in extracted Riverbank water injected into IRL injection wells that merits agency notification?	Riverbank extraction stream groundwater quality data (Section 4.2.6)	Riverbank Extraction pipeline	See Figures 2.2-10 and 2.2-11	Limit decision error through: -Collection of quarterly to biannual from the riverbank extraction stream (Section 4.2.6) -Establishment of action levels	See Section 4.2.6
Topock Compressor Station (TCS) Recirculation Loop							
1	TCS injection wells will be operated to treat hexavalent chromium in groundwater beneath the compressor station	Should TCS loop injection well operations be modified to promote better hexavalent chromium treatment?	Organic carbon, Cr(VI), and dissolved metals analytical data from monitoring wells downgradient of the injection wells (Section 4.2.1).	TCS loop dose response and downgradient monitoring wells	See decision rules/operational framework in Figure 2.2-6.	Limit decision error through: - Monitoring of dose response wells to ensure system is working properly (Section 4.2.1, Table 4.2-1).	See Section 4
2	TCS loop Transwestern bench extraction wells will be operated to remove hexavalent chromium mass from the high concentration area in the vicinity of the TCS and control migration toward the East Ravine.	Should extraction system operations or configuration be changed to optimize hexavalent chromium migration control?	hexavalent chromium analytical and water level data from TCS loop embayment extraction monitoring wells Groundwater modeling. (Section 4.3)	TCS Loop Transwestern bench extraction monitoring wells	See decision rules/operational framework in Figure 2.2-7.	Limit decision error through: - Assessment and optimization of extraction effectiveness through multiple lines of evidence.	See Section 4.3

Table 2.1-1
Data Quality Objectives
Groundwater Remedy Operation and Maintenance Manual
Volume 2: Sampling and Monitoring Plan
PG&E Topock Compressor Station, Needles, California

	1. State the Problem	2. Decision Statements	3. Inputs to the Decision	4. Study Area Boundaries	5. Decision Rules	6. Limits of Decision Errors	7. Optimize the Design for Data Collection
Topock Compressor Station (TCS) Recirculation Loop continued							
3	East Ravine extraction wells will be operated to remediate hexavalent chromium and control migration towards the river	Should extraction system operations or configuration be changed to optimize hexavalent chromium treatment and migration control?	hexavalent chromium analytical data from East Ravine monitoring and extraction wells Water level data from monitoring well network Surface water sampling hexavalent chromium data. (Section 4.3)	TCS Loop East Ravine extraction monitoring wells and surface water	See decision rules/operational framework in Figure 2.2-8.	Limit decision error through: - A multiple lines of evidence evaluation of plume control (Section 4.3).	See Section 4.3
Freshwater Injection							
1	Freshwater injections will be operated to facilitate flushing of the hexavalent chromium plume through the NTH IRZ and to contain carbon-amended water and in-situ by-products from the inner recirculation loop	Should freshwater injection well operations be modified to facilitate flushing of the hexavalent chromium plume and inner recirculation loop carbon-amended injection water?	Water level data from across the site and analytical data from freshwater injection observation wells (Figure 2.2-1, Table 2.1-3)	Project Area	See decision rules/operational framework in Figure 2.2-9.	Limit decision error through: - Placement of monitoring wells within the plume in locations to collect data on flushing of hexavalent chromium concentration trends (Figure 2.2-1, Table 2.1-3). - Sampling collection frequency based on solute transport modeling predictions (Table 2.1-3, 2.1-4, 2.1-5). - Evaluation of timeframe predictions based on model re-calibrated with installation and operational data.	See Section 4
2	Freshwater injection will be operated to manage migration of arsenic injected from the freshwater source.	Should injection operations be modified to manage migration of arsenic injected from the freshwater source?	Dissolved arsenic concentrations collected from the freshwater arsenic monitoring wells (Table 4.2-1).	Vicinity of injection wells receiving freshwater.	See decision rules/operational framework in Figure 2.2-9.	Limit decision error through: -sampling at specified distances 150 and 225 feet from injection locations, where possible (Section 4.2.7, Table 2.1-2)	Monitoring network based on modeling per State Board letter dated November 20, 2013.
3	The freshwater source will be monitored for changes in water quality over time.	Has there been a change in water quality in the freshwater source such that the agencies should be notified?	Freshwater source water quality data (Section 4.2.6)	Freshwater pipeline	See Figures 2.2-10 and 2.2-11	Limit decision error through: -Collection of quarterly to biannual samples from the freshwater source (Section 4.2.6) -Establishment of action levels (Figure 2.2-10)	See Section 4.2.6

Table 2.1-2
Monitoring Program Wells and Surface Water Sampling Points
Groundwater Remedy Operation and Maintenance Manual
Volume 2: Sampling and Monitoring Plan
PG&E Topock Compressor Station, Needles, California

Location ID	Screened/ Monitored Interval (Model Layers)					Screened/Monitored Interval (Monitoring Zones)									Compliance Monitoring			Process Control Monitoring															Potentially Monitored Continuously via Transducer	Analyte Sampling Frequencies															
															Location relative to Chromium plume			National Trails Highway In-Situ Reactive Zone					Inner Recirculation Loop (IRL)				Topock Compressor Station (TCS) Loop						Fresh-water Injection																
	Layer 1	Layer 2	Layer 3	Layer 4	Layer 5	SA-Fluvial	MA-Fluvial	DA-Fluvial	PA-Alluvial	SA-Alluvial	MA-Alluvial	DA-Alluvial	BR-Tmc	BR-pTbr	Outside Plume [10]	Inside Plume	Surface Water	Dose Response Wells[1]	Downgradient Monitoring Wells	Riverbank and Northern NTH Extraction Wells	Riverbank Extraction Monitoring Wells	Northern NTH IRZ Extraction Monitoring Wells	Dose Response Wells[1]	Downgradient Monitoring Well	Byproduct Monitoring Well	Water Level Monitoring Well (for IRL and Freshwater Injections)	Dose Response Wells[1]	Downgradient Monitoring Well	Byproduct Monitoring Well	Transwestern Bench and East Ravine Extraction Wells	Transwestern Bench Extraction Monitoring Wells	East Ravine Extraction Monitoring Wells	Arsenic Monitoring Wells		Hexavalent Chromium	Total Chromium	Total Organic Carbon	Dissolved Arsenic	Dissolved Manganese	Dissolved Iron	Dissolved Barium	Nitrate	Nitrite and Ammonium[11]	Molyb-denum	Selen-ium	Sulfate	Total Dissolved Solids	Alkalinity	Cations/ Anions
Existing Monitoring Wells																																														
CW-01D			X	X								X			X											X									A	A										
CW-01M	X	X									X				X											X									A	A										
CW-02D			X	X								X			X									X	X								X		SA	SA	SA[3]	Q	SA	SA	SA	As needed		A		As needed	As needed	As needed	As needed
CW-02M	X	X									X				X									X	X								X		SA	SA	SA[3]	Q	SA	SA	SA	As needed		A		As needed	As needed	As needed	As needed
CW-03D			X	X								X			X									X	X										SA	SA	SA[3]	SA	SA	SA	SA	As needed		A		As needed	As needed	As needed	As needed
CW-03M		X	X								X				X									X	X										SA	SA	SA[3]	SA	SA	SA	SA	As needed		A		As needed	As needed	As needed	As needed
CW-04D			X	X								X			X										X										A	A										
CW-04M	X	X									X				X										X										A	A										
MW-9	X									X						X									X			X							A	A	As needed	A	A	A	A	A		A					
MW-10	X	X								X						X									X			X							A	A	As needed	A	A	A	A	A		A					
MW-11	X									X						X									X			X							BE	BE	As needed	BE	BE	BE	BE								
MW-12	X	X	X	X						X						X									X					X			X		Q	SA						A		A	A				
MW-13	X									X					X								X		X										SA	SA		SA	SA	SA	SA[3]	SA				As needed	As needed	As needed	As needed
MW-14	X									X					(X)							X			X										Q	Q (yr), SA	Q[3]	Q	Q	Q	Q	Q[3]		A	A	As needed	As needed	As needed	As needed
MW-15	X	X								X					(X)										X										BE	BE												
MW-16																																															
MW-17																																															
MW-18																																															
MW-19	X									X						X									X										BE	BE												
MW-20-070	X	X								X						X		X							X										M(yr), Q	Q (yr), SA	M(yr), Q	M(yr), Q	M(yr), Q	M(yr), Q	M(yr), Q	M(yr), Q	Q(yr)			M(yr), Q	As needed	As needed	As needed
MW-20-100		X	X								X					X		X							X										M(yr), Q	Q (yr), SA	M(yr), Q	M(yr), Q	M(yr), Q	M(yr), Q	M(yr), Q	M(yr), Q	Q(yr)			M(yr), Q	As needed	As needed	As needed
MW-20-130			X	X								X				X		X							X										M(yr), Q	Q (yr), SA	M(yr), Q	M(yr), Q	M(yr), Q	M(yr), Q	M(yr), Q	M(yr), Q	Q(yr)	A	A	M(yr), Q	As needed	As needed	As needed
MW-21	X	X	X							X					X			X							X										M(yr), Q	Q (yr), SA	M(yr), Q	M(yr), Q	M(yr), Q	M(yr), Q	M(yr), Q	As needed[2]	As needed		A	M(yr), Q	As needed	As needed	As needed
MW-22[4]		X	X	X		X									X				X		X				X								X		M(yr), Q	Q (yr), SA	M(yr), Q	M(yr), Q	M(yr), Q	M(yr), Q	M(yr), Q	A		A	A	M(yr), Q	As needed	As needed	As needed
MW-23-060	X												X			X									X						X		X	Q	SA					A		A	A				
MW-23-080	X	X											X		(X)										X						X		X	Q	SA					A		A	A				
MW-24A[5]	X									X						X									X										Q	SA					A		A	A				
MW-24B			X	X								X				X									X										BE	BE					A		A	A				
MW-24BR					X									X	(X)										X										Q	Q												
MW-25	X									X						X									X										BE	BE					A		A	A				
MW-26	X									X						X		X							X										M(yr), Q	Q (yr), SA	M(yr), Q	M(yr), Q	M(yr), Q	M(yr), Q	M(yr), Q	M(yr), Q	Q(yr)	A	A	M(yr), Q	As needed	As needed	As needed
MW-27-020	X					X									X						X				X								X		Q	SA	Q	Q	Q	Q	Q	Q				As needed	As needed	As needed	As needed
MW-27-060		X	X				X								X						X				X								X		Q	SA	Q	Q	Q	Q	Q	As needed				As needed	As needed	As needed	As needed
MW-27-085				X	X			X							X						X				X								X		Q	SA	Q	Q	Q	Q	Q	As needed		A	A	As needed	As needed	As needed	As needed
MW-28-025	X					X									X						X				X								X		Q	SA	Q	Q	Q	Q	Q	Q				As needed	As needed	As needed	As needed
MW-28-090		X					X								X						X				X								X		Q	SA	Q	Q	Q	Q	Q	Q		A	A	As needed	As needed	As needed	As needed
MW-29	X					X									X						X				X								X		Q	SA	Q	Q	Q	Q	Q	Q				As needed	As needed	As needed	As needed
MW-30-030	X					X									X				X		X				X								X		Q	SA	Q	Q	Q	Q	Q	Q				As needed	As needed	As needed	As needed
MW-30-050	X	X					X								(X)				X		X				X								X		Q	SA	Q	Q	Q	Q	Q	Q				As needed	As needed	As needed	As needed
MW-31-060	X									X						X									X										BE	BE												
MW-31-135		X										X			(X)										X										BE	BE												
MW-32-020	X	X				X									X				X		X				X								X		Q	SA	Q	Q	Q	Q	Q	As needed[2]				As needed	As needed	As needed	As needed
MW-32-035			X	X		X									X				X		X				X								X		Q	SA	Q	Q	Q	Q	Q	A		A	A	As needed	As needed	As needed	As needed
MW-33-040	X	X				X									X				X		X				X								X		Q	SA	Q	Q	Q	Q	Q	A		A	A	As needed	As needed	As needed	As needed
MW-33-090			X								X				X				X		X				X								X		Q	SA	Q	Q	Q	Q	Q	A		A	A	As needed	As needed	As needed	As needed
MW-33-150				X								X			X				X		X				X								X		Q	SA	Q	Q	Q	Q	Q	A		A	A	As needed	As needed	As needed	As needed
MW-33-210				X								X			X				X		X				X								X		Q	SA	Q	Q	Q	Q	Q	Q				As needed	As needed	As needed	As needed
MW-34-055		X					X								X					X	X				X								X		Q	SA	Q	Q	Q	Q	Q	A		A	A	As needed	As needed	As needed	As needed
MW-34-080			X	X				X							(X)					X	X				X								X		Q	SA	Q	Q	Q	Q	Q	A		A	A	As needed	As needed	As needed	As needed
MW-34-100				X	X			X								X				X	X				X								X		Q	SA	Q	Q	Q	Q	Q	A		A	A	As needed	As needed	As needed	As needed
MW-35-060	X									X					(X)						X				X								X		Q	SA						A		A	A	As needed	As needed	As needed	As needed
MW-35-135		X										X			(X)						X				X								X		Q	SA						A		A	A	As needed	As needed	As needed	As needed
MW-36-020	X					X									X				X		X				X								X		Q	SA	Q	Q	Q	Q	Q	As needed[2]				As needed	As needed	As needed	As needed
MW-36-040	X					X									X				X		X				X								X		Q	SA	Q	Q	Q	Q	Q	As needed[2]		A	A	As needed	As needed	As needed	As needed
MW-36-050		X					X								X				X		X				X								X		Q	SA	Q	Q	Q	Q	Q	As needed[2]				As needed	As needed	As needed	As needed

Table 2.1-2
Monitoring Program Wells and Surface Water Sampling Points
Groundwater Remedy Operation and Maintenance Manual
Volume 2: Sampling and Monitoring Plan
PG&E Topock Compressor Station, Needles, California

Location ID	Screened/ Monitored Interval (Model Layers)					Screened/Monitored Interval (Monitoring Zones)										Compliance Monitoring			Process Control Monitoring														Potentially Monitored Continuously via Transducer	Analyte Sampling Frequencies													
																Location relative to Chromium plume			National Trails Highway In-Situ Reactive Zone					Inner Recirculation Loop (IRL)				Topock Compressor Station (TCS) Loop						Fresh-water Injection														
	Layer 1	Layer 2	Layer 3	Layer 4	Layer 5	SA-Fluvial	MA-Fluvial	DA-Fluvial	PA-Alluvial	SA-Alluvial	MA-Alluvial	DA-Alluvial	BR-Tmc	BR-pTbr		Outside Plume [10]	Inside Plume	Surface Water	Dose Response Wells[1]	Downgradient Monitoring Wells	Riverbank and Northern NTH Extraction Wells	Riverbank Extraction Monitoring Wells	Northern NTH IRZ Extraction Monitoring Wells	Dose Response Wells[1]	Downgradient Monitoring Well	Byproduct Monitoring Well	Water Level Monitoring Well (for IRL and Freshwater Injections)	Dose Response Wells[1]	Downgradient Monitoring Well	Byproduct Monitoring Well	Transwestern Bench and East Ravine Extraction Wells	Transwestern Bench Extraction Monitoring Wells	East Ravine Extraction Monitoring Wells	Arsenic Monitoring Wells		Hexavalent Chromium	Total Chromium	Total Organic Carbon	Dissolved Arsenic	Dissolved Manganese	Dissolved Iron	Dissolved Barium	Nitrate	Nitrite and Ammonium[11]	Molyb-denum	Selen-ium	Sulfate	Total Dissolved Solids	Alkalinity	Cations/ Anions
MW-36-070		X					X								X				X							X								X	Q	SA	Q	Q	Q	Q	Q	As needed[2]				As needed	As needed	As needed	As needed
MW-36-090			X	X				X							(X)				X							X								X	Q	SA	Q	Q	Q	Q	Q	Q				As needed	As needed	As needed	As needed
MW-36-100				X	X			X								X			X							X								X	Q	SA	Q	Q	Q	Q	Q	Q		A	A	As needed	As needed	As needed	As needed
MW-37D			X									X				X								X											SA	SA		SA	SA	SA	SA[3]	Q		A	A	As needed	As needed	As needed	As needed
MW-37S	X									X					X								X			X									SA	SA		SA	SA	SA	SA[3]	Q		A	A	As needed	As needed	As needed	As needed
MW-38D				X								X				X								X				X							BE	BE	As needed	BE	BE	BE	BE							
MW-38S	X	X								X						X								X				X							BE	BE	As needed	BE	BE	BE	BE							
MW-39-040	X					X									X				X							X								X	Q	SA	Q	Q	Q	Q	Q	As needed[2]				As needed	As needed	As needed	As needed
MW-39-050		X					X								(X)				X							X								X	Q	SA	Q	Q	Q	Q	Q	Q				As needed	As needed	As needed	As needed
MW-39-060		X									X				(X)				X							X								X	Q	SA	Q	Q	Q	Q	Q	Q				As needed	As needed	As needed	As needed
MW-39-070			X								X				(X)				X							X								X	Q	SA	Q	Q	Q	Q	Q	Q				As needed	As needed	As needed	As needed
MW-39-080			X	X								X			(X)				X							X								X	Q	SA	Q	Q	Q	Q	Q	Q				As needed	As needed	As needed	As needed
MW-39-100				X								X				X			X							X								X	Q	SA	Q	Q	Q	Q	Q	Q				As needed	As needed	As needed	As needed
MW-40D				X								X				X			X																BE	BE						A		A	A				
MW-40S	X	X								X					X				X																BE	BE						A		A	A				
MW-41D				X								X			X				X															X	SA	SA	SA	Q	SA	SA	SA[3]	As needed		A	A	As needed	As needed	As needed	As needed
MW-41M			X									X			X				X															X	SA	SA	SA	Q	SA	SA	SA[3]	Q		A	A	As needed	As needed	As needed	As needed
MW-41S	X									X					X				X															X	SA	SA	SA	Q	SA	SA	SA[3]	Q		A	A	As needed	As needed	As needed	As needed
MW-42-030	X	X				X									X				X							X								X	Q	SA	Q	Q	Q	Q	Q	A		A	A	As needed	As needed	As needed	As needed
MW-42-055			X				X								X				X							X								X	Q	SA	Q	Q	Q	Q	Q	As needed[2]		A	A	As needed	As needed	As needed	As needed
MW-42-065				X			X								X				X							X								X	Q	SA	Q	Q	Q	Q	Q	As needed[2]				As needed	As needed	As needed	As needed
MW-43-025	X					X									X				X							X								X	Q	SA	Q	Q	Q	Q	Q	A		A	A	As needed	As needed	As needed	As needed
MW-43-075			X					X							X				X							X								X	Q	SA	Q	Q	Q	Q	Q	As needed[2]		A	A	As needed	As needed	As needed	As needed
MW-43-090				X	X			X							X				X							X								X	Q	SA	Q	Q	Q	Q	Q	As needed[2]				As needed	As needed	As needed	As needed
MW-44-070		X					X								X				X							X								X	Q	SA	Q	Q	Q	Q	Q	A		A	A	As needed	As needed	As needed	As needed
MW-44-115				X								X				X			X							X								X	Q	SA	Q	Q	Q	Q	Q	A		A	A	As needed	As needed	As needed	As needed
MW-44-125				X	X							X				X			X							X								X	Q	SA	Q	Q	Q	Q	Q	A		A	A	As needed	As needed	As needed	As needed
MW-45-095[6]				X				X								X			X							X								X	Q	SA	Q	Q	Q	Q	Q	Q				As needed	As needed	As needed	As needed
MW-46-175			X	X								X				X			X							X								X	Q	SA	Q	Q	Q	Q	Q	A		A	A	As needed	As needed	As needed	As needed
MW-46-205				X								X			X				X							X								X	Q	SA	Q	Q	Q	Q	Q	A		A	A	As needed	As needed	As needed	As needed
MW-47-055	X									X					(X)			X							X										M(yr), Q	Q (yr), SA	M(yr), Q	M(yr), Q	M(yr), Q	M(yr), Q	M(yr), Q	M(yr), Q	Q(yr)			M(yr), Q	As needed	As needed	As needed	As needed
MW-47-115		X										X			X			X							X										M(yr), Q	Q (yr), SA	M(yr), Q	M(yr), Q	M(yr), Q	M(yr), Q	M(yr), Q	M(yr), Q	Q(yr)			M(yr), Q	As needed	As needed	As needed	As needed
MW-48					X								X		X											X								X	Q	SA						A		A	A				
MW-49-135	X											X			X				X							X								X	Q	SA	Q	Q	Q	Q	Q	Q				As needed	As needed	As needed	As needed
MW-49-275			X									X			X				X							X								X	Q	SA	Q	Q	Q	Q	Q	Q				As needed	As needed	As needed	As needed
MW-49-365				X								X			X				X							X								X	Q	SA	Q	Q	Q	Q	Q	As needed				As needed	As needed	As needed	As needed
MW-50-095	X										X				(X)				X																SA	A													
MW-50-200			X	X								X				X			X																BE	BE						A		A	A				
MW-51			X	X							X					X		X	X																M(yr), Q	Q (yr), SA	M(yr), Q	M(yr), Q	M(yr), Q	M(yr), Q	M(yr), Q	M(yr), Q	Q(yr)	A	A	M(yr), Q	As needed	As needed	As needed	As needed
MW-52D			X	X				X							X				X							X								X	Q	SA	Q	Q	Q	Q	Q	As needed[2]				As needed	As needed	As needed	As needed
MW-52M			X					X							X				X							X								X	Q	SA	Q	Q	Q	Q	Q	As needed[2]				As needed	As needed	As needed	As needed
MW-52S		X					X								X				X							X								X	Q	SA	Q	Q	Q	Q	Q	As needed[2]				As needed	As needed	As needed	As needed
MW-53D				X				X							X				X							X								X	Q	SA	Q	Q	Q	Q	Q	As needed[2]				As needed	As needed	As needed	As needed
MW-53M			X	X				X							X				X							X								X	Q	SA	Q	Q	Q	Q	Q	As needed[2]				As needed	As needed	As needed	As needed
MW-53S[7]	X					X									X				X							X								X	Q	SA	Q	Q	Q	Q	Q	As needed[2]				As needed	As needed	As needed	As needed
MW-54-085		X						X							X				X							X								X	A	A		A	A	A	A	As needed		A		As needed	As needed	As needed	As needed
MW-54-140			X					X							X				X							X								X	A	A		A	A	A	A	As needed		A		As needed	As needed	As needed	As needed
MW-54-195				X								X			X				X							X								X	A	A		A	A	A	A	As needed		A		As needed	As needed	As needed	As needed
MW-55-045	X	X									X				X				X							X								X	A	A		A	A	A	A	As needed				As needed	As needed	As needed	As needed
MW-55-120				X								X			X				X							X								X	A	A		A	A	A	A	As needed				As needed	As needed	As needed	As needed
MW-56D					X			X							X				X							X								X	A	A		A	A	A	A	As needed				As needed	As needed	As needed	As needed
MW-56M					X			X							X				X							X								X	A	A		A	A	A	A	As needed				As needed	As needed	As needed	As needed
MW-56S			X			X									X				X							X								X	A	A		A	A	A	A	As needed				As needed	As needed	As needed	As needed
MW-57-050	X								X							X			X							X								X	Q	SA								A						
MW-57-070	X												X			X			X							X								X	Q	SA								A						
MW-57-185	X	X	X	X	X								X	X	X				X							X								X	Q	SA								A						

Table 2.1-2
Monitoring Program Wells and Surface Water Sampling Points
Groundwater Remedy Operation and Maintenance Manual
Volume 2: Sampling and Monitoring Plan
PG&E Topock Compressor Station, Needles, California

Location ID	Screened/ Monitored Interval (Model Layers)					Screened/Monitored Interval (Monitoring Zones)									Compliance Monitoring			Process Control Monitoring															Potentially Monitored Continuously via Transducer	Analyte Sampling Frequencies														
															Location relative to Chromium plume			National Trails Highway In-Situ Reactive Zone					Inner Recirculation Loop (IRL)				Topock Compressor Station (TCS) Loop						Fresh-water Injection																
	Layer 1	Layer 2	Layer 3	Layer 4	Layer 5	SA-Fluvial	MA-Fluvial	DA-Fluvial	PA-Alluvial	SA-Alluvial	MA-Alluvial	DA-Alluvial	BR-Tmc	BR-pTbr	Outside Plume [10]	Inside Plume	Surface Water	Dose Response Wells[1]	Downgradient Monitoring Wells	Riverbank and Northern NTH Extraction Wells	Riverbank Extraction Monitoring Wells	Northern NTH IRZ Extraction Monitoring Wells	Dose Response Wells[1]	Downgradient Monitoring Well	Byproduct Monitoring Well	Water Level Monitoring Well (for IRL and Freshwater Injections)	Dose Response Wells[1]	Downgradient Monitoring Well	Byproduct Monitoring Well	Transwestern Bench and East Ravine Extraction Wells	Transwestern Bench Extraction Monitoring Wells	East Ravine Extraction Monitoring Wells	Arsenic Monitoring Wells		Hexavalent Chromium	Total Chromium	Total Organic Carbon	Dissolved Arsenic	Dissolved Manganese	Dissolved Iron	Dissolved Barium	Nitrate	Nitrite and Ammonium[11]	Molyb-denum	Selen-ium	Sulfate	Total Dissolved Solids	Alkalinity	Cations/ Anions
MW-58-065	X								X					X	X										X						X		X		Q	SA							A					
MW-58-115		X	X											X	X										X						X		X		Q	SA							A					
MW-58-205					X									X	X										X						X		X		Q	SA							A					
MW-58BR[8]				X										X	X										X						X				Q	SA							A					
MW-59-100	X	X	X	X						X						X									X					X			X		Q	SA							A					
MW-60-125	X													X		X									X										BE	BE							A					
MW-60BR-245		X	X	X	X									X	(X)										X										BE	BE							A					
MW-61-110	X													X		X									X						X		X		Q	SA							A					
MW-62-065	X												X			X									X						X		X		Q	SA							A					
MW-62-110		X	X										X			X									X						X		X		Q	SA							A					
MW-62-190					X								X		(X)										X						X		X		Q	SA							A					
MW-63-065	X												X		X										X						X		X		Q	SA							A					
MW-64-150	X	X												X	X										X						X		X		Q	SA							A					
MW-64-205			X	X										X	X										X						X		X		Q	SA							A					
MW-64-260					X									X	X										X						X		X		Q	SA							A					
MW-64BR[8]					X									X	(X)										X						X				Q	SA							A					
MW-65-160	X									X						X									X										SA	A							A					
MW-65-225				X								X				X									X										A	A							A					
MW-66-165	X	X								X						X									X		X								Q	Q (yr), SA	Q	Q	Q	Q	Q	Q	SA(yr)	A	A	As needed	As needed	As needed	As needed
MW-66-230				X								X				X									X		X								Q	Q (yr), SA	Q	Q	Q	Q	Q	Q	SA(yr)	A		As needed	As needed	As needed	As needed
MW-66BR-270					X								X		X										X										A	A												
MW-67-185	X									X						X									X		X			X			X		Q	SA	SA	SA	SA	SA	SA	SA		A	A	As needed	As needed	As needed	As needed
MW-67-225		X	X								X					X									X		X			X			X		Q	SA	SA	SA	SA	SA	SA	SA		A	A	As needed	As needed	As needed	As needed
MW-67-260			X	X								X				X									X		X			X			X		SA	SA	SA	SA	SA	SA	SA	SA		A		As needed	As needed	As needed	As needed
MW-68-180	X									X						X									X					X			X		Q	SA							A					
MW-68-240			X	X								X				X									X					X			X		Q	SA							A					
MW-68BR-280					X									X	X										X					X			X		Q	SA												
MW-69-195	X												X			X									X										BE	BE					A		A					
MW-70-105	X												X			X									X							X		X		Q	SA							A					
MW-71-35	X	X	X	X	X					X						X			X						X										M(yr), Q	Q (yr), SA	M(yr), Q	M(yr), Q	M(yr), Q	M(yr), Q	M(yr), Q	M(yr), Q	Q(yr)	A		M(yr), Q	As needed	As needed	As needed
MW-72-80	X												X			X									X							X		X		Q	SA							A					
MW-72BR-200		X	X	X	X								X		X										X							X				Q	SA							A					
MW-73-80	X	X											X			X									X							X		X		Q	SA							A					
MW-74-240	X	X											X		X										X										A	A							A					
MWP-08																																																		
MWP-10																																																		
MWP-12																																																		
OW-01D			X	X								X			X										X								X		SA	SA		Q					A					
OW-01M		X									X				X										X								X		SA	SA		Q					A					
OW-01S	X									X					X										X								X		SA	SA		Q					A					
OW-02D				X								X			X										X								X		SA	SA		Q					A					
OW-02M		X									X				X										X								X		SA	SA		Q					A					
OW-02S	X									X					(X)										X								X		SA	SA		Q					A					
OW-3D																																																	
OW-3M																																																	
OW-3S																																																	
OW-05D				X								X			X										X										SA	SA												
OW-05M			X									X			X										X										SA	SA												
OW-05S	X									X					(X)										X										SA	SA												
PGE-07(BR)					X								X		X										X										Q	Q												
PGE-08					X								X		X										X										A	A							A					
PT-1D[5]																																																	
PT-1M[5]																																																	
PT-1S[5]																																																	
PT-2D[5]																																																	
PT-2M[5]																																																	

Table 2.1-2
Monitoring Program Wells and Surface Water Sampling Points
Groundwater Remedy Operation and Maintenance Manual
Volume 2: Sampling and Monitoring Plan
PG&E Topock Compressor Station, Needles, California

Location ID	Screened/ Monitored Interval (Model Layers)					Screened/Monitored Interval (Monitoring Zones)										Compliance Monitoring			Process Control Monitoring														Potentially Monitored Continuously via Transducer	Analyte Sampling Frequencies															
																Location relative to Chromium plume			National Trails Highway In-Situ Reactive Zone					Inner Recirculation Loop (IRL)				Topock Compressor Station (TCS) Loop						Fresh-water Injection																
	Layer 1	Layer 2	Layer 3	Layer 4	Layer 5	SA-Fluvial	MA-Fluvial	DA-Fluvial	PA-Alluvial	SA-Alluvial	MA-Alluvial	DA-Alluvial	BR-Tmc	BR-pTbr		Outside Plume [10]	Inside Plume	Surface Water	Dose Response Wells[1]	Downgradient Monitoring Wells	Riverbank and Northern NTH Extraction Wells	Riverbank Extraction Monitoring Wells	Northern NTH IRZ Extraction Monitoring Wells	Dose Response Wells[1]	Downgradient Monitoring Well	Byproduct Monitoring Well	Water Level Monitoring Well (for IRL and Freshwater Injections)	Dose Response Wells[1]	Downgradient Monitoring Well	Byproduct Monitoring Well	Transwestern Bench and East Ravine Extraction Wells	Transwestern Bench Extraction Monitoring Wells	East Ravine Extraction Monitoring Wells	Arsenic Monitoring Wells		Hexavalent Chromium	Total Chromium	Total Organic Carbon	Dissolved Arsenic	Dissolved Manganese	Dissolved Iron	Dissolved Barium	Nitrate	Nitrite and Ammonium[11]	Molyb-denum	Selen-ium	Sulfate	Total Dissolved Solids	Alkalinity	Cations/ Anions
PT-2S[5]																																														
PT-3D[5]																																														
PT-3M[5]																																														
PT-3S[5]																																														
PT-4D[5]																																														
PT-4M[5]																																														
PT-4S[5]																																														
PT-5D				X								X					X			X		X					X								X	Q	SA	Q	Q	Q	Q	Q	Q				As needed	As needed	As needed	As needed
PT-5M		X									X					X				X		X					X								X	Q	SA	Q	Q	Q	Q	Q	Q				As needed	As needed	As needed	As needed
PT-5S	X					X										X				X		X					X								X	Q	SA	Q	Q	Q	Q	Q	As needed				As needed	As needed	As needed	As needed
PT-6D[5]																																														
PT-6M[5]																																														
PT-6S[5]																																														
PT-7D[5]																																														
PT-7M[5]																																														
PT-7S[5]																																														
PT-8D			X	X								X					X								X											BE	BE													
PT-8M[5]																																														
PT-8S[5]																																														
PT-9D			X	X								X					X								X											BE	BE						A		A	A				
PT-9M			X								X						X								X											BE	BE						A		A	A				
PT-9S	X	X								X							X								X											BE	BE						A		A	A				
PTI-1D[5]																																														
PTI-1M[5]																																														
PTI-1S[5]																																														
PTR-1																																														
PTR-2																																														
TW-1[9]	X	X	X	X							X	X					X								X	X										SA	SA	SA	SA	SA	SA	SA	SA	A(yr)	A	A	As needed	As needed	As needed	As needed
TW-2D		X	X	X								X					X		X						X										X	M(yr), Q	Q (yr), SA	M(yr), Q	M(yr), Q	M(yr), Q	M(yr), Q	M(yr), Q	A	A(yr)	A	A	M(yr), Q	As needed	As needed	As needed
TW-2S	X									X	X						X								X										X	M(yr), Q	Q (yr), SA	M(yr), Q	M(yr), Q	M(yr), Q	M(yr), Q	M(yr), Q	A	A(yr)	A	A	M(yr), Q	As needed	As needed	As needed
TW-3D		X	X	X	X							X					X		X						X										X	M(yr), Q	Q (yr), SA	M(yr), Q	M(yr), Q	M(yr), Q	M(yr), Q	M(yr), Q	A	A(yr)	A	A	M(yr), Q	As needed	As needed	As needed
TW-4			X	X								X				(X)			X						X										X	M(yr), Q	Q (yr), SA	M(yr), Q	M(yr), Q	M(yr), Q	M(yr), Q	M(yr), Q	M(yr), Q	Q(yr)			M(yr), Q	As needed	As needed	As needed
TW-5		X										X				X									X										X	BE	BE												
Proposed Monitoring Wells																																														
MW-A																X						X			X										X	Q	SA										As needed	As needed	As needed	As needed
MW-B																X						X			X										X	Q	SA										As needed	As needed	As needed	As needed
MW-C																	X		X						X											M(yr), Q	Q (yr), SA	M(yr), Q	M(yr), Q	M(yr), Q	M(yr), Q	M(yr), Q	As needed[2]	As needed			M(yr), Q	As needed	As needed	As needed
MW-D																	X		X						X										X	M(yr), Q	Q (yr), SA	M(yr), Q	M(yr), Q	M(yr), Q	M(yr), Q	M(yr), Q	As needed[2]	As needed			M(yr), Q	As needed	As needed	As needed
MW-E																	X		X						X											M(yr), Q	Q (yr), SA	M(yr), Q	M(yr), Q	M(yr), Q	M(yr), Q	M(yr), Q	As needed[2]	As needed			M(yr), Q	As needed	As needed	As needed
MW-F																	X		X						X											M(yr), Q	Q (yr), SA	M(yr), Q	M(yr), Q	M(yr), Q	M(yr), Q	M(yr), Q	As needed[2]	As needed			M(yr), Q	As needed	As needed	As needed
MW-G																	X		X						X											M(yr), Q	Q (yr), SA	M(yr), Q	M(yr), Q	M(yr), Q	M(yr), Q	M(yr), Q	A	A(yr)	A	A	M(yr), Q	As needed	As needed	As needed
MW-H																	X			X		X													X	Q	SA	Q	Q	Q	Q	Q	Q				As needed	As needed	As needed	As needed
MW-I																X						X		X												SA	SA	SA[3]	SA	SA	SA	SA	As needed		A	A	As needed	As needed	As needed	As needed
MW-J																X						X		X												SA	SA	SA[3]	SA	SA	SA	SA	As needed		A	A	As needed	As needed	As needed	As needed
MW-K																	X					X								X				X	Q	SA												
MW-L																	X					X														BE	BE												
MW-M																	X					X														SA	SA		SA	SA	SA	SA[3]	As needed				As needed	As needed	As needed	As needed
MW-N																	X					X														BE	BE												
MW-O																X						X													X	Q(yr), SA	Q (yr), SA	Q	Q	Q	Q	Q	As needed				As needed	As needed	As needed	As needed
MW-P																X						X														Q	Q (yr), SA	Q[3]	Q	Q	Q	Q	Q[3]				As needed	As needed	As needed	As needed
MW-Q																X						X														Q	Q (yr), SA	Q[3]	Q	Q	Q	Q	Q[3]				As needed	As needed	As needed	As needed
MW-R																	X					X														SA	SA		SA	SA	SA	SA[3]	As needed				As needed	As needed	As needed	As needed
MW-S																X						X														A	A												
MW-T																	X					X									X				X	Q	SA								A						
MW-U																X						X														BE	BE						A		A	A				

Table 2.1-2
Monitoring Program Wells and Surface Water Sampling Points
Groundwater Remedy Operation and Maintenance Manual
Volume 2: Sampling and Monitoring Plan
PG&E Topock Compressor Station, Needles, California

Location ID	Screened/ Monitored Interval (Model Layers)					Screened/Monitored Interval (Monitoring Zones)								Compliance Monitoring			Process Control Monitoring														Potentially Monitored Continuously via Transducer	Analyte Sampling Frequencies															
														Location relative to Chromium plume			National Trails Highway In-Situ Reactive Zone					Inner Recirculation Loop (IRL)				Topock Compressor Station (TCS) Loop						Fresh-water Injection														
	Layer 1	Layer 2	Layer 3	Layer 4	Layer 5	SA-Fluvial	MA-Fluvial	DA-Fluvial	PA-Alluvial	SA-Alluvial	MA-Alluvial	DA-Alluvial	BR-Tmc	BR-pTbr	Outside Plume [10]	Inside Plume	Surface Water	Dose Response Wells[1]	Downgradient Monitoring Wells	Riverbank and Northern NTH Extraction Wells	Riverbank Extraction Monitoring Wells	Northern NTH IRZ Extraction Monitoring Wells	Dose Response Wells[1]	Downgradient Monitoring Well	Byproduct Monitoring Well	Water Level Monitoring Well (for IRL and Freshwater Injections)	Dose Response Wells[1]	Downgradient Monitoring Well	Byproduct Monitoring Well	Transwestern Bench and East Ravine Extraction Wells	Transwestern Bench Extraction Monitoring Wells	East Ravine Extraction Monitoring Wells	Arsenic Monitoring Wells		Hexavalent Chromium	Total Chromium	Total Organic Carbon	Dissolved Arsenic	Dissolved Manganese	Dissolved Iron	Dissolved Barium	Nitrate	Nitrite and Ammonium[11]	Molyb-denum	Selen-ium	Sulfate	Total Dissolved Solids	Alkalinity	Cations/ Anions
MW-W														X				X		X					X							X	Q	SA	Q	Q	Q	Q	Q	Q[2]		A	A	As needed	As needed	As needed	As needed
MW-X														X				X		X					X							X	A	A	A	As needed	As needed	As needed	As needed	As needed				As needed	As needed	As needed	As needed
MW-Y														X				X		X					X							X	A	A	A	As needed	As needed	As needed	As needed	As needed				As needed	As needed	As needed	As needed
MW-Z														X				X		X					X								SA	SA	SA	SA	As needed	As needed	As needed	SA[3]	As needed				As needed	As needed	As needed	As needed
MW-AA														X				X		X					X							X				Q												
MW-BB														X				X		X					X							X				Q												
MW-CC														X				X		X					X							X				Q												
MW-DD														X				X		X					X							X				Q												
MW-FF														X				X		X					X							X				Q												
MW-GG														X				X		X					X							X				Q												
MW-HH															X			X		X					X							X				Q												
MW-II															X			X		X					X			X				X				Q												
MW-10D															X			X		X					X			X					A	A	As needed	A	A	A	A	A		A						
MW-11D															X			X		X					X			X					BE	BE	As needed	BE	BE	BE	BE									
MW-70BR-D															X			X		X					X						X		Q	SA							A						
Provisional Monitoring Wells																																																	
MW-V														X				X		X					X			X					SA	SA	As needed	A	A	A	A	A		A	A					
MW-EE[12]														X				X		X					X							X				Q												
Unspecified slant wells														X				X		X					X							X	SA	SA						As needed		As needed	As needed	As needed	As needed	As needed	As needed
Extraction Wells																																																
IRZ-1																		X															X	M(Q), Q		M(Q), Q	M(Q), Q	M(Q), Q	M(Q), Q	M(Q), Q						As needed	As needed	As needed
IRZ-5																		X															X	M(Q), Q		M(Q), Q	M(Q), Q	M(Q), Q	M(Q), Q	M(Q), Q						As needed	As needed	As needed
IRZ-9																		X															X	M(Q), Q		M(Q), Q	M(Q), Q	M(Q), Q	M(Q), Q	M(Q), Q						As needed	As needed	As needed
IRZ-23																		X															X	M(Q), Q		M(Q), Q	M(Q), Q	M(Q), Q	M(Q), Q	M(Q), Q						As needed	As needed	As needed
RB-1																		X															X	M(Q), Q		M(Q), Q	M(Q), Q	M(Q), Q	M(Q), Q	M(Q), Q						As needed	As needed	As needed
RB-2																		X															X	M(Q), Q		M(Q), Q	M(Q), Q	M(Q), Q	M(Q), Q	M(Q), Q						As needed	As needed	As needed
RB-3																		X															X	M(Q), Q		M(Q), Q	M(Q), Q	M(Q), Q	M(Q), Q	M(Q), Q						As needed	As needed	As needed
RB-4																		X															X	M(Q), Q		M(Q), Q	M(Q), Q	M(Q), Q	M(Q), Q	M(Q), Q						As needed	As needed	As needed
RB-5																		X															X	M(Q), Q		M(Q), Q	M(Q), Q	M(Q), Q	M(Q), Q	M(Q), Q						As needed	As needed	As needed
TWB-1																												X					X	M(Q), Q		M(Q), Q	M(Q), Q	M(Q), Q	M(Q), Q	M(Q), Q						As needed	As needed	As needed
TWB-2																												X					X	M(Q), Q		M(Q), Q	M(Q), Q	M(Q), Q	M(Q), Q	M(Q), Q						As needed	As needed	As needed
ER-1																												X					X	M(Q), Q		M(Q), Q	M(Q), Q	M(Q), Q	M(Q), Q	M(Q), Q						As needed	As needed	As needed
ER-2																												X					X	M(Q), Q		M(Q), Q	M(Q), Q	M(Q), Q	M(Q), Q	M(Q), Q						As needed	As needed	As needed
ER-3																												X					X	M(Q), Q		M(Q), Q	M(Q), Q	M(Q), Q	M(Q), Q	M(Q), Q						As needed	As needed	As needed
ER-4																												X					X	M(Q), Q		M(Q), Q	M(Q), Q	M(Q), Q	M(Q), Q	M(Q), Q						As needed	As needed	As needed
ER-6																												X					X	M(Q), Q		M(Q), Q	M(Q), Q	M(Q), Q	M(Q), Q	M(Q), Q						As needed	As needed	As needed
Surface Water Sampling Locations																																																
C-NR4 (River channel)															X						X													Q	SA		Q	Q			A		A	A				
C-NR3 (River channel)															X						X													Q	SA		Q	Q			A		A	A				
C-NR1 (River channel)															X						X													Q	SA		Q	Q			A		A	A				
C-CON (River channel)															X						X													Q	SA		Q	Q			A		A	A				
C-MAR (River channel)															X						X													Q	SA		Q	Q			A		A	A				
C-R27 (River channel)															X						X													Q	SA		Q	Q			A		A	A				
C-BNS (River channel)															X						X													Q	SA		Q	Q			A		A	A				
C-R-22A (River channel)															X						X											X		Q	SA		Q	Q			A		A	A				
C-I-3 (River channel)															X						X											X		Q	SA		Q	Q			A		A	A				
C-TAZ (River channel)															X						X											X		Q	SA		Q	Q			A		A	A				
RRB (Shoreline)															X						X													Q	SA		Q	Q			A		A	A				
R-19 (Shoreline)															X						X													Q	SA		Q	Q			A		A	A				
R-28 (Shoreline)															X						X													Q	SA		Q	Q			A		A	A				
R-63 (Shoreline)															X						X											X		Q	SA		Q	Q			A		A	A				
SW-1 (East Ravine)															X						X											X		Q	SA		Q	Q			A		A	A				
SW-2 (East Ravine)															X						X											X		Q	SA		Q	Q			A		A	A				

Notes appear on the following page.

Table 2.1-2
Monitoring Program Wells and Surface Water Sampling Points
Groundwater Remedy Operation and Maintenance Manual
Volume 2: Sampling and Monitoring Plan
PG&E Topock Compressor Station, Needles, California

Location ID	Screened/ Monitored Interval (Model Layers)					Screened/Monitored Interval (Monitoring Zones)							Compliance Monitoring			Process Control Monitoring														Potentially Monitored Continuously via Transducer	Analyte Sampling Frequencies														
													Location relative to Chromium plume			National Trails Highway In-Situ Reactive Zone					Inner Recirculation Loop (IRL)				Topock Compressor Station (TCS) Loop						Fresh-water Injection														
	Layer 1	Layer 2	Layer 3	Layer 4	Layer 5	SA-Fluvial	MA-Fluvial	DA-Fluvial	PA-Alluvial	SA-Alluvial	MA-Alluvial	DA-Alluvial	BR-Tmc	BR-pTbr	Outside Plume [10]	Inside Plume	Surface Water	Dose Response Wells[1]	Downgradient Monitoring Wells	Riverbank and Northern NTH Extraction Wells	Riverbank Extraction Monitoring Wells	Northern NTH IRZ Extraction Monitoring Wells	Dose Response Wells[1]	Downgradient Monitoring Well	Byproduct Monitoring Well	Water Level Monitoring Well (for IRL and Freshwater Injections)	Dose Response Wells[1]	Downgradient Monitoring Well	Byproduct Monitoring Well	Transwestern Bench and East Ravine Extraction Wells	Transwestern Bench Extraction Monitoring Wells	East Ravine Extraction Monitoring Wells	Arsenic Monitoring Wells		Hexavalent Chromium	Total Chromium	Total Organic Carbon	Dissolved Arsenic	Dissolved Manganese	Dissolved Iron	Dissolved Barium	Nitrate	Nitrite and Ammonium[11]	Molyb-denum	Selen-ium	Sulfate	Total Dissolved Solids	Alkalinity	Cations/ Anions

Notes:
Sampling program will be re-evaluated after two years of operation.
[1] Dose Response Wells are defined as within the carbon footprint as predicted by the fate and transport model.
[2] Baseline data indicate no detectable nitrate.
[3] If associated injection well is amended with carbon
[4] A deeper boring and replacement monitoring well will be constructed at this location if the alluvium is deeper in this area.
[5] Well was influenced by historical in-situ pilot testing and may be sampled periodically to evaluate persistence of byproducts/reducing conditions.
[6] Two wells MW-45-095a and MW-45-095b exist at this location and are screened within the same interval. MW-45-095a is currently active and MW-45-095b is considered inactive.
[7] Well is currently inactive.
[8] As approved in the first quarter of 2013, packers have been removed and single zone micro-purge sampling is being performed at 165 feet in MW-58BR and at 255 feet in MW-64BR.
[9] If sampling at TW-1 fails to provide adequate data, TW-1 will be removed from the monitoring program in the future and, if necessary, replaced.
[10] Parentheses (X) indicate hexavalent chromium has previously been detected at concentrations greater than 32 micrograms per liter at this location.
[11] Ammonium and nitrite will be monitored for the first year. If not detected within the first year of monitoring, sampling for these analytes will be discontinued. If increases in ammonium or nitrite concentrations are detected in dose response wells, recommendations for continued sampling and potential expansion of the monitoring network for these analytes will be provided.
[12] Pending/future provisional

Frequencies:
T: Potentially monitored continuously via transducer
M: Monthly
Q: Quarterly
SA: Semi-Annually
A: Annually
BE: Biennially
(yr): Frequency for the first year/month/quarter, frequency reduction to be considered thereafter

Table 2.1-3
Compliance Monitoring Program
Groundwater Remedy Operation and Maintenance Manual
Volume 2: Sampling and Monitoring Plan
PG&E Topock Compressor Station, Needles, California

Well ID	Process Control Monitoring Well Category	Analyte Sampling Frequencies [3]			
		Cr(VI)	Cr(T)	Dissolved Byproducts	Water Levels
Compliance Monitoring Wells: Outside Plume					
MW-A	Northern NTH Extraction	Q	SA	---	Q, T
MW-B	Northern NTH Extraction	Q	SA	---	Q, T
MW-I	IRL Byproduct	SA	SA	SA (Mn, As)	Q
MW-J	IRL Byproduct	SA	SA	SA (Mn, As)	Q
MW-O	Riverbank Extraction	Q(yr), SA	Q(yr), SA	Q(yr), SA (Mn, As)	Q, T
MW-P	IRL Dose Response	Q	Q(yr), SA	---	Q
MW-Q	IRL Dose Response	Q	Q(yr), SA	---	Q
MW-S	Water Level Monitoring	A [4]	A [4]	---	Q
MW-U	Water Level Monitoring	BE [5]	BE [5]		Q
MW-V	TCS Loop Byproduct (provisional)	SA	SA	A (As, Mn)	Q
MW-W	Riverbank Extraction; NTH IRZ Downgradient	Q	SA	Q (Mn, As)	Q, T
MW-X	Riverbank Extraction	Q	SA	As needed	Q, T
MW-Y	Riverbank Extraction	Q	SA	As needed	Q, T
MW-Z	Water Level Monitoring	SA	SA		Q
MW-AA	Arsenic Monitoring	---	---	Q (As)	Q
MW-BB	Arsenic Monitoring	---	---	Q (As)	Q
MW-CC	Arsenic Monitoring	---	---	Q (As)	Q
MW-DD	Arsenic Monitoring	---	---	Q (As)	Q
MW-EE	Arsenic Monitoring (pending/future provisional)	---	---	Q (As)	Q
MW-FF	Arsenic Monitoring	---	---	Q (As)	Q
MW-GG	Arsenic Monitoring	---	---	Q (As)	Q
CW-01D	Water Level Monitoring	A [4]	A [4]	---	Q
CW-01M	Water Level Monitoring	A [4]	A [4]	---	Q
CW-02D	IRL Byproduct; Arsenic Monitoring	SA [4]	SA [4]	SA (Mn, As)	Q
CW-02M	IRL Byproduct; Arsenic Monitoring	SA [4]	SA [4]	SA (Mn, As)	Q
CW-03D	IRL Byproduct	SA [4]	SA [4]	SA (Mn, As)	Q
CW-03M	IRL Byproduct	SA [4]	SA [4]	SA (Mn, As)	Q
CW-04D	Water Level Monitoring	A [4]	A [4]	---	Q
CW-04M	Water Level Monitoring	A [4]	A [4]	---	Q
MW-13	IRL Downgradient	SA	SA	---	Q
MW-14*	IRL Dose Response	Q	Q(yr), SA	---	Q
MW-15*	Water Level Monitoring	BE [5]	BE [5]	---	Q
MW-21	NTH IRZ Dose Response	M(yr), Q	Q(yr), SA	---	Q
MW-22 [8]	NTH IRZ Downgradient; Riverbank Extraction	M(yr), Q	Q(yr), SA	SA (Mn, As)	Q, T
MW-23-080*	East Ravine Extraction	Q	SA	---	Q, T
MW-24BR*	Water Level Monitoring	Q [5]	Q [5]	---	Q
MW-27-020	Riverbank Extraction	Q	SA	Q (Mn, As)	Q, T
MW-27-060	Riverbank Extraction	Q	SA	Q (Mn, As)	Q, T
MW-27-085	Riverbank Extraction	Q	SA	Q (Mn, As)	Q, T
MW-28-025	Riverbank Extraction	Q	SA	Q (Mn, As)	Q, T
MW-28-090	Riverbank Extraction	Q	SA	Q (Mn, As)	Q, T
MW-29	Riverbank Extraction	Q	SA	Q (Mn, As)	Q, T
MW-30-030	NTH IRZ Downgradient; Riverbank Extraction	Q	SA	Q (Mn, As)	Q, T
MW-30-050*	NTH IRZ Downgradient; Riverbank Extraction	Q	SA	Q (Mn, As)	Q, T
MW-31-135*	Water Level Monitoring	BE [7]	BE [7]	---	Q
MW-32-20	NTH IRZ Downgradient; Riverbank Extraction	Q	SA	Q (Mn, As)	Q, T
MW-32-35	NTH IRZ Downgradient; Riverbank Extraction	Q	SA	Q (Mn, As)	Q, T
MW-33-040	NTH IRZ Downgradient; Riverbank Extraction	Q	SA	Q (Mn, As)	Q, T
MW-33-090	NTH IRZ Downgradient; Riverbank Extraction	Q	SA	Q (Mn, As)	Q, T
MW-33-150	NTH IRZ Downgradient; Riverbank Extraction	Q	SA	Q (Mn, As)	Q, T
MW-33-210	NTH IRZ Downgradient; Riverbank Extraction	Q	SA	Q (Mn, As)	Q, T
MW-34-055	Riverbank Extraction	Q	SA	Q (Mn, As)	Q, T
MW-34-080*	Riverbank Extraction	Q	SA	Q (Mn, As)	Q, T
MW-35-60*	Northern NTH Extraction	Q	SA	---	Q, T
MW-35-135*	Northern NTH Extraction	Q	SA	---	Q, T
MW-36-020	NTH IRZ Downgradient; Riverbank Extraction	Q	SA	Q (Mn, As)	Q, T
MW-36-040	NTH IRZ Downgradient; Riverbank Extraction	Q	SA	Q (Mn, As)	Q, T
MW-36-050	NTH IRZ Downgradient; Riverbank Extraction	Q	SA	Q (Mn, As)	Q, T
MW-36-070	NTH IRZ Downgradient; Riverbank Extraction	Q	SA	Q (Mn, As)	Q, T
MW-36-090*	NTH IRZ Downgradient; Riverbank Extraction	Q	SA	Q (Mn, As)	Q, T
MW-37S	IRL Downgradient	SA	SA	---	Q
MW-39-040	NTH IRZ Downgradient; Riverbank Extraction	Q	SA	Q (Mn, As)	Q, T
MW-39-050*	NTH IRZ Downgradient; Riverbank Extraction	Q	SA	Q (Mn, As)	Q, T
MW-39-060*	NTH IRZ Downgradient; Riverbank Extraction	Q	SA	Q (Mn, As)	Q, T
MW-39-070*	NTH IRZ Downgradient; Riverbank Extraction	Q	SA	Q (Mn, As)	Q, T
MW-39-080*	NTH IRZ Downgradient; Riverbank Extraction	Q	SA	Q (Mn, As)	Q, T
MW-40S	Water Level Monitoring	BE [5]	BE [5]	---	Q
MW-41D	IRL Downgradient	SA	SA	---	Q

Table 2.1-3
Compliance Monitoring Program
Groundwater Remedy Operation and Maintenance Manual
Volume 2: Sampling and Monitoring Plan
PG&E Topock Compressor Station, Needles, California

Well ID	Process Control Monitoring Well Category	Analyte Sampling Frequencies [3]			
		Cr(VI)	Cr(T)	Dissolved Byproducts	Water Levels
MW-41M	IRL Downgradient	SA	SA	---	Q
MW-41S	IRL Downgradient	SA	SA	---	Q
MW-42-030	NTH IRZ Downgradient; Riverbank Extraction	Q	SA	Q (Mn, As)	Q, T
MW-42-055	NTH IRZ Downgradient; Riverbank Extraction	Q	SA	Q (Mn, As)	Q, T
MW-42-065	NTH IRZ Downgradient; Riverbank Extraction	Q	SA	Q (Mn, As)	Q, T
MW-43-025	NTH IRZ Downgradient; Riverbank Extraction	Q	SA	Q (Mn, As)	Q, T
MW-43-075	NTH IRZ Downgradient; Riverbank Extraction	Q	SA	Q (Mn, As)	Q, T
MW-43-090	NTH IRZ Downgradient; Riverbank Extraction	Q	SA	Q (Mn, As)	Q, T
MW-44-070	NTH IRZ Downgradient; Riverbank Extraction	Q	SA	Q (Mn, As)	Q, T
MW-46-205	NTH IRZ Downgradient; Riverbank Extraction	Q	SA	Q (Mn, As)	Q, T
MW-47-055*	NTH IRZ Dose Response	M(yr), Q	Q(yr), SA	---	Q
MW-47-115	NTH IRZ Dose Response	M(yr), Q	Q(yr), SA	---	Q
MW-48	TWB Extraction	Q	Q	---	Q
MW-49-135	Riverbank Extraction	Q	SA	Q(yr), SA (Mn, As)	Q, T
MW-49-275	Riverbank Extraction	Q	SA	Q(yr), SA (Mn, As)	Q, T
MW-49-365	Riverbank Extraction	Q	SA	Q(yr), SA (Mn, As)	Q, T
MW-50-095*	Water Level Monitoring	SA [5]	A [5]	---	Q
MW-52D	NTH IRZ Downgradient; Riverbank Extraction	Q	SA	Q (Mn, As)	Q, T
MW-52M	NTH IRZ Downgradient; Riverbank Extraction	Q	SA	Q (Mn, As)	Q, T
MW-52S	NTH IRZ Downgradient; Riverbank Extraction	Q	SA	Q (Mn, As)	Q, T
MW-53D	NTH IRZ Downgradient; Riverbank Extraction	Q	SA	Q (Mn, As)	Q, T
MW-53M	NTH IRZ Downgradient; Riverbank Extraction	Q	SA	Q (Mn, As)	Q, T
MW-53S [10]	NTH IRZ Downgradient; Riverbank Extraction	Q	SA	Q (Mn, As)	Q, T
MW-54-085	Riverbank Extraction	A	A	Q(yr), SA (Mn, As)	Q, T
MW-54-140	Riverbank Extraction	A	A	Q(yr), SA (Mn, As)	Q, T
MW-54-195	Riverbank Extraction	A	A	Q(yr), SA (Mn, As)	Q, T
MW-55-045	Riverbank Extraction	A	A	Q(yr), SA (Mn, As)	Q, T
MW-55-120	Riverbank Extraction	A	A	Q(yr), SA (Mn, As)	Q, T
MW-56D	Riverbank and East Ravine Extraction	A	A	Q(yr), SA (Mn, As)	Q, T
MW-56M	Riverbank and East Ravine Extraction	A	A	Q(yr), SA (Mn, As)	Q, T
MW-56S	Riverbank and East Ravine Extraction	A	A	Q(yr), SA (Mn, As)	Q, T
MW-57-185	East Ravine Extraction	Q	SA	---	Q, T
MW-58-065	East Ravine Extraction	Q	SA	---	Q, T
MW-58-115	East Ravine Extraction	Q	SA	---	Q, T
MW-58-205	East Ravine Extraction	Q	SA	---	Q, T
MW-58BR [11]	East Ravine Extraction	Q	SA	---	Q
MW-58-115	East Ravine Extraction	Q	SA	---	Q, T
MW-58-205	East Ravine Extraction	Q	SA	---	Q, T
MW-60BR-245*	Water Level Monitoring	BE	BE	---	Q
MW-62-190*	East Ravine Extraction	Q	SA	---	Q, T
MW-63-065	East Ravine Extraction	Q	SA	---	Q, T
MW-64-150	East Ravine Extraction	Q	SA	---	Q, T
MW-64-205	East Ravine Extraction	Q	SA	---	Q, T
MW-64-260	East Ravine Extraction	Q	SA	---	Q, T
MW-64BR* [11]	East Ravine Extraction	Q	SA	---	Q
MW-66BR-270	Water Level Monitoring	A [6]	A [6]	---	Q
MW-68BR-280	TWB Extraction	Q	SA	---	Q, T
MW-70-105	East Ravine Extraction	Q	SA	---	Q, T
MW-71-35	NTH IRZ Dose Response	M(yr), Q	Q(yr), SA	---	Q
MW-72BR-200	East Ravine Extraction	Q	SA	---	Q
MW-74-240	Water Level Monitoring	A [6]	A [6]	---	Q
OW-01D	Arsenic Monitoring	SA [4]	SA [4]	Q (As)	Q
OW-01M	Arsenic Monitoring	SA [4]	SA [4]	Q (As)	Q
OW-01S	Arsenic Monitoring	SA [4]	SA [4]	Q (As)	Q
OW-02D	Arsenic Monitoring	SA [4]	SA [4]	Q (As)	Q
OW-02M	Arsenic Monitoring	SA [4]	SA [4]	Q (As)	Q
OW-02S*	Arsenic Monitoring	SA [4]	SA [4]	Q (As)	Q
OW-05D	Water Level Monitoring	SA [4]	SA [4]	---	Q
OW-05M	Water Level Monitoring	SA [4]	SA [4]	---	Q
OW-05S*	Water Level Monitoring	SA [4]	SA [4]	---	Q
PGE-07(BR)	Water Level Monitoring	Q	Q	---	Q
PGE-08	Water Level Monitoring	A	A	---	Q
PT-5M	NTH IRZ Downgradient; Riverbank Extraction	Q	SA	Q (Mn, As)	Q, T
PT-5S	NTH IRZ Downgradient; Riverbank Extraction	Q	SA	Q (Mn, As)	Q, T
TW-4*	NTH IRZ Dose Response	M(yr), Q	Q(yr), SA	Q (Mn, As)	Q, T
TW-5	Water Level Monitoring	BE	BE	---	Q, T
Unspecified slant wells	Riverbank Extraction (provisional)	Q	SA	Q (Mn, As)	Q, T

Table 2.1-3
Compliance Monitoring Program
Groundwater Remedy Operation and Maintenance Manual
Volume 2: Sampling and Monitoring Plan
PG&E Topock Compressor Station, Needles, California

Well ID	Process Control Monitoring Well Category	Analyte Sampling Frequencies [3]			
		Cr(VI)	Cr(T)	Dissolved Byproducts	Water Levels
Compliance Monitoring Wells: Inside Plume					
MW-C	NTH IRZ Dose Response	M(yr), Q	Q(yr), SA	---	Q
MW-D	NTH IRZ Dose Response	M(yr), Q	Q(yr), SA	---	Q
MW-E	NTH IRZ Dose Response	M(yr), Q	Q(yr), SA	---	Q
MW-F	NTH IRZ Dose Response	M(yr), Q	Q(yr), SA	---	Q
MW-G	NTH IRZ Dose Response	M(yr), Q	Q(yr), SA	---	Q
MW-H	NTH IRZ Downgradient; Riverbank Extraction	Q	SA	---	Q, T
MW-K	TWB Extraction	Q	SA	---	Q, T
MW-L	Water Level Monitoring	BE [7]	BE [7]	---	Q
MW-M	IRL Downgradient	SA	SA	---	Q
MW-N	Water Level Monitoring	BE [7]	BE [7]	---	Q
MW-R	IRL Downgradient	SA	SA	---	Q
MW-T	East Ravine Extraction	Q	SA	---	Q, T
MW-HH	Arsenic Monitoring	---	---	Q (As)	Q
MW-II	Arsenic Monitoring; TCS Loop Byproduct	---	---	Q (As), A (Mn)	Q
MW-9	TCS Loop Byproduct	A	A	A (As, Mn)	Q
MW-10	TCS Loop Byproduct	A [7]	A [7]	A (As, Mn)	Q
MW-10D	TCS Loop Byproduct	A	A	A (As, Mn)	Q
MW-11	TCS Loop Byproduct	BE [7]	BE [7]	BE (As, Mn)	Q
MW-11D	TCS Loop Byproduct	BE	BE	BE (As, Mn)	Q
MW-12	TWB Extraction	Q	SA	---	Q, T
MW-19	Water Level Monitoring	BE [7]	BE [7]	---	Q
MW-20-070	NTH IRZ Dose Response	M(yr), Q	SA	---	Q
MW-20-100	NTH IRZ Dose Response	M(yr), Q	SA	---	Q
MW-20-130	NTH IRZ Dose Response	M(yr), Q	SA	---	Q
MW-23-060	East Ravine Extraction	Q	SA	---	Q, T
MW-24A	Water Level Monitoring	Q	Q	---	Q
MW-24B	Water Level Monitoring	BE [7]	BE [7]	---	Q
MW-25	Water Level Monitoring	BE [7]	BE [7]	---	Q
MW-26	NTH IRZ Dose Response	M(yr), Q	Q(yr), SA	---	Q
MW-31-060	Water Level Monitoring	BE [7]	BE [7]	---	Q
MW-34-100	Riverbank Extraction	Q	SA	---	Q, T
MW-36-100	NTH IRZ Downgradient; Riverbank Extraction	Q	SA	---	Q, T
MW-37D	IRL Downgradient	SA	SA	---	Q
MW-38D	TCS Loop Byproduct	BE [7]	BE [7]	BE (As, Mn)	Q
MW-38S	TCS Loop Byproduct	BE [7]	BE [7]	BE (As, Mn)	Q
MW-39-100	NTH IRZ Downgradient; Riverbank Extraction	Q	SA	---	Q, T
MW-40D	Water Level Monitoring	BE [7]	BE [7]	---	Q
MW-44-115	NTH IRZ Downgradient; Riverbank Extraction	Q	SA	---	Q, T
MW-44-125	NTH IRZ Downgradient; Riverbank Extraction	Q	SA	---	Q, T
MW-45-095 [9]	Riverbank Extraction	Q	SA	---	Q, T
MW-46-175	NTH IRZ Downgradient; Riverbank Extraction	Q	SA	---	Q, T
MW-50-200	Water Level Monitoring	BE [7]	BE [7]	---	Q
MW-51	NTH IRZ Dose Response	M(yr), Q	Q(yr), SA	---	Q
MW-57-050	East Ravine Extraction	Q	SA	---	Q, T
MW-57-070	East Ravine Extraction	Q	SA	---	Q, T
MW-59-100	TWB Extraction	Q	SA	---	Q, T
MW-60-125	Water Level Monitoring	BE [7]	BE [7]	---	Q
MW-61-110	East Ravine Extraction	Q	SA	---	Q
MW-62-065	East Ravine Extraction	Q	SA	---	Q
MW-62-110	East Ravine Extraction	Q	SA	---	Q
MW-65-160	Water Level Monitoring	SA [4]	A [4]	---	Q
MW-65-225	Water Level Monitoring	A [4]	A [4]	---	Q
MW-66-165	TCS Dose Response	Q	Q(yr), SA	---	Q
MW-66-230	TCS Dose Response	Q	Q(yr), SA	---	Q
MW-67-185	TCS Downgradient and TWB Extraction	Q	SA	---	Q, T
MW-67-225	TCS Downgradient and TWB Extraction	Q	SA	---	Q, T
MW-67-260	TCS Downgradient and TWB Extraction	Q	SA	---	Q, T
MW-68-180	TWB Extraction	Q	SA	---	Q, T
MW-68-240	TWB Extraction	Q	SA	---	Q, T
MW-69-195	Water Level Monitoring	BE [7]	BE [7]	---	Q
MW-70-105	East Ravine Extraction	Q	SA	---	Q, T
MW-70BR-D	East Ravine Extraction	Q	SA	---	Q, T
MW-72-80	East Ravine Extraction	Q	SA	---	Q, T
MW-73-80	East Ravine Extraction	Q	SA	---	Q, T
PT-5D	NTH IRZ Downgradient; Riverbank Extraction	Q	SA	---	Q, T
PT-8D	Water Level Monitoring	BE [7]	BE [7]	---	Q
PT-9D	Water Level Monitoring	BE [7]	BE [7]	---	Q
PT-9M	Water Level Monitoring	BE [7]	BE [7]	---	Q

Table 2.1-3
Compliance Monitoring Program
Groundwater Remedy Operation and Maintenance Manual
Volume 2: Sampling and Monitoring Plan
PG&E Topock Compressor Station, Needles, California

Well ID	Process Control Monitoring Well Category	Analyte Sampling Frequencies [3]			
		Cr(VI)	Cr(T)	Dissolved Byproducts	Water Levels
PT-9S	Water Level Monitoring	BE [7]	BE [7]	---	Q
TW-1	TCS Dose Response	Q	Q(yr), SA	---	Q
TW-2D	NTH IRZ Dose Response	M(yr), Q	Q(yr), SA	---	Q, T
TW-2S	NTH IRZ Dose Response	M(yr), Q	Q(yr), SA	---	Q, T
TW-3D	NTH IRZ Dose Response	M(yr), Q	Q(yr), SA	---	Q, T
Surface Water Monitoring Locations					
C-NR4 (River channel)	Riverbank Extraction	Q	SA	Q (Mn, As)	Q
C-NR3 (River channel)	Riverbank Extraction	Q	SA	Q (Mn, As)	Q
C-NR1 (River channel)	Riverbank Extraction	Q	SA	Q (Mn, As)	Q
C-CON (River channel)	Riverbank Extraction	Q	SA	Q (Mn, As)	Q
C-MAR (River channel)	Riverbank Extraction	Q	SA	Q (Mn, As)	Q
C-R27 (River channel)	Riverbank Extraction	Q	SA	Q (Mn, As)	Q
C-BNS (River channel)	Riverbank Extraction	Q	SA	Q (Mn, As)	Q
C-R-22A (River channel)	Riverbank and East Ravine Extraction	Q	SA	Q (Mn, As)	Q
C-I-3 (River channel)	Riverbank and East Ravine Extraction	Q	SA	Q (Mn, As)	Q
C-TAZ (River channel)	Riverbank and East Ravine Extraction	Q	SA	Q (Mn, As)	Q
RBB (Shoreline)	Riverbank Extraction	Q	SA	Q (Mn, As)	Q
R-19 (Shoreline)	Riverbank Extraction	Q	SA	Q (Mn, As)	Q
R-28 (Shoreline)	Riverbank Extraction	Q	SA	Q (Mn, As)	Q
R-63 (Shoreline)	Riverbank and East Ravine Extraction	Q	SA	Q (Mn, As)	Q
SW-1 (East Ravine)	Riverbank and East Ravine Extraction	Q	SA	Q (Mn, As)	Q
SW-2 (East Ravine)	Riverbank and East Ravine Extraction	Q	SA	Q (Mn, As)	Q

Notes:
Asterisk (*) indicates Cr(VI) has previously been detected at concentrations greater than 32 micrograms per liter at this location.

[1] Sampling program will be re-evaluated after two years of operation.

[2] Timeframes are based on nominal baseline values and current solute transport model predictions. These estimates may be updated as the system is installed and baseline sampling is conducted, and continually adjusted during the remedy as the solute transport model is refined. The basis for these ranges and maximum thresholds are described in the text.

[3] Unless otherwise indicated, sampling frequencies are based on the Process Control Monitoring Program sampling frequencies.

[4] Based on Process Control Monitoring Program sampling frequency for analytes other than Cr(VI) and Cr(T).

[5] Based on current sampling frequency

[6] Not regularly sampled currently and not in Process Control Monitoring Program for sample collection.

[7] Based on anticipated treatment timeframe

[8] A deeper boring and replacement monitoring well will be constructed at this location if the alluvium is deeper in this area.

[9] Two wells MW-45-095a and MW-45-095b exist at this location and are screened within the same interval. MW-45-095a is currently active and MW-45-095b is considered inactive.

[10] Well is not operational.

[11] As approved in the first quarter of 2013, packers have been removed and single zone micro-purge sampling is being performed at 165 feet in MW-58BR and at 255 feet in MW-64BR.

Frequencies:
T: Potentially monitored continuously via transducer
M: Monthly
Q: Quarterly
SA: Semi-Annually
A: Annually
BE: Biennially
(yr): Frequency for the first year

Analytes:
Cr(VI): Chromium (VI)
Cr(T): Total dissolved chromium
Mn: Manganese
As: Arsenic

Abbreviations:
ER East Ravine
IRL Inner Recirculation Loop
IRZ In-situ Reactive Zone
NTH National Trails Highway
TCS Topock Compressor Station

Table 2.1-4
Model Predicted Concentration Trends - First Year
Groundwater Remedy Operation and Maintenance Manual
Volume 2: Sampling and Monitoring Plan
PG&E Topock Compressor Station, Needles, California

Monitoring Wells (Inside Plume)	Model Predicted Cr(VI) Concentration Trend
6 months after Freshwater, IRL Loop, and TCS Loop Start-up	
NTH IRZ Dose Response Wells	
MW-C	Less than 32 ppb
MW-D	Less than 32 ppb
MW-E	Less than 32 ppb
MW-F	Less than 32 ppb
MW-G	Less than 32 ppb
MW-20-070	Less than 32 ppb
MW-20-100	Less than 32 ppb
MW-20-130	Less than 32 ppb
MW-26	Less than 32 ppb
MW-51	Less than 32 ppb
TW-2D	Less than 32 ppb
TW-2S	Less than 32 ppb
TW-3D	Less than 32 ppb
NTH IRZ Downgradient Monitoring Wells	
MW-H	Increase before decreasing below 32 ppb
MW-36-100	Increasing
MW-39-100	Increasing
MW-44-115	Increasing
MW-44-125	Increasing
MW-46-175	Increasing
PT-5D	May increase before decreasing
Riverbank Monitoring Wells	
MW-34-100	Steady
MW-45-095	Increasing
IRL Downgradient Monitoring Wells	
MW-M	Decreasing
MW-R	Less than 32 ppb
MW-37D	Decreasing
TCS Dose Response and Downgradient MWs	
MW-66-165	Less than 32 ppb
MW-66-230	Less than 32 ppb
MW-67-185	Decreasing
MW-67-225	Decreasing
MW-67-260	May increase before decreasing
TW-1	Less than 32 ppb
TWB Extraction Monitoring Wells	
MW-K	Increasing
MW-12	Increasing
MW-59-100	Decreasing
MW-68-180	Decreasing
MW-68-240	May increase before decreasing

Table 2.1-4
Model Predicted Concentration Trends - First Year
Groundwater Remedy Operation and Maintenance Manual
Volume 2: Sampling and Monitoring Plan
PG&E Topock Compressor Station, Needles, California

Monitoring Wells (Inside Plume)	Model Predicted Cr(VI) Concentration Trend
East Ravine Extraction Monitoring Wells	
MW-57-050	Increasing
MW-57-070	Increasing
MW-61-110	Increasing
MW-62-065	Decreasing
MW-62-110	Decreasing
MW-70-105	Decreasing
MW-70BR-D	Decreasing
MW-72-80	Decreasing
MW-73-80	Less than 32 ppb
Other Monitoring Wells	Generally sampled biennially, data will not be available for trending until two years of FW/IRL/TCS operation
12 months after Freshwater, IRL Loop, and TCS Loop Start-up	
NTH IRZ Dose Response Wells	
MW-C	Less than 32 ppb
MW-D	Less than 32 ppb
MW-E	Less than 32 ppb
MW-F	Less than 32 ppb
MW-G	Less than 32 ppb
MW-20-070	Less than 32 ppb
MW-20-100	Less than 32 ppb
MW-20-130	Less than 32 ppb
MW-26	Less than 32 ppb
MW-51	Less than 32 ppb
TW-2D	Less than 32 ppb
TW-2S	Less than 32 ppb
TW-3D	Less than 32 ppb
NTH IRZ Downgradient Monitoring Wells	
MW-H	Less than 32 ppb
MW-36-100	Increasing
MW-39-100	Decreasing
MW-44-115	Decreasing
MW-44-125	Decreasing
MW-46-175	Less than 32 ppb
PT-5D	Decreasing
Riverbank Monitoring Wells	
MW-34-100	Steady
MW-45-095	Increasing
IRL Downgradient Monitoring Wells	
MW-M	Decreasing
MW-R	Less than 32 ppb
MW-37D	Decreasing

Table 2.1-4
Model Predicted Concentration Trends - First Year
Groundwater Remedy Operation and Maintenance Manual
Volume 2: Sampling and Monitoring Plan
PG&E Topock Compressor Station, Needles, California

Monitoring Wells (Inside Plume)	Model Predicted Cr(VI) Concentration Trend
TCS Dose Response and Downgradient MWs	
MW-66-165	Less than 32 ppb
MW-66-230	Less than 32 ppb
MW-67-185	Decreasing
MW-67-225	Decreasing
MW-67-260	Decreasing
TW-1	Less than 32 ppb
TWB Extraction Monitoring Wells	
MW-K	Increasing
MW-12	Increasing
MW-59-100	Decreasing
MW-68-180	Decreasing
MW-68-240	Decreasing
East Ravine Extraction Monitoring Wells	
MW-57-050	Increasing
MW-57-070	Increasing
MW-61-110	Increasing
MW-62-065	Decreasing
MW-62-110	Decreasing
MW-70-105	Less than 32 ppb
MW-70BR-D	Decreasing
MW-72-80	Less than 32 ppb
MW-73-80	Less than 32 ppb
Other Monitoring Wells	Generally sampled biennially, data will not be available for trending until two years of FW/IRL/TCS operation

Abbreviations:

Cr(VI)	hexavalent chromium
FW	Freshwater
IRL	Inner Recirculation Loop
IRZ	In situ Reactive Zone
NTH	National Trails Highway
ppb	parts per billion
TCS	Topock Compressor Station
TWB	Transwestern Bench

Table 2.1-5
Model Predicted Concentration Trends - Five Year Reviews
Groundwater Remedy Operation and Maintenance Manual
Volume 2: Sampling and Monitoring Plan
PG&E Topock Compressor Station, Needles, California

Monitoring Wells (Inside Plume)	Model Predicted Cr(VI) Concentration Trend
First 5-Year Review	
NTH IRZ Dose Response Wells	
MW-C	Less than 32 ppb
MW-D	Less than 32 ppb
MW-E	Less than 32 ppb
MW-F	Less than 32 ppb
MW-G	Less than 32 ppb
MW-20-070	Less than 32 ppb
MW-20-100	Less than 32 ppb
MW-20-130	Less than 32 ppb
MW-26	Less than 32 ppb
MW-51	Less than 32 ppb
TW-2D	Less than 32 ppb
TW-2S	Less than 32 ppb
TW-3D	Less than 32 ppb
NTH IRZ Downgradient Monitoring Wells	
MW-H	Less than 32 ppb
MW-36-100	Increasing
MW-39-100	Decreasing
MW-44-115	Decreasing
MW-44-125	Decreasing
MW-46-175	Less than 32 ppb
PT-5D	Decreasing
Riverbank Monitoring Wells	
MW-34-100	Steady
MW-45-095	Increasing
IRL Downgradient Monitoring Wells	
MW-M	Decreasing
MW-R	Less than 32 ppb
MW-37D	Decreasing
TCS Dose Response and Downgradient MWs	
MW-66-165	Less than 32 ppb
MW-66-230	Less than 32 ppb
MW-67-185	Decreasing
MW-67-225	Decreasing
MW-67-260	Decreasing
TW-1	Less than 32 ppb
TWB Extraction Monitoring Wells	
MW-K	Increasing
MW-12	Increasing
MW-59-100	Decreasing
MW-68-180	Decreasing
MW-68-240	Decreasing
East Ravine Extraction Monitoring Wells	
MW-57-050	Increasing
MW-57-070	Increasing
MW-61-110	Increasing
MW-62-065	Decreasing
MW-62-110	Decreasing
MW-70-105	Less than 32 ppb
MW-70BR-D	Decreasing
MW-72-80	Less than 32 ppb
MW-73-80	Less than 32 ppb
Other Monitoring Wells	Generally sampled biennially, data will not be available for trending until two years of FW/IRL/TCS operation

Table 2.1-5
Model Predicted Concentration Trends - Five Year Reviews
Groundwater Remedy Operation and Maintenance Manual
Volume 2: Sampling and Monitoring Plan
PG&E Topock Compressor Station, Needles, California

Monitoring Wells (Inside Plume)	Model Predicted Cr(VI) Concentration Trend
Second 5-Year Review	
NTH IRZ Dose Response Wells	
MW-C	Less than 32 ppb
MW-D	Less than 32 ppb
MW-E	Less than 32 ppb
MW-F	Less than 32 ppb
MW-G	Less than 32 ppb
MW-20-070	Less than 32 ppb
MW-20-100	Less than 32 ppb
MW-20-130	Less than 32 ppb
MW-26	Less than 32 ppb
MW-51	Less than 32 ppb
TW-2D	Less than 32 ppb
TW-2S	Less than 32 ppb
TW-3D	Less than 32 ppb
NTH IRZ Downgradient Monitoring Wells	
MW-H	Less than 32 ppb
MW-36-100	Decreasing
MW-39-100	Less than 32 ppb
MW-44-115	Decreasing
MW-44-125	Decreasing
MW-46-175	Less than 32 ppb
PT-5D	Less than 32 ppb
Riverbank Monitoring Wells	
MW-34-100	Steady
MW-45-095	Decreasing
IRL Downgradient Monitoring Wells	
MW-M	Decreasing
MW-R	Less than 32 ppb
MW-37D	Less than 32 ppb
TCS Dose Response and Downgradient MWs	
MW-66-165	Less than 32 ppb
MW-66-230	Less than 32 ppb
MW-67-185	Less than 32 ppb
MW-67-225	Less than 32 ppb
MW-67-260	Less than 32 ppb
TW-1	Less than 32 ppb
TWB Extraction Monitoring Wells	
MW-K	Decreasing
MW-12	Decreasing
MW-59-100	Decreasing
MW-68-180	Decreasing
MW-68-240	Decreasing
East Ravine Extraction Monitoring Wells	
MW-57-050	Decreasing
MW-57-070	Decreasing
MW-61-110	Less than 32 ppb
MW-62-065	Decreasing
MW-62-110	Decreasing
MW-70-105	Less than 32 ppb
MW-70BR-D	Less than 32 ppb
MW-72-80	Less than 32 ppb
MW-73-80	Less than 32 ppb

Table 2.1-5
Model Predicted Concentration Trends - Five Year Reviews
Groundwater Remedy Operation and Maintenance Manual
Volume 2: Sampling and Monitoring Plan
PG&E Topock Compressor Station, Needles, California

Monitoring Wells (Inside Plume)	Model Predicted Cr(VI) Concentration Trend
Other Monitoring Wells	
MW-L	Decreasing
MW-N	Decreasing
MW-10	Decreasing or less than 32 ppb
MW-11	Decreasing
MW-19	Decreasing
MW-24B	Decreasing
MW-25	Decreasing
MW-31-060	Decreasing
MW-38D	Decreasing
MW-38S	Decreasing
MW-40D	Decreasing
MW-50-200	Decreasing
MW-60-125	Less than 32 ppb
MW-65-160	Less than 32 ppb
MW-65-225	Less than 32 ppb
MW-69-195	Less than 32 ppb
PT-8D	Decreasing
PT-9D	Decreasing
PT-9M	Decreasing
PT-9S	Decreasing
MW-HH	Less than 32 ppb
MW-II	Less than 32 ppb
MW-9	Less than 32 ppb
MW-24A	Decreasing
MW-10D	Less than 32 ppb
MW-11D	Decreasing
Third 5-Year Review	
NTH IRZ Dose Response Wells	
MW-C	Less than 32 ppb
MW-D	Less than 32 ppb
MW-E	Less than 32 ppb
MW-F	Less than 32 ppb
MW-G	Less than 32 ppb
MW-20-070	Less than 32 ppb
MW-20-100	Less than 32 ppb
MW-20-130	Less than 32 ppb
MW-26	Less than 32 ppb
MW-51	Less than 32 ppb
TW-2D	Less than 32 ppb
TW-2S	Less than 32 ppb
TW-3D	Less than 32 ppb
NTH IRZ Downgradient Monitoring Wells	
MW-H	Less than 32 ppb
MW-36-100	Less than 32 ppb
MW-39-100	Less than 32 ppb
MW-44-115	Less than 32 ppb
MW-44-125	Less than 32 ppb
MW-46-175	Less than 32 ppb
PT-5D	Less than 32 ppb
Riverbank Monitoring Wells	
MW-34-100	Decreasing
MW-45-095	Less than 32 ppb

Table 2.1-5
Model Predicted Concentration Trends - Five Year Reviews
Groundwater Remedy Operation and Maintenance Manual
Volume 2: Sampling and Monitoring Plan
PG&E Topock Compressor Station, Needles, California

Monitoring Wells (Inside Plume)	Model Predicted Cr(VI) Concentration Trend
IRL Downgradient Monitoring Wells	
MW-M	Decreasing or less than 32 ppb
MW-R	Less than 32 ppb
MW-37D	Less than 32 ppb
TCS Dose Response and Downgradient MWs	
MW-66-165	Less than 32 ppb
MW-66-230	Less than 32 ppb
MW-67-185	Less than 32 ppb
MW-67-225	Less than 32 ppb
MW-67-260	Less than 32 ppb
TW-1	Less than 32 ppb
TWB Extraction Monitoring Wells	
MW-K	Decreasing
MW-12	Decreasing
MW-59-100	Decreasing
MW-68-180	Decreasing
MW-68-240	Decreasing
East Ravine Extraction Monitoring Wells	
MW-57-050	Decreasing
MW-57-070	Decreasing
MW-61-110	Less than 32 ppb
MW-62-065	Decreasing
MW-62-110	Decreasing
MW-70-105	Less than 32 ppb
MW-70BR-D	Less than 32 ppb
MW-72-80	Less than 32 ppb
MW-73-80	Less than 32 ppb
Other Monitoring Wells	
MW-L	Decreasing
MW-N	Decreasing
MW-10	Less than 32 ppb
MW-11	Decreasing
MW-19	Decreasing
MW-24B	Decreasing
MW-25	Decreasing
MW-31-060	Decreasing
MW-38D	Decreasing
MW-38S	Decreasing
MW-40D	Less than 32 ppb
MW-50-200	Decreasing
MW-60-125	Less than 32 ppb
MW-65-160	Less than 32 ppb
MW-65-225	Less than 32 ppb
MW-69-195	Less than 32 ppb
PT-8D	Decreasing
PT-9D	Decreasing
PT-9M	Decreasing
PT-9S	Decreasing
MW-HH	Less than 32 ppb
MW-II	Less than 32 ppb
MW-9	Less than 32 ppb
MW-24A	Decreasing
MW-10D	Less than 32 ppb
MW-11D	Decreasing

Table 2.1-5
Model Predicted Concentration Trends - Five Year Reviews
Groundwater Remedy Operation and Maintenance Manual
Volume 2: Sampling and Monitoring Plan
PG&E Topock Compressor Station, Needles, California

Monitoring Wells (Inside Plume)	Model Predicted Cr(VI) Concentration Trend
Fourth 5-Year Review	
NTH IRZ Dose Response Wells	
MW-C	Less than 32 ppb
MW-D	Less than 32 ppb
MW-E	Less than 32 ppb
MW-F	Less than 32 ppb
MW-G	Less than 32 ppb
MW-20-070	Less than 32 ppb
MW-20-100	Less than 32 ppb
MW-20-130	Less than 32 ppb
MW-26	Less than 32 ppb
MW-51	Less than 32 ppb
TW-2D	Less than 32 ppb
TW-2S	Less than 32 ppb
TW-3D	Less than 32 ppb
NTH IRZ Downgradient Monitoring Wells	
MW-H	Less than 32 ppb
MW-36-100	Less than 32 ppb
MW-39-100	Less than 32 ppb
MW-44-115	Less than 32 ppb
MW-44-125	Less than 32 ppb
MW-46-175	Less than 32 ppb
PT-5D	Less than 32 ppb
Riverbank Monitoring Wells	
MW-34-100	Decreasing
MW-45-095	Less than 32 ppb
IRL Downgradient Monitoring Wells	
MW-M	Less than 32 ppb
MW-R	Less than 32 ppb
MW-37D	Less than 32 ppb
TCS Dose Response and Downgradient MWs	
MW-66-165	Less than 32 ppb
MW-66-230	Less than 32 ppb
MW-67-185	Less than 32 ppb
MW-67-225	Less than 32 ppb
MW-67-260	Less than 32 ppb
TW-1	Less than 32 ppb
TWB Extraction Monitoring Wells	
MW-K	Decreasing
MW-12	Decreasing
MW-59-100	Decreasing
MW-68-180	Less than 32 ppb
MW-68-240	Less than 32 ppb
East Ravine Extraction Monitoring Wells	
MW-57-050	Decreasing
MW-57-070	Decreasing
MW-61-110	Less than 32 ppb
MW-62-065	Decreasing
MW-62-110	Decreasing
MW-70-105	Less than 32 ppb
MW-70BR-D	Less than 32 ppb
MW-72-80	Less than 32 ppb
MW-73-80	Less than 32 ppb

Table 2.1-5
Model Predicted Concentration Trends - Five Year Reviews
Groundwater Remedy Operation and Maintenance Manual
Volume 2: Sampling and Monitoring Plan
PG&E Topock Compressor Station, Needles, California

Monitoring Wells (Inside Plume)	Model Predicted Cr(VI) Concentration Trend
Other Monitoring Wells	
MW-L	Decreasing or less than 32 ppb
MW-N	Decreasing
MW-10	Less than 32 ppb
MW-11	Less than 32 ppb
MW-19	Less than 32 ppb
MW-24B	Decreasing
MW-25	Decreasing
MW-31-060	Decreasing
MW-38D	Less than 32 ppb
MW-38S	Less than 32 ppb
MW-40D	Less than 32 ppb
MW-50-200	Decreasing
MW-60-125	Less than 32 ppb
MW-65-160	Less than 32 ppb
MW-65-225	Less than 32 ppb
MW-69-195	Less than 32 ppb
PT-8D	Decreasing
PT-9D	Decreasing
PT-9M	Decreasing
PT-9S	Decreasing
MW-HH	Less than 32 ppb
MW-II	Less than 32 ppb
MW-9	Less than 32 ppb
MW-24A	Less than 32 ppb
MW-10D	Less than 32 ppb
MW-11D	Less than 32 ppb
Fifth 5-Year Review	
NTH IRZ Dose Response Wells	
MW-C	Less than 32 ppb
MW-D	Less than 32 ppb
MW-E	Less than 32 ppb
MW-F	Less than 32 ppb
MW-G	Less than 32 ppb
MW-20-070	Less than 32 ppb
MW-20-100	Less than 32 ppb
MW-20-130	Less than 32 ppb
MW-26	Less than 32 ppb
MW-51	Less than 32 ppb
TW-2D	Less than 32 ppb
TW-2S	Less than 32 ppb
TW-3D	Less than 32 ppb
NTH IRZ Downgradient Monitoring Wells	
MW-H	Less than 32 ppb
MW-36-100	Less than 32 ppb
MW-39-100	Less than 32 ppb
MW-44-115	Less than 32 ppb
MW-44-125	Less than 32 ppb
MW-46-175	Less than 32 ppb
PT-5D	Less than 32 ppb
Riverbank Monitoring Wells	
MW-34-100	Less than 32 ppb
MW-45-095	Less than 32 ppb

Table 2.1-5
Model Predicted Concentration Trends - Five Year Reviews
Groundwater Remedy Operation and Maintenance Manual
Volume 2: Sampling and Monitoring Plan
PG&E Topock Compressor Station, Needles, California

Monitoring Wells (Inside Plume)	Model Predicted Cr(VI) Concentration Trend
IRL Downgradient Monitoring Wells	
MW-M	Less than 32 ppb
MW-R	Less than 32 ppb
MW-37D	Less than 32 ppb
TCS Dose Response and Downgradient MWs	
MW-66-165	Less than 32 ppb
MW-66-230	Less than 32 ppb
MW-67-185	Less than 32 ppb
MW-67-225	Less than 32 ppb
MW-67-260	Less than 32 ppb
TW-1	Less than 32 ppb
TWB Extraction Monitoring Wells	
MW-K	Decreasing or less than 32 ppb
MW-12	Less than 32 ppb
MW-59-100	Decreasing
MW-68-180	Less than 32 ppb
MW-68-240	Less than 32 ppb
East Ravine Extraction Monitoring Wells	
MW-57-050	Decreasing
MW-57-070	Decreasing
MW-61-110	Less than 32 ppb
MW-62-065	Decreasing
MW-62-110	Decreasing
MW-70-105	Less than 32 ppb
MW-70BR-D	Less than 32 ppb
MW-72-80	Less than 32 ppb
MW-73-80	Less than 32 ppb
Other Monitoring Wells	
MW-L	Less than 32 ppb
MW-N	Decreasing
MW-10	Less than 32 ppb
MW-11	Less than 32 ppb
MW-19	Less than 32 ppb
MW-24B	Decreasing
MW-25	Decreasing
MW-31-060	Less than 32 ppb
MW-38D	Less than 32 ppb
MW-38S	Less than 32 ppb
MW-40D	Less than 32 ppb
MW-50-200	Decreasing
MW-60-125	Less than 32 ppb
MW-65-160	Less than 32 ppb
MW-65-225	Less than 32 ppb
MW-69-195	Less than 32 ppb
PT-8D	Decreasing
PT-9D	Decreasing
PT-9M	Decreasing
PT-9S	Decreasing
MW-HH	Less than 32 ppb
MW-II	Less than 32 ppb
MW-9	Less than 32 ppb
MW-24A	Less than 32 ppb
MW-10D	Less than 32 ppb
MW-11D	Less than 32 ppb

Table 2.1-5
Model Predicted Concentration Trends - Five Year Reviews
Groundwater Remedy Operation and Maintenance Manual
Volume 2: Sampling and Monitoring Plan
PG&E Topock Compressor Station, Needles, California

Monitoring Wells (Inside Plume)	Model Predicted Cr(VI) Concentration Trend
Sixth 5-Year Review	
NTH IRZ Dose Response Wells	
MW-C	Less than 32 ppb
MW-D	Less than 32 ppb
MW-E	Less than 32 ppb
MW-F	Less than 32 ppb
MW-G	Less than 32 ppb
MW-20-070	Less than 32 ppb
MW-20-100	Less than 32 ppb
MW-20-130	Less than 32 ppb
MW-26	Less than 32 ppb
MW-51	Less than 32 ppb
TW-2D	Less than 32 ppb
TW-2S	Less than 32 ppb
TW-3D	Less than 32 ppb
NTH IRZ Downgradient Monitoring Wells	
MW-H	Less than 32 ppb
MW-36-100	Less than 32 ppb
MW-39-100	Less than 32 ppb
MW-44-115	Less than 32 ppb
MW-44-125	Less than 32 ppb
MW-46-175	Less than 32 ppb
PT-5D	Less than 32 ppb
Riverbank Monitoring Wells	
MW-34-100	Less than 32 ppb
MW-45-095	Less than 32 ppb
IRL Downgradient Monitoring Wells	
MW-M	Less than 32 ppb
MW-R	Less than 32 ppb
MW-37D	Less than 32 ppb
TCS Dose Response and Downgradient MWs	
MW-66-165	Less than 32 ppb
MW-66-230	Less than 32 ppb
MW-67-185	Less than 32 ppb
MW-67-225	Less than 32 ppb
MW-67-260	Less than 32 ppb
TW-1	Less than 32 ppb
TWB Extraction Monitoring Wells	
MW-K	Less than 32 ppb
MW-12	Less than 32 ppb
MW-59-100	Less than 32 ppb
MW-68-180	Less than 32 ppb
MW-68-240	Less than 32 ppb
East Ravine Extraction Monitoring Wells	
MW-57-050	Less than 32 ppb
MW-57-070	Less than 32 ppb
MW-61-110	Less than 32 ppb
MW-62-065	Decreasing
MW-62-110	Decreasing
MW-70-105	Less than 32 ppb
MW-70BR-D	Less than 32 ppb
MW-72-80	Less than 32 ppb
MW-73-80	Less than 32 ppb

Table 2.1-5
Model Predicted Concentration Trends - Five Year Reviews
Groundwater Remedy Operation and Maintenance Manual
Volume 2: Sampling and Monitoring Plan
PG&E Topock Compressor Station, Needles, California

Monitoring Wells (Inside Plume)	Model Predicted Cr(VI) Concentration Trend
Other Monitoring Wells	
MW-L	Less than 32 ppb
MW-N	Decreasing
MW-10	Less than 32 ppb
MW-11	Less than 32 ppb
MW-19	Less than 32 ppb
MW-24B	Less than 32 ppb
MW-25	Decreasing
MW-31-060	Less than 32 ppb
MW-38D	Less than 32 ppb
MW-38S	Less than 32 ppb
MW-40D	Less than 32 ppb
MW-50-200	Less than 32 ppb
MW-60-125	Less than 32 ppb
MW-65-160	Less than 32 ppb
MW-65-225	Less than 32 ppb
MW-69-195	Less than 32 ppb
PT-8D	Decreasing
PT-9D	Decreasing
PT-9M	Decreasing
PT-9S	Less than 32 ppb
MW-HH	Less than 32 ppb
MW-II	Less than 32 ppb
MW-9	Less than 32 ppb
MW-24A	Less than 32 ppb
MW-10D	Less than 32 ppb
MW-11D	Less than 32 ppb
Seventh 5-Year Review	
NTH IRZ Dose Response Wells	
MW-C	Less than 32 ppb
MW-D	Less than 32 ppb
MW-E	Less than 32 ppb
MW-F	Less than 32 ppb
MW-G	Less than 32 ppb
MW-20-070	Less than 32 ppb
MW-20-100	Less than 32 ppb
MW-20-130	Less than 32 ppb
MW-26	Less than 32 ppb
MW-51	Less than 32 ppb
TW-2D	Less than 32 ppb
TW-2S	Less than 32 ppb
TW-3D	Less than 32 ppb
NTH IRZ Downgradient Monitoring Wells	
MW-H	Less than 32 ppb
MW-36-100	Less than 32 ppb
MW-39-100	Less than 32 ppb
MW-44-115	Less than 32 ppb
MW-44-125	Less than 32 ppb
MW-46-175	Less than 32 ppb
PT-5D	Less than 32 ppb
Riverbank Monitoring Wells	
MW-34-100	Less than 32 ppb
MW-45-095	Less than 32 ppb

Table 2.1-5
Model Predicted Concentration Trends - Five Year Reviews
Groundwater Remedy Operation and Maintenance Manual
Volume 2: Sampling and Monitoring Plan
PG&E Topock Compressor Station, Needles, California

Monitoring Wells (Inside Plume)	Model Predicted Cr(VI) Concentration Trend
IRL Downgradient Monitoring Wells	
MW-M	Less than 32 ppb
MW-R	Less than 32 ppb
MW-37D	Less than 32 ppb
TCS Dose Response and Downgradient MWs	
MW-66-165	Less than 32 ppb
MW-66-230	Less than 32 ppb
MW-67-185	Less than 32 ppb
MW-67-225	Less than 32 ppb
MW-67-260	Less than 32 ppb
TW-1	Less than 32 ppb
TWB Extraction Monitoring Wells	
MW-K	Less than 32 ppb
MW-12	Less than 32 ppb
MW-59-100	Less than 32 ppb
MW-68-180	Less than 32 ppb
MW-68-240	Less than 32 ppb
East Ravine Extraction Monitoring Wells	
MW-57-050	Less than 32 ppb
MW-57-070	Less than 32 ppb
MW-61-110	Less than 32 ppb
MW-62-065	Less than 32 ppb
MW-62-110	Decreasing
MW-70-105	Less than 32 ppb
MW-70BR-D	Less than 32 ppb
MW-72-80	Less than 32 ppb
MW-73-80	Less than 32 ppb
Other Monitoring Wells	
MW-L	Less than 32 ppb
MW-N	Decreasing
MW-10	Less than 32 ppb
MW-11	Less than 32 ppb
MW-19	Less than 32 ppb
MW-24B	Less than 32 ppb
MW-25	Less than 32 ppb
MW-31-060	Less than 32 ppb
MW-38D	Less than 32 ppb
MW-38S	Less than 32 ppb
MW-40D	Less than 32 ppb
MW-50-200	Less than 32 ppb
MW-60-125	Less than 32 ppb
MW-65-160	Less than 32 ppb
MW-65-225	Less than 32 ppb
MW-69-195	Less than 32 ppb
PT-8D	Less than 32 ppb
PT-9D	Less than 32 ppb
PT-9M	Less than 32 ppb
PT-9S	Less than 32 ppb
MW-HH	Less than 32 ppb
MW-II	Less than 32 ppb
MW-9	Less than 32 ppb
MW-24A	Less than 32 ppb
MW-10D	Less than 32 ppb
MW-11D	Less than 32 ppb

Notes appear on the following page.

Table 2.1-5
Model Predicted Concentration Trends - Five Year Reviews
Groundwater Remedy Operation and Maintenance Manual
Volume 2: Sampling and Monitoring Plan
PG&E Topock Compressor Station, Needles, California

Monitoring Wells (Inside Plume)	Model Predicted Cr(VI) Concentration Trend

Abbreviations:

Cr(VI)	hexavalent chromium
FW	Freshwater
IRL	Inner Recirculation Loop
IRZ	In situ Reactive Zone
NTH	National Trails Highway
ppb	parts per billion
TCS	Topock Compressor Station
TWB	Transwestern Bench

Table 2.1-6
Monitoring Program Wells and Surface Water Sampling Points for COPC Monitoring
Groundwater Remedy Operation and Maintenance Manual
Volume 2: Sampling and Monitoring Plan
PG&E Topock Compressor Station, Needles, California

Location ID	Nitrate	Molybdenum	Selenium
Existing Monitoring Wells			
CW-02D	As needed	A	
CW-02M	As needed	A	
CW-03D	As needed	A	
CW-03M	As needed	A	
MW-10	A	A	
MW-12	A	A	A
MW-13	SA		
MW-14	Q[3]	A	A
MW-20-070	M(yr), Q		
MW-20-100	M(yr), Q		
MW-20-130	M(yr), Q	A	A
MW-21	As needed[2]		A
MW-22	A	A	A
MW-23-060	A	A	A
MW-23-080	A	A	A
MW-24A	A	A	A
MW-24B	A	A	A
MW-26	M(yr), Q	A	A
MW-27-020	Q		
MW-27-060	As needed		
MW-27-085	As needed	A	A
MW-28-025	Q		
MW-28-090	Q	A	A
MW-29	Q		
MW-30-030	Q		
MW-30-050	Q		
MW-32-020	As needed[2]		
MW-25	A	A	A
MW-32-035	A	A	A
MW-33-040	A	A	A
MW-33-090	A	A	A
MW-33-150	A	A	A
MW-33-210	Q		
MW-34-055	A	A	A

Table 2.1-6
Monitoring Program Wells and Surface Water Sampling Points for COPC Monitoring
Groundwater Remedy Operation and Maintenance Manual
Volume 2: Sampling and Monitoring Plan
PG&E Topock Compressor Station, Needles, California

Location ID	Nitrate	Molybdenum	Selenium
MW-34-080	A	A	A
MW-34-100	A	A	A
MW-35-060	A	A	A
MW-35-135	A	A	A
MW-36-020	As needed[2]		
MW-36-040	As needed[2]	A	A
MW-36-050	As needed[2]		
MW-36-070	As needed[2]		
MW-36-090	Q		
MW-36-100	Q	A	A
MW-37D	Q	A	A
MW-37S	Q	A	A
MW-38D		A	
MW-38S	A	A	
MW-39-040	As needed[2]		
MW-39-050	Q		
MW-39-060	Q		
MW-39-070	Q		
MW-39-080	Q		
MW-39-100	Q		
MW-40S	A	A	A
MW-40D	A	A	A
MW-41D	As needed	A	A
MW-41M	Q	A	A
MW-41S	Q	A	A
MW-42-030	A	A	A
MW-42-055	As needed[2]	A	A
MW-42-065	As needed[2]		
MW-43-025	A	A	A
MW-43-075	As needed[2]	A	A
MW-43-090	As needed[2]		
MW-44-070	A	A	A
MW-44-115	A	A	A
MW-44-125	A	A	A

Table 2.1-6
Monitoring Program Wells and Surface Water Sampling Points for COPC Monitoring
Groundwater Remedy Operation and Maintenance Manual
Volume 2: Sampling and Monitoring Plan
PG&E Topock Compressor Station, Needles, California

Location ID	Nitrate	Molybdenum	Selenium
MW-45-095	Q		
MW-46-175	A	A	A
MW-46-205	A	A	A
MW-47-055	M(yr), Q		
MW-47-115	M(yr), Q		
MW-49-135	Q		
MW-49-275	Q		
MW-49-365	As needed		
MW-50-200	A	A	A
MW-51	M(yr), Q	A	A
MW-52D	As needed[2]		
MW-52M	As needed[2]		
MW-52S	As needed[2]		
MW-53D	As needed[2]		
MW-53M	As needed[2]		
MW-53S	As needed[2]		
MW-54-085	As needed	A	
MW-54-140	As needed	A	
MW-54-195	As needed	A	
MW-55-045	As needed		
MW-55-120	As needed		
MW-56D	As needed		
MW-56M	As needed		
MW-56S	As needed		
MW-57-070		A	
MW-57-185		A	
MW-58-BR		A	
MW-59-100		A	
MW-60-125		A	
MW-61-110		A	
MW-62-065		A	
MW-62-110		A	
MW-62-190		A	
MW-63-065		A	

Table 2.1-6
Monitoring Program Wells and Surface Water Sampling Points for COPC Monitoring
Groundwater Remedy Operation and Maintenance Manual
Volume 2: Sampling and Monitoring Plan
PG&E Topock Compressor Station, Needles, California

Location ID	Nitrate	Molybdenum	Selenium
MW-64-BR		A	
MW-65-160		A	
MW-65-225		A	
MW-66-165	Q	A	A
MW-66-230	Q	A	
MW-67-185	SA	A	A
MW-67-225	SA	A	A
MW-67-260	SA	A	
MW-68-180	A	A	
MW-68-240		A	
MW-69-195	A	A	
MW-70-105		A	
MW-71-35	M(yr), Q	A	
MW-72-80		A	
MW-73-80		A	
MW-74-240		A	
OW-02S		A	
PT-5D	Q		
PT-5M	Q		
PT-5S	As needed		
PT-9D	A	A	A
PT-9M	A	A	A
PT-9S	A	A	A
TW-1	SA	A	A
Proposed Monitoring Wells			
MW- C	As needed[2]		
MW- D	As needed[2]		
MW- E	As needed[2]		
MW- F	As needed[2]		
MW- G	A	A	A
MW- H	Q		
MW- I	As needed	A	A
MW- J	As needed	A	A
MW- M	As needed		

Table 2.1-6
Monitoring Program Wells and Surface Water Sampling Points for COPC Monitoring
Groundwater Remedy Operation and Maintenance Manual
Volume 2: Sampling and Monitoring Plan
PG&E Topock Compressor Station, Needles, California

Location ID	Nitrate	Molybdenum	Selenium
MW- O	As needed		
MW- P	Q[3]		
MW- Q	Q[3]		
MW- R	As needed		
MW- U	A	A	A
MW- V	A	A	A
MW- W	Q	A	A
Surface Water Sampling Locations			
C-NR4 (River channel)	A	A	A
C-NR3 (River channel)	A	A	A
C-NR1 (River channel)	A	A	A
C-CON (River channel)	A	A	A
C-MAR (River channel)	A	A	A
C-R27 (River channel)	A	A	A
C-BNS (River channel)	A	A	A
C-R-22A (River channel)	A	A	A
C-I-3 (River channel)	A	A	A
C-TAZ (River channel)	A	A	A
RRB (Shoreline)	A	A	A
R-19 (Shoreline)	A	A	A
R-28 (Shoreline)	A	A	A
R-63 (Shoreline)	A	A	A
SW-1 (East Ravine)	A	A	A
SW-2 (East Ravine)	A	A	A

Notes

CW-02D	Blue highlight indicates wells included in the COPC Perimeter Assessment Plan (PAP)
A	Gray highlight indicates avg. concentration above threshold (10 mg/L for Nitrate, 70 ug/L for Molybdenum, 50 ug/L for Selenium).
SA	Gray font indicates wells monitored for nitrate under compliance or process control programs, at frequency indicated.

Note – although more frequent monitoring may occur at some wells, the minimum monitoring frequency for all PAP wells is annually.
Sampling program will be re-evaluated after two years of operation.

Table 2.1-6
Monitoring Program Wells and Surface Water Sampling Points for COPC Monitoring
Groundwater Remedy Operation and Maintenance Manual
Volume 2: Sampling and Monitoring Plan
PG&E Topock Compressor Station, Needles, California

Location ID	Nitrate	Molybdenum	Selenium

[1] Dose Response Wells are defined as within the carbon footprint as predicted by the fate and transport model.

[2] Baseline data indicates no detectable nitrate.

[3] If associated injection well is amended with carbon

Frequencies:

M: Monthly

Q: Quarterly

SA: Semi-Annually

A: Annually

Table 2.2-1
Process Control Monitoring Program Anticipated Concentration Ranges and Timeframes
Groundwater Remedy Operation and Maintenance Manual
Volume 2: Sampling and Monitoring Plan
PG&E Topock Compressor Station, Needles, California

	Currently-Anticipated Concentration Range/Trend (Maximum)[1,2]				Currently-Anticipated Timeframe for Cr(VI) Concentration Decreases[1]	Currently-Anticipated Byproduct Arrival Timeframe[1]
	Total Organic Carbon (ppm)	Dissolved Manganese (ppm)	Dissolved Iron (ppm)[6]	Dissolved Arsenic (ppb)		
National Trails Highway In-Situ Reactive Zone						
Dose Response Monitoring Wells	15 - 50 [3]	1 - 2.5 (5)	1 - 2.5 (5)	2 - 10 (15)	< 6 months	< 6 months
Downgradient Monitoring Wells	0.5 - 15	1 - 2.5 (5)	1 - 2.5 (5)	2 - 10 (15)	2-10 years	2-10 years[4]
Riverbank Extraction Monitoring Wells	0.5 - 10	0.1 - 2 (3)	0.1 - 2 (3)	2 - 5 (8)	---	10 - 30 years[5]
Northern Extraction Monitoring Wells	N/A	N/A	N/A	2 - 4 (5)	---	No anticipated change
Inner Recirculation Loop						
Dose Response MonitoringWells	0 - 50	1 - 2.5 (5)	1 - 2.5 (5)	1 - 16 (20)	---	< 6 months
Downgradient Monitoring Wells	0.5 - 2.0	0.1 - 1 (3)	0.1 - 1 (3)	2 - 4 (5)	< 10 years	2-10 years
Byproduct Monitoring Wells	N/A	< 0.5 (1.3)	< 0.5 (1.3)	2 - 4 (5)	---	No anticipated change
Topock Compressor Station Recirculation Loop						
Dose Response Monitoring Wells	50 - 1,000	1 - 2.5 (5)	1 - 2.5 (5)	1 - 10 (15)	< 6 months	< 6 months
Downgradient Monitoring Wells	1 - 25	0.1 - 2 (3)	0.1 - 2 (3)	2 - 4 (5)	2 - 10 years	2-10 years
Byproduct Monitoring Wells	N/A	N/A	N/A	2 - 4 (5) [7]	0.5 - 20 years	No anticipated change[7]
Transwestern Bench Extraction Monitoring Wells	N/A	N/A	N/A	N/A	2 - 30 years	---
East Ravine Extraction Monitoring Wells	N/A	N/A	N/A	N/A	< 30 years	---
Freshwater Injection						
Arsenic Monitoring Wells	N/A	N/A	N/A	150 ft: 10-12 ppb 225 ft: <10 ppb	---	Injected water: months Arsenic: no arrival predicted

Notes:

[1] Concentration ranges and arrival/attenuation timeframes are based on nominal baseline values and current solute transport model predictions. These estimates may be updated as the system is installed and baseline sampling is conducted, and continually adjusted during the remedy as the solute transport model is refined. The basis for these ranges and maximum thresholds are described in the text.

[2] Concentration ranges and maximum thresholds do not apply to individual wells that already exhibit natural baseline levels above the given ranges/thresholds.

[3] Total organic carbon concentration range applies to dose response wells midway between injection points. Higher concentrations are anticipated in the immediate vicinity of injection wells depending on injection concentrations.

[4] Greater than 10 year byproduct arrival time expected for more distant wells, such as MW-43, MW-52, and MW-53.

[5] Range does not apply to Arizona wells MW-54, MW-55, and MW-56, which are not anticipated to receive byproducts.

[6] Solute transport modeling for iron was not conducted. It is therefore assumed that iron will follow concentration trends similar to manganese, which is a conservative assumption given that iron typically attenuates more quickly than manganese downgradient of an in-situ reactive zone.

[7] Note that the anticipated concentration range and maximum for dissolved arsenic, as listed in this table, are exclusive of monitoring wells located in the vicinity of FW-2 (MW-09 and MW-II). Simulated arsenic concentrations at these locations (MW-09 and MW-II) are impacted by naturally occurring arsenic levels in injected freshwater.

Abbreviations:

< less than
Cr(VI) hexavalent chromium
ppb parts per billion
ppm parts per million
N/A not applicable

SURFACE WATER MONITORING LOCATIONS
(C-CON, C-NR1, C-NR3 AND C-NR4)

RRB
MW-Z
IRZ-1
MW-35-060/135
MW-A
RB-1
IRZ-5
MW-49-135/275/365
MW-X
MW-B
IRZ-9
MW-29
MW-47-055/115
TW-04
RB-2
IRZ-11
MW-O
IRZ-13
MW-C
R-19
MW-33-040/050/150/210
MW-Y
IRZ-15
RB-3
MW-50-200
MW-50-095
TW-05
IRZ-16
MW-H
R-28
MW-19
IRZ-17
MW-28-025/090
MW-54-085/140/195
MW-D
RB-4
MW-31-060
MW-31-135
MW-46-175
MW-46-205
IRZ-19
IRZ-20
MW-44-115/125
IRZ-21
MW-44-070
MW-36-100
MW-36-020/040/050/070/090
TW-02S/D
PT-5D
MW-45-095
TW-03D
MW-39-100
PT-5S/M
MW-34-100
MW-39-040/050/060/070/080
IRZ-23
MW-34-055/080
MW-20-070/100/130
MW-30-030/050
C-MAR
MW-55-045/120
IRZ-25
RB-5
C-R27
MW-E
MW-42-030/055/065
MW-27-020/060/085
IRZ-27
IRZ-29
MW-32-020/035
C-BNS
MW-F
IRZ-31
MW-26
MW-51
MW-W
MW-43-025/075/090
IRZ-33
MW-53S/M/D
MW-52-S/M/D
C-R-22A
IRZ-35
IRZ-37
MW-G
MW-22
MW-56S/M/D
MW-21
MW-48
MW-12
IRZ-39
MW-71-35
SW-1
MW-23-060
MW-23-080
MW-62-065/110
MW-62-190
ER-1
SW-2
ER-2
MW-63-065
C-I-3
ER-3
EAST RAVINE
EXTRACTION
MW-T
ER-4
R-63
C-TAZ
MW-59-100
MW-57-050/070
MW-57-185
MW-61-110
MW-72-080
MW-72BR-200
MW-73-080
MW-58BR
MW-58-065/115/205
MW-64-150/205/260
MW-64BR
MW-60BR-245
MW-60-125
ER-6
MW-70-105
MW-70BR-D
MW-74-240
MW-68-180/240
MW-68BR-280
MW-67-185/225/260
MW-66-165/230
MW-66BR-270
TWB-1
TWB-2
TCS-2
MW-10
MW-10D
MW-V
TW-01
TCS-1
TCS LOOP
INJECTION
TRANSWESTERN
BENCH EXTRACTION
MW-K
MW-38S/D
PGE-07(BR)
MW-24A
MW-24B
MW-24BR
PT-8D
MW-11
MW-11D
PT-9S/M/D
MW-40D
MW-40S
MW-U
INTERSTATE 40
MW-I
MW-AA
MW-41S/M/D
MW-P
IRL-1
CW-03M/D
CW-04M/D
MW-CC
IRL
INJECTION
OW-02S/M/D
MW-BB
IRL-2
CW-02M/D
MW-13
BAT CAVE WASH
OW-01S/M/D
OW-05S/M/D
FW-1
FRESHWATER
INJECTION
IRL-3
MW-DD
MW-14
CW-01M/D
MW-J
MW-EE
MW-FF
MW-GG
MW-Q
IRL-4
MW-R
MW-M
MW-25
MW-N
MW-L
MW-37D
MW-37S
BNSF RAILROAD
BNSF RAILROAD
NATIONAL TRAILS HIGHWAY
IRL RIVERBANK EXTRACTION
COLORADO RIVER
COLORADO RIVER
MW-15
MW-II
MW-09
PGE-08
MW-HH
MW-S
FW-2
MW-65-160/225
MW-69-195
FRESHWATER
INJECTION
TOPOCK
COMPRESSOR
STATION
APPROXIMATE BEDROCK CONTACT
AT 425 FEET ABOVE MEAN SEA LEVEL
FORMER
EVAPORATION PONDS

LEGEND

- COMPLIANCE MONITORING WELL (INSIDE PLUME)
- COMPLIANCE MONITORING WELL (OUTSIDE PLUME)
- FUTURE PROVISIONAL COMPLIANCE MONITORING WELL (OUTSIDE PLUME)
- SURFACE WATER SAMPLE LOCATION
- INJECTION WELL
- EXTRACTION WELL
- APPROXIMATE OUTLINE OF HEXAVALENT CHROMIUM CONCENTRATIONS GREATER THAN 32 MICROGRAMS PER LITER (BASED ON FOURTH QUARTER 2013 DATA, MODEL LAYER 2)
- APPROXIMATE OUTLINE OF HEXAVALENT CHROMIUM CONCENTRATIONS GREATER THAN 32 MICROGRAMS PER LITER (BASED ON FOURTH QUARTER 2013 DATA, MODEL LAYER 4)
- PAVED ACCESS ROAD
- ACCESS ROAD
- GRAVEL ACCESS
- HIGHWAY
- RAILROAD
- RIVER
- AREA FOR POTENTIAL SLANT WELL SCREENS
- AREA FOR PLANNED COMPLIANCE MONITORING WELL (INSIDE PLUME)
- WATER BOUNDARY

N

0 500 1,000 1,500

1 " = 500 '

ABBREVIATIONS

TCS TOPOCK COMPRESSOR STATION
IRL INNER RECIRCULATION LOOP

PACIFIC GAS AND ELECTRIC COMPANY
NEEDLES, CALIFORNIA
OPERATION AND MAINTENANCE MANUAL
VOLUME 2: SAMPLING AND ANALYSIS PLAN

COMPLIANCE MONITORING NETWORK

ARCADIS Design & Consultancy for natural and built assets

FIGURE
2.1-1

File Path: G:\Graphics\ARITOPOCK.01\GIS\MXD\BOD\F2-1-1 Compliance Monitoring Network.mxd - 10/21/2015

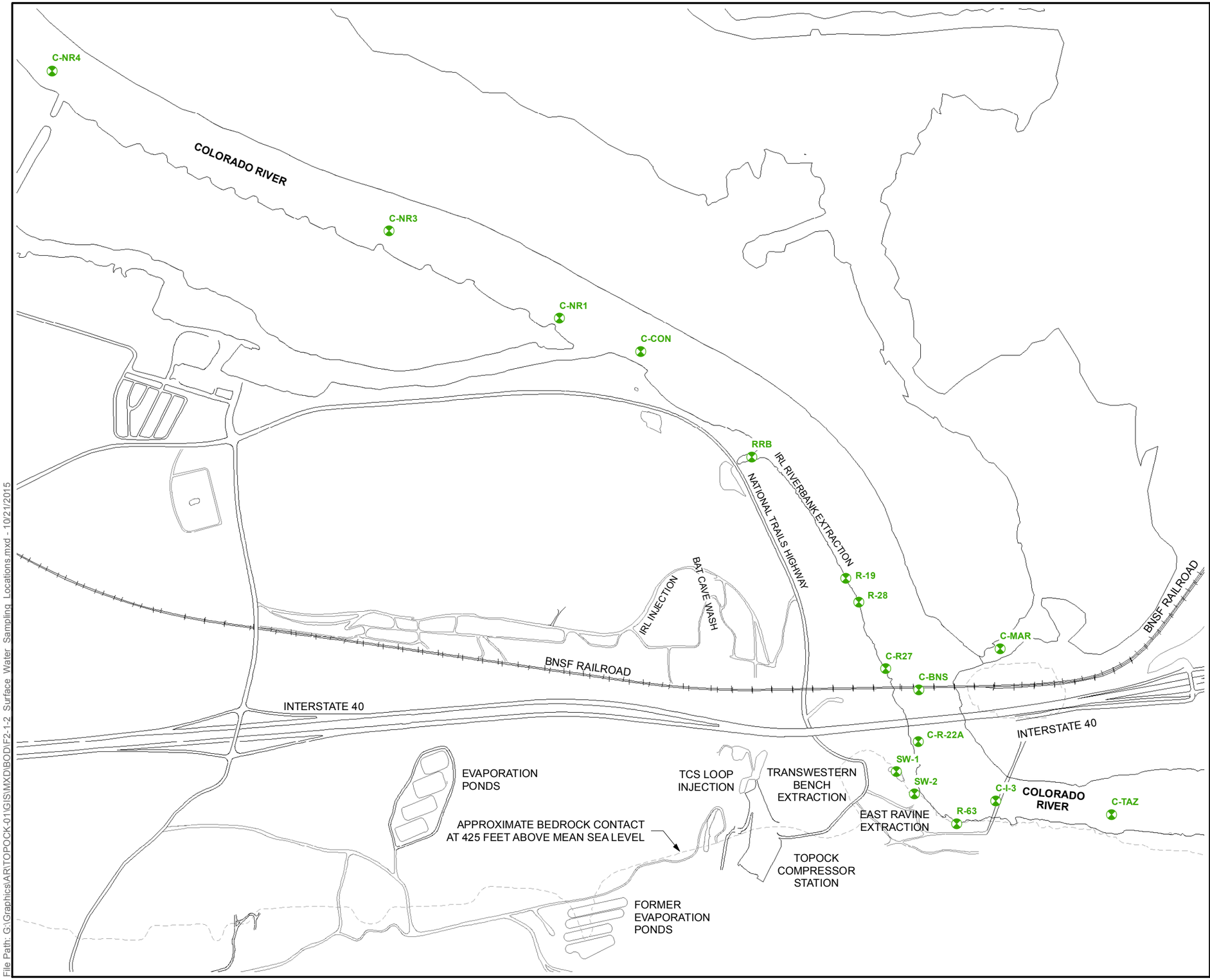

LEGEND

SURFACE WATER SAMPLE LOCATION

ABBREVIATIONS

TCS	TOPOCK COMPRESSOR STATION
IRZ	IN-SITU REACTIVE ZONE
IRL	INNER RECIRCULATION LOOP

N

0 1,000 2,000 3,000

1 " = 1,000 '

PACIFIC GAS AND ELECTRIC COMPANY
NEEDLES, CALIFORNIA
OPERATION AND MAINTENANCE MANUAL
VOLUME 2: SAMPLING AND ANALYSIS PLAN

SURFACE WATER SAMPLING LOCATIONS

ARCADIS Design & Consultancy for natural and built assets

FIGURE
2.1-2

File Path: G:\Graphics\AR\TOPOCK-01\GIS\MXD\BOD\F2-1-2_Surface_Water_Sampling_Locations.mxd - 10/21/2015

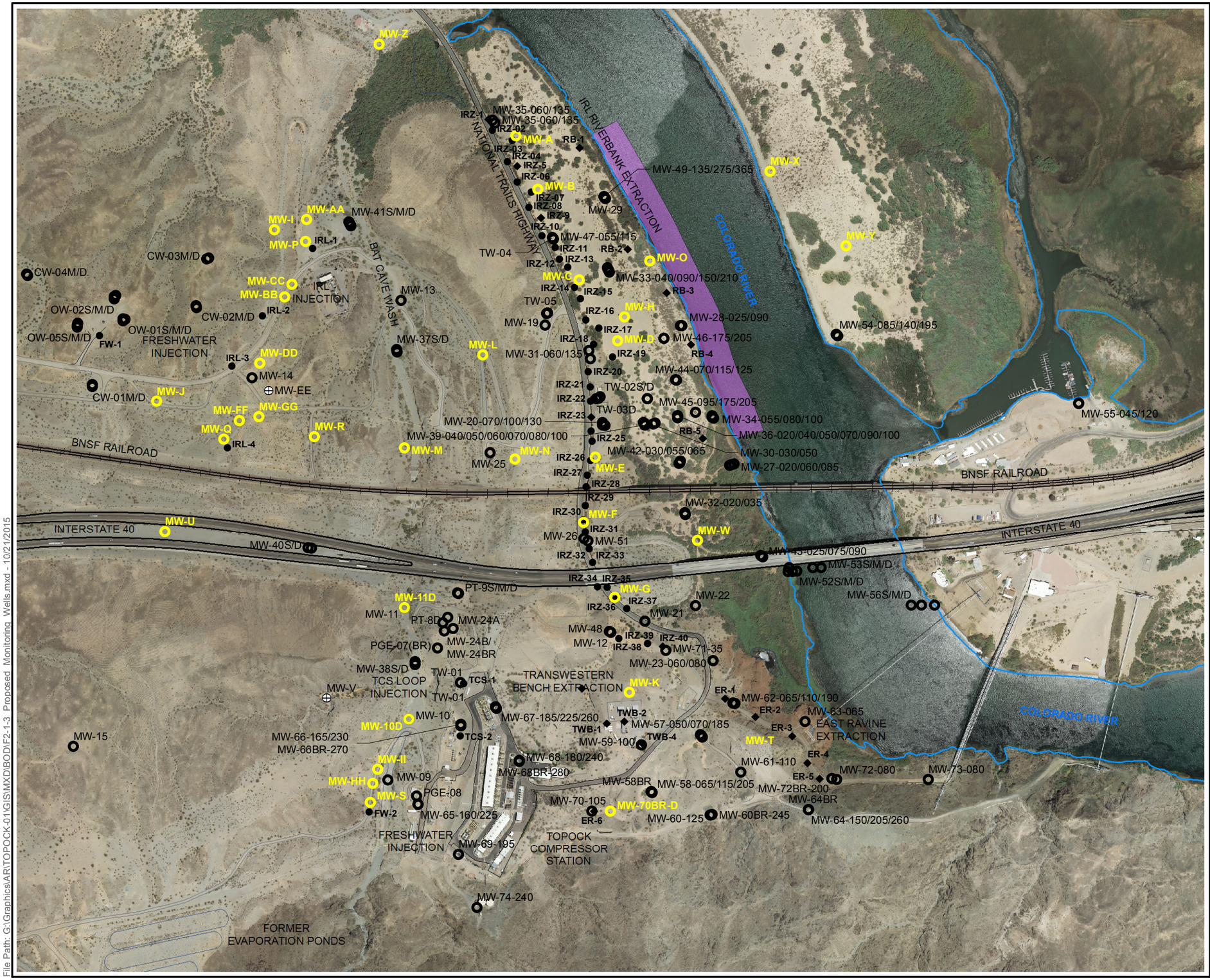

LEGEND

- ⊕ FUTURE PROVISIONAL MONITORING WELL
- PROPOSED MONITORING WELL LOCATION
- EXISTING MONITORING WELL LOCATION
- ● PROPOSED INJECTION WELL LOCATION
- ◆ PROPOSED EXTRACTION WELL LOCATION
- AREA FOR POTENTIAL SLANT WELL SCREENS

ABBREVIATIONS

TCS	TOPOCK COMPRESSOR STATION
IRL	INNER RECIRCULATION LOOP

PACIFIC GAS AND ELECTRIC COMPANY
NEEDLES, CALIFORNIA
OPERATION AND MAINTENANCE MANUAL
VOLUME 2: SAMPLING AND ANALYSIS PLAN

PROPOSED MONITORING WELLS

ARCADIS Design & Consultancy for natural and built assets

FIGURE
2.1-3

File Path: G:\Graphics\AR\TOPOCK-01\GIS\MXD\BOD\F2.1-3_Proposed_Monitoring_Wells.mxd - 10/21/2015

RRB
RIVERBANK EXTRACTION SURFACE WATER MONITORING LOCATIONS (C-CON, C-NR1, C-NR3 AND C-NR4)
IRZ-1
MW-35-060/135
MW-A
RB-1
IRZ-5
MW-49-135/275/365
MW-X
MW-B
MW-29
IRZ-9
MW-AA
MW-41S/M/D
MW-I
TW-04
MW-47-055/115
MW-P
IRL-1
IRZ-11
RB-2
MW-O
R-19
MW-Y
CW-03M/D
IRZ-13
MW-CC
MW-C
RB-3
MW-BB
IRL INJECTION
MW-13
MW-33-040/090/150/210
IRZ-15
MW-H
R-28
OW-02S/M/D
IRL-2
IRZ-16
MW-28-025/090
CW-02M/D
IRZ-17
MW-54-085/140/195
FW-1
OW-01S/M/D
FRESHWATER INJECTION
MW-37S/D
MW-D
RB-4
IRZ-19
MW-46-175/205
IRL-3
MW-DD
IRZ-20
MW-44-070/115/125
MW-14
MW-EE
IRZ-21
TW-02S/D
MW-30-030/050
MW-J
TW-03D
MW-36-020/040/050/070/090/100
MW-FF
MW-GG
MW-39-040/050/060/070/080/100
PT-5S/M/D
MW-34-055/080/100
IRZ-23
C-MAR
MW-55-045/120
MW-Q
MW-R
MW-20-070/100/130
IRZ-25
RB-5
IRL-4
MW-M
MW-45-095
BNSF RAILROAD
MW-42-030/055/065
MW-E
C-R27
IRZ-27
MW-27-020/060/085
BNSF RAILROAD
IRZ-29
MW-32-020/035
C-BNS
MW-F
IRZ-31
MW-W
INTERSTATE 40
MW-26
MW-51
MW-43-025/075/090
INTERSTATE 40
IRZ-33
MW-53S/M/D
IRZ-35
MW-52-S/M/D
MW-52S/M/D
MW-11D
MW-11
MW-G
IRZ-37
MW-22
MW-56S/M/D
C-R-22A
MW-21
MW-48
IRZ-39
MW-12
MW-71-35
SW-1
MW-38S/D
MW-23-060/080
TW-01
TCS-1
TCS LOOP INJECTION
TRANSWESTERN BENCH EXTRACTION
MW-K
ER-1
SW-2
MW-V
MW-67-185/225/260
MW-62-065/110/190
MW-10D
TWB-2
ER-2
MW-63-065
C-I-3
COLORADO RIVER
MW-10
MW-66-165/230
TWB-1
MW-57-050/070/185
EAST RAVINE EXTRACTION
TCS-2
MW-T
ER-3
C-TAZ
MW-68-180/240
MW-59-100
ER-4
R-63
MW-II
MW-09
MW-61-110
MW-72-080
MW-73-080
MW-68BR-280
MW-72BR-200
MW-HH
MW-58BR
MW-58-065/115/205
APPROXIMATE BEDROCK CONTACT AT 425 FEET ABOVE MEAN SEA LEVEL
FW-2
MW-70-105
MW-70BR-D
MW-64-150/205/260
MW-64BR
ER-6
FRESHWATER INJECTION
TOPOCK COMPRESSOR STATION
FORMER EVAPORATION PONDS

ABBREVIATIONS

TCS	TOPOCK COMPRESSOR STATION
NTH	NATIONAL TRAILS HIGHWAY
IRZ	IN-SITU REACTIVE ZONE
TWB	TRANSWESTERN BENCH
ER	EAST RAVINE
IRL	INNER RECIRCULATION LOOP

LEGEND

- NTH IRZ DOSE RESPONSE WELL
- RIVERBANK OR NORTHERN IRZ EXTRACTION MONITORING WELL
- NTH IRZ DOWNGRADIENT AND RIVERBANK EXTRACTION MONITORING WELL
- INNER RECIRCULATION LOOP DOSE RESPONSE WELL
- INNER RECIRCULATION LOOP DOWNGRADIENT MONITORING WELL
- INNER RECIRCULATION LOOP BYPRODUCT MONITORING WELL
- INNER RECIRCULATION LOOP DOWNGRADIENT AND FRESHWATER ARSENIC MONITORING WELL
- INNER RECIRCULATION LOOP BYPRODUCT AND FRESHWATER ARSENIC MONITORING WELL
- TCS RECIRCULATION LOOP DOSE RESPONSE WELL
- TCS LOOP BYPRODUCT MONITORING WELL
- TCS LOOP TRANSWESTERN BENCH EXTRACTION MONITORING WELL
- TCS LOOP DOWNGRADIENT AND TWB EXTRACTION MONITORING WELL
- TCS LOOP BYPRODUCT AND FRESHWATER ARSENIC MONITORING WELL
- FUTURE PROVISIONAL TCS LOOP BYPRODUCT MONITORING WELL
- TCS LOOP EAST RAVINE EXTRACTION MONITORING WELL
- TCS LOOP EAST RAVINE AND RIVERBANK EXTRACTION MONITORING WELL
- FUTURE PROVISIONAL FRESHWATER ARSENIC MONITORING WELL
- FRESHWATER ARSENIC MONITORING WELL
- REMEDIATION WELL (INJECTION)
- REMEDIATION WELL (EXTRACTION)
- RIVERBANK EXTRACTION SURFACE WATER MONITORING LOCATION
- RIVERBANK AND EAST RAVINE EXTRACTION SURFACE WATER MONITORING LOCATION
- AREA FOR PLANNED TCS LOOP EAST RAVINE EXTRACTION MONITORING WELL MW-T
- AREA FOR POTENTIAL SLANT WELL SCREENS

PACIFIC GAS AND ELECTRIC COMPANY
NEEDLES, CALIFORNIA
OPERATION AND MAINTENANCE MANUAL
VOLUME 2: SAMPLING AND ANALYSIS PLAN

PROCESS CONTROL MONITORING NETWORK

ARCADIS Design & Consultancy for natural and built assets

FIGURE **2.2-1**

File Path: G:\Graphics\ARTOPOCK-01\GIS\MXD\BOD\F2-2-1_ProcessControlMonitoringNetwork.mxd - 10/21/2015

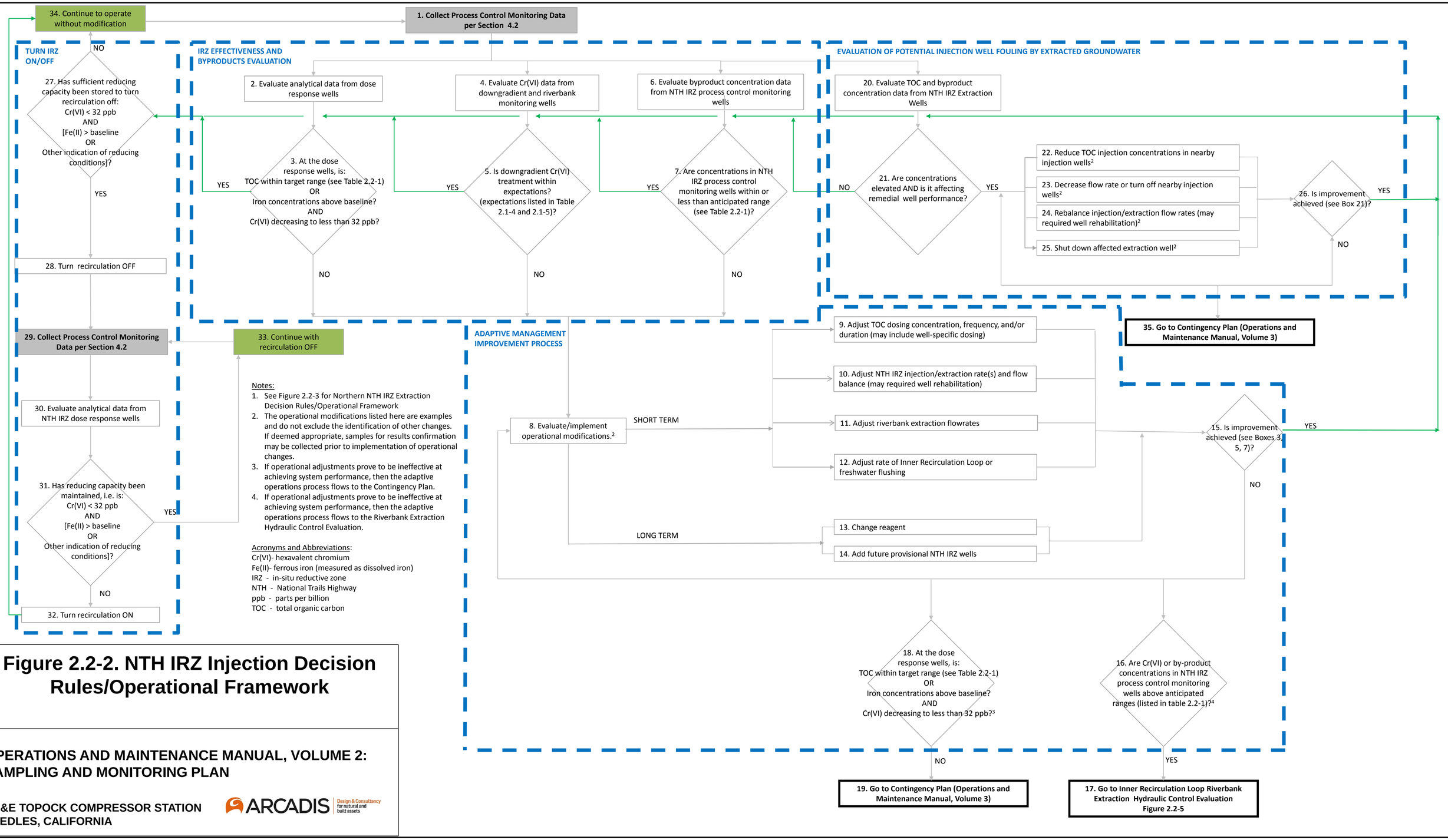

Notes:

1. See Figure 2.2-3 for Northern NTH IRZ Extraction Decision Rules/Operational Framework
2. The operational modifications listed here are examples and do not exclude the identification of other changes. If deemed appropriate, samples for results confirmation may be collected prior to implementation of operational changes.
3. If operational adjustments prove to be ineffective at achieving system performance, then the adaptive operations process flows to the Contingency Plan.
4. If operational adjustments prove to be ineffective at achieving system performance, then the adaptive operations process flows to the Riverbank Extraction Hydraulic Control Evaluation.

Acronyms and Abbreviations:
Cr(VI)- hexavalent chromium
Fe(II)- ferrous iron (measured as dissolved iron)
IRZ - in-situ reductive zone
NTH - National Trails Highway
ppb - parts per billion
TOC - total organic carbon

Figure 2.2-2. NTH IRZ Injection Decision Rules/Operational Framework

OPERATIONS AND MAINTENANCE MANUAL, VOLUME 2: SAMPLING AND MONITORING PLAN

PG&E TOPOCK COMPRESSOR STATION NEEDLES, CALIFORNIA

ARCADIS Design & Consultancy for natural and built assets

13. Continue to operate without modification, if NTH IRZ injection wells continue to operate (See Figure 2.2-2, box 27)

1. Collect analytical and water level data from northern NTH IRZ and riverbank extraction monitoring wells, extraction wells, and surface water sampling locations

Acronyms and Abbreviations:
Cr(VI)- hexavalent chromium
IRL- inner recirculation loop
IRZ - in-situ reactive zone
NTH - National Trails Highway

HYDRAULIC CONTROL EVALUATTION

2. Adjust flow model per model update schedule[3]. Use all available lines of evidence to evaluate hydraulic control per Section 4.3

3. Are Cr(VI) and/or byproducts controlled by the northern NTH IRZ and River Bank Extraction Wells (see also Figure 2.2-5)?

YES

NO

ADAPTIVE MANAGEMENT IMPROVEMENT PROCESS

4. Evaluate/implement operational modifications.[1]

SHORT TERM

LONG TERM

5. Adjust NTH IRZ or riverbank extraction rates (see also Figure 2.2-5)

6. Add future provisional extraction wells

7. Can NTH IRZ Injection Wells (for NTH IRZ extraction) or IRL injection wells (for Riverbank extraction) accommodate increased flow?

NO

SHORT TERM

8. Rehabilitate injection wells[1]

9. Adjust the flow balance across the system[1]

LONG TERM

10. Bring future provisional injection wells online[1]

11. Is injection capacity now adequate?

NO

YES

YES

12. Is extraction performance improvement achieved (see Box 3)?

YES

NO

14. Go to Contingency Plan (Operations and Maintenance Manual, Volume 3)[2]

Notes:
1.The operational modifications listed here are examples and do not exclude the identification of other changes. If deemed appropriate, samples for results confirmation may be collected prior to implementation of operational changes.
2. If operational adjustments prove to be ineffective at achieving system performance, then the adaptive operations process will flow to the Contingency Plan
3. Model updates are planned to be conducted approximately annually during start-up and during five-year reviews thereafter.

Figure 2.2-3. Northern NTH IRZ Extraction Rules/Operational Framework

OPERATIONS AND MAINTENANCE MANUAL, VOLUME 2: SAMPLING AND MONITORING PLAN

PG&E TOPOCK COMPRESSOR STATION NEEDLES, CALIFORNIA

ARCADIS Design & Consultancy for natural and built assets

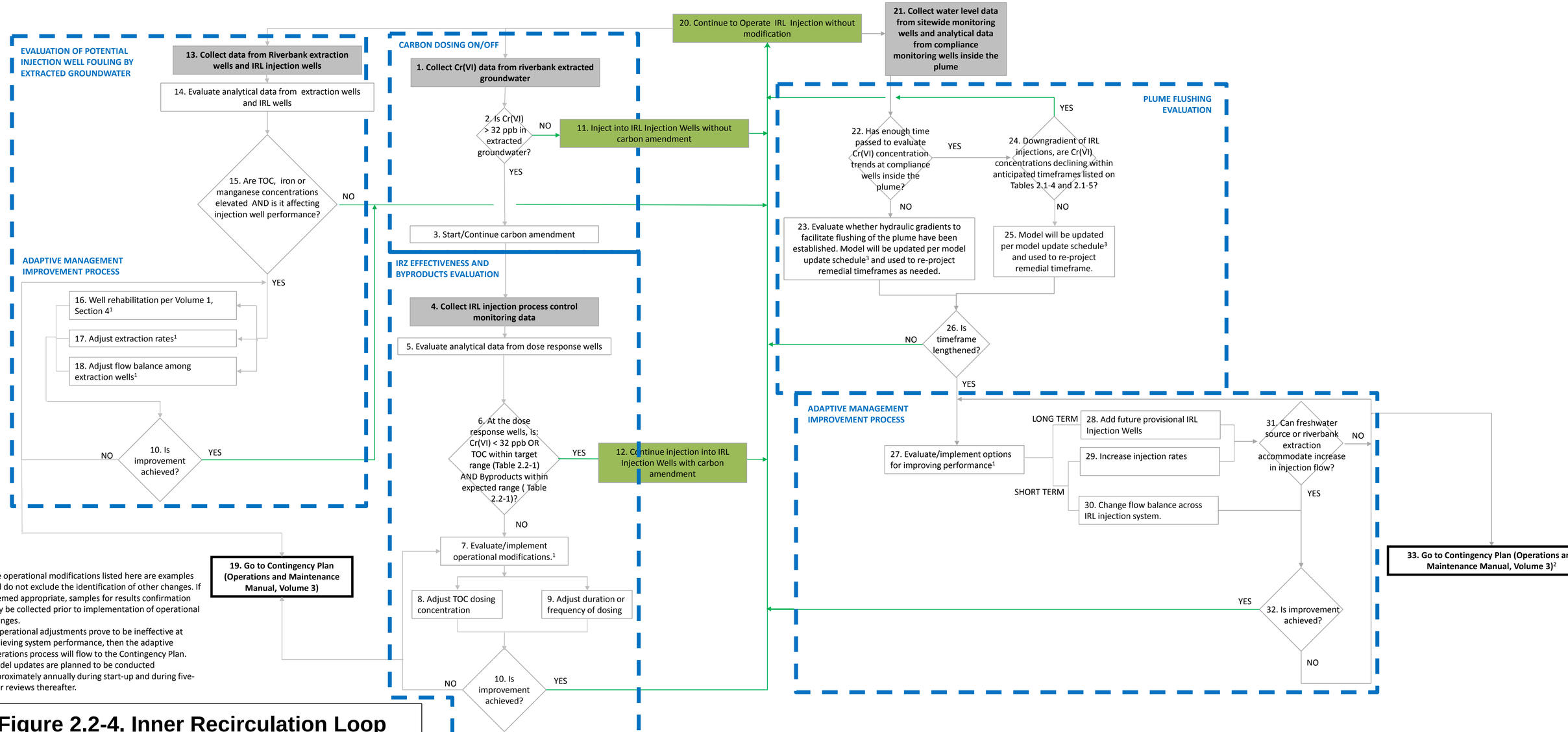

Notes:
1. The operational modifications listed here are examples and do not exclude the identification of other changes. If deemed appropriate, samples for results confirmation may be collected prior to implementation of operational changes.
2. If operational adjustments prove to be ineffective at achieving system performance, then the adaptive operations process will flow to the Contingency Plan.
3. Model updates are planned to be conducted approximately annually during start-up and during five-year reviews thereafter.

Acronyms and Abbreviations:
Cr(VI)- hexavalent chromium
IRL - Inner Recirculation Loop
ppb - parts per billion
TOC - total organic carbon

Figure 2.2-4. Inner Recirculation Loop Injection Decision Rules/Operational Framework

OPERATIONS AND MAINTENANCE MANUAL, VOLUME 2: SAMPLING AND MONITORING PLAN

PG&E TOPOCK COMPRESSOR STATION NEEDLES, CALIFORNIA

ARCADIS Design & Consultancy for natural and built assets

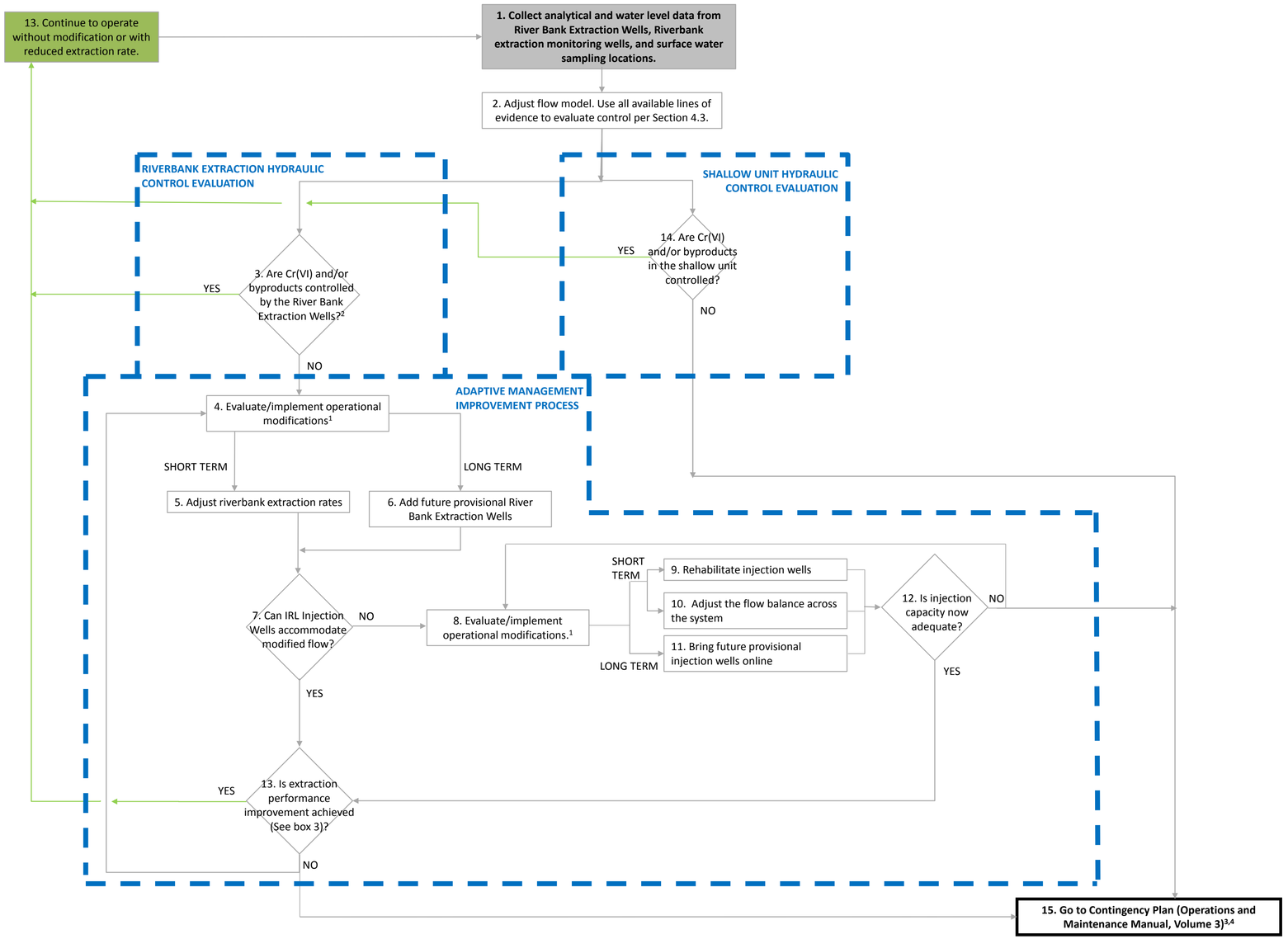

Notes:

1. The operational modifications listed here are examples and do not exclude the identification of other changes. If deemed appropriate, samples for results confirmation may be collected prior to implementation of operational changes.
2. The lines of evidence to evaluate hydraulic capture are presented in Section 4.3, Vol. 2 O&M Manual.
3. Potential actions under the contingency plan include opening shallow screen intervals for extraction.
4. If operational adjustments prove to be ineffective at achieving system performance, then the adaptive operations process will flow to the Contingency Plan

Acronyms and Abbreviations:
Cr(VI)- hexavalent chromium
IRL - Inner Recirculation Loop

Figure 2.2-5. Inner Recirculation Loop Extraction Decision Rules/Operational Framework

OPERATIONS AND MAINTENANCE MANUAL, VOLUME 2: SAMPLING AND MONITORING PLAN

PG&E TOPOCK COMPRESSOR STATION NEEDLES, CALIFORNIA

ARCADIS Design & Consultancy for natural and built assets

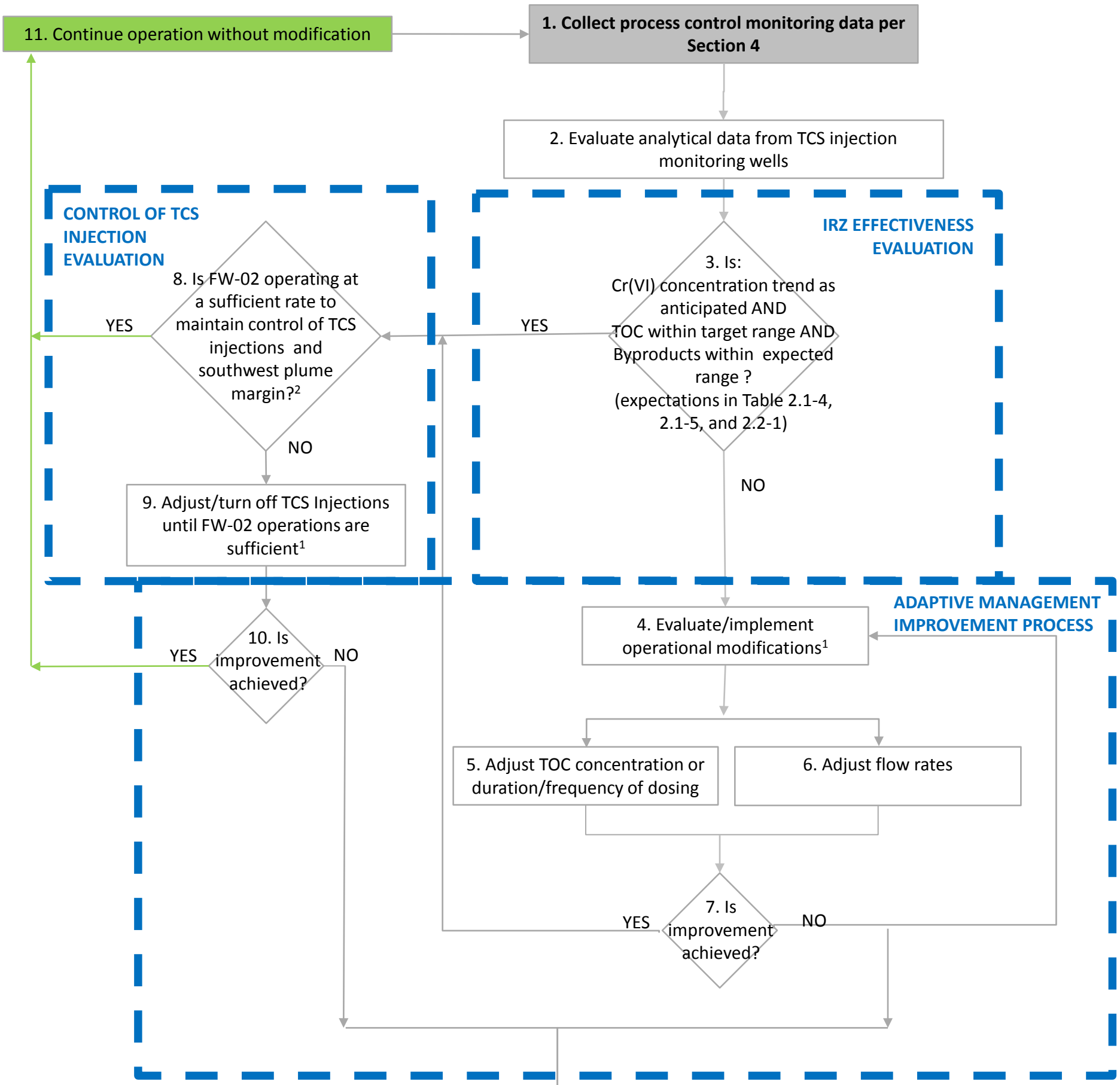

Notes:

1. The operational modifications listed here are examples and do not exclude the identification of other changes. If deemed appropriate, samples for results confirmation may be collected prior to implementation of operational changes.
2. Lines of evidence for this evaluation include trends in analytical data and groundwater elevation data/observed hydraulic gradients per Section 2.2.3.
3. If operational adjustments prove to be ineffective at achieving system performance, then the adaptive operations process will flow to the Contingency Plan

Acronyms and Abbreviations:
TCS - Topock Compressor Station
TOC - total organic carbon

Figure 2.2-6. TCS Recirculation Loop Injection Decision Rules/Operational Framework

OPERATIONS AND MAINTENANCE MANUAL, VOLUME 2: SAMPLING AND MONITORING PLAN

PG&E TOPOCK COMPRESSOR STATION NEEDLES, CALIFORNIA

ARCADIS Design & Consultancy for natural and built assets

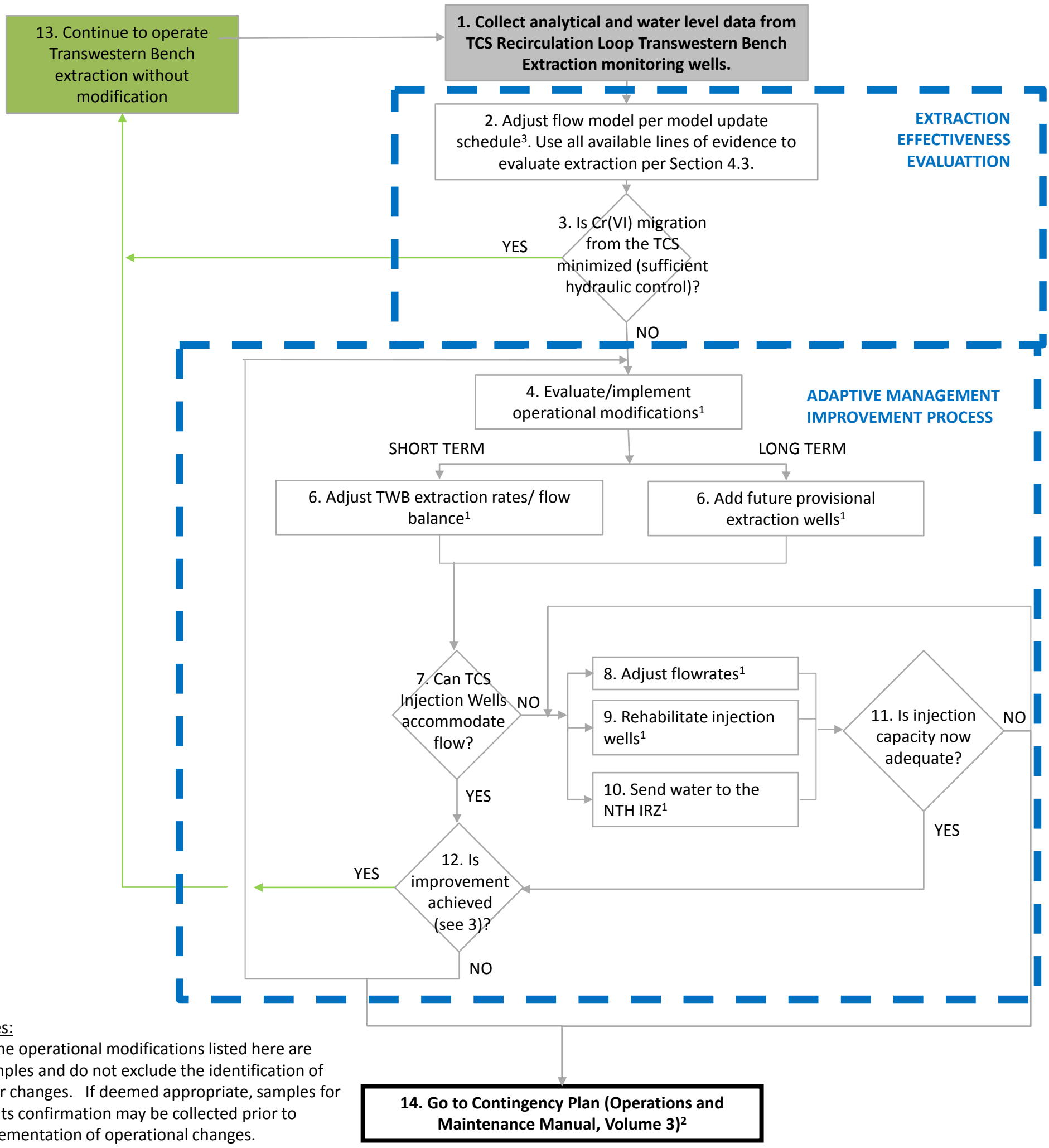

Notes:

1. The operational modifications listed here are examples and do not exclude the identification of other changes. If deemed appropriate, samples for results confirmation may be collected prior to implementation of operational changes.
2. If operational adjustments prove to be ineffective at achieving system performance, then the adaptive operations process will flow to the Contingency Plan
3. Model updates are planned to be conducted approximately annually during start-up and during five-year reviews thereafter.

Acronyms and Abbreviations:
Cr(VI)- hexavalent chromium
NTH - National Trails Highway
IRZ - in-situ reactive zone
TCS - Topock Compressor Station
TWB - Transwestern Bench

Figure 2.2-7. TCS Recirculation Loop Transwestern Bench Extraction Decision Rules/Operational Framework

OPERATIONS AND MAINTENANCE MANUAL, VOLUME 2: SAMPLING AND MONITORING PLAN

PG&E TOPOCK COMPRESSOR STATION NEEDLES, CALIFORNIA

ARCADIS Design & Consultancy for natural and built assets

13. Continue to operate without modification

1. Collect analytical and water level data from TCS Recirculation Loop East Ravine monitoring wells and surface water sampling.

2. Adjust flow model per model update schedule[3]. Use all available lines of evidence to evaluate capture per Section 4.3.

HYDRAULIC CONTROL EVALUATTION

3. Is Cr(VI) controlled by the East Ravine Extraction Wells?

YES

NO

ADAPTIVE MANAGEMENT IMPROVEMENT PROCESS

4. Evaluate/implement operational modifications[1]

SHORT TERM

LONG TERM

5. Adjust East Ravine extraction rates if existing wells are not operating at maximum capacity. If already operating at maximum capacity, add provisional East Ravine Extraction Wells.

6. Add future provisional East Ravine Extraction Wells

7. Can TCS Injection Wells accommodate increased flow?

NO

8. Adjust flowrates[1]

9. Rehabilitate injection wells[1]

10. Send water to the NTH IRZ[1]

11. Is injection capacity now adequate?

NO

YES

12. Is improvement achieved?

YES

NO

14. Go to Contingency Plan (Operations and Maintenance Manual, Volume 3)[2]

Acronyms and Abbreviations:
TCS - Topock Compressor Station

Notes:
1.The operational modifications listed here are examples and do not exclude the identification of other changes. If deemed appropriate, samples for results confirmation may be collected prior to implementation of operational changes.
2.If operational adjustments prove to be ineffective at achieving system performance, then the adaptive operations process will flow to the Contingency Plan.
3.Model updates are planned to be conducted approximately annually during start-up and during five-year reviews thereafter.

Figure 2.2-8. TCS Recirculation Loop East Ravine Extraction Decision Rules/Operational Framework

OPERATIONS AND MAINTENANCE MANUAL, VOLUME 2: SAMPLING AND MONITORING PLAN

PG&E TOPOCK COMPRESSOR STATION
NEEDLES, CALIFORNIA

ARCADIS Design & Consultancy for natural and built assets

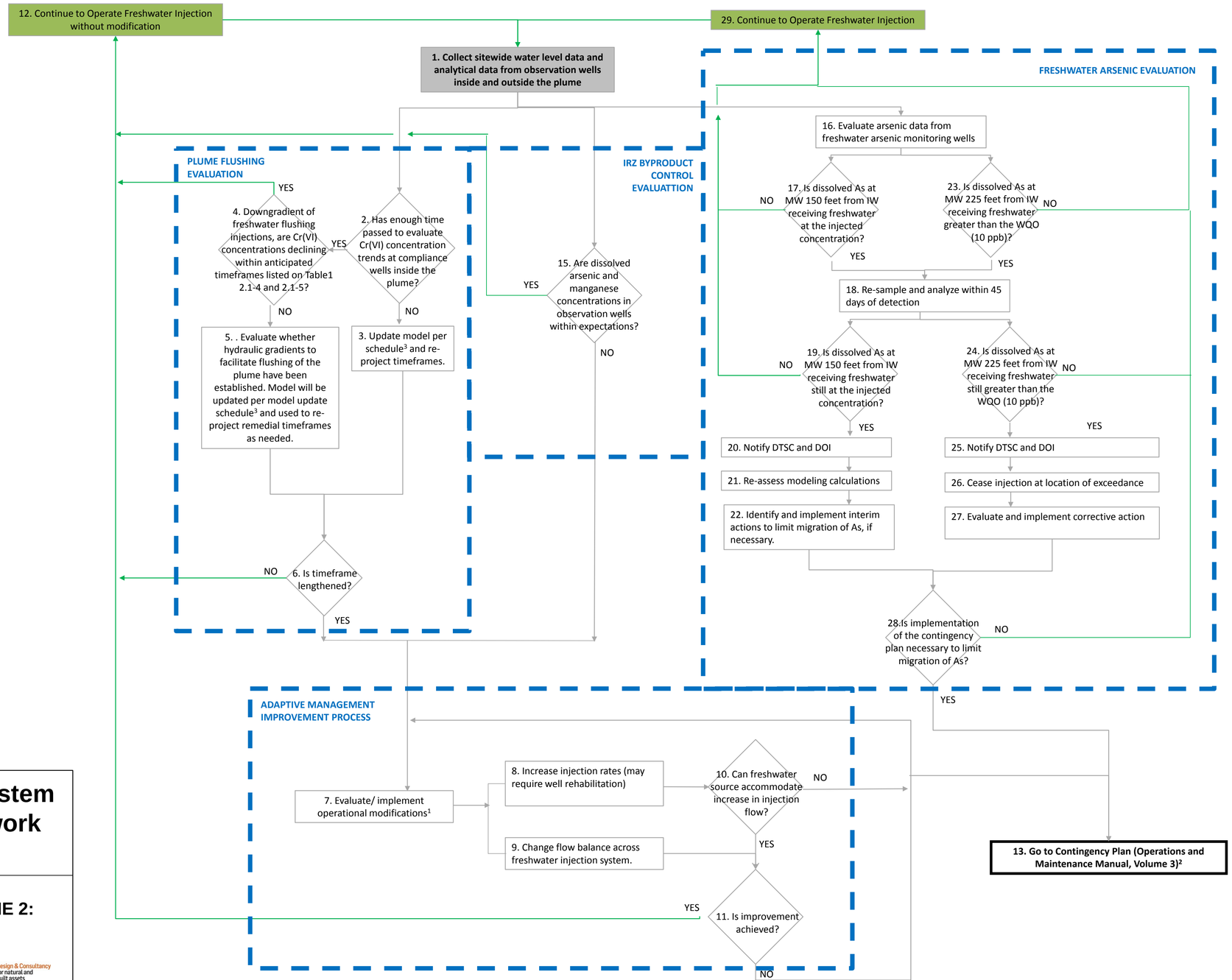

Notes:

1. The operational modifications listed here are examples and do not exclude the identification of other changes. If deemed appropriate, samples for results confirmation may be collected prior to implementation of operational changes.
2. If operational adjustments prove to be ineffective at achieving system performance, then the adaptive operations process will flow to the Contingency Plan (O&M Manual, Volume 3)
3. Model updates are planned to be conducted approximately annually during start-up and during five-year reviews thereafter.

Acronyms and Abbreviations:
As - arsenic, Cr(VI) - hexavalent chromium, DOI- Department of the Interior, DTSC - Department of Toxic Substances Control, IW - injection well, MW - monitoring well, ppb - parts per billion, WQO – water quality objective

Figure 2.2-9. Freshwater Injection System Decision Rules/Operational Framework

OPERATIONS AND MAINTENANCE MANUAL, VOLUME 2: SAMPLING AND MONITORING PLAN

PG&E TOPOCK COMPRESSOR STATION
NEEDLES, CALIFORNIA

ARCADIS Design & Consultancy for natural and built assets

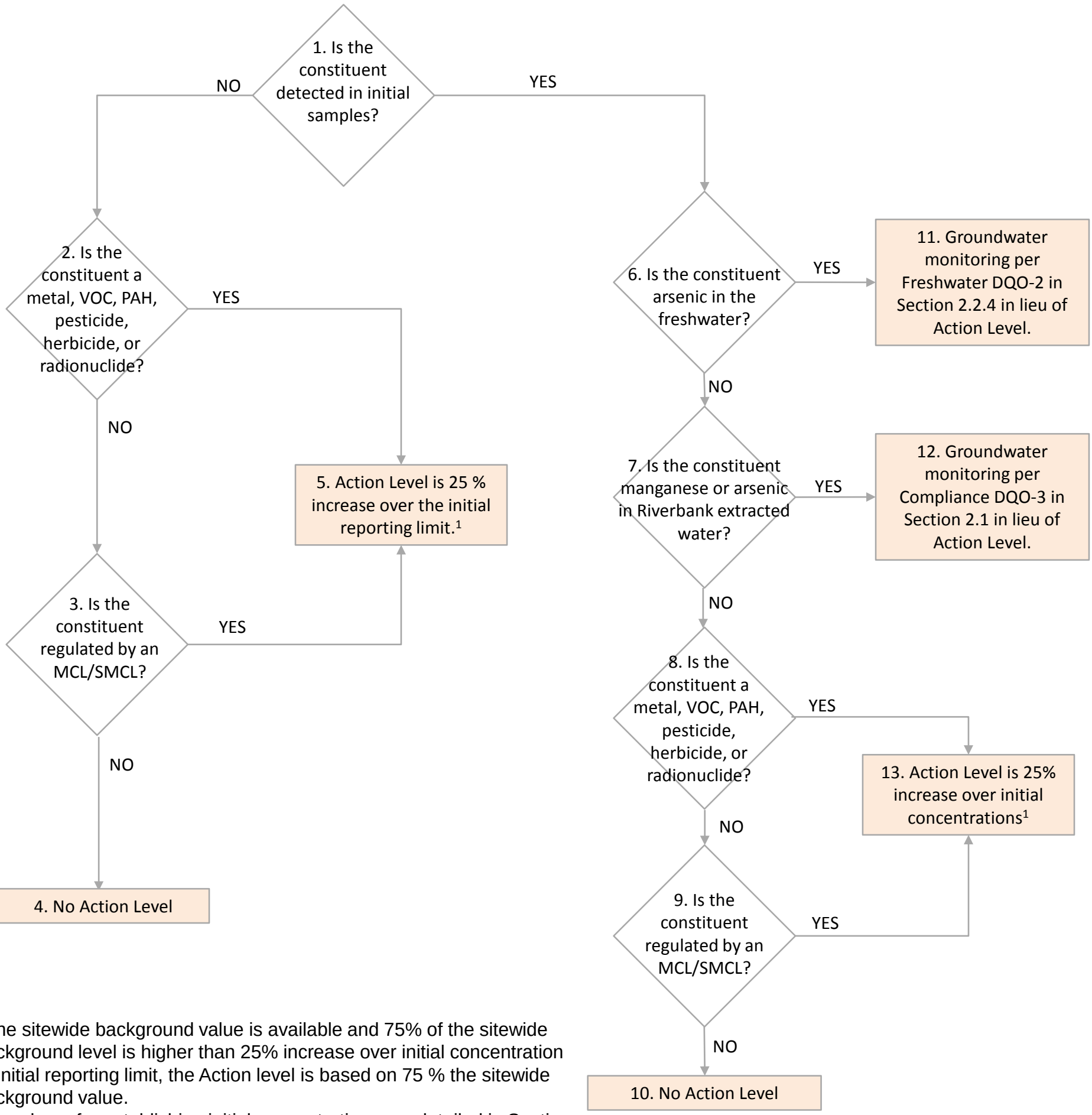

Notes

1. If the sitewide background value is available and 75% of the sitewide background level is higher than 25% increase over initial concentration or initial reporting limit, the Action level is based on 75 % the sitewide background value.
2. Procedures for establishing initial concentrations are detailed in Section 2.2.2 and 2.2.4.

Abbreviations

DQO – data quality objective
MCL - maximum contaminant level
PAH – polycyclic aromatic hydrocarbon
SMCL - secondary maximum contaminant level
TSS - total suspended solids
VOC – volatile organic compound

Figure 2.2-10. Action Levels Injection of Freshwater and Water Extracted from the Riverbank

OPERATIONS AND MAINTENANCE MANUAL, VOLUME 2: SAMPLING AND MONITORING PLAN

PG&E TOPOCK COMPRESSOR STATION
NEEDLES, CALIFORNIA

ARCADIS Design & Consultancy for natural and built assets

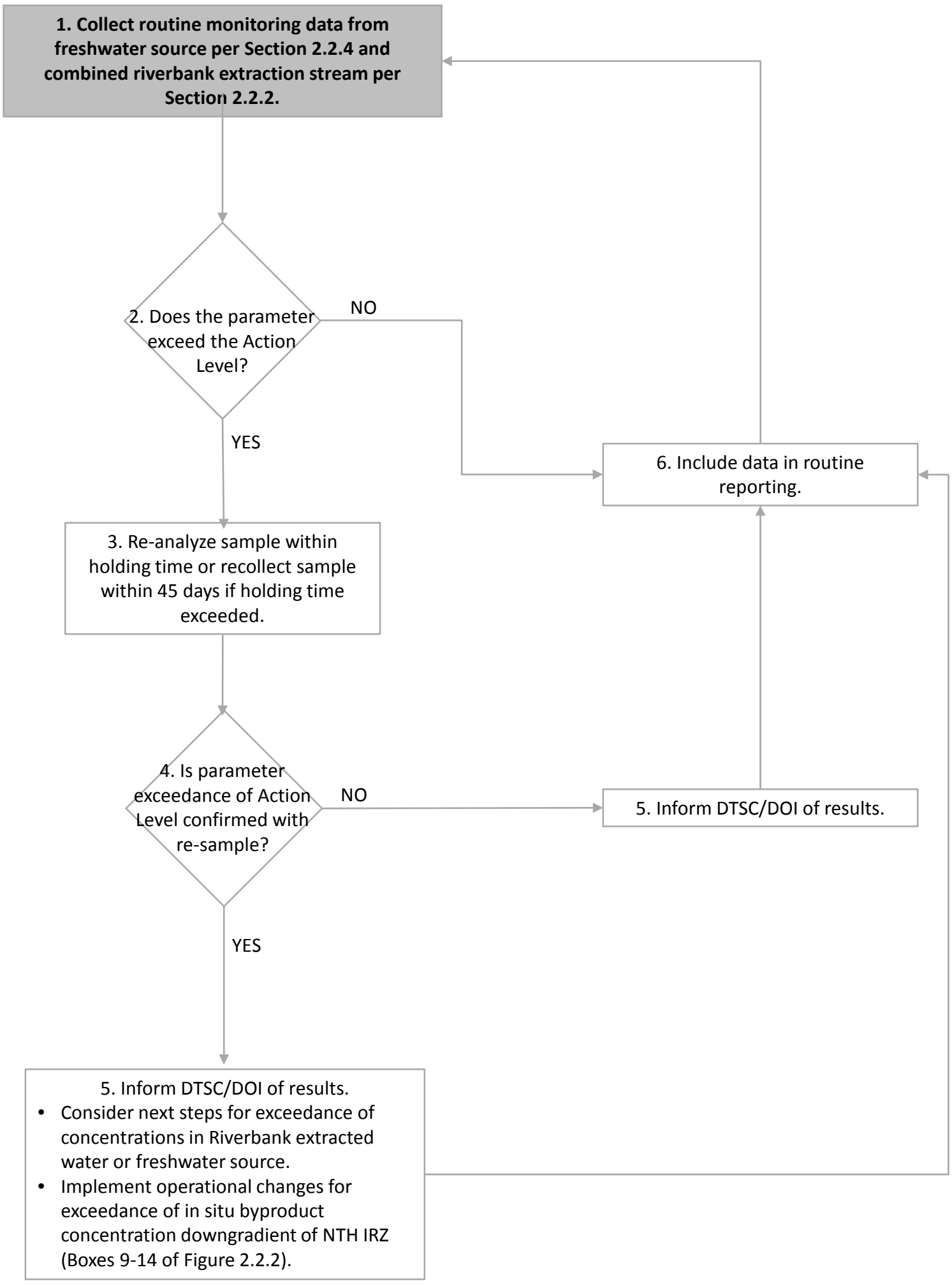

Figure 2.2-11. Protocol for Notification of Confirmed Exceedance of Action Levels

OPERATIONS AND MAINTENANCE MANUAL, VOLUME 2: SAMPLING AND MONITORING PLAN

PG&E TOPOCK COMPRESSOR STATION NEEDLES, CALIFORNIA

ARCADIS Design & Consultancy for natural and built assets

SECTION 3

Remedy Compliance Monitoring

As described in Section 2, groundwater and surface water will be periodically sampled to ensure that RAO-2, -3, and -4 are being met as part of the compliance monitoring program. This section will describe the sampling locations, anticipated changes in concentrations and timeframes, and sampling analytes and frequencies for the monitoring program.

3.1 Monitoring Locations, Anticipated Concentration Changes, and Timeframes

The compliance monitoring program will include pre-existing monitoring wells, 35 proposed future monitoring wells, and surface water sampling locations. For the compliance monitoring program, monitoring wells and surface water sampling locations are shown on Figures 2.1-1 and 2.1-2, respectively, and listed in Tables 2.1-2 and 2.1-3. Monitoring well locations are also located on maps representing the current Cr(VI) plume, at different depth intervals, in Figures 3.1-1, 3.1-2, 3.1-3, and 3.1-4. Figures 3.1-5, 3.1-6, 3.1-7, and 3.1-8 show the well network overlaid with the predicted manganese distribution at 30 years. Figures 3.1-9, 3.1-10, 3.1-11, and 3.1-12 show the well network overlaid with the predicted arsenic distribution at 30 years. Predicted manganese and arsenic distributions are based on the results of the base case solute transport model, described in Appendix B of the Final BOD. This section describes the optimized monitoring program for the Compliance DQOs detailed in Section 2.1.

The surface water sampling network includes ten river channel sampling points, four shoreline sampling points located along the Colorado River, and two surface water sampling points in the East Ravine. In-channel surface water samples are collected with a peristaltic pump from a boat at two depths: 1 foot from the river bottom and 1 foot from the water surface. Shoreline samples are collected with a bailer or sampling pole from 4 to 6 inches below the water surface. These details are described in the Depth-Specific Surface Water Sampling SOP (SOP-A4). These locations are currently being sampled quarterly as part of the ongoing Interim Measures Performance Monitoring Program; therefore no new locations are being proposed. Locations C-NR1, C-NR3, C-NR4, C-CON, and RRB are located upriver from the site, with C-CON and RRB capturing the potential effects of small surface water inlets to the main channel. Similarly, C-MAR is located at the outlet of the Topock Marsh to characterize surface water inputs that may affect water quality downstream of the site. Shoreline and river channel sampling points R-19, R-28, R-63, C-R27, C-BNS, and C-R-22A are located on the river bank or in the channel downgradient of the River Bank Extraction Wells and the TCS Recirculation Loop East Ravine Extraction Wells. Finally, river channel points C-I-3 and C-TAZ will be sampled to monitor for changes in river chemistry in the body of the river channel directly downstream of the site.

The outer compliance monitoring well network consists of wells that lie outside of the Cr(VI) plume boundary, defined as the 32 μg/L Cr(VI) concentration contour (Figure 2.1-1, Table 2.1-3), based on the most recent groundwater monitoring data. The outer compliance well network has been designed to obtain adequate coverage surrounding the plume, while taking full advantage of the pre-existing monitoring well network and minimizing the need for additional wells. New monitoring wells proposed as part of the Process Control Monitoring Program (Section 4) will also be used for compliance monitoring. The majority of the existing wells are located on the eastern portion of the site within the floodplain, downgradient of the Cr(VI) plume, since this area will need to be monitored most intensively to assess the potential Cr(VI) plume migration into the river. Outer compliance wells are also located to the northwest of the plume, in the vicinity of the IRL and freshwater injection areas (Figure 2.1-1). Other regions to the north, west, and south of the plume do not have high well densities due to a lack of suitable installation areas (e.g., culturally-sensitive land to the northwest and complex topography and access restrictions in the southwest).

The outer compliance wells will be sampled for Cr(VI) and Cr(T) to evaluate RAO 3. In addition, several of the outer compliance wells and surface water points will also be sampled for by-products. All of the river bank

extraction monitoring wells listed within the Process Control Monitoring Program will be sampled for manganese and arsenic as part of the Compliance Monitoring Plan; anticipated by-product concentrations and arrival timeframes for this area are discussed in Section 4. By-products will also be monitored in wells in the vicinity of the IRL injection wells northwest of the plume. Solute transport model results indicate that arsenic and/or manganese generated by IRL injections will not reach these wells within the remedial timeframe; therefore the wells will be monitored to assess this prediction (manganese predictions shown with monitoring well network on Figures 3.1-5 through 3.1-8). Outer compliance wells closer to injection points, located in the vicinity of the IRL Injection Wells (Figure 2.1-1), will be monitored to assess the likelihood of arsenic and manganese concentrations exceeding anticipated ranges as determined by solute transport model results. Anticipated by-product concentrations and arrival timeframes for these wells are discussed in Section 4.

The inner compliance network consists of wells that currently lie inside of the Cr(VI) plume boundary based on the most recent groundwater monitoring data. These wells are also shown on Figure 2.1-1 as well as Figures 3.1-1, 3.1-2, 3.1-3, and 3.1-4. Wells from across the site within the plume will be used to monitor Cr(VI) concentrations as the remedy proceeds and demonstrate removal of Cr(VI) and Cr(T) from groundwater. To increase spatial coverage within the center of the plume where the existing monitoring well network did not provide coverage, new monitoring well locations are being proposed as part of the Compliance Monitoring Program (including MW-L, MW-M, and MW-N; Figure 2.1-1, Table 2.1-2). As the Cr(VI) plume shrinks, wells will potentially be re-categorized as outer compliance monitoring wells, and their functions will change accordingly. In this way, the compliance well network will evolve as the remedy proceeds.

The currently anticipated Cr(VI) remediation timeframe for the well classifications is listed in Tables 2.1-4 and 2.1-5. The anticipated concentrations and timeframes are based on nominal baseline values and current solute transport model predictions, as presented in Appendix B of the Final BOD. These estimates will be updated as the system is installed and as baseline sampling is conducted. The estimates will also be adjusted during remedy implementation as data are collected during operations and the solute transport model is refined. Model updates are planned to be conducted approximately annually during start-up and during five-year reviews thereafter. Cr(VI) remediation timeframes vary from less than six months for wells in the vicinity of carbon injection points, to approximately 30 years for zones just upgradient of the IRZ that will be the last to be flushed as the plume is flushed towards the NTH IRZ line.

3.2 Sampling Analytes and Frequencies

Sampling analytes and frequencies for the Compliance Monitoring Program are summarized in Table 2.1-3. The sampling program presented is an initial program. As data are collected during remedy installation and initial operations, the conceptual site model (CSM) will be updated. The monitoring program may be refined based on baseline data prior to remedy operation, and the sampling program will be revisited and refined after the first two years of operation.

All compliance monitoring wells and surface water sampling locations will be sampled for Cr(VI) and Cr(T). Field sampling will follow the protocol outlined in Section 7 of this plan and will also include collection of field parameters (pH, DO, ORP, temperature, and specific conductance). Regardless of sampling frequency specified in the Compliance Monitoring Program, baseline data will be collected from all monitoring wells in the program for the full suite of analytes listed in Table 4.2-1 in Section 4 where these data do not already exist or have not been collected within the past two years.

For wells that are also sampled for process control monitoring, the sampling frequencies follow the frequencies proposed within the Process Control Monitoring Program (Section 4; see Table 4.2-1). Outer compliance wells that are not part of the Process Control Monitoring Program will either be sampled annually or at their current sampling frequency, as outlined in Table 2.1-3. Inner compliance wells not within the Process Control Monitoring Program will be sampled at the frequency listed in Table 2.1-3, depending on the anticipated Cr(VI) concentration trends as summarized in Tables 2.1-4 and 2.1-5.

Water level measurements will be collected at all locations on a quarterly basis for comparison against groundwater flow model predictions. The frequency of water level collection will be re-assessed after the first two years of operation. These results will be used to measure hydraulic gradients and directions as lines of evidence in the assessment of hydraulic plume control, as discussed in Section 4.3. In addition, water levels will potentially be monitored on a continuous basis via in-well transducers in specific wells noted on Tables 2.1-2 and 2.1-3. These wells are selected based on their assigned function within the groundwater remedy.

Outer compliance wells near and downgradient of carbon injection points will be monitored for the IRZ by-products manganese and arsenic to assess whether concentrations remain within expected ranges. Monitoring frequencies will follow the same frequencies outlined for Cr(VI).

Locations, analytes, and sampling frequencies within the Compliance Monitoring Program overlap substantially with the Process Control Monitoring Program, outlined in Section 4. In these cases, the same analytical results are intended to be used for both compliance and process-control monitoring.

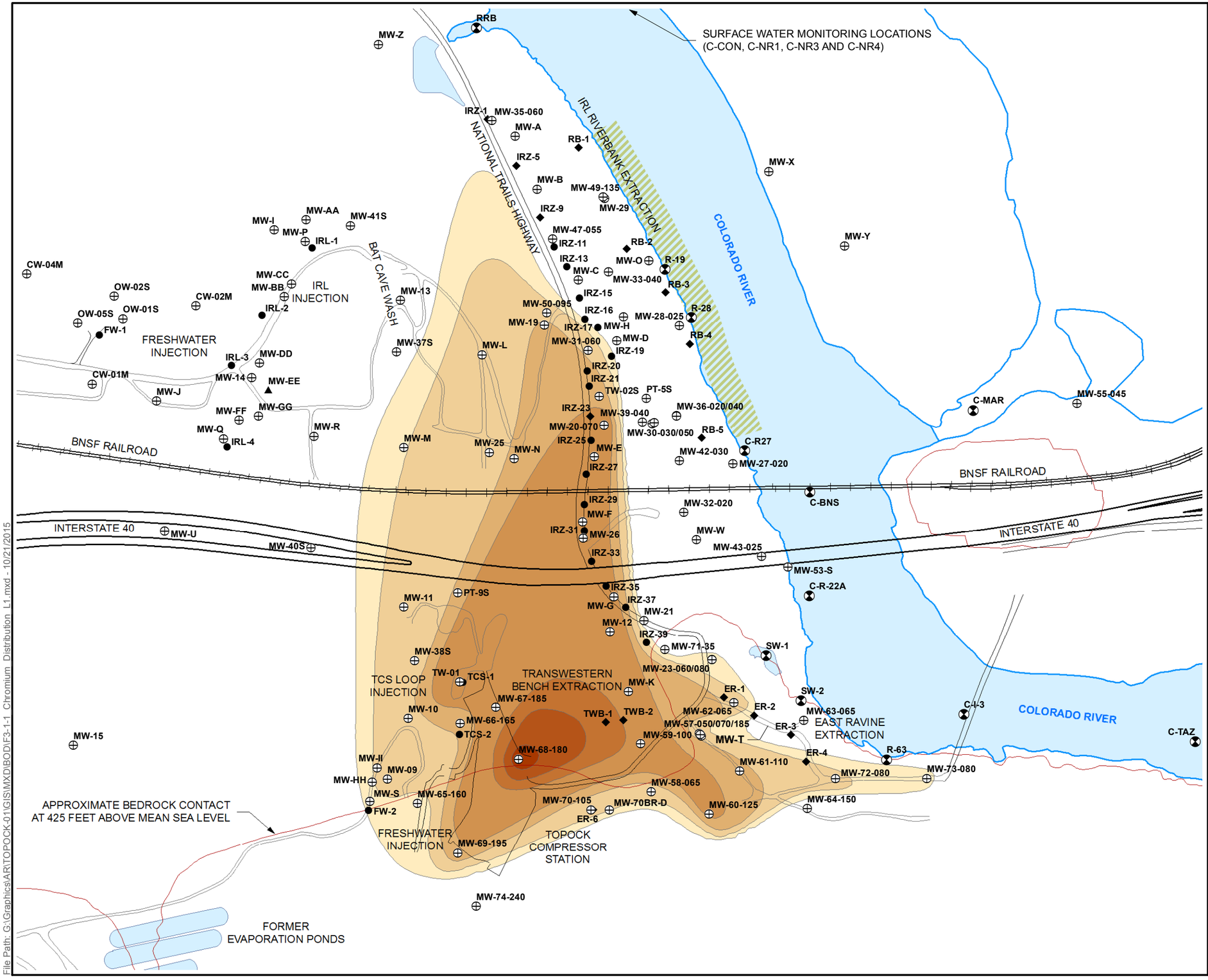

LEGEND

- MONITORING WELL
- FUTURE PROVISIONAL MONITORING WELL
- SURFACE WATER SAMPLE LOCATION
- REMEDIATION WELL (INJECTION)
- REMEDIATION WELL (EXTRACTION)
- AREA FOR POTENTIAL SLANT WELL SCREENS

CHROMIUM CONCENTRATION (ppb)

- 32 - 100
- 100 - 500
- 500 - 1000
- 1000 - 5000
- 5000 - 10000
- 10000 - 15000
- >15000

ABBREVIATIONS

TCS TOPOCK COMPRESSOR STATION
IRL INNER RECIRCULATION LOOP

N

0 500 1,000 1,500

1 " = 500 '

PACIFIC GAS AND ELECTRIC COMPANY
NEEDLES, CALIFORNIA
OPERATION AND MAINTENANCE MANUAL
VOLUME 2: SAMPLING AND ANALYSIS PLAN

MONITORING NETWORK AND BASELINE Cr(VI) DISTRIBUTION LAYER 1

ARCADIS Design & Consultancy for natural and built assets

FIGURE
3.1-1

File Path: G:\Graphics\ARITOPOCK-01\GIS\MXD\BOD\F3.1-1 Chromium Distribution L1.mxd - 10/21/2015

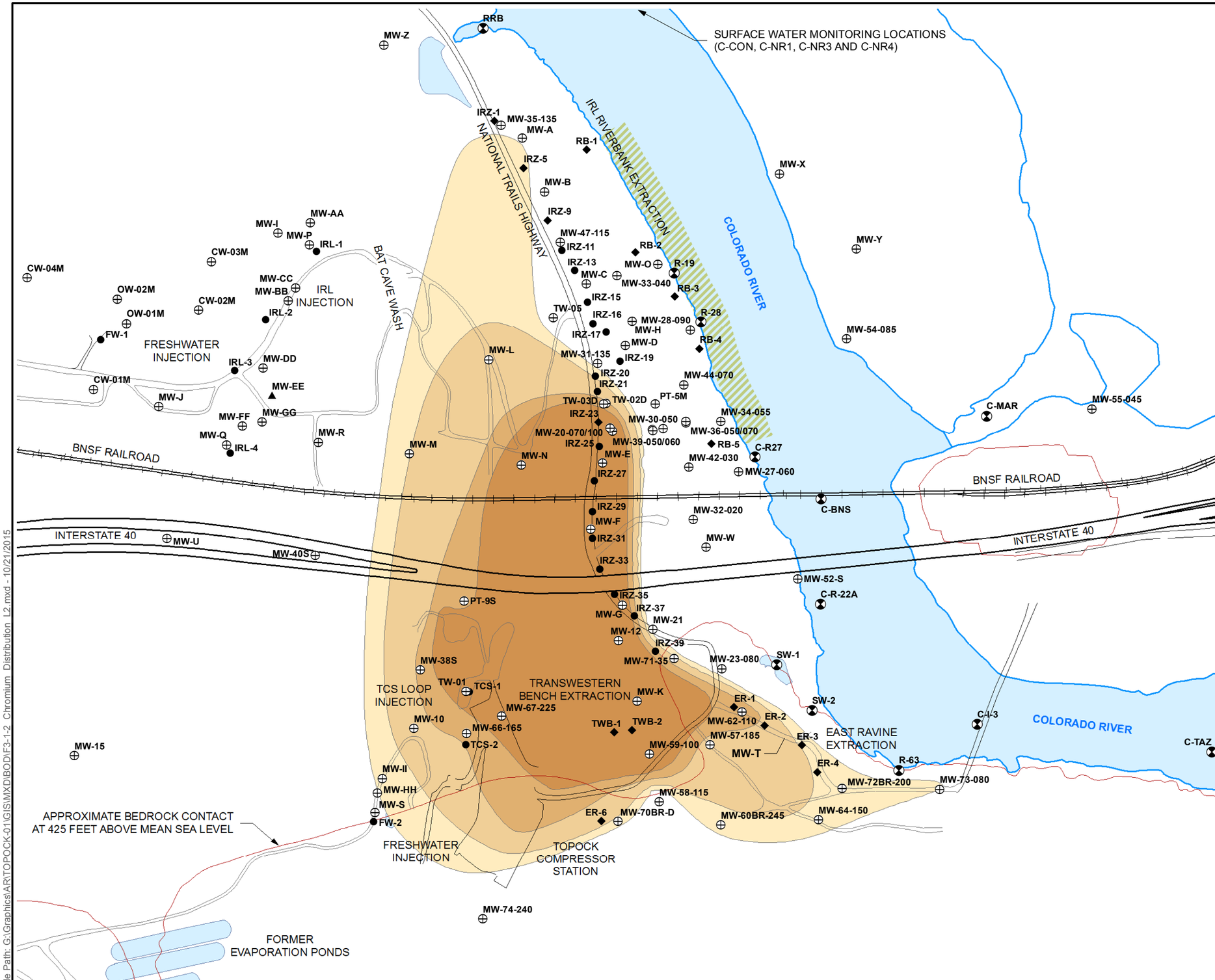

LEGEND

- MONITORING WELL
- FUTURE PROVISIONAL MONITORING WELL
- SURFACE WATER SAMPLE LOCATION
- REMEDIATION WELL (INJECTION)
- REMEDIATION WELL (EXTRACTION)
- AREA FOR POTENTIAL SLANT WELL SCREENS

CHROMIUM CONCENTRATION (ppb)

- 32 - 100
- 100 - 500
- 500 - 1000
- 1000 - 5000

ABBREVIATIONS

TCS TOPOCK COMPRESSOR STATION
IRL INNER RECIRCULATION LOOP

N

0 500 1,000 1,500

1 " = 500 '

PACIFIC GAS AND ELECTRIC COMPANY
NEEDLES, CALIFORNIA
OPERATION AND MAINTENANCE MANUAL
VOLUME 2: SAMPLING AND ANALYSIS PLAN

MONITORING NETWORK AND BASELINE Cr(VI) DISTRIBUTION LAYER 2

ARCADIS Design & Consultancy for natural and built assets

FIGURE
3.1-2

File Path: G:\Graphics\AR\TOPOCK-01\GIS\MXD\BOD\F3-1-2_Chromium_Distribution_L2.mxd - 10/21/2015

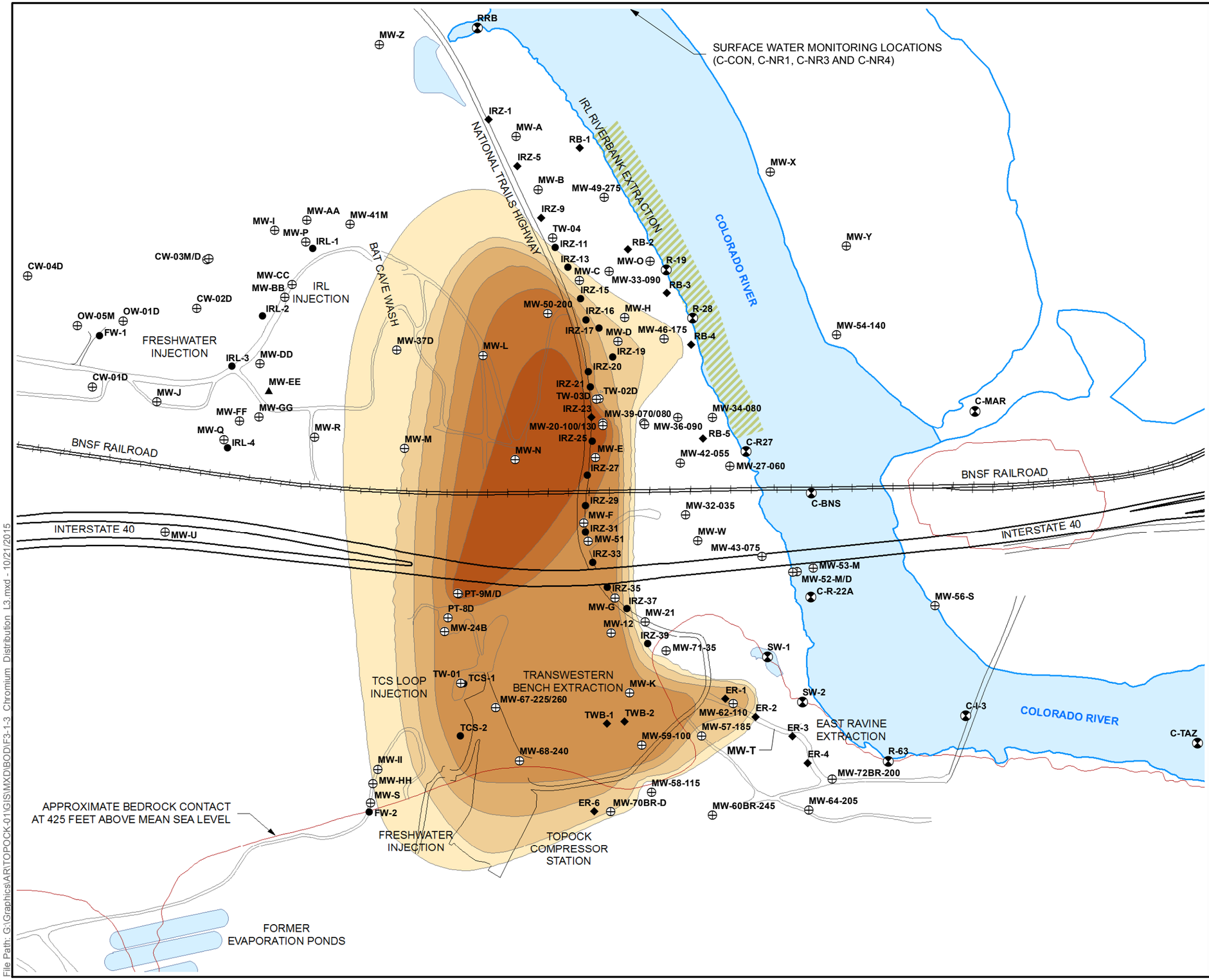

LEGEND

- MONITORING WELL
- FUTURE PROVISIONAL MONITORING WELL
- SURFACE WATER SAMPLE LOCATION
- REMEDIATION WELL (INJECTION)
- REMEDIATION WELL (EXTRACTION)
- AREA FOR POTENTIAL SLANT WELL SCREENS

CHROMIUM CONCENTRATION (ppb)

- 32 - 100
- 100 - 500
- 500 - 1000
- 1000 - 5000
- 5000 - 10000
- 10000 - 15000

ABBREVIATIONS

TCS TOPOCK COMPRESSOR STATION
IRL INNER RECIRCULATION LOOP

N

0 500 1,000 1,500

1 " = 500 '

PACIFIC GAS AND ELECTRIC COMPANY
NEEDLES, CALIFORNIA
OPERATION AND MAINTENANCE MANUAL
VOLUME 2: SAMPLING AND ANALYSIS PLAN

MONITORING NETWORK AND BASELINE Cr(VI) DISTRIBUTION LAYER 3

ARCADIS Design & Consultancy for natural and built assets

FIGURE
3.1-3

File Path: G:\Graphics\AR\TOPOCK-01\GIS\MXD\BOD\F3.1-3_Chromium_Distribution_L3.mxd - 10/21/2015

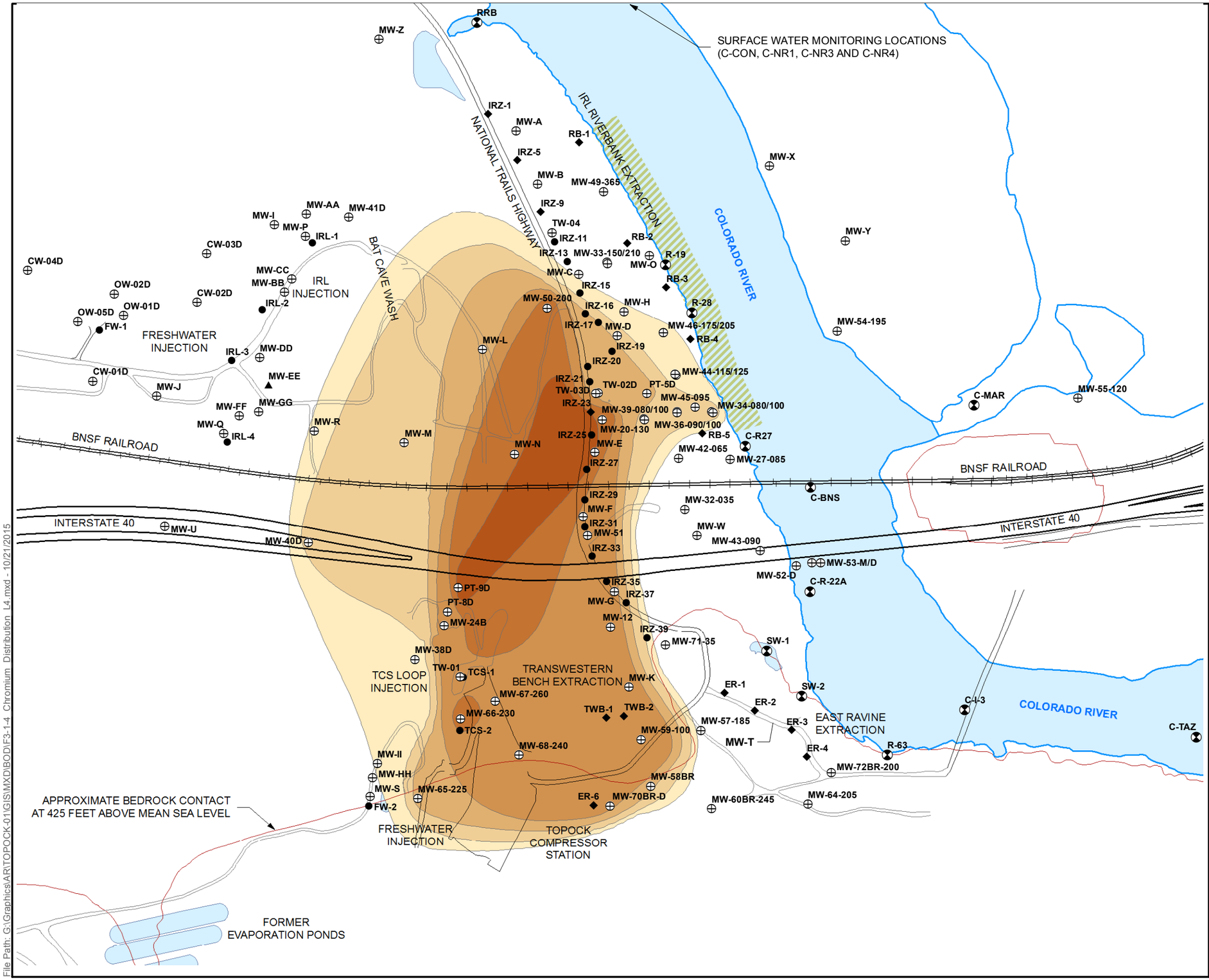

LEGEND

- MONITORING WELL
- FUTURE PROVISIONAL MONITORING WELL
- SURFACE WATER SAMPLE LOCATION
- REMEDIATION WELL (INJECTION)
- REMEDIATION WELL (EXTRACTION)
- AREA FOR POTENTIAL SLANT WELL SCREENS

CHROMIUM CONCENTRATION (ppb)

- 32 - 100
- 100 - 500
- 500 - 1000
- 1000 - 5000
- 5000 - 10000
- 10000 - 15000

ABBREVIATIONS

TCS TOPOCK COMPRESSOR STATION
IRL INNER RECIRCULATION LOOP

N

0 500 1,000 1,500

1 " = 500 '

PACIFIC GAS AND ELECTRIC COMPANY
NEEDLES, CALIFORNIA
OPERATION AND MAINTENANCE MANUAL
VOLUME 2: SAMPLING AND ANALYSIS PLAN

MONITORING NETWORK AND BASELINE Cr(VI) DISTRIBUTION LAYER 4

ARCADIS Design & Consultancy for natural and built assets

FIGURE
3.1-4

File Path: G:\Graphics\ARITOPOCK-01\GIS\MXD\BOD\F3.1-4 Chromium Distribution l4.mxd - 10/21/2015

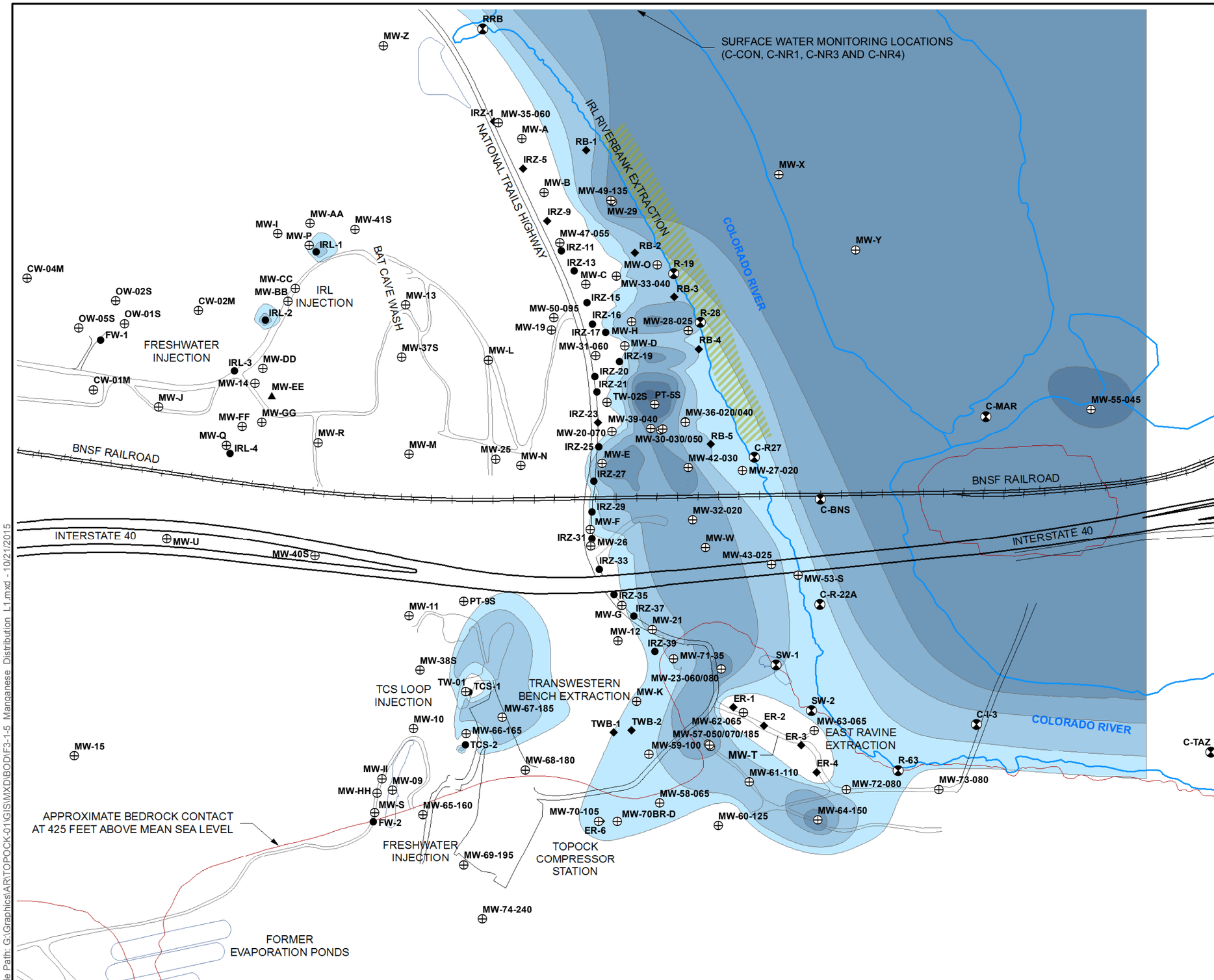

LEGEND

- MONITORING WELL
- FUTURE PROVISIONAL MONITORING WELL
- SURFACE WATER SAMPLE LOCATION
- REMEDIATION WELL (INJECTION)
- REMEDIATION WELL (EXTRACTION)
- AREA FOR POTENTIAL SLANT WELL SCREENS

MANGANESE CONCENTRATION (ppm)

- 0.13 - 0.25
- 0.25 - 0.50
- 0.50 - 0.75
- 0.75 - 1.00
- 1.00 - 2.00
- >2.00

ABBREVIATIONS

TCS TOPOCK COMPRESSOR STATION
IRL INNER RECIRCULATION LOOP

N

0 500 1,000 1,500

1 " = 500 '

PACIFIC GAS AND ELECTRIC COMPANY
NEEDLES, CALIFORNIA
OPERATION AND MAINTENANCE MANUAL
VOLUME 2: SAMPLING AND ANALYSIS PLAN

MONITORING NETWORK AND 30-YEAR MANGANESE DISTRIBUTION LAYER 1

ARCADIS Design & Consultancy for natural and built assets

FIGURE
3.1-5

File Path: G:\Graphics\AR\TOPOCK-01\GIS\MXD\BOD\F3-1-5_Manganese_Distribution_L1.mxd - 10/21/2015

SURFACE WATER MONITORING LOCATIONS
(C-CON, C-NR1, C-NR3 AND C-NR4)

RRB
MW-Z
IRZ-1
MW-35-135
MW-A
RB-1
IRZ-5
MW-B
IRZ-9
MW-47-115
IRZ-11
RB-2
IRZ-13
MW-O
R-19
MW-C
MW-33-040
RB-3
IRZ-15
TW-05
IRZ-16
MW-28-090
R-28
MW-H
IRZ-17
MW-D
RB-4
MW-31-135
IRZ-19
IRZ-20
IRZ-21
MW-44-070
TW-03D
TW-02D
PT-5M
IRZ-23
MW-34-055
MW-30-050
MW-20-070/100
MW-36-050/070
IRZ-25
MW-39-050/060
RB-5
C-R27
MW-E
MW-42-030
IRZ-27
MW-27-060
IRZ-29
MW-32-020
C-BNS
MW-F
IRZ-31
MW-W
IRZ-33
MW-52-S
IRZ-35
C-R-22A
PT-9S
MW-G
IRZ-37
MW-21
MW-12
IRZ-39
MW-71-35
MW-23-080
SW-1
MW-38S
TW-01
TCS-1
MW-67-225
MW-K
ER-1
SW-2
MW-10
MW-66-165
TWB-1
TWB-2
ER-2
MW-62-110
C-I-3
MW-57-185
ER-3
MW-59-100
MW-T
ER-4
R-63
MW-15
TCS-2
MW-II
MW-72BR-200
MW-73-080
MW-HH
MW-58-115
MW-S
ER-6
MW-70BR-D
MW-60BR-245
MW-64-150
FW-2
MW-74-240
C-TAZ
MW-55-045
C-MAR
MW-54-085
MW-Y
MW-X
MW-L
MW-M
MW-N
MW-R
MW-Q
IRL-4
MW-FF
MW-GG
MW-J
MW-EE
CW-01M
IRL-3
MW-DD
FW-1
OW-01M
OW-02M
CW-02M
IRL-2
MW-BB
MW-CC
IRL INJECTION
CW-03M
CW-04M
MW-P
IRL-1
MW-I
MW-AA
MW-U
MW-40S

IRL RIVERBANK EXTRACTION
NATIONAL TRAILS HIGHWAY
BAT CAVE WASH
COLORADO RIVER
BNSF RAILROAD
INTERSTATE 40
FRESHWATER INJECTION
TRANSWESTERN BENCH EXTRACTION
TCS LOOP INJECTION
EAST RAVINE EXTRACTION
TOPOCK COMPRESSOR STATION
FORMER EVAPORATION PONDS
APPROXIMATE BEDROCK CONTACT AT 425 FEET ABOVE MEAN SEA LEVEL

LEGEND

- MONITORING WELL
- FUTURE PROVISIONAL MONITORING WELL
- SURFACE WATER SAMPLE LOCATION
- REMEDIATION WELL (INJECTION)
- REMEDIATION WELL (EXTRACTION)
- AREA FOR POTENTIAL SLANT WELL SCREENS

MANGANESE CONCENTRATION (ppm)

- 0.13 - 0.25
- 0.25 - 0.50
- 0.50 - 0.75
- 0.75 - 1.00
- 1.00 - 2.00
- >2.0

ABBREVIATIONS

TCS TOPOCK COMPRESSOR STATION
IRL INNER RECIRCULATION LOOP

N

0 500 1,000 1,500
1 " = 500 '

PACIFIC GAS AND ELECTRIC COMPANY
NEEDLES, CALIFORNIA
OPERATION AND MAINTENANCE MANUAL
VOLUME 2: SAMPLING AND ANALYSIS PLAN

MONITORING NETWORK AND 30-YEAR MANGANESE DISTRIBUTION LAYER 2

ARCADIS Design & Consultancy for natural and built assets

FIGURE
3.1-6

File Path: G:\Graphics\ARTOPOCK-01\GIS\MXD\BOD\F3.1-6 Manganese Distribution L2.mxd - 10/21/2015

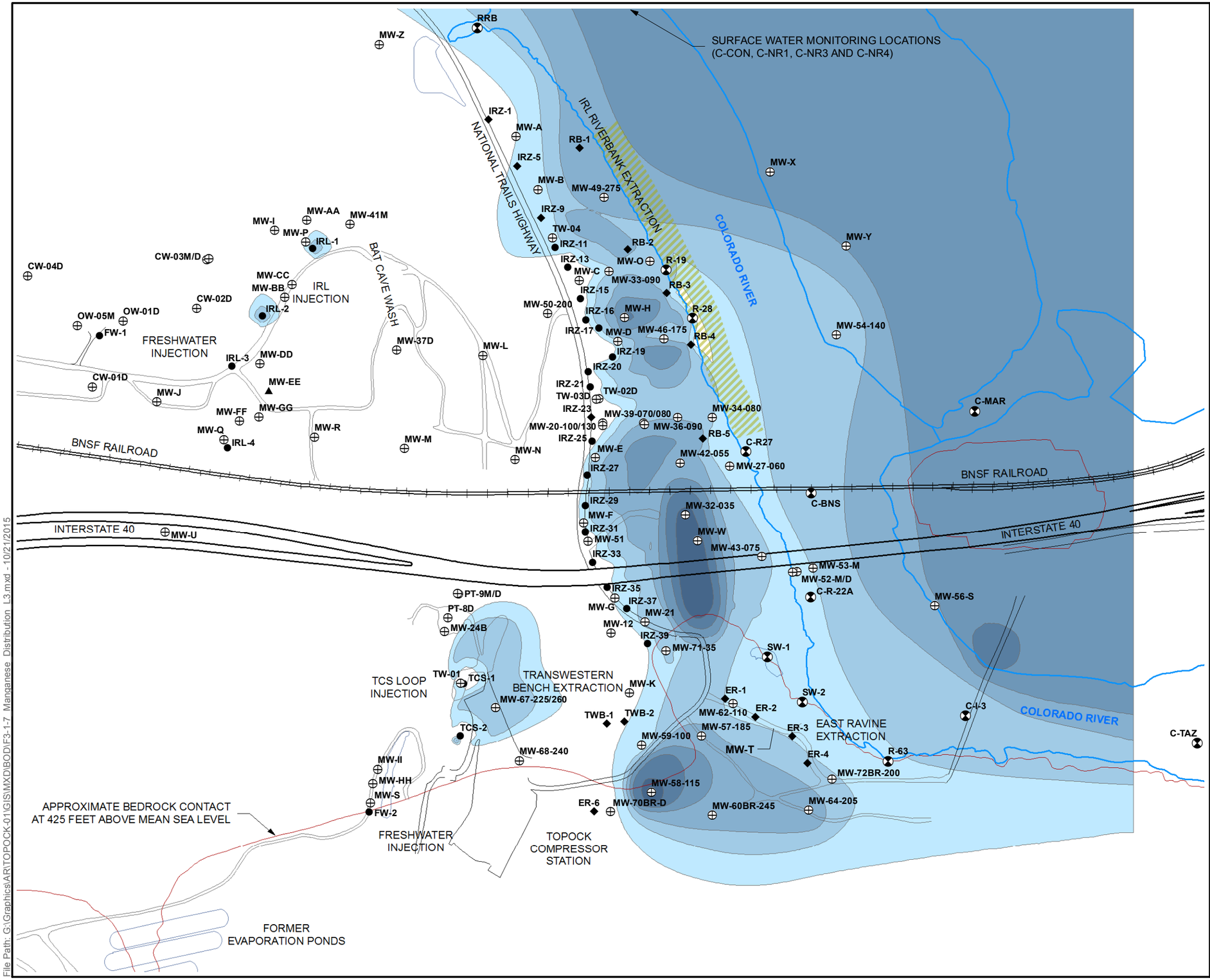

LEGEND

- MONITORING WELL
- FUTURE PROVISIONAL MONITORING WELL
- SURFACE WATER SAMPLE LOCATION
- REMEDIATION WELL (INJECTION)
- REMEDIATION WELL (EXTRACTION)
- AREA FOR POTENTIAL SLANT WELL SCREENS

MANGANESE CONCENTRATION (ppm)

- 0.13 - 0.25
- 0.25 - 0.50
- 0.50 - 0.75
- 0.75 - 1.00
- 1.00 - 2.00
- >2.00

ABBREVIATIONS

TCS TOPOCK COMPRESSOR STATION
IRL INNER RECIRCULATION LOOP

0 500 1,000 1,500
1 " = 500 '

PACIFIC GAS AND ELECTRIC COMPANY
NEEDLES, CALIFORNIA
OPERATION AND MAINTENANCE MANUAL
VOLUME 2: SAMPLING AND ANALYSIS PLAN

MONITORING NETWORK AND 30-YEAR MANGANESE DISTRIBUTION LAYER 3

ARCADIS Design & Consultancy for natural and built assets

FIGURE
3.1-7

File Path: G:\Graphics\ARITOPOCK.01\GIS\MXD\BODIF3.1-7 Manganese Distribution L3.mxd - 10/21/2015

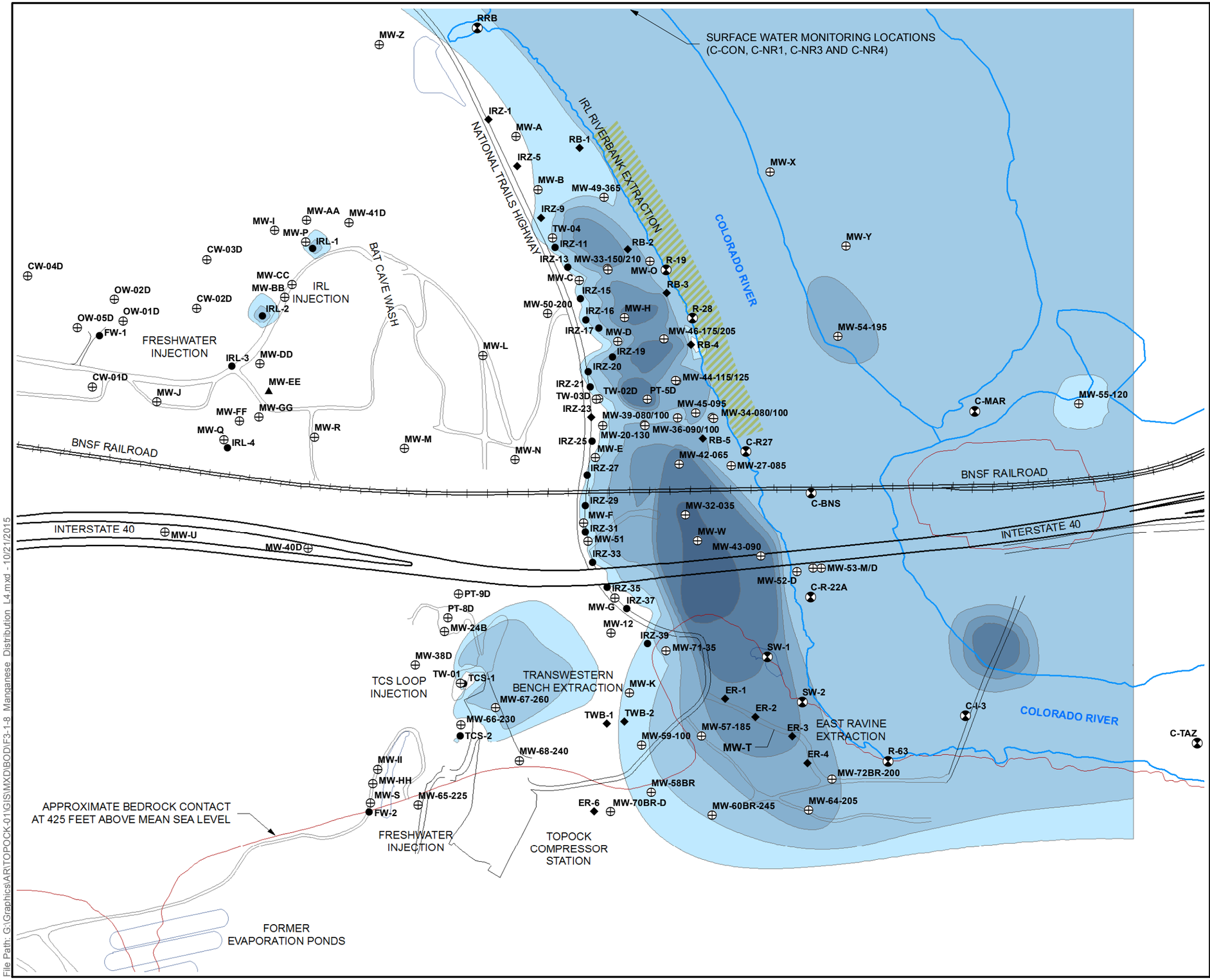

LEGEND

- MONITORING WELL
- FUTURE PROVISIONAL MONITORING WELL
- SURFACE WATER SAMPLE LOCATION
- REMEDIATION WELL (INJECTION)
- REMEDIATION WELL (EXTRACTION)
- AREA FOR POTENTIAL SLANT WELL SCREENS

MANGANESE CONCENTRATION (ppm)

- 0.13 - 0.25
- 0.25 - 0.50
- 0.50 - 0.75
- 0.75 - 1.00
- 1.00 - 2.00
- >2.00

ABBREVIATIONS

TCS TOPOCK COMPRESSOR STATION
IRL INNER RECIRCULATION LOOP

N

0 500 1,000 1,500

1 " = 500 '

PACIFIC GAS AND ELECTRIC COMPANY
NEEDLES, CALIFORNIA
OPERATION AND MAINTENANCE MANUAL
VOLUME 2: SAMPLING AND ANALYSIS PLAN

MONITORING NETWORK AND 30-YEAR MANGANESE DISTRIBUTION LAYER 4

ARCADIS Design & Consultancy for natural and built assets

FIGURE
3.1-8

File Path: G:\Graphics\AR\TOPOCK-01\GIS\MXD\BODVF3.1-8_Manganese_Distribution_L4.mxd - 10/21/2015

SURFACE WATER MONITORING LOCATIONS
(C-CON, C-NR1, C-NR3 AND C-NR4)

RRB
MW-Z
IRZ-1
MW-35-060
MW-A
RB-1
IRZ-5
MW-B
MW-49-135
MW-29
IRZ-9
MW-47-055
IRZ-11
RB-2
IRZ-13
MW-O
R-19
MW-C
MW-33-040
RB-3
IRZ-15
MW-50-095
IRZ-16
R-28
MW-28-025
MW-19
IRZ-17
MW-H
MW-31-060
MW-D
RB-4
IRZ-19
IRZ-20
IRZ-21
TW-02S
PT-5S
IRZ-23
MW-39-040
MW-36-020/040
MW-20-070
MW-30-030/050
RB-5
IRZ-25
MW-E
C-R27
MW-42-030
MW-27-020
IRZ-27
IRZ-29
MW-F
MW-32-020
IRZ-31
MW-26
MW-W
IRZ-33
MW-43-025
MW-53-S
C-R-22A
IRZ-35
IRZ-37
MW-G
MW-21
MW-12
IRZ-39
MW-71-35
SW-1
MW-23-060/080
ER-1
SW-2
ER-2
MW-62-065
MW-63-065
ER-3
MW-57-050/070/185
MW-59-100
MW-T
ER-4
R-63
MW-61-110
MW-72-080
MW-73-080
MW-58-065
MW-70-105
MW-70BR-D
ER-6
MW-60-125
MW-64-150
MW-74-240
MW-X
MW-Y
C-MAR
MW-55-045
C-BNS
C-I-3
C-TAZ
MW-AA
MW-41S
MW-I
MW-P
IRL-1
CW-04M
MW-CC
MW-BB
IRL
INJECTION
OW-02S
CW-02M
IRL-2
MW-13
OW-05S
OW-01S
FW-1
FRESHWATER
INJECTION
MW-37S
MW-L
IRL-3
MW-DD
CW-01M
MW-14
MW-EE
MW-J
MW-FF
MW-GG
MW-Q
IRL-4
MW-R
MW-M
MW-25
MW-N
MW-15
MW-II
MW-09
MW-HH
MW-S
FW-2
MW-65-160
APPROXIMATE BEDROCK CONTACT
AT 425 FEET ABOVE MEAN SEA LEVEL
FRESHWATER
INJECTION
MW-69-195
TOPOCK
COMPRESSOR
STATION
MW-11
PT-9S
MW-38S
TW-01
TCS-1
TCS LOOP
INJECTION
MW-10
MW-66-165
TCS-2
MW-67-185
MW-68-180
TWB-1
TWB-2
TRANSWESTERN
BENCH EXTRACTION
MW-K
FORMER
EVAPORATION PONDS
MW-U
MW-40S
INTERSTATE 40
INTERSTATE 40
BNSF RAILROAD
BNSF RAILROAD
NATIONAL TRAILS HIGHWAY
IRL RIVERBANK EXTRACTION
COLORADO RIVER
COLORADO RIVER
BAT CAVE WASH
EAST RAVINE
EXTRACTION

LEGEND

- MONITORING WELL
- FUTURE PROVISIONAL MONITORING WELL
- SURFACE WATER SAMPLE LOCATION
- REMEDIATION WELL (INJECTION)
- REMEDIATION WELL (EXTRACTION)
- AREA FOR POTENTIAL SLANT WELL SCREENS

ARSENIC CONCENTRATION (ppb)

- 5 - 10
- 10 - 12
- 12 - 15

ABBREVIATIONS

TCS TOPOCK COMPRESSOR STATION
IRL INNER RECIRCULATION LOOP

N

0 500 1,000 1,500
1 " = 500 '

PACIFIC GAS AND ELECTRIC COMPANY
NEEDLES, CALIFORNIA
OPERATION AND MAINTENANCE MANUAL
VOLUME 2: SAMPLING AND ANALYSIS PLAN

MONITORING NETWORK AND 30-YEAR ARSENIC DISTRIBUTION LAYER 1

ARCADIS Design & Consultancy for natural and built assets

FIGURE
3.1-9

File Path: G:\Graphics\AR\TOPOCK-01\GIS\MXD\BOD\F3.1-9_Arsenic_Distribution_L1.mxd - 10/21/2015

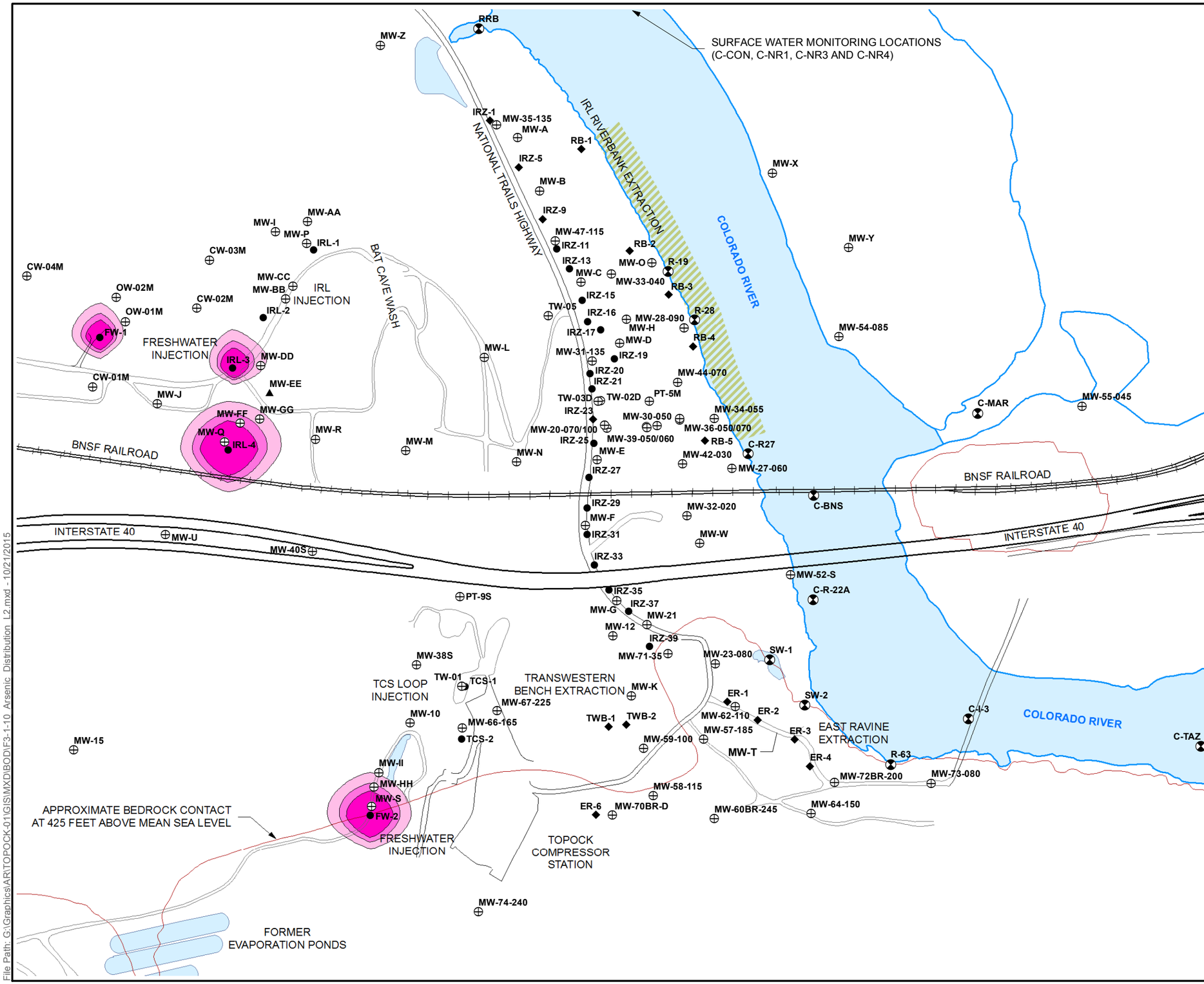

LEGEND

- MONITORING WELL
- FUTURE PROVISIONAL MONITORING WELL
- SURFACE WATER SAMPLE LOCATION
- REMEDIATION WELL (INJECTION)
- REMEDIATION WELL (EXTRACTION)
- AREA FOR POTENTIAL SLANT WELL SCREENS

ARSENIC CONCENTRATION (ppb)

- 5 - 10
- 10 - 12
- 12 - 15

ABBREVIATIONS

TCS TOPOCK COMPRESSOR STATION
IRL INNER RECIRCULATION LOOP

N

0 500 1,000 1,500

1 " = 500 '

PACIFIC GAS AND ELECTRIC COMPANY
NEEDLES, CALIFORNIA
OPERATION AND MAINTENANCE MANUAL
VOLUME 2: SAMPLING AND ANALYSIS PLAN

MONITORING NETWORK AND 30-YEAR ARSENIC DISTRIBUTION LAYER 2

ARCADIS Design & Consultancy for natural and built assets

FIGURE
3.1-10

File Path: G:\Graphics\AR\TOPOCK-01\GIS\MXD\BOD\F3-1-10_Arsenic_Distribution_L2.mxd - 10/21/2015

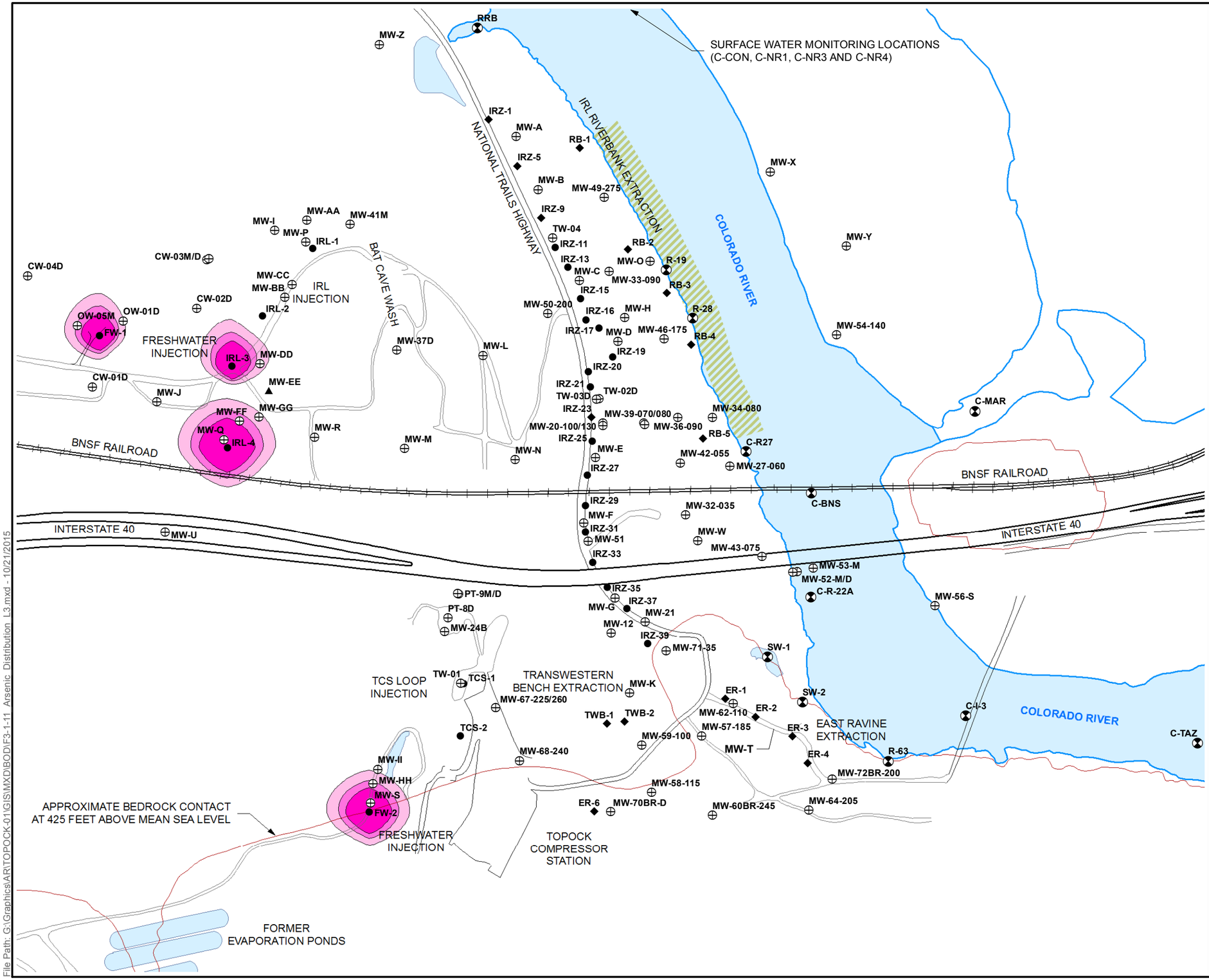

LEGEND

- ⊕ MONITORING WELL
- ▲ FUTURE PROVISIONAL MONITORING WELL
- ⊠ SURFACE WATER SAMPLE LOCATION
- ● REMEDIATION WELL (INJECTION)
- ◆ REMEDIATION WELL (EXTRACTION)
- AREA FOR POTENTIAL SLANT WELL SCREENS

ARSENIC CONCENTRATION (ppb)

- 5 - 10
- 10 - 12
- 12 - 15

ABBREVIATIONS

TCS TOPOCK COMPRESSOR STATION
IRL INNER RECIRCULATION LOOP

N

0 500 1,000 1,500

1 " = 500 '

PACIFIC GAS AND ELECTRIC COMPANY
NEEDLES, CALIFORNIA
OPERATION AND MAINTENANCE MANUAL
VOLUME 2: SAMPLING AND ANALYSIS PLAN

MONITORING NETWORK AND 30-YEAR ARSENIC DISTRIBUTION LAYER 3

ARCADIS Design & Consultancy for natural and built assets

FIGURE
3.1-11

File Path: G:\Graphics\AR\TOPOCK-01\GIS\MXD\BOD\F3.1-11 Arsenic Distribution L3.mxd - 10/21/2015

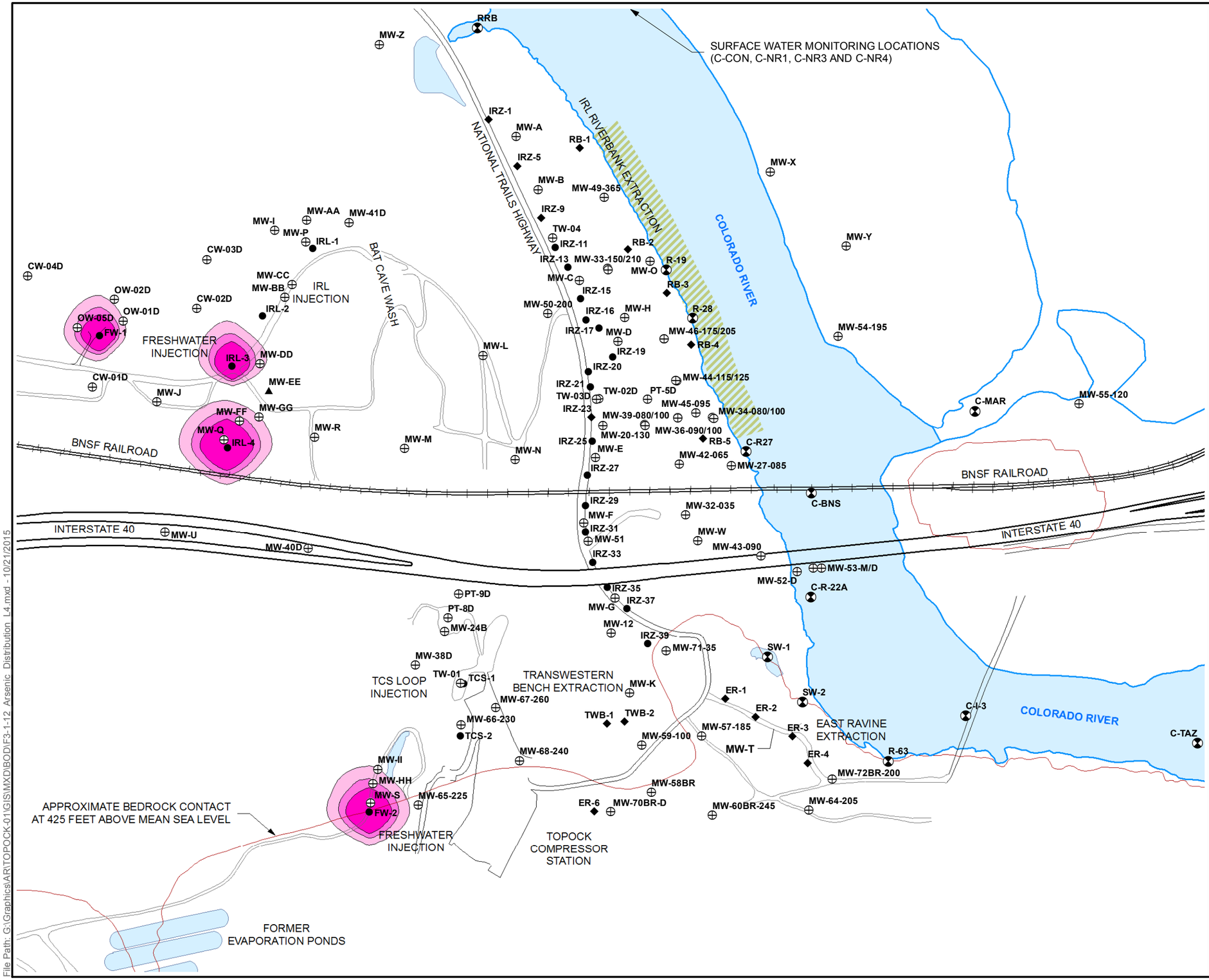

LEGEND

- MONITORING WELL
- FUTURE PROVISIONAL MONITORING WELL
- SURFACE WATER SAMPLE LOCATION
- REMEDIATION WELL (INJECTION)
- REMEDIATION WELL (EXTRACTION)
- AREA FOR POTENTIAL SLANT WELL SCREENS

ARSENIC CONCENTRATION (ppb)

- 5 - 10
- 10 - 12
- 12 - 15

ABBREVIATIONS

TCS TOPOCK COMPRESSOR STATION
IRL INNER RECIRCULATION LOOP

N

0 500 1,000 1,500

1 " = 500 '

PACIFIC GAS AND ELECTRIC COMPANY
NEEDLES, CALIFORNIA
OPERATION AND MAINTENANCE MANUAL
VOLUME 2: SAMPLING AND ANALYSIS PLAN

MONITORING NETWORK AND 30-YEAR ARSENIC DISTRIBUTION LAYER 4

ARCADIS Design & Consultancy for natural and built assets

FIGURE
3.1-12

File Path: G:\Graphics\AR\TOPOCK-01\GIS\MXD\BOD\F3.1-12 Arsenic Distribution L4.mxd - 10/21/2015

SECTION 4

In-Situ Remediation Performance Monitoring

Process control monitoring will involve sampling of groundwater and surface water to verify that the different components of the remedy are functioning as anticipated and to guide adaptive operations. The following sections describe the locations and functions of different monitoring wells, the construction of new monitoring wells, analytes to be monitored and their collection frequencies, and anticipated concentration changes and timeframes.

4.1 Anticipated Concentration Ranges and Timeframes

To guide the operations of the remedy, this section will establish the anticipated timeframes over which changes in concentrations of Cr(VI), by-products, and other water quality parameters is expected to occur. These expectations are based on solute transport modeling completed in support of the design, as summarized in Appendix B of the Final BOD. The anticipated concentrations and timeframes are based on nominal baseline values and current solute transport model predictions. These estimates will be updated as the system is installed and as baseline sampling is conducted. The estimates will also be adjusted during remedy implementation as data are collected during operations and the solute transport model is refined. Model updates are planned to be conducted approximately annually during start-up and during five-year reviews thereafter. The timeframes set forth will be also used to evaluate progress toward achieving RAO 3 regarding reduction of Cr(VI) and Cr(T) mass in groundwater, in accordance with compliance DQO-2. The anticipated concentrations and timeframes will also serve as triggers for implementing adaptive operations as laid out in the decision rules/operational flowcharts in Section 2.2.

Table 2.2-1 summarizes the anticipated timeframes for the arrival of the treated groundwater for various components of the Process Control Monitoring Program. These estimates were based on the solute transport modeling and provide part of the basis for the sampling frequencies of the Process Control Monitoring Program.

For the IRZ portions of the remedy, Table 2.2-1 also summarizes the predicted concentration ranges and timeframes for TOC that will be distributed by in-situ injections and for by-products (arsenic, iron, and manganese) that will be generated by in-situ treatment. Note, barium concentrations are not predicted and are not anticipated to be significant unless strong sulfate reducing conditions develop.

In addition to anticipated concentration ranges for by-products, Table 2.2-1 also lists maximum concentrations in parentheses for manganese, iron, and arsenic. The purpose of these thresholds is to provide flexibility for individual wells that may exhibit behavior deviating from the average. Although it is expected that the majority of the wells will exhibit by-product concentrations within the anticipated ranges, it is possible that any given well may exhibit deviations outside of those ranges based on spatial variability in the hydraulic and geochemical characteristics of the aquifer that may cause locally high by-product concentrations. If a relatively small number of monitoring wells fall above the anticipated range but below the maximum, operational adjustments may not be necessary as long as the majority of the wells still fall within the anticipated range.

TOC

TOC will be analyzed to evaluate the distribution of organic carbon substrate in the subsurface within the IRZs. For dose response wells located at the midpoint between injection locations along the NTH IRZ, TOC concentrations of 15 to 50 milligrams per liter (mg/L) are targeted. For monitoring wells located closer to injection points within the NTH IRZ, IRL injection area, and TCS injection area, higher concentrations are anticipated and may exceed the average target injection concentrations depending on how continuously the substrate is applied. TOC arrival, and Cr(VI) removal, are anticipated to be observed in dose response wells generally within the first six months of operation.

Arsenic

Baseline concentrations and anticipated concentration ranges for arsenic are given in Table 2.2-1. The anticipated ranges are based on a combination of generalized baseline concentrations and solute transport model predictions. The simulated arsenic concentrations considered in this analysis for the IRZs are a function of by-product generation from carbon injections into the IRZs and are independent from arsenic concentrations associated with the freshwater source (HNWR-1A) that will be injected into the upland injection wells receiving fresh water. Solute transport model results used in determining anticipated concentration ranges included the base-case parameter model run (i.e., all parameters for sorption, precipitation, and generation are set at their nominal values) and one sensitivity model run testing an increased arsenic generation rate (Appendix B of the Final BOD). Some wells exhibit baseline concentrations above these ranges and are anticipated to remain above the anticipated ranges during remedy implementation.

At freshwater injection locations—assumed to include FW-1, FW-2, IRL-3, and IRL-4 for the nominal design scenario—levels of naturally occurring arsenic in the freshwater source were also considered and simulated. The modeling results indicate that arsenic levels from freshwater injection generally remain at concentrations less than the injected concentration beyond 150 feet from injection locations (Figures 3.1-9 through 3.1-12). Model results indicate arrival of arsenic at concentrations at the injected concentration at some 150-foot monitoring locations toward the end of the modeled timeframe. For comparison against baseline data and model predictions, concentration maps for arsenic will be prepared periodically using color dots or concentration shading to illustrate the distribution of this by-product in groundwater.

NTH IRZ monitoring wells. Although arsenic concentrations are expected to increase due to IRZ operations, arsenic is expected to attenuate rapidly outside of the IRZ footprint. In NTH IRZ dose response wells, concentrations are expected to be between 2 and 10 μg/L, with a maximum of 15 μg/L. This concentration range accounts for background values in the 2 to 5 μg/L range, combined with maximum modeled arsenic concentrations between 5 and 10 μg/L in the immediate vicinity of injection wells (based on the base-case modeling runs, as well as the increased-generation sensitivity runs presented in Appendix B of the Final BOD). Downgradient of the IRZ, by-product arsenic concentrations are not expected to exceed 5 μg/L; however, baseline concentrations are higher in some locations due to the naturally reducing conditions within the floodplain. A similar anticipated concentration range of 2 to 10 μg/L is expected for most wells, based on observed baseline concentrations and uncertainty in how those baseline concentrations may change as Interim Measure No. 3 pumping is switched off and the flow regime changes. Timing of by-product arrival in dose response wells is expected to roughly coincide with TOC arrival (generally within the first six months of operation).

The anticipated concentration range is lower in river bank extraction monitoring wells (2 to 5 μg/L for most wells, with a maximum of 8 μg/L), since no by-product arsenic is expected to reach these wells, and since baseline concentrations are generally lower than in the mid-floodplain.

TCS injection monitoring wells. Since similar TOC concentrations will be used in the NTH IRZ and TCS Recirculation Loop injections, a similar concentration range for arsenic of 1 to 10 μg/L is expected in the TCS Recirculation Loop dose response wells, while arsenic is not expected to increase significantly above baseline in downgradient monitoring wells (MW-67 cluster; Table 2.2-1).

Iron and Manganese

Anticipated concentration ranges for iron and manganese are based on a combination of generalized baseline values and by-product concentration predictions determined from solute transport modeling. Solute transport model results used in determining anticipated concentration ranges included the base-case parameter model run and parameter sensitivity analysis runs, including a run with an increased manganese generation rate and a run considering TOC injection in the IRL, as described in Appendix B of the Final BOD. Solute transport modeling for iron was not conducted. It is therefore assumed that iron will follow concentration trends similar to manganese, which is a conservative assumption given that iron typically attenuates more quickly than manganese downgradient of an IRZ. For comparison against baseline data and model predictions, concentration maps for iron

and manganese will be prepared periodically using color dots or concentration shading to illustrate the distribution of this by-product in groundwater.

Dose response wells. Based on the solute transport modeling results, including the base-case parameter run (Figures 3.1-5 through 3.1-8) and the increased-generation parameter sensitivity run (Appendix B of the Final BOD), IRZ dose response wells are expected to see a range in dissolved manganese concentrations between 1 and 2.5 mg/L, with an maximum concentration of 5 mg/L. As described above, this maximum value reflects potential spatial variability in hydraulic properties and solid phase manganese distributions within the aquifer. Such variability may cause manganese concentrations in any given well to increase above the anticipated range, even though on average the majority of the wells are expected to lie within the anticipated range. Arrival of TOC and by-products and the treatment of Cr(VI) at these dose response wells is expected within the first six months of operation.

Downgradient and river bank extraction monitoring wells. Monitoring wells downgradient of the NTH IRZ are expected to see a similar range in manganese concentrations, based on baseline and modeled by-product concentrations (base-case and increased manganese generation runs). Manganese and iron concentrations in the vicinity of the IRL Injection Wells will depend strongly on the concentration and duration of TOC dosing. A solute transport model parameter sensitivity run was conducted that included phased TOC injection into the IRL (Appendix B of the Final BOD). Based on this run, manganese concentrations in dose response wells (MW-P, MW-Q, MW-14) are expected within 1 to 2.5 mg/L (maximum of 5 mg/L).

4.2 Sampling Locations, Analytes and Frequencies

Analytes and monitoring frequencies are outlined below according to location and category within the Process Control Monitoring Program. The sampling program presented is an initial program optimized for the process control DQOs detailed in Section 2.2. As data are collected during remedy installation and initial operations, the CSM will be updated. The monitoring program may be refined based on baseline data prior to remedy operation, and the sampling program will be revisited and refined after the first two years of operation.

All sampling events, regardless of the analytes being sampled, will also include collection of field parameters (pH, DO, ORP, temperature, and specific conductance). Field sampling will follow the protocols outlined in Section 7 of this manual. Regardless of sampling frequency specified in the Process Control Monitoring Program, baseline data will be collected from all monitoring wells in the program for the full suite of analytes listed in Table 4.2-1 where these data do not already exist or have not been collected within the past two years.

4.2.1 IRZ, IRL, and TCS Dose Response Monitoring Wells

Wells that will receive organic carbon injections as part of the IRZ remedy will include NTH IRZ Injection Wells (Figure 2.2-1), TCS Injection Wells (TCS-1 and -2), and potentially the IRL Injection Wells (IRL-1 through -4). Dose response monitoring wells are identified (Table 2.1-2) within the immediate vicinity of these IRZ injection wells, within the anticipated IRZ footprint. The dose response wells are used to verify that the NTH IRZ is completely established and that Cr(VI) treatment is initiated and maintained over time.

To establish the NTH IRZ, the organic carbon substrate will be distributed laterally from the injection points. Monitoring wells located in between the injection points will be used to assess the completeness of the organic carbon distribution and/or establishment of Cr(VI) reducing conditions. It will be the most difficult to establish the IRZ at locations roughly halfway between the injection points given that these locations are the farthest from the injection points. As such, additional monitoring locations (MW-C, -D, -E, -F, and –G) are proposed in the spaces between approximately every other pair of injection wells. The placement in every other space allows for data collection along the full extent of the IRZ, providing a balance in data density appropriate for evaluating the effect of potentially varying hydrogeological environments while minimizing the total number of locations required (i.e., the number of boreholes would be roughly doubled if a monitoring well was placed between every space). In addition, many pre-existing monitoring wells in the near vicinity of injection wells (within approximately 60 feet) will be used to provide additional data on TOC distribution, Cr(VI) treatment, and by-product generation closer to the injection points where reducing conditions are expected to be stronger and develop faster.

For the IRL Injection Wells, organic carbon will be amended if Cr(VI) concentrations in the injection water are above 32 μg/L. New monitoring wells (MW-P and MW-Q) will be installed within 50 to 100 feet of the injection wells to monitor water levels, TOC distribution, and by-product generation within the injection zone, and to verify the treatment of Cr(VI). MW-14 located further downgradient of IRL-3 may also be used to monitor dose response, if IRL-3 injections are amended with carbon.

For the TCS IRZ, pre-existing monitoring wells located less than 100 feet from injection wells TCS-1 and -2 will function as dose response wells.

IRZ dose response wells will be monitored for the following constituents:

- **TOC, Cr(VI), and dissolved iron:** These three parameters are critical for monitoring the establishment of the IRZ at the dose response wells. TOC will be sampled to evaluate and verify distribution of organic carbon substrate in subsurface, Cr(VI) will be sampled to evaluate reduction of Cr(VI), and dissolved iron will be sampled to evaluate the generation of the Cr(VI) reductant ferrous iron through the stimulation of iron reduction. As discussed in Section 4.1, the changes at the dose response wells are anticipated to happen within the first six months of operation. As such, at the NTH IRZ, where IRZ establishment and maintenance is most critical (see NTH IRZ DQO-2), dose response well monitoring will be conducted monthly for the first year, which is planned to include a six-month period of operation followed by a six-month period of shutdown. If results are within expectations, the sampling frequency may be reduced to quarterly thereafter. For the TCS Recirculation Loop and the IRL, the dose response well monitoring frequency will be quarterly, less than for the NTH IRZ given the less critical nature of establishing a complete IRZ in these areas. Given the timeframes required for the establishment of microbial communities and the transport of injection reagents and by-products from the injection wells to the dose response wells, monitoring more frequently than monthly at the dose response wells will likely not be necessary. However, more frequent sampling may be considered within the first year if it is deemed valuable based on the initial results obtained at dose response wells.
- **Cr(T):** This parameter will be sampled to verify that chromium is precipitating out of groundwater following reduction. Results to date have not indicated any issues with precipitation of Cr(III) formed by reduction, and as such the Cr(T) sampling frequency is less than the Cr(VI) sampling frequency (i.e., quarterly for the first year, followed by semi-annually for the IRZ dose response wells).
- **In-situ by-products (arsenic, manganese, iron, barium):** These parameters will also be monitored at the dose response wells to evaluate by-product generation and to refine the estimates used to predict by-product generation in the solute transport model (see Appendix B of the Final BOD). By-products are also an indication of the establishment of reducing conditions. Sampling for by-products will be conducted at the same frequency as sampling for TOC and Cr(VI). As noted above, sampling more frequently than monthly during startup will likely not be useful given transport timeframes, but may be considered if deemed valuable based on the results obtained.
- **Nitrate:** The removal of nitrate from solution is a primary indicator of the establishment of reducing conditions that are sufficient for the reduction of Cr(VI). Nitrate is a good indicator of the arrival of treated water and may provide information on whether the hydraulics of injection versus the amount of organic carbon delivered is controlling treatment effectiveness. In general, nitrate will be sampled at the same frequency as TOC and Cr(VI) in the IRZ dose response wells.
- **Sulfate:** Sulfate will be monitored at the same frequency as TOC, Cr(VI), and in-situ by-products in the NTH IRZ dose response wells to ensure that the reducing environment is such that excessive sulfate reduction and release of barium does not occur.
- **General water quality parameters:** Cations and anions may be useful to evaluate the potential for mineral deposit formation and may serve as tracers of injected solution. Alkalinity may be measured to monitor changes due to microbial activity and the potential for mineral deposits formation, i.e. as carbonate minerals. Total dissolved solids (TDS) may be measured as an additional water quality indicator for evaluation of

changes in water chemistry. These parameters may be used to answer specific questions that arise, but will not be monitored on a routine basis at dose response wells to ensure the effectiveness of the IRZs.

- **Other nitrogen compounds:** In addition, nitrite and ammonium (potential by-products of incomplete nitrate reduction and ammonification, respectively) will also be sampled at dose response wells where reactions producing these analytes could potentially occur. If no ammonium or nitrite is detected within the first year of monitoring, sampling for these analytes will be discontinued. If increases in ammonium or nitrite concentrations are detected in dose response wells, recommendations for continued sampling and potential expansion of the monitoring network for these analytes will be provided.

4.2.2 IRZ, IRL, and TCS Downgradient Monitoring Wells

For the NTH IRZ, downgradient monitoring wells (Figure 2.2-1; Table 2.1-2) will be on the edge or outside of the anticipated TOC footprint to observe downgradient Cr(VI) and by-product concentration trends. Downgradient of the NTH IRZ line, downgradient monitoring wells are located midway between the NTH and the river bank, running roughly along a north-south transect. Existing monitoring wells will provide adequate downgradient coverage, with the exception of: the region between IRZ-17 and extraction well RB-3 where well MW-H is being proposed; and the area west of the southern portion of the IRZ line where MW-W is being proposed.

For the IRL IRZ, downgradient monitoring wells will be located within 300 to 900 feet downgradient of the IRL Injection Wells. This will include existing well clusters between IRL-1 through -4 and the NTH IRZ line and proposed monitoring wells (MW-R and MW-M) to obtain better downgradient coverage to the southeast, if needed to monitor carbon injections at IRL-4. MW-I and MW-J are being proposed as by-product monitoring wells for the IRL injections. These locations were selected because they were the optimal locations that were located more than 200 feet from injection points upgradient of IRL-1 and IRL-4 on the ends of the IRL injection line. Other locations considered within varying distances and directions from IRL-1 and IRL-4 were not as optimal based on topographic, access, and cultural considerations. Existing well clusters (CW-02 and CW-03) will also serve as by-product monitoring wells upgradient of the IRL injection points to monitor for Cr(VI) and potential injection by-products.

For the TCS IRZ, the pre-existing well cluster MW-67 will be used to monitor downgradient of the TCS injection zone. Because of the location of the injection wells within the interior of the plume upgradient of the extraction zones, more extensive downgradient monitoring will not be necessary.

Downgradient monitoring wells will be monitored for the following constituents:

- **Cr(VI), nitrate, and Cr(T):** These constituents will be sampled to evaluate the arrival of treated water. The frequency of sampling varies depending on the anticipated arrival of treated water at downgradient wells in the different systems. These wells double as inner compliance monitoring wells, and the anticipated arrival times are summarized in Table 2.1-4 and 2.1-5. Cr(T) will be sampled on a less frequent basis at the downgradient monitoring wells, similar to at the dose response wells.
- **TOC:** This will be sampled to verify the downgradient edge of TOC distribution (NTH IRZ and TCS Recirculation Loop downgradient wells only). Sampling frequency will be the same as for Cr(VI) and nitrate.
- **In-situ by-products:** These constituents will be sampled to evaluate the downgradient migration of by-products generated by the IRZ. Sampling frequency will be the same as for Cr(VI) and nitrate.
- **Sulfate and general water quality parameters:** As for the dose response wells, sulfate and general water quality parameters will be sampled on an as-needed frequency to answer specific questions as they arise.

4.2.3 River Bank Extraction and Northern NTH Extraction Monitoring Wells

The NTH IRZ downgradient monitoring wells (Figure 2.2-1; Table 2.1-2) will also serve as river bank extraction monitoring wells, along with additional proposed and pre-existing wells closer to the river bank. The goal of these wells will be to monitor water levels and water quality specifically as it relates to water that will be extracted by the River Bank Extraction Wells or potentially discharged to the river. As such, the river bank extraction

monitoring program includes newly installed wells and one proposed well located in between River Bank Extraction Wells (MW-O), as well as surface water sampling points to monitor the effects of groundwater discharge on river water quality. Monitoring wells on the Arizona side of the river (existing well clusters MW-54, MW-55, and MW-56, and proposed wells MW-X and MW-Y) will also be included in the river bank extraction monitoring well network. These will serve as sentinel wells to assess the potential for Cr(VI) and by-product concentrations to increase above baseline in this area.

In response to agency comments on the monitoring well network proposed in the 60% design, future provisional locations for angled (i.e., slant) well construction on the California bank of the Colorado River have also been added. As discussed with the agencies during development of the Final BOD (See Section 3.6 of the Final BOD), elevated detections of Cr(VI) in monitoring wells MW-X and MW-Y, which will be constructed on the Arizona side of the river, would trigger a discussion as to whether the slant well(s) should be constructed.

River bank extraction monitoring wells will be monitored for the same constituents as the IRZ downgradient monitoring wells and at a similar frequency. In addition to evaluating the arrival of treated groundwater and by-products, the data from these locations will be used to evaluate hydraulic control and the condition of the reducing rind, as described in IRL DQO-5.

Monitoring wells, including the MW-35 cluster and proposed wells MW-A and MW-B, will be located on the northern end of the NTH IRZ network in the vicinity of extraction wells IRZ-1, -5, and -9. Monitoring in this area, which will focus on Cr(VI) and water levels, will be used to assess hydraulic control of the Cr(VI) plume on the northern end of the NTH IRZ and will be conducted on a monthly basis for the first quarter of operation, as the new hydraulic regime is established, and quarterly thereafter.

4.2.4 Transwestern Bench and East Ravine Extraction Monitoring Wells

As part of the TCS Recirculation Loop, water containing elevated Cr(VI) will be extracted from the Transwestern Bench and East Ravine areas. The monitoring network (Figure 2.2-1; Table 2.1-2) will primarily include pre-existing wells surrounding the extraction wells on all sides within approximately 500 feet. MW-K is proposed to enhance monitoring coverage to the east of the Transwestern Bench extraction. A piezometer (MW-T) will be located along the line of East Ravine Extraction Wells.

Wells will be sampled on a quarterly basis for Cr(VI) and on a semi-annual basis for Cr(T). More distant wells will also be monitored, including MW-73-080, which has shown elevated Cr(VI) concentrations, and the Arizona wells, but at a lower frequency.

4.2.5 Extraction Wells

In addition to the monitoring wells, the remedy extraction wells in the NTH IRZ, IRL, and TCS Recirculation Loop will also be sampled as a part of the process control monitoring. Individual extraction wells will be sampled, as well as the combined stream of extracted groundwater. In addition to monitoring for water quality parameters, water level measurements will be collected with a probe in two locations: within the well via a stilling tube and within the filter pack via a piezometer.

Samples collected from the extraction wells and combined extracted groundwater streams will be analyzed for Cr(VI). The data will be used to evaluate hydraulic control of the plume (Section 4.3) and to determine if treatment is required prior to re-injection in the IRL (Section 2.2.2).

Because several of the NTH IRZ Extraction Wells are located close to the injection wells, the extraction wells will be sampled for dissolved and total iron and manganese and TOC which may be extracted from nearby injection locations and which may cause fouling. Oxidation of dissolved iron and/or manganese may form mineral deposits and cause fouling of pipelines and injection wells. Excess TOC can cause biological growth in pipelines and extraction wells, causing fouling.

Additional water quality parameters can be used to evaluate the potential for precipitate formation that could lead to fouling and will be evaluated if needed for troubleshooting.

4.2.6 Combined Extraction Streams and Freshwater Source

Samples for IRL DQO-5 will be collected from the sampling port located in the River Bank Extraction Well network header where it enters the IRZ Carbon Amendment Building, upstream of the static mixer, as shown on Exhibit 2.2-1. Samples for Freshwater DQO-3 will be collected from the freshwater source prior to the injection location. The monitoring program will include a wide range of constituents, both organic and inorganic, that have never been tracked at the Topock site but could be undesirable if present in the injected water. Inorganics will include metals, common anions and cations, total dissolved and suspended solids, stable isotopes of oxygen and hydrogen, et cetera. These analyses provide a means for tracking overall changes in injected water quality with time. Samples will be analyzed for the constituents listed in Table 5.2-4 in Section 5.

Because of the lack of nearby sources, the likelihood of organic contaminants being present in the freshwater source or extracted river bank water is small; therefore, the frequency of analysis for organics and pesticides will be lower than for metals and common ions. Monitoring frequency for the inorganic suite will be monthly for the first six months and quarterly for the remainder of the first year of operation, assuming the water quality is generally stable at that time (if the water quality appears to be changing rapidly, monthly sampling would be continued beyond the first 6 months). Following the first year, monitoring frequency will switch to semi-annual. Monitoring frequency for the organic analytical suite will be annual for the first two years, switching to every other year in subsequent years.

4.2.7 Freshwater Arsenic Monitoring Wells

Freshwater arsenic monitoring wells (Table 2.1-2) are proposed at locations as shown on Figure 2.2-1. Per the State Board letter, these wells are located at 150 and 225 feet, with a few exceptions based on DTSC direction related to accessibility, constructability, and cultural considerations. Existing monitoring wells were utilized, where possible. New monitoring wells are proposed where existing monitoring wells did not exist at the requisite distances from the injection well.

The locations for freshwater arsenic monitoring per the State Board letter requirements are as follows:

- New well location MW-AA will serve as the 150-foot monitoring location for IRL-1.
- Existing well cluster MW-41S/M/D will be used for the 225-foot monitoring location for IRL-1.
- New well location MW-BB will serve as the 150-foot monitoring location for IRL-2. MW-BB was previously presented, in the 90% BOD (CH2M HILL 2014b), as a specific location north of the dirt access road (approximately 90 feet from IRL-2). Subsequent to submittal of the 90% BOD, as presented in the Supplemental 90% submittal (CH2M HILL 2015a), MW-BB was moved to its current location (i.e., onto the access road at the appropriate distance from IRL-2) based on input from the Tribes and agencies, as well as general design concurrence from Southwest Gas. Southwest Gas reserves final concurrence pending the review of final construction plans and their direct observations in the field during construction.
- New well location MW-CC will serve as the 225-foot monitoring location for IRL-2. The location of MW-CC was previously presented, in the 90% BOD, as an area south-southeast of the road. Subsequent to submittal of the 90% BOD, as presented in the Supplemental 90% submittal, the current specific location for MW-CC was selected (i.e., on the access road at the appropriate distance from IRL-2). The change was made based on input from the Tribes and agencies, as well as general design concurrence from Southwest Gas. Southwest Gas reserves final concurrence pending the review of final construction plans and their direct observations in the field during construction.
- New well location MW-DD will serve as the 150-foot monitoring location for IRL-3.
- New well location MW-EE (Figure 2.2-1) is currently under consideration to serve as the 225-foot monitoring location for IRL-3. Since submittal of the 90% BOD, as presented in the Supplemental 90% submittal, the specific location for MW-EE was moved to the south-southeast in accordance with the agencies' direction. As detailed in the December 23, 2014 direction letter (DOI and DTSC 2014), this location is estimated based on

the map presented by the Tribes during the November 18 and 19, 2014 Technical Working Group (TWG) meeting and is a placeholder location pending the review of additional data. MW-EE is a future provisional well dependent on groundwater monitoring data collected from other wells during remedy construction and operation. If MW-EE is directed for construction following the review of data and discussion between PG&E, the agencies, and the Tribes, it will be constructed at either the current location shown on Figures 2.2-1, or at an alternative location that better matches the desired outcome.

- New well locations MW-FF and MW-GG will serve as the 150- and 225-foot monitoring locations, respectively, for IRL-4.
- New well locations MW-HH and MW-II will serve as the 150- and 225-foot monitoring locations, respectively, for FW-2.

Sampling for arsenic will be conducted at these monitoring locations on a quarterly frequency, as indicated in Table 2.1-2.

4.2.8 Carbon Amendment System Sampling Locations

Samples will be collected from sampling points located throughout the carbon amendment system to evaluate its effectiveness. At the MW-20 Bench, the carbon substrate will be fed into four conveyance forcemains (one to the IRL Injection Wells, one to the northern NTH IRZ injection leg, one to the southern NTH IRZ injection leg, and one to the TCS Injection Wells), each equipped with an in-line static mixer. As shown in Exhibit 2.2-1, samples for each line will be collected from sampling ports located just downstream of each mixer (M-IRZ00-0605, M-IRZ00-0606, M-IRZ00-0607, and M-IRZ00-0608). In addition, sampling ports are available within each injection vault to sample the distribution of organic carbon to individual injection well screens (Exhibit 2.2-1), as needed.

4.2.9 Water Level Monitoring

Water levels will be measured in all monitoring wells, injection wells, and extraction wells in support of addressing the hydraulic and hydrogeologic components of remedy assessment. The measurements will be made by in-well pressure transducers and/or manual methods. The wells proposed to have in-well pressure transducers are noted on Tables 2.1-2 and 2.1-3 and selected based on their assigned function within the groundwater remedy. For these wells, water level measurements will periodically be made by manual methods in addition to continuous pressure transducer readings. The water level measurements will be converted to elevations referenced to sea level so that the water levels can be integrated site-wide for interpretation of potentiometric levels and hydraulic gradients. Corrections to the water levels necessary due to salinity and temperature effects will be made as appropriate following standard operating procedures (SOP-A22, Procedures for Calculation of Freshwater Equivalent Heads Standard Operating Procedures for PG&E Topock Program). Tables 2.1-3 and 4.2-1 indicate the frequency of water level measurements.

Monitoring at the site has shown that water levels in monitoring wells located near the Colorado River fluctuate in a sinusoidal pattern with a frequency of approximately one day. Wells located closest to the river exhibit a daily fluctuation magnitude of between 1 and 2 feet per day (compared to a daily river stage fluctuation of up to 3 feet). However, this oscillation does not prohibit assessment of longer-term trends. To do this, averaging of water levels over a selected period of time will be implemented to define a representative water level for assessments including mapping. This will be done for all data from wells located within proximity of the river that produces such effects. The use of pressure transducers in monitoring wells will facilitate the implementation of this method.

4.3 Hydraulic Control Evaluation

4.3.1 Objective and Approach

The objective of RAO 2 is to limit Cr(VI) dissolved in groundwater at the site from migrating into the Colorado River. The remedy addresses this requirement through in-situ remediation and groundwater pumping. The groundwater extraction wells are to be installed as part of the NTH IRZ (River Bank Extraction Wells) and the TCS Loop (East Ravine Extraction Wells). The hydraulic control evaluation is to assess the performance of the

groundwater extraction well element of the remedy. The approach and methodology for this assessment will be consistent with regulatory guidance prepared and distributed by the U.S. Environmental Protection Agency (USEPA), including the document *A Systematic Approach for Evaluation of Capture Zones at Pump and Treat Systems*, dated January 2008 (USEPA 2008).

The approach is considered iterative because assessments will be conducted periodically as additional data are collected as part of performance and compliance monitoring. These additional data will also be used to continually refine the CSM and to make operational improvements to the remedy. Thus, as additional data are collected at the site, additional monitoring locations and/or additional types of information will be identified to address any identified data gaps and ambiguities.

The approach includes these three basic steps consistent with the USEPA guidance:

1. Define what requires hydraulic control in conjunction with the CSM and the RAOs.
2. Interpret the actual zone of hydraulic control.
3. Demonstrate consistency between required control and the actual zone of hydraulic control.

This approach reflects the process of assessing information to determine what requires hydraulic control, analyzing performance data to determine the dimensions of the actual zone of hydraulic control created by groundwater extraction, and assessing whether the requirements are met by the created zone. The ability to perform these steps successfully depends in large part on whether the appropriate information has been collected at the site. These three steps are discussed in the following sections.

4.3.2 Definition of Hydraulic Control Requirements in Conjunction with CSM and RAOs

The current extent of Cr(VI) concentrations in groundwater that exceed 32 μg/L, the regional background concentration, is illustrated in Figure 2.1-1. The RAOs that apply to hydraulic control of Cr(VI) in groundwater are stated in Section 2.1:

> *RAO 2: Prevent or minimize migration of Cr(T) and Cr(VI) in groundwater to ensure concentrations in surface water do not exceed water quality standards that support the designated beneficial uses of the Colorado River (11 μg/L Cr[VI]).*
>
> *RAO 4: Ensure that the geographic location of the target remediation area does not permanently expand following completion of the remedial action.*

Based on RAO 2, one objective of hydraulic control of Cr(VI) in groundwater at the site is to protect the designated beneficial uses of the Colorado River. The degree to which Cr(VI) in groundwater requires containment with respect to the numeric level associated with the designated beneficial uses (11 μg/L Cr[VI]) has not been quantified. However, due to several factors, it can be assumed that the amount of mass of Cr(VI) that could migrate from groundwater into the Colorado River to result in a detectable concentration of Cr(VI) above 11 μg/L would translate to a concentration of Cr(VI) in groundwater significantly above the 11 μg/L surface water quality standard and the 32 μg/L regional background level.

Based on RAO 4, a second objective of hydraulic control of Cr(VI) in groundwater is to protect the groundwater basin as a resource. The groundwater remedy design is a combination of in-situ groundwater treatment and hydraulic control, and is intended to remediate the Cr(VI) plume through implementation of IRZs as well as the hydraulic control in specific areas. While some portions of the Cr(VI) plume (i.e., Cr[VI] concentrations exceeding 32 μg/L) will be controlled by extraction wells, the remedy is designed to treat remaining Cr(VI) greater than 32 μg/L that may not be hydraulically controlled. With this considered, and for the purpose of providing a metric for hydraulic control assessments, the Target Capture Zone will include portions of the Cr(VI) plume that are not reduced by the IRZ, including: (1) where Cr[VI] is greater than 32 μg/L within the floodplain and to the east of the planned IRZ wells; and (2) where Cr[VI] is greater than 32 μg/L within bedrock in the East Ravine area. Note that achieving this metric will not be necessary for groundwater extraction to achieve RAO 2 as discussed herein.

4.3.3 Interpretation of the Actual Zone of Hydraulic Control

Numerous factors influence the resulting dimensions of the actual zone of hydraulic control created by groundwater extraction. These factors indicate the potential complexity of determining the zone of hydraulic control created by groundwater extraction, because the subsurface—and the response to it being stressed by pumping—is complex, due in large part to natural heterogeneities. In other words, interpreting the zone of hydraulic control is difficult due to inherent uncertainties. Consequently, a single line of evidence is not considered sufficient to demonstrate plume control because the uncertainties inherent to any single method are likely too great. Therefore, plume control is best demonstrated through multiple lines of evidence.

There are a number of methods or tools available to assess plume control. Each of these methods is considered a separate line of evidence. The lines of evidence considered for this assessment are grouped into four main categories and are discussed in the following sections.

1. Interpretation of water levels
    - Groundwater flow direction based on water level pairs / three-point gradient analysis and river stage measurements
    - Groundwater flow direction based on water level contour maps (including river stage measurements)
2. Calculations
    - Simple analytical modeling
    - Groundwater discharge comparison: aquifer seepage versus pumping
    - Numerical modeling
3. Concentration trends
    - Contaminant concentrations in wells downgradient of extraction wells
4. Field methods
    - Tracer testing

4.3.3.1 Interpretation of Water Level Data

Lines of evidence involving the interpretation of water levels are the most common for hydraulic control assessments. The particular lines of evidence in this group are: (1) gradient analyses using either well pairs or three-point gradient assessments that can provide information regarding lateral flow directions in the vicinity of extraction wells; and (2) construction of water level contour maps, either hand-drawn or automated, to interpret capture zones.

Water Level Pairs / Three-Point Gradient Analysis

Assessment of water levels via water level pairs is performed to determine a sufficient hydraulic gradient that would be reflective of hydraulic plume control. In order to provide quantifiable metrics for the hydraulic control analysis associated with the river bank extraction wells, groundwater flow model runs were conducted to calculate anticipated average hydraulic gradients for select floodplain monitoring well pairs under differing extraction rate scenarios.

In model layers 3 and 4 (the deep portion of the aquifer where the river bank wells are screened and where the majority of the floodplain Cr(VI) plume exists), 6 well pairs in each model layer were selected to define the expected average hydraulic gradient differences for four scenarios: (1) ambient (non-pumping), (2) nominal river bank extraction (150 gpm), (3) decreased river bank extraction (75 gpm), and (4) increased river bank extraction (300 gpm). In all scenarios, the simulated flow conditions had the NTH IRZ turned off as this is the remedy operating condition for 75% of the time (6 months ON/ 18 months OFF). The “decreased river bank extraction” scenario (75 gpm) represents an approximation of the threshold where complete hydraulic plume control is achieved above this pumping rate and hydraulic plume control is potentially compromised below this rate. Thus, the well pair average hydraulic gradients simulated for this pumping scenario represent thresholds for hydraulic plume control. To provide a factor of “safety” or increased confidence, the same assessment was performed with a scenario of an extraction rate twenty percent greater than the 75 gpm threshold rate (90 gpm) and the well pair

average hydraulic gradients from this pumping scenario correspond to proposed gradients for this line of evidence as follows.

Model Layer 3

- MW-33-090 / MW-O: 0.0024 ft/ft
- MW-H / MW-46-175: 0.0026 ft/ft
- MW-D / MW-46-175: 0.0034 ft/ft
- MW-36-090 / MW-34-080: 0.0017 ft/t
- MW-39-080 / MW-36-090: 0.0020 ft/ft

Model Layer 4

- MW-33-210 / MW-O: 0.0023 ft/ft
- MW-H / MW-46-205: 0.0024 ft/ft
- MW-D / MW-46-205: 0.0031 ft/ft
- MW-36-100 / MW-34-100: 0.0019 ft/t
- MW-39-100 / MW-36-100: 0.0018 ft/ft

In addition, river stage measurements will be used and compared to water levels in monitoring wells representing the water table to evaluate the effect of the River Bank and East Ravine Extraction Wells on minimizing the potential discharge of groundwater containing Cr(VI) into the river.

Water Level Contour Maps

With a sufficient number of monitoring locations, the water level elevation data can be spatially integrated by contouring, either manually or via an automated method. Hand contouring will be performed as the preferred method to produce water level elevation contour lines.

For water level values at extraction wells, well efficiency effects will be considered. First, step tests will be performed at some extraction wells. Such test data will then be used to estimate well efficiency and, thus, a corrected water level will be calculated. Second, in lieu of having piezometers immediately adjacent to extraction wells, piezometers will be installed within the filter pack (outside of the extraction well casing) in some wells, and the difference between the water levels in the piezometer and in the extraction well casing during pumping will also aid in proper correction for well efficiency effects.

4.3.3.2 Calculations

Lines of evidence involving calculations generally range from a simple groundwater flux/pumping rate calculation to simple analytical models, to complex numerical flow models, including: (1) simple analytical modeling using an equation representing a well pumping from an aquifer to estimate the dimensions of a capture zone; (2) groundwater discharge comparison; and (3) numerical modeling.

Simple Analytical Modeling

A simple equation representing a well pumping from an aquifer, such as that presented in the USEPA (USEPA 2008) guidance document, can be used as a line of evidence for assessing hydraulic plume control. The equation is an expression of Darcy's Law with a 'factor,' as recommended by the USEPA guidance, to account for other potential contributions of water to the extraction location. The addition of the factor increases the requisite extraction rate to achieve a capture zone of a given width. The equation can be used to determine the maximum width of the zone of hydraulic control created when pumping at a certain extraction rate from an aquifer with certain properties.

This method is based on assumptions similar to those used for Darcy's Law itself, but nonetheless is considered a useful line of evidence. It should be noted that this assessment method is based on a single pumping well. The operation of multiple pumping wells will create four zones of hydraulic control that, with sufficient individual extraction rates, will each be larger in dimension due to the superposition of drawdown effects. Thus, this line of

evidence should be viewed as conservative (i.e., understates the dimensions of the zone of hydraulic control) with respect to the potential for intersecting pumping cones.

Groundwater Discharge Comparison

This line of evidence relies on: (1) an estimation of groundwater discharge through the cross-sectional area of a plume where the groundwater extraction system is located; and (2) the measured rates of groundwater extracted by the pumping wells. If the groundwater extraction rate of the plume control system exceeds the estimated natural groundwater discharge through the portion of the aquifer requiring hydraulic control, then the containment system is shown to be successfully controlling the contaminant plume. The limitations of this method are similar to the limitations associated with the previous calculation method for estimating the dimensions of a zone of hydraulic control (e.g., most notably, the variability of hydraulic conductivity), and thus groundwater discharge comparisons will only be used as one of multiple lines of evidence.

Numerical Modeling

The most robust line of evidence involving calculations is numerical modeling. MODFLOW, a three-dimensional groundwater flow simulation program developed by the United States Geological Survey (USGS)—and currently being used to simulate groundwater flow at the site and to assist in the design of the remedy—will continue to be used to evaluate hydraulic control. MODFLOW will generate a simulated flow field, and groundwater flow paths can then be assessed using path line or particle-tracking procedures such as the MODPATH or MODALL simulations. Due to the limitations associated with locating monitoring wells downgradient of the River Bank and East Ravine Extraction Wells (i.e., the presence of the Colorado River), the use of numeric modeling will be an important line of evidence.

4.3.3.3 Concentration Trends

Although the concentration trends line-of-evidence approach is completely different from other approaches (i.e., water levels analysis or hydraulic calculations), it can be integrated with those other lines of evidence. In the concentration trends approach, assessment of hydraulic plume control is performed by evaluating the contaminant concentration trends in wells downgradient of the extraction wells as well as surface water samples from the river. If the analysis of water level data indicates that an extraction system is likely to be preventing any further migration of a plume, then this should also be evident in the concentration response. There are two principles that are applied for this line of evidence:

1. If hydraulic plume control is likely achieved, wells that are not currently impacted by contaminants (e.g., sentinel wells in Arizona) will remain without impacts over time as long as the dimensions of the zone of hydraulic control do not expand beyond the locations of the sentinel wells to the extent that the sentinel wells are within the capture zone.
2. If hydraulic plume control is likely achieved, wells located downgradient of the capture system, but still within the plume, will show decreasing concentrations over time. At the Topock site, there currently are no monitoring wells that are within the Cr(VI) plume but downgradient of the expected dimensions of the zone of hydraulic control. Therefore, this principle is not expected to be applied for the concentration trends line of evidence.

Due to various stresses that will be placed on the aquifer over time from changes in injection and extraction along with natural stresses such as changes in river stage and other various natural phenomena, the timing of groundwater sample collection will be assessed with the transient water level data collected via pressure transducers in order to potentially alter the timing of sample collection to better reflect water quality variability as a function of seasonal variations in river stage and corresponding groundwater level changes.

4.3.3.4 Field Methods

The one field method that establishes the actual path of groundwater migration is injecting a tracer into an aquifer and observing that tracer at some location downgradient of the injection point. The use of tracers has several advantages. However, as outlined in the USEPA (USEPA 2008) guidance document, the use of tracer

testing can have significant limitations. For this reason, tracer testing will be considered as a line of evidence for hydraulic control assessments as a method to address particular uncertainties at specific locations rather than as a general, widespread indicator.

4.3.4 Demonstration of Consistency Between Required Control and the Actual Zone of Hydraulic Control

The final step in the assessment process is evaluating consistency between the requirement for hydraulic control and the interpreted zone of hydraulic control created by groundwater extraction. This step comprises four main components illuminated by key questions:

1. Assess the requirements and objectives. Does the current system achieve RAOs with respect to hydraulic plume control?
2. Assess uncertainties in the interpretation of the zone of hydraulic control. Are alternative interpretations possible that would change the conclusions as to whether or not sufficient plume control is achieved? In other words, are there data gaps that could be practicably filled?
3. Assess the need for additional characterization and/or monitoring. Is there a need for additional plume delineation or additional monitoring locations to increase the confidence in whether or not actual hydraulic plume control is sufficient?
4. Evaluate the need to reduce or increase extraction rates. Should extraction rates, number of extraction wells, and/or locations be modified based on the results of the analysis?

This assessment will be presented in a way consistent with the recommended approach as outlined in the USEPA (USEPA 2008) guidance document (pp. 26-29). PG&E will present an overview of the assessment in a table that juxtaposes each of the steps and lines of evidence with the conclusions relevant to each of the steps/lines of evidence (consistent with Exhibit 9 of the guidance document, p. 29). This will include references to appropriate maps, model outputs, and other graphics as necessary to provide the basis for the conclusions. It is expected that demonstrations of hydraulic control at the Topock site will rely more on some lines of evidence (e.g., numerical modeling) than others because of the nature of the site and challenges presented by the relative location of the extraction wells to the Colorado River (i.e., the river precludes the installation of wells and collection of data in areas normally investigated for such demonstrations). However, all site data available will be used in support of the assessments in an iterative way to identify any data gaps that create uncertainty in the conclusions and to fill those data gaps as practicable and necessary.

Table 4.2-1
Process Control Monitoring Program Analytes and Sampling Frequencies
Groundwater Remedy Operation and Maintenance Manual
Volume 2: Sampling and Monitoring Plan
PG&E Topock Compressor Station, Needles, California

Analytes:	TOC	Cr(VI)	Cr(T)	Dissolved Mn/Fe/As/Ba	Nitrate	Sulfate	Alkalinity, Cations, Anions, TDS	Total Fe/Mn	Water Level
National Trails Highway In-Situ Reactive Zone[5]									
Dose Response Monitoring Wells	M(yr), Q	M(yr), Q	Q(yr), SA	M(yr), Q	M(yr), Q	M(yr), Q	as needed	---	Q
Downgradient Monitoring Wells	Q	Q	SA	Q	Q[3]	as needed	as needed	---	Q
Riverbank Extraction Monitoring Wells[4]	Q	Q	SA	Q	Q[3]	as needed	as needed	---	Q / T
Northern NTH Extraction Monitoring Wells	---	Q	SA	---	---	---	---	---	Q / T
Surface Water	---	Q	SA	Q	---	---	---	---	Q
Northern NTH and Riverbank Extraction Wells	M(Q), Q	M(Q), Q	---	M(Q), Q	---	---	as needed	as needed	Q / T
Combined Extraction Stream	M(Q), Q	M(Q), Q	---	M(Q), Q	---	as needed	as needed	as needed	---
Inner Recirculation Loop[5]									
Dose Response Monitoring Wells	Q[1]	Q	Q(yr), SA	Q	Q[1]	as needed	as needed	---	Q
Downgradient Monitoring Wells	---	SA	SA	SA	SA[1]	as needed	as needed	---	Q
Byproduct Monitoring Wells	SA[1]	SA	SA	SA	SA[1]	as needed	as needed	---	Q
Sitewide Monitoring Well Network	---	---	---	---	---	---	---	---	Q
Topock Compressor Station Recirculation Loop[5]									
Dose Response Monitoring Wells	Q	Q	Q(yr), SA	Q	Q	as needed	as needed	---	Q
Downgradient Monitoring Wells	SA	SA	SA	SA	SA	as needed	as needed	---	Q
Byproduct Monitoring Wells	as needed	A or BE	A or BE	A or BE	---[6]	---	---	---	Q
Transwestern Bench Extraction Monitoring Wells	---	Q	SA	---	---	---	---	---	Q / T
East Ravine Extraction Monitoring Wells[4]	---	Q	SA	---	---	---	---	---	Q / T
TW Bench Extraction Wells, East Ravine Extraction Wells	M(Q), Q	M(Q), Q	---	M(Q), Q	---	---	as needed	as needed	Q / T
Combined Extraction Stream	M(Q), Q	M(Q), Q	---	M(Q), Q	---	---	as needed	as needed	--
Freshwater Injection[5]									
Arsenic Monitoring Wells	---	---	---	Q[2]	---	---	---	---	Q

Notes:
Sampling program will be re-evaluated after two years of operation.
[1] If associated injection wells receive carbon injections
[2] Arsenic only (other species if present in injected water above background)
[3] Frequency may be less for shallow wells in the natural reducing rind where nitrate concentrations are non-detect at baseline
[4] Frequency will be less for Arizona wells MW-54, MW-55, and MW-56, with annual monitoring for Cr(VI).
[5] Data collection for each part of the system will begin when operation of that part of the system starts.
[6] Annually for MW-09, MW-10, and MW-10D.

Frequencies:
T: Potentially monitored continuously via transducer
M: Monthly
Q: Quarterly
SA: Semi-Annually
A: Annually
BE: Biennially
(yr): Frequency for the first year, frequency reduction to be considered after first year

Analytes:
TOC: Total organic carbon
Cr(VI): Chromium (VI)
Cr(T): Total dissolved chromium
Mn: Manganese
Fe: Iron
As: Arsenic
Ba: Barium
TDS: Total dissolved solids

SECTION 5

Other Sampling and Monitoring

5.1 Monitoring for COPCs

The RCRA Facility Investigation/Remedial Investigation Volume 2 Report and Volume 2 Addendum (CH2M HILL 2009a, 2009b) described that, in addition to Cr(VI), three constituents in groundwater—namely molybdenum, selenium, and nitrate—are potentially related to past releases from SWMU 1/AOC 1. Although the groundwater risk assessment concluded that these three constituents were not present in groundwater at levels of potential concern to future human health or the environment (ARCADIS 2009), DTSC and DOI directed that molybdenum, selenium, and nitrate be monitored in the site-wide groundwater monitoring program and that their associated impacts be considered in future soil and soil to groundwater risk evaluations (DTSC 2009, DOI 2009). The agencies concluded that although the non-cancer hazards associated with these constituents are much lower than those associated with Cr(VI), these constituents do have risks above a hazard index (HI) of 1 and they do contribute to a hazard quotient greater than 1 at localized areas within the plume.

This section provides a description of the monitoring program proposed for these three non-chromium COPCs.

5.1.1 Sampling Locations

The sampling locations for the non-chromium COPCs were selected based on the distribution of these compounds in groundwater. Figures 5.1-1 through 5.1-3 show the average concentrations of one or more COPCs in groundwater. Monitoring wells where COPCs exceed background were included in the monitoring program. In addition, monitoring wells that will be downgradient from areas where COPC concentrations are elevated above background when the remedy is active were also included. Because the remedy is designed to move groundwater across the IRZ, most of these downgradient wells are located on the floodplain or near National Trails Highway. This monitoring network is designed to track COPC concentrations in areas where they are currently elevated as well as areas where they may be transported during the remedial action. The monitoring locations and frequencies for the non-chromium COPCs are shown in Table 2.1-2. Per DTSC's request (60% BOD Report Response to Comment (RTC) #710 DTSC-223; see Appendix I of the Final BOD Report for a complete listing of comments, responses to comments, and resolution on the 60% design documents), a separate COPC monitoring table (Table 2.1-6 in Section 2) was prepared with input from DTSC to provide more information about which wells have elevated concentrations of COPCs and to include wells where nitrate will be sampled for process control monitoring.

Based on monitoring data collected to date, molybdenum is the COPC for which elevated concentrations above background are most widespread (Figure 5.1-1). Many of the bedrock wells in the East Ravine have molybdenum concentrations above background. Molybdenum is also more widespread in the alluvial aquifer, particularly in the deep zone. At the final design stage, there are 72 wells identified for molybdenum sampling.

Selenium is elevated above background in just a few wells scattered across the site and only in the alluvial aquifer. The highest concentrations are in the vicinity of the compressor station (Figure 5.1-2). It is not elevated in bedrock wells. At the final design stage, there are 41 wells identified for selenium sampling.

Nitrate is distributed similarly to selenium, with highest concentrations near the compressor station and a few sporadic other locations (Figure 5.1-3). Because nitrate is a sensitive geochemical indicator parameter, extensive nitrate monitoring is proposed to be performed as part of the process control monitoring for the final remedy (see Section 4.0). The 47 sampling locations where nitrate is assigned an annual monitoring frequency in Table 2.1-4 are intended primarily for monitoring nitrate as a non-chromium COPC. The sampling locations where nitrate is assigned a more frequent monitoring interval are intended for process control monitoring.

If there is a need to perform another risk assessment in the future, it is recommended that a wider network of wells be included for non-chromium COPC monitoring. The network proposed herein is specifically designed to

monitor the highest concentrations of these compounds and will therefore not accurately reflect their average concentrations across the site.

5.1.2 COPC Perimeter Assessment Plan

The Perimeter Assessment Plan (PAP) has been developed in response to comments from DTSC requesting that threshold concentrations and a decision tree be developed for COPC monitoring. Because COPCs will be moved around by the pumping and injection necessary to push the chromium plume through the IRZ, COPC concentrations in interior wells are expected to change throughout the course of the remedial action. Some wells will show increases in COPC concentrations and some will show decreases. It is therefore not practical or useful to establish numerical COPC threshold values for wells in the interior of the chromium plume.

Ultimately, the remedial action should not result in elevated concentrations of COPCs being spread beyond the chromium plume footprint (it is recognized that there are areas where elevated COPCs already exist outside the boundary of the chromium plume). The PAP is designed to monitor the edges of the chromium plume and the elevated COPC areas outside the chromium plume to provide assurance that elevated concentrations of COPCs are being contained with the area of active remediation. The PAP is modeled after the IM-3 Performance Monitoring Program, which was designed to monitor the edge of the chromium plume in the northern part of the floodplain. The wells that will be included in the PAP for monitoring of molybdenum, selenium, and nitrate are shown on Figures 5.1-4, 5.1-5, and 5.1-6, respectively.

Note that bedrock wells in the East Ravine are not included in the PAP. This is due to the fact that there is no injection in the East Ravine that would spread COPCs. The East Ravine will be remediated using extraction wells, so all gradients will be inward with regard to the current COPC distribution. If COPC concentrations were to go up in an East Ravine well, there would be no appropriate mitigating measures that could be made to address it, other than continuing the pump and treat process until the concentrations eventually went back down. This would be analogous to the situation with increasing chromium concentrations in well MW-34-100 during the first few years of IM-3 operations. After continued IM-3 pumping, concentrations in MW-34-100 eventually began to decline.

The PAP decision tree is shown in Figure 5.1-7. This is modeled after the PMP decision tree. It incorporates notifications and actions to be taken when a PAP well exceeds a trigger level. Trigger levels would be established prior to the startup of the remedial action, when additional COPC data will be available for the existing PAP wells and several rounds of samples will be available for the yet to be installed PAP wells.

Trigger levels will be based on Shewhart control limits calculated from the most recent eight sample results, consistent with what is currently done for wells with Cr(VI) concentrations above 20 µg/L in the IM3 Performance Monitoring Program. For the PAP, Shewhart control limits would be calculated for all wells. Initially, some control limits may need to be calculated using fewer than eight samples for newly installed wells where sampling may have recently been initiated. Control limits would be updated on at least an annual basis. If the Shewhart control limit is higher than the ARAR concentration in a well where the baseline concentration (defined based on the median of the available data) is below the ARAR, then the ARAR concentration would be used as the trigger level. For all other wells, the Shewhart control limit would be the trigger level. In wells where baseline concentrations are less than ARAR concentrations, this approach provides a conservative means of establishing a trigger value that will bring attention to rising COPC concentration before the ARAR concentration is reached. In wells where baseline concentrations are above ARAR concentration, the Shewhart control limit provides a means of identifying wells where a statistically significant increase in concentration has occurred.

5.1.3 Sampling Frequencies

An annual sampling frequency is proposed for the non-chromium COPCs. This is considered to be adequate for tracking the changes in the distribution of these constituents during the remedial action. Trend analysis will be conducted using the data collected and monitoring frequency can be increased or decreased if needed in any wells or areas.

5.2 Monitoring of Freshwater Source (HNWR-1A)

This section describes the program that will be implemented to monitor the quality of water produced by the Havasu National Wildlife Reserve (HNWR) well HNWR-1A during the implementation of the Topock remedial action. The purpose of this monitoring program is to ensure that the quality of the fresh water meets the desired water quality for the freshwater injection system at the Topock site (i.e., desired quality to prevent well and aquifer plugging and to protect the receiving aquifer water quality). A detailed discussion of the desired water quality for injection is included in the Final BOD Report (Section 3.3, Freshwater Supply).

The existing, nearby HNWR-1 well has been sampled and analyzed by Pacific Gas and Electric Company (PG&E) between November 2010 and January 2013 (see Table 5.2-1), and again in October 2013 and February 2014 during the field implementation of the Alternative Freshwater Source Evaluation (see Table 5.2-2). The analytical suite has included a broad range of compounds, both organic and inorganic. Arsenic and Cr(VI) were the only two compounds that exceeded the Maximum Contaminant Levels (10 µg/L). The naturally occurring arsenic concentration in well HNWR-1 ranges from 14 to 16 µg/L, below the site background concentration of 24.3 µg/L but above the concentration in existing wells near the freshwater injection area. The Cr(VI) concentration ranges from 14 to 20 µg/L, which is well below the site background concentration of 31.8 µg/L.

PG&E has sampled the new well HNWR-1A during the field implementation of the Alternative Freshwater Source Evaluation (see Table 5.2-3). Similar to HNWR-1, arsenic and Cr(VI) were the only two compounds that exceeded the Maximum Contaminant Levels. The naturally occurring arsenic concentration ranges from 12 to 13 µg/L, below the site background concentration of 24.3 µg/L. The Cr(VI) concentration ranges from 16 to 18 µg/L, which is well below the site background concentration of 31.8 µg/L (see Table 5.2-3).

Generally, the water from HNWR-1 and HNWR-1A contain concentrations of selenium, molybdenum, and nitrate that are significantly lower than those found at the Topock site. In HNWR-1A, the selenium concentration ranges from 0.88 to 1.0 µg/L; the molybdenum concentration ranges from 9.3 to 9.8 µg/L; and the nitrate concentration is 2.6 mg/L (see Table 5.2-3).

5.2.1 Proposed Analytes and Frequencies

The monitoring program for HNWR-1A is designed to track concentrations of the COC and COPCs associated with Topock as well as to provide periodic monitoring for a wide range of potential contaminants, both organic and inorganic, that have never been detected at the Topock site but could be undesirable or harmful if present in the injected water. Because of the lack of nearby sources, the likelihood of organic contaminants being present in HNWR-1A is small; therefore, the frequency of analysis for organics and pesticides will be lower than for metals and common ions.

The monitoring program will include metals, common anions and cations, total dissolved and suspended solids, total organic carbon, and stable isotopes of oxygen and hydrogen. These analyses provide a means for tracking overall changes in water quality with time. In addition, one of the common cations, manganese (Mn), has been found to be an important factor in partial plugging of injection wells at the Topock site, so it will be important to track Mn concentrations in order to maintain the performance of the injection wells. The proposed analytes list for HNWR-1A is provided in Table 5.2-4.

Monitoring frequency for the inorganic suite will be monthly for the first 6 months and quarterly for the remainder of the first year of operation, assuming the water quality is generally stable at that time (if the water quality appears to be changing rapidly, monthly sampling would be continued beyond the first 6 months). Following the first year, monitoring frequency will switch to semi-annual. Monitoring frequency for the organic analytical suite will be annual for the first 2 years, switching to every other year in subsequent years.

It is not anticipated that the freshwater flow rate would be varied on any regular basis; however, if there was a future reconfiguration of the remedy that caused a significant increase in freshwater pumping rate, the need for additional sampling frequency would be evaluated based on the data available at that time. Further, the

monitoring frequency can be adjusted as needed based on actual data and information collected at the supply well (HNWR-1A) as well as at the monitoring locations for the freshwater injection points.

5.2.2 Source Water Assessment

In response to comments received at the May 16, 2012 TWG meeting on protection of the water quality at HNWR-1A and the potential need for additional monitoring wells for source protection, a source water assessment was conducted to identify potential sources of contaminants within the radius of influence of a supply well (HWNR-1A). Arizona guidelines provide a method of calculating the appropriate radius for this assessment, based on a simple equation that represents the area from which water would be drawn over a specific period of time. Arizona uses a travel time of five years for public water supply assessments.

The calculated fixed-radius equation from Arizona guidance (ADEQ 1999) is as follows:

$$r = \sqrt{\left(\frac{Qt}{\pi n H}\right)}$$

Where:

Q = well's discharge in cubic feet per year (31,620,321 ft^3/yr)
t = time of travel in years (5 years for public supply wells in Arizona)
π = 3.1416
n = aquifer porosity (11 percent)
H = screen length in feet (110 feet)
r = radius (defines the boundary of the delineated source water protection area in feet around the well)

For the HNWR-1A well, with a screened interval spanning 110 feet and pumping at the current design (modeled) flow rate of 450 gpm, this equation resolves to a radius of 2,039 feet. This radius extends to within 1,200 feet of the Kinder Morgan Mojave Topock Compressor Station in Arizona[1] (see Exhibit 5.2-1). As shown in Exhibit 5.2-1, the majority of the property in this radius is undeveloped (most is HNWR land); known/planned developments in the area include the Topock Marina on Historic Route 66, Topock Mobile Home Park, nearby private properties, Southwest Water Company, BNSF Railroad, Interstate 40, and Kinder Morgan Mojave Topock Compressor Station. Also within this radius is an area that consists of rusty cans and other metal debris scattered on the land surface[2].

Water produced by HNWR-1 is expected to be a mix of water recharged from the Colorado River and groundwater flowing down from the Sacramento Valley to the east (CH2M HILL 2012c). Note that groundwater travel time from the river to a well located at the distance of HNWR-1 well is likely many months to a few years. Depending on the transport properties, some contaminants move much slower than the water. All contaminants are subject to dispersion and dilution between the river and a well. So if a contaminant is found in the river, there is ample time to stop pumping or institute additional monitoring before it shows up in a well near the river, and the concentration of the contaminant in the well is likely to be considerably less than in the river.

[1] Per DTSC's request in 60% BOD Report RTC #156 DTSC-56 (see Appendix I of the Final BOD Report), an internet search regarding the former underground storage tanks (USTs) at the Topock Marina was conducted. There were four USTs at the Marina; the first one was permanently removed in October 1990, two were permanently removed in January 1993, and the fourth was permanently removed in November 2010. There was a release reported in October 1990; that case was closed in March 1998.

[2] As detailed in 60% BOD Report RTC #158 DTSC-57, a question was raised in a public meeting about a rumored former "Topock Dump" located within this radius that reportedly contained trash from local residents. PG&E was not aware of any such former dump. A member of the Fort Mojave Indian Tribe who has lived in the area for many years indicated that the area of debris and can scatter was the only "dump" that he knew of in the area and speculated that it might have been trash left from a railroad work camp. DTSC visited the cited area in Arizona and it did not appear to be a significant threat to groundwater resources. PG&E agrees that this debris does not appear to represent a threat to groundwater.



LEGEND

⊙ Existing Well

Notes:
1. It is likely that an abandoned well owned by Southwest Gas, was once located at the site where Topock-2 and 3 wells currently exist.

EXHIBIT 5.2-1
RADIUS OF 5 YEAR GROUNDWATER TRAVEL TIME TO HNWR-1A
GROUNDWATER REMEDY OPERATION AND MAINTENANCE MANUAL
VOLUME 2: SAMPLING AND MONITORING PLAN
PG&E TOPOCK COMPRESSOR STATION, NEEDLES CALIFORNIA

PG&E is not aware of any monitoring wells in Sacramento Wash. The property upstream in Sacramento Wash is undeveloped for miles. The ADEQ conducted a survey of water quality in the Sacramento Valley in 1999 (ADEQ 2001). This survey found fluoride, chloride, and TDS to be the only constituents present in slightly elevated concentrations in the Topock area. Considering the lack of existing contaminant sources in the Sacramento Valley (Exhibit 5.2-1), the installation of monitoring wells in Sacramento Wash upstream of HNWR-1A for source water protection is not considered warranted. The Topock-2 and -3 wells are located between HNWR-1A and the area with rusty can and other metal debris, so in the unlikely event that groundwater contaminants are migrating from the dump area, they would be expected to be detected first at Topock-2 and -3. In response to DTSC's request (60% RTC #709 DTSC-222), PG&E will provide water quality information from Topock-2 and -3 wells as PG&E receives the information from Southwest Water.

As mentioned previously, the majority component of the water produced from HNWR-1 should originate from the Colorado River. The travel time of constituents in river water to a nearby well may take many years, depending on their mobility (CH2M HILL 2012c); therefore, river water quality is a good indicator and should be used for source water protection of HNWR-1A. There is an abundance of water quality data available for the Colorado River. The river in the immediate vicinity of the site and downstream is monitored by the Metropolitan Water District of Southern California (MWD). MWD samples for a wide range of parameters, including emerging contaminants. In addition, the Lower Colorado River Regional Water Quality Database (http://www.snwa.com/apps/wq_database/index.cfml) contains more than 2 million records covering nearly 1,000 different parameters, including depth, temperature, pH, conductivity, dissolved oxygen, nutrients, metals, and organics. Information in the database is provided by Southern Nevada Water Authority, City of Las Vegas, Clark County Water Reclamation District, University of Nevada Las Vegas (UNLV), U.S. Bureau of Reclamation Denver, U.S. Bureau of Reclamation Lower Colorado River, City of Henderson, MWD, Clark County Regional Flood Control District, and the Colorado River Regional Sewer Coalition. Considering the large volume of good quality data available on water quality in the Lower Colorado River, additional river sampling for the purposes of source water protection of HNWR-1A is not considered warranted.

At DTSC's request and per resolution of 60% RTC #161 DTSC-60, the MW-55 well cluster will be sampled periodically as data at this location could have some value in detecting contaminants originating from any sources in the developed area around the Topock Marina (see Table 5.2-5).

5.3 Process Control Monitoring for Remedy-produced Water Management System

This section describes the program that will be implemented to monitor the quality of water at the Remedy-produced Water Management System during the implementation of the Topock remedial action. The primary objective for process control monitoring is to evaluate effluent water quality and its possible effects with regard to the reuse options (Cooling Tower makeup and re-injection to the NTH IRZ wells), and allow for process optimization/adjustment. Periodic monitoring of influent water will also assist with process optimization.

5.3.1 Sampling Locations

Samples will be collected from the following areas of the Remedy-produced Water Management System:

- Interconnecting piping sampling port to the four influent tanks
- Remedy A-Side filter system effluent sampling port
- Conditioned water storage tank (TNK-RTP01-1410) discharge piping sampling port
- Conditioned water tank farm (TNK-RTP01-1401 and TNK-RTP01-1402) discharge piping sampling port

Sample locations are identified on the piping and instrumentation diagram (P&ID) shown on Exhibit 5.3-1. Samples will be collected only during regular daytime working hours on the weekdays and while the Remedy-produced Water Management System is in service.

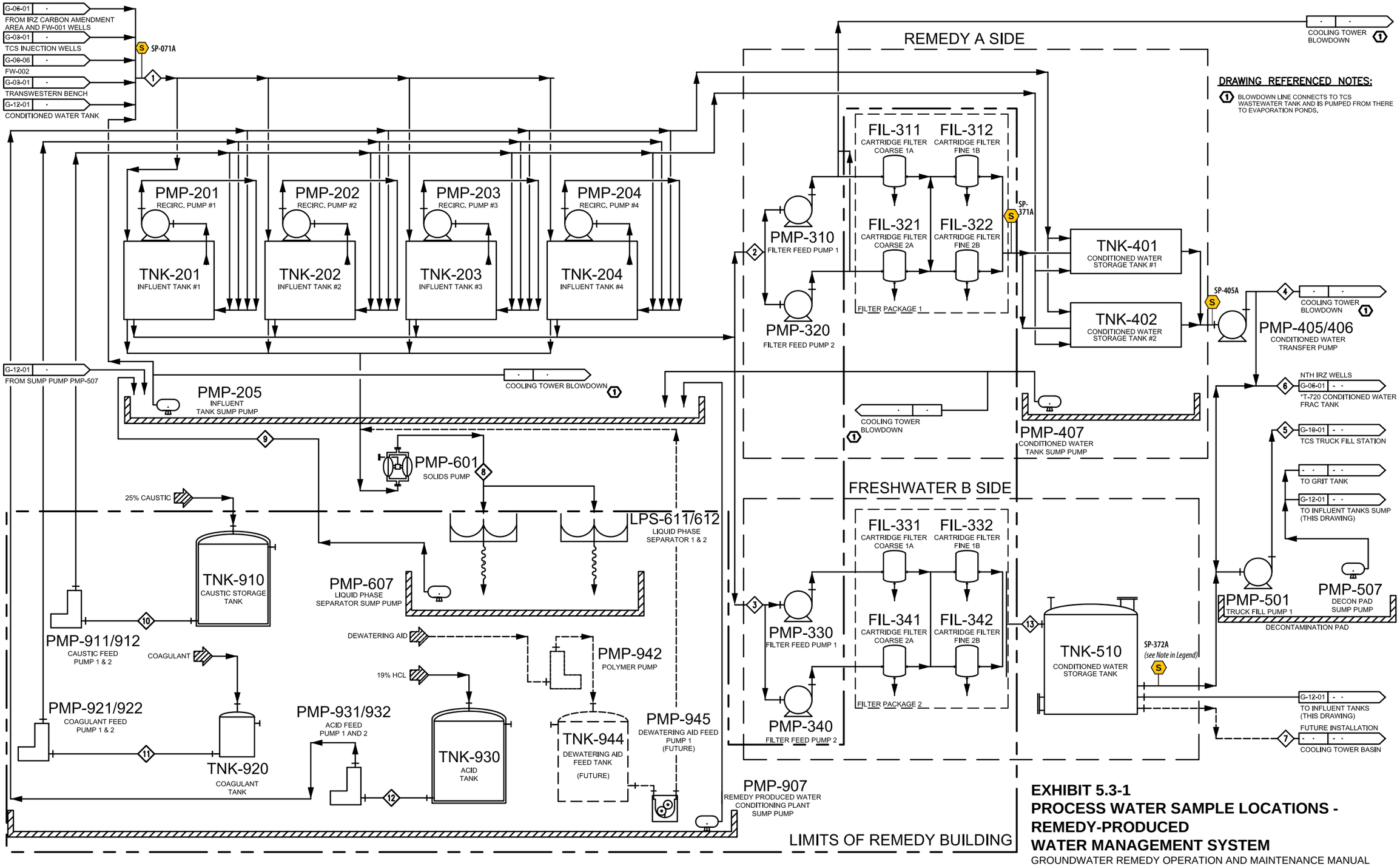

LEGEND (S) Sampling Port

Note for SP-372A:
A single sampling port will be installed on the common effluent pipe of TNK-510.

EXHIBIT 5.3-1
PROCESS WATER SAMPLE LOCATIONS - REMEDY-PRODUCED WATER MANAGEMENT SYSTEM
GROUNDWATER REMEDY OPERATION AND MAINTENANCE MANUAL
VOLUME 2: SAMPLING AND MONITORING PLAN
PG&E TOPOCK COMPRESSOR STATION,
NEEDLES, CALIFORNIA

UPDATED JULY 2015

CH2MHILL

ES102411163118BAO_Fig_5-3-1_PROCESS WATER SAMPLE SAMPLE LOCATIONS_v3.ai_071515_lho

5.3.2 Sampling Analytes and Frequencies

The monitoring program will include metals, common anions and cations, total dissolved and suspended solids, and total organic carbon. The proposed analytical suite for process control monitoring is provided in Table 5.3-1.

Samples will be collected for the inorganic analytical suite annually. Field parameters will be measured on a daily or weekly basis as shown on Table 5.3-1. The monitoring frequency can be adjusted as needed based on actual data and information collected during operation of the Remedy-produced Water Management System.

5.4 Monitoring for Domestic/Private Wells

Per 60% RTC #709 DTSC-222, DTSC directed PG&E to implement a domestic/private water well monitoring program to evaluate potential effects the remedy could impart to private wells both chemically and hydraulically. Specific wells mentioned in the 60% directive include: a) those located in the vicinity of the groundwater remedy (e.g., Marina-1, Sanders, and Smith wells) to ensure the viability of the wells is not jeopardized by the remedy; b) well GRSV-2 (also known as RPGS)/MTS-1/MTS-2 to assess potential effects to the Arizona freshwater pumping well; c) Topock-2 and -3 wells; and d) Moabi Regional Park wells. In compliance with the above directive, PG&E researched the logistics associated with sampling the above wells and provided a summary in Exhibit 5.4-1.

5.4.1 Sampling Locations and Logistics

On the California side of the Colorado River, PG&E has been and will continue to collect and report data from the two Moabi Regional Park wells. On the Arizona side of the Colorado River, PG&E has received permission to sample Marina-1 from the Topock Marina owner, and MTS-1 and MTS-2 from Kinder Morgan. PG&E has and will continue to reach out to the owners of the GSRV-2, Sanders, and Smith wells. It appears that the Smith well has been disconnected at the ground surface (i.e., the connection pipe was severed). The status of the Sanders well is unknown.

PG&E is making arrangements to assess the condition and sampling logistics of the Marina-1, MTS-1, and MTS-2 wells. If the Marina-1 well cannot be sampled, PG&E may propose to sample PGE-9S or 9N in its place.

Topock-2 and -3 wells are currently being sampled and reported by Southwest Water as the water purveyor. As a customer of Southwest Water, PG&E receives the water quality information and will provide it to the agencies.

5.4.2 Sampling Analytes and Frequencies

With the exception of the Moabi Regional Park wells, PG&E proposes to initially conduct a baseline sampling event for the proposed sampling locations prior to remedy startup, and subsequent sampling every two years with options to modify frequency based on better understanding of actual flow dynamics and chemical transport as the remedy progresses. Please note that PG&E will continue to sample Moabi Regional Park wells on an annual basis until remedy start-up, then will switch to the proposed biennial frequency for consistency with other wells. Table 5.4-1 presents the analytical suites for the domestic/private wells.

Well ID	Well Installation Date	Well Owner	No. of Previous Samples	Last Sample Date	Well Status/Sampling Logistics (September 2014)
Arizona					
GSRV-2	2/9/2000	RPGS LLC	13	7/10/2007	Well can be sampled with owner's permission.
Marina-1	2014	Topock Marina	0	NA	Fire water supply well. Well can be sampled with owner's permission, and will require management of large volume of purge water. Depends on water quality, the purge water can be discharged to ground near the well, transported to TCS evaporation ponds (if allowed), or transported offsite for disposal.
MTS-1	NA	Kinder Morgan	1	8/26/1991	PG&E has contacted and obtained permission from Kinder Morgan to sample well.
MTS-2	NA	Kinder Morgan	0	NA	PG&E has contacted and obtained permission from Kinder Morgan to sample well.
PGE-9S	4/22/1997	PG&E	2	7/20/2005	Inactive. Well can be sampled and will require management of large volume of purge water. Depends on water quality, the purge water can be discharged to ground near the well, transported to TCS evaporation ponds (if allowed), or transported offsite for disposal.
PGE-9N	4/4/1997	PG&E	10	5/3/2006	Inactive. Well can be sampled and will require management of large volume of purge water. Depends on water quality, the purge water can be discharged to ground near the well, transported to TCS evaporation ponds (if allowed), or transported offsite for disposal.
Smith	2/21/1998	Private Owner	0	NA	PG&E continues to reach out to well owner. Well is disconnected.
Sanders	6/6/2005	Private Owner	8	5/2/2006	PG&E continues to reach out to well owner. Current well status is unknown.
Topock 2	9/29/1980	SW Water Company	13	6/30/2006	Active well. Well can be sampled with owner's permission. PG&E will provide water quality obtained from Southwest Water to the agencies.
Topock 3	5/17/1974	SW Water Company	5	8/11/2005	Active well. Well can be sampled with owner's permission. PG&E will provide water quality obtained from Southwest Water to the agencies.
California					
Park Moabi – 3 (PM-3)	8/15/1986	San Bernardino County	50	12/19/2013	Active well. Well is sampled annually by PG&E.
Park Moabi – 4 (PM-4)	10/3/2006	San Bernardino County	10	12/19/2013	Active well. Well is sampled annually by PG&E.

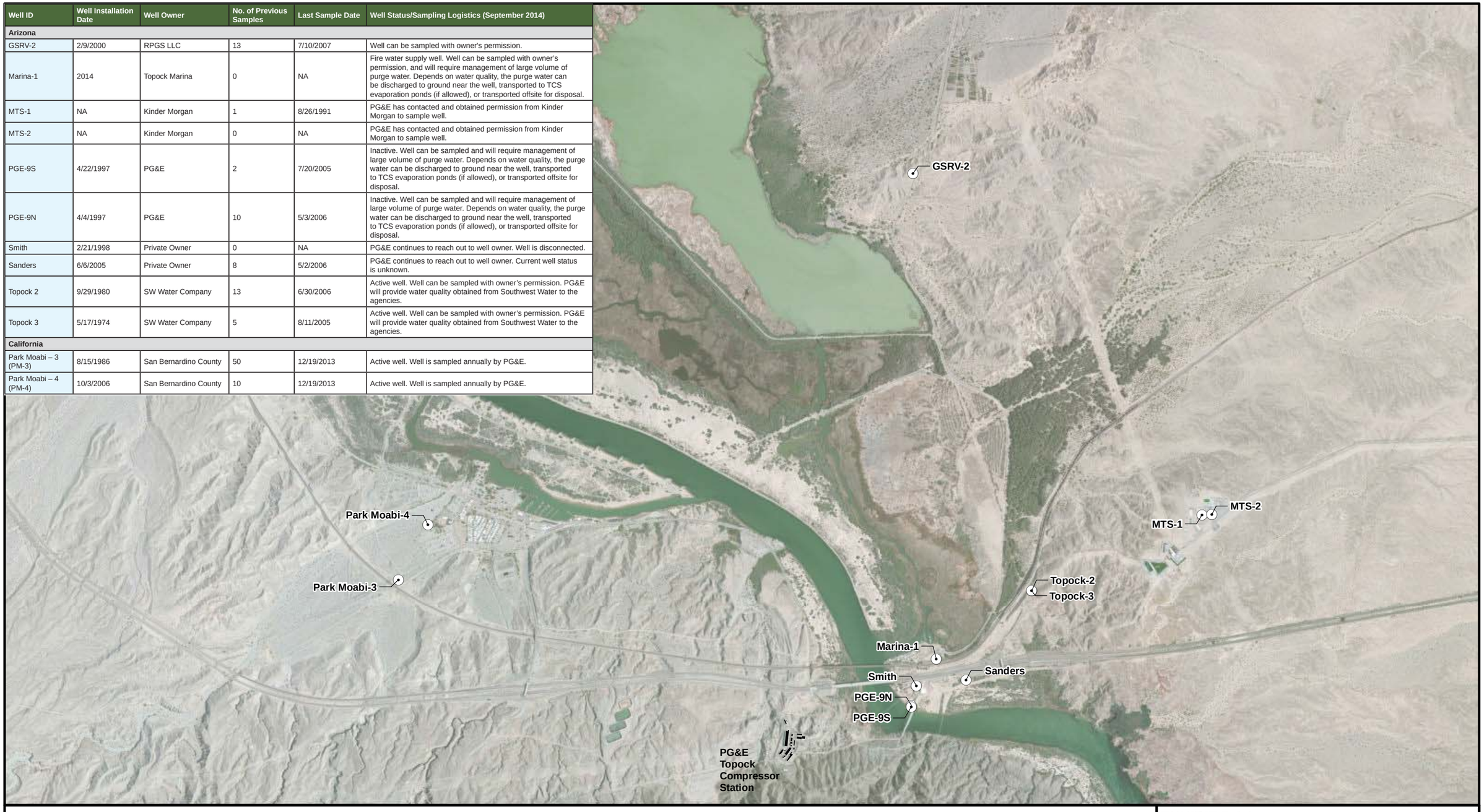

LEGEND

⊙ Private Well

N

0 0.25 0.5 1 Miles

Service Layer Credits: Source: Esri, DigitalGlobe, GeoEye, i-cubed, USDA, USGS, AEX, Getmapping, Aerogrid, IGN, IGP, swisstopo, and the GIS User Community

EXHIBIT 5.4-1
STATUS OF PRIVATE WATER WELLS IN THE AREA AND SAMPLING LOGISTICS
GROUNDWATER REMEDY
OPERATION AND MAINTENANCE MANUAL
VOLUME 2: SAMPLING AND MONITORING PLAN
PG&E TOPOCK COMPRESSOR STATION
NEEDLES, CALIFORNIA

CH2MHILL

Document Path: D:\Projects\Topock\MapFiles\2014\OM\PrivateWells.mxd
ES102411163118BAO_ Fig_5-4-1_Status_PrivateWaterWells-SamplingLoc.indd_090314_lho

TABLE 5.2-1

HNWR-1 Analytical Results (November 2010 through January 2013)

Groundwater Remedy Operation and Maintenance Manual

Volume 2: Sampling and Monitoring Plan

PG&E Topock Compressor Station, Needles, California

	Location:	HNWR-01	HNWR-01	HNWR-01	HNWR-01	HNWR-01	HNWR-01
	Sample Date:	**11/10/2010**	**2/23/2012**	**3/14/2012**	**4/4/2012**	**6/27/2012**	**1/22/2013**
Parameter	**Units**						
Field							
Dissolved oxygen	mg/L	**5.33**	**3.52**	**3.29**	**3.72**	**---**	**---**
Oxidation reduction potential	mV	**159**	**172**	**200**	**112**	**33.5**	**---**
pH	pH units	**7.84**	**7.68**	**7.61**	**8.07**	**7.51**	**---**
Salinity	%	**0.42**	**0.0662**	**0.0537**	**0.0509**	**0.439**	**---**
Specific conductance	µS/cm	**870**	**1,024**	**830**	**787**	**6,791**	**---**
Temperature	°C	**35.9**	**38.3**	**38.1**	**38.0**	**37.9**	**---**
Turbidity	NTU	**5.10**	**5.10**	**2.50**	**---**	**8.00**	**---**
Anions							
Bromide	mg/L	**---**	**---**	**---**	**---**	**---**	**---**
Chloride	mg/L	**---**	**130**	**130**	**130**	**130**	**---**
Fluoride	mg/L	**3.80**	**---**	**---**	**---**	**4.00**	**3.90**
Nitrate (as nitrogen)	mg/L	**2.50**	**2.60**	**2.50**	**2.50**	**2.60**	**---**
Nitrite as Nitrogen	mg/L	**---**	**---**	**---**	**---**	**---**	**---**
Sulfate	mg/L	**47.0**	**45.0**	**44.0**	**45.0**	**44.0**	**---**
General Chemistry							
Alkalinity, bicarb as CaCO3	mg/L	**---**	**110**	**110**	**110**	**100**	**---**
Alkalinity, carb as CaCO3	mg/L	**---**	ND (5.0)	ND (5.0)	ND (5.0)	ND (5.0)	**---**
Alkalinity, hydroxide	mg/L	**---**	ND (5.0)	ND (5.0)	ND (5.0)	ND (5.0)	**---**
Alkalinity, total as CaCO3	mg/L	**100**	**110**	**110**	**110**	**100**	**---**
Ammonia as nitrogen	mg/L	ND (0.1)	**0.13**	**0.12**	**0.15**	ND (0.1)	**---**
Cyanide	mg/L	**---**	**---**	ND (0.01)	ND (0.01)	ND (0.01)	**---**
Deuterium	0/00	**-75.3**	**-73.8**	**---**	**---**	**-77.1**	**---**
Oxygen 18	0/00	**-10.3**	**-10.2**	**---**	**---**	**-10.2**	**---**
pH	pH units	**---**	**---**	**---**	**---**	**---**	**---**
Soluble silica	mg/L	**28.6**	**---**	**---**	**---**	**25.9**	**---**
Specific conductance	µS/cm	**740**	**---**	**---**	**---**	**---**	**---**
Total dissolved solids	mg/L	**490 J**	**480**	**510**	**430**	**440**	**---**
Total Kjeldahl Nitrogen	mg/L	ND (0.4)	**---**	**---**	**---**	**---**	**---**
Total organic carbon	mg/L	ND (1.0)	ND (1.0)	ND (1.0)	ND (1.0)	ND (1.0)	**---**
Total suspended solids	mg/L	**---**	**---**	ND (10)	**---**	ND (10)	**---**
Herbicides							
2,4,5-T	µg/L	**---**	**---**	ND (2.7)	ND (0.26)	**---**	**---**
2,4,5-TP (Silvex)	µg/L	**---**	**---**	ND (2.7)	ND (0.26)	**---**	**---**
2,4-D	µg/L	**---**	**---**	ND (2.7)	ND (0.26)	**---**	**---**
2,4-DB	µg/L	**---**	**---**	ND (2.7)	ND (0.26)	**---**	**---**
4-Nitrophenol	µg/L	**---**	**---**	ND (2.7)	**---**	**---**	**---**

TABLE 5.2-1

HNWR-1 Analytical Results (November 2010 through January 2013)

Groundwater Remedy Operation and Maintenance Manual

Volume 2: Sampling and Monitoring Plan

PG&E Topock Compressor Station, Needles, California

Location:		HNWR-01	HNWR-01	HNWR-01	HNWR-01	HNWR-01	HNWR-01
Sample Date:		**11/10/2010**	**2/23/2012**	**3/14/2012**	**4/4/2012**	**6/27/2012**	**1/22/2013**
Parameter	**Units**						
Herbicides							
Dalapon	µg/L	---	---	ND (4.4)	ND (0.42)	---	---
Dicamba	µg/L	---	---	ND (2.7)	ND (0.26)	---	---
Dichlorprop	µg/L	---	---	ND (2.7)	ND (0.26)	---	---
Dinoseb	µg/L	---	---	ND (2.7)	ND (0.26)	---	---
MCPA	µg/L	---	---	ND (2.7)	ND (0.26)	---	---
MCPP	µg/L	---	---	ND (2.7)	ND (0.26)	---	---
Pentachlorophenol	µg/L	---	---	ND (2.7)	ND (0.26)	---	---
Metals							
Aluminum, dissolved	µg/L	ND (50)	---	ND (50)	ND (50)	ND (50)	---
Antimony, dissolved	µg/L	ND (10)	ND (10)	ND (10)	ND (0.5)	ND (0.5)	---
Arsenic	µg/L	---	---	---	---	---	**16.0**
Arsenic, dissolved	µg/L	**15.0**	**15.0**	**16.0**	**15.0**	**16.0**	**16.0**
Barium, dissolved	µg/L	**130**	**110**	**110**	**110**	**110**	---
Beryllium, dissolved	µg/L	ND (1.0)	ND (1.0)	ND (1.0)	ND (1.0)	ND (1.0)	---
Boron, dissolved	µg/L	**380**	---	---	---	---	---
Cadmium, dissolved	µg/L	ND (3.0)	ND (3.0)	ND (3.0)	ND (3.0)	ND (3.0)	---
Calcium, dissolved	µg/L	**23,000**	**19,000 J**	**19,000**	**20,000**	---	---
Chromium, Hexavalent	µg/L	**17.5**	**15.0**	**18.0**	**14.0**	**15.0**	---
Chromium, total dissolved	µg/L	**19.2**	**16.0**	**18.0**	**17.0**	**18.0**	---
Cobalt, dissolved	µg/L	ND (3.0)	ND (3.0)	ND (3.0)	ND (3.0)	ND (3.0)	---
Copper, dissolved	µg/L	ND (5.0)	ND (5.0)	ND (5.0)	ND (5.0)	ND (5.0)	---
Iron, dissolved	µg/L	ND (20)	**37.0**	ND (20)	**25.0**	**38.0**	---
Lead, dissolved	µg/L	ND (10)	ND (10)	ND (10)	ND (10)	ND (10)	---
Magnesium, dissolved	µg/L	**4,000**	**3,100**	**3,200 J**	**3,100 J**	---	---
Manganese, dissolved	µg/L	ND (10)	**1.90**	**0.64**	**1.70**	**1.70**	---
Mercury, dissolved	µg/L	ND (0.2)	ND (0.2)	ND (0.2)	ND (0.2)	ND (0.2)	---
Molybdenum, dissolved	µg/L	**11.0**	**9.40**	**10.0**	**9.00**	**9.10**	---
Nickel, dissolved	µg/L	ND (5.0)	ND (5.0)	ND (5.0)	ND (5.0)	ND (5.0)	---
Potassium, dissolved	µg/L	**5,100**	**4,400**	**4,000**	**3,700**	---	---
Selenium, dissolved	µg/L	**0.73**	**0.87**	**0.75**	**0.75**	**0.71**	---
Silver, dissolved	µg/L	ND (3.0)	ND (3.0)	ND (3.0)	ND (3.0)	ND (3.0) J	---
Sodium, dissolved	µg/L	**130,000**	**130,000**	**130,000**	**130,000**	---	---
Soluble silica	mg/L	---	---	---	---	---	---
Thallium, dissolved	µg/L	ND (0.5)	ND (0.5)	ND (0.5)	ND (0.5)	ND (0.5)	---
Vanadium, dissolved	µg/L	**20.0**	**21.0**	**22.0 J**	**20.0**	**20.0**	---
Zinc, dissolved	µg/L	ND (10)	ND (10)	**16.0**	ND (10)	ND (10)	---

TABLE 5.2-1
HNWR-1 Analytical Results (November 2010 through January 2013)
Groundwater Remedy Operation and Maintenance Manual
Volume 2: Sampling and Monitoring Plan
PG&E Topock Compressor Station, Needles, California

Location:		HNWR-01	HNWR-01	HNWR-01	HNWR-01	HNWR-01	HNWR-01
Sample Date:		**11/10/2010**	**2/23/2012**	**3/14/2012**	**4/4/2012**	**6/27/2012**	**1/22/2013**
Parameter	**Units**						
Perchlorate							
Perchlorate	µg/L	---	---	ND (2.0)	ND (2.0)	---	---
Pesticides							
4,4-DDD	µg/L	---	---	ND (0.053)	ND (0.052)	---	---
4,4-DDE	µg/L	---	---	ND (0.053)	ND (0.052)	---	---
4,4-DDT	µg/L	---	---	ND (0.053)	ND (0.052)	---	---
Aldrin	µg/L	---	---	ND (0.027)	ND (0.026)	---	---
alpha-BHC	µg/L	---	---	ND (0.027)	ND (0.026)	---	---
alpha-Chlordane	µg/L	---	---	ND (0.027)	ND (0.026)	---	---
beta-BHC	µg/L	---	---	ND (0.027)	ND (0.026)	---	---
delta-BHC	µg/L	---	---	ND (0.027)	ND (0.026)	---	---
Dieldrin	µg/L	---	---	ND (0.053)	ND (0.052)	---	---
Endo sulfan I	µg/L	---	---	ND (0.027)	ND (0.026)	---	---
Endo sulfan II	µg/L	---	---	ND (0.053)	ND (0.052)	---	---
Endosulfan sulfate	µg/L	---	---	ND (0.053)	ND (0.052)	---	---
Endrin	µg/L	---	---	ND (0.053)	ND (0.052)	---	---
Endrin aldehyde	µg/L	---	---	ND (0.053)	ND (0.052)	---	---
gamma-BHC	µg/L	---	---	ND (0.027)	ND (0.026)	---	---
gamma-Chlordane	µg/L	---	---	ND (0.027)	ND (0.026)	---	---
Heptachlor	µg/L	---	---	ND (0.027)	ND (0.026)	---	---
Heptachlor Epoxide	µg/L	---	---	ND (0.027)	ND (0.026)	---	---
Methoxy chlor	µg/L	---	---	ND (0.27)	ND (0.26)	---	---
Toxaphene	µg/L	---	---	ND (2.7) J	ND (2.6) J	---	---
Polyaromatic Hydrocarbons							
1-Methyl naphthalene	µg/L	---	---	ND (0.22)	ND (0.2)	---	---
2-Methyl naphthalene	µg/L	---	---	ND (0.22)	ND (0.2)	---	---
Acenaphthene	µg/L	---	---	ND (0.22)	ND (0.2)	---	---
Acenaphthylene	µg/L	---	---	ND (0.22)	ND (0.2)	---	---
Anthracene	µg/L	---	---	ND (0.22)	ND (0.2)	---	---
B(a)P Equivalent	µg/L	---	---	ND (0.19)	ND (0.18)	---	---
Benzo (a) anthracene	µg/L	---	---	ND (0.22)	ND (0.2)	---	---
Benzo (a) pyrene	µg/L	---	---	ND (0.22)	ND (0.2)	---	---
Benzo (b) fluoranthene	µg/L	---	---	ND (0.22)	ND (0.2)	---	---
Benzo (ghi) perylene	µg/L	---	---	ND (0.22)	ND (0.2)	---	---
Benzo (k) fluoranthene	µg/L	---	---	ND (0.22)	ND (0.2)	---	---
Chrysene	µg/L	---	---	ND (0.22)	ND (0.2)	---	---
Dibenzo (a,h) anthracene	µg/L	---	---	ND (0.22)	ND (0.2)	---	---

TABLE 5.2-1
HNWR-1 Analytical Results (November 2010 through January 2013)
Groundwater Remedy Operation and Maintenance Manual
Volume 2: Sampling and Monitoring Plan
PG&E Topock Compressor Station, Needles, California

Location:		HNWR-01	HNWR-01	HNWR-01	HNWR-01	HNWR-01	HNWR-01
Sample Date:		**11/10/2010**	**2/23/2012**	**3/14/2012**	**4/4/2012**	**6/27/2012**	**1/22/2013**
Parameter	**Units**						
Polyaromatic Hydrocarbons							
Fluoranthene	µg/L	---	---	ND (0.22)	ND (0.2)	---	---
Fluorene	µg/L	---	---	ND (0.22)	ND (0.2)	---	---
Indeno (1,2,3-cd) pyrene	µg/L	---	---	ND (0.22)	ND (0.2)	---	---
Naphthalene	µg/L	---	---	ND (0.22)	ND (0.2)	---	---
PAH High molecular weight	µg/L	---	---	ND (0.0)	ND (0.0)	---	---
PAH Low molecular weight	µg/L	---	---	ND (0.0)	ND (0.0)	---	---
Phenanthrene	µg/L	---	---	ND (0.22)	ND (0.2)	---	---
Pyrene	µg/L	---	---	ND (0.22)	ND (0.2)	---	---
Polychlorinated Biphenyls							
Aroclor 1016	µg/L	---	---	ND (0.53)	ND (0.52)	---	---
Aroclor 1221	µg/L	---	---	ND (1.1)	ND (1.0)	---	---
Aroclor 1232	µg/L	---	---	ND (0.53)	ND (0.52)	---	---
Aroclor 1242	µg/L	---	---	ND (0.53)	ND (0.52)	---	---
Aroclor 1248	µg/L	---	---	ND (0.53)	ND (0.52)	---	---
Aroclor 1254	µg/L	---	---	ND (0.53)	ND (0.52)	---	---
Aroclor 1260	µg/L	---	---	ND (0.53)	ND (0.52)	---	---
Radiochemistry							
Gross Alpha	pCi/L	---	---	---	---	---	---
Gross Beta	pCi/L	---	---	---	---	---	---
Total Petroleum Hydrocarbons							
Orthophosphate, dissolved	mg/L	---	---	---	---	---	---
TPH as diesel	µg/L	---	---	**190**	ND (51) J	---	---
TPH as gasoline	µg/L	---	---	ND (100)	ND (100)	---	---
TPH as motor oil	µg/L	---	---	ND (53)	ND (51)	---	---
Volatile Organic Compounds							
1,1,1,2-Tetrachloroethane	µg/L	---	---	ND (1.0)	ND (1.0)	---	---
1,1,1-Trichloroethane	µg/L	---	---	ND (1.0)	ND (1.0)	---	---
1,1,2,2-Tetrachloroethane	µg/L	---	---	ND (1.0)	ND (1.0)	---	---
1,1,2-Trichloroethane	µg/L	---	---	ND (1.0)	ND (1.0)	---	---
1,1,2-Trichlorotrifluoroethane (Freon 113)	µg/L	---	---	ND (1.0)	ND (1.0)	---	---
1,1-Dichloroethane	µg/L	---	---	ND (1.0)	ND (1.0)	---	---
1,1-Dichloroethene	µg/L	---	---	ND (1.0)	ND (1.0)	---	---
1,1-Dichloropropene	µg/L	---	---	ND (1.0)	ND (1.0)	---	---
1,2,3-Trichlorobenzene	µg/L	---	---	ND (1.0)	ND (1.0)	---	---
1,2,3-Trichloropropane	µg/L	---	---	ND (1.0)	ND (1.0)	---	---
1,2,4-Trichlorobenzene	µg/L	---	---	ND (1.0)	ND (1.0)	---	---

TABLE 5.2-1
HNWR-1 Analytical Results (November 2010 through January 2013)
Groundwater Remedy Operation and Maintenance Manual
Volume 2: Sampling and Monitoring Plan
PG&E Topock Compressor Station, Needles, California

Location:		HNWR-01	HNWR-01	HNWR-01	HNWR-01	HNWR-01	HNWR-01
Sample Date:		**11/10/2010**	**2/23/2012**	**3/14/2012**	**4/4/2012**	**6/27/2012**	**1/22/2013**
Parameter	**Units**						
Volatile Organic Compounds							
1,2,4-Trimethylbenzene	µg/L	---	---	ND (1.0)	ND (1.0) J	---	---
1,2-Dibromo-3-chloropropane	µg/L	---	---	ND (2.0)	ND (2.0)	---	---
1,2-Dibromoethane	µg/L	---	---	ND (1.0)	ND (1.0)	---	---
1,2-Dichlorobenzene	µg/L	---	---	ND (1.0)	ND (1.0)	---	---
1,2-Dichloroethane	µg/L	---	---	ND (1.0)	ND (1.0)	---	---
1,2-Dichloropropane	µg/L	---	---	ND (1.0)	ND (1.0)	---	---
1,3,5-Trimethylbenzene	µg/L	---	---	ND (1.0)	ND (1.0) J	---	---
1,3-Dichlorobenzene	µg/L	---	---	ND (1.0)	ND (1.0)	---	---
1,3-Dichloropropane	µg/L	---	---	ND (1.0)	ND (1.0)	---	---
1,4-Dichlorobenzene	µg/L	---	---	ND (1.0)	ND (1.0)	---	---
2,2-Dichloropropane	µg/L	---	---	ND (1.0)	ND (1.0)	---	---
2-Chlorotoluene	µg/L	---	---	ND (1.0)	ND (1.0)	---	---
4-Isopropyltoluene	µg/L	---	---	ND (1.0)	ND (1.0)	---	---
Acetone	µg/L	---	---	ND (10)	ND (10)	---	---
Acrolein	µg/L	---	---	ND (20)	ND (20)	---	---
Acrylonitrile	µg/L	---	---	ND (20)	ND (20)	---	---
Benzene	µg/L	---	---	ND (1.0)	ND (1.0)	---	---
Bromobenzene	µg/L	---	---	ND (1.0)	ND (1.0)	---	---
Bromochloromethane	µg/L	---	---	ND (1.0)	ND (1.0)	---	---
Bromodichloromethane	µg/L	---	---	ND (1.0)	ND (1.0)	---	---
Bromoform	µg/L	---	---	ND (1.0)	ND (1.0)	---	---
Bromomethane	µg/L	---	---	ND (1.0)	ND (1.0)	---	---
Carbon disulfide	µg/L	---	---	ND (1.0)	ND (1.0)	---	---
Carbon tetrachloride	µg/L	---	---	ND (1.0)	ND (1.0)	---	---
Chloro methane	µg/L	---	---	ND (1.0)	ND (1.0)	---	---
Chlorobenzene	µg/L	---	---	ND (1.0)	ND (1.0)	---	---
Chloroethane	µg/L	---	---	ND (1.0)	ND (1.0)	---	---
Chloroform	µg/L	---	---	ND (1.0)	ND (1.0)	---	---
cis-1,2-Dichloroethene	µg/L	---	---	ND (1.0)	ND (1.0)	---	---
cis-1,3-Dichloropropene	µg/L	---	---	ND (1.0)	ND (1.0)	---	---
Dibromochloromethane	µg/L	---	---	ND (1.0)	ND (1.0)	---	---
Dibromomethane	µg/L	---	---	ND (1.0)	ND (1.0)	---	---
Dichlorodifluoromethane	µg/L	---	---	ND (1.0)	ND (1.0)	---	---
Ethyl- benzene	µg/L	---	---	ND (1.0)	ND (1.0)	---	---
Hexachlorobutadiene	µg/L	---	---	ND (1.0)	ND (1.0)	---	---
Isopropylbenzene	µg/L	---	---	ND (1.0)	ND (1.0)	---	---
Methyl ethyl ketone	µg/L	---	---	ND (10)	ND (10)	---	---

TABLE 5.2-1

HNWR-1 Analytical Results (November 2010 through January 2013)

Groundwater Remedy Operation and Maintenance Manual

Volume 2: Sampling and Monitoring Plan

PG&E Topock Compressor Station, Needles, California

	Location:	HNWR-01	HNWR-01	HNWR-01	HNWR-01	HNWR-01	HNWR-01
	Sample Date:	**11/10/2010**	**2/23/2012**	**3/14/2012**	**4/4/2012**	**6/27/2012**	**1/22/2013**
Parameter	**Units**						
Volatile Organic Compounds							
Methyl isobutyl ketone	µg/L	---	---	ND (10)	ND (10)	---	---
Methyl tert-butyl ether (MTBE)	µg/L	---	---	ND (1.0)	ND (1.0) J	---	---
Methylene chloride	µg/L	---	---	ND (5.0)	ND (5.0)	---	---
N-Butylbenzene	µg/L	---	---	ND (1.0)	ND (1.0)	---	---
N-Propylbenzene	µg/L	---	---	ND (1.0)	ND (1.0)	---	---
p-Chlorotoluene	µg/L	---	---	ND (1.0)	ND (1.0)	---	---
sec-Butylbenzene	µg/L	---	---	ND (1.0)	ND (1.0)	---	---
Styrene	µg/L	---	---	ND (1.0)	ND (1.0) J	---	---
tert-Butylbenzene	µg/L	---	---	ND (1.0)	ND (1.0)	---	---
Tetrachloroethene	µg/L	---	---	ND (1.0)	ND (1.0)	---	---
Toluene	µg/L	---	---	ND (2.5)	ND (2.5)	---	---
trans-1,2-Dichloroethene	µg/L	---	---	ND (1.0)	ND (1.0)	---	---
trans-1,3-Dichloropropene	µg/L	---	---	ND (1.0)	ND (1.0)	---	---
Trichloroethene	µg/L	---	---	ND (1.0)	ND (1.0)	---	---
Trichlorofluoromethane (Freon 11)	µg/L	---	---	ND (1.0)	ND (1.0)	---	---
Vinyl chloride	µg/L	---	---	ND (1.0)	ND (1.0)	---	---
Xylene, m,p-	µg/L	---	---	ND (1.0)	ND (1.0)	---	---
Xylene, o-	µg/L	---	---	ND (1.0)	ND (1.0)	---	---
Xylenes, total	µg/L	---	---	ND (2.0)	ND (2.0)	---	---

Notes:

---	not collected or not available.
%	percent
0/00	differences from global standards in ppt.
°C	degrees Celcius.
J	analyte was present, but reported value was estimated.
mg/L	milligrams per liter.
mV	millivolts.
ND	parameter not detected at the listed reporting limit.
NTU	nephelometric turbidity units.
µg/L	micrograms per liter.
µS/cm	microSiemens per centimeter.

TABLE 5.2-2

HNWR-1 Analytical Results (October 2013 through February 2014)

Groundwater Remedy Operation and Maintenance Manual

Volume 2: Sampling and Monitoring Plan

PG&E Topock Compressor Station, Needles, California

Location:	HNWR-01	HNWR-01	HNWR-01	HNWR-01	HNWR-01	HNWR-01	HNWR-01
Sample Date:	**10/22/2013**	**2/11/2014**	**2/12/2014**	**2/12/2014**	**2/12/2014**	**2/13/2014**	**2/14/2014**
Time (hours):	**--**	**1**	**6**	**12**	**24**	**48**	**72**
Parameter	**Units**						
Anions							
Bromide	mg/L	ND (0.5)	ND (0.5)	---	---	---	---	ND (0.5)
Chloride	mg/L	**140**	**140**	---	---	---	---	140
Fluoride	mg/L	**3.90**	**4.00**	**4.00**	**4.00**	**4.00**	**3.80**	3.90
Nitrate (as nitrogen)	mg/L	**2.50**	**2.60**	**2.70**	**2.70**	**2.70**	**2.50**	2.50
Nitrite as Nitrogen	mg/L	ND (2.5)	ND (1.0)	---	---	---	---	ND (1.0)
Sulfate	mg/L	**45.0**	**45.0**	---	---	---	---	51.0
General Chemistry							
Deuterium	0/00	---	**-73.6**	**-73.4**	**-73.4**	**-73.4**	**-74.3**	-72.5
Oxygen 18	0/00	---	**-10.1**	**-10.4**	**-10.4**	**-10.4**	**-10.5**	-10.4
pH	pH units	---	**7.90 J**	---	---	---	---	7.70 J
Total organic carbon	mg/L	---	ND (1.0)	---	---	---	---	ND (1.0)
Herbicides							
2,4,5-T	µg/L	---	ND (0.012)	---	---	---	---	ND (0.012)
2,4,5-TP (Silvex)	µg/L	---	ND (0.016)	---	---	---	---	ND (0.016)
2,4-D	µg/L	---	ND (0.065)	---	---	---	---	ND (0.065)
2,4-DB	µg/L	---	ND (0.32)	---	---	---	---	ND (0.32)
Dalapon	µg/L	---	ND (2.4) J	---	---	---	---	ND (2.4) J
Dicamba	µg/L	---	ND (0.037)	---	---	---	---	ND (0.037)
Dichlorprop	µg/L	---	ND (0.012)	---	---	---	---	ND (0.012)
Dinoseb	µg/L	---	ND (0.04)	---	---	---	---	ND (0.04)
MCPA	µg/L	---	ND (0.29) J	---	---	---	---	ND (0.29) J
MCPP	µg/L	---	ND (0.3) J	---	---	---	---	ND (0.3) J
Metals							
Antimony, dissolved	µg/L	ND (0.5)	ND (0.5)	ND (0.5)	ND (0.5)	ND (0.5)	ND (0.5)	ND (0.5)
Arsenic, dissolved	µg/L	**14.0**	**16.0**	**16.0**	**16.0**	**16.0**	**15.0**	14.0
Barium, dissolved	µg/L	**110**	**120**	**120**	**120**	**120**	**130**	120
Beryllium, dissolved	µg/L	ND (1.0)	ND (0.5)	ND (0.5)	ND (0.5)	ND (0.5)	ND (0.5)	ND (0.5)
Cadmium, dissolved	µg/L	ND (3.0)	ND (0.5)	ND (0.5)	ND (0.5)	ND (0.5)	ND (0.5)	ND (0.5)
Calcium, dissolved	µg/L	---	**19,000**	---	---	---	---	23,000
Chromium, Hexavalent	µg/L	**20.0**	**20.0**	**20.0**	**20.0**	**20.0**	**19.0**	19.0
Chromium, total dissolved	µg/L	**17.0**	**18.0**	**19.0**	**19.0**	**19.0**	**17.0**	16.0
Cobalt, dissolved	µg/L	ND (3.0)	ND (0.5)	ND (0.5)	ND (0.5)	ND (0.5)	ND (0.5)	ND (0.5)
Copper, dissolved	µg/L	ND (5.0)	ND (1.0)	ND (1.0)	ND (1.0)	ND (1.0)	ND (1.0)	ND (1.0)
Iron, dissolved	µg/L	---	ND (20)	---	---	---	---	ND (20)
Lead, dissolved	µg/L	ND (10)	ND (1.0)	ND (1.0)	ND (1.0)	ND (1.0)	ND (1.0)	ND (1.0)
Magnesium, dissolved	µg/L	---	**3,200**	---	---	---	---	4,200

TABLE 5.2-2

HNWR-1 Analytical Results (October 2013 through February 2014)

Groundwater Remedy Operation and Maintenance Manual

Volume 2: Sampling and Monitoring Plan

PG&E Topock Compressor Station, Needles, California

Location:	HNWR-01	HNWR-01	HNWR-01	HNWR-01	HNWR-01	HNWR-01	HNWR-01
Sample Date:	**10/22/2013**	**2/11/2014**	**2/12/2014**	**2/12/2014**	**2/12/2014**	**2/13/2014**	**2/14/2014**
Time (hours):	**--**	**1**	**6**	**12**	**24**	**48**	**72**
Parameter / **Units**							
Metals							
Manganese, dissolved µg/L	---	ND (0.5)	---	---	---	---	ND (0.5)
Mercury, dissolved µg/L	ND (0.2)	ND (0.2)	ND (0.2)	ND (0.2)	ND (0.2)	ND (0.2)	ND (0.2)
Molybdenum, dissolved µg/L	**9.10**	**9.00**	**9.40**	**9.40**	**9.40**	**9.20**	8.90
Nickel, dissolved µg/L	ND (5.0)	ND (1.0)	ND (1.0)	ND (1.0)	ND (1.0)	ND (1.0)	ND (1.0)
Potassium, dissolved µg/L	---	**4,100**	---	---	---	---	4,600
Selenium, dissolved µg/L	**0.68**	**0.79**	**0.77**	**0.77**	**0.77**	**0.76**	0.75
Silver, dissolved µg/L	ND (3.0)	ND (0.5)	ND (0.5)	ND (0.5)	ND (0.5)	ND (0.5)	ND (0.5)
Sodium, dissolved µg/L	---	**130,000**	---	---	---	---	140,000
Soluble silica mg/L	**27.0**	**24.0**	**25.0 J**	**25.0 J**	**25.0 J**	**25.0**	27.0
Thallium, dissolved µg/L	ND (0.5)	ND (0.5)	ND (0.5)	ND (0.5)	ND (0.5)	ND (0.5)	ND (0.5)
Vanadium, dissolved µg/L	**20.0**	**18.0**	**19.0**	**19.0**	**19.0**	**17.0**	16.0
Zinc, dissolved µg/L	**12.0**	ND (10)	ND (10)	ND (10)	ND (10)	ND (10)	ND (10)
Perchlorate							
Perchlorate µg/L	---	ND (2.0)	---	---	---	---	ND (2.0)
Pesticides							
4,4-DDD µg/L	---	ND (0.05)	---	---	---	---	ND (0.052)
4,4-DDE µg/L	---	ND (0.05)	---	---	---	---	ND (0.052)
4,4-DDT µg/L	---	ND (0.05)	---	---	---	---	ND (0.052)
Aldrin µg/L	---	ND (0.025)	---	---	---	---	ND (0.026)
alpha-BHC µg/L	---	ND (0.025)	---	---	---	---	ND (0.026)
alpha-Chlordane µg/L	---	ND (0.025)	---	---	---	---	ND (0.026)
beta-BHC µg/L	---	ND (0.025)	---	---	---	---	ND (0.026)
delta-BHC µg/L	---	ND (0.025)	---	---	---	---	ND (0.026)
Dieldrin µg/L	---	ND (0.05)	---	---	---	---	ND (0.052)
Endo sulfan I µg/L	---	ND (0.025)	---	---	---	---	ND (0.026)
Endo sulfan II µg/L	---	ND (0.05)	---	---	---	---	ND (0.052)
Endosulfan sulfate µg/L	---	ND (0.05)	---	---	---	---	ND (0.052)
Endrin µg/L	---	ND (0.05)	---	---	---	---	ND (0.052)
Endrin aldehyde µg/L	---	ND (0.05)	---	---	---	---	ND (0.052)
gamma-BHC µg/L	---	ND (0.025)	---	---	---	---	ND (0.026)
gamma-Chlordane µg/L	---	ND (0.025)	---	---	---	---	ND (0.026)
Heptachlor µg/L	---	ND (0.025)	---	---	---	---	ND (0.026)
Heptachlor Epoxide µg/L	---	ND (0.025)	---	---	---	---	ND (0.026)
Methoxy chlor µg/L	---	ND (0.25)	---	---	---	---	ND (0.26)
Toxaphene µg/L	---	ND (2.5)	---	---	---	---	ND (2.6)

TABLE 5.2-2

HNWR-1 Analytical Results (October 2013 through February 2014)

Groundwater Remedy Operation and Maintenance Manual

Volume 2: Sampling and Monitoring Plan

PG&E Topock Compressor Station, Needles, California

Location:	HNWR-01	HNWR-01	HNWR-01	HNWR-01	HNWR-01	HNWR-01	HNWR-01
Sample Date:	10/22/2013	2/11/2014	2/12/2014	2/12/2014	2/12/2014	2/13/2014	2/14/2014
Time (hours):	--	1	6	12	24	48	72
Parameter / **Units**							
Polyaromatic Hydrocarbons							
1-Methyl naphthalene µg/L	---	ND (0.2)	---	---	---	---	ND (0.21)
2-Methyl naphthalene µg/L	---	ND (0.2)	---	---	---	---	ND (0.21)
Acenaphthene µg/L	---	ND (0.2)	---	---	---	---	ND (0.21)
Acenaphthylene µg/L	---	ND (0.2)	---	---	---	---	ND (0.21)
Anthracene µg/L	---	ND (0.2)	---	---	---	---	ND (0.21)
Benzo (a) anthracene µg/L	---	ND (0.2)	---	---	---	---	ND (0.21)
Benzo (a) pyrene µg/L	---	ND (0.2)	---	---	---	---	ND (0.21)
Benzo (b) fluoranthene µg/L	---	ND (0.2)	---	---	---	---	ND (0.21)
Benzo (ghi) perylene µg/L	---	ND (0.2)	---	---	---	---	ND (0.21)
Benzo (k) fluoranthene µg/L	---	ND (0.2)	---	---	---	---	ND (0.21)
Chrysene µg/L	---	ND (0.2)	---	---	---	---	ND (0.21)
Dibenzo (a,h) anthracene µg/L	---	ND (0.2)	---	---	---	---	ND (0.21)
Fluoranthene µg/L	---	ND (0.2)	---	---	---	---	ND (0.21)
Fluorene µg/L	---	ND (0.2)	---	---	---	---	ND (0.21)
Indeno (1,2,3-cd) pyrene µg/L	---	ND (0.2)	---	---	---	---	ND (0.21)
Naphthalene µg/L	---	ND (0.2)	---	---	---	---	ND (0.21)
Phenanthrene µg/L	---	ND (0.2)	---	---	---	---	ND (0.21)
Pyrene µg/L	---	ND (0.2)	---	---	---	---	ND (0.21)
Polychlorinated Biphenyls							
Aroclor 1016 µg/L	---	ND (0.5)	---	---	---	---	ND (0.52)
Aroclor 1221 µg/L	---	ND (1.0)	---	---	---	---	ND (1.0)
Aroclor 1232 µg/L	---	ND (0.5)	---	---	---	---	ND (0.52)
Aroclor 1242 µg/L	---	ND (0.5)	---	---	---	---	ND (0.52)
Aroclor 1248 µg/L	---	ND (0.5)	---	---	---	---	ND (0.52)
Aroclor 1254 µg/L	---	ND (0.5)	---	---	---	---	ND (0.52)
Aroclor 1260 µg/L	---	ND (0.5)	---	---	---	---	ND (0.52)
Radiochemistry							
Gross Alpha pCi/L	---	**7.42**	---	---	---	---	6.34 J
Gross Beta pCi/L	---	ND (4.0)	---	---	---	---	ND (4.0)
Total Petroleum Hydrocarbons							
Orthophosphate, dissolved mg/L	---	ND (0.02)	---	---	---	---	ND (0.02)
TPH as diesel µg/L	---	ND (50)	---	---	---	---	ND (50)
TPH as gasoline µg/L	---	ND (100)	---	---	---	---	ND (100)
TPH as motor oil µg/L	---	ND (50)	---	---	---	---	ND (50)

Notes:

---	not collected or not available.
0/00	differences from global standards in ppt.
J	analyte was present, but reported value was estimated.
mg/L	milligrams per liter.
ND	parameter not detected at the listed reporting limit.
NTU	nephelometric turbidity units.
pCi/L	picocurries per liter.
µg/L	micrograms per liter.

TABLE 5.2-3
HNWR-1A Analytical Results (June 2014)
Groundwater Remedy Operation and Maintenance Manual
Volume 2: Sampling and Monitoring Plan
PG&E Topock Compressor Station, Needles, California

	Location:	HNWR-01A	HNWR-01A	HNWR-01A	HNWR-01A	HNWR-01A	HNWR-01A
	Sample Date:	6/24/2014	6/24/2014	6/24/2014	6/24/2014	6/24/2014	6/24/2014
	Flow Rate (gpm):	500	700	900	1100	1300	1500
Parameter	**Units**						
Anions							
Bromide	mg/L	---	---	ND (0.5)	---	---	---
Chloride	mg/L	---	---	**180**	---	---	---
Fluoride	mg/L	---	---	**3.90**	---	---	---
Nitrate (as nitrogen)	mg/L	---	---	**2.60**	---	---	---
Nitrite as Nitrogen	mg/L	---	---	ND (1.0)	---	---	---
Orthophosphate, dissolved	mg/L	---	---	ND (0.02)	---	---	---
Sulfate	mg/L	---	---	**56.0**	---	---	---
General Chemistry							
Deuterium	0/00	---	---	**-73.1**	---	---	---
Oxygen 18	0/00	---	---	**-10.1**	---	---	---
pH	pH units	---	---	**7.70 J**	---	---	---
Total organic carbon	mg/L	---	---	ND (1.0)	---	---	---
Herbicides							
2,4,5-T	µg/L	---	---	ND (0.09) J	---	---	---
2,4,5-TP (Silvex)	µg/L	---	---	ND (0.07) J	---	---	---
2,4-D	µg/L	---	---	ND (0.4) J	---	---	---
2,4-DB	µg/L	---	---	ND (3.0) J	---	---	---
Dalapon	µg/L	---	---	ND (10) J	---	---	---
Dicamba	µg/L	---	---	ND (0.08) J	---	---	---
Dichlorprop	µg/L	---	---	ND (0.5) J	---	---	---
Dinoseb	µg/L	---	---	ND (0.2) J	---	---	---
MCPA	µg/L	---	---	ND (10) J	---	---	---
MCPP	µg/L	---	---	ND (10) J	---	---	---
Metals							
Antimony, dissolved	µg/L	ND (0.5)	ND (0.5)	ND (0.5)	ND (0.5)	ND (0.5)	ND (0.5)
Arsenic, dissolved	µg/L	**12.0**	**12.0**	**12.0**	**12.0**	**13.0**	**12.0**
Barium, dissolved	µg/L	**110**	**110**	**110**	**110**	**110**	**110**
Beryllium, dissolved	µg/L	ND (0.5)	ND (0.5)	ND (0.5)	ND (0.5)	ND (0.5)	ND (0.5)
Cadmium, dissolved	µg/L	ND (0.5)	ND (0.5)	ND (0.5)	ND (0.5)	ND (0.5)	ND (0.5)
Chromium, Hexavalent	µg/L	**17.0**	**17.0**	**17.0**	**17.0**	**17.0**	**18.0**
Chromium, total dissolved	µg/L	**16.0**	**15.0**	**16.0**	**16.0**	**16.0**	**16.0**
Cobalt, dissolved	µg/L	ND (0.5)	ND (0.5)	ND (0.5)	ND (0.5)	ND (0.5)	ND (0.5)
Copper, dissolved	µg/L	ND (1.0)	ND (1.0)	ND (1.0)	ND (1.0)	ND (1.0)	ND (1.0)
Lead, dissolved	µg/L	ND (1.0)	ND (1.0)	ND (1.0)	ND (1.0)	ND (1.0)	ND (1.0)
Mercury, dissolved	µg/L	ND (0.2)	ND (0.2)	ND (0.2)	ND (0.2)	ND (0.2)	ND (0.2)
Molybdenum, dissolved	µg/L	**9.80**	**9.30**	**9.50**	**9.50**	**9.70**	**9.50**

TABLE 5.2-3
HNWR-1A Analytical Results (June 2014)
Groundwater Remedy Operation and Maintenance Manual
Volume 2: Sampling and Monitoring Plan
PG&E Topock Compressor Station, Needles, California

	Location:	HNWR-01A	HNWR-01A	HNWR-01A	HNWR-01A	HNWR-01A	HNWR-01A
	Sample Date:	6/24/2014	6/24/2014	6/24/2014	6/24/2014	6/24/2014	6/24/2014
	Flow Rate (gpm):	500	700	900	1100	1300	1500
Parameter	**Units**						
Metals							
Nickel, dissolved	µg/L	ND (1.0)	ND (1.0)	ND (1.0)	ND (1.0)	ND (1.0)	ND (1.0)
Selenium, dissolved	µg/L	**0.97**	**0.88**	**1.00**	**0.95**	**0.99**	**0.98**
Silver, dissolved	µg/L	ND (0.5)	ND (0.5)	ND (0.5)	ND (0.5)	ND (0.5)	ND (0.5)
Soluble silica	mg/L	**24.0**	**24.0**	**29.0 J**	**24.0**	**24.0**	**24.0**
Thallium, dissolved	µg/L	ND (0.5)	ND (0.5)	ND (0.5)	ND (0.5)	ND (0.5)	ND (0.5)
Vanadium, dissolved	µg/L	**18.0**	**17.0**	**18.0**	**18.0**	**18.0**	**18.0**
Zinc, dissolved	µg/L	**30.0**	**22.0**	**19.0**	**16.0**	**14.0**	**16.0**
Perchlorate							
Perchlorate	µg/L	---	---	ND (2.0)	---	---	---
Pesticides							
4,4-DDD	µg/L	---	---	ND (0.051)	---	---	---
4,4-DDE	µg/L	---	---	ND (0.051)	---	---	---
4,4-DDT	µg/L	---	---	ND (0.051)	---	---	---
Aldrin	µg/L	---	---	ND (0.026)	---	---	---
alpha-BHC	µg/L	---	---	ND (0.026)	---	---	---
alpha-Chlordane	µg/L	---	---	ND (0.026)	---	---	---
beta-BHC	µg/L	---	---	ND (0.026)	---	---	---
delta-BHC	µg/L	---	---	ND (0.026)	---	---	---
Dieldrin	µg/L	---	---	ND (0.051)	---	---	---
Endo sulfan I	µg/L	---	---	ND (0.026)	---	---	---
Endo sulfan II	µg/L	---	---	ND (0.051)	---	---	---
Endosulfan sulfate	µg/L	---	---	ND (0.051)	---	---	---
Endrin	µg/L	---	---	ND (0.051)	---	---	---
Endrin aldehyde	µg/L	---	---	ND (0.051)	---	---	---
gamma-BHC	µg/L	---	---	ND (0.026)	---	---	---
gamma-Chlordane	µg/L	---	---	ND (0.026)	---	---	---
Heptachlor	µg/L	---	---	ND (0.026)	---	---	---
Heptachlor Epoxide	µg/L	---	---	ND (0.026)	---	---	---
Methoxy chlor	µg/L	---	---	ND (0.26)	---	---	---
Toxaphene	µg/L	---	---	ND (2.6)	---	---	---
Polychlorinated Biphenyls							
Aroclor 1016	µg/L	---	---	ND (0.51)	---	---	---
Aroclor 1221	µg/L	---	---	ND (1.0)	---	---	---
Aroclor 1232	µg/L	---	---	ND (0.51)	---	---	---
Aroclor 1242	µg/L	---	---	ND (0.51)	---	---	---
Aroclor 1248	µg/L	---	---	ND (0.51)	---	---	---

TABLE 5.2-3
HNWR-1A Analytical Results (June 2014)
Groundwater Remedy Operation and Maintenance Manual
Volume 2: Sampling and Monitoring Plan
PG&E Topock Compressor Station, Needles, California

	Location:	HNWR-01A	HNWR-01A	HNWR-01A	HNWR-01A	HNWR-01A	HNWR-01A
	Sample Date:	6/24/2014	6/24/2014	6/24/2014	6/24/2014	6/24/2014	6/24/2014
	Flow Rate (gpm):	500	700	900	1100	1300	1500
Parameter	**Units**						
Polychlorinated Biphenyls							
Aroclor 1254	µg/L	---	---	ND (0.51)	---	---	---
Aroclor 1260	µg/L	---	---	ND (0.51)	---	---	---
Radiochemistry							
Gross Alpha	pCi/L	---	---	**4.57**	---	---	---
Gross Beta	pCi/L	---	---	**5.52**	---	---	---
Semivolatile Organic Compounds							
2,4,5-Trichlorophenol	µg/L	---	---	ND (10)	---	---	---
2,4,6-Trichlorophenol	µg/L	---	---	ND (10)	---	---	---
2,4-Dichlorophenol	µg/L	---	---	ND (10)	---	---	---
2,4-Dimethylphenol	µg/L	---	---	ND (10) J	---	---	---
2,4-Dinitrophenol	µg/L	---	---	ND (52)	---	---	---
2,4-Dinitrotoluene	µg/L	---	---	ND (10)	---	---	---
2,6-Dinitrotoluene	µg/L	---	---	ND (10)	---	---	---
2-Chloro naphthalene	µg/L	---	---	ND (10)	---	---	---
2-Chlorophenol	µg/L	---	---	ND (10) J	---	---	---
2-Methyl naphthalene	µg/L	---	---	ND (10) J	---	---	---
2-Methylphenol	µg/L	---	---	ND (10) J	---	---	---
2-Nitroaniline	µg/L	---	---	ND (52)	---	---	---
2-Nitrophenol	µg/L	---	---	ND (10) J	---	---	---
3,3-Dichlorobenzidene	µg/L	---	---	ND (21)	---	---	---
3-Nitroaniline	µg/L	---	---	ND (52)	---	---	---
4,6-Dinitro-2-methylphenol	µg/L	---	---	ND (52)	---	---	---
4-Bromophenyl phenyl ether	µg/L	---	---	ND (10)	---	---	---
4-Chloro-3-methylphenol	µg/L	---	---	ND (52)	---	---	---
4-Chloroaniline	µg/L	---	---	ND (21) J	---	---	---
4-Chlorophenyl phenyl ether	µg/L	---	---	ND (10)	---	---	---
4-Methylphenol	µg/L	---	---	ND (10) J	---	---	---
4-Nitroaniline	µg/L	---	---	ND (21)	---	---	---
4-Nitrophenol	µg/L	---	---	ND (52)	---	---	---
Acenaphthene	µg/L	---	---	ND (10)	---	---	---
Acenaphthylene	µg/L	---	---	ND (10)	---	---	---
Anthracene	µg/L	---	---	ND (10)	---	---	---
Benzo (a) anthracene	µg/L	---	---	ND (10)	---	---	---
Benzo (a) pyrene	µg/L	---	---	ND (10)	---	---	---
Benzo (b) fluoranthene	µg/L	---	---	ND (10)	---	---	---
Benzo (ghi) perylene	µg/L	---	---	ND (10)	---	---	---

TABLE 5.2-3
HNWR-1A Analytical Results (June 2014)
Groundwater Remedy Operation and Maintenance Manual
Volume 2: Sampling and Monitoring Plan
PG&E Topock Compressor Station, Needles, California

	Location:	HNWR-01A	HNWR-01A	HNWR-01A	HNWR-01A	HNWR-01A	HNWR-01A
	Sample Date:	6/24/2014	6/24/2014	6/24/2014	6/24/2014	6/24/2014	6/24/2014
	Flow Rate (gpm):	500	700	900	1100	1300	1500
Parameter	**Units**						
Semivolatile Organic Compounds							
Benzo (k) fluoranthene	µg/L	---	---	ND (10)	---	---	---
Benzoic acid	µg/L	---	---	ND (52)	---	---	---
Benzyl alcohol	µg/L	---	---	ND (21) J	---	---	---
bis (2-chloroethoxy) methane	µg/L	---	---	ND (10) J	---	---	---
bis (2-chloroethyl) ether	µg/L	---	---	ND (10) J	---	---	---
bis (2-chloroisopropyl) ether	µg/L	---	---	ND (10) J	---	---	---
bis (2-ethylhexyl) phthalate	µg/L	---	---	ND (10)	---	---	---
Butylbenzylphthalate	µg/L	---	---	ND (10)	---	---	---
Chrysene	µg/L	---	---	ND (10)	---	---	---
Dibenzo (a,h) anthracene	µg/L	---	---	ND (10)	---	---	---
Dibenzofuran	µg/L	---	---	ND (10)	---	---	---
Diethyl phthalate	µg/L	---	---	ND (10)	---	---	---
Dimethyl phthalate	µg/L	---	---	ND (10)	---	---	---
Di-n-butyl phthalate	µg/L	---	---	ND (10)	---	---	---
Di-n-octyl phthalate	µg/L	---	---	ND (10)	---	---	---
Fluoranthene	µg/L	---	---	ND (10)	---	---	---
Fluorene	µg/L	---	---	ND (10)	---	---	---
Hexachlorobenzene	µg/L	---	---	ND (10)	---	---	---
Hexachloroethane	µg/L	---	---	ND (10)	---	---	---
Indeno (1,2,3-cd) pyrene	µg/L	---	---	ND (10)	---	---	---
Isophorone	µg/L	---	---	ND (10)	---	---	---
Nitrobenzene	µg/L	---	---	ND (10) J	---	---	---
n-Nitroso-di-n-propylamine	µg/L	---	---	ND (10) J	---	---	---
N-nitrosodiphenylamine	µg/L	---	---	ND (10)	---	---	---
Pentachlorophenol	µg/L	---	---	ND (52)	---	---	---
Phenanthrene	µg/L	---	---	ND (10)	---	---	---
Phenol	µg/L	---	---	ND (10) J	---	---	---
Pyrene	µg/L	---	---	ND (10)	---	---	---
Total Petroleum Hydrocarbons							
TPH as diesel	µg/L	---	---	ND (52)	---	---	---
TPH as gasoline	µg/L	---	---	ND (100)	---	---	---
TPH as motor oil	µg/L	---	---	ND (52)	---	---	---
Volatile Organic Compounds							
1,1,1,2-Tetrachloroethane	µg/L	---	---	ND (1.0)	---	---	---
1,1,1-Trichloroethane	µg/L	---	---	ND (1.0)	---	---	---
1,1,2,2-Tetrachloroethane	µg/L	---	---	ND (1.0)	---	---	---

TABLE 5.2-3
HNWR-1A Analytical Results (June 2014)
Groundwater Remedy Operation and Maintenance Manual
Volume 2: Sampling and Monitoring Plan
PG&E Topock Compressor Station, Needles, California

Location:	HNWR-01A	HNWR-01A	HNWR-01A	HNWR-01A	HNWR-01A	HNWR-01A
Sample Date:	6/24/2014	6/24/2014	6/24/2014	6/24/2014	6/24/2014	6/24/2014
Flow Rate (gpm):	500	700	900	1100	1300	1500
Parameter **Units**						
Volatile Organic Compounds						
1,1,2-Trichloroethane µg/L	---	---	ND (1.0)	---	---	---
1,1,2-Trichlorotrifluoroethane (Freon 113) µg/L	---	---	ND (1.0)	---	---	---
1,1-Dichloroethane µg/L	---	---	ND (1.0)	---	---	---
1,1-Dichloroethene µg/L	---	---	ND (1.0)	---	---	---
1,1-Dichloropropene µg/L	---	---	ND (1.0)	---	---	---
1,2,3-Trichlorobenzene µg/L	---	---	ND (1.0)	---	---	---
1,2,3-Trichloropropane µg/L	---	---	ND (1.0)	---	---	---
1,2,4-Trichlorobenzene µg/L	---	---	ND (1.0)	---	---	---
1,2,4-Trimethylbenzene µg/L	---	---	ND (1.0)	---	---	---
1,2-Dibromo-3-chloropropane µg/L	---	---	ND (2.0)	---	---	---
1,2-Dibromoethane µg/L	---	---	ND (1.0)	---	---	---
1,2-Dichlorobenzene µg/L	---	---	ND (1.0)	---	---	---
1,2-Dichloroethane µg/L	---	---	ND (1.0)	---	---	---
1,2-Dichloropropane µg/L	---	---	ND (1.0)	---	---	---
1,3,5-Trimethylbenzene µg/L	---	---	ND (1.0)	---	---	---
1,3-Dichlorobenzene µg/L	---	---	ND (1.0)	---	---	---
1,3-Dichloropropane µg/L	---	---	ND (1.0)	---	---	---
1,4-Dichlorobenzene µg/L	---	---	ND (1.0)	---	---	---
2,2-Dichloropropane µg/L	---	---	ND (1.0)	---	---	---
2-Chlorotoluene µg/L	---	---	ND (1.0)	---	---	---
4-Isopropyltoluene µg/L	---	---	ND (1.0)	---	---	---
Acetone µg/L	---	---	ND (10)	---	---	---
Acrolein µg/L	---	---	ND (20)	---	---	---
Acrylonitrile µg/L	---	---	ND (20)	---	---	---
Benzene µg/L	---	---	ND (1.0)	---	---	---
Bromobenzene µg/L	---	---	ND (1.0)	---	---	---
Bromochloromethane µg/L	---	---	ND (1.0)	---	---	---
Bromodichloromethane µg/L	---	---	ND (1.0)	---	---	---
Bromoform µg/L	---	---	ND (1.0)	---	---	---
Bromomethane µg/L	---	---	ND (1.0)	---	---	---
Carbon disulfide µg/L	---	---	ND (1.0)	---	---	---
Carbon tetrachloride µg/L	---	---	ND (0.5)	---	---	---
Chloro methane µg/L	---	---	ND (1.0)	---	---	---
Chlorobenzene µg/L	---	---	ND (1.0)	---	---	---
Chloroethane µg/L	---	---	ND (1.0)	---	---	---
Chloroform µg/L	---	---	ND (1.0)	---	---	---
cis-1,2-Dichloroethene µg/L	---	---	ND (1.0)	---	---	---

TABLE 5.2-3
HNWR-1A Analytical Results (June 2014)
Groundwater Remedy Operation and Maintenance Manual
Volume 2: Sampling and Monitoring Plan
PG&E Topock Compressor Station, Needles, California

Location:		HNWR-01A	HNWR-01A	HNWR-01A	HNWR-01A	HNWR-01A	HNWR-01A
Sample Date:		6/24/2014	6/24/2014	6/24/2014	6/24/2014	6/24/2014	6/24/2014
Flow Rate (gpm):		500	700	900	1100	1300	1500
Parameter	**Units**						
Volatile Organic Compounds							
cis-1,3-Dichloropropene	µg/L	---	---	ND (1.0)	---	---	---
Dibromochloromethane	µg/L	---	---	ND (1.0)	---	---	---
Dibromomethane	µg/L	---	---	ND (1.0)	---	---	---
Dichlorodifluoromethane	µg/L	---	---	ND (1.0)	---	---	---
Ethyl- benzene	µg/L	---	---	ND (1.0)	---	---	---
Hexachlorobutadiene	µg/L	---	---	ND (1.0)	---	---	---
Isopropylbenzene	µg/L	---	---	ND (1.0)	---	---	---
Methyl ethyl ketone	µg/L	---	---	ND (10)	---	---	---
Methyl isobutyl ketone	µg/L	---	---	ND (10)	---	---	---
Methyl tert-butyl ether (MTBE)	µg/L	---	---	ND (1.0)	---	---	---
Methylene chloride	µg/L	---	---	ND (5.0)	---	---	---
Naphthalene	µg/L	---	---	ND (1.0)	---	---	---
N-Butylbenzene	µg/L	---	---	ND (1.0)	---	---	---
N-Propylbenzene	µg/L	---	---	ND (1.0)	---	---	---
p-Chlorotoluene	µg/L	---	---	ND (1.0)	---	---	---
sec-Butylbenzene	µg/L	---	---	ND (1.0)	---	---	---
Styrene	µg/L	---	---	ND (1.0)	---	---	---
tert-Butylbenzene	µg/L	---	---	ND (1.0)	---	---	---
Tetrachloroethene	µg/L	---	---	ND (1.0)	---	---	---
Toluene	µg/L	---	---	ND (2.5)	---	---	---
trans-1,2-Dichloroethene	µg/L	---	---	ND (1.0)	---	---	---
trans-1,3-Dichloropropene	µg/L	---	---	ND (1.0)	---	---	---
Trichloroethene	µg/L	---	---	ND (1.0)	---	---	---
Trichlorofluoromethane (Freon 11)	µg/L	---	---	ND (1.0)	---	---	---
Vinyl chloride	µg/L	---	---	ND (0.5)	---	---	---
Xylene, m,p-	µg/L	---	---	ND (1.0)	---	---	---
Xylene, o-	µg/L	---	---	ND (1.0)	---	---	---
Xylenes, total	µg/L	---	---	ND (2.0)	---	---	---

Notes:

---	not collected or not available.
0/00	differences from global standards in ppt.
gpm	gallons per minute.
J	analyte was present, but reported value was estimated.
mg/L	milligrams per liter.
ND	parameter not detected at the listed reporting limit.
NTU	nephelometric turbidity units.
pCi/L	picocurries per liter.
µg/L	micrograms per liter.

TABLE 5.2-4
Analytical Suite for Freshwater Supply Well (HNWR-1A) and Extracted River Bank Water Samples
Groundwater Remedy Operation and Maintenance Manual
Volume 2: Sampling and Monitoring Plan
PG&E Topock Compressor Station, Needles, California

INORGANIC ANALYTICAL SUITE – Monthly for the first six months, Quarterly for next 6 months (if the water quality appears to be changing rapidly, monthly sampling would be continued beyond the first 6 months). Following the 1st year, switch to Semi-Annual.

Field Parameters			
Dissolved oxygen	pH	Specific conductance	Turbidity
Oxidation reduction potential	Salinity	Temperature	
Anions (Method E300.0)			
Chloride	Fluoride	Nitrate (as nitrogen)	Sulfate
Radionuclides			
Gross alpha (SM7110C)	Gross beta (E900.0)		
General Chemistry (Methods SM2320-B, SM4500-NH3, SM4500-CN, SM4500-Si C/D, SM2540-C, SM2540, SM5310, CF-IRMS)			
Alkalinity, total as $CaCO_3$	Deuterium	Soluble silica	Total organic carbon (TOC)
Ammonia as nitrogen	Oxygen 18	Total dissolved solids (TDS)	Total suspended solids (TSS)
Cyanide			
Metals (Methods SW6010C, SW6020A, SW7470A, E218.6)			
Aluminum, dissolved	Calcium, dissolved	Magnesium, dissolved	Silver, dissolved
Antimony, dissolved	Chromium, Hexavalent	Manganese, dissolved	Sodium, dissolved
Arsenic, dissolved	Chromium, total dissolved	Mercury, dissolved	Thallium, dissolved
Barium, dissolved	Cobalt, dissolved	Molybdenum, dissolved	Vanadium, dissolved
Beryllium, dissolved	Copper, dissolved	Nickel, dissolved	Zinc, dissolved
Boron, dissolved	Iron, dissolved	Potassium, dissolved	
Cadmium, dissolved	Lead, dissolved	Selenium, dissolved	

ORGANIC ANALYTICAL SUITE –Annually for 1st two years, every other year in subsequent years

Herbicides (Method SW8151A)			
2,4,5-T	2,4-DB	Dicamba	MCPA
2,4,5-TP (Silvex)	4-Nitrophenol	Dichlorprop	MCPP
2,4-D	Dalapon	Dinoseb	Pentachlorophenol
Pesticides (Method SW8081A)			
4,4-DDD	alpha-Chlordane	Endo sulfan II	gamma-Chlordane
4,4-DDE	beta-BHC	Endosulfan sulfate	Heptachlor
4,4-DDT	delta-BHC	Endrin	Heptachlor epoxide
Aldrin	Dieldrin	Endrin aldehyde	Methoxychlor
alpha-BHC	Endo sulfan I	gamma-BHC	Toxaphene
Polyaromatic Hydrocarbons (Method SW8270SIM)			
1-Methyl naphthalene	Benzo (a) anthracene	Chrysene	Naphthalene
2-Methyl naphthalene	Benzo (a) pyrene	Dibenzo (a,h) anthracene	Phenanthrene
Aenaphthene	Benzo (b) fluoranthene	Fluoranthene	Pyrene
Acenaphthylene	Benzo (ghi) perylene	Fluorene	
Anthracene	Benzo (k) fluoranthene	Indeno (1,2,3-cd) pyrene	
Volatile Organic Compounds (Method SW8260B or C)			
1,1,1,2-Tetrachloroethane	1,3,5-Trimethylbenzene	Carbon tetrachloride	Methylene chloride
1,1,1-Trichloroethane	1,3-Dichlorobenzene	Chloro methane	N-Butylbenzene
1,1,2,2-Tetrachloroethane	1,3-Dichloropropane	Chlorobenzene	N-Propylbenzene
1,1,2-Trichloroethane	1,4-Dichlorobenzene	Chloroethane	o-Xylene
1,1,2-Trichlorotrifluoroethane	2,2-Dichloropropane	Chloroform	p-Chlorotoluene
1,1-Dichloroethane	2-Chlorotoluene	cis-1,2-Dichloroethene	sec-Butylbenzene
1,1-Dichloroethene	4-Isopropyltoluene	cis-1,3-Dichloropropene	Styrene
1,1-Dichloropropene	Acetone	Dibromochloromethane	tert-Butylbenzene
1,2,3-Trichlorobenzene	Acrolein	Dibromomethane	Tetrachloroethene
1,2,3-Trichloropropane	Acrylonitrile	Dichlorodifluoromethane	Toluene
1,2,4-Trichlorobenzene	Benzene	Ethylbenzene	trans-1,2-Dichloroethene
1,2,4-Trimethylbenzene	Bromobenzene	Hexachlorobutadiene	trans-1,3-Dichloropropene
1,2-Dibromo-3-chloropropane	Bromochloromethane	Isopropylbenzene	Trichloroethene
1,2-Dibromoethane	Bromodichloromethane	m,p-Xylenes	Trichlorofluoromethane (Freon
1,2-Dichlorobenzene	Bromoform	Methyl ethyl ketone	11)
1,2-Dichloroethane	Bromomethane	Methyl isobutyl ketone	Vinyl chloride
1,2-Dichloropropane	Carbon disulfide	Methyl tert-butyl ether (MTBE)	Xylenes, total

TABLE 5.2-5
Analytical Suite for MW-55 Cluster Samples
Groundwater Remedy Operation and Maintenance Manual
Volume 2: Sampling and Monitoring Plan
PG&E Topock Compressor Station, Needles, California

INORGANIC ANALYTICAL SUITE – Initially Annual			
Field Parameters			
Dissolved oxygen	pH	Specific conductance	Turbidity
Oxidation reduction potential	Salinity	Temperature	
Anions (Method E300.0)			
Chloride	Fluoride	Nitrate (as nitrogen)	Sulfate
Radionuclides			
Gross alpha (SM7110C)	Gross beta (E900.0)		
General Chemistry (Methods SM2320-B, SM4500-NH3, SM4500-CN, SM4500-Si C/D, SM2540-C, SM2540, SM5310, CF-IRMS)			
Alkalinity, total as $CaCO_3$	Deuterium	Soluble silica	Total organic carbon (TOC)
Ammonia as nitrogen	Oxygen 18	Total dissolved solids (TDS)	Total suspended solids (TSS)
Cyanide			
Metals (Methods SW6010C, SW6020A, SW7470A, E218.6)			
Aluminum, dissolved	Calcium, dissolved	Magnesium, dissolved	Silver, dissolved
Antimony, dissolved	Chromium, Hexavalent	Manganese, dissolved	Sodium, dissolved
Arsenic, dissolved	Chromium, total dissolved	Mercury, dissolved	Thallium, dissolved
Barium, dissolved	Cobalt, dissolved	Molybdenum, dissolved	Vanadium, dissolved
Beryllium, dissolved	Copper, dissolved	Nickel, dissolved	Zinc, dissolved
Boron, dissolved	Iron, dissolved	Potassium, dissolved	
Cadmium, dissolved	Lead, dissolved	Selenium, dissolved	
ORGANIC ANALYTICAL SUITE – Initially Biennial			
Herbicides (Method SW8151A)			
2,4,5-T	2,4-DB	Dicamba	MCPA
2,4,5-TP (Silvex)	4-Nitrophenol	Dichlorprop	MCPP
2,4-D	Dalapon	Dinoseb	Pentachlorophenol
Pesticides (Method SW8081A)			
4,4-DDD	alpha-Chlordane	Endo sulfan II	gamma-Chlordane
4,4-DDE	beta-BHC	Endosulfan sulfate	Heptachlor
4,4-DDT	delta-BHC	Endrin	Heptachlor epoxide
Aldrin	Dieldrin	Endrin aldehyde	Methoxychlor
alpha-BHC	Endo sulfan I	gamma-BHC	Toxaphene
Polyaromatic Hydrocarbons (Method SW8270SIM)			
1-Methyl naphthalene	Benzo (a) anthracene	Chrysene	Naphthalene
2-Methyl naphthalene	Benzo (a) pyrene	Dibenzo (a,h) anthracene	Phenanthrene
Aenaphthene	Benzo (b) fluoranthene	Fluoranthene	Pyrene
Acenaphthylene	Benzo (ghi) perylene	Fluorene	
Anthracene	Benzo (k) fluoranthene	Indeno (1,2,3-cd) pyrene	
Volatile Organic Compounds (Method SW8260B or C)			
1,1,1,2-Tetrachloroethane	1,3,5-Trimethylbenzene	Carbon tetrachloride	Methylene chloride
1,1,1-Trichloroethane	1,3-Dichlorobenzene	Chloro methane	N-Butylbenzene
1,1,2,2-Tetrachloroethane	1,3-Dichloropropane	Chlorobenzene	N-Propylbenzene
1,1,2-Trichloroethane	1,4-Dichlorobenzene	Chloroethane	o-Xylene
1,1,2-Trichlorotrifluoroethane	2,2-Dichloropropane	Chloroform	p-Chlorotoluene
1,1-Dichloroethane	2-Chlorotoluene	cis-1,2-Dichloroethene	sec-Butylbenzene
1,1-Dichloroethene	4-Isopropyltoluene	cis-1,3-Dichloropropene	Styrene
1,1-Dichloropropene	Acetone	Dibromochloromethane	tert-Butylbenzene
1,2,3-Trichlorobenzene	Acrolein	Dibromomethane	Tetrachloroethene
1,2,3-Trichloropropane	Acrylonitrile	Dichlorodifluoromethane	Toluene
1,2,4-Trichlorobenzene	Benzene	Ethylbenzene	trans-1,2-Dichloroethene
1,2,4-Trimethylbenzene	Bromobenzene	Hexachlorobutadiene	trans-1,3-Dichloropropene
1,2-Dibromo-3-chloropropane	Bromochloromethane	Isopropylbenzene	Trichloroethene
1,2-Dibromoethane	Bromodichloromethane	m,p-Xylenes	Trichlorofluoromethane (Freon
1,2-Dichlorobenzene	Bromoform	Methyl ethyl ketone	11)
1,2-Dichloroethane	Bromomethane	Methyl isobutyl ketone	Vinyl chloride
1,2-Dichloropropane	Carbon disulfide	Methyl tert-butyl ether (MTBE)	Xylenes, total

TABLE 5.3-1
Analytical Suite for Process Control Monitoring – Remedy-produced Water Management
Groundwater Remedy Operation and Maintenance Manual
Volume 2: Sampling and Monitoring Plan
PG&E Topock Compressor Station, Needles, California

FIELD PARAMETERS			
All Sample Locations – Daily			
Temperature	pH	Specific conductance	Turbidity
Influent Sample Location – Weekly			
Oxidation reduction potential	Salinity		
All Sample Locations – Weekly			
Total Chromium	Dissolved Iron	Dissolved Manganese	Hexavalent Chromium
INORGANIC ANALYTICAL SUITE – Initial Frequency Quarterly from Influent and Conditioned Water Tanks			
Anions (Method E300.0)			
Chloride	Fluoride	Nitrate (as nitrogen)	Sulfate
General Chemistry (Methods SM2320-B, SM4500-NH3, SM4500-CN, SM4500-Si C/D, SM2540-C, SM2540, SM5310, CF-IRMS)			
Alkalinity, total as $CaCO_3$	Deuterium	Soluble silica	Total organic carbon (TOC)
Ammonia as nitrogen	Oxygen 18	Total dissolved solids (TDS)	Total suspended solids (TSS)
Cyanide			
Metals (Methods SW6010C, SW6020A, SW7470A, E218.6)			
Aluminum, dissolved	Calcium, dissolved	Magnesium, dissolved	Silver, dissolved
Antimony, dissolved	Chromium, Hexavalent	Manganese, dissolved	Sodium, dissolved
Arsenic, dissolved	Chromium, total dissolved	Mercury, dissolved	Thallium, dissolved
Barium, dissolved	Cobalt, dissolved	Molybdenum, dissolved	Vanadium, dissolved
Beryllium, dissolved	Copper, dissolved	Nickel, dissolved	Zinc, dissolved
Boron, dissolved	Iron, dissolved	Potassium, dissolved	
Cadmium, dissolved	Lead, dissolved	Selenium, dissolved	

TABLE 5.4-1
Analytical Suite for Domestic/Private Wells Samples
Groundwater Remedy Operation and Maintenance Manual
Volume 2: Sampling and Monitoring Plan
PG&E Topock Compressor Station, Needles, California

SAMPLING FREQUENCY (Baseline prior to remedy start-up, then biennial)			
Field Parameters			
Dissolved oxygen	pH	Specific conductance	Turbidity
Oxidation reduction potential	Salinity	Temperature	
Anions (Method E300.0)			
Chloride	Fluoride	Nitrate (as nitrogen)	Sulfate
General Chemistry (Methods SM2320-B, SM4500-NH3, SM4500-CN, SM4500-Si C/D, SM2540-C, SM2540, SM5310, CF-IRMS)			
Alkalinity, total as $CaCO_3$	Ammonia as nitrogen	Total Dissolved Solids (TDS)	
Metals (Methods SW6010C, SW6020A)			
Arsenic, dissolved	Chromium, total dissolved	Manganese, dissolved	Selenium, dissolved
Calcium, dissolved	Iron, dissolved	Molybdenum, dissolved	Sodium, dissolved
Chromium, hexavalent	Magnesium, dissolved	Potassium, dissolved	

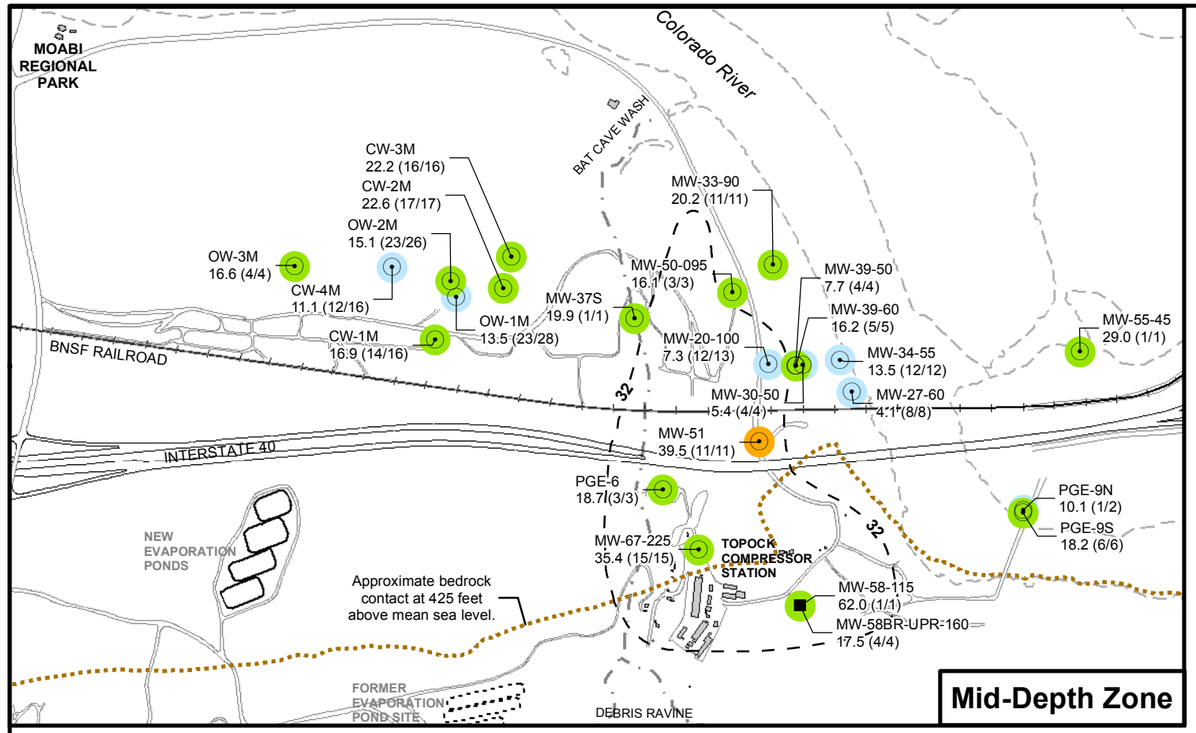

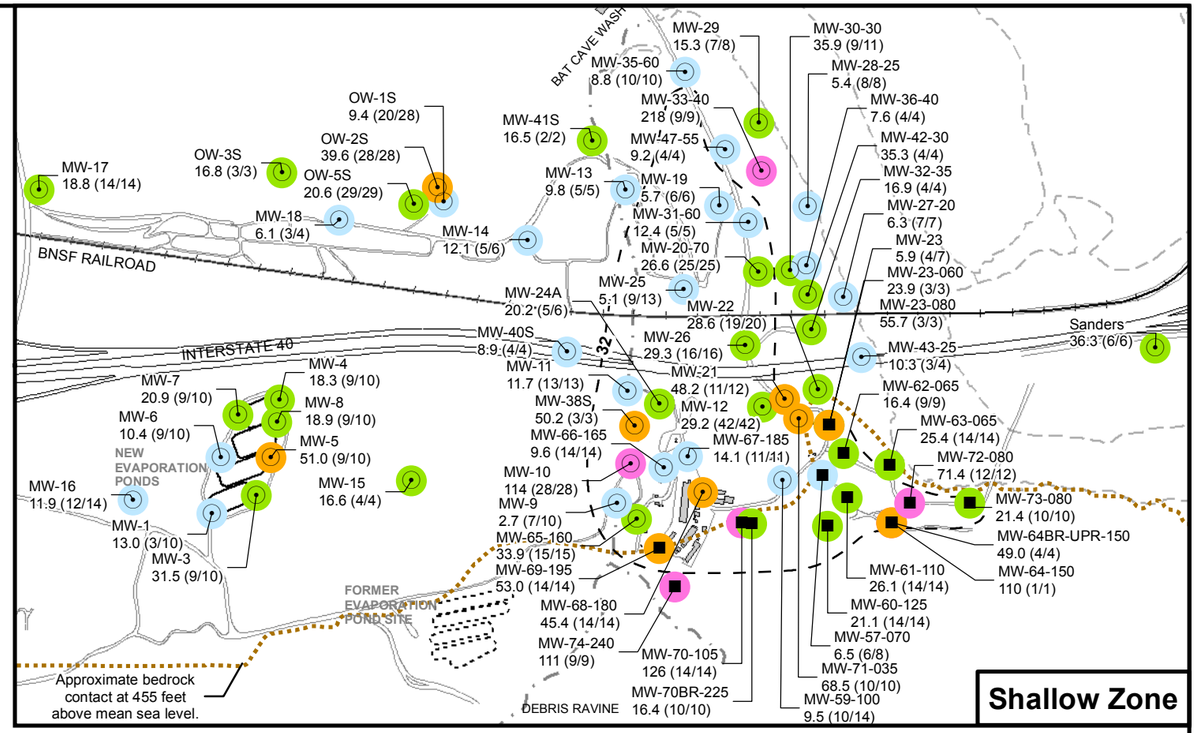

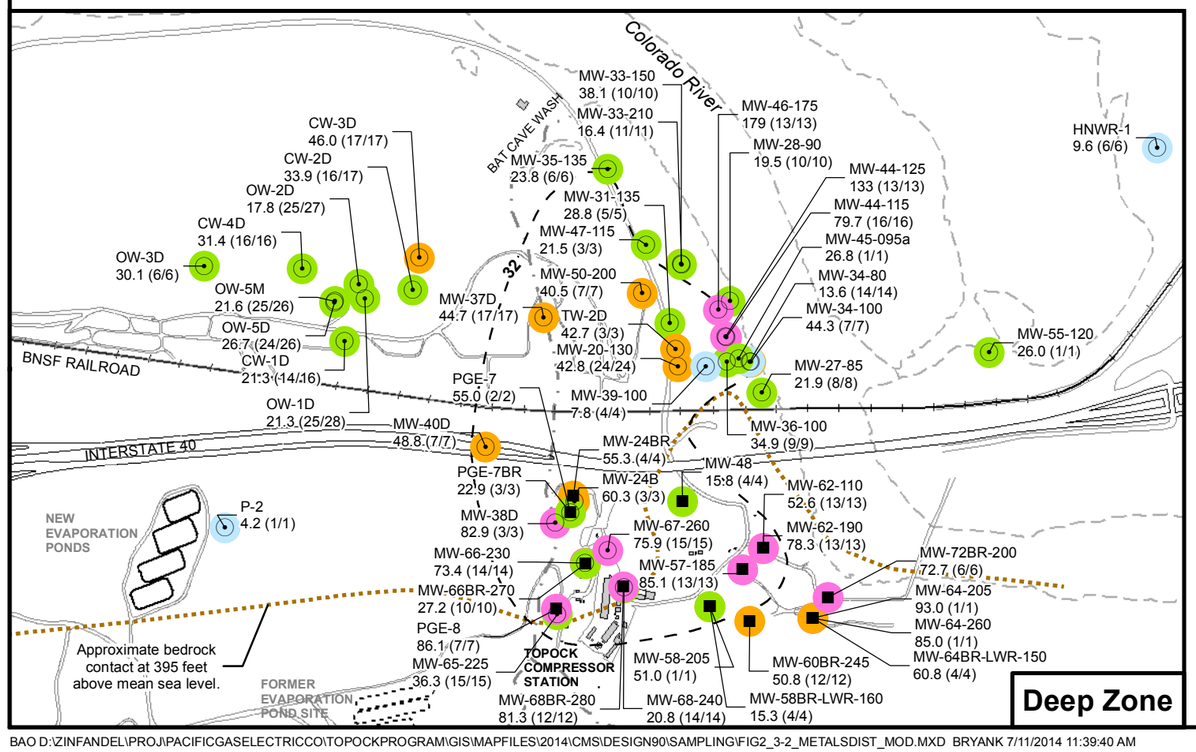

LEGEND

- Groundwater Well completed in Alluvial Aquifer (Shallow, Mid-depth or Deep Zones)
- Groundwater Well completed in Bedrock

Dissolved Molybdenum Average Concentrations

MW-17 ← Well ID

5.8 (8/16) ← (No. of detections / No. of samples)

Average concentration, micrograms per liter (µg/L) 1997 - 2013 groundwater sampling

- ≤ 15.0 µg/L
- 15.0 - 36.3 µg/L
- 36.4 - 70.0 µg/L
- > 70.0 µg/L

Approximate outline of Cr(VI) in Alluvial Aquifer depth zone ≥ 32 µg/L, Fourth Quarter 2013

Notes:
1. Molybdenum Background Study Upper Tolerance Limit (UTL) = 36.3 µg/L
2. In computing averages, non-detects were assigned half of the reporting limit concentration. Some averages may be elevated due solely to high reporting limits for non-detect samples. Refer to the complete data set in Appendix A1 of the BOD Report for verification.

FIGURE 5.1-1
MOLYBDENUM CONCENTRATIONS IN GROUNDWATER, JULY 1997 - DECEMBER 2013

GROUNDWATER REMEDY OPERATION AND MAINTENANCE MANUAL
VOLUME 2: SAMPLING AND MONITORING PLAN
PG&E TOPOCK COMPRESSOR STATION, NEEDLES, CALIFORNIA

CH2MHILL

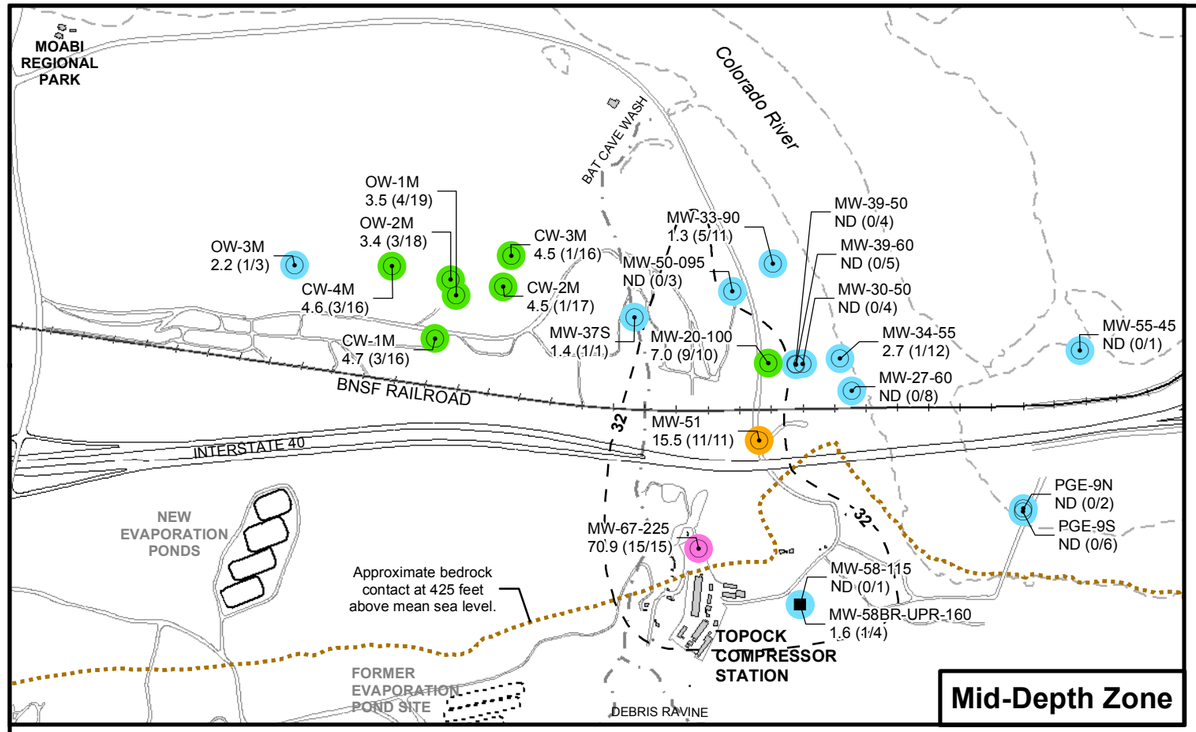

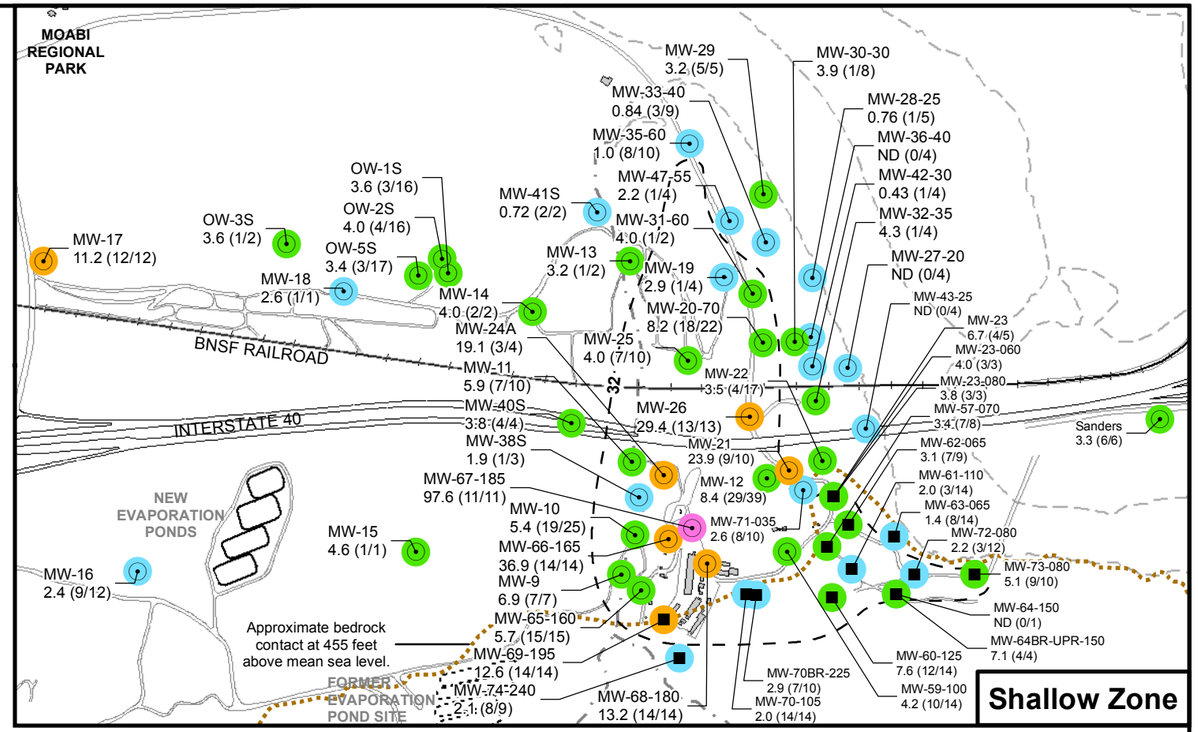

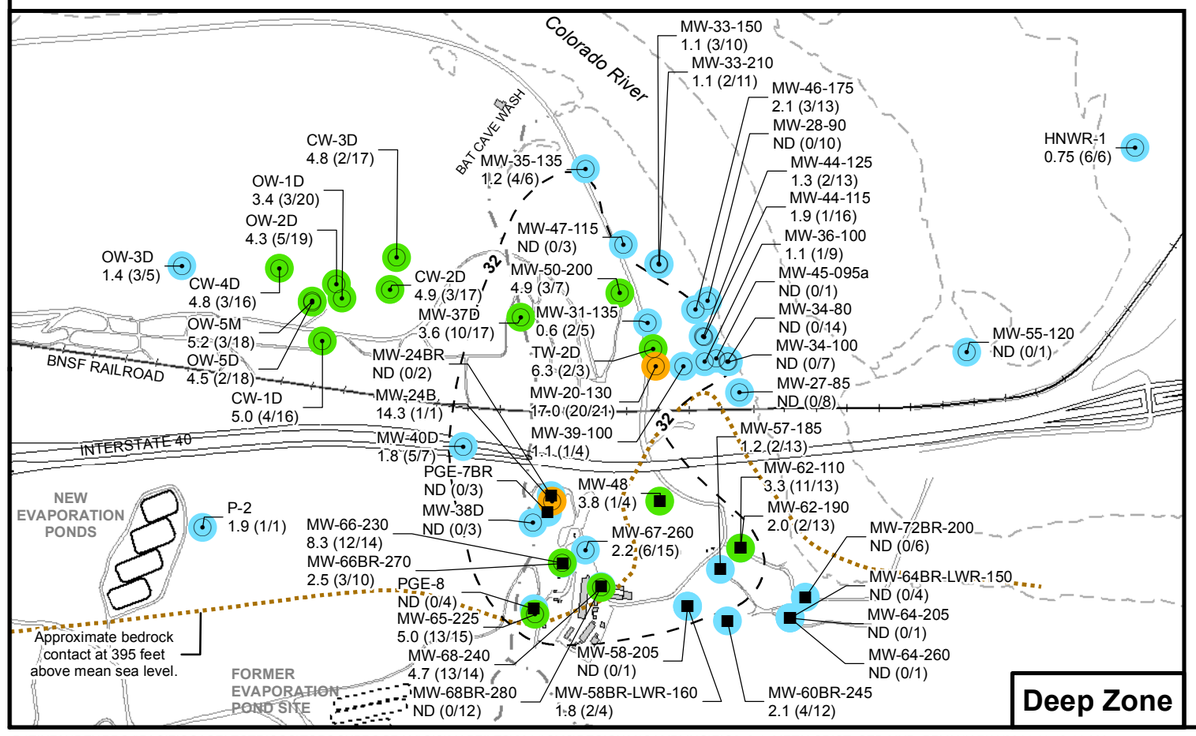

LEGEND

- ⊙ Groundwater Well completed in Alluvial Aquifer (Shallow, Mid-depth or Deep Zones)
- ■ Groundwater Well completed in Bedrock

Dissolved Selenium Average Concentrations

MW-17 ← Well ID

5.8 (8/16) ← (No. of detections / No. of samples)

Average concentration, micrograms per liter (µg/L) 1997 - 2011 groundwater sampling

- ⊙ ≤ 3.0 µg/L
- ⊙ 3.0 - 10.3 µg/L
- ⊙ 10.4 - 50.0 µg/L
- ⊙ > 50.0 µg/L

Approximate outline of Cr(VI) in Alluvial Aquifer depth zone ≥ 32 µg/L, Fourth Quarter 2011

Notes:
1. Selenium Background Study Upper Tolerance Limit (UTL) = 10.3 µg/L
2. Selenium applicable or relevant and appropriate requirement (ARAR) = 50.0 µg/L
3. In computing averages, non-detects were assigned half of the reporting limit concentration. Some averages may be elevated due solely to high reporting limits for non-detect samples. Refer to the complete data set in Appendix A1 of the BOD Report for verification.

FIGURE 5.1-2
SELENIUM CONCENTRATIONS IN GROUNDWATER, JULY 1997 - DECEMBER 2013

GROUNDWATER REMEDY OPERATION AND MAINTENANCE MANUAL
VOLUME 2: SAMPLING AND MONITORING PLAN
PG&E TOPOCK COMPRESSOR STATION, NEEDLES, CALIFORNIA

CH2MHILL

D:\ZINFANDEL\PROJ\PACIFICGASELECTRICCO\TOPOCKPROGRAM\GIS\MAPFILES\2014\CMS\DESIGN90\SAMPLING\FIG2_3-1_METALSDIST_SED.MXD BRYANK 7/11/2014 11:42:41 AM

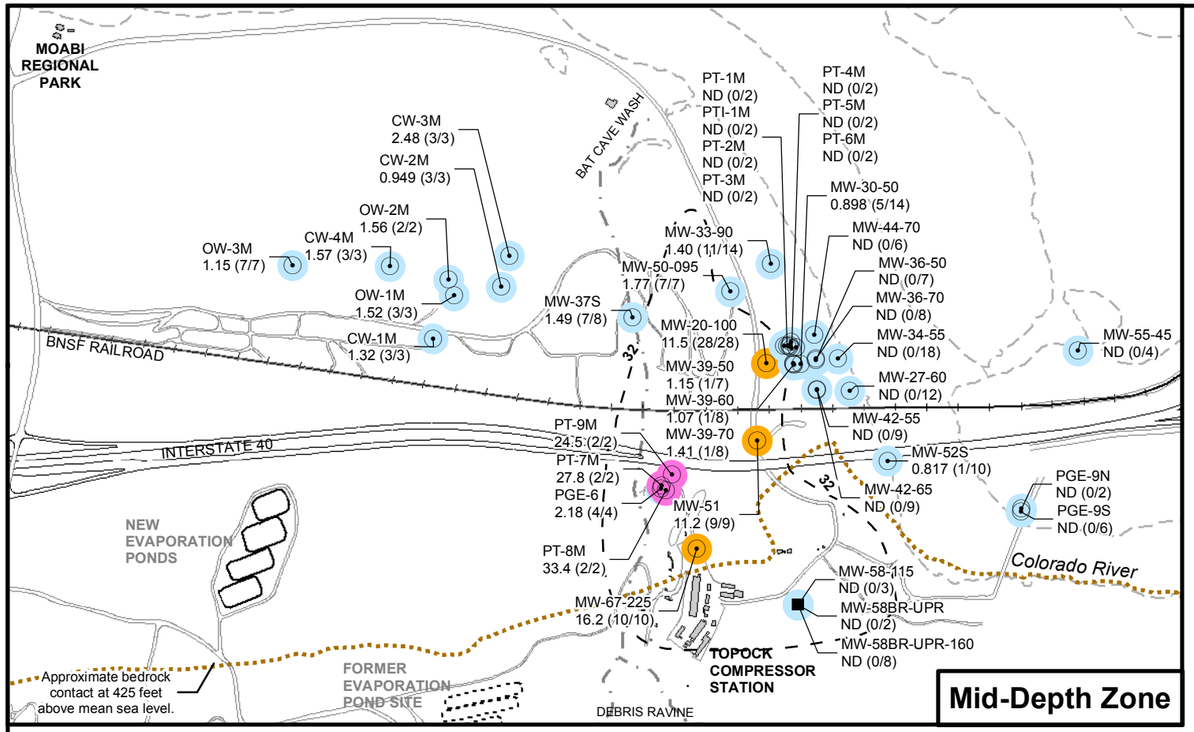

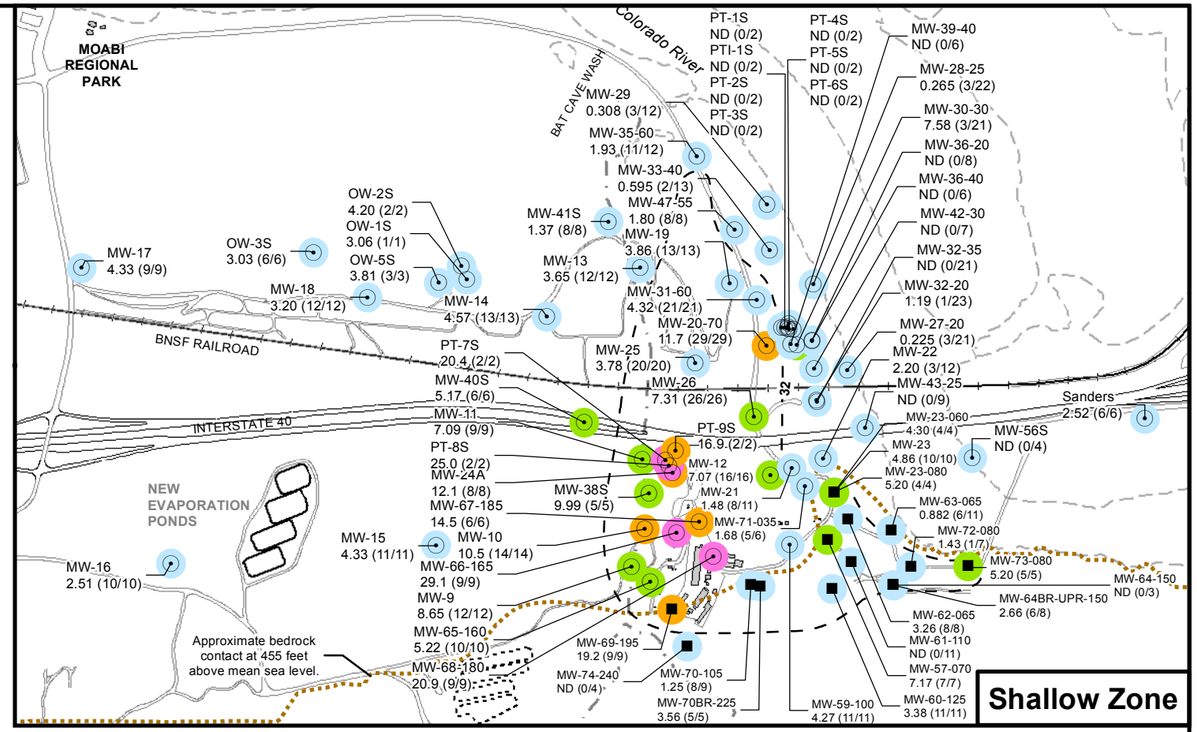

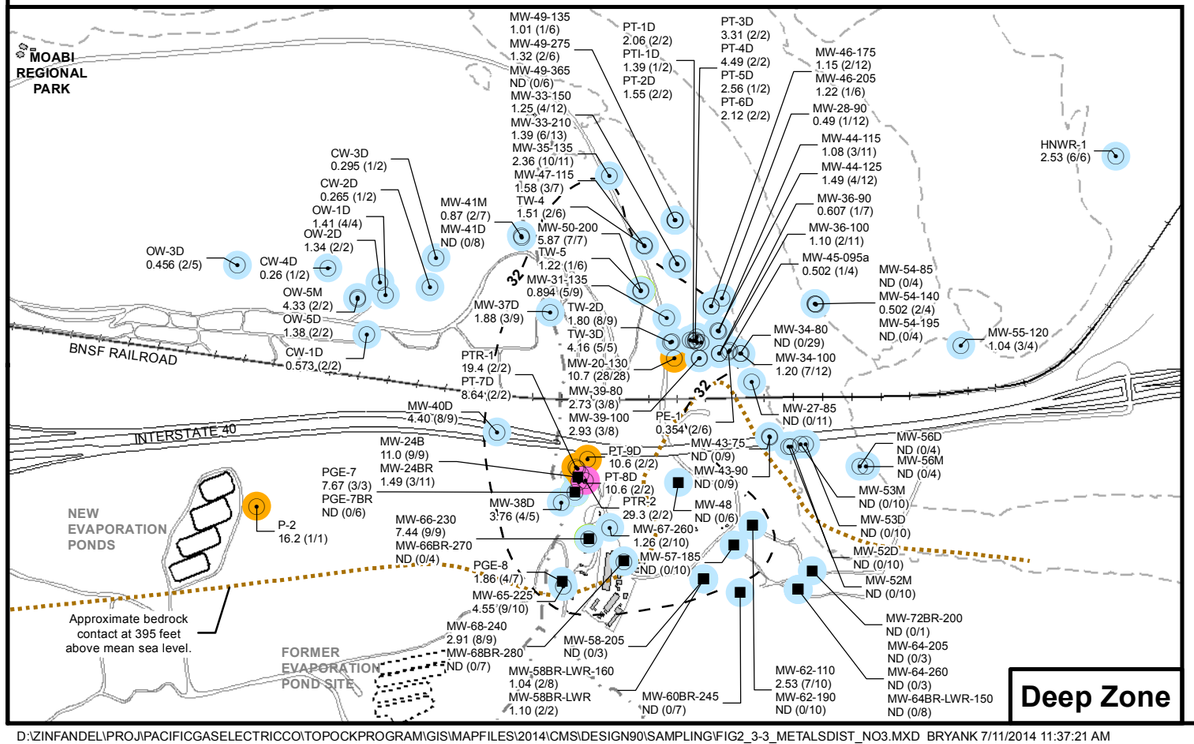

LEGEND

- Groundwater Well completed in Alluvial Aquifer (Shallow, Mid-depth or Deep Zones)
- Groundwater Well completed in Bedrock

Nitrate Average Concentrations

MW-17 ← Well ID

5.8 (8/16) ← (No. of detections / No. of samples)

Average concentration, milligrams per liter (mg/L) (expressed as Nitrogen)
1997 - 2013 groundwater sampling

- ≤ 5.03 mg/L
- 5.03 - 10.0 mg/L
- 10.1 - 19.9 mg/L
- > 19.9 mg/L

Approximate outline of Cr(VI) in Alluvial Aquifer depth zone ≥ 32 µg/L, Fourth Quarter 2013

Notes:
1. Nitrate Background Study Upper Tolerance Limit (UTL) = 5.03 mg/L
2. Nitrate applicable or relevant and appropriate requirement (ARAR) = 10.0 mg/L
3. In computing averages, non-detects were assigned half of the reporting limit concentration. Some averages may be elevated due solely to high reporting limits for non-detect samples. Refer to the complete data set in Appendix A1 of the BOD Report for verification.

FIGURE 5.1-3
NITRATE CONCENTRATIONS IN GROUNDWATER, JULY 1997 - DECEMBER 2013

GROUNDWATER REMEDY OPERATION AND MAINTENANCE MANUAL
VOLUME 2: SAMPLING AND MONITORING PLAN
PG&E TOPOCK COMPRESSOR STATION, NEEDLES, CALIFORNIA

CH2MHILL

D:\ZINFANDEL\PROJ\PACIFICGASELECTRICCO\TOPOCKPROGRAM\GIS\MAPFILES\2014\CMS\DESIGN90\SAMPLING\FIG2_3-3_METALSDIST_NO3.MXD BRYANK 7/11/2014 11:37:21 AM

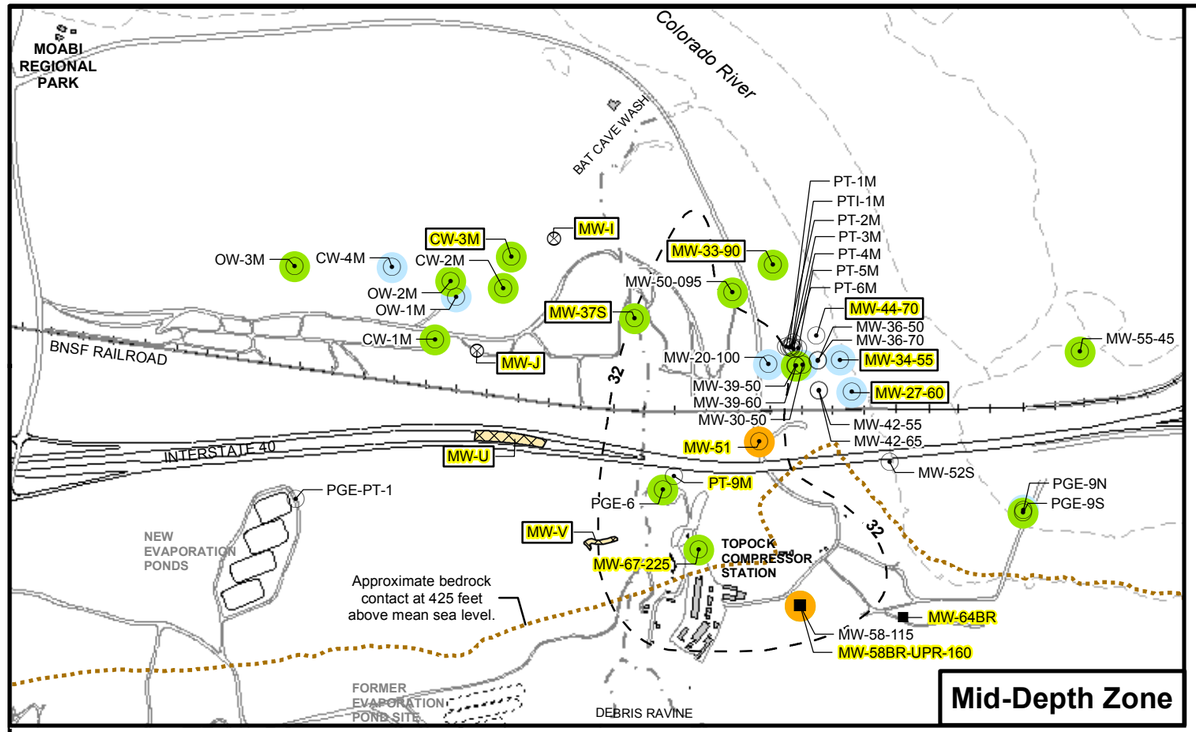

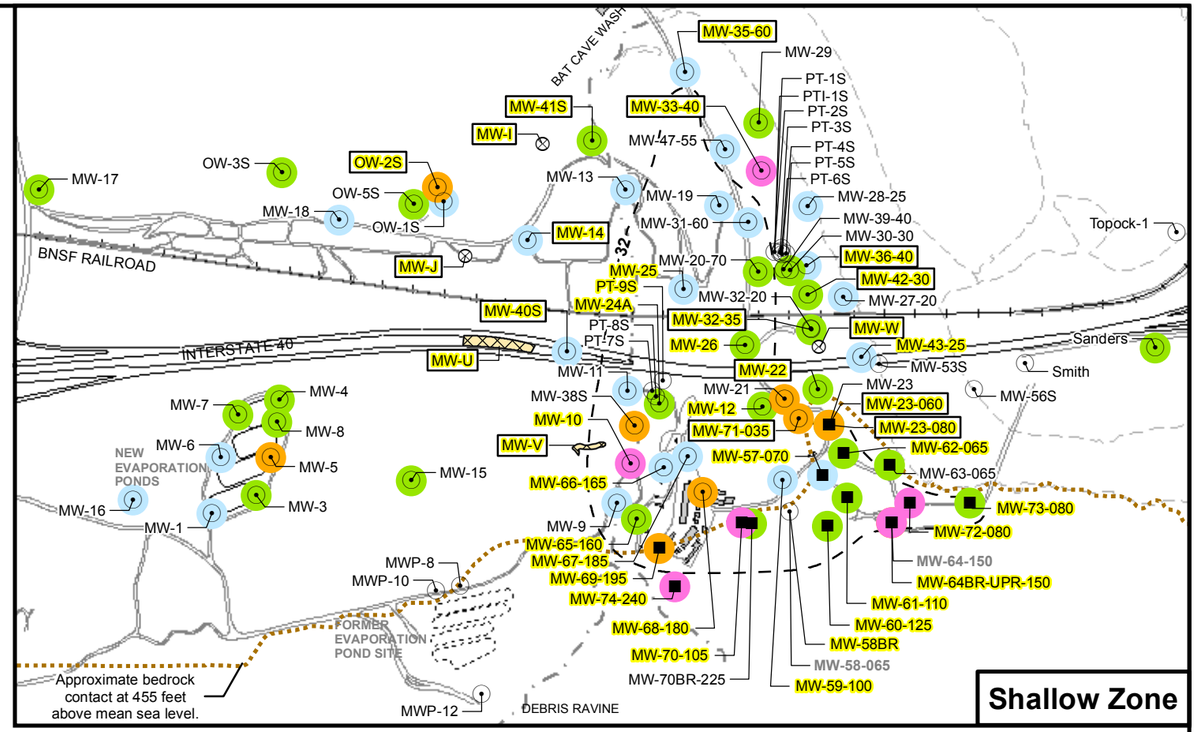

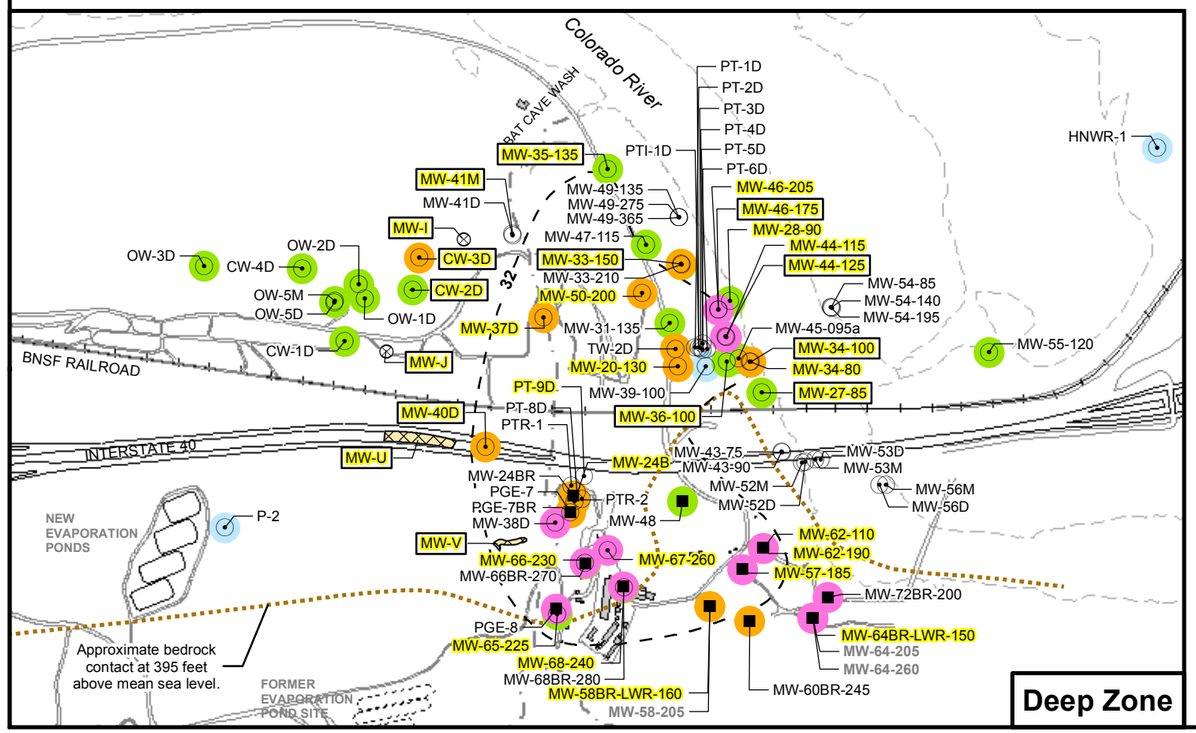

LEGEND

- Groundwater Well completed in Alluvial Aquifer (Shallow, Mid-depth or Deep Zones)
- Groundwater Well completed in Bedrock
- Proposed New Groundwater Well
- Proposed New Groundwater Well - Location Indefinite

Dissolved Molybdenum Average Concentrations

MW-17 ← Well ID

- No Data
- ≤ 15.0 µg/L
- 15.0 - 36.3 µg/L
- 36.4 - 70.0 µg/L
- > 70.0 µg/L

Yellow highlighted well with border indicates the well is included in COPC Perimeter Assessment Program.
Yellow highlighted well indicates wells proposed for Mo monitoring.
Gray well names indicates wells no longer exist or dry.

Approximate outline of Cr(VI) in Alluvial Aquifer depth zone ≥ 32 µg/L, Fourth Quarter 2013

Notes:
1. Includes data through February 2013 for the East Ravine-Topock Compressor Station wells.
2. Molybdenum Background Study Upper Tolerance Limit (UTL) = 36.3 µg/L
3. In computing averages, non-detects were assigned half of the reporting limit concentration. Some averages may be elevated due solely to high reporting limits for non-detect samples. Refer to the complete data set in Appendix A1 for verification.

FIGURE 5.1-4
MOLYBDENUM MONITORING LOCATIONS
GROUNDWATER REMEDY OPERATION AND MAINTENANCE MANUAL,
VOLUME 2 SAMPLING AND MONITORING PLAN
PG&E TOPOCK COMPRESSOR STATION,
NEEDLES, CALIFORNIA

BAO D:\ZINFANDEL\PROJ\PACIFICGASELECTRICCO\TOPOCKPROGRAM\GIS\MAPFILES\2014\CMS\DESIGN90\SAMPLING\ALLWELLS\FIG514_METALSDIST_MOD.MXD BRYANK 7/22/2014 1:38:29 PM

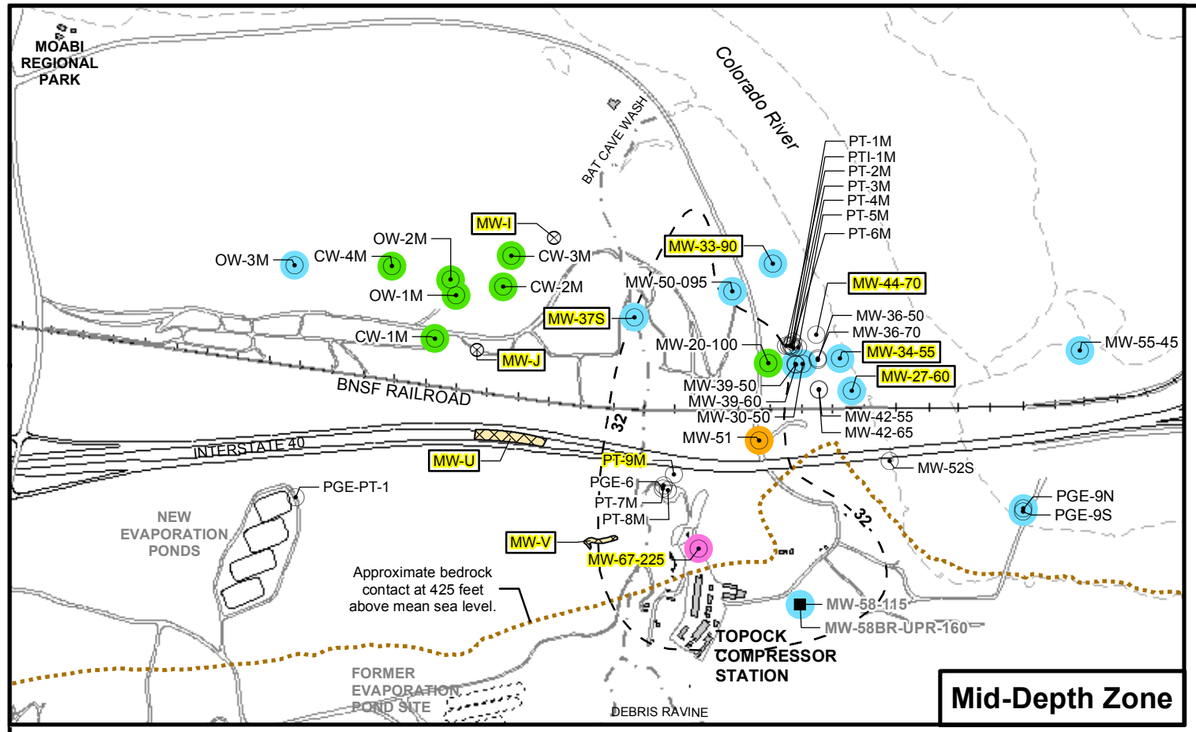

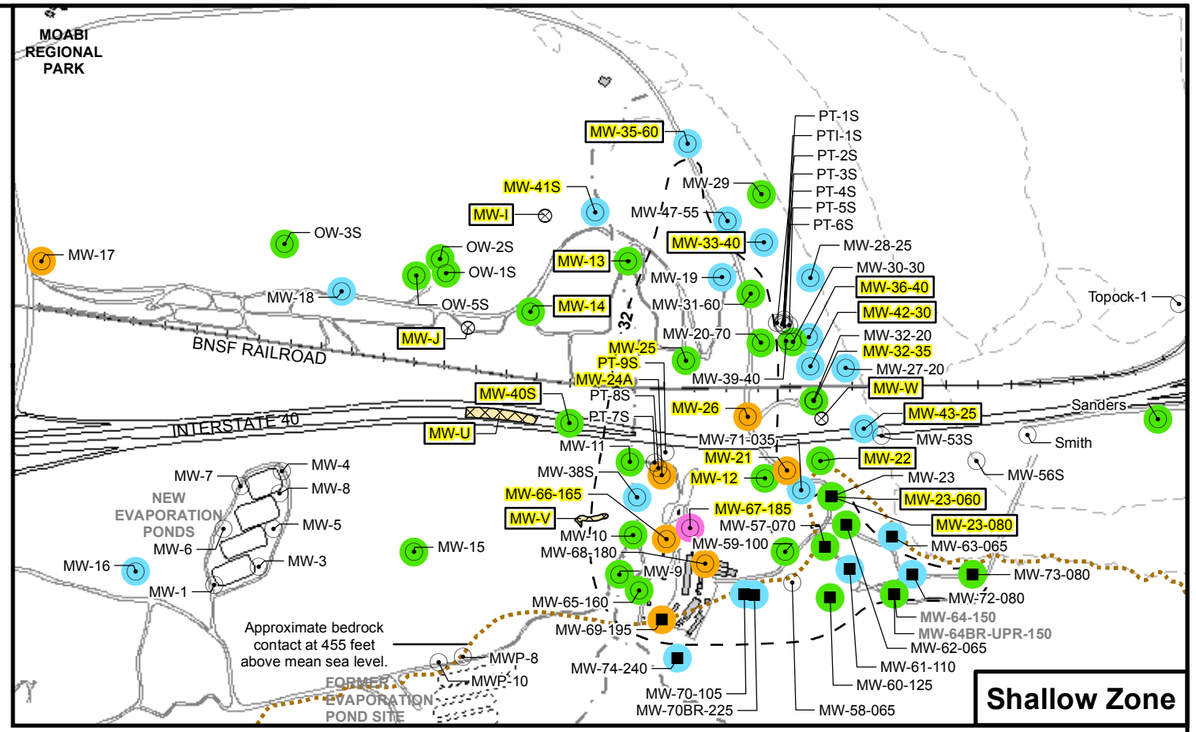

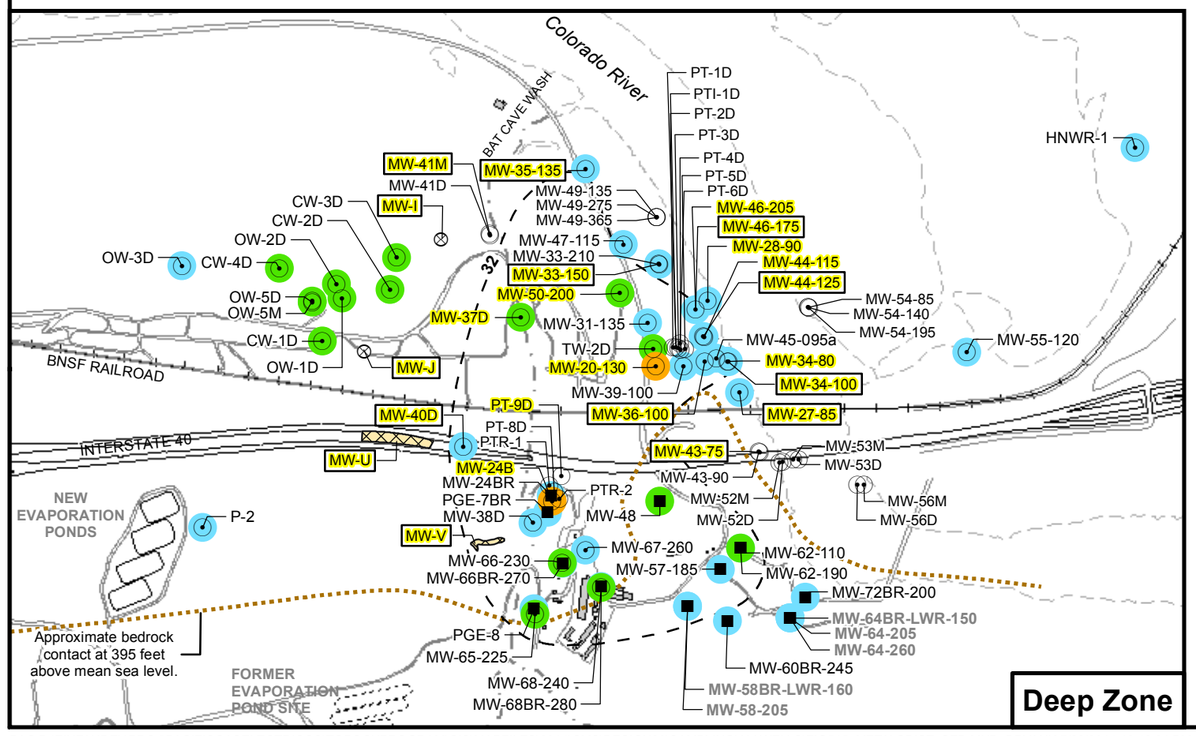

LEGEND

- Groundwater Well completed in Alluvial Aquifer (Shallow, Mid-depth or Deep Zones)
- Groundwater Well completed in Bedrock
- Proposed New Groundwater Well
- Proposed New Groundwater Well - Location Indefinite

Dissolved Selenium Average Concentrations

MW-17 ← Well ID

- No Data
- ≤ 3.0 µg/L
- 3.0 - 10.3 µg/L
- 10.4 - 50.0 µg/L
- > 50.0 µg/L

Approximate outline of Cr(VI) in Alluvial Aquifer depth zone ≥ 32 µg/L, Fourth Quarter 2011

Yellow highlighted well with border indicates the well is included in COPC Perimeter Assessment Program.
Yellow highlighted well indicates wells proposed for Mo monitoring.
Gray well names indicates wells no longer exist or dry.

Notes:
1. Includes data through February 2012 for the East Ravine-Topock Compressor Station wells.
2. Selenium Background Study Upper Tolerance Limit (UTL) = 10.3 µg/L
3. Selenium applicable or relevant and appropriate requirement (ARAR) = 50.0 µg/L
4. In computing averages, non-detects were assigned half of the reporting limit concentration. Some averages may be elevated due solely to high reporting limits for non-detect samples. Refer to the complete data set in Appendix A1 for verification.

FIGURE 5.1-5
SELENIUM MONITORING LOCATIONS
GROUNDWATER REMEDY OPERATION AND MAINTENANCE MANUAL,
VOLUME 2 SAMPLING AND MONITORING PLAN
PG&E TOPOCK COMPRESSOR STATION,
NEEDLES, CALIFORNIA

BAO D:\ZINFANDEL\PROJ\PACIFICGASELECTRICCO\TOPOCKPROGRAM\GIS\MAPFILES\2014\CMS\DESIGN90\SAMPLING\ALLWELLS\FIG515_METALSDIST_SED.MXD BRYANK 7/22/2014 12:49:31 PM

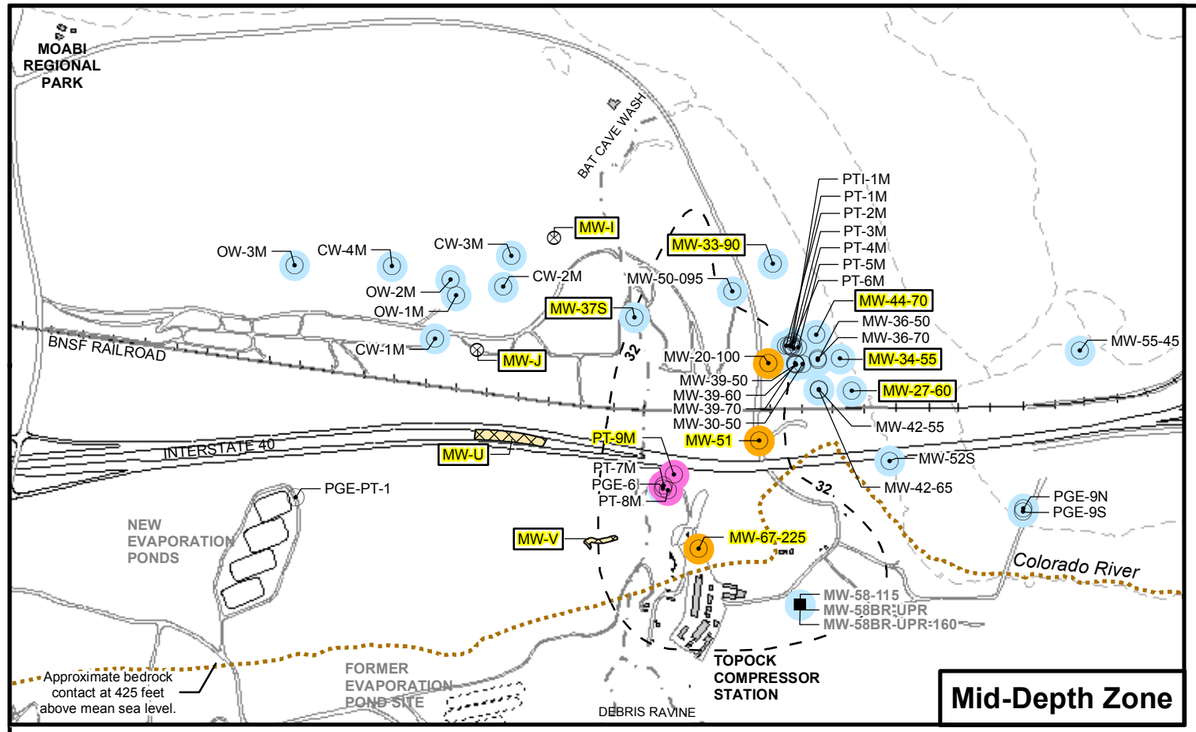

Mid-Depth Zone

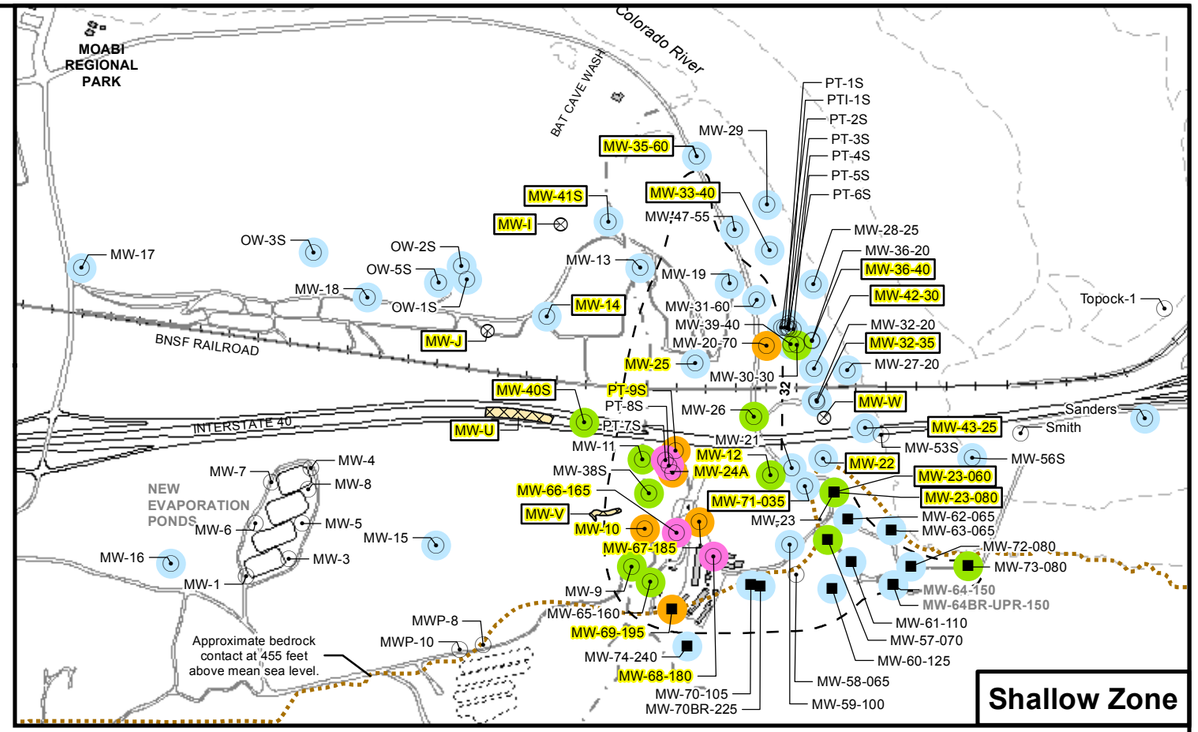

Shallow Zone

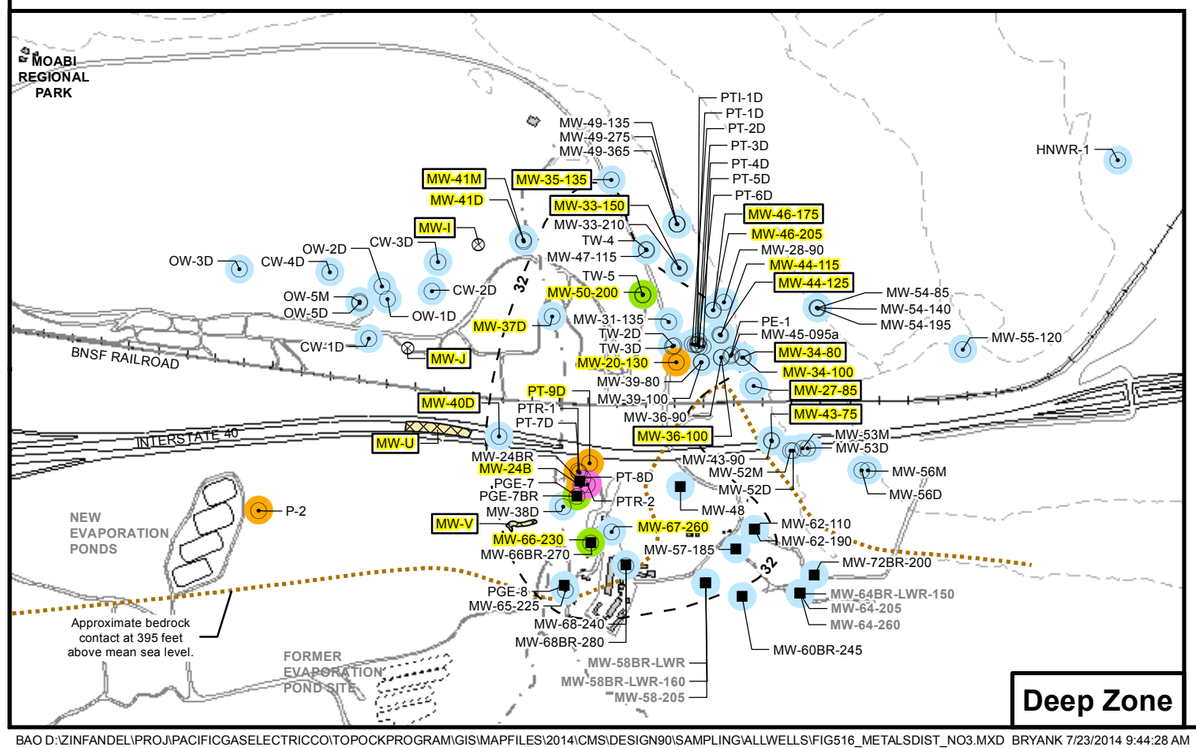

Deep Zone

LEGEND

- Groundwater Well completed in Alluvial Aquifer (Shallow, Mid-depth or Deep Zones)
- Groundwater Well completed in Bedrock
- Proposed New Groundwater Well
- Proposed New Groundwater Well - Location Indefinite

Nitrate Average Concentrations

MW-17 ← Well ID

- No Data
- ≤ 5.03 mg/L
- 5.03 - 10.0 mg/L
- 10.1 - 19.9 mg/L
- > 19.9 mg/L

Approximate outline of Cr(VI) in Alluvial Aquifer depth zone ≥ 32 µg/L, Fourth Quarter 2013

Yellow highlighted well with border indicates the well is included in COPC Perimeter Assessment Program.
Yellow highlighted well indicates wells proposed for Mo monitoring.
Gray well names indicates wells no longer exist or dry.

Notes:
1. Includes data through February 2013 for the East Ravine-Topock Compressor Station wells.
2. Nitrate Background Study Upper Tolerance Limit (UTL) = 5.03 mg/L
3. Nitrate applicable or relevant and appropriate requirement (ARAR) = 10.0 mg/L
4. In computing averages, non-detects were assigned half of the reporting limit concentration. Some averages may be elevated due solely to high reporting limits for non-detect samples. Refer to the complete data set in Appendix A1 for verification.

FIGURE 5.1-6
NITRATE MONITORING LOCATIONS
GROUNDWATER REMEDY OPERATION AND MAINTENANCE MANUAL, VOLUME 2 SAMPLING AND MONITORING PLAN
PG&E TOPOCK COMPRESSOR STATION, NEEDLES, CALIFORNIA

BAO D:\ZINFANDEL\PROJ\PACIFICGASELECTRICCO\TOPOCKPROGRAM\GIS\MAPFILES\2014\CMS\DESIGN90\SAMPLING\ALLWELLS\FIG516_METALSDIST_NO3.MXD BRYANK 7/23/2014 9:44:28 AM

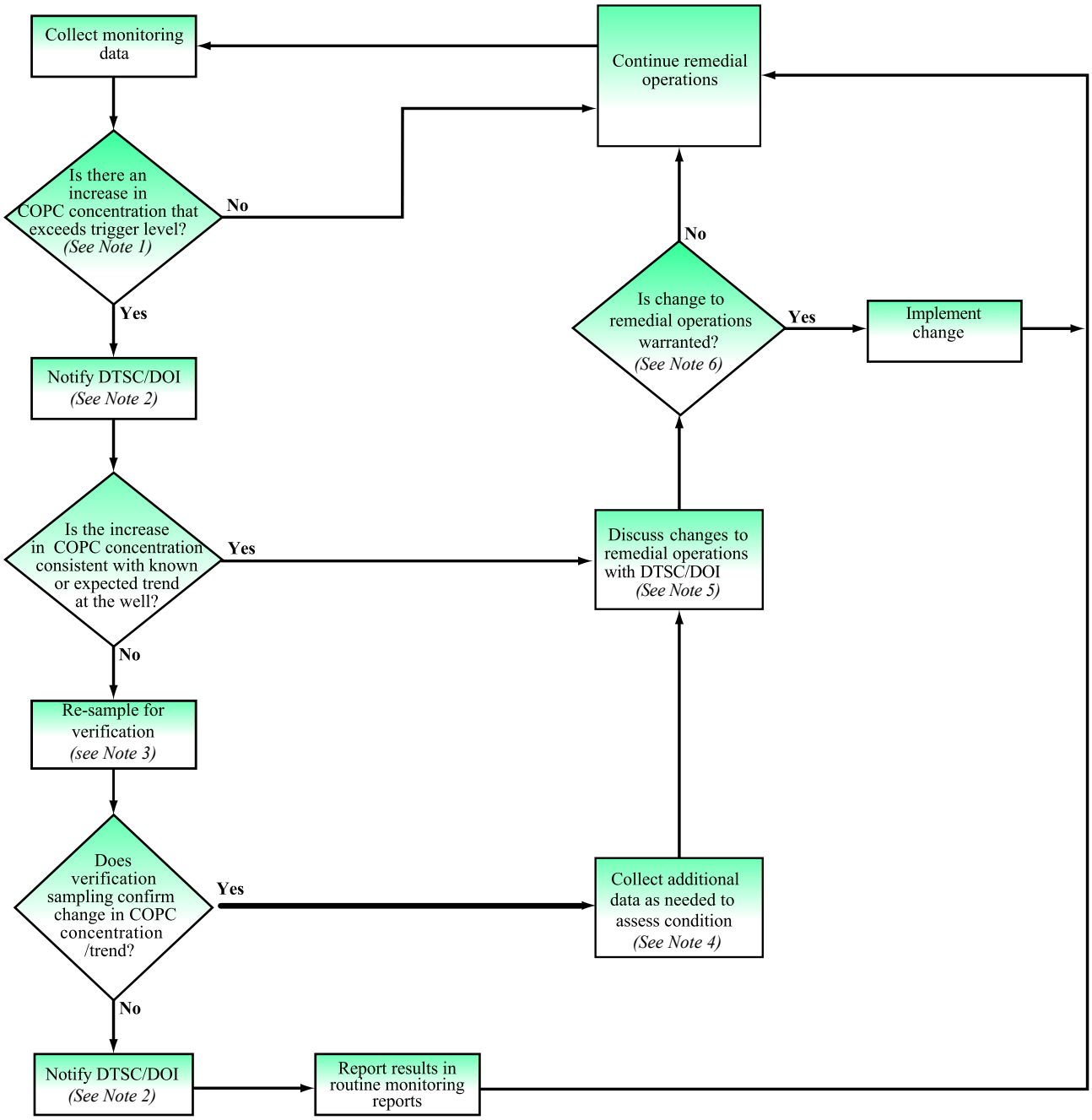

Notes:

1. The wells subject to this contingency plan are defined in Table 2.1-4 and shown on Figures 5.1-4, 5.1-5, and 5.1-6.
2. Notification will be provided within 5 days following receipt of validated laboratory results.
3. Re-sampling to occur with 45 days of receipt of validated laboratory results.
4. Data needed to assess trend or condition may include increased sampling frequency at triggered well, increased sampling at adjacent wells (i.e., lateral, vertical), or collection of additional data to assess change in geochemical conditions.
5. Assess the gradient direction near the triggered well and evaluate potential for remedial measure optimization accordingly. Optimization may include change to pumping or injection rates.
6. Changes to manage COPCs will be balanced against optimization for chromium removal.

FIGURE 5.1-7
COPC PERIMETER ASSESSMENT PLAN

GROUNDWATER REMEDY OPERATION AND MAINTENANCE MANUAL
VOLUME 1: OPERATION AND MAINTENANCE PLAN
PG&E TOPOCK COMPRESSOR STATION,
NEEDLES, CALIFORNIA

SECTION 6

Data Management, Documentation, and Reporting

6.1 Data Validation

Data validation procedures are provided in Sections 6.3 and 6.4 of the PG&E Program Quality Assurance Program Plan (QAPP) (CH2M HILL 2012b). In summary, laboratory data will be imported into the project database and the data will be validated by the project chemist or designee. A combination of automated data validation (AutoDV) and manual validation will be performed on the project data. A data quality evaluation form will be generated for all sample results. Data quality evaluation results will be summarized and included in the quarterly progress reports to the agencies. The summary will list and discuss data that do not meet the data quality objectives specified in the QAPP, if any.

6.2 Data Evaluation

Analytical results will be evaluated for attainment of the RAOs presented in Section 1.1.1 and to determine remedy performance. Data evaluation summaries will be provided in quarterly progress reports following implementation of the remedy.

6.3 Data Management

Three types of data are expected to be collected during implementation of the remedy: field measurement/ process monitoring data, onsite laboratory data, and offsite laboratory data. The management of each type of data is described below. Exhibit 6.3-1 presents a simplified data management process for the project.

Field Measurement/Process Monitoring Data

Field measurements will be collected from the monitoring and remediation well network, the carbon amendment facilities, and the remedy-produced water conditioning plant. Measurements will be conducted in accordance with the Standard Operating Procedure (SOPs) (as described in Section 7.1), and are recorded manually in a field logbook, field sampling form, and/or process monitoring checklist, or recorded automatically by stationary or handheld data loggers and transmitted to a database using a telemetry system. Periodic field audits by experienced staff will be conducted to verify that SOPs are being followed. Equipment calibration will follow manufacturers' recommendation to ensure data quality. Manually recorded data will be entered into a field database. In addition, process monitoring and control data generated in facilities/plants will be automatically recorded into a data historian that resides in the plant control system. The data will be maintained in a database and reviewed by an experienced field staff member or chemist. Historical trends, water quality data, and well construction details will also be made available to the field crew so that anomalous data (compared to historical values) can be identified in a timely manner and field verified/corrected after consulting with an experienced scientist or chemist, as appropriate.

Onsite Laboratory Data

Certain testing for process control monitoring will be performed at an onsite laboratory in accordance with site-specific SOPs (see Section 7.1 and Appendix A). Onsite lab measurements include Cr(VI), Cr(T), ferrous iron (Fe[II]), conductivity, turbidity, pH, nitrate, sulfate, alkalinity, total organic carbon, orthophosphate, manganese, and total dissolved solids. Additional measurements could be added in the future.

The onsite lab data will be recorded in a bench log book and entered into a spreadsheet and/or database periodically. Although the onsite data will not be validated using the same procedures as the offsite lab data, they will be reviewed, and anomalous results will be reviewed, and if needed, reanalyzed at the direction of the project chemist. After quality control (QC) review, data will be stored in a database for use by the project team.

Onsite laboratory samples will be analyzed in conjunction with offsite analysis, at a rate of 10% for Cr(VI), Cr(T), ferrous iron, conductivity, turbidity, pH, nitrate, sulfate, alkalinity, total organic carbon, orthophosphate,

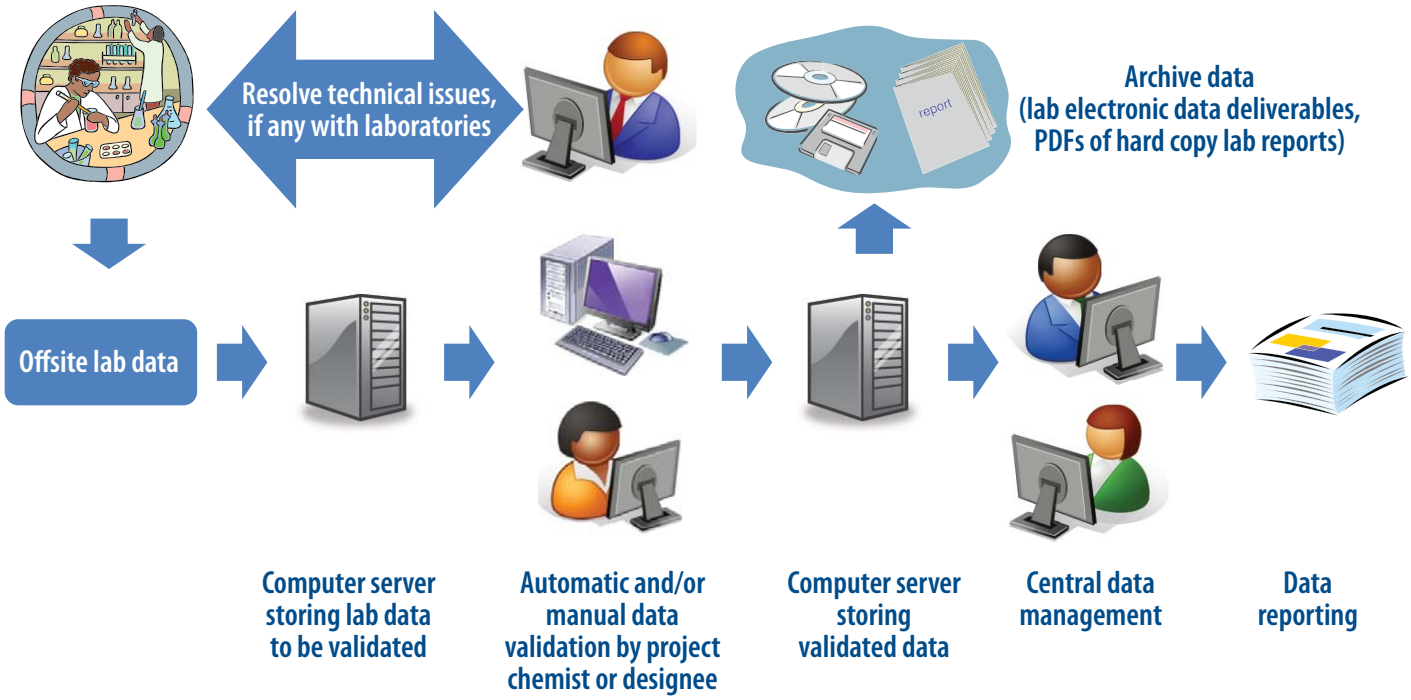

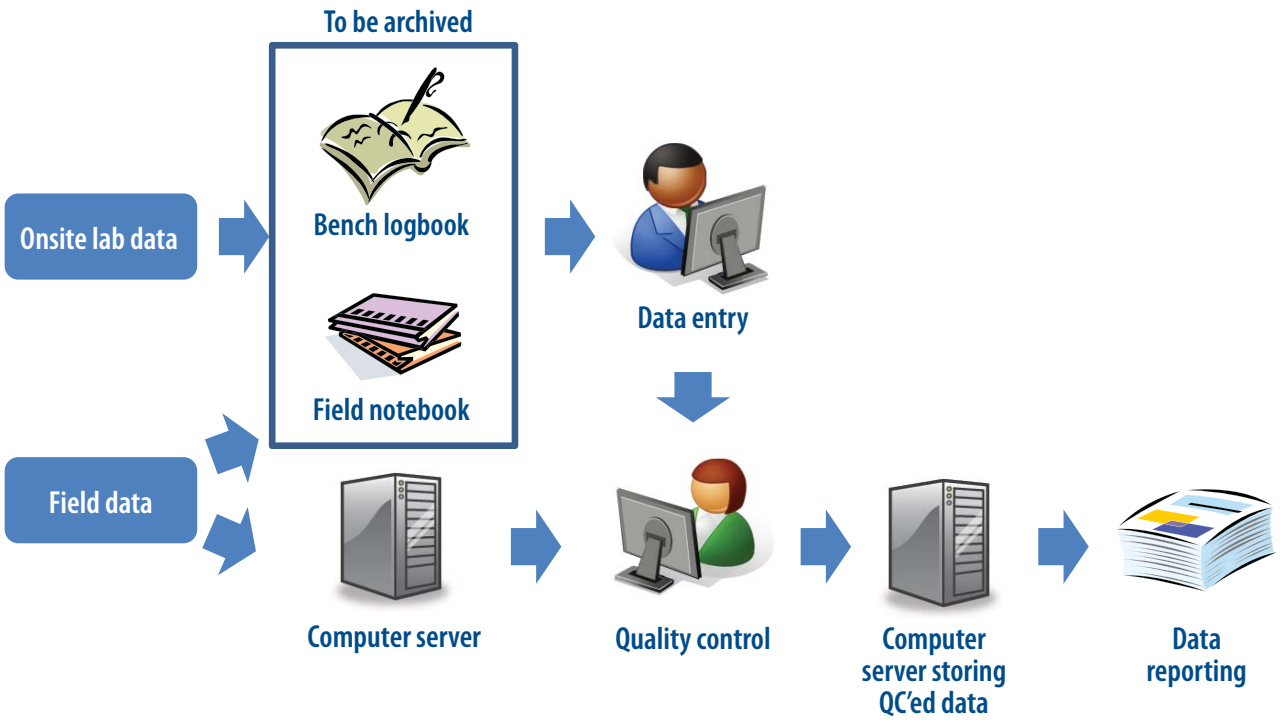

Exhibit 6.3-1
Simplified Data Management Process
Groundwater Remedy Operation and Maintenance Manual
Volume 2: Sampling and Monitoring Plan
PG&E Topock Compressor Station, Needles, California

manganese, and total dissolved solids. Data will be reviewed/compared for quality and accuracy and reported to the agencies. The frequency of comparative analysis will be evaluated after assessment of data.

Offsite Laboratory Data

The data flow (electronic and hard copy) from offsite laboratory to the project chemist is tracked to ensure that the data are reviewed and validated in a timely manner. The project chemist will discuss and resolve technical issues, if any, with the laboratory. Electronic data will be entered into a database where they will undergo QC checks before being validated. Validated data will be stored in a database for use by the project team. The laboratory will maintain electronic and hardcopy records sufficient to re-create each analytical event. At a minimum, the laboratory will maintain the following records:

- Raw data, including instrument printouts, bench work sheets, and chromatograms, with compound identification and quantitation reports.
- Laboratory-specific, written SOPs for each analytical method and quality assurance/quality control (QA/QC) function implemented during the analysis of project samples.

In compliance with Section XXV of the CD (DOI 2013), PG&E will maintain offsite laboratory records for 10 years following receipt of certification of completion. At the conclusion of the record retention period, PG&E will notify DOI and DTSC in writing at least 90 days prior to the destruction of any records and will provide DOI and DTSC with the opportunity to take possession of any records.

Maintenance Records

It is the responsibility of the plant/system operators to incorporate regular preventative maintenance into the routine work schedule based on guidelines presented in this plan, and the maintenance recommendations provided in the manufacturer's manual for each piece of equipment in the plant. Computerized maintenance management programs will be implemented at the facility, as appropriate, to keep track of maintenance requirements. In those cases, operators will access the program to determine required maintenance tasks. Records documenting completion of preventative maintenance tasks will be kept onsite.

Hardcopy and electronic versions will be archived in project files, on electronic archive tapes, and/or on other electronic storage media for the duration of remedy operation as specified below in Section 6.4. All electronic data will be subject to routine back-up until it is archived for long-term retention.

6.4 Recordkeeping

In compliance with Section XII of the 1996 CACA (DTSC 1996) and Section XXV of the RD/RA CD (DOI 2013), PG&E will maintain all records for 10 years following receipt of certification of completion. At the conclusion of the record retention period, PG&E will notify DOI and DTSC in writing at least 90 days prior to the destruction of any records and will provide DOI and DTSC with the opportunity to take possession of any records.

6.5 Reporting

In compliance with Attachment 7 of the 1996 CACA (DTSC 1996), Section XXIV and Appendix C of the CD Scope of Work and Section 5 of the RD/RA CD (DOI 2013), progress reports will be submitted monthly during RA construction and quarterly after the remedy has been implemented and demonstrated to be operating as intended. Exhibit 6.5-1 presents a quarterly report template that was developed with guidance from the *O&M Report Template for Ground Water Remedies (with Emphasis on Pump and Treat Systems)* (USEPA 2005). A monthly construction report template is included in the Construction/Remedial Action Work Plan (CH2M HILL 2015b) that is being submitted concurrently with the final design documents (see Exhibit 2.3-2 of the Work Plan). It is noted that the agencies may request additional information or reports as the remedy progresses.

Communications on changes to the monitoring program or operational adjustments will be communicated with the agencies in the quarterly reports (see Exhibit 6.5-1).

PG&E Topock Compressor Station Groundwater Remediation Project Quarterly Progress Report for Remedy Operation and Maintenance [*Indicate Reporting Period*]

Table of Contents

1.0 Introduction

PG&E is implementing the groundwater remedy to address chromium in groundwater at Solid Waste Management Unit (SWMU) 1/Area of Concern (AOC) 1 and AOC 10 near the Topock Compressor Station, in conformance with the requirements of the Resource Conservation and Recovery Act (RCRA) Corrective Action and the Comprehensive Environmental Response, Compensation, and Liability Act (CERCLA). The groundwater remedy includes:

- Construction of an In-situ Reactive Zone (IRZ) along National Trails Highway (NTH) using a line of wells that may be used as both injection and extraction wells to circulate groundwater and distribute an organic carbon source to promote reduction of the Cr(VI) to Cr(III).
- Flushing accomplished through a combination of fresh water injection and injection of carbon-amended water in wells upgradient of the plume.
- Extraction wells near the Colorado River to provide hydraulic capture of the plume, clean up the floodplain downgradient of the NTH IRZ, and enhance the flow of contaminated groundwater through the IRZ line.
- East Ravine Extraction Wells in the eastern (downgradient) end of the East Ravine to provide hydraulic capture of contaminated groundwater in bedrock; and Transwestern Bench Extraction Wells in the area northeast of the TCS to accelerate capture of Cr(VI) impacted groundwater from the alluvial deposits located downgradient of the TCS.
- Institutional controls to restrict surface land uses and prevent the use of groundwater.
- Monitored natural attenuation (MNA) as a long-term component to address residual Cr(VI) that may remain in recalcitrant portions of the aquifer after enhanced in-situ treatment.

The Remedial Action Objectives (RAOs) for the groundwater remedy are to:

1. Prevent ingestion of groundwater as a potable water source having Cr(VI) in excess of the regional background concentration of 32 micrograms per liter (µg/L).
2. Prevent or minimize migration of total chromium (Cr[T]) and Cr(VI) in groundwater to ensure concentrations in surface water do not exceed water quality standards that support the designated beneficial uses of the Colorado River (11 µg/L Cr[VI]).
3. Reduce the mass of Cr(T) and Cr(VI) in groundwater at the site to achieve compliance with ARARs in groundwater. This RAO will be achieved through the cleanup goal of the regional background concentration of 32 µg/L of Cr(VI).
4. Ensure that the geographic location of the target remediation area does not permanently expand following completion of the remedial action.

The completion criteria or performance standards for the groundwater remedy is mainly driven by RAO #3, reducing Cr(VI) concentrations throughout the plume to concentrations of 32 µg/L or less. Attainment of the completion criteria or achievement of performance standards, Cr(VI) concentrations of 32 µg/L or less, is intended to be applied throughout the area of contaminated groundwater. In establishing this criterion, the following are recognized:

- Attaining the cleanup criteria of 32 µg/L Cr(VI) in groundwater may be through active remediation or through MNA after active remediation has been employed and optimized.
- Different areas of the plume may reach the cleanup criteria of 32 µg/L Cr(VI) in groundwater at different times

In compliance with the 1996 CACA (Attachment 6, Part B, Section 12 and Attachment 7) and the RD/RA CD, Appendix C, Section 5 this quarterly report describes activities taken to implement the Corrective Measure/Remedial Action since last reporting period and activities planned for the next reporting period, presents available results from sampling and testing since last reporting period, summarizes progress towards attaining the RAOs, any issues encountered/deviations

EXHIBIT 6.5-1
Quarterly Progress Report Template
Groundwater Remedy Operation and Maintenance Manual
Volume 2: Sampling and Monitoring Plan
PG&E Topock Compressor Station, Needles, California *PAGE 1 OF 2*

from design documents, O&M Manual, and Construction/Remedial Action Work Plan, and any optimizations and enhancements. In addition, this report discusses personnel changes and summarizes activities performed and activities planned in support of DTSC's Community Outreach Plan, DOI's Community Involvement Plan, and any contacts with local community, representatives of the press, and stakeholders/Tribes.

2.0 Operations Summary

Describe routine and non-routine system downtime, operational data (listed below) and process monitoring data (listed below) (including percentage of time treatment systems were operational on a monthly basis, quantity of water recovered for treatment/recirculated for in-situ remedy, as well as cumulative total, quantity of ethanol injected, etc.), utilities and consumables used and waste handling/disposal, any issues encountered with system operation, any personnel changes, any system optimizations and maintenance that were performed, and any material deviations from design documents, O&M Manual, and Construction/Remedial Action Work Plan.

- In-situ remediation – *Volume of water recirculated, volume of ethanol (or other carbon substrate) injected, volume of well rehabilitation chemicals used, carbon amendment system monitoring data (as needed)*
- Freshwater supply – *Volume of water extracted and injected, percentage of time the extraction pumps were operating on a monthly basis*
- Remedy-produced water management – *Volume of water managed through the conditioning process, percentage of time the conditioning system was operational on a monthly basis*

3.0 Performance Summary

Describe monitoring events and sampling performed during the current reporting period, the sampling results and interpretation of results (including volume of water collected and treated, Cr(VI) mass treated, influent-effluent data, etc., where applicable), an evaluation of the hydraulic control of the plume, an interpretation of progress toward RAOs, and any material deviations from design documents, O&M Manual, and Construction/Remedial Action Work Plan (e.g., gaps or inconsistencies in the site conceptual model)

- In-situ remediation
- Freshwater supply
- Remedy-produced water management
- *Material changes to the model including updates and recalibrations will be noted in the corresponding quarterly report, and presented in detail in the annual report*.

4.0 Green Remediation Evaluation Matrix (GREM) Summary

Summarize the O&M GREM and any changes since last reporting period.

5.0 Summary of Activities in Support of the Community Relations Plan and Contacts with the Press, Local Community, and Stakeholders/Tribes

Summarize activities performed in support of DTSC's Community Outreach Plan and DOI's Community Involvement Plan, as well as contacts with local community, representatives of the press, and stakeholders/Tribes, if any.

6.0 Recommendations

Provide suggestions for system optimizations or procedural enhancements, as applicable, to improve performance, reduce costs, reduce wastes, etc. Optimizations and/or enhancements could be based on system inefficiencies, technological developments, modified regulations, etc. If applicable, discuss whether or not recommendations from the previous quarter were adopted and if not, why not.

7.0 Planned Activities for Next Reporting Period

Provide planned activities of the next reporting period (O&M activities, groundwater/surface monitoring events, activities in support of the Community Relations Plan, etc.)

8.0 References

EXHIBIT 6.5-1 (Continued)
Quarterly Progress Report Template
Groundwater Remedy Operation and Maintenance Manual
Volume 2: Sampling and Monitoring Plan
PG&E Topock Compressor Station, Needles, California PAGE 2 OF 2

SECTION 7

Sampling Methods and Procedures

Sampling and field measurements will be performed in accordance with the Standard Operating Procedures presented in Appendix A. Required sample containers, preservation requirements, sample storage, and QC methods and requirements are described in further detail in the PG&E Program QAPP (CH2M HILL 2012b) and QAPP Addendum (see Appendix B).

In continued efforts to integrate sustainability practices into remedial implementation (see Section 4 of the Final BOD Report), trials of alternative sampling and data collection methods have been conducted at Topock to further reduce the overall sampling and project footprint and minimize potential impacts to sensitive resources (e.g., reduce trips to well sites, reduce purge water generation and management, reduce time spent at well sites, etc.). Sections 7.1 and 7.2 discuss these trial efforts. Trial results have been evaluated and the resulting information incorporated into the sampling and monitoring for the final remedy, as appropriate.

Additional SOPs may be developed and added to the lists below, or existing SOPs may be modified and amended. The latest version of the SOPs will be available to the sampling crews at the Operations Facility (located at the Transwestern Bench), and in project files onsite. Material changes to the SOPs will be reported in the quarterly progress reports. For administrative changes to the SOPs, such as changes in point of contact information, a log of changes will be maintained by PG&E. For efficiency, administrative changes will be bundled and/or opportunistically combined with updates to incorporate material changes. Current SOPs and change logs will be made available on a SharePoint site for reference by agencies, stakeholders, and Tribes.

7.1 Field/On-site Lab Measurements

Field measurements will be collected in accordance with the following SOPs (included in Appendix A). Additional SOPs may be added as appropriate.

- SOP-A7 – Water Level Measurements
- SOP-A8 – Field Water Quality Measurements Using a Flow-through Cell
- SOP-A9 – Calibration of Field Instruments
- SOP-A11 – Total Depth Measurements
- SOP-A12 – Field Water Quality Measurements for Grab Samples
- SOP-A22 – Procedures for Calculation of Freshwater Equivalent Heads
- SOP-B16 – Field-Portable X-Ray Fluorescence Soil Sampling
- SOP-C1 – Solinst Pressure Transducers
- SOP-C2 – Pressure Transducer Upload to Topock Database

In addition, on-site laboratory measurements will be performed to assist with remedy process evaluation and monitoring of in-plant treatment performance (e.g., within the remedy-produced water conditioning plant); these measurements are not intended for formal reporting, but rather to provide operators with operational information to adjust or optimize system performance as needed. Only validated results from certified laboratories will be used for reporting purposes. Onsite lab measurements will be conducted in accordance with the following SOPs (included in Appendix A); additional SOPs may be added as appropriate:

- SOP-L1 – Hexavalent Chromium Analysis by Hach Method 1560
- SOP-L2 – Ferrous Iron Analysis by Hach Method 8146
- SOP-L3 – Total Chromium Analysis by Hach Method 8024
- SOP-L4 – Conductivity Analysis by Hach Method 8160
- SOP-L8 – Matrix Spike Preparation
- SOP-L9 – pH Measurement
- SOP-L10 – Hach Model 2100P Turbidimeter Calibration and Analysis Procedures
- SOP-L13 – Nitrate Analysis by Hach Method 8171

- SOP-L14 – Sulfate Analysis by Hach Method 8051
- SOP-L15 – Alkalinity Analysis
- SOP-L16 – Total Organic Carbon Analysis by Hach Method 10129
- SOP-L17 – Orthophosphate Analysis by Hach Method 8048
- SOP-L18 – Manganese Analysis by Hach Method 8149
- SOP-L19 – Total Dissolved Solids Analysis

Equipment-specific and site-specific training will initially be provided by senior on-site personnel (experienced field personnel) familiar with the necessary techniques for proper use and calibration of on-site equipment. Field personnel will be trained on the appropriate procedures by the experienced field personnel using SOPs and equipment manufacturer's manuals as primary references. Periodic audits and training will be conducted by the project manager and project chemist. This practice will continue for remedy monitoring.

Field versus Standard Laboratory-certified Analyses

The following discussion is presented in response to a comment received on the 30% design document regarding comparison of field vs. laboratory measurement for Cr(VI).

The Hualapai comment stated that "Comparison of data from the Upland ISPT suggests field-analyzed Cr(VI) concentrations were greater than laboratory-analyzed Cr(VI) concentrations. This appears to be linked to high TOC concentrations in the water samples (Figure 2)." There could be many possible reasons that the subject Cr(VI) data may appear to suggest that additional reduction is occurring after field collection; however, if samples were filtered and preserved in the field, no additional reduction should occur. Regardless, based on examination of the cited data, possible reasons for the elevated field results and potential remedial solution(s) include, but are not limited to, the following:

- The samples analyzed in the field were probably not filtered and low levels of suspended matter (turbidity) caused elevated results. The remedial solution is to filter all Cr(VI) samples in the field (this will be accomplished by following SOP-L1, Hexavalent Chromium Analysis by Hach Method 1560).
- Although the field Cr(VI) colorimetric method is considered fairly robust, there is always the remote possibility of a false positive reaction occurring. The remedial solution requires identifying the issue first. Once identified, a series of steps can be performed to clarify/overcome the issue. Analyzing a matrix spike can often clarify the problem and analyzing a serial dilution can often overcome the issue. This is addressed in SOP-L1, Hexavalent Chromium Analysis by Hach Method 1560.
- If the samples collected for laboratory analysis were not field filtered and preserved, there is a possibility of further reduction prior to the analysis. The remedial solution is to follow SOP A6, Sample Field Filtration and Preservation for Metals Analyses and follow proper transport and storage procedures.

As for the Technical Review Committee (TRC) comment regarding "Other potentially unstable constituents," because sulfide (S[II-]) is so unstable in the environment and is difficult to use in a systematic way, it will not be used for monitoring the remedial system on a regular basis and will primarily be a field analysis if used for "additional knowledge." However, if preserved at the time of collection, it can be transported to a lab for analysis without additional reactions occurring. Unlike Cr(VI) and S(II-), Fe(II) cannot be preserved and has a very short holding time. However, by filtering and preserving the sample we remove all the ferric iron Fe(III) (primarily found in a solid form) and only have Fe(II) remaining, thus allowing Fe(II) to easily be transported and analyzed in the lab.

Data Telemetry System

To reduce the sampling footprint and minimize potential impacts to sensitive resources, trials of data telemetry systems have been conducted at Topock since 2011 with an eye towards potential integration into remedial implementation (see Exhibit 7.1-1). Telemetry systems can provide near-real-time access to data with data transmission intervals as short as one minute via cellular or satellite signals. Units can generate email alerts when user-defined minimum or maximum parameters, such as temperature or pressure, are exceeded or if a system

fails to transmit data according to schedule. The trial consisted of five telemetry units from two separate manufacturers deployed at five different well cluster locations on the site. Three of the units were from YSI's EcoNet remote telemetry line of devices while the remaining two were Solinst STS-9100 telemetry devices.



EXHIBIT 7.1-1
Pictures of Telemetry Units Used During Trial
Groundwater Remedy Operation and Maintenance Manual
Volume 2: Sampling and Monitoring Plan
PG&E Compressor Station, Needles, California

All five telemetry systems are solar-powered. While the telemetry trial included only these devices, additional systems or sensors may be tested in the future due to the rapidly evolving nature of telemetry technology. In addition to water level measurement transducers, the trial also tested telemetry of other in-well water quality data relevant to in-situ remediation. A multi-parameter water quality probe was used for in-well measurements when not in use above-ground for water quality measurement during well purging. This “sonde” type probe fits inside 2-inch monitoring wells or in flow-through cells and measures specific conductance, dissolved oxygen, ORP, and pH, as well as measuring temperature and pressure like typical water level transducers.

The telemetry system trial demonstrated success in:

- Automating the data retrieval process, allowing for efficient data collection, management, and access
- Reducing field labor, on-site footprint and fuel use, and activity in the vicinity of floodplain nesting habitat (because telemetry-equipped wells are currently accessed for quarterly salinity profiling or as-needed equipment maintenance, not for routine manual downloads)
- Increasing data quality/reliability (because transducer equipment failure is evident from telemetry data, rather than detected only after weekly or monthly manual downloads)
- Compatibility with existing and planned future infrastructure
- Use of various power source options, including solar-charged 12V marine batteries which minimize the amount of conduit runs and the number of field visits for battery maintenance
- Blending in with the natural surroundings so as to minimize visual impact to the site

7.2 Surface Water, Groundwater, and Process Water Sampling

Surface water, groundwater, and process water sampling will be performed in accordance with the following SOPs (included in Appendix A) (note that SOP-A7, SOP-A8, SOP-A9, and SOP-A11 are listed above in Section 7.1 and are also applicable to surface water/groundwater/process water sampling). Additional SOPs may be added as appropriate.

- SOP-A1 – Purging and Sampling of Groundwater Monitoring Wells, Well-Volume Method
- SOP-A2 – Purging and Sampling of 1-inch-diameter Groundwater Monitoring Wells, Modified Well-Volume Method
- SOP-A3 – Purging and Sampling of Active and Inactive Water Supply Wells
- SOP-A4 – Depth-Specific Surface Water Sampling (supersedes SOP-A12)
- SOP-A5 – Groundwater Sampling from Sonic Drilling Boreholes
- SOP-A6 – Sample Field Filtration and Preservation for Metals Analyses
- SOP-A10 – Decontamination of Water Sampling Equipment
- SOP-A13 – Spill Prevention, Containment, and Control Measures for Monitoring Well Sampling
- SOP-A14 – Pore Water Sampling
- SOP-A16 – Access Routes
- SOP-A17 – Groundwater and Surface Water Mobile Integrated Sample Tracking
- SOP-A18 – Purging and Sampling of Groundwater Wells Minimal Drawdown Method
- SOP-A19 – Sampling of Groundwater Monitoring Wells Hydrasleeve No Purge Method
- SOP-A23 – Sample Handling and Custody

- Remedy-SOP-01 – Process Water Sampling
- Remedy-SOP-02 – Safe Fueling and Fuel Handling Policy

In continued efforts to integrate sustainability practices into remedial implementation (see Section 4 of the Final BOD Report), PG&E has conducted a trial of alternative groundwater sampling approaches at Topock to further reduce the overall sampling footprint (e.g., reduce purge water generation and management, reduce time spent at each well, minimize potential impacts to sensitive resources) while maintaining or increasing data quality.

The trial began in third quarter 2012 (September) and continued through first quarter 2013; it involved testing of two alternative sampling approaches at 18 site wells: the no-purge HydraSleeve™ sampling system and the minimal drawdown (low flow purging) sampling technique. Additional information about these two approaches can be found in numerous publications and public websites including but not limited to the following:

- HydraSleeve™ sampling system (www.hydrasleeve.com): A joint study completed by the U.S. Army Corps of Engineers, the Air Force Center for Environmental Excellence and the Air Force Real Property Agency in 2005 (Parsons 2005)
- Minimal drawdown (low flow purging or micro-purge) sampling technique: USEPA guidance on sampling procedures including the *Groundwater Issue Paper: Low-Flow (Minimal Drawdown) Ground-Water Sampling Procedures* (Puls and Barcelona 1996) and the *Groundwater Sampling Guidelines for Superfund and RCRA Project Managers* (USEPA 2002)

Trial results were compared to the current standard three-volume purge technique, and evaluated for use in monitoring of the final groundwater remedy. The 2013 Annual Groundwater Monitoring Report (CH2M HILL 2014a; available on the project website at http://dtsc-topock.com/) presented the trial results (see Recommendations section and Appendix H) along with detailed correlations between the two alternative sampling methods and the current three-volume purge method.

Based on the trial results, PG&E recommended to DTSC the use of micro-purge as the default sampling method for the existing groundwater monitoring and compliance monitoring programs. While micro-purge was recommended for groundwater/compliance monitoring, HydraSleeve and other grab sampling methods are also seen as useful tools for process monitoring during remedy implementation. DTSC completed review of PG&E's recommendations on June 26, 2014, and approved the use of micro-purge techniques for wells with screen length of up to 20-foot saturated thickness in alluvial and fluvial sediments (upland and floodplain locations) (DTSC 2014). Additional trials using alternative sampling techniques may be conducted at monitoring wells with 30- to 50-foot screen lengths, and at bedrock open borehole wells located in TCS or the East Ravine. Implementation of the micro-purge technique commenced in the third quarter of 2014. SOPs associated with these alternative techniques have been included in Appendix A.

7.3 Sample Containers, Preservation, and Storage

The contracted analytical laboratory will provide the required sample containers for all samples including QC samples. All containers will have been cleaned and certified free of the analytes of concern for this project. No sample containers will be reused. The contracted laboratory will add preservatives, if required, prior to shipping the sample containers to the field or supply the preservative as appropriate. The laboratory, upon receipt of the samples, will verify and record the adequacy of preservation and will add additional preservative, if necessary.

The containers, minimum sample quantities, required preservatives, and maximum holding times for many parameters are shown in Table 7.3-1. Table 7.3-1 includes a list of sample containers, preservation, and holding times for analytes anticipated to be monitored during operation and maintenance of the remedy (see Sections 2 through 4).

7.4 Sampling Documentation and Shipment

Pre-preserved sample containers will be received from the laboratory. The laboratory markings will indicate the type of preservative in the container. The date and time of sampling and the initials of the sampler will be recorded on the pre-printed label immediately prior to collection. The waterproof labels will be placed carefully on the proper container, and if waterproof labels are unavailable, they will be secured using clear tape to protect the label. When shipping samples using a freight carrier such as Federal Express, the ice used in shipping containers will be double-bagged and laser printed labels and indelible ink pens will be used to complete sample labels to ensure that the samples arrive at the laboratory dry and appropriately marked. If a laboratory courier is used, no bagging of ice is necessary. Vital information regarding the collection of each sample will be recorded in a field logbook, field sampling form, and/or chain-of-custody (CoC) form, as appropriate.

Logbooks will be bound with consecutively numbered pages. All entries will be legibly written in black or blue ink and signed and dated by the individual making the entries. Factual and objective language will be used. All entries will be complete and accurate to allow reconstruction of each field activity. A line will be placed through any portion of a field notebook that is unused. One line strike-through will be used to show corrections to entries. The strike-through will be initialed and dated. No correction fluid will be used. The following information for each sample will be recorded in the field logbook, field sampling form, or CoC form, whichever is appropriate:

- Sampling location and description (sketch and measured distances from reference points will be recorded if there is no established identification for the sample location)
- Sample ID
- Sampler's name
- Date and time of sampling
- Sample designation (e.g., composite, grab, etc.)
- Sample matrix
- Type and ID of sampling equipment
- Field measurement data (e.g., pH, temperature, conductivity)
- Field observations that may be relevant to the analysis or sample integrity (e.g., odor, color, and weather conditions)
- Associated QC blanks
- Shipping details (if the laboratory is providing courier service, the courier must sign and date the CoC forms; copies of the signed CoC forms should be transmitted to the office as soon as practical; if FedEx, UPS, or other courier is used, include shipping information for each shipment)
- Destination laboratory

Sample coolers will be transported to the laboratory immediately after sample collection. An overnight courier may be used to transport the samples. Intermediate stops will be avoided, except for emergencies, in which case the situation will be noted in the field notebooks. The laboratory will be notified that samples are being shipped.

7.5 Quality Control

Laboratory QC checks indicate the state of control that prevailed at the time of sample analysis. QC checks that involve field samples, such as matrix and surrogate spikes and field duplicates, also provide an indication of the presence of matrix effects. Field-originated blanks provide a way to monitor potential contamination that field samples are subjected to. The QAPP and QAPP Addendum specify requirements for method blanks, laboratory control samples (LCSs), surrogate spikes, and matrix spike/matrix spike duplicates (MS/MSDs) that must be followed by subcontracting laboratories.

A laboratory QC batch is defined as a method blank, LCS, MS/MSD, or a sample duplicate (depending upon the method) and 20 or fewer environmental samples of similar matrix that are extracted or analyzed together. For gas chromatography/mass spectrometry volatile analyses, a method blank, LCS, and MS/MSD must be analyzed in each 12-hour calibration period. The number of environmental samples allowed in the laboratory QC batch is defined by the remaining time in the method-prescribed 12-hour calibration period divided by the analytical run time. Each preparation or analytical batch will be identified in a way that will associate environmental samples with the appropriate laboratory QC samples.

The laboratory will maintain a quality assurance manual or equivalent document. The manual will include all of the requirements provided in the California Environmental Laboratory Accreditation Program (ELAP), and, if applicable, the National Environmental Laboratory Accreditation Program (NELAP).

The laboratory will also maintain SOPs for all analytical methods and laboratory operations. The format for SOPs will conform with the following:

- *Test Methods for Evaluating Solid Waste, Physical and Chemical Methods, SW-846, Third Edition, Update III, Section 1* (USEPA 1996)
- "Good Laboratory Practices" in *Principles and Guidance to Regulations for Ensuring Data Integrity in Automated Laboratory Operations* (USEPA 1995)

All SOPs will have a unique identification number that is traceable to previous revisions of the same document.

TABLE 7.3-1
Sample Containers, Preservation, and Holding Times
Groundwater Remedy Operation and Maintenance Manual
Volume 2: Sampling and Monitoring Plan
PG&E Topock Compressor Station, Needles, California

Analyte	Method	Container and Minimum Quantity		Preservation	Holding Time
		Water	Soil/Sediment		
Metals (except hexavalent chromium)	SW6010B, SW6020A, EPA200.7, EPA200.8, SM3120B, EPA245.1, SW7000 series methods	1-liter P or G	8-oz P, G, or T	Water: Add HNO_3 to pH<2; soil/sediment: None	28 days for mercury; 180 days for all others
Hexavalent Chromium	SW7199	Not applicable	4-oz P, G, or T	Soil/sediment: Chill to 4°C (±2°C)	Soil: 30 days to extraction, 7 days to analysis
Hexavalent Chromium	EPA218.6	250-mL P	Not applicable	Chill to ≤6°C Laboratory or field filtration within 24 hours. After filtration adjust the pH to 9–9.5 by adding $(NH_4)_2SO_4/NH_4OH$ buffer solution	28 days
Hexavalent Chromium	SM3500-Cr B	250-mL P	Not applicable	Chill to ≤6°C Laboratory or field filtration within 24 hours. After filtration adjust the pH to 9–9.5 by adding $(NH_4)_2SO_4/NH_4OH$ buffer solution	28 days
Pesticides	SW8081A or B	Two 1-liter Amber G	8-oz G or T	Chill to 4°C (±2°C)	Water: 7 days to extraction; 40 days to analysis Soil: 14 days to extraction; 40 days to analysis 90 days to extraction if frozen to -10°C (±2°C)
VOCs	SW8260B or C Preparation methods: SW5035B (Soil) SW5030B (Water)	Three 40-mL G-TLC	Three 40-mL G-TLC	Water: Add HCl to pH<2; chill to 4°C (±2°C) Soil/sediment: Chill to 4°C (±2°C) or: • Frozen in 48 hours • Frozen onsite • Sodium bisulfate • Methanol	Water: 14 days (preserved); 7 days (unpreserved) Soil: 48 hours unless preserved with 48 hours 14 days if solid samples preserved by the following methods: • 4ºC/frozen in 48 hours • Frozen onsite • Sodium bisulfate • Methanol

TABLE 7.3-1
Sample Containers, Preservation, and Holding Times
Groundwater Remedy Operation and Maintenance Manual
Volume 2: Sampling and Monitoring Plan
PG&E Topock Compressor Station, Needles, California

		Container and Minimum Quantity			
Analyte	**Method**	**Water**	**Soil/Sediment**	**Preservation**	**Holding Time**
Herbicides	SW8151A	Two 1-liter Amber G	8-oz G or T	Chill to 4°C (± 2°C)	Water: 7 days to extraction; 40 days to analysis Soil: 14 days to extraction; 40 days to analysis
PAH	SW8270SIM	Two 1-liter Amber G	8-oz G or T	Chill to 4°C (±2°C)	Water: 7 days to extraction; 40 days to analysis Soil: 14 days to extraction; 40 days to analysis
Ammonia	EPA350.1 Revision 2 or SM4500-NH3	1-liter P or G	4-oz P, G, or T	Water: Add H_2SO_4 to pH<2; chill to ≤6°C Soil/sediment: 4°C (±2°C)	Water: 28 days Soil: Not available
Anions	EPA300.0 or SM4500	500-mL P or G	4-oz P, G, or T	Chill to ≤6°C (none required for chloride and fluoride) Ortho-Phosphate requires filtering within 15 minutes after sample collection	Bromide, chloride, fluoride, sulfate, and iodide in 28 days Nitrate and ortho-Phosphate in water 48 hours
Alkalinity (total, bicarbonate, carbonate, hydroxide)	EPA310.2 or SM2320 B	500-mL P or G	Not applicable	Chill to ≤6°C	14 days
TDS	SM2540 C	500-mL P or G	Not applicable	Chill to ≤6°C	7 days
TSS	SM2540 D	500-mL P or G	Not applicable	Chill to ≤6°C	7 days
Turbidity	EPA180.1 Revision 2 or SM2130	500-mL P or G	Not applicable	Chill to ≤6°C	48 hrs
Specific Conductance	EPA120.1 Revision 1, or SM2510 SW9050	500-mL P or G	4-oz P, G, or T	Chill to ≤6°C Soil/sediment: Chill to 4°C (±2°C)	28 days
pH	SM4500H+B or SW9040	500-mL P or G	4-oz P, G, or T	Chill to ≤6°C	15 minutes
TOC/DOC	SM 5310 C	500-mL G or 40-mL VOA	4-oz P, G, or T	Water: For 500-ml: Add H_2SO_4 to pH<2; chill to ≤6°C For 40-mL VOA: Add H_2PO_4 to pH<2; chill to ≤6°C	28 days
TOC	Walkley Black	Not applicable	4-oz P, G, or T	Chill to ≤6°C	28 days
Sulfide	SM4500-S[2]	500-mL P or G	Not applicable	Add zinc acetate and NaOH to pH>9, chill to ≤6°C	7 days

TABLE 7.3-1
Sample Containers, Preservation, and Holding Times
Groundwater Remedy Operation and Maintenance Manual
Volume 2: Sampling and Monitoring Plan
PG&E Topock Compressor Station, Needles, California

Analyte	Method	Container and Minimum Quantity		Preservation	Holding Time
		Water	Soil/Sediment		
Ferrous Iron (Fe +2)	SM3500D	500-mL P or G	Not applicable	Chill to ≤6°C	24 hours
Dissolved Silica	EPA200.7 or SM4500-Si or SM3120 B	500-mL P only	Not applicable	Chill to ≤6°C	28 days
18O and deuterium	Laboratory SOP (continuous flow mass spectrometer [CF-IRMS])	100-mL P or 40-mL VOA	Not applicable	Chill to ≤6°C	6 months
Cyanide	EPA335.4 (R1) or SM4500-CN C/D/E (water) SW9010B, SW9012, or SW9014 (soil)	500-mL P or G	4-oz P, G, or T	Water: Add NaOH to pH>12; chill to ≤6°C Soil/sediment: Chill to 4°C (±2°C)	Water and soil: 14 days

Notes:

>	=	greater than	NH_4OH	=	ammonium hydroxide
<	=	less than	$(NH_4)_2SO_4$	=	ammonium sulfate
≤	=	less than or equal to	oz	=	ounce
DOC	=	dissolved organic compounds	P	=	polyethylene
G	=	glass	PAH	=	polynuclear aromatic hydrocarbons
G-TLC	=	glass with Teflon lined cap	SIM	=	selected ion monitoring
H_2PO_4	=	phosphoric acid	SO_4	=	sulfate
H_2SO_4	=	sulfuric acid	T	=	brass sleeves in the sample barrel (sometimes called California brass)
HCl	=	hydrochloric acid	TDS	=	total dissolved solids
HNO_3	=	nitric acid	TOC	=	total organic compounds
mL	=	milliliters	TSS	=	total suspended solids
NaOH	=	sodium hydroxide	VOA	=	volatile organic analytic
NH_4	=	ammonium	VOC	=	volatile organic compound

Source: CH2M HILL. 2012b. *PG&E Program Quality Assurance Project Plan*. Revision 2. August.

SECTION 8

References

ARCADIS. 2009. *Human and Ecological Risk Assessment of Groundwater Impacted by Activities at Solid Waste Management Unit (SWMU) 1/Area of Concern (AOC) 1 and SWMU 2, Topock Compressor Station, Needles California.* November 13.

Arizona Department of Environmental Quality (ADEQ). 1999. *Arizona Source Water Assessment Plan Final Draft*. February 5. Online: www.azdeq.gov/environ/water/dw/download/swapplan.pdf.

_____. 2001. *Ambient Groundwater Quality of the Sacramento Valley Basin: A 1999 Baseline Study.* Douglas C. Towne and Maureen C. Freark. Maps by Larry W. Stephenson. Arizona Department of Environmental Quality Open File Report 2001-04. Water Quality Division, Hydrologic Support & Assessment Section, Groundwater Monitoring Unit, 3033 North Central Avenue, Phoenix, Arizona 85012.

California Department of Toxic Substances Control (DTSC). 1996. *Corrective Action Consent Agreement (Revised), Pacific Gas and Electric Company's Topock Compressor Station, Needles, California.* EPA ID No. CAT080011729. February 2.

_____. 2009. Letter to Ms. Yvonne Meeks/PG&E. "Acceptance of Final Groundwater Risk Assessment Report, Topock Compressor Station, Needles, California (EPA ID NO. CAT080011729)." December 10.

_____. 2011a. *Statement of Basis for Groundwater Remedy at Pacific Gas and Electric Company, Topock Compressor Station, Needles, San Bernardino County, California*. EPA ID No. CAT080011729. January 31.

_____. 2011b. *Final Environmental Impact Report for the Topock Compressor Station Groundwater Remediation Project*. January 31.

_____. 2014. Email from Chris Guerre/DTSC to Yvonne Meeks/PG&E. Subject: PG&E Topock: DTSC response to Section 7 2013 Annual Report Recommendations. June 27, 2014.

CH2M HILL. 2005. *Sampling, Analysis, and Field Procedures Manual, PG&E Topock Program*. March 31.

_____. 2009a. Revised *Final RCRA Facility Investigation/Remedial Investigation, Volume 2— Hydrogeologic Characterization and Results of Groundwater and Surface Water Investigation Report, Pacific Gas and Electric Company (PG&E), Topock Compressor Station, Needles, California.* February 11.

_____. 2009b. *Final RCRA Facility Investigation/Remedial Investigation Report, Volume 2 Addendum— Hydrogeologic Characterization and Results of Groundwater and Surface Water Investigation, Pacific Gas and Electric Company, Topock Compressor Station, Needles, California*. June 29.

_____. 2012a. *Freshwater Source Evaluation Technical Memorandum, PG&E Topock Station, Needles, California*. April 27.

_____. 2012b. *PG&E Program Quality Assurance Project Plan. Revision 2.* August.

_____. 2012c. *Fresh Water Source Evaluation Technical Memorandum, PG&E Topock Compressor Station, Needles, California*. April 27.

_____. 2014a. *Fourth Quarter 2013 and Annual Interim Measures Performance Monitoring and Site-wide Groundwater and Surface Water Monitoring Report, PG&E Topock Compressor Station, Needles, California*. Online: http://dtsc-topock.com/sites/default/files/2013_Q4_PMP-GMP_FINAL.pdf. March 15.

_____. 2014b. *Basis of Design Report/Pre-Final (90%) Design for the Final Groundwater Remedy, PG&E Topock Compressor Station, Needles, California.* September 8.

_____. 2015a. *Supplemental Pre-Final (90%) Design for the Final Groundwater Remedy, PG&E Topock Compressor Station, Needles, California.* February 2.

_____. 2015b. *Construction/Remedial Action Work Plan for the Final Groundwater Remedy, PG&E Topock Compressor Station, Needles, California.* November 18.

Parsons. 2005. *Results Report for the Demonstration of No-Purge Groundwater Sampling Devices at Former McClellan Air Force Base, California*. Prepared for the U.S. Army Corps of Engineers, Air Force Center for Environmental Excellence, and Air Force Real Property Agency.

Puls, R.W. and M.J. Barcelona. 1996. *Groundwater Issue Paper: Low-Flow (Minimal Drawdown) Ground-Water Sampling Procedures*. U.S. Environmental Protection Agency. EPA/540/S-95/504.12 pp.

State Water Resources Control Board (SWRCB). 2013. *Topock Compressor Station: Remedy Requirements Associated with Injection of Groundwater Containing Naturally Occurring Arsenic*. November 20.

U.S. Department of the Interior (DOI). 2009. Letter to Ms. Yvonne Meeks/PG&E. "PG&E Topock Compressor Station Remediation Site – DOI Approval of the Human and Ecological Risk Assessment of Groundwater Impacted by Activities at Solid Waste Management Unit (SWMU) 1/Area of Concern (AOC) 1 and SWMU 2, Topock Compressor Station, Needles, California." December 15.

_____. 2010. *Groundwater Record of Decision, Pacific Gas and Electric Company, Topock Compressor Station, Needles, San Bernardino County, California*. ROD cover date is December 2010; signed/approved by DOI on January 20, 2011.

_____.2013. Remedial Action/Remedial Design Consent Decree (CD) between the United States of America and Pacific Gas & Electric Company. Case 5:13-cv-00074-BRO-OP, Document 23. Entered November 21.

U.S. Department of the Interior and California Department of Toxic Substances Control (DOI and DTSC). 2014. "Subject: Directives on Outstanding Issues on the Basis of Design Report/Pre-Final Design (90% Design) Supplemental Package for PG&E Topock Compressor Station Remediation Site." Letter from Pamela Innis/DOI and Aaron Yue/DTSC to Yvonne Meeks/PG&E. December 23.

U.S. Environmental Protection Agency (USEPA). 1995. *Principles and Guidance to Regulations for Ensuring Data Integrity in Automated Laboratory Operations.* August 10.

_____. 1996. *Test Methods for Evaluating Solid Waste, Physical and Chemical Methods, SW-846, Third Edition, Update III.*

_____. 2002. *Groundwater Sampling Guidelines for Superfund and RCRA Project Managers.* EPA 542-S-02-001. May.

_____. 2005. *O&M Report Template for Ground Water Remedies (with Emphasis on Pump and Treat Systems).* OSWER 9283.1-22FS, EPA 542-R-05-010. April.

_____. 2008. *A Systematic Approach for Evaluation of Capture Zones at Pump and Treat Systems*. EPA 600/R-08/003.

Appendix A
Standard Operating Procedures for Groundwater, Surface Water, and Process Water Sampling

(***Provided on CD-ROM Only***)

APPENDIX A

SOPs for Groundwater, Surface Water, and Process Water Sampling

This appendix contains the following SOPs for the Final Groundwater Remedy at Topock Compressor Station:

- Remedy-SOP-01 – Process Water Sampling
- Remedy-SOP-02 – Safe Fueling and Fuel Handling Policy
- SOP-A1 – Purging and Sampling of Groundwater Monitoring Wells, Well-Volume Method
- SOP-A2 – Purging and Sampling of 1-inch-diameter Groundwater Monitoring Wells, Modified Well-Volume Method
- SOP-A3 – Purging and Sampling of Active and Inactive Water Supply Wells
- SOP-A4 – Depth-Specific Surface Water Sampling (supersedes SOP-A12)
- SOP-A5 – Groundwater Sampling from Sonic Drilling Boreholes
- SOP-A6 – Sample Field Filtration and Preservation for Metals Analyses
- SOP-A7 – Water Level Measurements
- SOP-A8 – Field Water Quality Measurements Using a Flow-through Cell
- SOP-A9 – Calibration of Field Instruments
- SOP-A10 – Decontamination of Water Sampling Equipment
- SOP-A11 – Total Depth Measurements
- SOP-A12 – Field Water Quality Measurements for Grab Samples
- SOP-A13 – Spill Prevention, Containment, and Control Measures for Monitoring Well Sampling
- SOP-A14 – Pore Water Sampling
- SOP-A16 – Access Routes
- SOP-A17 – Groundwater and Surface Water Mobile Integrated Sample Tracking
- SOP-A18 – Purging and Sampling of Groundwater Wells Minimal Drawdown Method
- SOP-A19 – Sampling of Groundwater Monitoring Wells Hydrasleeve No Purge Method
- SOP-A22 – Procedures for Calculation of Freshwater Equivalent Heads
- SOP-A23 – Sample Handling and Custody
- SOP-B16 – Field-Portable X-Ray Fluorescence Soil Sampling
- SOP-C1 – Solinst Pressure Transducers
- SOP-C2 – Pressure Transducer Upload to Topock Database
- SOP-L1 – Hexavalent Chromium Analysis by Hach Method 1560
- SOP-L2 – Ferrous Iron Analysis by Hach Method 8146
- SOP-L3 – Total Chromium Analysis by Hach Method 8024
- SOP-L4 – Conductivity Analysis by Hach Method 8160
- SOP-L8 – Matrix Spike Preparation
- SOP-L9 – pH Measurement
- SOP-L10 – HACH Model 2100P Turbidimeter Calibration and Analysis Procedures
- SOP-L13 – Nitrate Analysis by Hach Method 8171
- SOP-L14 – Sulfate Analysis by Hach Method 8051
- SOP-L15 – Alkalinity Analysis
- SOP-L16 – Total Organic Carbon Analysis by Hach Method 10129
- SOP-L17 – Orthophosphate Analysis by Hach Method 8048
- SOP-L18 – Manganese Analysis by Hach Method 8149
- SOP-L19 – Total Dissolved Solids Analysis

Standard Operating Procedure
PG&E Topock Groundwater Remedy
Operation and Maintenance Plan

Title: Process Water Sampling

Number: Remedy-SOP-01_Rev0

Created Date: June 19, 2012

1 Background and Scope

Pacific Gas and Electric Company (PG&E) is implementing a groundwater remedy near the intersection of Park Moabi Road and Interstate 40, approximately 12 miles southeast of Needles, California at the PG&E Topock Compressor Station (TCS). This standard operating procedure (SOP) addresses the procedures to be used for collection of process water samples from the groundwater remediation system.

2 Required Documents

1. Event-specific sampling and analysis plan (SAP), work plan, or field instructions.
2. Applicable project work plan, monitoring plan, quality assurance project plan (QAPP), and/or Operation and Maintenance (O&M) Manual.
3. Topock Program Health and Safety Plan (HSP).
4. Blank sampling log and field notebook.

3 Preparation, Setup, and Sampling Procedures

1. Review event-specific SAP or event-specific field instructions, O&M Manual, and HSP.
2. Review sampling procedures and equipment and planned sample ports with field crew.
3. Inventory sample bottles, review required analyses, and understand lab courier schedule.
4. Prepare sampling log (use field notebook and summarize relevant information on sampling form).
5. Gather sample containers and equipment and mobilize to the first sample location.
6. Open the sampling port and allow enough water to flow to flush the 'off main pipe'.
7. Remove the cap of the sample container and collect the sample. Continue one container at a time, beginning with the containers for metals [including Cr(VI) and Cr(T)] and then the containers for general chemistry parameters.
8. After all containers for that sampling location have been filled, complete the sampling log sheet.
9. Repeat steps 5 through 8 for each sampling location.

Refer to the O&M Manual for sample handling and management, equipment decontamination, and waste management procedures.

Standard Operating Procedure
PG&E Topock Groundwater Remedy
Operation and Maintenance Plan

Title: Safe Fueling and Fuel Handling Policy

Number: Remedy-SOP-02_Rev0

Created Date: July 15, 2013

1 Background and Scope

Pacific Gas and Electric Company (PG&E) is implementing a groundwater remedy near the intersection of Park Moabi Road and Interstate 40, approximately 12 miles southeast of Needles, California at the PG&E Topock Compressor Station (TCS). The objective of this Standard Operating Procedure (SOP) is to describe the policy required to refuel vehicles, fuel tanks, and equipment/portable containers safely during work on and off the project site.

2 Approvals

Each vendor/contractor must obtain approval from PG&E Topock Site Operations Manager, and or Sr. Environmental Inspector of a) the planned fueling and re-fueling methods for the contracted activities to be performed at the site, and b) the commercial fuel supplier prior to first use for contracted activities.

3 Safety Guidelines During Fueling Operations

PG&E requires all vendors/contractors to follow appropriate procedures during fueling/refueling activities in order to avoid spills and incidents. The following general guidelines will be followed unless pre-approved otherwise:

Preparation, Pre-Fueling and Fueling Guidelines

- Turn off all equipment or engines before refueling.
- When fueling at a pump, remain attentive to the fuel nozzle.
- When not fueling at a fixed pump, stage splash pad containment as needed.
- Identify and locate fire extinguisher prior to fueling.
- Do not become distracted while fueling by electronic devices, reading materials, or conversations with bystanders.
- Use only UL-approved containers for portable gasoline storage cans.
- When filling a portable container, always place the container on level ground and keep the pump nozzle in contact with the container when refueling to avoid a static electricity ignition of fuel vapors. Fill slowly to avoid spillage and skin/clothing contact and use a funnel if needed.
- When fueling from a portable container, stage splash containment as needed.
- Only store fuel in locations approved by PG&E, and never near any ignition sources.

- In the event of a fire, make use of fire extinguisher that is available. If fire cannot be contained, relocate yourself to a safe location and call 911.

General Remote Fueling Considerations

- Position the fuel supply source as close to the equipment to be fueled as is practicable and safe.
- Inspect fuel conveyance hose/equipment and all connections and fittings for signs of wear or defects prior to the initiation of fuel pumping or pouring. If pouring fuel from a portable container, a funnel constructed of suitable material must be used to avoid splashing.
- Stage splash containment and fire extinguisher as needed.
- Ensure the area is free from ignition sources (i.e., hot equipment/work, sources of spark or static electricity).
- Once fueling is complete, deactivate the fuel supply pump prior to removing the fill nozzle from the equipment, and ensure that residual fuel has been emptied from the conveyance hose (as appropriate based on design of the equipment used).
- Inspect work area for any signs of spills, and remove spill pad(s), as appropriate.

3 Communication and Contingency Action

If a spill occurs the appropriate clean-up actions should commence as efficiently and safely as possible. Use a natural fiber push broom and/or a spark resistant shovel or scoop.

In addition, the reason for the spill will be investigated, and the team will modify the fueling procedure or conduct equipment repairs as determined appropriate to minimize the potential for future spills. Further, PG&E Site Operations Manager/Sr. Environmental Inspector must be notified immediately.

4 Waste Management

All waste generated during refueling, such as oily absorbent pads, must be transported and disposed of as directed by PG&E immediately following generation. Do not dispose of any oil/fuel contaminated pads or rags in the soil roll-off bins or waste dumpsters.

SOP-A1

Purging and Sampling of Groundwater Monitoring Wells
Well-Volume Method
Standard Operating Procedures for PG&E Topock Program

This standard operating procedure (SOP) addresses the procedures and equipment to be used for purging and sampling all groundwater monitoring wells at the Topock site with casing diameters in excess of 1-inch. This SOP will be used for sampling groundwater monitoring wells using a dedicated electric submersible pump with a single discharge rate, a dedicated electric pump with a controllable discharge rate, or a portable electric pump with a controllable discharge rate. A peristaltic pump or inertial pump (Waterra or similar) can be used if an electrical submersible pump is not appropriate. A well-volume based purging and sampling method will be used for these wells. This SOP does not apply to FLUTe wells, or Blatypus pump equipped wells (MW-58BR). Those wells will be sampled according to the relevant Field Activities Work Plan (available from on-site field coordinator).

REQUIRED DOCUMENTS:

- Event-specific planned sample table (PST).
- Applicable project work plan or monitoring plan. Refer to the Topock Program Sampling, Analysis, and Field Procedures Manual (Procedures Manual).
- Construction/Remedial Action Work Plan (C/RAWP) during the construction phase.
- Operation and Maintenance Manual (O&M Manual) and Quality Assurance Project Plan (QAPP) (Appendix B of the O&M Manual Volume 2, Sampling and Monitoring Plan) as required during the O&M phase.
- Topock Program Health and Safety Plan (HSP)
- Well construction logs/specifications
- Mobile Integrated Sample Tracking (MIST) handheld database
- Previous sampling logs or tabular historic field data tables
- Current site access map
- Blank sampling logs, maps, sample labels, chains of custody (COCs), and the designated groundwater sampling field notebook
- Applicable SOPs may include:
  - SOP-A2, *Purging and Sampling of 1-inch Diameter Groundwater Monitoring Wells, Modified Well-Volume Method*
  - SOP-A3, *Purging and Sampling of Active and Inactive Water Supply Wells*
  - SOP-A4, *Depth-Specific River Water Sampling*
  - SOP-A5, *Groundwater Sampling from Sonic Drilling Boreholes*

- SOP-A6, *Field Filtration*
- SOP-A7, *Water Level Measurements*
- SOP-A8, *Field Water Quality Measurements Using a Flow-through Cell*
- SOP-A9, *Calibration of Field Instruments*
- SOP-A10, *Decontamination of Water Sampling Equipment*
- SOP-A11, *Total Depth Measurements*
- SOP-A12, *Field Water Quality Measurements for Grab Samples*
- SOP-A13, *Spill Prevention, Containment, and Control Measures for Monitoring Well Sampling*
- SOP-A14, *Pore Water Sampling*
- SOP-A16, *Access Routes*
- SOP-A18, *Purging and Sampling of Groundwater Monitoring Wells, Minimal Drawdown Method*
- SOP-A19, *Sampling of Groundwater Monitoring Wells, Hydrasleeve No Purge Method*
- SOP-A23, *Sample Handling and Custody*
- SOP-C1, *Solinst Pressure Transducers*

REQUIRED EQUIPMENT:

- 2 or more (i.e. one is backup) YSI-556 WQ instruments with flow through cells, or equivalent.
- Hach 2100P turbidimeter or equivalent.
- 200 foot (or longer as needed) water level indicator (WLI).
- Trimble Rugged Reader hand held instrument for MIST data collection.
- Two, 200 gallon capacity purge tanks.
- Utility vehicles (UTV's) as necessary.
- Back-up 2-inch pump and controller.
- Honda 2000 watt generator or alternate power source.

PREPARATION & SETUP:

- Review event-specific PST or event-specific field instructions, previous sampling logs, Procedures Manual, HSP, and groundwater sampling supplies and equipment check list. (NOTE: the PST should also be reviewed for required "non-analytical event activities" such as water level measurements or other data collection that is planned in association with the groundwater sampling event).
- Acquire the existing field logbook for groundwater sampling and initiate entries.

- Inspect all equipment and verify that the field water quality (WQ) meters have been calibrated prior to use according to the manufacturer's instructions and SOP-A9, *Calibration of Field Instruments*.
- Inventory sample bottles, build sample sets for the required analytes at each sample location, ensure a sufficient supply of lab de-ionized water for equipment blanks, and confirm the lab courier schedule.
- Field-check sampling equipment and supplies: water level indicator (WLI), WQ meters, flow-through cell, pump controller, power supply, pump discharge/sampling tubing, N-dex gloves, D.I water sprayers, 5 gallon buckets, paper towels, 0.45 micron in-line filters, etc.

FIELD PROCEDURES:

- **Prior to opening any monitor well, remove all pens, lighters, calculators, or any other loose items from vest pockets, or from any other location where they could fall into the well.**
- Upon arrival at the monitoring well, at least 2 members of the sampling team must confirm the well ID. Wells should be clearly marked on the well monument. If the well cannot be positively identified by the marking, measure total depth of the well and compare to the well installation details to confirm the correct location. Report worn or unclear well markings to the on-site field coordinator.
- Place spill containment according to SOP-A13, *Spill Prevention, Containment, and Control Measures for Monitoring Well Sampling.*
- Collect an "EB", equipment blank, ***prior to pump installation*** if necessary according to the PST.
- Open the protective casing lid and, ***prior to moving it***, note the exact configuration of the transducer installation if present. Measure static WL according to SOP-A7, *Water level Measurements,* moving the transducer if necessary, and record WL value in MIST and on the sampling log.
- If the well is equipped with a transducer and does not have a dedicated pump installed, remove the transducer from the well according to SOP-C1, *Solinst Pressure Transducers*.
- If the well does not have a dedicated pump installed, but does have dedicated sample tubing, attach the dedicated tubing to the appropriate pump and install decontaminated pump at the same intake/sampling depth as used in prior events. There is a marking on the purge tubing which corresponds with the monitor well top of casing (TOC) to facilitate this requirement. Purge and sample the well as described below.
- If the well does not have a dedicated pump ***or*** tubing, or has not been previously sampled, use new low-density polyethylene tubing and install the pump with the intake 15 feet below the surface of the static water column, or at the depth prescribed by the Project Manager (PM) or Field Team Manager (FTM), and record the intake depth in MIST and on the field data sheet. Purge and sample the well as described below.

- If the well ***does*** have a dedicated pumping system, connect the discharge tubing and purge and sample the well as described below.
- Collect daily equipment blanks and duplicate samples as required by the PST and instructed by the field team leader.

PURGING AND SAMPLING PROCEDURES:

- Prepare the groundwater sampling log. Use the static water level and the total depth provided on the field data sheet and in the PST to calculate the volume of one casing of standing water in the well.
- Calculate 3 casing volumes for the minimum required purge amount and record on sampling log.
- Evaluate previous purge rates, amount of drawdown, stability of field parameters, and total purge volume prior to sample collection from previous sampling records and historical data tables (Appendix B of *Monitoring Plan for Groundwater and Surface Water Monitoring Program*). If the well has not been previously sampled, estimate the expected purge rate using previous sampling information from nearby wells.
- If the pumping rate is in excess of one gpm, install the provided flow splitter so that the pumping rate does not need to be decreased to collect the sample. If the flow rate is at two gpm or above, install a second flow splitter to control the flow through the flow through cell.
- Install the pump as previously described. Immediately after installation, stuff a large trash bag, or place another barrier into the well bore around the pump discharge tubing. This will help to prevent foreign objects from falling into the well.
- Ensure that all tubing connections are properly tightened and then start the pump. Check for any leaks, monitor drawdown, and calculate/set the purge rate. The purge rate can be determined using the fill-time of a graduated container, or using a flow meter if available. The well specific purge rate and pump setting should be available on the previous purge form. Record pump setting (i.e. hertz) on sampling log if available.
- Purge water should be contained in a portable purge water storage tank. If approved by well owner and the governing regulatory agencies, water may be discharged directly to the ground (this presently applies to PM-03 and PM-04 water supply wells), as directed by the FTM.
- Continue purging, measuring WL and field indicator parameters periodically (time, pH, conductivity, turbidity, dissolved oxygen, temperature, salinity, TDS, ORP, appearance, and any odors present). Time the readings such that there are a minimum of 4 sets of data collected over the course of the full purge.
- If significant drawdown is observed or turbidity increases dramatically, decrease the purge rate and measure/record new purge rate. Significant drawdown is considered to be 5 percent of the total height of the water column or to the top of screen. Record time for all measurements collected. Note and provide qualifying remarks if parameter readings are anomalous or unstable due to instrument problems and change out the instrument.

- During the purge, compare the field parameters to historical purge data. If the parameters are significantly different (greater than 50% difference for SC, pH, and/or ORP) re-confirm the ID of the well. If the well ID is re-confirmed by 2 crew members, and the readings continue to be significantly different than prior readings, set up a second WQ instrument in series to confirm readings. If the anomalous readings are confirmed by the second instrument, contact the field coordinator to resolve the issue. If the second WQ instrument produces readings that are comparable to historic values, note an instrument change and use the second instrument's readings.
- Continue purging until ***3-casing volumes*** have been removed ***and*** field parameters stabilize. Indicator parameters are considered stabilized when 3 consecutive readings made several minutes apart fall within the following EPA stabilization criteria:
  - pH +/- 0.1 pH units
  - Specific conductance +/- 3%
  - ORP +/- 10 millivolts
  - Turbidity 10 NTU units or less unless other parameters have stabilized during an extended purge and turbidity is trending flat if still over 10 NTU units. The target turbidity goal (but not a hard criterion) is 5 to 10 NTUs.
  - Dissolved oxygen +/- 0.3 mg/L
  - Temperature +/- 2° Celsius
- When the requirements above have been satisfied and the purge cycle is complete, disconnect the flow through cell and prepare to collect samples directly from the pump discharge tubing for analyses according to event-specific PST.
- If flow splitters have been used, do not change the flow rate, and collect the sample from the dedicated sampling port of the first splitter in line.
- Prepare sample containers and collect gas-sensitive analytes first. The preferred collection order will be volatile organic compounds (VOCs), semi-volatile organic compound (SVOCs), metals (including hexavalent chromium [Cr(VI)] and total chromium [Cr(T)]; see SOP-A6), then general chemistry (cations, anions, stable isotopes).
- For filtered samples, attach a 0.45 micron in-line filter to the pump discharge and allow approximately 500 mL of sample to pass through the filter before beginning sample collection in accordance with SOP-A6, *Field filtration* and the QAPP.
- When sample collection is complete, record sample information, final WL, and purge volume data in MIST and on the field sampling log.
- If transient pump previously installed, remove the pump from the well, detach the dedicated tubing and carefully drain any residual water to the purge water tank. Install appropriate tubing cap to prevent any residual water from leaking from the sample tubing. Store the dedicated tubing in a sealed, labeled trash bag. Decontaminate the pump according to SOP-A10, *Decontamination of Water Sampling Equipment.*

- If well was equipped with a transducer, replace the transducer in exactly the same configuration in which it was found and in accordance with SOP-C1, *Solinst Pressure Transducers*.
- Close and secure well protection lid.
- Follow the applicable SOPs, O&M Manual and the Procedures Manual for sample handing and management, equipment decontamination, and investigation-derived waste (IDW) management (O&M Manual Volume 1, Section 6 during O&M or Appendix R of the C/RAWP during construction).

LOW VOLUME AND POOR RECOVERY WELLS:

Some groundwater monitoring wells under the GMP may exhibit slow or poor recovery upon purging. These monitoring wells may not recharge sufficiently during purging, and may run completely dry without an opportunity to collect the required series of groundwater stabilization parameters, or requisite samples. The following procedures will be followed for collecting representative groundwater samples from wells that go dry during purging.

PREPARATION & SETUP:

Follow the steps above.

PURGING AND SAMPLING PROCEDURES FOR LOW RECOVERY WELLS:

- Prepare the groundwater sampling log. Use the static water level and the total depth provided on the field data sheet (comparing to the previous values used on the PST) to calculate the volume of one casing of standing water in the well.
- Calculate 3 casing volumes for the minimum required purge amount, and record on purge log.
- Evaluate previous purge rates, amount of drawdown, stability of field parameters, and total purge volume prior to sample collection from previous sampling records and historical data tables (Appendix B of *Monitoring Plan for Groundwater and Surface Water Monitoring Program*). If the well has not been previously sampled, estimate the expected purge rate using previous sampling information from nearby wells.
- Connect the dedicated purge tubing if available or use new tubing if necessary. Install the pump within the well screen or to the previously determined depth and start the purge. Monitor drawdown, and calculate/set the purge rate. Record the pump setting (i.e. hertz) on the sampling log if available.
- Continue purging, measuring WL and field indicator parameters periodically (time, pH, conductivity, turbidity, dissolved oxygen, temperature, salinity, TDS, ORP, and any odors present). Space the readings such that there are a minimum of 4 sets of data collected over the course of the available purge volume.
- During the purge, compare the field parameters to previous purge data. If the parameters are significantly different (greater than 50% difference for SC, pH, and/or ORP) confirm the ID of the well. If the well ID is confirmed by 2 crew members, and the

readings continue to be significantly different than prior readings, set up a second WQ instrument in series to confirm readings. If the anomalous readings are confirmed by the second instrument, contact the field coordinator to resolve the issue. If the second WQ instrument produces readings that are comparable to historic values, note an instrument change and use the second instrument's readings.

- Continue purging until ***3-casing volumes*** have been removed ***and*** field parameters stabilize, or until the well purges dry. If 3 casing volumes are removed, sample as described above. If the well runs dry, continue as instructed below.
- If previously installed, remove the pump from the well and decontaminate according to SOP A-10, *Decontamination of Water Sampling Equipment*. The pump may also be left in place to facilitate subsequent purging and sampling.
- Record the final water level, time, the volume of water discharged and the elapsed time for the dewatering of the well.
- Allow the well to recharge to 80 percent of the original height of the water column. Ideally, this should be within 24 hours of the monitoring well being purged dry. The recovery period to achieve 80 percent of the height of the water column could take longer than 24 hours in some instances (MW-48).
- ***At MW-24BR only,*** return to the well the following day and continue purging until a total of 190 gallons have been removed, then sample normally.
- Once recovery has reached 80%, or 48 hours have elapsed (whichever comes first), a bailer can be used for sample collection. Collect samples for analyses according to PST. Prepare sample containers and collect gas-sensitive analytes first. The preferred collection order will be volatile organic compounds (VOCs), semi-volatile organic compound (SVOCs), metals (including hexavalent chromium [Cr(VI)] and total chromium [Cr(T)]), then general chemistry (cations, anions, stable isotopes).
- If an insufficient volume of water is available to fill all of the sample containers, first contact laboratory personnel to determine the minimum allowable volumes needed for the required analyses. *(Talk to FTM as the FTM may have already contact lab personnel and may have the instructions for you.)* Then verify the critical analyte list with the PM or the FTM and prioritize the sample collection to obtain the critical analytes for the main contaminants of concern first. Continue collecting samples until all samples have been collected, or the groundwater supply is exhausted. Unfiltered samples are to be filled by transferring water directly from the bailer to the sample container.
- For filtered samples, attach a 0.45 micron in-line filter to the bailer and allow approximately 200 mls of sample to pass through the filter before beginning sample collection in accordance with SOP-A6 *Field filtration*. If gravity flow is insufficient to filter the sample, use a pressurized bailer and filter for sample filtration.
- When sample collection is complete, record sample information, final WL, and purge volume data in MIST and on the field sampling log.
- If well was equipped with a transducer, replace the transducer in exactly the same configuration in which it was found and according to SOP-C1, *Solinst Pressure Transducers*.

- Close and secure well protection lid.
- Follow applicable SOPs, the O&M Manual and Procedures Manual for sample handing and management, equipment decontamination, and IDW management (O&M Manual Volume 1, Section 6 during O&M or Appendix R of the C/RAWP during construction).

SOP-A2

Purging and Sampling of 1-inch-diameter Groundwater Monitoring Wells Modified Well-Volume Method Standard Operating Procedures for PG&E Topock Program

---

This standard operating procedure (SOP) addresses the procedures and equipment to be used for purging and sampling all groundwater monitoring wells at the Topock site with 1-inch casing diameters. This SOP will be used for sampling groundwater monitoring wells using dedicated tubing and a peristaltic pump or a mini-bladder pump. A well-volume based purging and sampling method will be used for such wells.

REQUIRED DOCUMENTS:

- Event-specific planned sample table (PST).
- Applicable project work plan or monitoring plan. Refer to the Topock Program Sampling, Analysis, and Field Procedures Manual (Procedures Manual).
- Construction/Remedial Action Work Plan (C/RAWP) during the construction phase.
- Operation and Maintenance Manual (O&M Manual), and Quality Assurance Project Plan (QAPP) (Appendix B of the O&M Manual Volume 2, Sampling and Monitoring Plan), as required during the O&M phase.
- Topock Program Health and Safety Plan (HSP)
- Applicable SOPs may include:
  - SOP-A1, *Purging and Sampling of Groundwater Monitoring Wells, Well-Volume Method*
  - SOP-A3, *Purging and Sampling of Active and Inactive Water Supply Wells*
  - SOP-A4, *Depth-Specific River Water Sampling*
  - SOP-A5, *Groundwater Sampling from Sonic Drilling Boreholes*
  - SOP-A6, *Field Filtration*
  - SOP-A7, *Water Level Measurements*
  - SOP-A8, *Field Water Quality Measurements Using a Flow-through Cell*
  - SOP-A9, *Calibration of Field Instruments*
  - SOP-A10, *Decontamination of Water Sampling Equipment*
  - SOP-A11, *Total Depth Measurements*
  - SOP-A12, *Field Water Quality Measurements for Grab Samples*
  - SOP-A13, *Spill Prevention, Containment, and Control Measures for Monitoring Well Sampling*
  - SOP-A14, *Pore Water Sampling*
  - SOP-A16, *Access Routes*

  - SOP-A18, *Purging and Sampling of Groundwater Monitoring Wells, Minimal Drawdown Method*
  - SOP-A19, *Sampling of Groundwater Monitoring Wells, Hydrasleeve No Purge Method*
  - SOP-A23, *Sample Handling and Custody*
  - SOP-C1, *Solinst Pressure Transducers*
- Well construction logs/specifications
- Mobile Integrated Sample Tracking (MIST) handheld database
- Previous sampling logs or tabular historic field data
- Current site access map
- Blank sampling logs, maps, sample labels, chains of custody (COC's), and the designated groundwater sampling field notebook

REQUIRED EQUIPMENT:

- 2 or more YSI-556 water quality (WQ) instruments with flow through cells, or equivalent.
- Hach 2100P turbidimeter or equivalent.
- 200 foot Water level indicator (WLI).
- Trimble Rugged Reader hand held instrument for MIST data collection.
- 30 gallon purge water tank.
- Decontamination spray bottles
- Utility vehicles (UTVs) as necessary.
- 12 volt peristaltic pump or mini-bladder pump.
- 12 volt power source.

PREPARATION & SETUP:

- Review event-specific PST or event-specific field instructions, previous sampling logs, Procedures Manual, O&M Manual, HSP, and groundwater sampling supplies and equipment check list. (NOTE: the PST should also be reviewed for required "non-analytical event activities" such as water level measurements or other data collection to be performed in association with the groundwater sampling event).
- Acquire the existing field logbook for groundwater sampling and initiate entries.
- Inspect all equipment and verify that the field WQ meters have been calibrated prior to use according to the manufacturer's instructions and SOP-A9, *Calibration of Field Instruments*.

- Inventory sample bottles, build sample sets for the required analytes at each sample location, ensure a sufficient supply of lab de-ionized water for equipment blanks, and confirm the lab courier schedule.
- Field-check sampling equipment and supplies: WLI, WQ meters, flow-through cell, peristaltic pump or mini-bladder pump, power supply, pump discharge/sampling tubing, N-dex gloves, de-ionized water sprayers, 5 gallon buckets, paper towels, 0.45 micron in-line filters, etc.
- Field-check and setup sampling equipment: WLI, WQ meters, flow-through cell, pump and power supply, pump discharge/sampling tubing, etc. Install dedicated tubing and connect to peristaltic pump. Connect peristaltic pump or mini-bladder pump to 12 volt power supply.

FIELD PROCEDURES:

- **Prior to opening any monitor well, remove all pens, lighters, calculators, or any other loose items from vest pockets, or from any other location where they could fall into the well.**
- Upon arrival at the monitoring well, at least 2 members of the sampling team must confirm the well ID. Wells should be clearly marked on the well monument. If the well cannot be positively identified by the marking, measure total depth of the well and compare to the well installation details to confirm the correct location.
- Place spill containment according to SOP-A13, *Spill Prevention, Containment, and Control Measures for Monitoring Well Sampling.*
- Open the protective casing lid and, ***prior to moving it***, note the exact configuration of the transducer installation if present. Measure static water level (WL) according to SOP-A7, *Water Level Measurements,* moving the transducer if necessary, and record WL value in MIST on the sampling log.
- If the well is equipped with a transducer, remove the transducer from the well according to SOP-C1, *Solinst Pressure Transducers*.
- Collect daily equipment blanks and duplicate samples as required by the PST and instructed by the field team leader.

PURGING AND SAMPLING PROCEDURES:

- Prepare the groundwater sampling log. Use the static water level determined above and the total depth provided on the field data sheet and in the PST to calculate the volume of one casing of standing water in the well. Calculate 3 casing volumes for the minimum required purge amount, and record on purge log.
- Prior to purging, evaluate previous purge rates, amount of drawdown, and purge volume from previous sampling records and historical data tables (Appendix B of *Monitoring Plan for Groundwater and Surface Water Monitoring Program*). If the well has not been previously sampled, estimate the expected purge parameters using previous sampling information from nearby wells.

- Install the dedicated tubing if available, or use new tubing as necessary. Connect the tubing to the peristaltic pump or mini-bladder pump, check that all fittings are tight, and start purging the well. Check for leaks. Measure WL and calculate the purge rate immediately and adjust if necessary. Purge rate will be measured by using the fill-time of a graduated container. The well specific purge rate and pump setting should be available on the previous purge form.
- Allow the flow through cell to fill and field parameters to stabilize, then start recording field indicator parameters on the sampling sheet and in MIST.
- Continue purging, measuring WL and field indicator parameters periodically (time, pH, conductivity, turbidity, dissolved oxygen, temperature, salinity, TDS, ORP, appearance, and any odors present). Time the readings such that there are a minimum of 5 sets of data collected over the course of the full purge.
- If significant drawdown is observed, or turbidity increases dramatically, decrease the purge rate and measure/record new purge rate. Significant drawdown is considered to be 5 percent of the total height of the water column or to the top of screen. Record time for all measurements collected. Note and provide qualifying remarks if parameter readings are anomalous or unstable due to instrument problems.
- During the purge, compare the field parameters to historical purge data. If the parameters are significantly different (greater than 50% difference for SC, pH, and/or ORP) confirm the ID of the well. If the well ID is confirmed by 2 crew members, and the readings continue to be significantly different than prior readings, set up a second WQ instrument in series to confirm readings. If the anomalous readings are confirmed by the second instrument, contact the field coordinator to resolve the issue. If the second WQ instrument produces readings that are comparable to historic values, note an instrument change and use the second instrument's readings.
- Continue purging until ***3-casing volumes*** have been removed ***and*** field parameters stabilize. Indicator parameters are considered stabilized when 3 consecutive readings made several minutes apart fall within the following EPA stabilization criteria:

-	pH	+/- 0.1 pH units
-	Specific conductance	+/- 3%
-	ORP	+/- 10 millivolts
-	Turbidity	10 NTU units or less unless other parameters have stabilized during an extended purge and turbidity is trending flat if still over 10 NTU units. The target turbidity goal (but not a hard criterion) is 5 to 10 NTUs.
-	Dissolved oxygen	+/- 0.3 mg/L
-	Temperature	+/- 2° Celsius

- When the requirements above have been satisfied and the purge cycle is complete, disconnect the flow through cell and prepare to collect samples directly from the pump discharge tubing for analyses according to event-specific PST. For all samples, decrease the discharge rate as necessary to reduce water turbulence at the pump discharge point.

Prepare sample containers and collect gas-sensitive analytes first. The preferred collection order will be volatile organic compounds (VOCs), semi-volatile organic compound (SVOCs), metals (including hexavalent chromium [Cr(VI)] and total chromium [Cr(T)]; see SOP-A6), then general chemistry (cations, anions, stable isotopes).

- For filtered samples, attach a 0.45 micron in-line filter to the pump discharge and allow approx. 500 mls of sample to pass through the filter before beginning sample collection in accordance with SOP A6, *Field filtration*.
- When sample collection is complete, record sample information, final WL, and purge volume data in MIST and on the field sampling log.
- If previously installed, remove the pump from the well, detach the dedicated tubing and carefully drain any residual water to the purge water tank. Fold both ends of the purge tubing and secure with wire ties as a further deterrent to leakage. Store the dedicated tubing in a sealed, labeled trash bag. Decontaminate the pump according to SOP-A10, *Decontamination of Water Sampling Equipment.*
- If well was equipped with a transducer, replace the transducer in exactly the same configuration in which it was found and according to SOP-C1, *Solinst Pressure Transducers*.
- Close and secure well protection lid.
- Follow applicable SOPs in the Procedures Manual and O&M Manual for sample handling and management, equipment decontamination, and investigation-derived waste (IDW) management (O&M Manual, Volume 1, Section 6 during O&M or Appendix R of the C/RAWP during construction).

LOW VOLUME AND POOR RECOVERY WELLS:

Some groundwater monitoring wells under the GMP may exhibit slow or poor recovery upon purging. These groundwater monitoring wells may not recover sufficiently during purging and run completely dry without an opportunity to collect the required series of groundwater stabilization parameters, or run dry prior to sampling. The following procedures should be followed for collection representative groundwater samples from wells that go dry during purging activities in preparation for groundwater sampling.

PREPARATION & SETUP:

Follow steps above.

PURGING AND SAMPLING PROCEDURES FOR LOW RECOVERY WELLS:

- Prepare the groundwater sampling log. Use the static water level determined above and the total depth provided on the field data sheet and in the PST to calculate the volume of one casing of standing water in the well.
- Calculate 3 casing volumes for the minimum required purge amount, and record on purge log.

- Evaluate previous purge rates, amount of drawdown, stability of field parameters, and total purge volume prior to sample collection from previous sampling records and historical data tables (Appendix B of *Monitoring Plan for Groundwater and Surface Water Monitoring Program*). If the well has not been previously sampled, estimate the expected purge rate using previous sampling information from nearby wells.
- Connect the dedicated purge tubing if available, or use new tubing if necessary. Install the pump within the well screen or to the previously determined depth and start the purge. Monitor drawdown, and calculate/set the purge rate.
- Continue purging, measuring WL and field indicator parameters periodically (time, pH, conductivity, turbidity, dissolved oxygen, temperature, salinity, TDS, ORP, and any odors present). Space the readings such that there are a minimum of 5 sets of data collected over the course of the available purge volume.
- During the purge, compare the field parameters to previous purge data. If the parameters are significantly different (greater than 50% difference for SC, pH, and/or ORP) confirm the ID of the well. If the well ID is confirmed by 2 crew members, and the readings continue to be significantly different than prior readings, set up a second WQ instrument in series to confirm readings. If the anomalous readings are confirmed by the second instrument, contact the field coordinator to resolve the issue. If the second WQ instrument produces readings that are comparable to historic values, note an instrument change and use the second instrument's readings.
- Continue purging until ***3-casing volumes*** have been removed ***and*** field parameters stabilize, or until the well purges dry. If 3 casing volumes are removed, sample as described above. If the well runs dry, continue as instructed below.
- If previously installed, remove the pump from the well and decontaminate according to SOP-A10, *Decontamination of Water Sampling Equipment.* The pump may also be left in place to facilitate subsequent purging and sampling.
- Record the final water level, time, the volume of water discharged and the elapsed time for the dewatering of the well.
- Allow the well to recharge to 80 percent of the original height of the water column. Ideally, this should be within 24 hours of the monitoring well being purged dry. The recovery period to achieve 80 percent of the height of the water column could take longer than 24 hours in some instances (MW-48).
- Once recovery has reached 80%, or 48 hours have elapsed (whichever comes first), a bailer can be used for sample collection. Collect samples for analyses according to PST. Prepare sample containers and collect gas-sensitive analytes first. The preferred collection order will be volatile organic compounds (VOCs), semi-volatile organic compound (SVOCs), metals (including hexavalent chromium [Cr(VI)] and total chromium [Cr(T)]), then general chemistry (cations, anions, stable isotopes).
- If an insufficient volume of water is available to fill all of the sample containers, first contact laboratory personnel to determine the minimum allowable volumes needed for the required analyses, then verify the critical analyte list with the PM or the FTM and prioritize the sample collection to obtain the critical analytes for the main contaminants

of concern first. Continue collecting samples until all samples have been collected, or the groundwater supply is exhausted. Unfiltered samples are to be filled by transferring water directly from the bailer to the sample container.

- For filtered samples, attach a 0.45 micron in-line filter to the bailer and allow approx. 200 mls of sample to pass through the filter before beginning sample collection in accordance with SOP-A6, *Field filtration*. If gravity flow is insufficient to filter the sample, use a pressurized bailer and filter for sample filtration.
- When sample collection is complete, record sample information, final WL, and purge volume data in MIST and on the field sampling log.
- If well was equipped with a transducer, replace the transducer in exactly the same configuration in which it was found and according to SOP-C1, *Solinst Pressure Transducers*.
- Close and secure well protection lid.
- Follow applicable SOPs, the Procedures Manual, and the O&M Manual for sample handing and management, equipment decontamination, and IDW management (O&M Manual, Volume 1, Section 6 during O&M or Appendix R of the C/RAWP during construction).

SOP-A3

Purging and Sampling of Active and Inactive Water Supply Wells Standard Operating Procedures for PG&E Topock Program

This standard operating procedure (SOP) addresses the procedures and equipment to be used for purging and sampling active and inactive water supply wells in the vicinity of the Topock site. This procedure also applies to the collection of water quality samples from long-screen extraction, injection, and test wells. Active and inactive water supply wells with functional dedicated pumps and a sampling port will be sampled directly from the sampling port. Inactive supply wells without functional pumps will be sampled using a temporary submersible pump following the well-volume sampling procedure.

REQUIRED DOCUMENTS:

- Event-specific planned sample table (PST).
- Applicable project work plan or monitoring plan. Refer to the Topock Program Sampling, Analysis, and Field Procedures Manual (Procedures Manual).
- Construction/Remedial Action Work Plan (C/RAWP) during the construction phase.
- Operation and Maintenance Manual (O&M Manual), and Quality Assurance Project Plan (QAPP) and Addendum to the QAPP (Appendix B of the O&M Manual Volume 2, Sampling and Monitoring Plan), as required during the O&M phase.
- Topock Program Health and Safety Plan (HSP)
- Applicable SOPs may include:
  - SOP-A1, *Purging and Sampling of Groundwater Monitoring Wells, Well-Volume Method*
  - SOP-A3, *Purging and Sampling of Active and Inactive Water Supply Wells*
  - SOP-A4, *Depth-Specific River Water Sampling*
  - SOP-A5, *Groundwater Sampling from Sonic Drilling Boreholes*
  - SOP-A6, *Field Filtration*
  - SOP-A7, *Water Level Measurements*
  - SOP-A8, *Field Water Quality Measurements Using a Flow-through Cell*
  - SOP-A9, *Calibration of Field Instruments*
  - SOP-A10, *Decontamination of Water Sampling Equipment*
  - SOP-A11, *Total Depth Measurements*
  - SOP-A12, *Field Water Quality Measurements for Grab Samples*
  - SOP-A13, *Spill Prevention, Containment, and Control Measures for Monitoring Well Sampling*
  - SOP-A14, *Pore Water Sampling*
  - SOP-A16, *Access Routes*

  - SOP-A18, *Purging and Sampling of Groundwater Monitoring Wells, Minimal Drawdown Method*
  - SOP-A19, *Sampling of Groundwater Monitoring Wells, Hydrasleeve No Purge Method*
  - SOP-A23, *Sample Handling and Custody*
  - SOP-C1, *Solinst Pressure Transducers*
- Well construction logs/specifications
- Mobile Integrated Sample Tracking (MIST) handheld database
- Previous sampling logs or tabular historic field data
- Current site access map
- Blank sampling logs, maps, sample labels, chains of custody (COCs), and the designated groundwater sampling field notebook

REQUIRED EQUIPMENT:

- 2 or more YSI-556 water quality (WQ) instruments with flow through cells, or equivalent.
- Hach 2100P turbidimeter or equivalent.
- 200 foot Water level indicator (WLI).
- Trimble Rugged Reader hand held instrument for MIST data collection.
- 200 gallon capacity purge tanks (2).
- Utility vehicles (UTV's) as necessary.
- Back-up 2 inch pump and controller.
- Honda 2000 watt generator or alternate power source.

PREPARATION AND SETUP:

- Review event-specific PST or event-specific field instructions, previous sampling logs, Procedures Manual, O&M Manual, QAPP and the Addendum to the QAPP, HSP, and groundwater sampling supplies and equipment check list.
- Acquire the existing field logbook for surface water sampling and initiate entries.
- Inspect all equipment and verify that the field WQ meters have been calibrated prior to use according to the manufacturer's instructions and SOP-A9, *Calibration of Field Instruments*.
- Inventory sample bottles, build sample sets for the required analytes at each sample location, ensure a sufficient supply of lab de-ionized water for equipment blanks, and confirm the lab courier schedule.
- Field-check sampling equipment and supplies: WLI, WQ meters, flow-through cell, pump controller, power supply, pump discharge/sampling tubing, N-dex gloves, D.I water sprayers, paper towels, etc.

PURGING AND SAMPLING PROCEDURES FOR *ACTIVE* WATER SUPPLY WELLS:

- **Prior to opening any well, remove all pens, lighters, calculators, or any other loose items from vest pockets, or from any other location where they could fall into the well.**
- Upon arrival at the well, at least 2 members of the sampling team must confirm the well ID. If the well cannot be clearly identified by the marking, measure total depth of the well and compare to the well installation details to confirm the correct location.
- Access the well and, ***prior to moving it***, note the exact configuration of the transducer installation if present. If the well has been inactive for more than 24 hours, a water level measurement can be taken. Measure static water level (WL) according to SOP-A7, *Water Level Measurements,* moving the transducer if necessary, and record WL value in MIST on the sampling log.
- If the well is equipped with a transducer and transducer removal is required for sampling, follow SOP-C1, *Solinst Pressure Transducers*.
- If it is known that 3-casing volumes have been purged from the well in the last 24-hour period, purging will not be necessary prior to sampling. Connect one end of a new or dedicated piece of LDPE tubing to the pump discharge port and connect the other to the inlet of the flow through cell. If it is not possible to connect the flow-through cell, a clean 5-gallon bucket may be used by filling the bucket with purge water and inserting the instrument probes directly into the bucket. If a bucket is used, turbulence in the bucket should be minimized to the extent possible.
- Carefully open the valve at the sampling port until the desired flow rate is achieved, then allow the flow through cell to fill and the parameters to stabilize before collecting a single set of water quality parameters. Record in MIST and on the field data sheet. Note and provide qualifying remarks if parameter readings are anomalous or unstable due to instrument problems. Purge water should be contained in a portable purge water storage tank. If approved by well owner and the governing regulatory agencies, water may be discharged directly to the ground, as directed by the Field Team Manager (FTM).
- Observations on sample appearance and clarity during purging and at sampling are required! For standardization, use a clear glass jar to collect and record observations of discharge water appearance during purging. Also note characteristics such as any odors associated with the discharge water.
- Compare the field parameters to historical purge data. If the parameters are significantly different (greater than 50% difference for SC, pH, and/or ORP) confirm the ID of the well. If the well ID is confirmed by 2 crew members, and the readings continue to be significantly different than prior readings, set up a second WQ instrument in series to confirm readings. If the anomalous readings are confirmed by the second instrument, contact the field coordinator to resolve the issue. If the second WQ instrument produces readings that are comparable to historic values, note an instrument change and use the second instrument's readings.
- Disconnect the flow through cell and collect samples for analyses according to the PST. Sample containers are to be filled by transferring water directly from the pump discharge or sampling spigot to the appropriate sample container.

- For filtered samples, attach a 0.45 micron in-line filter to the pump discharge and allow approx. 500 mls of sample to pass through the filter before beginning sample collection in accordance with SOP-A6, *Field filtration*.
- When sample collection is complete, record sample information, final WL, and purge volume data on field log. If the pump is equipped with a flow meter, record the flow rate as well.
- If well was equipped with a transducer, replace transducer according to SOP-C1, *Solinst Pressure Transducers*.
- Close and secure well including access gates or fences.
- Follow applicable SOPs, the Procedures Manual, and the O&M Manual for sample handing and management, equipment decontamination, and investigation-derived waste (IDW) management (O&M Manual Volume 1, Section 6 during O&M or Appendix R of the C/RAWP during construction).

PURGING AND SAMPLING PROCEDURES FOR *INACTIVE* WATER SUPPLY WELLS:

Inactive water wells may include: (1) wells with functioning dedicated pumps, (2) wells without dedicated pumps, and (3) wells with non-functioning dedicated pumps. A well-pump subcontractor may be required to install temporary pumps for purging wells without pumps and non-functioning dedicated pumps.

- **Prior to opening any monitor well, remove all pens, lighters, calculators, or any other loose items from vest pockets, or from any other location where they could fall into the well.**
- Upon arrival at the well, at least 2 members of the sampling team must confirm the well ID. Wells will be clearly marked on the well monument. If the well cannot be clearly identified by the marking, measure total depth of the well and compare to the well installation details to confirm the correct location.
- Access the well and, ***prior to moving it***, note the exact configuration of the transducer installation if present. If the well has been inactive for more than 24 hours, a water level measurement can be taken. Measure static WL according to SOP-A7, *Water Level Measurements,* moving the transducer if necessary, and record WL value in MIST on the sampling log.
- If the well is equipped with a transducer and transducer removal is required for sampling, follow SOP-C1, *Solinst Pressure Transducers*.
- If the well has had well volumes purged in the last 24 hours, then it is an active well and purging before *sampling may be limited to volume sufficient f*or field parameter measurement.
- If it is determined that 3-casing volumes ***have not*** been purged in the last 24-hours, calculate 3-casing volumes using measured WL depth, casing diameter, and total well depth information. If it is not possible to measure the depth to water or total depth of the well, use well records or prior knowledge to calculate 3-casing volumes.
- Start purging using the functional dedicated equipment, if available. Check for any leaks, monitor drawdown, and calculate/set the purge rate.

- If dedicated equipment is not present or nonfunctional, a portable pump installed by subcontractor may be used for purging and sampling. Install a decontaminated pump at the same intake/sampling depth used in prior events and record intake depth. If the well has not been previously sampled, install the pump with the intake in the middle of the screened interval ,or the midpoint of the saturated interval if the water level is lower than the top of the screen, or at the depth proscribed by the Project Manager or FTM.
- Purge water should be contained in a portable purge water storage tank. If approved by well owner and the governing regulatory agencies, water may be discharged directly to the ground, (at present this is only the case at PM-03 and PM-04 supply wells), as directed by the Field Team Manager.
- Continue purging, measuring WL and field indicator parameters periodically (time, pH, conductivity, turbidity, dissolved oxygen, temperature, salinity, TDS, ORP, and any odors present). Time the readings such that there are a minimum of 5 sets of data collected over the course of the full purge.
- Decrease the purge rate and measure/record new purge rate if significant drawdown is observed or turbidity increases dramatically. Significant drawdown is considered to be 5 percent of the total height of the water column or to the top of screen. Record time for all measurements collected. Note and provide qualifying remarks if parameter readings are anomalous or unstable due to instrument problems.
- During the purge, compare the field parameters to previous purge data. If the parameters are significantly different (greater than 50% difference for SC, pH, and/or ORP) confirm the ID of the well. If the well ID is confirmed by 2 crew members, and the readings continue to be significantly different than prior readings, set up a second WQ instrument in series to confirm readings. If the anomalous readings are confirmed by the second instrument, contact the field coordinator to resolve the issue. If the second WQ instrument produces readings that are comparable to historic values, note an instrument change and use the second instrument's readings.
- Continue purging until ***3-casing volumes*** have been removed ***and*** field parameters stabilize. Indicator parameters are considered stabilized when 3 consecutive readings made several minutes apart fall within the following EPA stabilization criteria:

- pH	+/- 0.1 pH units
- Specific conductance	+/- 3%
- ORP	+/- 10 millivolts
- Turbidity	10% NTU units or less unless other parameters have stabilized during an extended purge and turbidity is trending flat if still over 10 NTU units.
- Dissolved oxygen	+/- 0.3 mg/L
- Temperature	+/- 2° Celsius

- When the requirements above have been satisfied and the purge cycle is complete, disconnect the flow through cell and prepare to collect samples directly from the pump discharge tubing for analyses according to event-specific PST. For all samples, decrease the discharge rate as necessary to reduce water turbulence at the pump discharge point.

Prepare sample containers and collect gas-sensitive analytes first. The preferred collection order will be volatile organic compounds (VOCs), semi-volatile organic compound (SVOCs), metals (including hexavalent chromium [Cr(VI)] and total chromium [Cr(T)]; see SOP-A6), then general chemistry (cations, anions, stable isotopes).

- For filtered samples, attach a 0.45 micron in-line filter to the pump discharge and allow approx. 500 mls of sample to pass through the filter before beginning sample collection in accordance with SOP-A6, *Field filtration*.
- When sample collection is complete, record sample information, final WL, and purge volume data in MIST and on the field sampling log.
- If previously installed, remove the pump from the well and decontaminate according to SOP-A10, *Decontamination of Water Sampling Equipment.*
- If well was equipped with a transducer, replace the transducer in exactly the same configuration in which it was found and according to SOP-C1, *Solinst Pressure Transducers*.
- Close and secure well, including fences and gates.
- Follow applicable SOPs, the Procedures Manual, and O&M Manual for sample handing and management, equipment decontamination, and IDW management (O&M Manual Volume 1, Section 6 during O&M or Appendix R of the C/RAWP during construction).

SOP-A4

Depth-Specific River Water Sampling
Standard Operating Procedures for PG&E Topock Program

This standard operating procedure (SOP) addresses the procedures and equipment to be used for river channel and shoreline surface water sampling at the Topock site. This SOP should be used for depth-specific river channel surface water sampling and single depth shoreline sampling stations on the Colorado River.

REQUIRED DOCUMENTS

1) Event-specific planned sample table (PST) or Mobile Integrated Sample Tracking (MIST) handheld database, Plan Versus Actual Report, Delegation of Authority, and Contingency Plan.
2) Applicable project work plan or monitoring plan. Refer to the Topock Program Sampling, Analysis, and Field Procedures Manual (Procedures Manual).
3) Construction/Remedial Action Work Plan (C/RAWP) during the construction phase.
4) Operation and Maintenance Manual (O&M Manual), and Quality Assurance Project Plan (QAPP) (Appendix B of the O&M Manual Volume 2, Sampling and Monitoring Plan), as required during the O&M phase.
5) Topock Program Health and Safety Plan (HSP).
6) Blank sampling logs, MIST database and field notebook. Purge and sampling information will be recorded on hard copy purge form and MIST handheld database.
7) Applicable SOPs may include:
   - SOP-A1, *Purging and Sampling of Groundwater Monitoring Wells, Well-Volume Method*
   - SOP-A2, *Purging and Sampling of 1-inch Diameter Groundwater Monitoring Wells, Modified Well-Volume Method*
   - SOP-A3, *Purging and Sampling of Active and Inactive Water Supply Wells*
   - SOP-A5, *Groundwater Sampling from Sonic Drilling Boreholes*
   - SOP-A6, *Field Filtration*
   - SOP-A7, *Water Level Measurements*
   - SOP-A8, *Field Water Quality Measurements Using a Flow-through Cell*
   - SOP-A9, *Calibration of Field Instruments*
   - SOP-A10, *Decontamination of Water Sampling Equipment*
   - SOP-A11, *Total Depth Measurements*
   - SOP-A12, *Field Water Quality Measurements for Grab Samples*

- SOP-A13, *Spill Prevention, Containment, and Control Measures for Monitoring Well Sampling*
- SOP-A14, *Pore Water Sampling*
- SOP-A16, *Access Routes*
- SOP-A18, *Purging and Sampling of Groundwater Monitoring Wells, Minimal Drawdown Method*
- SOP-A19, *Sampling of Groundwater Monitoring Wells, Hydrasleeve No Purge Method*
- SOP-A23, *Sample Handling and Custody*

• SOP-C1, *Solinst Pressure Transducers*

PREPARATION & SETUP

1) Review event-specific Sampling and Analysis Plan or event-specific field instructions, previous sampling logs, Field Procedures Manual, previous lessons learned, and HSP. (NOTE: the PST should also be reviewed for required "non-analytical event activities" in association with the river sampling event).
2) Initiate field logbook for sampling activity.
3) Inspect all equipment and calibrate field water quality (WQ) meters according to SOP-A9, *Calibration of Field Instruments*.
4) Inventory sample bottles and labels, required analyses, and confirm the lab courier schedule.
5) Field-check and set up sampling equipment: WQ meters, health and safety apparatuses (life vest, rescue rope, life preserver), water depth meter or depth-finder, peristaltic pump, filters, sufficient tygon and silicone tubing, polypropylene rope, sampling equipment, etc.
6) Prepare an ambient blank sample at the beginning of each day. Fill a 250 mL sample container with deionized water. This bottle is to remain open near the sampler for the duration of the day's sampling activities. At the end of the day close the sample container. Send the blank samples to the analytical lab for Cr(VI) analysis (by method 218.6), be sure to write "**hold**" on the COC. The blanks will only to be analyzed if there are anomalous results from the river samples.

IN-CHANNEL SAMPLING PROCEDURES

1) Prepare river water sampling log (use attached form).
2) The sampling team will travel to each river sampling station in a motorized boat. A safety inspection of the boat will be performed by the field crew prior to boarding (check for fire extinguisher, etc.). Samples will be collected from selected stations on the river approximately one-third the river width from the California shoreline.
3) Collect an equipment blank sample prior to sampling by running deionized water through a new/dedicated segment of tubing.

4) An industry standard (Trimble or similar) resource grade handheld DGPS unit (GeoXT or similar) will be used with real-time correction (wide area augmentation system) to locate the river channel sampling stations within a 1 meter radius (68% of the time, commonly referred to 1 sigma accuracy). At each location, two anchors should be positioned upstream at least 10 feet from each other (Attachment A). Record the GPS coordinates on the sampling log. In the event a sampling station is too shallow to safely approach by boat, the next closest location with adequate depth will be sampled and a remark noted on the sampling log with the new GPS coordinates.

5) Record the depth of the river at each sampling station using the depth-finder or a weighted tape. If a weighted tape is used, read the tape at the river water surface when the weight touches the river floor. Record river depth on the sample log.

6) Samples will be collected from two depths at each river channel sampling station: 1 foot from the bottom of the river, and 1 foot from the water surface.

7) Samples are to be collected using a variable-speed peristaltic pump with ¼-inch tygon tubing attached to a weighted polypropylene rope (Attachment A) and a segment of silicone tubing for use in the peristaltic pump. Alternatively, a weighted pole can be used in place of the polypropylene rope. Dedicated tubing will be used for each sample depth at each sample station. Once the sampling depths have been calculated for each station, pre-cut two pieces of tygon tubing and attach them to the rope so that their intakes are at the proper sampling depths. Lower the weighted rope and tubing until the weight touches the river bottom and the tubing intakes are at the correct depths. Confirm river depth using the depth-finder or weighted tape. Attach the discharge end of the sample tubing to the flow cell of the water quality meter. Start the peristaltic pump and allow the flow cell to fill and the water to equilibrate for approximately 3 minutes, or until the temperature readings remain stable for 30 seconds (+/- 1 °C). Record the time, pH, conductivity, turbidity, dissolved oxygen, temperature, salinity, TDS, and ORP on the field log. Note and provide qualifying remarks if parameter readings are anomalous or unstable due to an instrument problem. Turn off the peristaltic pump, remove tubing from the flow cell, and restart the pump. Attach a 0.45 micron filter when sampling for Cr(T) by USEPA SW-846 Method 6020A or for Cr(VI) by USEPA Method 218.6. Refer to SOP-A6, *Sample Field Filtration and Preservation for Metals Analyses*. Pump approximately 500 ml through the system and begin filling the applicable sample bottles. Remove the filter prior to filling sample bottles for the other analyses, which do not require filtration. Ensure that the samples do not contact any source of metal. Place the samples on ice immediately after collection. Record all sample information on the field log.

8) Collect remaining samples for analyses according to the PST. Use a new piece of tygon tubing and change out the flexible silicone tubing in the peristaltic pump for each depth, at each location.

9) Follow applicable SOPs, the Procedures Manual, O&M Manual, and QAPP for sample handling and management, equipment decontamination, and investigation-derived waste (IDW) management (O&M Manual Volume 1, Section 6 during O&M or Appendix R of the C/RAWP during construction).

SHORELINE SAMPLING PROCEDURES

1) Prepare surface water sampling log (use attached form dated March 2005).
2) An industry standard (Trimble or similar) resource grade handheld DGPS unit (GeoXT or similar) will be used with real-time correction (wide area augmentation system) when available to locate the surface water sampling locations within a 1 meter radius (68% of the time, commonly referred to 1 sigma accuracy).
3) If sampling at locations RRB (Red Rock Bridge) or I-3 (or any other river station where water levels are required), measure river WL according to SOP-A7, *Water level Measurements*. Record WL value on sampling log.

   RRB: Water level measurement will be taken at the "X" on the bridge.

   I-3: There is a bolt and nut in the metal bridge, water level is recorded to the base of the nut (see photo)



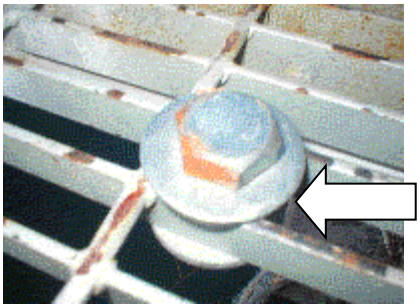

4) Where possible, place water quality meter probes in the Colorado River in a secure place near-shore for approximately 3 minutes, until the temperature reading stabilizes prior to reading field parameters from sample. Proceed with sampling activities while the temperature of the probes is equilibrating.
5) Collect samples for analyses according to event-specific PST.

   RRB: Samples are collected using a disposable bailer and directly filling the sample bottles. An attempt will be made to ensure the water is collected from several inches beneath the surface of the water. If the water is too shallow to use a bailer, than the surface water sampling pole can be used. Make a notation on the sample log that the sample was not collected from the recommended depth.

   I-3: Samples are collected using a disposable bailer and directly filling the sample bottles. An attempt will be made to ensure the water is collected from several inches beneath the surface of the water.

   All other locations:

   If collecting sample from the shore, samples are collected using a surface water sampling pole that is extended as far as possible in a safe manner (ideally 4 feet from the shoreline) and the sample collected approximately 6 inches below the surface, or by wading out and dipping the sampling bottle approximately 6 inches beneath the surface. The Sampling

containers are connected to the sampling pole and filled directly from the river. If it is not possible to connect the sampling bottle directly to the sampling pole, a portable sampling bottle will be used. The portable sampling bottle will be decontaminated between locations in accordance with SOP-A10, *Decontamination of Water Sampling Equipment* and protected from ambient conditions as prescribed therein. Prior to filling the portable sampling bottle it will be rinsed with surface water at the sampling location.

If the shoreline samples are collected from a boat, the boat must be able to pull within 4 feet of the shore at the sample location. Samples are collected using a peristaltic pump by lowering the intake tubing 4-inches below the water surface. New or dedicated tubing must be used at each sampling location.

Samples that are to be filtered as part of the analytical suite will be field filtered at the support vehicle using a portable peristaltic pump to transfer water from the collection vessel through a 0.45 micron filter in accordance with SOP-A6 and discharged into the laboratory supplied sample container. At minimum, the required sample volume and an additional 500 milliliters will be collected to ensure there is sufficient volume for filtration.

6) Record sample information on field log.

7) Fill a clean bucket with Colorado River water collected approximately 6 inches below surface using a bailer or by directly filling the bucket (invert until desired depth) for measurement of water quality field parameters. Where possible (all locations except RRB), flowing water is collected for a one-time temperature stable reading of the following field parameters:

   - pH
   - Specific conductance
   - ORP
   - Turbidity
   - Dissolved oxygen
   - Temperature

8) Measure field parameters by removing the water quality probes from the river and inserting the Horiba probes directly into the bucket. The Hach vial shall be filled from the bucket. Record all parameters on the field sheet. Record time for all measurements collected. Note and provide qualifying remarks if parameter readings are anomalous or unstable due to instrument problem.

9) Follow applicable SOPs, the Procedures Manual, the O&M Manual, and QAPP for sample handing and management, equipment decontamination, and IDW management (O&M Manual Volume 1, Section 6 during O&M or Appendix R of the C/RAWP during construction).

SOP-A5

Groundwater Sampling from Sonic Drilling Boreholes
Standard Operating Procedures for PG&E Topock Program

This standard operating procedure (SOP) addresses the procedures and equipment to be used for purging and collection of grab groundwater samples from boreholes during sonic drilling. When a pump sampling system (Prosonic "Isoflow") is available and feasible, Isoflow sampling is the preferred method. When Isoflow sampling is not available or not feasible then a bailer method will be used for grab groundwater sampling while drilling.

REQUIRED DOCUMENTS

1) Event-specific sampling and analysis plan (SAP), Work Plan or event-specific field instructions. Planned borehole depth, proposed well construction/specifications, and field sampling summary table, if available.
2) Applicable project work plan or monitoring plan. Refer to Topock Program Sampling, Analysis, and Field Procedures Manual (Procedures Manual).
3) Construction/Remedial Action Work Plan (C/RAWP) during the construction phase.
4) Operation and Maintenance (O&M) Manual, and the Quality Assurance Project Plan (QAPP) and Addendum to the QAPP (Appendix B of the O&M Manual Volume 2, Sampling and Monitoring Plan), as required during the O&M phase.
5) Topock Program Health and Safety Plan (HSP)
6) Previous sampling, drilling, or well construction logs from other boreholes or wells in the vicinity, if available
7) Blank sampling log and field notebook
8) Applicable SOPs may include:
   - SOP-A1, *Purging and Sampling of Groundwater Monitoring Wells, Well-Volume Method*
   - SOP-A2, *Purging and Sampling of 1-inch Diameter Groundwater Monitoring Wells, Modified Well-Volume Method*
   - SOP-A3, *Purging and Sampling of Active and Inactive Water Supply Wells*
   - SOP-A4, *Depth-Specific River Water Sampling*
   - SOP-A6, *Field Filtration*
   - SOP-A7, *Water Level Measurements*
   - SOP-A8, *Field Water Quality Measurements Using a Flow-through Cell*
   - SOP-A9, *Calibration of Field Instruments*
   - SOP-A10, *Decontamination of Water Sampling Equipment*
   - SOP-A11, *Total Depth Measurements*

- SOP-A12, *Field Water Quality Measurements for Grab Samples*
- SOP-A13, *Spill Prevention, Containment, and Control Measures for Monitoring Well Sampling*
- SOP-A14, *Pore Water Sampling*
- SOP-A16, *Access Routes*
- SOP-A18, *Purging and Sampling of Groundwater Monitoring Wells, Minimal Drawdown Method*
- SOP-A19, *Sampling of Groundwater Monitoring Wells, Hydrasleeve No Purge Method*
- SOP-A23, *Sample Handling and Custody*
- SOP-C1, Solinst Pressure Transducers

PREPARATION & SETUP

1) Review event-specific Work Plan or event-specific field instructions, Procedures Manual, O&M Manual, QAPP and the Addendum to the QAPP, and HSP.
2) Initiate field logbook for sampling activity.
3) Review sampling procedures and equipment, and planned sample depths with drilling contractor and field crew.
4) Inspect all required field equipment and calibrate field water quality (WQ) meters according to SOP-A9, *Calibration of Field Instruments*.
5) Inventory sample bottles, review required analyses, and understand lab courier schedule.
6) Field-check and setup sampling equipment: Decontaminated Isoflow pump or stainless steel bailer, rig hoist, generator, containers for purge water management, water level (WL) meter, WQ meters, flow-through cell, pump control and power supply, pump discharge/sampling tubing, health and safety equipment, etc.

PURGING AND SAMPLING PROCEDURES FOR ISOFLOW SAMPLING FROM BOREHOLE

1) Prepare groundwater sampling log (use field notebook and summarize relevant information on sampling form).
2) Insert the Isoflow into the sonic casing. After the Isoflow is set, retract the sonic casing approximately 10 feet. Record the top and bottom of this open borehole interval and identify the grab groundwater sample as the mid-point of this interval. If possible, a water level measurement can be taken before Isoflow pumping begins. Measure initial static WL according to SOP-A7, *Water Level Measurements*. Record WL value on sampling log. Monitor and record Isoflow pumping rate and WL measurements made while pumping. The length of the open borehole interval will be a field decision based on the frequency of Isoflow sampling and the formation conditions. Shorter open borehole intervals (as short as 5 feet) are appropriate for Isoflow sampling frequency of every 20 feet of drilled depth, or in heterogeneous conditions where it is desired to

sample from a specific conductive zone. Longer open borehole intervals of up to 20 feet are appropriate if the Isoflow sampling frequency is every 50 to 60 feet of drill depth.

3) Measure water quality parameters using a flow-through cell connected directly to the sampling port. If it is not possible to connect the flow-through cell, a clean 5-gallon bucket may be used by filling the bucket with purge water and inserting the instrument probes directly into the bucket. If the bucket is used, turbulence in the bucket should be minimized to the extent possible. Record time for all measurements collected. Note and provide qualifying remarks if parameter readings are anomalous or unstable due to instrument problems. Record the purge rate. Purge water should be contained in a portable water storage tank, as directed by the Field Team Manager.

4) Observations on sample appearance and clarity during purging and at sampling are required. For standardization, use a clear glass jar to collect and record observations of discharge water appearance during purging. Also note characteristics such as any odors associated with the discharge water. Record the following water quality data on the field data sheet: pH, specific conductance, ORP, turbidity, TDS, and dissolved oxygen, and temperature. Indicator parameters are considered stabilized, and thus sampling may commence, when 3 consecutive readings made several minutes apart fall within the following EPA-recommended stabilization criteria:

   - pH +/- 0.1 pH units
   - Specific conductance +/- 3%
   - ORP +/- 10 millivolts
   - Turbidity 10% NTU units or less unless other parameters have stabilized during an extended purge and turbidity is trending flat if still over 10 NTU units.
   - Dissolved oxygen +/- 0.3 mg/L

   However, parameter stabilization is not a requirement for sampling from open boreholes. Typically, TDS is used as a reliable indicator for borehole sampling at the site, given the known increasing concentration with depth across the site.

5) Collect samples for analyses according to event-specific SAP. For all samples, decrease the discharge rate to reduce water turbulence at the pump discharge point. Prepare sample containers and collect gas-sensitive analytes first. The preferred collection order will be volatile organic compounds (VOCs), semi-volatile organic compound (SVOCs), metals (including hexavalent chromium [Cr(VI)] and total chromium [Cr(T)]), then general chemistry (cations, anions, stable isotopes). Sample containers are to be filled by transferring water directly from the pump discharge to the appropriate sample container.

6) Record sample information, final WL, and purge volume data on field log.

7) Oversee the driller's removal and decontamination of the Isoflow sampling pump.

8) Oversee the driller in resuming drilling and soil sampling.

9) Follow applicable SOPs, the Procedures Manual and O&M Manual for sample handing and management, equipment decontamination, and investigation-derived waste (IDW) management (O&M Manual, Volume 1, Section 6 during O&M or Appendix R of the C/RAWP during construction).

PURGING AND SAMPLING PROCEDURES FOR BAILER SAMPLING FROM BOREHOLE

1) Prepare groundwater sampling log (use field notebook and summarize relevant information on sampling form).

2) Collect the grab groundwater sample by bailing the open hole interval below the sonic casing after removing a 10 to 20-foot sonic core run.

3) Sound the bottom of the borehole after removing the core barrel. Measure initial static WL according to SOP-A7, *Water Level Measurements*. Record WL value on sampling log.

4) Calculate 1-casing volume using measured WL depth, casing diameter, and total well depth information. Insert the decontaminated stainless steel bailer into the borehole and begin bailing a minimum of one casing volume. Purge water should be contained in a portable water storage tank, as directed by the Field Team Manager.

5) Measure water quality parameters using a clean 5-gallon bucket and inserting the instrument probes directly into the bucket. If the bucket is used, turbulence in the bucket should be minimized to the extent possible. Record time for all measurements collected. Record the following water quality data on the field data sheet: pH, specific conductance, ORP, turbidity, TDS, dissolved oxygen, sample appearance, and odor. Parameter stabilization is not a requirement for sampling from open boreholes. Typically, TDS is used as a reliable indicator for borehole sampling at the site, given the known increasing concentration with depth across the site.

6) Collect samples for analyses according to event-specific SAP. Prepare sample containers and collect gas-sensitive analytes first. The preferred collection order will be volatile organic compounds (VOCs), semi-volatile organic compound (SVOCs), metals (including hexavalent chromium [Cr(VI)] and total chromium [Cr(T)]), then general chemistry (cations, anions, stable isotopes). Sample containers are to be filled by transferring water directly from the bailer to the appropriate sample container. For all samples, handle the bailer with care and decant from the bailer slowly to minimize the potential for aeration and turbulence as containers are filled.

7) Record sample information, final WL, and purge volume data on field log.

8) Follow applicable SOPs, the Procedures Manual and O&M Manual for sample handing and management, equipment decontamination, and IDW management (O&M Manual, Volume 1, Section 6 during O&M or Appendix R of the C/RAWP during construction).

SOP-A6

Sample Field Filtration and Preservation for Metals Analyses
Standard Operating Procedures for PG&E Topock Program

This standard operating procedure (SOP) addresses the procedures and equipment to be used for collecting groundwater / surface water samples for field filtered metals analyses at the Topock site. Refer to SOP-A1, A2, A3, or A4 for specific groundwater and surface water sampling methods.

REQUIRED DOCUMENTS

1) Event-specific planned sample table (PST).
2) Applicable project work plan or monitoring plan. Refer to the PG&E Program Quality Assurance Project Plan, (QAPP) or the Addendum to the PG&E Program Quality Assurance Project Plan for the Topock Groundwater Remedy, as required.
3) Topock Program Health and Safety Plan (HSP).
4) Previous sampling logs or tabular table of historic field data.
5) Blank sampling logs and field notebook.

PREPARATION & SETUP

1) Review event-specific PST or event-specific field instructions, previous sampling logs, Procedures Manual, Operation and Maintenance (O&M) Manual, and HSP.
2) Initiate field logbook for sampling activity.
3) Inventory sample containers and labels, required analyses, and lab courier schedule.
4) Field-check and setup sampling equipment: field filters, buffering solution, acid, and sample containers.

FIELD-FILTRATION AND SAMPLE COLLECTION PROCEDURES FOR GROUNDWATER FROM MONITORING AND EXTRACTION WELLS

1) Follow SOPs A1 and A2.

Sample Collection

1) Once parameters are stabilized and a minimum 3-casing volumes have been removed from the well, disconnect the tubing from the flow-through cell and connect the inline 0.45 micron filter. (Note: do not change the pump rate, continue to purge from the well at the same rate as used during the stabilization of the parameters.)
2) Allow 500 milliliters (mL) to flow through the inline filter, prior to sample collection. Fill the sample container by transferring water directly from the filter discharge to the appropriate sample container.

Total Chromium and Metals analyzed by the 6000 / 7000 Series of SW 846 Methods and metals analyzed by EPA Methods of the 200 Series

i. Fill a laboratory provided pre-preserved sample container (250 or 500 mL poly containing (HNO_3). CARE MUST BE TAKEN NOT TO OVERFILL THE CONTAINER.

In the event that no pre-preserved sample containers are available, the sampling team will need to follow the following protocol.

ii. If you are preserving the container in the field, check the pH of the sample with laboratory provided pH paper. If the pH of the sample is greater than 2, add 5 drops of HNO_3. Close the container, shake and check the pH. Continue adding HNO_3 in 5-drop increments until the pH is less than 2.

iii. Record the total amount of HNO_3 added to the sample and the pH on the chain of custody and field form. Seal, label, and place the sample on ice.

Hexavalent Chromium Method SM3500 and EPA 218.6

i. Fill a laboratory provided pre-preserved sample container (250 mL poly containing (NH4)2S O4/NH4OH buffer solution) to the top of the container neck.

ii. Seal, label, and place the sample on ice.

In the event that no pre-preserved sample containers are available, the sampling team will need to follow the following protocol.

i. If you are preserving the container in the field, fill a laboratory provided sample container (250 mL poly) to approximately 235 mL, leaving headspace for the addition of buffer solution.

ii. Add 5 mL of laboratory provided buffer solution using a pipette. Place the lid on the sample container and shake gently. Check the pH using laboratory provided pH strips.

iii. If the pH is less than 9.3, add one drop of 20% NaOH, close container, gently shake, and check the pH. Continue until the pH is between 9.3 and 9.7.

iv. When the pH of the sample is between 9.3 and 9.7, record the total amount of pH buffer and NaOH added to the sample and the pH of the sample on the chain of custody and field form. Seal, label, and place the sample on ice.

3) Discard used pH paper(s) and filter in IDW bin.

4) Record sample information, final WL, and purge volume data on field log.

SOP-A7

Water Level Measurements
Standard Operating Procedures for PG&E Topock Program

This standard operating procedure (SOP) addresses the procedures and equipment to be used for manually measuring the depth to water at surface water locations, groundwater monitoring wells, and production wells.

REQUIRED DOCUMENTS:

- Event-specific planned sample table (PST).
- Applicable project work plan or monitoring plan. Refer to the Topock Program Sampling, Analysis, and Field Procedures Manual (Procedures Manual).
- Construction/Remedial Action Work Plan (C/RAWP) during the construction phase.
- Operation and Maintenance (O&M) Manual, and the Quality Assurance Project Plan (QAPP) and Addendum to the QAPP (Appendix B of the O&M Manual Volume 2, Sampling and Monitoring Plan), as required during the O&M phase.
- Topock Program Health and Safety Plan (HSP)
- Well construction logs/specifications
- Current site access map
- Previous water level data
- Water level data collection sheet and field notebook
- Blank sampling logs, if applicable
- Applicable SOPs may include:
  - SOP-A1, *Purging and Sampling of Groundwater Monitoring Wells, Well-Volume Method*
  - SOP-A2, *Purging and Sampling of 1-inch Diameter Groundwater Monitoring Wells, Modified Well-Volume Method*
  - SOP-A3, *Purging and Sampling of Active and Inactive Water Supply Wells*
  - SOP-A4, *Depth-Specific River Water Sampling*
  - SOP-A5, *Groundwater Sampling from Sonic Drilling Boreholes*
  - SOP-A6, *Field Filtration*
  - SOP-A7, *Water Level Measurements*
  - SOP-A8, *Field Water Quality Measurements Using a Flow-through Cell*
  - SOP-A9, *Calibration of Field Instruments*
  - SOP-A10, *Decontamination of Water Sampling Equipment*
  - SOP-A11, *Total Depth Measurements*

- SOP-A12, *Field Water Quality Measurements for Grab Samples*
- SOP-A13, *Spill Prevention, Containment, and Control Measures for Monitoring Well Sampling*
- SOP-A14, *Pore Water Sampling*
- SOP-A16, *Access Routes*
- SOP-A18, *Purging and Sampling of Groundwater Monitoring Wells, Minimal Drawdown Method*
- SOP-A19, *Sampling of Groundwater Monitoring Wells, Hydrasleeve No Purge Method*
- SOP-A23, *Sample Handling and Custody*
- SOP-C1, *Solinst Pressure Transducers*

PREPARATION & SETUP:

- Review event-specific PST or event-specific field instructions, previous sampling logs, Procedures Manual, O&M Manual, and HSP.
- Ensure that the water level indicator (WLI) has been decontaminated (check for label/tag) or decontaminate as needed following SOP-A10, *Decontamination of Water Sampling Equipment*.
- Initiate field logbook for sampling activity.
- Inspect all equipment and calibrate WLIs if multiple meters are being used according to SOP-A9, *Calibration of Field Instruments*.
- If a transducer is present in the well and it is necessary to remove the transducer to allow well access, first note the exact position of the transducer and refer to SOP-C1, *Solinst Pressure Transducers*, before proceeding.

REQUIRED EQUIPMENT/SUPPLIES:

- 200-foot or 400-foot WLI
- A set of spare batteries for the field equipment
- Well access keys, including gate keys if necessary
- De-ionized (DI) water spray bottle
- Nitrile gloves, paper towels, clipboard

MEASUREMENT PROCEDURES:

1. Prepare groundwater sampling log or water level data collection form.
2. Decontaminate the lower 5 feet of the water level probe before using by rinsing thoroughly with DI water according to SOP-A10*, Decontamination of Water Sampling Equipment*.
3. Place WLI probe into well, or measure from surface water monitoring point and lower the probe until the tone sounds. Raise the probe out of the water and gently shake the

line to remove any retained water. Adjust the WLI sensitivity if necessary. (The groundwater onsite is highly conductive and may cause a constant tone from the WLI. This means that the sensitivity is set too high; turn the knob to the left to decrease sensitivity. Conversely, if measuring surface water which typically has very low conductance, and you are having difficulty getting a tone, the sensitivity may be set too low; increase the sensitivity by turning the knob to the right.) Slowly lower the probe once again just until the tone sounds. Note depth to water (DTW) value at the measuring point on the PVC well casing. If there is no mark on the PVC casing, measure DTW at the northern edge of the PVC casing. Repeat the measurement 3 times to confirm DTW, and record to the nearest hundredth of a foot on the sampling log. Record well identification, time, date, DTW, and WLI number.

4. Replace pressure transducer if removed. Ensure that transducer is placed exactly as it was before removal.

5. Compare DTW measurement with previous data and note discrepancies on the sampling form. Repeat the previous steps as necessary if an unexpected discrepancy is noted.

6. Decontaminate any portion of the instrument that came in contact with water by rinsing thoroughly with DI water, or wiping with a DI water moistened paper towel according to SOP-A10, *Decontamination of Water Sampling Equipment*.

7. Close and secure well.

Note: Field water level measurements will be loaded into the PG&E database regularly. Once loaded into the database, manual water levels will be adjusted to groundwater elevations and converted to freshwater equivalent heads following the procedures outlined in SOP-A22, *Procedures for Calculation of Freshwater Equivalent Heads*.

SOP-A8

Field Water Quality Measurements Using a Flow-through Cell Standard Operating Procedures for PG&E Topock Program

---

This Standard Operating Procedure (SOP) provides general guidelines for using the YSI-556® water quality (WQ) meter and flow-through cell, or similar device for field measurements of pH, specific conductance, turbidity, dissolved oxygen, oxidation-reduction potential (ORP), and temperature of groundwater samples. Also addressed are procedures for measuring water sample turbidity using the Hach turbidity meter. All instruments will be calibrated daily in accordance with the manufacturer's instructions and SOP-A9, *Calibration of Field Instruments*.

REQUIRED DOCUMENTS:

- Event-specific planned sample table (PST).
- Applicable project work plan or monitoring plan. Refer to the Topock Program Sampling, Analysis, and Field Procedures Manual (Procedures Manual).
- Construction/Remedial Action Work Plan (C/RAWP) during the construction phase.
- Operation and Maintenance (O&M) Manual, and the Quality Assurance Project Plan (QAPP) and Addendum to the QAPP (Appendix B of the O&M Manual Volume 2, Sampling and Monitoring Plan), as required during the O&M phase.
- Topock Program Health and Safety Plan (HSP)
- Applicable SOPs may include:
  - SOP-A1, *Purging and Sampling of Groundwater Monitoring Wells, Well-Volume Method*
  - SOP-A2, *Purging and Sampling of 1-inch Diameter Groundwater Monitoring Wells, Modified Well-Volume Method*
  - SOP-A3, *Purging and Sampling of Active and Inactive Water Supply Wells*
  - SOP-A4, *Depth-Specific River Water Sampling*
  - SOP-A5, *Groundwater Sampling from Sonic Drilling Boreholes*
  - SOP-A6, *Field Filtration*
  - SOP-A7, *Water Level Measurements*
  - SOP-A9, *Calibration of Field Instruments*
  - SOP-A10, *Decontamination of Water Sampling Equipment*
  - SOP-A11, *Total Depth Measurements*
  - SOP-A12, *Field Water Quality Measurements for Grab Samples*

- SOP-A13, *Spill Prevention, Containment, and Control Measures for Monitoring Well Sampling*
- SOP-A14, *Pore Water Sampling*
- SOP-A16, *Access Routes*
- SOP-A18, *Purging and Sampling of Groundwater Monitoring Wells, Minimal Drawdown Method*
- SOP-A19, *Sampling of Groundwater Monitoring Wells, Hydrasleeve No Purge Method*
- SOP-A23, *Sample Handling and Custody*
- SOP-C1, *Solinst Pressure Transducers*

- Well construction logs/specifications
- Mobile Integrated Sample Tracking (MIST) handheld database
- Previous sampling logs or tabular historic field data
- Current site access map
- Blank sampling logs, maps, sample labels, chains of custody (COC's), and the designated groundwater sampling field notebook

REQUIRED EQUIPMENT:

- YSI-556 WQ meter or equivalent
- YSI-556 flow through cell or equivalent
- Hach 2100P turbidimeter or equivalent
- Trimble Rugged Reader hand held device with the CH2M HILL event specific MIST electronic data collection database loaded
- Spare batteries for each piece of equipment

PREPARATION & SETUP:

- Review event-specific PST or event-specific field instructions, previous sampling logs, Procedures Manual, and HSP.
- Acquire the existing field logbook for the specific field activity and initiate entries.
- Inspect all equipment : YSI-556 WQ meter or similar device, flow-through cell, o-rings, and fittings , Hach turbidity meter, distilled water in spray bottle.
- Prior to each day's use, clean the probes and flow-through cell and calibrate the field water quality (WQ) meters according to SOP-A9, *Calibration of Field Instruments* and the manufacturer's instructions. Calibration is performed to compensate for changes in potential within the measuring and reference electrodes, as well as any change of potential between them. The calibration also involves checking the slope of the measuring electrode. Slope defines the ability of the measuring electrode to change its output by 59.16 mV per pH unit at 25°C. Virtually all pH instruments use a slope adjustment to compensate for the inability of the measuring electrode to accurately

produce its output signal. If the slope falls outside the manufacturers' recommended range, the probe is replaced.

YSI-556 WQ Meter (or equivalent):

- Attach the probe body securely to the flow through cell. Attach the pump discharge line to the bottom fitting of the flow through cell, and a second discharge line to the top fitting of the flow through cell. Route the flow through cell discharge line to the purge water storage tank and secure.
- Prior to starting the pump, place the flow through cell into a 5 gallon bucket, ensure that all fittings are properly tightened and that spill containment is in place in accordance with SOP-A13, *Spill Prevention, Containment, and Control Measures for Monitoring Well Sampling.*
- Start the pump and allow the flow through cell to fill. Check for excessive leakage from the cell. A small amount of leakage is typical and allowable, and will be caught by the 5 gallon bucket. If leakage is excessive, stop the pump, remove the probe body from the flow through cell and inspect the O-ring and threads for damage. Replace if necessary, re-attach to flow through cell, and restart the pump.
- Ensure that there are no air bubbles entering the flow through cell since this will skew the dissolved oxygen and ORP readings.
- Allow instrument readings to stabilize and collect water quality data in MIST and on the field data sheet. Time the readings such that there at least 5 sets of readings collected over the length of the full purge. During operation of the WQ meter, the screen on the handheld portion should be shielded from direct sunlight.
- When sampling is complete, carefully remove the fittings and drain the flow through cell into the bucket. Rinse the instrument probes and flow through cell thoroughly with de-ionized water in accordance with SOP-A10, *Decontamination of Water Sampling Equipment,* catching the rinsate in the bucket.
- Mount the specially cut "dumping lid" on the bucket, and carefully pour the contents into the purge water storage tank.
- Carefully clean and store the WQ instrument in accordance with the manufacturer's recommendations in preparation for the next use.

HACH 2100P TURBIDIMETER:

- Turn the turbidity meter on and select the auto-range mode.
- Inspect the measurement vial for scratches, dirt or staining. Replace or clean as necessary.
- Fill the measurement vial with water and carefully wipe dry.
- If bubbles cling to the side of the vial, gently swirl the sample to sweep them loose.
- Place the measurement vial in the instrument, close the lid and press the measure button.

- Record the value on the sample sheet and in MIST.
- Clean and store the instrument and vial. Fill the vial with DI water for storage, this prevents water spotting.

SOP-A9

Calibration of Field Instruments
Standard Operating Procedures for PG&E Topock Program

This standard operating procedure (SOP) addresses the procedures and equipment to be used for calibration of field instruments at the Topock site. This SOP will be used for calibration of water level meters, YSI-556 water quality (WQ) meter, In-Situ Troll 9500 WQ meter, and Hach turbidity meter.

Required Documents:

- Event-specific planned sample table (PST).
- Applicable project work plan or monitoring plan. Refer to the Topock Program Sampling, Analysis, and Field Procedures Manual (Procedures Manual).
- Construction/Remedial Action Work Plan (C/RAWP) during the construction phase.
- Operation and Maintenance (O&M) Manual, and the Quality Assurance Project Plan (QAPP) and Addendum to the QAPP (Appendix B of the O&M Manual Volume 2, Sampling and Monitoring Plan), as required during the O&M phase.
- Equipment Manufacturers' Manuals
- Previous Calibration Records
- Field Equipment Binder (documents equipment servicing, calibration, etc.)
- Blank Calibration Sheets (see attached)
- Zobells ORP vs. temperature chart (see attached)

YSI-556 WQ Meter Calibration Equipment List:

- pH 4, 7, and 10 buffer solutions
- 1000 micro-mhos/cm conductivity solution
- Zobell's ORP check solution
- Spare batteries
- DI water sprayer
- Rinsate bucket
- Calibration vessels

In-situ Troll 9500 WQ Meter Calibration Equipment List:

- Quick-cal. solution
- DI water sprayer
- Spare batteries
- Rinsate bucket
- Calibration vessels
- Dissolved oxygen bubbler

Hach Turbidity Meter Calibration Equipment List:

- Lab DI water, NTU = <1
- Standard Hach solutions, NTU= 10 and NTU=100
- Spare batteries
- Paper towels or cloth rag

Preparation and Setup:

- Acquire the existing field logbook for the specific sampling activity and initiate entries.
- Always use fresh, unexpired solutions for calibration.
- Calibration should be performed prior to use each day, but, with the exception of dissolved oxygen (DO) on the YSI-556, may also be completed in the afternoon of the day before use.
- DO calibration on the YSI-556 is dependent on the current barometric pressure and should be calibrated immediately before use. The DO measurement from the YSI-556 will be used only as backup.
- The Rugged Dissolved Oxygen (RDO) sensor on the Troll 9500 is very resistant to drift and only requires a 100% saturated water calibration once every 3 months. The 0% oxygen calibration is only required once every 3 months as well. The optical O_2 sensor in the Troll 9500 will be used as the primary DO measurement instrument.
- Review Field Equipment Binder and equipment servicing records to anticipate next service.
- All equipment and solutions are stored in an air-conditioned office onsite to maintain their integrity.
- The YSI-556, and In-Situ Troll 9500 WQ meters and Hach turbidity meter will be used as the principal field instruments for measuring water quality parameters during groundwater and surface water sampling.

Calibration Procedures:

YSI-556 WQ Meter:

- Check expiration date of calibration solutions and discard if expired.
- DO calibration: Remove the protective probe cover and thoroughly rinse probes and probe cover with DI water. Gently shake the probe body to remove excess water. Pour about ¼ to ½ inch of water into the protective probe cover and screw slightly onto the probe body. The idea is that the ambient atmospheric pressure be maintained within the vessel, while retaining the water saturated air necessary for calibration. Turn the YSI-556 instrument on, it will be in "run" mode. Using the navigation buttons on the face of the instrument, hit "escape", then scroll down to "calibrate" and hit the "enter" key to begin calibration. Select DO, 2 mil PE (the probe style), then DO %. Enter the current barometric pressure in millimeters of Hg. Of the two YSI-556's on site, one has an on board barometer and the other doesn't. When calibrating the instrument with no barometer, simply enter the barometric pressure displayed by the other instrument. The

barometric pressure is also available at various web sites and also at airports. Press the "enter" key again to begin the calibration. Wait for 10 to 15 minutes for the DO probe to stabilize. When satisfied that that the reading is stable, press the "enter" key a final time to lock in the calibration. Record the temp., barometric pressure, and DO value on the calibration sheet.

- pH calibration: Thoroughly rinse the probes and calibration cups with DI water and gently shake off the excess liquid. Pour a sufficient volume of pH buffer 4 into a calibration cup and insert the probe body, ensuring that the pH probe is fully immersed, and stir gently. Using the navigation keys as above, "escape" from "run" mode and enter "calibration" mode. You may still be in calibration mode if you've just completed the DO calibration. Scroll down to the "pH" entry and push the "enter" key to begin the pH probe calibration process. Select a "3 point calibration", and enter the first pH buffer value (usually 4.00). Allow several minutes for the probe to stabilize, then press the "enter" key to lock in the calibration. Enter the calibration value on the calibration form. Repeat the above steps for the remaining 2 pH buffers, 7.00 and 10.00, rinsing the probe and calibration cup with DI water between buffers. Dispose of used solutions in the rinsate bucket and thoroughly rinse the calibration vessels with DI water.

- Specific conductance (SC) calibration: Thoroughly rinse the probes and calibration cups with DI water and gently shake off the excess liquid. Pour a sufficient volume of 1000 micro-mhos/cm specific conductivity (SC) solution into a calibration cup and insert the probe body, ensuring that the conductivity probe is fully immersed, and stir gently. The SC probe has sensors located very high in the probe, so near full submergence is required. Using the navigation keys as above, "escape" from "run" mode and enter "calibration" mode. You may still be in calibration mode if you've just completed the DO or pH calibrations. Scroll down to the "conductivity" entry and push the "enter" key to begin the SC probe calibration process. Select "specific conductance" and enter the SC solution value (usually 1.000 milli-mhos/cm) making sure of the correct units. The instrument may measure in **milli**-mhos/cm or micro-mhos/cm, and the calibration standard is commonly referenced in **micro**-mhos/cm (1.000 milli-mhos = 1000 micro-mhos). Allow several minutes for the probe to stabilize, then press the "enter" key to lock in the calibration. Enter the calibration value on the calibration form. Dispose of used solutions in the rinsate bucket and thoroughly rinse the calibration cups with DI water.

- ORP calibration: Thoroughly rinse the probes and calibration cups with DI water and gently shake off the excess liquid. Pour a sufficient volume of Zobells ORP solution into a calibration cup and insert the probe body, ensuring that the pH/ORP probe is fully immersed, and stir gently. Using the navigation keys as above, "escape" from "run" mode and enter "calibration" mode. You may still be in calibration mode if you've just completed the DO, pH or SC calibrations. Scroll down to the "ORP" entry and push the "enter" key to begin the ORP probe calibration process. Consult the Zobells ORP vs. temp. table provided with the ORP solution, and enter the temperature corrected ORP value into the instrument. Allow several minutes for the probe to stabilize, then press the "enter" key to lock in the calibration. Enter the calibration value on the calibration form. Dispose of used solutions in the rinsate bucket and thoroughly rinse the calibration vessels with DI water.

- Proceed with field measurements as needed while noting:
  - probes must be rinsed thoroughly with DI water after each well.
  - probes must always be submersed in liquid (DI water or pH 7 buffer when not in use).
  - absolutely no air bubbles or leaks should be present in the flow-through cell, repair and/or replace as needed.
  - ensure all readings have stabilized prior to recording a measurement.
  - all field parameters must be compared with historic data and documented on the field data sheet.

In-Situ Troll 9500 WQ multisensor probe:

- Check expiration date of calibration solutions and discard if expired.
- Connect the Troll 9500 to a data collection device (Trimble Recon or equivalent) and start the Win-situ 4 or Pocket-situ 4 program. Tap to highlight the "COM-1-19200" on the start-up screen, then tap "Find" at the bottom left of the screen to connect to the Troll 9500.
- While waiting for the device to connect, spray the Troll 9500 multi-sensors thoroughly with DI water and shake gently over the rinsate bucket to remove excess water. Fill the In-Situ calibration vessel to the "fill" line with "Quick Cal" solution and gently screw the calibration vessel onto the probe body.
- After the data collection device "finds" the Troll 9500, tap "parameters" near the top of the screen and wait for the device to change screens, then tap "Quick Cal" at the bottom right of the screen. After the screen changes, ensure that the correct parameters are checked (pH, SC, and ORP, but ***not*** DO), then tap "Next" to access the calibration screen.
- Tap "Run" in the middle left of the screen to start the calibration stabilization process. A tone will sound when the pH, ORP, SC, and temperature stabilize to nominal values. The calibration values can be accepted at this point, but it is better to continue to wait until a second tone sounds to indicate that the calibration values are completely stable.
- Tap the "Accept" button at the bottom of the screen to lock the calibration values. After accepting the calibration you will be asked if you want to view the calibration reports. Tap "yes", review, and document on the field calibration data sheet.

Dissolved oxygen (DO) calibration: (Note: DO calibration is only required once every 3 months) Remove the protective probe cover and thoroughly rinse probes and probe cover with DI water.

- Fill the In-Situ DO calibration bubbler with room temperature potable water and activate the pump to begin oxygenation of the water. Place the multi-sensor into the bubbler and ensure that the Rugged Dissolved Oxygen (RDO) sensor is not in the direct stream of the rising bubbles.
- Connect the Troll 9500 to a data collection device (Trimble Recon or equivalent) and start the Win-situ 4 or Pocket-situ 4 program. Tap to highlight the "COM-1-19200" on the

start-up screen, then tap "Find" at the bottom left of the screen to connect to the Troll 9500.

- After the data collection device "finds" the Troll 9500, tap "parameters" near the top of the screen and wait for the device to change screens, then double tap on "DO" in the parameter list. This will open the DO calibration menu. Tap "Calibrate" to continue.
- You will be asked if you want to edit the barometric pressure, tap "Yes", review and record the barometric pressure on the field calibration sheet. Tap "Next" to continue.
- The next screen will show three choices for calibration: "Calibrate", "Restore defaults then calibrate", and "Restore defaults and don't calibrate". Select option one or option two.
- Tap "Run" to begin the 100% DO saturation calibration routine. A tone will sound when the DO and temperature stabilize to nominal values. The calibration values can be accepted at this point, but it is better to continue to wait until a second tone sounds to indicate that the calibration values are completely stable.
- Tap "Accept" to lock in the 100% DO saturation calibration.
- Tap "Next" to continue. You will then be asked if you want to conduct a 0% DO calibration (Note: This calibration is only required once every 3 months). If you are completing a 100% saturated water calibration only, hit "Next", then "Next" again to complete the single point calibration.
- If you want to complete the 0% calibration as well, immerse the probe in the 0% DO solution (Sodium sulfite (Na2SO3), Catalog No. 0017670) and tap "Next", then "Run". The calibration routine will run as before. When the readings are stable hit "Accept", then review the calibration report and record on the field calibration data sheet. This will complete the DO calibration routine.
- Close the calibration report, tap "Parameters", then "Profiler" to enter run mode.
- If you intend to collect electronic data, name the file and hit "Next" to proceed to the live parameters screen. In this screen you may choose to collect continuous or snapshot data.
- If you do not intend to collect electronic data simply hit "Next" to go to the live parameters screen and record the data by hand as necessary.
- Proceed with field measurements as needed while noting:
  - probes must be rinsed thoroughly with DI water after each well.
  - probes must always be submersed in liquid (DI water when not in use).
  - absolutely no air bubbles or leaks should be present in the flow-through cell, repair and/or replace as needed.
  - ensure all readings have stabilized prior to recording a measurement.
  - all field parameters must be compared with historic data and documented on the field data sheet.

Hach Turbidity Meter:

- Perform a check as per manufacturer's instructions with Hach DI water and standard solutions. Wipe each calibration vial carefully to remove any dust and place into instrument.
- Press the measure button and record the result on the calibration sheet. Record reading, time, and date on calibration sheet for both DI water and standard solution.
- If the readings are within 10%, proceed with turbidity measurements; If not within this range, troubleshoot and repeat as needed.

Water-level Meters:

When using multiple water-level meters at the site it is necessary to calibrate each against the other at least once during the sampling event using the following procedure:

- At a well with shallow depth to water (less than 20 feet), without dedicated tubing, piping, pump, or transducer, lower each water level meter into the well and record the reading to the nearest hundredth of a foot on the calibration sheet along with water-level meter number, time, and date.
- Repeat step #1 at a well with deep depth to water (greater than 70 feet).

Horiba U-22/U-23, ORION, and Hach Turbidity Meter Calibration Sheet Updated: February 2005
Project Site: PG&E Topock

Calibrate each day prior to inititating sampling following SOP-A9.

U-22 instrument serial #								
Auto Calibration Performed: Y / N	**Units**	**Date/Time**	**Standard**	**Measured**	**Standard**	**Measured**	**Standard**	**Measured**
Auto Calibration solution reading:								
pH	pH		4.00		4.00		4.00	
Conductivity	mS/cm		4.49		4.49		4.49	
Turbidity	ntu							
DO	mg/L							
Temperature	celsius		25.00		25.00		25.00	
Salinity	%							
TDS	g/L							
ORP	mV (Ag/AgCl)							
Manufacturer, expiration date, lot number of auto calibration solution								
Manual Calibration Performed: Y / N								
Readings (Auto Calibration solution)								
pH	pH							
Conductivity	mS/cm							
Turbidity	ntu							
DO	mg/L							
Temperature	celsius							
Salinity	%							
TDS	g/L							
ORP	mV (Ag/AgCl)							
Manufacturer, expiration date, lot number of auto calibration solution								
Level II Solution Readings								
pH	pH		6.68		6.68		6.68	
Conductivity	mS/cm		53.00		53.00		53.00	
Turbidity	ntu		10 or 100		10 or 100		10 or 100	
DO	mg/L							
Temperature	celsius							
Salinity	%							
TDS	g/L							
ORP	mV (Ag/AgCl)							
Manufacturer, expiration date, lot number of solution								
Manual Calibration Performed: Y / N								
Readings (Level II solution)								
pH	pH							
Conductivity	mS/cm							
Turbidity	ntu							
DO	mg/L							
Temperature	celsius							
Salinity	%							
TDS	g/L							
ORP	mV (Ag/AgCl)							

Auto Calibration Performed: Y / N	Units	Date/Time	Standard	Measured	Standard	Measured	Standard	Measured
Auto Calibration solution reading:								
ORP - Zobell Check Only								
Temperature	celsius							
ORP	mV (Ag/AgCl)							
Manufacturer, expiration date, lot number of solution								
Within 25 mV of ORP standard? Y / N								
End of Day Zobell Check								
Temperature	celsius							
ORP	mV (Ag/AgCl)							
ORION Serial #								
pH 7 calibrated: Y / N								
pH 7 solution reading								
pH 10 Calibrated: Y / N								
pH 10 Solution Reading								
Manufacturer, expiration date, lot number of solution								
ORP - Zobell Check Only								
pH	pH							
Conductivity	mS/cm							
Turbidity	ntu							
DO	mg/L							
Temperature	celsius							
Salinity	%							
TDS	g/L							
ORP	mV (Ag/AgCl)							
Manufacturer, expiration date, lot number of solution								
Within 25 mV of ORP standard? Y / N								
Turbidity meter serial #								
	Units		**Standard**	**Measured**	**Standard**	**Measured**	**Standard**	**Measured**
Hach DI water reading	NTU		0					
Standard Solution Reading	NTU		10 or 100					
Manufacturer, expiration date, lot number of solution								
			DTW at one site well					
Water Level Meter ID								
Water Level Meter ID								
Water Level Meter ID								

Notes: * From the measured temperature value, find the closest standard temperature from the Zobell table and use the corresponding ORP standard.

Zobell solution-Temp/ORP Table

Temp in deg C	ORP (Ag/AgCl) (4M KCl) mV	Temp in deg C	ORP (Ag/AgCl) (4M KCl) mV
-5	270.0	23	233.6
-4	268.7	24	232.3
-3	267.4	25	231.0
-2	266.1	26	229.7
-1	264.8	27	228.4
0	263.5	28	227.1
1	262.2	29	225.8
2	260.9	30	224.5
3	259.6	31	223.2
4	258.3	32	221.9
5	257.0	33	220.6
6	255.7	34	219.3
7	254.4	35	218.0
8	253.1	36	216.7
9	251.8	37	215.4
10	250.5	38	214.1
11	249.2	39	212.8
12	247.9	40	211.5
13	246.6	41	210.2
14	245.3	42	208.9
15	244.0	43	207.6
16	242.7	44	206.3
17	241.4	45	205.0
18	240.1	46	203.7
19	238.8	47	202.4
20	237.5	48	201.1
21	236.2	49	199.8
22	234.9	50	198.5

SOP-A10

Decontamination of Water Sampling Equipment
Standard Operating Procedures for PG&E Topock Program

This standard operating procedure (SOP) addresses the procedures and equipment to be used for decontamination of sampling equipment at the Topock site.

REQUIRED DOCUMENTS:

- Event-specific planned sample table (PST).
- Applicable project work plan or monitoring plan. Refer to the Topock Program Sampling, Analysis, and Field Procedures Manual (Procedures Manual).
- Construction/Remedial Action Work Plan (C/RAWP) during the construction phase.
- Operation and Maintenance (O&M) Manual, and the Quality Assurance Project Plan (QAPP) (Appendix B of the O&M Manual Volume 2, Sampling and Monitoring Plan) as required during the O&M phase.
- Topock Program Health and Safety Plan (HSP)
- Applicable SOPs may include:
  - SOP-A1, *Purging and Sampling of Groundwater Monitoring Wells, Well-Volume Method*
  - SOP-A2, *Purging and Sampling of 1-inch Diameter Groundwater Monitoring Wells, Modified Well-Volume Method*
  - SOP-A3, *Purging and Sampling of Active and Inactive Water Supply Wells*
  - SOP-A4, *Depth-Specific River Water Sampling*
  - SOP-A5, *Groundwater Sampling from Sonic Drilling Boreholes*
  - SOP-A6, *Field Filtration*
  - SOP-A7, *Water Level Measurements*
  - SOP-A8, *Field Water Quality Measurements Using a Flow-through Cell*
  - SOP-A9, *Calibration of Field Instruments*
  - SOP-A11, *Total Depth Measurements*
  - SOP-A12, *Field Water Quality Measurements for Grab Samples*
  - SOP-A13, *Spill Prevention, Containment, and Control Measures for Monitoring Well Sampling*
  - SOP-A14, *Pore Water Sampling*
  - SOP-A16, *Access Routes*
  - SOP-A18, *Purging and Sampling of Groundwater Monitoring Wells, Minimal Drawdown Method*

- SOP-A19, *Sampling of Groundwater Monitoring Wells, Hydrasleeve No Purge Method*
- SOP-A23, *Sample Handling and Custody*
- SOP-C1, Solinst Pressure Transducers

REQUIRED EQUIPMENT AND SUPPLIES:

- 2 each decontamination vessels
- Potable water source
- Purified water source
- 120 volt power source
- 12 volt power source
- Alconox or Liquinox detergent
- Scrub brushes, nitrile gloves, and spray bottle
- Spill containment
- Pump specific submersible pump controllers

PREPARATION AND SET-UP:

- Acquire the existing field logbook for specific activity and initiate entries.
- Inspect all equipment necessary to carry out decontamination activities.
- Place spill containment in accordance with *SOP-A13 Spill Prevention, Containment, and Control Measures for Monitoring Well Development, Purging, and Sampling.*
- Fill a clean tub, bucket , PVC pipe, or similar vessel about 2/3 full of potable water and add the appropriate amount of Alconox or Liquinox detergent. If a new or clean vessel is not available a trash bag can be used to line the vessel prior to use.
- Fill a second tub, bucket, PVC pipe, or similar vessel about 2/3 full with clean potable water.
- Have purified water ready for final decon rinse use.

FIELD EQUIPMENT DECONTAMINATION PROCEDURES:

- Water-level Indicators: Any portion of a water-level indicator that contacts the groundwater must be decontaminated after use by rinsing with purified water, or wiping thoroughly with a paper towel moistened with purified water.
- Instrument probes: Water quality instrument probes (e.g., pH or specific ion electrodes, etc.) that come into contact with groundwater will be decontaminated by rinsing thoroughly with purified water.

- Submersible pumps - Grundfos Rediflo2: TransientRediflo2 submersible pumps will be decontaminated after each use with the following procedure:

  - If attached, detach the discharge tubing from the pump. Carefully drain any excess water to a bucket or the purge water tank. If dedicated, install the dedicated tubing cap to prevent leakage. Coil and store the dedicated tubing in a sealed and marked trash bag. If the tubing is not dedicated, discard.

  - Immerse the pump completely in an Alconox or Liquinox and potable water solution and run the pump at low to medium speed for one minute. A scrub brush will then be used to clean the outside of the pump body using the detergent solution.

  - Allow the pump to drain back into soapy water vessel, then immerse completely in clear potable water and run the pump at low to medium speed for one minute to rinse it. Ensure that the body of the pump is properly rinsed as well.

  - Allow the pump to drain back into clear water vessel, then rinse the pump body thoroughly by pouring purified or bottled water over the entire pump, ensuring that the purified water runs through the internal pump stages as well. Place the pump in a clean plastic bag and store in a plastic tub with the pump reel.

  - If the pump is not to be used immediately, or is to be stored, tag the pump or plastic tub as "decontaminated" with the date and team members initials.

  - If the decontamination vessels contain less than 2 gal. of volume each be sure to change all decontamination fluids for new solutions ***after each use***.

- Submersible pumps – 12V GeoSub, Typhoon, Mega-Monsoon: Transient DC-powered submersible pumps will be ***decontaminated*** after each use as above ***or*** using the following procedures. Pressurized gas powered bladder pumps will be decontaminated after each use using the following procedures:

  - If attached, detach the discharge tubing from the pump. Carefully drain any excess water to a bucket or the purge water tank. If dedicated, install the dedicated tubing cap to prevent leakage. Coil and store the dedicated tubing in a sealed and marked trash bag. If the tubing is not dedicated, discard.

  - Using the tools provided, disassemble the pump body to expose the pumping mechanism. Immerse all parts in an Alconox or Liquinox and potable water solution and scrub thoroughly with a clean scrub brush. Gently shake the pump parts to remove excess soapy water, taking care not to spill or splash any fluids outside of the decon. vessel. Immerse all pump parts in clean potable water and rinse thoroughly. Gently shake the pump parts to remove excess rinse water, taking care not to spill or splash any fluids outside of the decon. vessel. Carefully pour purified (or bottled) water over and through all pump parts. Gently shake the pump parts to remove excess purified rinse water, taking care not to spill or splash any fluids outside of the decon. vessel. Reassemble the pump and place in a clean plastic bag, then store in a plastic tub with the pump reel.

  - Bladder pumps do not typically include a reel and will be stored in a clean plastic bag only.

  - If the pump is not to be used immediately, or is to be stored, tag the pump or plastic tub as decontaminated with the date and team members initials.
  - If the decontamination vessels contain less than 2 gallons of volume each, be sure to change all decontamination fluids for new solutions ***after each use***.

- Water-level Indicators: Any portion of a water-level indicator that contacts the groundwater must be decontaminated after use by rinsing with purified water, or wiping thoroughly with a paper towel moistened with purified water.
- Instrument probes: Water quality instrument probes (e.g., pH or specific ion electrodes, etc.) that come into contact with groundwater will be decontaminated by rinsing thoroughly with purified water.
- Follow applicable SOPs, the Procedures Manual and O&M Manual for handling of investigation-derived waste (IDW) (O&M Manual Volume 1, Section 6 during O&M or Appendix R of the C/RAWP during construction).

SOP-A11

Total Depth Measurements
Standard Operating Procedures for PG&E Topock Program

This standard operating procedure (SOP) addresses the procedures and equipment to be used for manually measuring the total depth at groundwater monitoring wells and production wells.

REQUIRED DOCUMENTS

1) Event-specific sampling and analysis plan (SAP).
2) Applicable project work plan or monitoring plan. Refer to the Topock Program Sampling, Analysis, and Field Procedures Manual (Procedures Manual).
3) Construction/Remedial Action Work Plan (C/RAWP) during the construction phase.
4) Operation and Maintenance (O&M) Manual, and Quality Assurance Project Plan (QAPP; Appendix B of the O&M Manual Volume 2, Sampling and Monitoring Plan) as required during the O&M phase.
5) Topock Program Health and Safety Plan (HSP)
6) Well construction logs/specifications
7) Previous total depth data
8) Blank sampling logs and field notebook
9) Applicable SOPs may include:
   - SOP-A1, *Purging and Sampling of Groundwater Monitoring Wells, Well-Volume Method*
   - SOP-A2, *Purging and Sampling of 1-inch Diameter Groundwater Monitoring Wells, Modified Well-Volume Method*
   - SOP-A3, *Purging and Sampling of Active and Inactive Water Supply Wells*
   - SOP-A4, *Depth-Specific River Water Sampling*
   - SOP-A5, *Groundwater Sampling from Sonic Drilling Boreholes*
   - SOP-A6, *Field Filtration*
   - SOP-A7, *Water Level Measurements*
   - SOP-A8, *Field Water Quality Measurements Using a Flow-through Cell*
   - SOP-A9, *Calibration of Field Instruments*
   - SOP-A10, *Decontamination of Water Sampling Equipment*
   - SOP-A12, *Field Water Quality Measurements for Grab Samples*
   - SOP-A13, *Spill Prevention, Containment, and Control Measures for Monitoring Well Sampling*

- SOP-A14, *Pore Water Sampling*
- SOP-A16, *Access Routes*
- SOP-A18, *Purging and Sampling of Groundwater Monitoring Wells, Minimal Drawdown Method*
- SOP-A19, *Sampling of Groundwater Monitoring Wells, Hydrasleeve No Purge Method*
- SOP-A23, *Sample Handling and Custody*
- SOP-C1, *Solinst Pressure Transducers*

PREPARATION & SETUP

1) Review event-specific SAP or event-specific field instructions, previous sampling logs, Procedures Manual, O&M Manual, and HSP.

2) Ensure that the measurement probe (weighted tape measure) has been decontaminated (check for label/tag) or decontaminate as needed following SOP-A10 *Decontamination of Water Sampling Equipment.*

3) Ensure the tape measure is not crimped and that it will hang free and clear of any obstructions enabling it to fully extend to the bottom of the well.

4) Initiate field logbook for sampling activity.

5) If a transducer is present in the well and it is necessary to remove transducer to allow well access, refer to SOP-C1, *Solinst Pressure Transducers.*

6) Calibrate wrist-watch to the atomic clock at the Topock Compressor Station.

MEASUREMENT PROCEDURES

1) Prepare Total Depth measurement log (use attached form dated March 2005).

2) Decontaminate the entire length of the measuring tape before using, according to SOP-A10*, Decontamination of Water Sampling Equipment.*

3) Place measurement tape into well and lower until the bottom of the probe touches the bottom of the well. Note total depth (TD) measurement to mark on well casing, if there is no mark on casing measure to the north. Repeat 3 times and record final TD to the nearest hundredth of a foot on the log. Also note the condition of the well bottom (i.e. hard bottom, soft bottom). Record well identification, time, date, TD, and measurement tape identification.

4) Compare TD measurement with previous data and note discrepancies on the sampling form. Repeat step #8 if an unexpected discrepancy is noted.

5) Decontaminate the entirety of the measuring tape, or any portion of the instrument that came in contact with water, following SOP-A10, *Decontamination of Water Sampling Equipment*.

SOP-A12

Field Water Quality Measurements for Grab Samples
Standard Operating Procedures for PG&E Topock Program

This standard operating procedure (SOP) provides general guidelines for using the YSI-556 water quality (WQ) meter or similar device for field measurements of grab groundwater samples for pH, specific conductance, turbidity, dissolved oxygen, oxidation-reduction potential, and temperature. This SOP specifically covers collection of WQ measurements when a flow-through cell cannot be used (for example, surface water sample collection, active extraction well sampling, screening samples collected during drilling operations, grab samples from a well using a bailer, groundwater sample using a Hydrasleeve sampler, etc.). Instruments will be calibrated daily in accordance with the manufacturer's instructions and SOP-A9, *Calibration of Field Instruments*.

REQUIRED DOCUMENTS:

- Event-specific planned sample table
- Monitoring Plan for Groundwater and Surface Water Monitoring Program (current revision)
- Topock Program Sampling, Analysis, and Field Procedures Manual (Procedures Manual).
- Construction/Remedial Action Work Plan (C/RAWP) during the construction phase
- Operation and Maintenance (O&M) Manual, and Quality Assurance Project Plan and Addendum to the QAPP (Appendix B of the O&M Manual Volume 2, Sampling and Monitoring Plan) for site-wide groundwater monitoring requirements during the O&M phase
- Topock Program Health and Safety Plan
- Manufacturer's instructions for the YSI-556 WQ meter or equivalent
- Applicable SOPs may include:
  - SOP-A1, *Purging and Sampling of Groundwater Monitoring Wells, Well-Volume Method*
  - SOP-A2, *Purging and Sampling of 1-inch Diameter Groundwater Monitoring Wells, Modified Well-Volume Method*
  - SOP-A3, *Purging and Sampling of Active and Inactive Water Supply Wells*
  - SOP-A4, *Depth-Specific River Water Sampling*
  - SOP-A5, *Groundwater Sampling from Sonic Drilling Boreholes*
  - SOP-A6, *Field Filtration*
  - SOP-A7, *Water Level Measurements*
  - SOP-A8, *Field Water Quality Measurements Using a Flow-through Cell*
  - SOP-A9, *Calibration of Field Instruments*
  - SOP-A10, *Decontamination of Water Sampling Equipment*
  - SOP-A11, *Total Depth Measurements*
  - SOP-A13, *Spill Prevention, Containment, and Control Measures for Monitoring Well Sampling*

  - SOP-A14, *Pore Water Sampling*
  - SOP-A16, *Access Routes*
  - SOP-A18, *Purging and Sampling of Groundwater Monitoring Wells, Minimal Drawdown Method*
  - SOP-A19, *Sampling of Groundwater Monitoring Wells, Hydrasleeve No Purge Method*
  - SOP-A23, *Sample Handling and Custody*
  - SOP-C1, *Solinst Pressure Transducers*
- Well construction logs/specifications
- Previous sampling logs or tabular historic field data
- Current site access map
- Blank sampling logs
- Groundwater sampling field notebook

REQUIRED EQUIPMENT:

- YSI-556 WQ meter or equivalent
- YSI-556 storage cap or equivalent
- De-ionized water in a spray bottle
- Electronic data collection unit with a Topock-event-specific database
- Bucket and pouring lid

PREPARATION AND SETUP:

- Review event-specific planned sample table or event-specific field instructions, previous sampling logs, the Procedures Manual and O&M Manual, and the Health and Safety Plan.
- Acquire the existing field logbook for the specific field activity, and initiate entries documenting field activities.
- Inspect all equipment: YSI-556 WQ meter or similar device, de-ionized water in spray bottle, and electronic data collection unit.
- Prior to each day's use, calibrate the YSI-556 WQ, and clean the probes and storage cup of the field WQ meters according to SOP-A9, *Calibration of Field Instruments,* and the manufacturer's instructions. Document that instrument calibration has occurred and that parameters are calibrated to within the specifications in SOP-A9 in the field logbook.

MEASUREMENT PROCEDURES:

1. Transfer a small volume of sample water—enough to immerse all probes—into the WQ instrument storage cup or a small container. (The instrument storage cup is preferred as it can be sealed and will reduce risk for small volume water spills.)
2. Submerge the probes of the WQ meter into the water. Move the probe back and forth.
3. Allow instrument readings to stabilize, and collect WQ data in the electronic data collection unit and on the field data sheet. During operation of the WQ meter, the screen on the handheld portion should be shielded from direct sunlight.
4. Note in the field forms that the dissolved oxygen and oxidation-reduction potential results are approximate because a flow-through cell could not be used.

5. Water used for the WQ reading will be emptied into the purged wastewater tank.
6. When sampling is complete, rinse the instrument probes and the storage cup or small container with de-ionized water in accordance with SOP-A10, *Decontamination of Water Sampling Equipment,* catching the rinsate in the bucket.
7. Mount the specially cut "pouring lid" on the bucket, and carefully pour the contents into the purge water storage tank.
8. After sampling is complete, carefully clean and store the WQ instrument in accordance with the manufacturer's recommendations in preparation for the next use.

SOP-A13

Spill Prevention, Containment, and Control Measures for Monitoring Well Development, Purging, and Sampling Standard Operating Procedures for PG&E Topock Program

---

This standard operating procedure (SOP) addresses the procedures and equipment to be used for spill prevention, containment, and control associated with monitor well activities at the Topock site. This SOP applies to containment and control of potential spills from purge and equipment decontamination water generated during the development, purging, and sampling of monitoring wells.

REQUIRED DOCUMENTS:

- Topock Program Health and Safety Plan (HSP)
- Emergency Notification Binder
- Construction/Remedial Action Work Plan (C/RAWP) during the construction phase
- Operation and Maintenance Manual (O&M Manual) during the O&M phase
- Applicable SOPs may include:
  - SOP-A1, *Purging and Sampling of Groundwater Monitoring Wells, Well-Volume Method*
  - SOP-A2, *Purging and Sampling of 1-inch Diameter Groundwater Monitoring Wells, Modified Well-Volume Method*
  - SOP-A3, *Purging and Sampling of Active and Inactive Water Supply Wells*
  - SOP-A4, *Depth-Specific River Water Sampling*
  - SOP-A5, *Groundwater Sampling from Sonic Drilling Boreholes*
  - SOP-A6, *Field Filtration*
  - SOP-A7, *Water Level Measurements*
  - SOP-A8, *Field Water Quality Measurements Using a Flow-through Cell*
  - SOP-A9, *Calibration of Field Instruments*
  - SOP-A10, *Decontamination of Water Sampling Equipment*
  - SOP-A11, *Total Depth Measurements*
  - SOP-A12, *Field Water Quality Measurements for Grab Samples*
  - SOP-A14, *Pore Water Sampling*
  - SOP-A16, *Access Routes*
  - SOP-A18, *Purging and Sampling of Groundwater Monitoring Wells, Minimal Drawdown Method*

- SOP-A19, *Sampling of Groundwater Monitoring Wells, Hydrasleeve No Purge Method*
- SOP-A23, *Sample Handling and Custody*
- SOP-C1, *Solinst Pressure Transducers*

REQUIRED EQUIPMENT:

- Large (10′ by 11′ by 4″ deep) bermed spill containment pad. This pad is to be placed on the ground beneath the truck or utility task vehicle (UTV)-mounted purge water tank. It will be placed so that the work area at the rear of the vehicle is covered and so that small spills or drips from the purge tank or work area are captured.
- Medium (4′ by 8′ by 4″ deep) bermed spill containment pad. This pad is used at the FLUTe wells, Blatypus wells, and peristaltic wells, or for additional work space at any well.
- Small (4′ by 4′ by 4″ deep) bermed spill containment. This pad fits inside the UTV beds beneath the purge tank when sampling using UTVs (flood plain and special access wells, see SOP-A16).
- Small (2′ by 4′ by 4″ deep) bermed "pizza cut" spill containment pad for placement around well heads.
- Additional spill containment pads as necessary or as directed by the field team leader.
- Purge water tanks as appropriate for the task.
- Extra spring clamps, fittings, paper towels, and tools, etc.
- Small trash bags for temporary storage of dedicated transducers removed from wells.
- Trash pump, for transferring purge and decon. water at IM-3.
- 4 or more 5-gallon buckets and specially cut "pouring lid"
- Hydrophilic sorbent material (absorbent pads, booms, or mats)
- Plastic sheeting
- Shovel and/or other hand tools
- Plastic bags or buckets for storage and disposal of used sorbent material

PREPARATION & SETUP:

- Review this and other applicable SOPs, as well as the Emergency Notification Binder.
- Inspect all required spill containment pads for holes or tears that would compromise their effectiveness. Report such damage to the CH2M HILL Topock site coordinator or field team leader. Repair or replace damaged spill containment pads before use.
- Load spill containment equipment onto appropriate vehicle(s) and secure.

GENERAL SPILL PREVENTION PRACTICES:

- Topock is a "No Spill" site. We have all the necessary spill containment equipment, ***use it!***
- Place all items exposed to purge or decon water on the spill containment pads, not directly on the ground.
- No drops of well or purge water should ever hit the ground. Use 5-gallon buckets and spill containment pads to prevent any water from sampling equipment reaching the ground.
- Double check all fittings and connections for tightness before activating any pump.
- Check all fittings and connections for leaks immediately after starting the pump.
- Place the flow through cell and associated fittings in a 5 gal. bucket. There is often a small amount of leakage from the cell.
- If a spill does occur, immediately stop the pump, or take such action as is necessary to safely mitigate the volume or severity of the spill.
- Report all spills to the CH2M HILL site coordinator or field team leader immediately, no matter how small.
- Only use restroom facilities at the CH2M HILL job trailer or the IM-3 facility.

SPILL RESPONSE ACTIONS:

In the event purge water is spilled outside of containment basins, the field team will take the following actions:

Procedures:

- Stop the pump or take what action is necessary to safely stop or mitigate the volume or severity of the spill.
- Notify the CH2M HILL Site Coordinator or field team leader immediately, no matter how small the spill, and follow their instructions. PG&E and CH2M HILL staff may want to photo document the incident, so do not proceed with any clean-up until cleared to do so.
- The CH2M HILL Site Coordinator will perform the notifications as required in the Emergency Notification Binder and complete the Notification Documentation Form provided in the Binder.
- When cleared to do so, use sorbent material and bermed spill containment to absorb and contain the spilled purge water if possible.
- Transfer any contained purge water into the purge water tank.
- When cleared to do so, manually dig up any saturated soil and place in 5-gallon bucket(s) or other appropriate containers for disposal.

- Dispose of containerized soil, used sorbent material, and gloves in accordance with O&M Manual Volume 1, Section 6 during O&M or Appendix R of the C/RAWP during construction.

CONTAINMENT SCENARIO 1: SAMPLING OF UTV ACCESS WELLS USING DEDICATED OR TRANSIENT PUMPS:

For monitor well sampling at UTV access wells with dedicated or transient pumps, purge water is pumped to a tank placed on 4′ X 4′spill containment pad in the back of the UTV. The UTV is parked on a 10′ X 11′ spill containment pad adjacent to the monitoring well to be sampled. Purge water is pumped directly to a YSI flow through cell contained in a 5 gal. bucket in the work area, and then into the purge tank through a discharge tube at the appropriate purge rate for that well. The small amount of leakage from the YSI flow cell is contained in a 5-gallon bucket and is manually transferred into the purge water tank using the special "pouring lid" to prevent spills.

Potential Spill Scenarios:

- Overfill of UTV-mounted purge water tank
- Failing to place lid on purge tank before mobilizing to next well
- Spills at time of tubing disconnection from tank or during manual transfer into tank from bucket
- Spills from tubing disconnection or leakage from flow cell
- Spills from tubing disconnection at well head between dedicated and non-dedicated tubing
- Spilled bucket of purge water from flow cell
- During removal of dedicated transducers from wells

Procedures:

- Before mobilization to any well, place appropriately sized tanks on small 4′ X 4′ bermed spill containment pads in UTV beds.
- Evaluate the remaining capacity of the tank prior to initiating well purging to ensure that there is sufficient capacity to hold the amount of purge water anticipated to be generated during purging of the well. Offload if needed following procedures under Containment Scenario 4.
- At the well, deploy the large 10′ X 11′ bermed spill containment pad adjacent to the well. Park the UTVs with purge water tanks on the spill pad and as close to the well head as possible, while still leaving room to work. Deploy a second or third spill containment pad as necessary to ensure adequate coverage. There should be no exposed soil between the work area and the well.
- Place the small 2′ X 4′ "pizza cut" bermed spill containment around well head.

- For a dedicated pump well: Attach the transfer tubing to the existing dedicated pump tubing at the top of the well so that the tubing connection is located ***inside*** the well protective casing and any leakage will be contained within the well head.
- Secure the transfer tubing to the bottom connection of the flow cell using hose clamps. Attach the flow through cell discharge tubing to the top fitting of the flow through cell and place the cell into a 5 gal. bucket to contain any leakage from the cell.
- Route the discharge tubing to the purge tank opening and secure using spring clamps.
- Stuff a large, unused trash bag into the top of the protective casing above the tubing connection so that any leakage or spray will be contained inside the protective casing.
- For a transient pump well: Attach the new or well specific dedicated discharge tubing to a decontaminated transient submersible pump and install into well following *SOP-A1 Purging and Sampling of Groundwater Monitoring Wells.* Transport the pump to the well head in a 5 gal. bucket to contain leakage of any residual water. With no tubing connections at the top of the well, no additional spill containment is necessary at the well head.
- All equipment is to be placed on the 10′ X 11′ bermed spill containment pad prior to the start of purging.
- Double check all tubing connections for tightness before activating the pump.
- Double check that discharge tubing is properly secured with spring clamp at purge water tank.
- Immediately after starting the pump, check all tubing connections for leakage.
- During purging, field staff will monitor the transfer of water into the purge water tank. When the tank reaches 80% full, discontinue purging to that tank. Depending on the situation, either stop the pump and properly dispose of the purge water according to the O&M Manual Volume 1, Section 6 during O&M or Appendix R of the C/RAWP during construction.
- At the completion of purging, stop the pump and carefully disconnect the discharge tubing from both ports of the flow through cell, working inside the bucket and over containment, and allow the tubing and flow cell to drain inside of the bucket.
- Working over containment, clamp the pump discharge tubing inside a 5 gal. bucket and start the pump at low speed. Collect the sample directly from the pump discharge line, allowing excess flow to pump into the 5 gallon bucket.
- When sampling is complete, stop the pump and carefully disconnect and drain all other tubing while working over spill containment to ensure that any drips of purge water are contained on the pad.
- If a transient pump was installed, double fold the end of the dedicated down-hole tubing and secure with wire-ties to prevent leakage during pump removal. Carefully remove the pump from the well while wiping the water and power lines as they emerge with a paper

towel, and coiling the tubing neatly. As the pump clears the well, place it immediately in a 5 gal. bucket, over containment, to drain.

- Disconnect the dedicated tubing from the pump and double fold the end of the tubing, securing with wire ties to prevent leakage of the residual water still contained in the tubing. Place the tubing in its designated storage bag. At the end of the day, use compressed air from the sampling truck to carefully push the residual water out of the dedicated tubing and into the purge tank.
- Place the specially cut "pouring lid" on any 5 gallon buckets containing purge water and carefully pour contents into the purge water tank.
- If any purge water is present on the containment pad, either wipe up the water using paper towels, or collect it a bucket and dump it to the purge tank. Dispose of the wet paper towels with the rest of the contaminated trash.
- Close purge water tank openings and ensure that the tank is well secured to the UTV.
- Before mobilization, check back of UTVs for any drips that may have occurred and wipe up with a paper towel if needed.
- Pull the UTV off of the spill containment pad, fold the pad, load, and secure.
- Mobilize to the next well to be sampled and repeat the preceding steps.
- When the UTV-mounted purge water tank is 80% full, continue with procedures under Containment Scenario 4 to dump the water at IM-3.

CONTAINMENT SCENARIO 2: SAMPLING UTV ACCESS WELLS USING A PERISTALTIC PUMP:

For monitor well sampling using a peristaltic pump, purge water is placed in a small UTV or truck mounted purge tank, or 5 gallon bucket with lid. The purge tank or bucket is situated adjacent to the monitoring well to be sampled. Purge water is pumped directly to a YSI flow cell in a 5 gal. bucket, then to a 5-gallon bucket with lid, or purge tank for storage. The purge water in the bucket is manually dumped to the purge tank using the specially cut "pouring lid" to prevent spills.

Potential Spill Scenarios:

- Spills at time of hose disconnection from pump mechanism
- Spills during manual transfer into purge tank from bucket
- Spills from leakage from flow cell
- During removal or placement of tubing
- Disrupted bucket of purge water

Procedures:

- Before mobilization to any well, place appropriately sized tank on small 4' X 4' bermed spill containment pad in UTV bed.

- Evaluate the remaining capacity of the tank prior to initiating well purging to ensure that there is sufficient capacity to hold the amount of purge water anticipated to be generated during purging of the well. Offload if needed following procedures under Containment Scenario 4.
- At the well, deploy the large 10′ X 11′ bermed spill containment pad adjacent to the well. Park the UTV with the purge water tank on the spill pad and as close to the well as possible, while still leaving room to work. Deploy a second or third spill containment pad as necessary to ensure adequate coverage. There should be no exposed soil between the work area and the well head.
- Place the small 2′ X 4′ "pizza cut" bermed spill containment around well head. With no tubing connections at the well, there is no need for additional spill containment at the well-head.
- Install the dedicated down-hole tubing. Take care to ensure that any residual water in the tubing is contained on spill pads. In the slant wells (MW-52's, 53's and 56's) the dedicated tubing is stored in the well itself.
- Attach the peristaltic pump-head tubing to both the dedicated down-hole tubing and the pump discharge tubing, and use a wire-tie to secure each. Clamp the pump-head tubing into the peristaltic pump, ensuring that it is not pinched in the clamp (this could wear a hole), and place the pump on the 10′ X 11′ bermed spill containment pad.
- Attach the pump discharge tubing to the bottom connection of the flow cell and secure with a wire-tie. Attach the flow cell discharge tubing to the top fitting of the cell, secure with a wire-tie and place the cell into a 5 gal. bucket to contain any leakage.
- Route the discharge tube to a 5-gallon bucket or purge tank and secure with a spring clamp. Make sure additional empty purge buckets are available.
- All equipment is to be placed on the 10′ X 11′ bermed spill containment pad prior to the start of purging.
- Double check all tubing connections for tightness before activating the pump.
- Double check that discharge tubing is properly secured with spring clamp at purge water tank or bucket.
- Immediately after starting the pump, check all tubing connections for leakage.
- During purging, field staff will monitor the transfer of water into the bucket or purge water tank. If purging to a 5 gallon bucket, briefly shut down the pump and move the discharge line to another 5 gal. bucket when the bucket reaches 50% full, then use the specially cut "pouring lid" to transfer the water from the purge bucket to the purge tank. If purging to the UTV mounted purge tank, discontinue purging to that tank when the tank reaches 80% full. Depending on the situation, either stop the pump and properly dispose of the purge water according to O&M Manual Volume 1, Section 6 during O&M or Appendix R of the C/RAWP during construction, or briefly stop the pump and switch to a different purge bucket or tank. Such investigation-derived waste (IDW) is typically

disposed of to the process stream at IM-3. Refer to Containment Scenario 4 below for instructions.

- At the completion of purging, stop the pump and carefully disconnect the discharge tubing from the flow through cell, working inside the bucket and over containment, and allow the tubing and flow cell to drain inside of the bucket.
- Working over containment, clamp the pump discharge tubing inside a 5 gal. bucket and start the pump. Collect the sample directly from the pump discharge line, allowing excess flow to pump into the 5 gallon bucket.
- When sampling is complete, stop the pump and carefully disconnect and drain all other tubing while working over spill containment to ensure that any drips of purge water are contained on the pad.
- Remove the dedicated tubing from the well and carefully drain any remaining water into purge tank. Working over containment, coil the tubing and place it into the marked ziplock bag from which it was removed.
- Place the specially cut "pouring lid" on any 5 gallon buckets containing purge water and carefully pour contents into the purge water tank.
- If any purge water is present on the containment pad, either wipe up the water using paper towels, or collect it a bucket and dump it to the purge tank. Dispose of the wet paper towels with the rest of the contaminated trash.
- Close purge water tank openings and ensure that the tank is well secured to the UTV.
- Before mobilization, check back of UTVs for any drips that may have occurred and wipe up with a paper towel if needed.
- Pull the UTV off of the spill containment pad, fold the pad, load, and secure.
- Mobilize to the next well to be sampled and repeat the preceding steps.
- When the UTV-mounted purge water tank is 80% full, continue with procedures under Containment Scenario 4.

CONTAINMENT SCENARIO 3: SAMPLING TRUCK ACCESS MONITOR WELLS:

For monitor well sampling in upland, truck accessed areas of the site, purge water is placed in a 400-gallon truck-mounted tank. Purge water is pumped directly into this tank via a transfer tube at rates up to 10 gpm. Purge water leakage from the YSI flow cell is contained in a 5-gallon bucket and is manually transferred into the purge water tank using the specially cut "pouring lid". For upland wells that are UTV access only, follow procedures under Containment Scenarios 1 or 2, as applicable.

Potential Spill Scenarios:

- Overfill of truck-mounted purge water tank
- Spills at time of hose disconnection from tank or during manual transfer into tank from bucket

- Spills from hose disconnection at well head between dedicated and non-dedicated tubing
- Spills from hose disconnection or leakage from flow cell
- During removal of dedicated transducers in wells
- Disrupted bucket of purge water
- During removal or placement of pump and/or tubing
- Spills or leaks from "splitter" if used at wells with higher velocity purge rates

Procedures:

- Evaluate the remaining capacity of the tank prior to initiating well purging to ensure that there is sufficient capacity to hold the amount of purge water anticipated to be generated during purging of the well. Offload if needed following procedures under Containment Scenario 4.
- At the well, deploy the large 10′ X 11′ bermed spill containment pad adjacent to the well. Park the sampling truck on the spill pad and as close to the well as possible, while still leaving room to work. Deploy a second or third spill containment pad as necessary to ensure adequate coverage. There should be no exposed soil between the work area and the well head.
- Place the small 2′ X 4′ "pizza cut" bermed spill containment around well head.
- For a dedicated pump well: Attach the transfer tubing to the existing dedicated pump tubing at the top of the well using the riser and valve provided.
- If a splitter is used to split the flow between the flow cell and the purge tank at high flow wells, wrap the splitter with a fresh trash bag such that any leakage or spray will be contained inside the well head or on containment. Route the high flow purge line to the purge tank and secure.
- For a transient pump well: Working over containment, attach the well specific dedicated discharge tubing to a decontaminated transient submersible pump and install into well following *SOP-A1 Purging and Sampling of Groundwater Monitoring Wells.* Transport the pump to the well head in a 5 gal. bucket to contain leakage of any residual water. With no tubing connections at the top of the well, no additional spill containment is necessary at the well head.
- Secure the transfer tubing to the bottom connection of the flow cell using hose clamps. Attach the flow through cell discharge tubing to the top fitting of the flow through cell and place the cell into a 5 gal. bucket to contain any leakage from the cell.
- Route the flow cell discharge tubing to the purge tank opening and secure using spring clamps.
- All equipment is to be placed on the 10′ X 11′ bermed spill containment pad prior to the start of purging.
- Double check all tubing connections for tightness before activating the pump.

- Double check that discharge tubing is properly secured with spring clamp at purge water tank.
- Immediately after starting the pump, check all tubing connections for leakage.
- During purging, field staff will monitor the transfer of water into the purge water tank. When the tank reaches 90% full, discontinue purging to that tank. Stop the pump and properly dispose of the purge water according to the O&M Manual Volume 1, Section 6 during O&M or Appendix R of the C/RAWP during construction. Such IDW is typically disposed of to the process stream at IM-3. Refer to Containment Scenario 4 below for instructions. Resume pumping to the empty tank.
- At the completion of purging, stop the pump and carefully disconnect the discharge tubing from the flow through cell, working inside the bucket and over containment, and allow the tubing and flow cell to drain inside of the bucket.
- Clamp the pump discharge line to the sink at the rear of the sampling truck and start the pump at low speed. Collect the sample over containment directly from the pump discharge line, allowing excess flow to pump into the sink.
- When sampling is complete, stop the pump and carefully disconnect and drain all other tubing while working over spill containment to ensure that any drips of purge water are contained on the pad.
- If a transient pump was installed, double fold the end of the dedicated down-hole tubing and secure with wire-ties to prevent leakage during pump removal. Carefully remove the pump from the well while wiping the water and power lines as they emerge with a paper towel, and coiling the tubing neatly. As the pump clears the well, place it immediately in a 5 gal. bucket, over containment, to drain.
- Disconnect the dedicated tubing from the pump and double fold the end of the tubing, securing with wire ties to prevent leakage of the residual water still contained in the tubing. Place the tubing in its designated storage bag. At the end of the day, use compressed air from the sampling truck to carefully push the residual water out of the dedicated tubing and into the purge tank.
- Place the specially cut “pouring lid” on any 5 gallon buckets containing purge water and carefully pour contents into the purge water tank.
- If any purge water is present on the spill containment pad, either wipe up the water using paper towels, or collect it a bucket and dump it to the purge tank. Dispose of the wet paper towels with the rest of the contaminated trash.
- Ensure that all water is pumped from sink into the truck-mounted tanks. Inspect back of truck and sink and wipe off any purge water drops with paper towel.
- Before mobilization, ensure that all tank openings are secure, and wipe up any drips that may have occurred in the work area.
- Mobilize to the next well to be sampled and repeat the preceding steps.

- When the truck mounted purge water tank is 90% full, continue with procedures under Containment Scenario 4 below.

CONTAINMENT SCENARIO 4: TRANSFER OF PURGE WATER FROM TRUCK MOUNTED TANK OR UTV MOUNTED TANK TO IM-3:

When the truck or UTV mounted purge water tank requires emptying, the following procedures will be used. Purge water is transferred into a 5,500-gallon storage tank at the IM-3 Treatment Plant, at rates up to 20 gpm. The 5,500-gallon tank is located within a permanent containment structure.

Potential Spill Scenarios:

- Overfill of tank at final storage location
- Pump or transfer hose leakage during pumping into tank or at time of hose disconnection.

Procedures:

- See an IM-3 plant operator for assistance in transferring purge water.
- Park the truck or UTV on the bermed spill containment pad at the IM-3 transfer location.
- Follow the instructions of the IM-3 plant operator and use the trash pump to transfer purge water from the purge tank to the receiving tank. The IM-3 plant operator and field staff will be present during the entire transfer to monitor the water level in the receiving tank and to ensure no leakage or spills occur. If the receiving tank approaches being full, discontinue transfer operations.
- At the completion of transfer operations, take care when removing the transfer hose from the truck or UTV mounted purge water tank opening, since some residual water will be present in the hose.
- Secure tank openings on the truck-mounted or UTV-mounted purge water tank.
- Proceed to the next well for sampling.

SOP-A14

Pore Water Sampling
Standard Operating Procedures for PG&E Topock Program

This standard operating procedure (SOP) addresses the procedures and equipment to be used for pore water sampling at the Topock site. This SOP should be used for pore water sampling stations on the Colorado River.

REQUIRED DOCUMENTS

1) Event-specific sampling and analysis plan (SAP).
2) Pore Water and Seepage Study Work Plan. Refer to the Topock Program Sampling, Analysis, and Field Procedures Manual (Field Procedures Manual).
3) Construction/Remedial Action Work Plan (C/RAWP) during the construction phase.
4) Operation and Maintenance (O&M) Manual, and Quality Assurance Project Plan (QAPP) (Appendix B of the O&M Manual Volume 2, Sampling and Monitoring Plan) as required during the O&M phase.
5) Topock Program Health and Safety Plan (HSP).
6) Blank sampling logs and field notebook.
7) Applicable SOPs may include:
   - SOP-A1, *Purging and Sampling of Groundwater Monitoring Wells, Well-Volume Method*
   - SOP-A2, *Purging and Sampling of 1-inch Diameter Groundwater Monitoring Wells, Modified Well-Volume Method*
   - SOP-A3, *Purging and Sampling of Active and Inactive Water Supply Wells*
   - SOP-A4, *Depth-Specific River Water Sampling*
   - SOP-A5, *Groundwater Sampling from Sonic Drilling Boreholes*
   - SOP-A6, *Field Filtration*
   - SOP-A7, *Water Level Measurements*
   - SOP-A8, *Field Water Quality Measurements Using a Flow-through Cell*
   - SOP-A9, *Calibration of Field Instruments*
   - SOP-A10, *Decontamination of Water Sampling Equipment*
   - SOP-A11, *Total Depth Measurements*
   - SOP-A12, *Field Water Quality Measurements for Grab Samples*
   - SOP-A13, *Spill Prevention, Containment, and Control Measures for Monitoring Well Sampling*
   - SOP-A16, *Access Routes*

- SOP-A18, *Purging and Sampling of Groundwater Monitoring Wells, Minimal Drawdown Method*
- SOP-A19, *Sampling of Groundwater Monitoring Wells, Hydrasleeve No Purge Method*
- SOP-A23, *Sample Handling and Custody*
- SOP-C1, *Solinst Pressure Transducers*

PREPARATION & SETUP

1) Review event-specific SAP or event-specific field instructions, Work Plan, O&M Manual, and HSP.
2) Initiate field logbook for sampling activity.
3) Inspect all equipment and calibrate field water quality (WQ) meters according to SOP-A9, *Calibration of Field Instruments*.
4) Inventory sample bottles, required analyses, and confirm the lab courier schedule.
5) Field-check and set up sampling equipment: drive point sampler, WQ meters, health and safety apparatuses (life vest, rescue rope, life preserver), water depth meter or depth-finder, weighted tape, peristaltic pump, filters, sufficient tygon and silicone tubing, sampling equipment, etc.
6) Conduct tailgate meeting to discuss health and safety issues and event objectives.

SAMPLING PROCEDURES

1) Prepare pore water sampling log (use attached form).
2) The sampling team will travel to each pore water sampling station in a motorized boat. A safety inspection of the boat will be performed by the field crew prior to boarding (check for fire extinguisher, etc.). Samples will be collected from selected stations along transects across the river.
3) An industry standard (Trimble or similar) resource grade handheld DGPS unit (GeoXT or similar) will be used with real-time correction (wide area augmentation system) to locate the sampling stations within a 1 meter radius (68% of the time, commonly referred to 1 sigma accuracy). At each location, two anchors should be positioned upstream at least 10 feet from each other. Record the GPS coordinates on the sampling log. In the event a sampling station is too shallow to safely approach by boat, the next closest location with adequate depth will be sampled and a remark noted on the sampling log with the new GPS coordinates.
4) Record the depth of the river at each sampling station using the depth-finder or a weighted tape. If a weighted tape is used, read the tape at the river water surface when the weight touches the river floor. Record river depth on the sample log.
5) Samples will be collected at a depth below the river bottom determined from the pilot study.
6) Samples are to be collected using a drive point sampler and variable-speed peristaltic pump with ¾-inch tygon tubing. Dedicated tubing will be used for each sample. Once

the sampling depths have been calculated for each station, pre-cut two pieces of tygon tubing and attach them to the drive point sampler. Lower the sampler and tubing until the tip of the sampler touches the river bottom. Then hand-drive the sampler into the river sediment until desired depth is achieved. Attach the discharge end of the sample tubing to the flow cell of the water quality meter. Start the peristaltic pump and purge 3 sampler volumes. Record the time, pH, conductivity, turbidity, dissolved oxygen, temperature, salinity, TDS, and ORP on the field log. Note and provide qualifying remarks if parameter readings are anomalous or unstable due to an instrument problem. Turn off the peristaltic pump, remove tubing from the flow cell, and restart the pump. Attach a 0.45 micron filter when sampling for Cr(T) by USEPA Method 6010B or for Cr(VI) by USEPA Method 7199. Refer to SOP-A6 in the Field Procedures Manual for filtration procedures. Pump approximately 500 ml through the system and begin filling the applicable sample bottles. Remove the filter prior to filling sample bottles for the other analyses, which do not require filtration. Record all sample information on the field log.

7) Collect remaining samples for analyses according to the event-specific SAP. Use a new piece of tygon tubing and change out the flexible silicone tubing in the peristaltic pump at each location.

8) Follow the Field Procedures Manual and O&M Manual for sample handling and management, equipment decontamination, and investigation-derived waste (IDW) management.

9) Decontaminate the sampling apparatus after each sample is collected. The decontamination will be a triple rinse with 5-gallon buckets containing soapy water, potable water, and deionized (DI) water, respectively. First, the apparatus will be placed in the soapy water and the outside scrubbed. Then pump approximately 3 sampler volumes through the apparatus using the peristaltic pump and dedicated tubing used. Re-circulate the water back into the 5-gallon bucket. Repeat the rinse with the potable and deionized water.

10) Collect an equipment rinse blank after the first decontamination of the day. Collect the sample by attaching the decontaminated sampling apparatus to a length of clean peristaltic tubing. Run deionized water through the sampler and collect a sample to be shipped to the analytic laboratory for hexavalent chromium analysis.

Project Name Pore Water and Seepage Study **Sampling Event** _____

Job Number _____ **Date** _____

Field Team _____ Page ____ of ____

Field Conditions _____

Sample ID _____ Sample Time _____ GPS Coordinates (measured): _____

Depth to Sample Below River Bottom: _____ Time: _____ Measure Point: _____

QC Sample No. and Type _____ QC Sample Time _____

Water Quality Meter Serial Number: Sampling Method:

Sample Location	Time		pH	Conductivity uS/cm	Turbidity NTU	Diss. Oxygen mg/L	Temp. °C	Salinity %	TDS g/L	Eh / ORP mv	Comments (See descriptors below)

Observations: (i.e. low water level, sand bank present, etc..) _____

Remarks _____

Color: clear, grey, yellow, brown, black, cloudy, green **Odor**: none, sulphur, organic, other **Solids**: Trace, Small Qu, Med Qu, Large Qu, Particulate, Silt, Sand

Sample ID _____ Sample Time _____ GPS Coordinates (measured): _____

Depth to Sample Below River Bottom: _____ Time: _____ Measure Point: _____

QC Sample No. and Type _____ QC Sample Time _____

Water Quality Meter Serial Number: Sampling Method:

Sample Location	Time		pH	Conductivity uS/cm	Turbidity NTU	Diss. Oxygen mg/L	Temp. °C	Salinity %	TDS g/L	Eh / ORP mv	Comments (See descriptors below)

Observations: (i.e. low water level, sand bank present, etc..) _____

Remarks _____

Color: clear, grey, yellow, brown, black, cloudy, green **Odor**: none, sulphur, organic, other **Solids**: Trace, Small Qu, Med Qu, Large Qu, Particulate, Silt, Sand

Sample ID _____ Sample Time _____ GPS Coordinates (measured): _____

Depth to Sample Below River Bottom: _____ Time: _____ Measure Point: _____

QC Sample No. and Type _____ QC Sample Time _____

Water Quality Meter Serial Number: Sampling Method:

Sample Location	Time		pH	Conductivity uS/cm	Turbidity NTU	Diss. Oxygen mg/L	Temp. °C	Salinity %	TDS g/L	Eh / ORP mv	Comments (See descriptors below)

Observations: (i.e. low water level, sand bank present, etc..) _____

Remarks _____

Color: clear, grey, yellow, brown, black, cloudy, green **Odor**: none, sulphur, organic, other **Solids**: Trace, Small Qu, Med Qu, Large Qu, Particulate, Silt, Sand

SOP-A16

Access Routes
Standard Operating Procedures for PG&E Topock Program

This standard operating procedure (SOP) addresses the procedures to be used when accessing wells or other sampling stations at the Topock site. This SOP should be used for all travel to collect data on site. All field personnel and subcontractors are required to read this SOP and sign on the Employee Signoff Form. Although no groundwater sampling is currently planned to be conducted at any SWFL habitat wells during SWFL nesting season, the procedures below will be used if such sampling does become necessary.

OVERVIEW:

Figure 1 at the end of this SOP shows the Topock project groundwater and surface water data collection locations. The map also shows the access routes used for sampling and transducer downloads. These lines indicate vehicle access on existing roads, and indicate where utility vehicle (UTV) or foot access is used at locations where pickup truck access is not allowed. Purple lines on the map indicate where either pickup trucks or UTVs are used. Blue lines indicate routes with allowed access by UTV but not by pickup truck. Black dotted lines indicate foot access routes. Where the black dots overlay the blue routes on the floodplain area, the access is on foot or by electric UTV during the southwestern willow flycatcher (SWFL) nesting season (May 1st through September 30th), and by any UTV outside of nesting season. The access routes with specific mitigation measures or access procedures discussed herein are highlighted in green.

There are 3 access procedures that are to be followed depending on when/where fieldwork is to occur:

A = Universal for the site

B = SWFL habitat during SWFL summer nesting season (May 1st through September 30th)

C = Upland close to cultural resources (Year-round)

A site sensitivity orientation is to be provided to all field personnel regarding cultural and biological resources and the spiritual importance of the geographic area and the river to local tribes. The orientation will emphasize that cultural resources are a concern in all areas of the project, and the need to stay within the established, marked access routes as well as work areas, and to prevent enlargement of previously used areas.

A SITES ACCESS PROCEDURES – APPLIES TO ALL SITES:

Personnel must obey the following procedures when accessing all data collection sites (refer to Figure 1):

- Access by vehicles is restricted to established roads or tracks. For off-road access the number of vehicles used should be minimized.
- All vehicles are to observe a 10-mph speed limit on Historic Route 66 (H-66), drive in the center of H-66 to avoid wear on the H-66 shoulders, and not cut corners when exiting H-66 to access well locations.
- All vehicles are to travel slowly off-road (5 mph speed where possible) to give time to observe and avoid wildlife and minimize noise, dust, and vehicle rutting.
- Most off-road access is to be by low-impact utility vehicles (UTV's) which carry sampling or data collection equipment as well as purge water tanks.
- Access beyond the purple lines on the map is by UTV (blue lines). Dotted black lines indicate access by foot or electric UTV. Access follows consistent routes or paths.
- Minimize time near possible wildlife habitat.
- Coordinate with on-site field client representative (FCR) to prevent unauthorized access to site areas.

These minimum procedures are followed for all data collection locations. More rigorous procedures are to be used at locations where potential concerns have been identified.

B SITES ACCESS PROCEDURES:

Field crews are to follow the following mitigation measures for the floodplain wells listed below during the SWFL nesting season, May 1st through September 30th. The universal A sites measures that were outlined above will also apply at these locations. Site B locations include:

- Well clusters MW-27, MW-34, and shoreline location R-27 on the Bureau of Land Management (BLM) managed area
- Well clusters MW-22, MW-43, MW-52, MW-53, and shoreline location R-22 on the Havasu National Wildlife Refuge (HNWR) area

Well sampling, transducer data collection, and any other work activities will not occur during the biennial protocol survey for SWFL's. Upon completion of the surveys, the onsite biologist will approve/disapprove of work activities depending on the survey results. If a SWFL is not detected, then the biologist will permit the activities. If a SWFL is detected, then the biologist will not permit the work activities, and the regulatory agencies will be consulted.

Specialized Field Equipment:

An electric UTV will be utilized while accessing B sites on BLM and HNWR property during the nesting season. The electric UTV will minimize noise and enable the sampling crew to minimize the number of trips needed to transport equipment to a well cluster in SWFL habitat.

Power supply outlets have been installed at PE-1 and a leak detection vault north of MW-39. By using this power supply to power the groundwater pumps instead of a generator, the sampling operation is virtually noiseless when sampling the MW-34 monitor well cluster.

New ½" I.D. LDPE tubing will be used to connect the pumps at the well head to the purge tanks at the staging areas. Spill containment will be placed under any hose connections where multiple hose segments are required to reach more distant wells. The hose will be cleared of all water after sampling is completed. Clearing water from the hose will be accomplished by lifting the hose to shoulder height to drain the water into the purge water storage tank.

New dedicated pumps were installed in late 2005 in MW-27, MW-34, and MW-43 well clusters. Therefore, pumps and decontamination equipment will no longer need to be transported to these wells, decreasing the overall impact associated with sampling at these locations.

Access Procedures for Wells on BLM Property:

Well clusters MW-27, MW-30, MW-34, MW-36, MW-39, MW-42 and MW-45 will be accessed directly by UTV's from the south access, under the railroad tracks. For sampling the MW-34 cluster, an electric UTV will be used to carry equipment and access the wells, and a second UTV with the purge tank will park in the staging area at the PE-1 location. New or dedicated ½" ID LDPE tubing and a power cord will be stretched from the well heads to the purge tank and power source at PE-1. For sampling the MW-27 cluster and R-27 when necessary, the electric UTV will be used to carry equipment and access the wells, and a second UTV with the purge tank will park in the staging area just north of the railroad bridge between MW-42 and MW-27. New or dedicated ½" ID LDPE tubing and a power cord will be stretched from the well heads to the purge tank and generator at the staging area.

Access Procedures for Wells on HNWR Property:

Monitor well clusters MW-22, MW-43, MW-52, and MW-53 and shoreline station R-22 are located on HNWR property, south of the railroad bridge. UTV mounted equipment is to be staged at the cleared and graded area to the west of well cluster MW-32 (Figure 1). All power generation equipment and purge water storage tanks are staged at this location. The electric UTV will be used to carry equipment and access the wells, and a second UTV with the large purge tank will park in the staging area described above. New or dedicated ½" ID LDPE tubing and a power cord will be stretched from the well heads to the purge tank and power source at the staging area. For MW-22 and the MW-52 and MW-53 clusters, a peristaltic pump and battery are used for purging directly to a small tank on the electric UTV.

Sampling Procedures for B Site Wells:

The following list summarizes the modified "nesting season" sampling procedures for the B site monitoring wells with dedicated pumps. These modified procedures will be followed each year during May 1st through September 30th:

- A biologist or authorized individual will pre-survey the planned work area for the presence of nesting listed-bird species, and sampling will proceed if the survey results are negative. BLM and DTSC will be contacted and sampling will not proceed if the pre-survey finds nesting listed-bird species.
- New sampling procedures and biological resource sensitivity will be reviewed at each field event kickoff briefing.
- The UTVs will maintain low speeds and low revolutions per minute to minimize noise. The target speed will be 5 mph on the floodplain, per BLM direction. The UTVs will maintain a reduced speed to the extent possible while avoiding getting lodged or stuck.
- A biologist will accompany the sampling team upon startup of activities and will provide a reconnaissance "sweep" during the sampling event.
- A generator will be operated at the staging areas only when there is no nearby power supply (HNWR).
- Water level measurements are to be taken at the beginning and end of the purge only. No measurements will be taken during the purge.
- Spill prevention, containment, and control measures outlined in SOP-A13 will be implemented.
- At all times, conversation noise and abrupt or unnecessary movements will be avoided, and equipment noise will be minimized. Equipment will be muffled or padded during transport and setup to avoid clanging or other impact noises from bottles and metal components.
- A biologist's report of the sampling activities will be completed within a week of the sampling and submitted to DTSC and BLM.

C SITES ACCESS PROCEDURES:

Field crews are to implement the following mitigation measures for the upland wells listed below to prevent impact from data collection on cultural or biological resources.

- East Mesa wells (IW-2, IW-3, OW-1, OW-2, and OW-5 well clusters)
- West Mesa wells (OW-3 well cluster)
- Compliance wells (CW-1, CW-2, CW-3, and CW-4 well clusters).
- Monitoring wells MW-14, MW-15, MW-16, MW-18, and MW-25.

The goal of these additional precautions is to prevent any excursion onto areas that were not previously disturbed and minimize the impact of field work. Unlike the B sites access procedures that were developed for use on the floodplain only during the summer SWFL nesting season, the precautions for these upland area C sites will be applied on a year-round

basis. The universal A sites measures that were outlined above will also apply at these locations year round.

- Personnel and vehicles are required to stay within the areas that were previously disturbed. The work areas are delineated where possible using straw "wattles", these barriers are not to be crossed with any vehicle.
- For the less frequent quarterly or semiannual access to wells MW-15, MW-16, MW-18, and MW-25, crews must stay on the clearly defined gravel access roads to each well.
- Use lathe stakes to mark boundaries during construction and well installation, rather than orange plastic fencing. These boundary stakes will be maintained, and if needed a similar marker for both access routes and work area boundaries may be substituted in the future. Any replacement should have limited visual impacts, such as straw wattles to prevent travel off existing designated work areas. Specific areas where these boundary markings are maintained include:
  - Access route on and off H-66 and edges of the East Mesa.
  - Access route from H-66 and a turnaround/work area near OW-3 on the West Mesa.
  - Access route from H-66 and a turnaround/work area near CW-4 in the unnamed wash.
  - Access routes past CW-2 and turnaround area at CW-3.
  - Defined access turn-off from H-66 to CW-1 and MW-14.
- Drive one-way on the CW-2 and CW-3 access track and turn vehicles only at the established turnaround at CW-3.
- Drive in only the active channel area of the wash when accessing CW-4. Follow the previous access path, marked where possible with straw wattles.
- Stay on established roads to access MW-15 and MW-16.

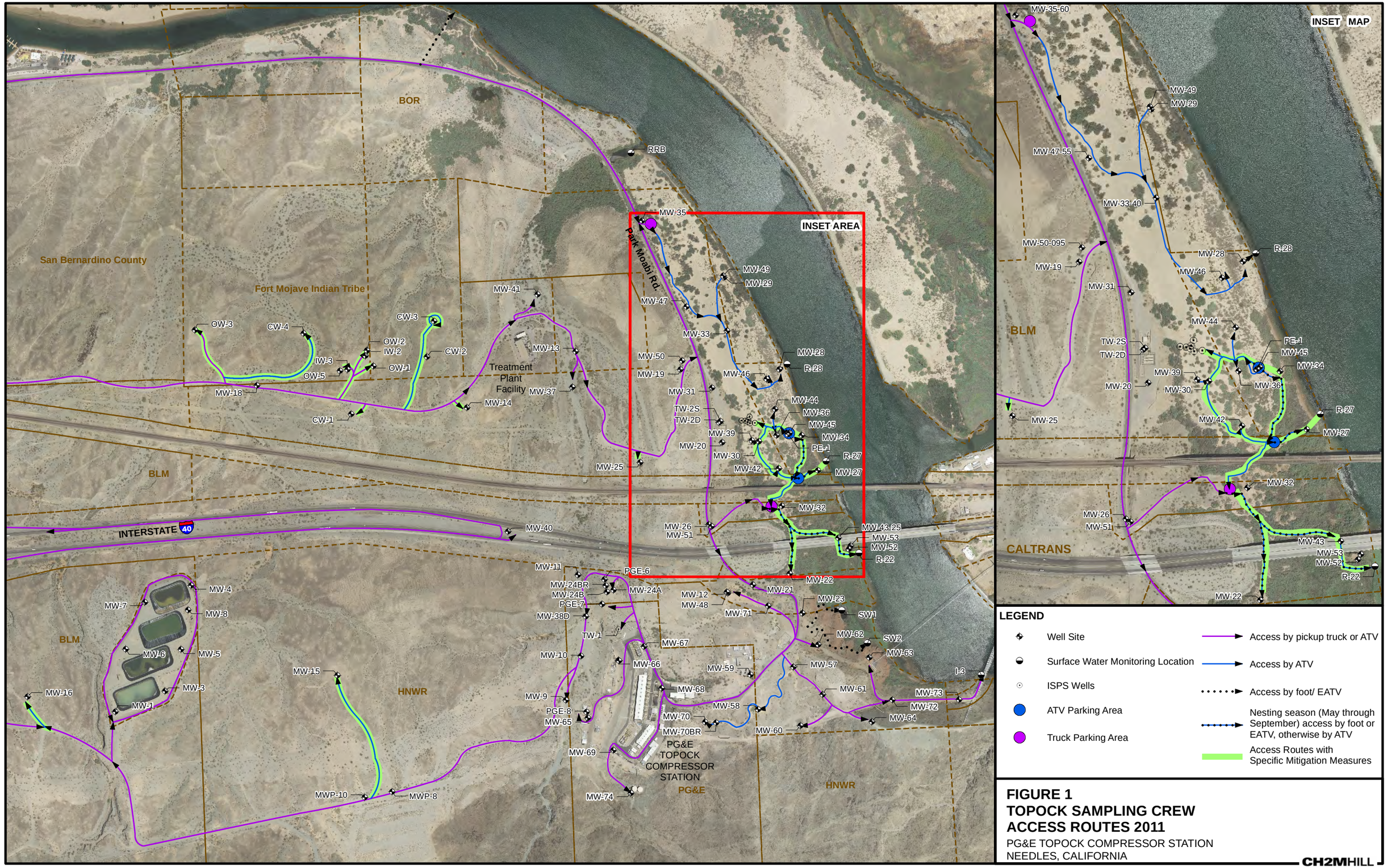

LEGEND

- Well Site
- Surface Water Monitoring Location
- ISPS Wells
- ATV Parking Area
- Truck Parking Area
- Access by pickup truck or ATV
- Access by ATV
- Access by foot/ EATV
- Nesting season (May through September) access by foot or EATV, otherwise by ATV
- Access Routes with Specific Mitigation Measures

FIGURE 1
TOPOCK SAMPLING CREW ACCESS ROUTES 2011

PG&E TOPOCK COMPRESSOR STATION
NEEDLES, CALIFORNIA

CH2MHILL

Path: D:\Projects\Topock\MapFiles\2012\AccessRoutes.mxd Date Saved: 4/25/2012 10:47:40 AM

SOP-A17

Groundwater and Surface Water Mobile Integrated Sample Tracking Standard Operating Procedures for PG&E Topock Program

This standard operating procedure (SOP) addresses the procedures and tools to be used for collecting and managing field data as well as managing analytical samples collected in the field associated with the Topock Monitoring Programs. This SOP is a guideline to be used during the collection of surface water and groundwater data. This includes the Groundwater Monitoring Program (GMP), Compliance Monitoring Program (CMP), and River Monitoring Program (RMP) samples.

REQUIRED DOCUMENTS

1) Event-specific sampling and analysis plan (SAP).
2) Applicable project work plan or monitoring plan. Refer to the Topock Program Sampling, Analysis, and Field Procedures Manual, and Operation and Maintenance (O&M) Manual, as required.
3) Mobile Integrated Sample Tracking (MIST) Operators Manual
4) PG&E Programs Data Management Plan
5) Topock Quality Assurance Program Plan (QAPP)

FIELD DATABASE PREPARATION & SETUP

This section describes the upfront planning a preparation steps necessary to properly set-up a groundwater or surface water sampling event using the Topock Field Database. This SOP provides the how-to information for properly entering information into the field database.

1) Ensure that you have the latest version of the Topock field database. This actually consists of two database files. The "Front end" that is the interface for information entry and management and the "backend" that stores the field data and sampling information.
2) Set up the "Project Name" in the field database using the established Topock Event nomenclature, year-program-event number. For example, if you are preparing the field database for the 144th GMP sampling event, which will occur in 2008, the event title will be 2008-GMP-144.
3) Sample IDs will be entered into the database using the following convention: well ID--event number. For example, well MW-34-100 sampled during event 2008-GMP-144 would be named MW-34-100-144.
4) Analyses will be entered into the field database in accordance with the most recent SAP and any modifying documents or correspondences. Modifying documents may include the most recent Contract Work Assignment, correspondences from the regulatory agencies and client, and additional direction from project managers.

QUALITY CONTROL PROCEDURES PRIOR TO SAMPLING EVENT

The following steps describe the QC procedures prior to the initiation of sampling activities necessary to ensure all the required samples are collected.

1) Prepare a planned sample table (PST) from the database including all locations and analyses for the sampling event to be performed. An example of the PST is included as an attachment to this SOP.

2) The PST is to be reviewed by the project manager (PM) responsible for the upcoming event and the designated QC manager. If the PM and the QC manager concur with the PST, both will sign the form indicating that the samples listed are complete in accordance with all guidance documents.

3) When the PST is reviewed and accepted, prepare the event paperwork from the field database. This includes sample labels, purge forms and blank chains of custody. In addition, a list of bottles can be generated to be used to order sample bottles from the analytical laboratories. Compare the forms against the approved PST for completeness and accuracy.

USING THE MIST HANDHELD UNIT AND FIELD DATABASE

The Topock monitoring program uses the CH2M HILL proprietary Mobile Integrated Sample Tracking (MIST) system for field data acquisition and analytical sample tracking. This SOP provides an outline of steps for using the system. Details for using the MIST system are provided in the MIST operator's manual.

1. Load the appropriate field database onto the computer that is to be used for sample tracking during the field sampling event. Follow the steps in the users manual to properly prepare the database for upload into the handheld unit (Recon).

2. Load the data for the upcoming sampling event(s) onto the MIST handheld computer. Boot the system and check to ensure that the complete sampling set is included.

3. Upon arrival at a monitoring well or other sample location select the correct sample location ID manually or scan the radio frequency identification (RFID) tag if the location is so equipped. The RFID tag is a black disc approximately the size of a quarter that is attached to the well casing. Upon scanning the RFID tag, the well ID and construction information will appear on the Recon screen. **Confirm that you are at the location you intend to sample. If the well cannot be properly identified via RFID tag and or clear marking, the location is to be identified by measuring the total depth of the well.** Wells sampled on a monthly sampling frequency are indicated by a colored band around the top of the well casing.

4. Purge and sample the location in accordance with the appropriate sampling SOP (see SOPs A-1 through A-4 for sampling procedures). Record the well and purge information in the MIST unit as directed by the MIST Operator's Manual. In addition, record all field data on a hardcopy purge form. The hardcopy forms will serve as backup in case the data on the handheld unit is lost.

5. When the necessary purge volume has been purged, use the MIST unit to confirm that the field parameters are stable in accordance with site SOPs. If the parameters are not stable, continue purge. If stabilization is achieved, collect the analytical samples.

6. The MIST handheld unit will provide a table of samples to be collected at the location. The table will also indicated required preservation and filtration. Confirm that the appropriate bottle, preservative and filtration is used for each analyte. Confirm the collection of the bottle for each analyte by entering the sample time and date. Doing so indicates that the sample has been collected and it will be recorded as such in the database.

7. After the completion of each sample location, run the "Sprite Backup" tool on the Recon unit to ensure that no data is lost in the event of power loss or other unforeseen mishap. Backup the Recon before changing battery units as well.

8. At the end of sampling each day, the data in the handheld unit is to be uploaded to the field database as directed by the MIST Operator's Manual. Once the upload is completed, run the automated COC forms from the field database.

POST SAMPLING QUALITY CONTROL

This section describes the quality control steps required at the end of each sampling day. In addition, proper sample packing and shipment are discussed.

1. After the field data has been collected and uploaded into the field database as described above, COCs forms are to be generated from the field database. Compare the COC forms to the sample bottles collected to confirm all samples are properly recorded in the COC forms.

2. Compare the COC forms to the PST to confirm that all samples were collected. Certain quality control samples may be required to be held by the lab and not analyzed unless there is a data discrepancy. Confirm that these samples are labeled "Hold" in the comments column of the COC form. If there are any deviations from the PST that are intentional record the reasons for the change on the appropriate purge form and daily log. **If there are any sampling inconsistencies that cannot be explained, the location that needs additional or other samples will need to be re-sampled. The Sampling coordinator, Project Chemist and Project Manager should be notified as soon as possible, at a minimum on each day of the sampling event, of any inconsistencies that are identified.**

3. The field database has an additional tool to compare planned samples versus samples that were actually collected. Run the Planned vs. Actual (PvA) at the end of each day to confirm that all samples were collected as planned. If there are any deviations from the PST that are intentional record the reasons for the change on the appropriate purge form and daily log. **If there are any sampling inconsistencies that cannot be explained, the location that needs additional or other samples will need to be re-sampled. The Sampling coordinator, Project Chemist and Project Manager should be notified as soon as possible, at a minimum on each day of the sampling event, of any inconsistencies that are identified.**

4. At the end of each day, forward the purge forms and COCs to the sampling task lead via email or fax. The sampling task lead is responsible for additional review of the purge and sampling information for the following:

    - Appropriate purge and sampling techniques were used.
    - The purge was complete.
    - The purge parameters are in-line with historic purge data.
    - The correct samples were collected from each location.

If there are discrepancies in the purge or sample the location may need to be re-sampled.

SOP-A18

Purging and Sampling of Groundwater Monitoring Wells
Minimal Drawdown Method
Standard Operating Procedures for PG&E Topock Program

This standard operating procedure (SOP) addresses the procedures and equipment to be used for purging and sampling all groundwater monitoring wells approved for the minimal drawdown sampling approach. This SOP will be used for sampling groundwater monitoring wells using an adjustable rate, positive displacement pump.

REQUIRED DOCUMENTS:

- Event-specific planned sample table (PST).
- Applicable project work plan or monitoring plan. Refer to the Topock Program Sampling, Analysis, and Field Procedures Manual (Procedures Manual).
- Construction/Remedial Action Work Plan (C/RAWP) during the construction phase.
- Operation and Maintenance (O&M) Manual, and Quality Assurance Project Plan (QAPP) (Appendix B of the O&M Manual Volume 2, Sampling and Monitoring Plan) as required during the O&M phase.
- Topock Program Health and Safety Plan (HSP)
- Applicable SOPs may include:
  - SOP-A1, *Purging and Sampling of Groundwater Monitoring Wells, Well-Volume Method*
  - SOP-A2, *Purging and Sampling of 1-inch Diameter Groundwater Monitoring Wells, Modified Well-Volume Method*
  - SOP-A3, *Purging and Sampling of Active and Inactive Water Supply Wells*
  - SOP-A4, *Depth-Specific River Water Sampling*
  - SOP-A5, *Groundwater Sampling from Sonic Drilling Boreholes*
  - SOP-A6, *Field Filtration*
  - SOP-A7, *Water Level Measurements*
  - SOP-A8, *Field Water Quality Measurements Using a Flow-through Cell*
  - SOP-A9, *Calibration of Field Instruments*
  - SOP-A10, *Decontamination of Water Sampling Equipment*
  - SOP-A11, *Total Depth Measurements*
  - SOP-A12, *Field Water Quality Measurements for Grab Samples*
  - SOP-A13, *Spill Prevention, Containment, and Control Measures for Monitoring Well Sampling*
  - SOP-A14, *Pore Water Sampling*

  - SOP-A16, *Access Routes*
  - SOP-A19, *Sampling of Groundwater Monitoring Wells, Hydrasleeve No Purge Method*
  - SOP-A23, *Sample Handling and Custody*
  - SOP-C1, *Solinst Pressure Transducers*
- Well construction logs/specifications
- Mobile Integrated Sample Tracking (MIST) handheld database
- Previous sampling logs or tabular historic field data tables
- Current site access map
- Blank sampling logs, maps, sample labels, chains of custody (COC's), and the designated groundwater sampling field notebook

REQUIRED EQUIPMENT:

- 2 or more (i.e. one is backup) WQ instruments with flow through cells, or equivalent.
- Hach 2100P turbidimeter or equivalent.
- 200 foot (or longer as needed) water level indicator (WLI).
- Trimble Rugged Reader hand held instrument for MIST data collection.
- Two, 200 gallon capacity purge tanks.
- Utility vehicles (UTVs) as necessary.
- Honda 2000 watt generator or alternate power source.
- Adjustable-rate, positive-displacement pump
- Sample containers, cooler and ice

PREPARATION & SETUP:

- Review event-specific PST or event-specific field instructions, previous sampling logs, Procedures Manual, O&M Manual, HSP, and groundwater sampling supplies and equipment check list. (NOTE: the PST should also be reviewed for required "non-analytical event activities" such as water level measurements or other data collection that is planned in association with the groundwater sampling event).
- Acquire the existing field logbook for groundwater sampling and initiate entries.
- Inspect all equipment and verify that the field water quality (WQ) meters have been calibrated prior to use according to the manufacturer's instructions and SOP-A9, *Calibration of Field Instruments*.
- Inventory sample bottles, build sample sets for the required analytes at each sample location, ensure a sufficient supply of lab de-ionized water for equipment blanks, and confirm the lab courier schedule.

- Field-check sampling equipment and supplies: water level indicator (WLI), WQ meters, flow-through cell, pump controller, power supply, pump discharge/sampling tubing, N-dex gloves, deionized water sprayers, 5 gallon buckets, paper towels, 0.45 micron in-line filters, etc.

FIELD PROCEDURES:

- **Prior to opening any monitor well, remove all pens, lighters, calculators, or any other loose items from vest pockets, or from any other location where they could fall into the well.**
- Upon arrival at the monitoring well, at least 2 members of the sampling team must confirm the well ID. Wells should be clearly marked on the well monument. If the well cannot be positively identified by the marking, measure total depth of the well and compare to the well installation details to confirm the correct location. Report worn or unclear well markings to the on-site field coordinator.
- Place spill containment according to SOP-A13 *Spill Prevention, Containment, and Control Measures for Monitoring Well Development, Purging, and Sampling.*
- If using a transient pump, collect an "EB", equipment blank, ***prior to pump installation*** if necessary according to the PST.
- Open the protective casing lid and, ***prior to moving it***, note the exact configuration of the transducer installation if present. Measure static WL according to SOP-A7, *Water level Measurements,* moving the transducer if necessary, and record WL value in MIST and on the sampling log.
- If the well is equipped with a transducer and does not have a dedicated pump installed, remove the transducer from the well according to SOP-C1, *Solinst Pressure Transducers*.
- If the well does not have a dedicated pump installed, but does have dedicated sample tubing, attach the dedicated tubing to the appropriate pump and install decontaminated pump at the same intake/sampling depth as used in prior events. There is a marking on the purge tubing which corresponds with the monitor well top of casing (TOC) to facilitate this requirement. Purge and sample the well as described below.
- If the well does not have a dedicated pump ***or*** tubing, or has not been previously sampled, use new low-density polyethylene tubing and install the pump with the intake at approximately the midpoint of the well screen. Purge and sample the well as described below.
- If the well ***does*** have a dedicated pumping system, connect the discharge tubing and purge and sample the well as described below.
- Collect daily equipment blanks and duplicate samples as required by the PST and instructed by the field team leader.

PURGING AND SAMPLING PROCEDURES:

- Install the pump in the well. Slowly lower the pump (with the attached tubing and safety line) into the well to the desired depth. The pump will be set near the middle of the well

screen, if possible. At a minimum, the pump intake will not be positioned lower than 2 feet from the bottom of the well. The depth to the pump intake will be recorded on the Groundwater Sampling Form. If there is less than 3 feet of available water, the groundwater well will be purged and sampled using a bottom-loading bailer.

- Measure the water level in the well after pump insertion. Leave the water level probe in the well to facilitate continued water level monitoring during purging activities.
- Start purging the well at a low flow rate between 0.2 and 0.5 liters per minute. Measure the purge rate using a container of known volume, and record this information on the Groundwater Sampling Form
- The water level should be monitored during purging, and ideally, the purge rate should equal the well recharge rate so there is limited drawdown in the well. (The water level should stabilize for the specific purge rate). The purge rate may be increased above 0.2 and 0.5 liters per minute as long as a constant water level in the well can be maintained, and the target drawdown of no more than 1 foot is being met. There should be at least 1 foot of water over the pump intake. This assures that there is no risk of the pump suction being broken, or of entrainment of air in the sample. Record adjustments in the purge rate and changes in depth to water on the field data sheet. If the target drawdown is not met, purge rates should be decreased to the minimum capabilities of the pump (0.1 to 0.2 liters per minute). If using a pulse style pump, measure the water level at the end of the pressure cycle when the water level has recovered as much as it will, before again filling the pump during the fill cycle. This method will generate consistent drawdown data.
- During purging, the water quality parameters will be measured periodically (every 3 to 5 minutes) until the parameters have stabilized as shown below. If parameter stabilization has not occurred after 4 hours, purging activities will be considered complete.

- pH	+/- 0.1 pH units
- Specific conductance	+/- 3%
- ORP	+/- 10 millivolts
- Turbidity	10% NTU units or less unless other parameters have stabilized during an extended purge and turbidity is trending flat if still over 10 NTU units. The target turbidity goal (but not a hard criterion) is 5 to 10 NTUs.
- Dissolved oxygen	+/- 0.3 mg/L
- Temperature	+/- 2° Celsius

- When the requirements above have been satisfied and the purge cycle is complete, disconnect the flow through cell and prepare to collect samples directly from the pump discharge tubing for analyses according to event-specific PST. Prepare sample containers and collect gas-sensitive analytes first. The preferred collection order will be volatile organic compounds (VOCs), semi-volatile organic compound (SVOCs), metals (including

hexavalent chromium [Cr(VI)] and total chromium [Cr(T)]; see SOP-A6), then general chemistry (cations, anions, stable isotopes).

- For filtered samples, attach a 0.45 micron in-line filter to the pump discharge and allow approximately 500 mL of sample to pass through the filter before beginning sample collection in accordance with SOP-A6 *Field filtration* and the QAPP.
- When sample collection is complete, record sample information, final WL, and purge volume data in MIST and on the field sampling log.
- If transient pump previously installed, remove the pump from the well, detach the dedicated tubing and carefully drain any residual water to the purge water tank. Fold both ends of the purge tubing and secure with wire ties as a further deterrent to leakage. Store the dedicated tubing in a sealed, labeled trash bag. Decontaminate the pump according to SOP-A10, *Decontamination of Water Sampling Equipment.*
- If well was equipped with a transducer, replace the transducer in exactly the same configuration in which it was found and in accordance with SOP-C1, *Solinst Pressure Transducers*.
- Close and secure well protection lid.
- Follow applicable SOPs, the Procedures Manual, and O&M Manual for sample handing and management, equipment decontamination, and investigation-derived waste (IDW) management (O&M Manual Volume 1, Section 6 during O&M or Appendix R of the C/RAWP during construction).

SOP-A19

Sampling of Groundwater Monitoring Wells
HydraSleeve No Purge Method
Standard Operating Procedures for PG&E Topock Program

This standard operating procedure (SOP) addresses the procedures and equipment to be used for sampling all groundwater monitoring wells approved for the HydraSleeve sampling approach.

REQUIRED DOCUMENTS:

- Event-specific planned sample table (PST).
- Applicable project work plan or monitoring plan. Refer to the Topock Program Sampling, Analysis, and Field Procedures Manual (Procedures Manual).
- Construction/Remedial Action Work Plan (C/RAWP) during the construction phase.
- Operation and Maintenance (O&M) Manual, and QAPP (Appendix B of the O&M Manual Volume 2, Sampling and Monitoring Plan) as required during the O&M phase.
- Topock Program Health and Safety Plan (HSP)
- Applicable SOPs:
  - SOP-A1, *Purging and Sampling of Groundwater Monitoring Wells, Well-Volume Method*
  - SOP-A2, *Purging and Sampling of 1-inch Diameter Groundwater Monitoring Wells, Modified Well-Volume Method*
  - SOP-A3, *Purging and Sampling of Active and Inactive Water Supply Wells*
  - SOP-A4, *Depth-Specific River Water Sampling*
  - SOP-A5, *Groundwater Sampling from Sonic Drilling Boreholes*
  - SOP-A6, *Field Filtration*
  - SOP-A7, *Water Level Measurements*
  - SOP-A8, *Field Water Quality Measurements Using a Flow-through Cell*
  - SOP-A9, *Calibration of Field Instruments*
  - SOP-A10, *Decontamination of Water Sampling Equipment*
  - SOP-A11, *Total Depth Measurements*
  - SOP-A12, *Field Water Quality Measurements for Grab Samples*
  - SOP-A13, *Spill Prevention, Containment, and Control Measures for Monitoring Well Sampling*
  - SOP-A14, *Pore Water Sampling*
  - SOP-A16, *Access Routes*

  - SOP-A18, *Purging and Sampling of Groundwater Monitoring Wells, Minimal Drawdown Method*
  - SOP-A23, *Sample Handling and Custody*
  - SOP-C1, *Solinst Pressure Transducers*
- Well construction logs/specifications
- Mobile Integrated Sample Tracking (MIST) handheld database
- Previous sampling logs or tabular historic field data tables
- Current site access map
- Blank sampling logs, maps, sample labels, chains of custody (COCs), and the designated groundwater sampling field notebook

REQUIRED EQUIPMENT:

- 2 or more (i.e. one is backup) YSI-556 WQ instruments, or equivalent.
- Hach 2100P turbidimeter or equivalent.
- 200 foot (or longer as needed) water level indicator (WLI).
- Trimble Rugged Reader hand held instrument for MIST data collection.
- HydraSleeve samplers (from supplier)
- Pointed plastic discharge tube (included with sampler)
- Polypropylene strapping (from supplier)
- Stainless steel weights
- Small cable ties
- String reel
- Utility knife
- Scissors (stainless steel)
- Well caps with small eyelet on bottom allowing a string to be tied off
- Sample containers, cooler and ice

PREPARATION & SETUP:

- Review event-specific PST or event-specific field instructions, previous sampling logs, Procedures Manual, HSP, and groundwater sampling supplies and equipment check list. (NOTE: the PST should also be reviewed for required "non-analytical event activities" such as water level measurements or other data collection that is planned in association with the groundwater sampling event).
- Acquire the existing field logbook for groundwater sampling and initiate entries.

- Inspect all equipment and verify that the field water quality (WQ) meters have been calibrated prior to use according to the manufacturer's instructions and SOP-A9, *Calibration of Field Instruments*.
- Inventory sample bottles, build sample sets for the required analytes at each sample location, ensure a sufficient supply of lab de-ionized water for equipment blanks, and confirm the lab courier schedule.
- Field-check sampling equipment and supplies: water level indicator (WLI), WQ meters, HydraSleeve supplies, N-dex gloves, D.I water sprayers, 5 gallon buckets, paper towels, 0.45 micron in-line filters, etc.
- Evaluate the required sample volume and well construction to select the appropriate size (2-inch or 4-inch diameter) and number of Hydrasleeve samplers for each well.

FIELD PROCEDURES:

- **Prior to opening any monitor well, remove all pens, lighters, calculators, or any other loose items from vest pockets, or from any other location where they could fall into the well.**
- Upon arrival at the monitoring well, at least 2 members of the sampling team must confirm the well ID. Wells should be clearly marked on the well monument. If the well cannot be positively identified by the marking, measure total depth of the well and compare to the well installation details to confirm the correct location. Report worn or unclear well markings to the on-site field coordinator.
- Place spill containment according to SOP-A13 *Spill Prevention, Containment, and Control Measures for Monitoring Well Development, Purging, and Sampling.*
- Open the protective casing lid and, ***prior to moving it***, note the exact configuration of the transducer installation if present. Measure static WL according to SOP-A7, *Water level Measurements,* moving the transducer if necessary, and record WL value in MIST and on the sampling log.
- If the well is equipped with a transducer and does not have a dedicated pump installed, remove the transducer from the well according to SOP-C1, *Solinst Pressure Transducers*.

PURGING AND SAMPLING PROCEDURES:

HydraSleeve Deployment

1. Remove HydraSleeve sampler from package and pinch the top to create an opening. See Attachment 1 for a representation of an unfilled HydraSleeve sampler.
2. Use a HydraSleeve Spring Clip to fasten the pre-looped string to the top of the HydraSleeve sampler. Fold the two holes at the bottom of the HydraSleeve together and attach a weight using a HydraSleeve Stainless Steel weight clip. Attach the weight clip to the pre-measured string.
3. If using two HydraSleeve samplers, follow steps 1 and 2 above for placing the second sampler below the first on the pre-measured string.

4. Lower the sampler into the well until the pre-marked hanging location is level with the ground surface.
5. Following placement in the well, fasten the end of the string to the locking tab on the well casing, secure with a cable tie and the well lock.
6. Place cap back onto well.
7. Secure monitoring well and area prior to demobilization.

HydraSleeve Sample Recovery

Once a sufficient period of time has elapsed so that re-equilibration of the water within the well with surrounding groundwater conditions has occurred (typically a minimum of 48 hours), the HydraSleeve samplers can be recovered and samples collected for analysis.

For standard HydraSleeve sampler recovery, the following procedures will be performed at each well:

1. Measure the depth to water to the nearest 0.01 foot.
2. Remove all securing cable ties and remove the sampler from the well. The best method is to pull the HydraSleeve sampler upward continuously from its starting point, at a rate of one to two feet per second or faster, until the sampler is full, which is a vertical distance of 36 to 72 inches for a 36-inch long sampler.
3. The condition of the sampler should be recorded in the field sampling sheets, including the presence of any headspace within the sampler.

HydraSleeve Sample Collection

Samples for chemical analysis will be collected from the HydraSleeve samplers immediately following removal from the well. The following sampling procedures will be used at each well:

1. Identification labels for sample bottles will be filled out for each sample.
2. Hang the filled HydraSleeve from the hanger device after removal from the well.
3. Squeeze the full sampler just below its top to expel water resting above the flexible check valve.
4. Push the pointed discharge tube perpendicularly through the outer polyethylene sleeve approximately three to four inches above the bottom of the HydraSleeve.
5. Transfer the sample from both HydraSleeve samplers into a 2.5 liter compositing container. Pinching the sample sleeve just above the discharge tube will control the flow of the sample. The sample sleeve can also be squeezed, forcing fluid up through the discharge tube, similar to squeezing a tube of toothpaste.
    - The preferred collection order will be volatile organic compounds (VOCs), semi-volatile organic compound (SVOCs), metals (including hexavalent chromium [Cr(VI)] and total chromium [Cr(T)]; see SOP-A6), then general chemistry (cations, anions, stable isotopes).

- For filtered samples, transfer the sample out of the compositing container using a peristaltic pump through a 0.45 micron in-line and allow approximately 250 mL of sample to pass through the filter beginning sample collection. The limited volume in the HydraSleeve sampler requires that less sample be run through the filter than is dictated in SOP-A6 *Field filtration* and the QAPP.

6. If sample volume allows, transfer water into a container to obtain field parameter readings with a YSI-556 WQ or equivalent instrument (note in the field forms the results are approximate because a flow-through cell could not be used). Field parameter readings are to be recorded on the groundwater sample form.
7. Excess sampler water will be emptied into the purged waste water tank.
8. Samples will be preserved and managed as detailed in the QAPP. Time of sampling will be recorded in the field logbook, field sample sheets, sample labels, MIST and chains of custody.
9. After the samples have been collected, immediately place the sample bottles in an ice-filled cooler. Before decontamination of field equipment, the well cap will be replaced and locked.
10. If redeployment of a new HydraSleeve sampler is not intended, sampling equipment, except for string, stainless steel weight and rubber stopper, will be discarded as with other PPE trash, and the blank string with weight will be Stored for later use. However, if deployment of a new sampler is required, the new sampler will be reattached to the existing string and stainless steel weight. The sampler can then be deployed in the well for the next sampling event.
11. If well was equipped with a transducer, replace the transducer in exactly the same configuration in which it was found and in accordance with SOP-C1, *Solinst Pressure Transducers*.
12. Prior to leaving the site, field documentation, including the chain-of-custody form, will be completed.
13. Secure monitoring well and area prior to demobilization.
14. Follow applicable SOPs, the Procedures Manual, and O&M Manual for sample handing and management, equipment decontamination, and investigation-derived waste (IDW) management (O&M Manual Volume 1, Section 6 during O&M or Appendix R of the C/RAWP during construction).

Attachment 1
Representation of HydraSleeve Sampler



SOP-A22

Procedures for Calculation of Freshwater Equivalent Heads Standard Operating Procedures for PG&E Topock Program

This Standard Operating Procedure (SOP) provides instructions for adjusting measured groundwater elevations to freshwater equivalent heads.

INTRODUCTION

Salinity is directly related to water density, which in turn affects the height to which water will rise in a well under static conditions. "Groundwater head" represents the energy state of a groundwater system and groundwater flows from a high energy state to a lower one. Groundwater head takes density, fluid pressure, and elevation into account. When water in a system has the same density, the elevations of water in the wells simply represent the groundwater head distribution. Because there is a range of groundwater salinity at the Pacific Gas and Electric Company (PG&E) Topock Compressor Station (the site), accurate measurements of head require adjustment to a standard density, commonly called a "freshwater equivalent head." Water density also has temperature dependence, with density decreasing with increasing temperature. Salinity and temperature adjustments are currently performed for all water levels in the PG&E database (manual water-level measurements and the pressure transducer measurements).

The most commonly used standard density is that of freshwater. Where densities vary, as they do at Topock, the head in each well is recalculated to the value it would be if freshwater were present. In this way, these freshwater equivalent heads can be compared directly with one another, and groundwater gradients can be mapped. The heads have not been "corrected" (an often-used term), but rather have been converted to an equivalent common standard to provide and accurate comparison.

PARAMETERS MEASURED FOR CALCULATION OF DENSITY

The parameters shown in Table 1 are typically measured in the field or laboratory and may be used to determine the density of the water column, as discussed in the following sections.

TABLE 1
Parameters Used for Calculating Density

Parameter	Units	Typical Range	Description
Specific Conductance	µS/cm @ 25°C	**FW:** 0-1,500 µS/cm **BW:** 1,500-15,000 µS/cm **SW:** 15,000 to 150,000 µS/cm **BR:** >150,000 µS/cm	The conductivity normalized to a temperature of 25°C. The term electrical conductivity is often used interchangeably, although this parameter is not corrected to 25°C.
Salinity	%	**FW:** 0-0.1% **BW:** 0.1-1% **SW:** 1-10% **BR:** >10%	A measure of the dissolved salts in water on a mass-per-mass basis.
Total Dissolved Solids	mg/L	**FW:** 0-1,000 mg/L **BW:** 1,000-10,000 mg/L **SW:** 10,000-100,000 mg/L **BR:** >100,000 mg/L	A measure of the mass of dissolved solids in water on a mass-per-volume basis.

Notes:
°C = degrees Celsius
µS/cm = microSiemens per centimeter
mg/L = milligrams per liter
BR = brine
BW = brackish water
FW = freshwater
SW = saltwater

CALCULATION OF DENSITY

The density of well water must be determined before adjusting hydraulic heads to freshwater equivalent heads. However, the density of water is rarely directly measured; rather, either the salinity or specific conductance (SC) of the water is measured in the field, or the SC or total dissolved solids (TDS) are measured in the laboratory, and a density is calculated from these values.

Salinity and TDS measurements share similar properties, and conversion between the two parameters can be performed using the following formula:

$$Salinity(\%) = \frac{TDS}{10{,}051.1} \quad (1)$$

where:

TDS = the total dissolved solids of the water in milligrams per liter (mg/L).

Salinity and TDS are typically laboratory-based measurements. If salinity or TDS are provided as field measurements, these measurements are likely based upon a linear, non-site-specific conversion from an SC measurement.

Specific conductance (electrical conductivity [EC] at 25°C) is the most commonly available measurement. Specific conductance is a measure of a water's ability to conduct electricity and can be used to estimate the density of the water. The following formula is used to convert SC to TDS:

$$TDS\ (mg/L) = SC \cdot K \quad (2)$$

where:

SC = specific conductance of the water in microsiemens per cm (µS/cm).
K = a dimensionless constant typically ranging from 0.55 to 0.8.

The dimensionless constant K is often assumed to be 0.65 for typical groundwater. This value is used for site calculations at the compressor station. Where sufficient laboratory TDS data exist, a unique conversion factor will be calculated for each well.

DATABASE SETUP

Within the Topock database, manual and transducer water-level data are stored in the tables ***tblWaterLevel*** (Figure 1) and ***tblPT*** (Figure 2), respectively. Salinity and temperature data used to adjust the water levels are also stored for each measurement in these tables. The design of both tables is shown below. The information shown is associated with each water-level measurement in the database.

FIGURE 1
tblWaterLevel Table

tblWaterlevel : Table

Field Name	Data Type	Description
LocID	Text	Location ID (e.g., well, boring, station)
SampleDate	Date/Time	Date of measurement
SampleTime	Date/Time	Time of measurement
EventCode	Text	Monitoring event code
SrcCode	Text	Data source (e.g., CH2M HILL, PG&E, Legacy, etc.)
MeasPtElev	Number	Elevation (ft AMSL) from which depth to water was measured (e.g., top of PVC)
DTW	Number	Depth to water (ft)
RawSalinity	Number	Raw salinity measurement (e.g., salinity, field measured specific conductance, lab TDS, etc.)
RawSalinityDate	Date/Time	Date of salinity measurement, if applicable
CalcCode	Text	Code identifying the type of raw salinity and conversion used to convert to salinity
CalcComment	Text	Comment on salinity conversion
Salinity	Number	Final salinity of water column (%)
Temperature	Number	Temperature of water column (°F)
TemperatureComment	Text	Comment on temperature conversion
RawWElev	Number	Unadjusted groundwater elevation (ft AMSL)
CorrectWElev	Number	Final salinity and temperature adjusted groundwater elevation (ft AMSL)
Comments	Text	General comment
dbdate	Date/Time	db upload date

FIGURE 2
tblPT Table

tblPT : Table

Field Name	Data Type	Description
LocID	Text	Location ID (e.g., well, boring, station)
Date	Date/Time	Date of measurement
Time	Date/Time	Time of measurement
ElapsedTime	Number	Elapsed time since transducer test began (minutes)
Temp	Number	Temperature (°C)
PressHead	Number	Raw pressure head (ft)
Offset_ft	Number	Offset or elevation of transducer above datum (ft)
Salinity	Number	Salinity of water columnn (%)
SalCorr	Number	Salinity correction to be applied (ft)
TempCorr	Number	Temperature correction to be applied (ft)
HydHead	Number	Final salinity and temperature adjusted hydraulic head (ft AMSL)
Comment	Text	Comment regarding measurement
DST	Number	True (-1) if PDT; FALSE (0) if standard PST
Exclude	Number	True (-1) if data point to be excluded; FALSE (0) if valid data

In ***tblWaterLevel,*** the field ***CalcCode*** identifies what value is stored in the ***RawSalinity*** field and how the final salinity value is determined. Possible conversion codes and the corresponding conversions to salinity (in percent [%]) include:

FEC2SAL Field-measured EC[1] (microSiemens per centimeter [µS/cm]) converted to salinity (%) [SAL=EC*0.65/10051.1]

LEC2SAL Laboratory-measured EC[1] (µS/cm) converted to salinity (%) [SAL=EC*0.65/10051.1]

FTDS2SAL Field-measured TDS (milligrams per liter [mg/L]) converted to salinity (%) [SAL=TDS/10051.1]

LTDS2SAL Laboratory-measured TDS (mg/L) converted to salinity (%) [SAL=TDS/10051.1]

LSAL Laboratory-measured salinity (%) [no conversion]

FSAL Field-measured salinity (%) [no conversion]

PSAL Salinity (%) measured during previous event [no conversion]

DETERMINATION OF DENSITY AS A FUNCTION OF TEMPERATURE

The density of water is also dependent upon temperature. Table 2 summarizes the density of freshwater at various temperatures.

TABLE 2
Relationship Between Temperature and Density of Freshwater

Temp. (°C)	Density (g/cm3)	Temp. (°C)	Density (g/cm3)	Temp. (°C)	Density (g/cm3)
1	0.999900	11	0.999605	21	0.997992
2	0.999941	12	0.999498	22	0.997770
3	0.999965	13	0.999377	23	0.997538
4	0.999973	14	0.999244	24	0.997296
5	0.999965	15	0.999099	25	0.997044
6	0.999941	16	0.998943	26	0.996783
7	0.999902	17	0.998774	27	0.996512
8	0.999849	18	0.998595	28	0.996232
9	0.999781	19	0.998405	29	0.995944
10	0.999700	20	0.998203	30	0.995646

Source: *Win-Situ 4 User Manual* (In-Situ, 2003)

The United States Geological Survey paper *Quality Assurance and Analysis of Water Levels in Wells on Pahute Mesa and Vicinity, Nevada Test Site* (WRIR 00-4014), available at http://pubs.usgs.gov/wri/WRIR00-4014/text/contents.htm, summarizes the methodology to correct groundwater elevations for temperature-dependent density.

[1] The term EC, as used here, is actually SC because Topock field meters automatically convert to conductance at 25°C.

SALINITY AND TEMPERATURE ADJUSTMENTS FOR GROUNDWATER ELEVATIONS

Manual and transducer water-level data at Topock have been adjusted for salinity and temperature since January 2003. The salinity- and temperature-adjusted water elevations are stored in the ***CorrectWElev*** field in ***tblWaterLevel*** (manual water-level data) and in the ***HydHead*** field in ***tblPT*** (transducer data). It is assumed that:

- The salinity of the water column in wells is constant throughout the water column.
- The bottom of the well is the measurement point, and the entire water column is adjusted for salinity and temperature by the processes in this SOP.

The salinity adjustment (SalCorr), measured in feet (ft), for each water elevation is calculated as follows:

$$SalCorr\ (ft) = Column \times SAL \times 0.0071 \quad (3)$$

where:

SAL = the salinity of the water column in percent (%).
Column = the height of the water column to be adjusted in feet (ft).

The temperature-dependent density of water within the well is determined using the following empirical equation:

$$Density\ (g/cm^3) = 4.78\text{x}10^{-8}\ T^3 - 8.15\text{x}10^{-6}\ T^2 + 6.16^{-5}\ T + 1.00 \quad (4)$$

where:

T = temperature in degrees Celsius (°C).

The temperature adjustment (TempCorr) for each water elevation is calculated as follows:

$$TempCorr\ (ft) = Column \times [1/Density] - Column \quad (5)$$

For manual water-level data, the temperature- and salinity-adjusted groundwater elevation is calculated as follows:

$$CorrectElev\ (ft\ AMSL) = RawElev + SalCorr + TempCorr \quad (6)$$

where:

RawElev = the groundwater elevation in feet above mean sea level (ft AMSL) with no adjustment for temperature or salinity.

For transducer data, the temperature- and salinity-adjusted groundwater elevation is calculated as follows:

$$HydHead\ (ft\ AMSL) = PressHead + Offset + SalCorr + TempCorr \quad (7)$$

where:

PressHead = the height of the water column above the transducer in ft
Offset = the elevation of the transducer above the datum in ft AMSL.

SOP-A23

Sample Handling and Custody
Standard Operating Procedures for PG&E Topock Program

PURPOSE

The purpose of this standard operating procedure (SOP) is to delineate protocols for sample handling and custody for the PG&E Topock Program environmental monitoring activities associated with the Topock Compressor Station (TCS) in Needles, California. An example chain-of-custody (CoC) form and sample custody seals are provided as part of this procedure (see Attachment 1). Other formats with essentially identical information are acceptable.

SCOPE

This procedure applies to all PG&E personnel, contractors, and subcontractors engaged in collecting environmental samples related to the Topock investigation and remedial activities.

GENERAL

An essential part of the sampling activities of any environmental project is assuring the integrity of the sample from collection through data reporting. This SOP will address all sample custody issues up through sample relinquishment to the courier to deliver samples to the laboratory final destination. Sample labels, CoC forms and custody seals are used to document identification and handling/control (custody) of samples from the time of collection through the completion of chemical analysis. Accountability of the history of a sample must be available to demonstrate that the data are a true representation of the environment. The CoC record is used as evidence to demonstrate that a sample was not tampered with or altered in any way that might bias the analytical accuracy of the laboratory results since the time of its collection. It is extremely important that chain-of-custody records be complete, accurate, and consistent. In some projects, including this one, sample custody records and analytical data may be used in litigation. In all cases of custody, the accuracy and completeness of records is critical for evidentiary use whether as part of the normal data validation procedure or in a litigious project environment. All sampling activities for the Topock environmental program must adhere to the procedures in this SOP in order to ensure complete, accurate, and consistent project data.

DEFINITIONS

1. Custody: A sample is under custody if it is in physical possession or under control so as to prevent tampering or alteration of its characteristics. A sample is considered to be in an individual's custody if it is (1) in the physical possession of the responsible party, (2) in view of the responsible party after being in their possession, or (3) placed by the responsible party in a designated, secure area that is controlled with restricted access.

2. Sample Label: A record attached to samples to ensure legal documentation of traceability. Attachment 1 includes an example of the sample labels that are used.

3. Chain-of-Custody Record: Legal documentation of custody of sample materials and instructions for the analytical laboratory. Attachment 1 includes an example of a CoC form.

RESPONSIBILITIES

Project Manager

The *Project Manager* (PM) shall ensure that staff conducting these procedures are properly trained. Prior to the sampling event, the PM shall review and approve the planned sample table (PST). In addition, sampling staff must consult the PM if any complications arise with following these critical sample handling and custody procedures.

Project Chemist

The *Project Chemist* shall review and approve the PST. In addition the chemist shall be consulted in the event any questions surface concerning sample handling and custody procedures.

Field Team Leader/Sampling Coordinator

The *Field Team Leader/ Sampling Coordinator* (FTL/SC) shall assure that the systems are maintained to create CoC forms from the sample-tracking database. In addition, the FTL/SC is responsible for production of CoC forms and sample labels for the field crews. The FTL/SC shall also take responsibility for or delegate the packing of the sample shipping coolers, ensure that the CoC forms are correct, and ship the samples (or transfer to laboratory sample pickup) as described in this SOP. The FTL/SC shall determine or seek guidance as to which samples are potentially hazardous and the appropriate shipping method, if needed.

Sample Collector

The *Sample Collector* shall ensure that the samples are correctly collected (following the appropriate SOP), labeled, and stored until the FTL/SC takes custody of the samples for shipping to the laboratory. The Sample Collector shall maintain custody of the samples until said time that the FTL/SC takes custody. The Sample Collector shall be responsible for informing the FTL/SC of sampling conditions and recording sampling conditions on the groundwater sampling log. (Note: The FTL/SC, Sample Collector, and Sample Shipper may be the same person.)

Sample Custodian

The *Sample Custodian* is any individual who is responsible for the custody of samples and completion of associated documentation and may include the FTL/SC, Sample Collector, or on large events, a separate Sample Shipper.

PROCEDURE

Sample Custody

Sample custody procedures are designed to ensure that sample integrity is maintained from collection to the final receipt of the analytical report. A critical aspect of sound sample collection and analysis protocols is the maintenance of strict CoC procedures, as described in this SOP. CoC procedures include tracking and documentation during sample collection and shipment.

As noted above, a sample is considered to be in an individual's custody if it is (1) in the physical possession of the responsible party, (2) in view of the responsible party after being in their possession, or (3) placed by the responsible party in a designated, secure area that is controlled with restricted access.

Custody will be documented throughout all sampling activities by the electronic sample-tracking database or on the official CoC record for each day of sampling. The electronic data will be used to generate the official CoC if an electronic sample-tracking database program is used. In either case the official CoC will accompany the samples from the site to the laboratory. The sampling team member who relinquishes the samples to the courier or laboratory personnel is required to sign, date, and note on the CoC the time when relinquishing samples from his or her immediate custody. Once signed by the FTL/SC/Sample Collector and the laboratory courier, a copy of the CoC will be made and kept with the other sampling related paperwork. Any discrepancies in the custody procedure noted and corrected must be communicated to the PM and project chemist immediately to determine possible corrective action(s).

Samples will be shipped to subcontractor laboratories via laboratory courier. In some cases, samples may be hand-delivered to the laboratory; hand delivery will be noted on the CoC form. In the event the laboratory is not within driving distance, an overnight air courier will be used. Bills of lading will be used in addition to other custody documentation during this time and will be retained as part of the permanent sample custody documentation. The subcontractor laboratory is responsible for sample custody once samples are relinquished to their custody and at that point laboratory SOPs for custody must be followed. Final completed CoCs from the field and shipping efforts as well as internal laboratory custody records will be provided with the final laboratory data submission.

Sample Labels

A sample label must be attached to all sample containers prior to collecting the sample. (**Note**: Do not attach new labels to pre-weighed soil volatile organic compound or gasoline range organic vials; use the labels attached by the laboratory. Additional labels may be affixed to the recloseable plastic bag if needed). The label may be generated along with the CoC form using a sample-tracking database (use waterproof labels), or may be hand-generated using a blank sample label purchased or provided by the laboratory with the sample bottles. For certain types of samples (for example, Summa™ soil gas canisters), blank labels are provided by the laboratory when the lab provides sample containers. All sample labels generated will contain the following information in indelible ink:

- Unique Sample ID
- Analyses requested
- Preservative used
- Date and time of sample collection
- Sampler's initials

Once the sample has been collected and the sample labeling is complete, the Sample Collector will place the samples in recloseable plastic bags and place in a cooler on ice. Labeling for other types of containers (such as soil gas and air samples) will follow the same labeling procedure except that the labels are attached to the sample containers (summa canisters, filters or tubes) via a sample tag attached to the container by the laboratory.

Chain-of-Custody Record

CoC forms are legal documents that record the custody of the sample from collection through reporting. If the sampling event is using an electronic sample-tracking database, the CoC will be

generated at the end of the day; if not, CoC form(s) will be filled out for each sample at each sampling location to maintain a record of sample collection, shipment of samples, and receipt of samples by the laboratory.

The FTL/SC or Sample Collector will generate the CoC form. Information entered on the CoC includes:

- Project name and project number or task order
- PG&E/contractor address and contact information
- Name and address of laboratory to receive the samples
- Unique sample ID
- Matrix type
- Analyses requested
- Field quality control (QC) for matrix spike and matrix spike duplicate (MS/MSD) samples, if applicable
- Container type, size and number
- Preservatives used
- Turn-around-time for laboratory analysis
- Comments to Laboratory, if applicable
- Date of collection
- Time of collection (24-hour format)

The FTL/SC or Sample Collector shall verify that the CoC record is complete, accurate in all aspects, and consistent with all other sample documentation (for example, number of samples, sample labels, purge forms, field logs). The FTL/SC or Sample Collector will sign the "Relinquished By" fields on the CoC record, marking the date and time custody is transferred to the laboratory courier or other common carrier service (e.g., FedEx, UPS, U.S. Postal Service, Golden State).

If using a common carrier service, the Sample Shipper will perform the following duties:

- Obtain any required signatures from sampling team.
- Record the carrier service and airbill number on the CoC.
- Sign and enter the date and time relinquished to the common carrier service or courier.

Corrections: If there are any corrections to the CoC form needed, corrections will be made by a single-line strike mark through the incorrect item, and then entering the correct entry adjacent to the strikeout item. Corrections will be initialed and dated by the person making the change. After the form has been inspected and determined to be satisfactorily complete, the Sample Shipper will sign, date, and note the time of transfer and will reference a shipper tracking number on the form (if applicable). If the samples are being shipped by common carrier service, the CoC form will be placed in a recloseable plastic bag and placed inside the cooler after the

sample packer has detached or made an appropriate copy of the form. Field copies of the completed CoC forms are maintained in project files by on site personnel.

Overnight Sample Storage

In some cases, samples cannot be shipped immediately to a laboratory and must be temporarily stored in a secured onsite facility. There are two locations where secured refrigeration is available onsite.

The IM-3 field lab has limited space for samples in its refrigerator and can be used to temporarily store samples associated with the IM-3 operations. The facility is manned 24 hours a day 7 days a week and has restricted access.

The Topock field office trailer has a refrigerator that is dedicated to short-term sample storage, as well as two freezers that can be used for samples that require freezing. The field trailer is locked during non-business hours and the refrigerator is locked when staff are not present.

The samples placed in the refrigerators cannot be in coolers, but should be stored in recloseable plastic bags, grouped by sample location and laboratory. The refrigerators must be maintained at a temperature between 2° and 6°C.

Custody Seals

For normal shipping (samples sent via laboratory courier) no custody seals are required. For shipping via common carrier service, the shipping cooler must have two custody seals: one on the front and one on the side of the cooler, signed, dated, and marked with the time the cooler was sealed (the signed CoC should be in a recloseable plastic bag, taped to the inside of the cooler's lid). In addition, each custody seal will be covered with transparent packing tape.

RECORDS

The FTL is responsible for the distribution of the CoC record:

- Original: Sealed in plastic bag and taped inside the top of the shipping container (if shipped via common carrier service) or handed to the laboratory representative.
- Copies to Project Chemist and PM or Task Manager

Attachment 1
Sample Chain-of-Custody Form and Sample Custody Seal

CH2MHILL

CHAIN OF CUSTODY RECORD

Project Name PG&E Topock
Location Topock
Project Manager
QC Manager
Project Number
Project
Turnaround Time 10 Days
Shipping Date:

				Container:	8oz soil jar	8oz soil jar	8oz soil jar	8oz soil jar	3-40ml vials	8oz soil jar	8oz soil jar	8oz soil jar		
				Preservatives:	4°C	4°C	4°C	4°C	1-MEOH 2-DI H2O <0°C	4°C	4°C	4°C		
				Filtered:	NA	NA	NA	NA	NA	NA	NA	NA		
				Holding Time:	14	14	14	14	14	14	14	14		
	DATE	TIME	Matrix		Hexavalent Chromium (SW7199/3060A)	Title 22 Metals (SW6010B/SW7471A)	PH (SW9045)	Dioxins/Furans (SW8290)	TPH-Purgable (SW8015B)	TPH-Extractable (SW8015B)	SVOC (8270C)	PAHs (SW8270Sim)		Number of Containers	COMMENTS

Signatures	Date/Time
Approved by	
Sampled by	
Relinquished by	
Received by	
Relinquished by	
Received by	

Shipping Details

Method of Shipment: Lab Courier
On Ice: yes / no
Airbill No:
Lab Name: ADVANCED TECHNOLOGY LABORATO
Lab Phone: (702) 307-2659

ATTN:

Sample Custody
and
Marlon

Special Instructions:

Report Copy to

Shawn Duffy
530-229-3303
sduffy@ch2m.com

CH2MHILL CUSTODY SEAL

Date

Signature

CH2MHILL CUSTODY SEAL

Date

Signature

CH2MHILL CUSTODY SEAL

Date

Signature

CH2MHILL CUSTODY SEAL

Date

Signature

CH2MHILL CUSTODY SEAL

Date

Signature

CH2MHILL CUSTODY SEAL

Date

Signature

CH2MHILL CUSTODY SEAL

Date

Signature

CH2MHILL CUSTODY SEAL

Date

Signature

CH2MHILL CUSTODY SEAL

Date

Signature

CH2MHILL CUSTODY SEAL

Date

Signature

CH2MHILL CUSTODY SEAL

Date

Signature

CH2MHILL CUSTODY SEAL

Date

Signature

CH2MHILL CUSTODY SEAL

Date

Signature

CH2MHILL CUSTODY SEAL

Date

Signature

CH2MHILL CUSTODY SEAL

Date

Signature

CH2MHILL CUSTODY SEAL

Date

Signature

CH2MHILL CUSTODY SEAL

Date

Signature

CH2MHILL CUSTODY SEAL

Date

Signature

SOP-B16

Field-portable X-Ray Fluorescence Soil Sampling Standard Operating Procedures for PG&E Topock Program

---

This SOP describes the analysis of *in-situ* and *ex-situ* soil samples using a field portable X-Ray Fluorescence instrument (XRF). SOP-B2 and SOP-B3 in the *Sampling, Analysis, and Field Procedures Manual, PG&E Topock Program* (Procedures Manual; CH2M HILL, 2005) provide additional guidance for soil characterization and logging.

Required Documents

1) Event-specific planned sample table (PST).
2) Applicable project work plan or monitoring plan. Refer to the Procedures Manual, Operation and Maintenance (O&M) Manual, and QAPP as required.
3) Topock Program Health and Safety Plan (HSP).
4) Field notebook.
5) Database generated chain-of-custody.
6) XRF Functional Check Log

Preparation and Setup

1) Review event-specific PST or event-specific field instructions, previous sampling logs, Procedures Manual, and HSP.
2) Coordinate with the Project Chemist for coolers, sample containers, and courier pickup of the samples.
3) Initiate field logbook for sampling activity.
4) Initiate electronic file for X-Ray Fluorescence (XRF) instrument download.
5) Review sampling procedures and planned sample depths with field crew.
6) Field-check and set up equipment for functional checks, sampling, decontamination, spill prevention, and health and safety.

Equipment List

- Niton XRF Meter and stand
- Spare battery chargers
- Field notebook
- Trowel for smoothing soil surfaces
- Reusable plastic bags or stainless steel tray

- Disposable Sample cups with X-ray film and lids
- X-Ray window film (Mylar, Kapton, Spectrolene, polypropylene, or equivalent; 2.5 – 6.0 micrometers (um) thick)
- Disposable scoops, stainless steel spoons or other appropriate mixing tools
- Appropriate quality control (QC)/quality assurance (QA) standards, and blank sand
- Chemwipes
- Decontamination equipment (Alconox® solution (or equivalent) in spray bottle, brushes, buckets, rinse water spray bottle) for mixing tools and trowels
- Protective waterproof gloves (nitrile or latex)

XRF SOIL ANALYSIS DOCUMENTATION

The XRF sample results will be recorded by the associated software in an excel format. The files will be downloaded at the end of each day and emailed to the project chemist for review. Any additional sample logging and sample collection should follow the protocol and procedures found in the *Sampling, Analysis, and Field Procedures Manual, PG&E Topock Program* (CH2M HILL,2005). Detailed notes should be recorded in the sampler's field notebook or in a log generated from the field database. Items to be documented on the sampling log include (note: include as much of the following information in the XRF software as possible):

1) Record type of boring or excavation equipment and the total boring or excavation depth.
2) If multiple samples are being collected at one location at a variety of depths, record all sample depths.
3) Record date and time of sample collection in addition to the full sample ID that is listed in the PST.
4) Sampling difficulties shall be noted (i.e. difficult slope or abnormal debris in sample location).
5) Analysis start time and the source count time (i.e. 60 sec, 90 sec, or 120 sec etc.) will be documented on sample collection sheet. Note: analysis and count time are automatically recorded in the XRF software.

Field-portable X-Ray Fluorescence Soil Sampling- COLLECTION OF SAMPLES FOR ANALYSIS

***In-Situ* Sample Preparation**

When the soil moisture is less than 20 percent, the error associated with moisture may be minimal. If areas are encountered where the moisture content is greater than 20 percent (moisture is visible), consult with the project chemist for options available for proceeding with field analysis.

For *in-situ* analysis:

1) Large or non-representative debris must be removed from the selected location. This debris includes rocks, gravel, vegetation and concrete.

2) The location chosen for analysis should be homogenized by mixing in place an area approximately 4" by 4" by 3" deep, using a clean (or decontaminated) stainless steel or disposable spoon. The location should then be smoothed and firmly tamped to provide as flat and smooth an area as possible.

3) A section of x-ray window film should be stretched over the area to be tested to maintain a dust free environment for the nose of the instrument. (Note: use in-situ analysis for metals only samples).

4) To initiate a reading, the nose of the XRF will be positioned against the x-ray film, squeezing the shutter release, and firmly pressing the instrument flat against the surface. Source count times for *in-situ* analysis usually range from one to two minutes, varying among instruments and depending on requirement detection limits.

5) After the *in-situ* field screening is performed, inspect the nose of the instrument for contamination, which may affect future analysis. If necessary, clean it with a soft cloth or tissue.

For confirmation samples, or where samples for organic analysis are to be collected the soil samples should be treated as ex-situ samples, below.

Ex-Situ Sample Preparation

For *ex-situ* analysis:

There are several possible correct methods for the ex-situ analysis of samples. The area that previously would have been homogenized for the in-situ analysis should be scooped out and placed into a clean (or decontaminated) stainless steel or disposable pan (do not use plastic if organic analysis will be performed on any of this homogenized sample), using a stainless steel or disposable spoon or spatula (do not use plastic if organic analysis are associated with the homogenized sample). The sample should then be thoroughly mixed (homogenized) using the same spoon or spatula.

1) The preferred method is to setup the portable field stand in an area where the XRF can be stationed and left in place for the day. Use the Niton software and a laptop computer to setup the method criteria and control the XRF instrument during the soil analysis.

    a) Starting with the previously homogenized sample, use the supplied soil sieves, bowl, and mortar to generate a finely ground well homogenized sample. (Note: This step is not required if the soil sample was passed through a sieve during the homogenization step.)

    b) Transfer the prepared sample into a new sample cup (order replacement supplies from Niton), place the X-ray film over the cup and snap the lid in place. Place the sample cup in the portable field test stand (The XRF points upward, the sample rests

on top of the XRF with the X-ray film directly in contact with the nose of the XRF - cup lid facing down).

c) Using the computer, start the analysis. The source count time should be at least two minutes for chromium. Consult previous analysis to determine if multiple scan frequencies are required (or contact the project chemist).

d) Prepare the next sample while the XRF is analyzing the current sample.

2) An alternative method to using the portable field stand is to identify the sample for XRF analysis and homogenize the sample (as described above).

a) Transfer the sample to a re-sealable plastic bag and firmly molded into a flat smooth surface.

b) Use the Niton software and a laptop computer or the included PDA to setup the method criteria.

c) To start the analysis, position the nose of the XRF against the flat smooth surface of the sample and squeeze the shutter release (or press the start button on the laptop or PDA). Be sure to maintain constant pressure against the sample. If contact is broken, the analysis will need to be restarted. The source count time for *ex-situ* analysis usually range from one to two minutes, depending on the required detection limits (see *c* above for count times).

d) After the ex-situ field screening is performed, inspect the nose of the instrument for contamination, which may affect future analysis. If necessary, clean it with a soft cloth or tissue.

3) Transfer the sample to a labeled glass jar for shipment to the confirmation laboratory (if applicable).

Sample Analysis

In today's modern XRF models:

1) An X-ray source is used for detection. Expose the sample to the X-ray source for a minimum of one minute. Longer exposure times may be needed depending on the media that is being analyzed and the required detection levels. The time needed for analysis will be determined in the field by analyzing standards that have concentrations of the metals of concern near the required detection levels. Better detection limits can usually be obtained by homogenizing the sample, increasing the exposure time, and using two or more scan frequencies (Use a minimum of a two minute exposure for Chromium analysis).

2) When the XRF instrument displays the results they include the analyte, the result, and a percent confidence (displayed as a ± value). The result is displayed as non-detect for analytes that do not meet the percent confidence established in the instrument. The lower the required detection levels, the longer the analysis time required to meet the percent confidence.

3) Download saved data from XRF instrument daily (if data is collected in PDA). Foreword the data files to the project chemist daily.

4) All samples collected for off-site confirmation will also be analyzed using the XRF and treated as *ex-situ* samples.

Using older models:

1) Expose the sample to the energy source for a minimum of one minute. Longer exposure times may be needed depending on the media that is being analyzed as well as the age of the detector (non X-ray detectors). The time needed for analysis will be determined in the field by analyzing standards that have concentrations of the metals of concern near the required detection levels. Better detection limits can usually be obtained by homogenizing the sample, increasing the exposure time. (Use a minimum of a two minute exposure for Chromium)
2) When the XRF instrument indicates the results for the suite of analyzed elements and their concentrations, it includes a standard deviation for the reported concentrations. An analyte concentration is considered **not detected** if the result value is **less than two times the standard deviation**. The lower the required detection levels, the longer the analysis time required to reduce the result's standard deviation.
3) Record the readings (electronically or documented on the sampling log). Review the standard deviations for the elements of interest and determine if a longer analysis time is needed to reduce the standard deviations, thereby allowing the desired accuracy and precision for the concentrations. The standards will be analyzed using increasingly longer times until the required detection level is achieved.
4) Record values in field notebooks.
5) Download saved data from XRF instrument daily.
6) Samples collected for off-site confirmation will also be analyzed using the XRF and will be treated as *ex-situ* samples.

Calibration

Two forms of calibration are important with XRF testing: an energy calibration and a sample matrix calibration.

Energy Calibration

The Niton XLi 702 automatically re-calibrates the energy scale when powered on. The energy scale can also be re-calibrated by pressing "Reset" on the instrument. The energy calibration should be performed every two hours.

Sample Matrix Calibration

Modern XRF instruments, such as the Niton Xli 702, do not require site specific calibrations to account for sample matrix effects. EPA Method 6200 allows both fundamental parameters and Compton normalization as two techniques to eliminate site specific calibrations. Niton uses the Compton normalization method to automatically correct for sample specific matrix effects. The XRF is calibrated internally at the factory on NIST standard reference soil samples. Ensure the annual factory calibration certification is on file. This internal calibration is used for subsequent field work, without need for adjustment or recalibration at other sites.

Quality Assurance and Quality Control (Functional Checks)

Even though no onsite calibration will be performed, the method does require QA/QC Functional check testing protocols. The QA/QC that will be used to document that the XRF is operating properly will have the following steps:

- A startup operations check
- Analysis of a blank sample (clean sand)
- Analysis of standard sample(s)
- Analysis of duplicate samples
- QA/QC procedures will be compliant with manufacture's instructions.

1) At the beginning of each day perform QA/QC functional check procedure or when the instrument is turned on after more than 2 hours of down time or if the operating environment changes, such as a temperature change of more than 20 degrees Fahrenheit.

2) Two types of blanks should be analyzed, an instrument blank and a method blank. An instrument blank sample (silicon dioxide, provided by Niton) will be analyzed at the start and end of each day and once every 20 samples, to confirm proper zero calibration of the XRF. The blank will be analyzed following the procedure for the *ex-situ* sample analysis. A method blank is used to monitor for any field induced contamination. The method blank should follow any preparation procedures performed on the samples, such as mixing or *exsitu* analysis. **A method blank will be analyzed each day**.

3) A set of three to ten QC samples will be collected from the site during the initial field activities. These samples will be well homogenized, and a portion sent to the off-site laboratory for characterization. The remaining sample will be collected in re-sealable bags, labeled and stored with the XRF for use as standards. Three to five of the on-site standards will be analyzed at the start of each day. The results of the standards will be plotted against the original XRF results and a correlation value calculated. A correlation coefficient of 0.90 or greater must be achieved to meet the project objectives. A running log of all on-site standards analyzed will be maintained. One of the standards will be analyzed after every 20 samples. The readout from the XRF **must be within 20 percent RPD of the known QC sample concentration**.

4) The last QA/QC step will be to analyze duplicate samples (two separate aliquots) at a rate of 1 in 10. These duplicate measurements must be within 35 percent of each other for the analysis to continue. If the sample results are not in agreement, then the reason for this discrepancy must be determined.

5) The Niton XL3t 600 displays both concentration and precision for each sample analyte measurement. The precision displayed by the Niton's 95% (2-sigma) confidence intervals; where as the precision calculated in EPA method 6200 is at a 68% (1-sigma) level. The Niton also calculates and displays detection limits for analytes if the concentration is below three standard deviations. This bypasses the need for replicate measurements on low level standards.

Note: VOC, SVOC, and other organic samples can not be collected from the homogenized soil if plastic is used for homogenizing or after XRF analysis, if contacted by plastic.

SOP-C1

Solinst Pressure Transducers
Standard Operating Procedures for PG&E Topock Program

This standard operating procedure (SOP) addresses the procedures, equipment, and documentation needed when using Solinst Levelogger pressure transducers (PTs) at the Topock site.

REQUIRED SOFTWARE:

Solinst Levelogger software – latest version

REQUIRED DOCUMENTATION:

- Solinst User Guide – Levelogger Series – Software Version 4 (November 5, 2013) (User Guide 1) or more recent updates
- Solinst User Guide – Leveloader Gold (October 23, 2013) (User Guide 2) or more recent updates
- Performance Monitoring Program Transducer Download Log (attached)
- Compliance Monitoring Program Transducer Download Log (attached)
- Groundwater Sampling Log (attached)

REQUIRED EQUIPMENT/SUPPLIES:

- One or more Solinst Levelogger PT
- One or more Solinst Leveloader
- One or more Solinst Barologger
- Solinst Optical Connector
- Solinst Direct Read Cable
- Solinst Direct Read Connector
- Solinst PC Interface Cable
- PVC well cap with slot cut in the side for PT or Solinst 2-inch well cap or expanding locking well cap
- Deionized water
- Paper towels
- Personal computer (PC) with internet access
- Camera for documenting PT installations
- Water-level meter
- Assemble a tool kit containing:
  - Replacement PT O-rings
  - Replacement PT locating pins
  - Wire ties (also called zip-ties or cable ties)
  - C-flex tubing

*****Note: Read the user guides for equipment before working with the transducer network at Topock.*****

SOFTWARE SETUP:

1. Install the Levelogger software on the PC as described in the User Guide 1, Section 3.0.
2. Configure the Levelogger program and install drivers as described in User Guide 1, Section 4.0.

TRANSDUCER SETUP:

*****Note: If reprograming a PT that has previously been used at Topock, verify all data have been downloaded from the device before proceeding with transducer setup to prevent unintentional loss of data.*****

***With a PC*:**

1. Open the Levelogger program previously installed on the PC.
2. Connect the PT to the computer using either an optical reader or a PC interface cable.
3. Connect to the PT as directed in User Guide 1, Section 5.0.
4. Download data from the PT as described in the "Downloading Data from a Transducer" section below, this will prevent unintentional loss of any data stored on the PT.
5. Update the PT settings in the "Datalogger" section of the Datalogger Settings Tab in the Levelogger program (shown in User Guide 1, Section 5.0) as follows:
   a) Location: Well name (for example, MW-34-100)
   b) Project ID: PG&E Topock
   c) Ch1: Level
      - Identification: Level
      - Unit: ft
      - Offset (ft): 0
   d) Ch2: Temperature
      - Identification: Temperature
      - Unit: °C
   e) Datalogger Sampling Mode
      - Sampling Type: Linear
      - Sampling Rate: 30 minutes
   f) Datalogger Memory Mode: Continuous
   g) Start/Stop Datalogger:
      - Click the *Start Now* button to load the above settings into the PT, then click the *Stop Now* button when it becomes an available option to stop the logger.
      - Next, set to *Future Start* at the next round half hour after approximate anticipated PT installation time (for example, if PT installation is expected at around 8:00 to 8:15 a.m., set *Future Start* for 8:30:00 a.m.).
      - **Note:** The *Future Start* setting can be added in the field with the instructions below if the approximate installation time is not known.
6. Disconnect the PT and install in monitoring well as described below.
7. Setting the time on the PT: Sync to the Leveloader as described in the "With a Leveloader Gold (Handheld) Device" section below.

With a Leveloader Gold (Handheld) Device:

1. Power on the Leveloader device.
2. Connect the PT to the Leveloader via a direct-read connector (when already installed in the well) or optical connector.
3. On the main Leveloader Screen, select *Connect to Logger*.
4. Download data from the PT as described in the "Downloading Data from a Transducer" section below; this will prevent unintentional loss of any data stored on the PT.
5. Return to the main menu.
6. Scroll down to *Edit Levelogger* and click *OK*.
   a) If the PT is currently logging, a prompt will appear to push both the up and down arrows simultaneously to stop the logging before edits can be made. Edit each category by scrolling to it and clicking *OK* as shown in User Guide 2, Section 8.4. Use the values listed in the "With a PC" section above for each category.
   b) The final step of any edit is to scroll to and highlight *Submit* and press *OK*.
   c) Setting the time on the PT: It is best practice to sync the time whenever an edit is made to the PT.
      - The time will sync by clicking *Edit* with the time entry selected.
      - **Note**: The PT time is set to Pacific Standard Time year-round. This means that the time shown on the Leveloader and the time on the PT will be 1 hour behind the actual time during the daylight saving time period (second Sunday in March through the first Sunday in November).

TRANSDUCER INSTALLATION:

Proper installation of PTs is very important. The PTs measure the height of water above the sensor, or pressure head. Following calibration, the height of water (pressure head) is converted into a groundwater elevation (or hydraulic head, which is pressure head plus the elevation). Improper installations can result in errors in PT readings completely invalidating data. Some goals for PT installation are:

1. Install the PT so that it is possible to remove and reinstall it easily in the same location.
2. Install the PT from a solid mount so that it will not move due to gravity, opening or closing of the well, etc.
3. Install the PT at least 5 feet below the current depth to groundwater, but no more than 15 feet below the current depth to groundwater, unless the monitoring well is located near a pumping well. If the monitoring well is located near a pumping well, install the transducer at least 5 feet below the maximum expected pumping depth to water (DTW); see step 4 below.
4. If a PT is to be installed near a pumping well, request the estimated pumping water-level depth before installation. Install the PT to at least 5 feet below the estimated maximum pumping DTW.

Installation Procedure:

1. The PT will be installed using one of the following methods:
   - A slotted PVC cap and a positive stop on the PT direct-read cable. The PT is either positioned to the side of the PVC cap, where there is room, or on top of the PVC cap.

Positioning instructions should be written on the PVC cap with permanent marker (see Figure 1 below).

  - The positive stop is typically a 1- to 2-inch piece of white c-flex tubing cut along the long axis and secured around the direct read cable with two wire ties.

- A Solinst well cap for 2-inch-diameter wells. The PT and attached direct-read cable are threaded through the large hole on top of the Solinst well cap. The large end of the direct-read cable fits snuggly into the hole on top of the well cap (see Figure 2 below).
- Hanging the PT securely from the bottom of the expandable locking well cap in flush-mount wells (this applies to all flush-mount wells with PT installations). The method of attachment to the expandable locking well cap will depend on the cap itself and should be discussed with the field coordinator prior to installation.
- If necessary, the PT can be hung on other brackets or hangers already installed at the well head (for example, pump brackets).

2. The PT should be attached to a large object prior to bringing it to the well to prevent the PT from being accidentally lost down the well. The most common object is a large, orange plastic disk.
3. The PT should then be lowered down the well and securely positioned at a predetermined depth.
   - The depth of the installation depends on the DTW and the pressure range of the sensor. F30/M10 (30 feet/10 meter) PTs have a pressure range of ~30 feet and should be installed at least 5 feet below the water table but not more than ~25 feet below the water table. A PT with a range of F15/M5 should be installed no more than ~10 feet below the water table.
   - The submersion depth of the PT can be monitored by using the Real Time data view described below.
   - If wells will be used for monitoring pumping tests, water levels could drop significantly (that is, do not install the PT only 5 feet below the water table if expected drawdown is 10 feet).
   - If the direct-read cable used for the installation is longer than needed, secure the extra length neatly inside of the secured/locked well vault with wire ties.
4. Record time-synchronized manual water level and PT pressure readings:
   - Measure DTW below top of casing (BTOC) at the measuring point (see SOP A-7, Water Level Measurements, for detailed instructions). Record this information along with the date and time in the field logbook or the appropriate transducer download log.
   - Record real-time pressure in feet measured by the PT in the field logbook or transducer download log as described below:
     a) Connect the PT direct-read cable to the Leveloader device (or PC using instructions in the "PT Setup" section above) with a direct-read connector.
        - The direct-read connector has a tendency to become loose at the connection to the Leveloader; verify full connection prior to connecting to the PT.
     b) Select *Connect to Logger* and click *OK*.
     c) If the PT does not connect or shows a data corrupt error, see "Transducer Troubleshooting" section below.

d) When PT is connected, select *Real Time – View Only* and click *OK*.

e) Record the real-time value for pressure measured in feet.



Figure 1 – Installation of PT with PVC Cap and Positive Stop



Figure 2 – Installation of PT with Solinst Well Cap

TEMPORARY PT REMOVAL/REINSTALLATION DURING WELL SAMPLING:

1. Open well protection lid and inspect PT installation. Note the PT installation setup to ensure the PT will be reinstalled in exactly the same place. Take a photograph before PT removal to document PT position.
2. Before removing the PT, measure DTW BTOC according to SOP-A7, Water Level Measurements. Record the exact time to the nearest minute and the DTW BTOC in the transducer section of the groundwater sampling log.
3. Remove the PT, coil the cable, and store in a manner to prevent contamination of the cable and probe. Record the time of removal on the sampling field sheet.
   - A clean, plastic garbage bag or leaf bag can be used to store the PT. Alternately, the PT can be stored in the bag used to contain the well-specific pump tubing.
   - If the PT becomes dirty or contaminated, rinse with purified water or wipe thoroughly with a purified water moistened paper towel to decontaminate per SOP A-10, Decontamination of Water Sampling Equipment.
4. When groundwater sampling is completed, reinstall the PT, restoring the correct setup of the PT mounting hardware as documented in the setup photograph. Record the time of reinstallation on the sampling log.
5. Measure the DTW BTOC at least 5 minutes after reinstalling the PT according to SOP-A7, Water Level Measurements. Record the time and DTW BTOC on the sampling log.

DOWNLOADING DATA FROM A TRANSDUCER:

Data downloads should be conducted at least monthly to provide data for analysis and evaluation and to ensure the PT is working properly.

- Data should be screened in the field to ensure that data extend to the download date (that is, is still recording) and that the data make sense (that is, the sensor has not "maxed out" its pressure range and data are garbled, which can happen when a PT fails).
- Battery life should be checked to ensure the PT will continue to operate well into the future.

Downloading the Data from the Transducer with a Leveloader Gold Device:

This procedure will be used when downloading data from a PT.

1. Open well protection lid and inspect PT installation. Note the PT installation setup to ensure the PT will remain in exactly the same place. Take a photograph to document PT position.
2. Measure the DTW BTOC according to SOP-A7, Water Level Measurements. Record the exact time to the nearest minute and the DTW BTOC on the appropriate transducer download log.
3. Connect the direct-read cable to the Leveloader device with a direct-read connector.
   - You can also connect directly to the PT with an optical connector.
4. Select *Connect to Logger* and click *OK*.
   - If the PT does not connect or shows a "data corrupt" error, see "Transducer Troubleshooting" section below.
5. Select *Real Time – View Only* and click *OK*.
6. Record the real-time value for pressure/depth on the appropriate transducer download log.
7. Click the *Menu* button to return to the main menu.

8. Select *Data from Logger* and click *OK*.
9. Record the Levelogger serial number (shown as, e.g., #1013653 or similar at the top of the screen) and battery remaining percentage (shown on the top of the screen) on the appropriate transducer download log.
10. Click the *Save Log* button to begin the download.
11. When download is complete, click the *Menu* button to return to the main menu.
12. Select *View Stored Data* and click *OK*.
    - Scroll as necessary to the last log collected and check the serial number to ensure that the log was properly recorded to the Leveloader.
13. Click the *Menu* button to return to the main menu, then click *Return* to disconnect from the Levelogger.
14. Disconnect the Leveloader from the PT direct read cable. Replace all PT hanging mounting hardware as it was before the download, referring to the photograph taken previously if needed.
15. Record the File Number on the appropriate transducer download log in the format: Unit Number-File Number (for example, 4-25).

Saving the Data from the Leveloader to PC:

1. Connect the Leveloader device to a PC with a USB or RS-232 connection cable.
2. Connect the Leveloader as directed in User Guide 2, Section 9.0.
3. Select the files to save to the PC and download as shown in User Guide 2, Section 9.0.
    - Note: when downloading from a Leveloader, all logs are automatically selected.
    - It is helpful to save all files from a download event in an event-specific folder.
4. Confirm that a separate file for each well downloaded on the field log has been transferred to the PC folder.

Downloading Data from a Transducer with a PC:

This procedure will be used when downloading data from a PT in the office.

1. Open the Levelogger software.
2. Connect the PT to the computer using either an optical reader or a PC interface cable.
3. Connect to the Levelogger as directed in User Guide 1, Section 5.0.
4. Download data from the PT according to User Guide 1, Section 7.1.2.
    - Select to download *All Data*.
5. Save to a file on your PC according to User Guide 1, Section 7.1.3.
    - It is helpful to save all files from a download event in an event-specific folder.

Packaging and Sending Data for Incorporation in the Topock Transducer Database:

1. Scan the transducer download log to a PDF file and save it to your computer in the same folder as the downloaded data files.
2. Download the data from the onsite Barologger using instructions for downloading data from a PT above. Save these data in the same folder as the other downloaded data files.

- The Barologger data must be collected after all other field data have been collected.

3. Create a .zip file of the folder (right click >*Send to*> *Compressed (zipped) folder*).
4. Send the .zip file via email to the current database manager and transducer data lead(s).
   - The Field Coordinator or Project Manager can supply these contacts if needed.

TRANSDUCER TROUBLESHOOTING:

Occasionally, a PT will fail to connect to the Leveloader device in the field or show a data corrupt error message. Follow these steps to troubleshoot the problem:

1. Remove the PT from the well.
2. Disconnect the PT from the direct read cable.
3. Clean the optical "eyes" on the top of the PT.
   - Work over the tool tray or another container because the small locating pin on the cable sometimes falls out and can be lost. If the pin is lost or broken, replacements are available in the tool kit.
4. If the small "O" rings around the optical eyes look flattened out, replace them with spares from the tool kit.
5. Test for a proper connection before re-installing.
6. If the PT continues to fail to connect, clean the eyes again.
7. If the PT fails to connect after a second cleaning, attach the optical connector and attempt to connect.
8. If the PT connects with the optical connector then a defective direct-read PT cable is indicated; replace the cable.
   - Mark the direct-read PT cable with the well number and date as "bad" and discard the cable as appropriate.
9. If the PT still fails to connect, the PT has failed and will need to be replaced.
10. Mark the PT with the well number and date as "bad" and take the failed PT back to the field office and attempt to connect to the PT with the optical reader to a PC (this works sometimes to get the data). Inform the Field Coordinator and Project Manager if equipment has failed.

POINTS OF CONTACT FOR QUESTIONS CONCERNING THESE PROCEDURES:

Project Manager: Jay Piper: (702) 953-120, jay.piper@ch2m.com
Field Coordinator: Barry Collom: (541) 740-3250, barry.collom@ch2m.com

Attachments

- Performance Monitoring Program Transducer Download Log
- Compliance Monitoring Program Transducer Download Log
- Groundwater Sampling Log

PG&E Topock - PMP Monthly Transducer Download

Personnel: **Water Level Meter S/N:**

Manually Recorded Data				Transducer Data				
Well ID	**Date**	**Time**	**Water Level (ft btoc)**	**Serial Number**	**Pressure Reading**	**Battery Capacity**	**File Number (unit-file)**	**Comments/Notes**
I-3								
MW-12								
MW-20-130								
MW-20-070								
MW-20-100								
MW-21								
MW-22								
MW-23-060								
MW-23-080								
MW-25								
MW-26								
MW-27-020								
MW-27-060								
MW-27-085								
MW-27-085B								
MW-28-25								
MW-28-90								
MW-30-50								
MW-31-135								
MW-31-135B								
MW-31-060								
MW-32-35								

PG&E Topock - PMP Monthly Transducer Download

Personnel: **Water Level Meter S/N:**

Manually Recorded Data				Transducer Data				
Well ID	**Date**	**Time**	**Water Level (ft btoc)**	**Serial Number**	**Pressure Reading**	**Battery Capacity**	**File Number (unit-file)**	**Comments/Notes**
MW-33-40								
MW-33-90								
MW-33-150								
MW-33-150B								
MW-34-55								
MW-34-80								
MW-34-100								
MW-34-100B								
MW-35-060								
MW-35-135								
MW-36-020								
MW-36-040								
MW-36-050								
MW-36-070								
MW-36-090								
MW-36-100								
MW-39-040								
MW-39-050								
MW-39-060								
MW-39-070								
MW-39-080								
MW-39-100								

PG&E Topock - PMP Monthly Transducer Download

Personnel: **Water Level Meter S/N:**

Manually Recorded Data				Transducer Data				
Well ID	**Date**	**Time**	**Water Level (ft btoc)**	**Serial Number**	**Pressure Reading**	**Battery Capacity**	**File Number (unit-file)**	**Comments/Notes**
MW-42-030								
MW-42-065								
MW-43-025								
MW-43-090								
MW-44-070								
MW-44-115								
MW-44-125								
MW-45-095a								
MW-45-095aB								
MW-46-175								
MW-47-055								
MW-47-115								
MW-49-135								
MW-50-095								
MW-51								
MW-54-085								
MW-54-140								
MW-54-195								
MW-55-045								
MW-55-120								
RRB								
PT2D								

PG&E Topock - PMP Monthly Transducer Download

Personnel: **Water Level Meter S/N:**

Manually Recorded Data				Transducer Data				
Well ID	**Date**	**Time**	**Water Level (ft btoc)**	**Serial Number**	**Pressure Reading**	**Battery Capacity**	**File Number (unit-file)**	**Comments/Notes**
PT5D								
PT6D								

Notes:

1- Transducer time = Pacific Standard Time (PST).

This means all transducers are behind by 1 hour during summer months compared with the actual time.

PG&E Topock - OW/CW Transducer Download

Date: **Personnel:** **WL Readings Taken Using:**

Note: Take water levels for solinst transducers to top of well cap.

Record top of PVC waterlevel and then top of Solinst cap waterlevel for all new Solinst installations using solinst caps

Manually Recorded Data				Transducer Data							
Well ID	**Date**	**Time (PST)**	**Water Level (ft btoc)**	**Serial Number**	**Pressure Reading**	**Memory**	**Battery**	**Comments**	**New PT SN**	**Solinst Log #**	**Comments/Field Notes**
Barologger-5								Solinst			
Barologger-30								Solinst			
OW-1S								solinst			
OW-2S								Solinst			
OW-5S								Solinst			
OW-5M								Solinst			
OW-5D								Solinst			
								solinst			
								solinst			
								solinst			
								solinst			
								solinst			

Notes:

1- Transducer time = Pasific Standard Time (PST).

This means all transducers are behind by 1 hour during summer months compared with the actual time.

Project Name _____ **Sampling Event** _____

Job Number _____ **Date** _____

Sampler _____ Field Team _____ Field Conditions _____ Page _____ of _____

Well/Sample Number _____ **QC Sample ID** _____ QC Sample Time _____

Purge Start Time _____ Purge Method: _____ Ded. Pump _____

Flow Cell: Y / N Min. Purge Volume (gal)/(L) _____ Purge Rate (gpm)/(mLpm) _____ Pump Make and Model _____

Water Level	Time	Vol. Purged gallons / liters	pH	Conductivity µS/cm	Turbidity NTU	Diss. Oxygen mg/L	Temp. °C	Eh/ORP mv	Comments (See description below
Parameter Stabilization Criteria			+/- 0.1 pH units	+/- 3%	+/- 10% NTU units when >10 NTUs	+/- 0.3 mg/L	+/- 2°C	+/- 10 mV	
Did last three Parameters Stablize prior to sampling?									
Previous Field measurement (11/14/2013)									
Are measurements consistent with previous?									

Sample Time _____ Sample Location: pump tubing _____ well port _____ spigot _____ bailer _____ other _____

Comments: _____

Initial Depth to Water (ft BTOC): _____ WQ METER MAKE and SERIAL NUMBER: _____

Field measured confirmation of Well Depth (ft btoc): _____ Measure Point: Well TOC Steel Casing WATER LEVEL METER SERIAL NUMBER: _____

WD (Well Depth - from database) ft btoc _____

SWH (Standing Water Height) = WD-Initial Depth _____

D (Volume as per diameter) 2"= 0.17, 4"= 0.66, 1"=0.041 _____

One Casing Volume = D*SWH _____

Three Casing Volumes = _____

Initial DTW / Before Removal		**If Transducer**		
		Approx. 5 min After Reinstallation		Time of Removal _____
Time	Initial DTW	Time	Final DTW	Time of Reinstallation _____
Comments:				

Color: clear, grey, yellow, brown, black, cloudy, green **Odor:** none, sulphur, organic, other **Solids:** Trace, Small Qu, Med Qu, Large Qu, Particulate, Silt, Sand

Project Name _____ **Sampling Event** _____

Job Number _____ **Date** _____

Sampler _____ Field Team _____ Field Conditions _____ Page _____ of _____

Well/Sample Number _____ **QC Sample ID** _____ QC Sample Time _____

Purge Start Time _____ Purge Method: _____ Ded. Pump _____

Flow Cell: Y / N Min. Purge Volume (gal)/(L) _____ Purge Rate (gpm)/(mLpm) _____ Pump Make and Model _____

Water Level	Time	Vol. Purged gallons / liters	pH	Conductivity µS/cm	Turbidity NTU	Diss. Oxygen mg/L	Temp. °C	Eh/ORP mv	Comments (See description below
Parameter Stabilization Criteria			+/- 0.1 pH units	+/- 3%	+/- 10% NTU units when >10 NTUs	+/- 0.3 mg/L	+/- 2°C	+/- 10 mV	
Did last three Parameters Stablize prior to sampling?									
Previous Field measurement (11/14/2013)									
Are measurements consistent with previous?									

Sample Time _____ Sample Location: pump tubing _____ well port _____ spigot _____ bailer _____ other _____

Comments: _____

Initial Depth to Water (ft BTOC): _____ WQ METER MAKE and SERIAL NUMBER: _____

Field measured confirmation of Well Depth (ft btoc): _____ Measure Point: Well TOC Steel Casing WATER LEVEL METER SERIAL NUMBER: _____

WD (Well Depth - from database) ft btoc _____

SWH (Standing Water Height) = WD-Initial Depth _____

D (Volume as per diameter) 2"= 0.17, 4"= 0.66, 1"=0.041 _____

One Casing Volume = D*SWH _____

Three Casing Volumes = _____

Initial DTW / Before Removal		**If Transducer**		
		Approx. 5 min After Reinstallation		Time of Removal _____
Time	Initial DTW	Time	Final DTW	Time of Reinstallation _____
Comments:				

Color: clear, grey, yellow, brown, black, cloudy, green **Odor:** none, sulphur, organic, other **Solids:** Trace, Small Qu, Med Qu, Large Qu, Particulate, Silt, Sand

PG&E Topock - OW/CW Transducer Download

Date: **Personnel:** **WL Readings Taken Using:**

Note: Take water levels for solinst transducers to top of well cap.

Record top of PVC waterlevel and then top of Solinst cap waterlevel for all new Solinst installations using solinst caps

Manually Recorded Data				Transducer Data							
Well ID	**Date**	**Time (PST)**	**Water Level (ft btoc)**	**Serial Number**	**Pressure Reading**	**Memory**	**Battery**	**Comments**	**New PT SN**	**Solinst Log #**	**Comments/Field Notes**
Barologger-5								Solinst			
Barologger-30								Solinst			
OW-1S								solinst			
OW-2S								Solinst			
OW-5S								Solinst			
OW-5M								Solinst			
OW-5D								Solinst			
								solinst			
								solinst			
								solinst			
								solinst			
								solinst			

Notes:

1- Transducer time = Pasific Standard Time (PST).

This means all transducers are behind by 1 hour during summer months compared with the actual time.

PG&E Topock - PMP Monthly Transducer Download

Personnel: **Water Level Meter S/N:**

Manually Recorded Data				Transducer Data				
Well ID	**Date**	**Time**	**Water Level (ft btoc)**	**Serial Number**	**Pressure Reading**	**Battery Capacity**	**File Number (unit-file)**	**Comments/Notes**
I-3								
MW-12								
MW-20-130								
MW-20-070								
MW-20-100								
MW-21								
MW-22								
MW-23-060								
MW-23-080								
MW-25								
MW-26								
MW-27-020								
MW-27-060								
MW-27-085								
MW-27-085B								
MW-28-25								
MW-28-90								
MW-30-50								
MW-31-135								
MW-31-135B								
MW-31-060								
MW-32-35								

PG&E Topock - PMP Monthly Transducer Download

Personnel: **Water Level Meter S/N:**

Manually Recorded Data				Transducer Data				
Well ID	**Date**	**Time**	**Water Level (ft btoc)**	**Serial Number**	**Pressure Reading**	**Battery Capacity**	**File Number (unit-file)**	**Comments/Notes**
MW-33-40								
MW-33-90								
MW-33-150								
MW-33-150B								
MW-34-55								
MW-34-80								
MW-34-100								
MW-34-100B								
MW-35-060								
MW-35-135								
MW-36-020								
MW-36-040								
MW-36-050								
MW-36-070								
MW-36-090								
MW-36-100								
MW-39-040								
MW-39-050								
MW-39-060								
MW-39-070								
MW-39-080								
MW-39-100								

PG&E Topock - PMP Monthly Transducer Download

Personnel: **Water Level Meter S/N:**

Manually Recorded Data				Transducer Data				
Well ID	**Date**	**Time**	**Water Level (ft btoc)**	**Serial Number**	**Pressure Reading**	**Battery Capacity**	**File Number (unit-file)**	**Comments/Notes**
MW-42-030								
MW-42-065								
MW-43-025								
MW-43-090								
MW-44-070								
MW-44-115								
MW-44-125								
MW-45-095a								
MW-45-095aB								
MW-46-175								
MW-47-055								
MW-47-115								
MW-49-135								
MW-50-095								
MW-51								
MW-54-085								
MW-54-140								
MW-54-195								
MW-55-045								
MW-55-120								
RRB								
PT2D								

PG&E Topock - PMP Monthly Transducer Download

Personnel: **Water Level Meter S/N:**

Manually Recorded Data				Transducer Data				
Well ID	**Date**	**Time**	**Water Level (ft btoc)**	**Serial Number**	**Pressure Reading**	**Battery Capacity**	**File Number (unit-file)**	**Comments/Notes**
PT5D								
PT6D								

Notes:

1- Transducer time = Pacific Standard Time (PST).

This means all transducers are behind by 1 hour during summer months compared with the actual time.

SOP-C2

Pressure Transducer Upload to Topock Database
Standard Operating Procedures for PG&E Topock Program

This standard operating procedure (SOP) details field instructions for uploading pressure transducer (PT) data collected using Solinst Levelogger PTs to the Pacific Gas and Electric Company (PG&E) Topock site database.

DATA TRANSFER, COMPENSATION, AND UPLOADING:

Data files are transferred from the field in a Solinst proprietary format (.lev or .xle) or in a comma-delimited (.csv) file. The .xle files must be opened using the Solinst Levelogger software version 4.0 or newer versions—older versions of the Solinst Levelogger software will not recognize the .xle formats. Lev files are compatible with all available versions. A Barologger file (.lev format) will also be included to barometrically compensate the transducer data files. The .lev and .xle files are compensated using the Solinst software and the .csv files are compensated in the Topock Transducer_loading database.

.lev and .xle Files:

1. Open the Solinst Levelogger program and import the Barologger file by clicking the *Open* icon on the *Data Control* tab and double-clicking on the Barologger data file which, for example, is named as follows:

   1024290_BAROLOGGER_5MIN_2014_04_01_.lev

   where:

   – The transducer serial number is 1024290.
   – The pressure head levels in feet were collected at 5-minute intervals.
   – The last measurement was taken on April 1, 2014.

2. Import the .xle or .lev transducer data file by clicking the *Open* icon on the *Data Control* tab and double-clicking on the data file. The transducer data files are named, for example, as follows:

   2005344_MW-36-50.xle

   where:

   – The transducer serial number is 2005344.
   – The well name MW-36-50.

   Note: The header information (listing information including the location name and PT settings) will appear on the left of the imported file. The serial number and location should match what is in the filename.

3. Go to the *Data Compensation* tab and click through the following three steps:

   a. Select the Levelogger file(s) to compensate by marking the checkbox next to the file name.

b. Make sure "Barometric Compensation" has a checkmark.

c. Select the Barologger file by highlighting the filename.

4. Click *Finish* to compensate. The compensated transducer file will be saved in the same folder as the transducer data files with "Compensated" at the end of the original filename, as in the following example:

   2005344_MW-36-50Compensated.xle

   Note: Compensation cannot be completed if the transducer data file's date and time is not within 3 hours of the Barologger file's date and time. Some files may need to compensated with multiple Barologger files or, if the transducer data were downloaded after the Barologger data, the measurements taken after the Barologger's last date/time field should not be uploaded into the database.

5. A dialog box will open when compensation is complete. Click *Finish and Open*.

6. Export the compensated transducer data file as a .csv file by clicking the export button on the *Data Control* tab and selecting data; save the files in the same directory using the same name as the compensated files:

   2005344_MW-36-50Compensated.csv

7. Repeat process for next transducer file.

   Note: Multiple transducer data files can be compensated at the same time by repeating the importing step before going to the data compensation step; however, the compensated files will not automatically open. The compensated files will have to be imported into the Solinst Levelogger software and then exported into a .csv file one at a time.

8. Once all of the transducer data files have been converted to .csv files, the files can be viewed from File Explorer, which will sort the files in alpha-numeric order. The files should then be imported into the database in this order to ensure all files are imported and to assist in making sure there are no duplicates, misnaming, missed files, etc.

9. Open the first file in a text editor or Microsoft Excel. The first dozen or so lines are header lines that should be noted. The header lines identify the transducer serial number and location (should be the well or *LocID*) Double check the same *LocID* exists in the file name.

10. Select all the numeric data (excluding header lines) and copy to the clipboard.

11. Open the Topock Transducer_loading frontend database. The Transducer Control Form *(frmTransducerCalibrationSummary)* should automatically open. Click *View Temp Table for LEV files* (should be empty), select the entire row, and paste the data.

12. Enter the following information onto the Transducer Control Form:

    - Select the *LocID* for the transducer from dropdown menu.
    - Enter the filename of the .csv file to be imported.
    - Enter your name or initials.

    Note: This information, as well as the date of loading and last date-time of the .csv file, will be stored in the *LoadingInfo* field. If questions or problems arise following upload, it

is the *LoadingInfo* field that can be used to purge bad data or apply corrections if, for example, the data are inadvertently uploaded with the wrong *LocID*.

13. Enter any comments or descriptions regarding the upload (optional).
14. With the data in *tblPT_Temp* and the fields filled out in the *Data Upload* section, press the *Upload Lev Transducer Data*. This will transfer the data from the temporary table to the table tblPT while appending *LocID* and *LoadingInfo*.
15. As the upload process continues, a prompt to confirm the appending of records to *tblPT* will appear. Select *Yes* unless a mistake has been made (this may be the only chance to stop the upload). If some of the records already exist in *tblPT* (that is, were uploaded during a previous upload session), a second prompt box stating that some records will not be uploaded due to primary key violations (the database will not let records with duplicate LocID, Date & Time be uploaded to tblPT). If it makes sense that records are duplicates, proceed with the upload to append only new data to the database.
16. Repeat process for next well Levelogger file.

.csv Files:

When .csv files are to be loaded into the database barometric compensation is performed within the database rather than using the Solinst Levelogger program. The procedures below describe this process.

1. Open the Solinst Levelogger program, Import the Barologger file by clicking the *Open* icon on the *Data Control* tab and double clicking on the Barologger data file which is named as follows:

   1024290_BAROLOGGER_5MIN_2014_04_01_.lev

   where:
   - The serial number is 1024290.
   - The levels were collected in 5-minute intervals.
   - The last measurement was taken on April 1, 2014.
2. Export the Barologger file as a .csv file by clicking the export button on the *Data Control* tab and selecting data; save the file in the same directory using the same name as the Barologger file:

   1024290_BAROLOGGER_5MIN_2014_04_01_.csv
3. Open the Barologger .csv file in a text editor or in Microsoft Excel. Select all the numeric data (excluding header lines) and copy to the clipboard.
4. Open the Topock Transducer_loading frontend database. The Transducer Control Form *(frmTransducerCalibrationSummary)* should automatically open. Open table *ttblPT_Barologger*, select a new row, and paste the data.
5. If some of the records already exist in *ttblPT_Barologger* (that is, were uploaded during a previous upload session), a prompt box will appear stating that some records will not be uploaded due to primary key violations (the database will not let records with duplicate *Date* & *Time* be uploaded to *ttblPT_Barologger*). If it makes sense that records are duplicates, proceed with the upload appending only new data records by pressing *OK*. A

second prompt box will open asking if you want to suppress further error messages, click *Yes*.

6. Open the transducer .csv file in a text editor or Microsoft Excel. Select all the numeric data (excluding header lines) and copy to the clipboard.
7. Empty the table *ttblPT_Transducer_YSI* by running the query *qryManualCompensation01_YSI,* open table *ttblPT_Transducer_YSI,* select the entire row, and paste the data.
8. Compensate the transducer file and append the compensated data to the *tblPT_Temp* table by running the query *qryManualCompensation02_append_YSI*. A prompt to confirm the appending of records will appear. Select *Yes*. A second prompt will confirm the appending and have the number of rows appended. This number should match the number of records in *ttblPT_Transducer_YSI.* If the numbers do not match, check that the time is in 5-minute intervals and that the date time records in the Barologger table extend as far as the transducer records.
9. Adjust for daylight savings as appropriate by running the query *qupdLevTime*.
10. Enter the following information onto the Transducer Control Form:
    - Select the *LocID* for the transducer from the drop-down menu.
    - Enter the filename of the .csv file to be imported.
    - Enter your name or initials.

    Note: This information, as well as the date of loading and last date-time of the .csv file, will be stored in the *LoadingInfo* field. If questions or problems arise following upload, it is the *LoadingInfo* field that can be used to purge bad data or apply corrections if, for example, the data are inadvertently uploaded with the wrong *LocID***.**

    - Enter any comments or descriptions regarding the upload (optional).
11. With the data in *tblPT_Temp* and the fields filled out in the *Data Upload* section, press the *Upload Lev Transducer Data*. This will transfer the data from the temporary table to the table *tblPT* while appending *LocID* and *LoadingInfo*.
12. As the upload process continues, a prompt to confirm the appending of records to *tblPT* will appear. Select *Yes* unless a mistake has been made (this may be the only chance to stop the upload). If some of the records already exist in *tblPT* (that is, were uploaded during a previous upload session), a second prompt box stating that some records will not be uploaded due to primary key violations (the database will not let records with duplicate LocID, Date & Time be uploaded to tblPT). If it makes sense that records are duplicates, proceed with the upload to append only new data to the database.
13. Repeat process for next well .csv file.

POINTS OF CONTACT FOR QUESTIONS CONCERNING THESE PROCEDURES:

Project Manager: Jay Piper: (702) 953-120, jay.piper@ch2m.com
Database Manager: Sarah Mader (510) 327-2275, sarah.mader@e2.com

Standard Operating Procedure – Laboratory
PG&E Topock Program

Title: Hexavalent Chromium Analysis by Hach Method 1560
Number: SOP-L01_Rev4
Revision Date: 10/13/2015

Scope

Standard Operating Procedure (SOP) for the analysis of hexavalent chromium (Cr^{+6}).

Equipment and Supplies

- Safety glasses
- Latex gloves
- Hach DR 4000V spectrophotometer or equivalent.
- Vacuum filter apparatus: 47 mm magnetic filter funnels, 1,000 mL Erlenmeyer flask, and vacuum pump. Use a 0.45 µm, 47 mm diameter filter membrane.
- 0.45 µm filter disc fitted to a disposable 50 mL syringe (syringe filter).
- pH meter.
- Reaction vessel and cap or means of sealing the reaction vessel (Hach sample cell, 50 mL beaker, vial capable of holding 30 mL and parafilm if the vessel doesn't have a cap).
- 1 packet of ChromaVer® 3 Reagent per sample.
- 2.5 mg/L hexavalent chromium (Cr^{+6}) (working) standard.

Procedure

1. Collect the sample(s) following the appropriate SOP (see list below). Samples should be analyzed as soon as possible (within 24 hours). **Note: all samples must be filtered**.
    - SOP-A1 – Purging and Sampling of Groundwater Monitoring Wells, Well-Volume Method
    - SOP-A2 – Purging and Sampling of 1-inch-diameter Groundwater Monitoring Wells, Modified Well-Volume Method
    - SOP-A3 – Purging and Sampling of Active and Inactive Water Supply Wells
    - SOP-A4 – Depth-Specific Surface Water Sampling
    - SOP-A5 – Groundwater Sampling from Sonic Drilling Boreholes
    - SOP-A14 – Pore Water Sampling
    - SOP-A18 – Purging and Sampling of Groundwater Monitoring Wells Minimal Drawdown Method

- SOP-A19 – Sampling of Groundwater Monitoring Wells HydraSleeve No Purge Method
- Remedy-SOP-01 – Process Water Sampling

2. Filtering can be performed using an inline filter at the time of sampling (see SOP–A6, Sample Field Filtration and Preservation for Metals Analyses) or in the laboratory by vacuum filter:

   - Set up the vacuum filter apparatus.
   - Filter ~100 mL of sample.

3. Measure the pH of the raw sample (**Record the results in the Cr^{+6} bench log book**).

4. Verify the spectrophotometer is set for **Hexavalent Chromium (Cr^{+6})** (Hach DR/4000V program **1560)** and verify all reagents are for 25 mL sample size (or adjust accordingly).

5. Transfer 25 mL of filtered sample into a reaction vessel (sample cell, beaker, etc.)

6. Add one packet of ChromaVer® 3 Reagent to the sample.

7. Invert sample 4–5 times or swirl the sample until powdered reagent is dissolved.

8. Start timer (8 mins.).

9. Run a blank: Use a 25 mL aliquot of filtered sample to "zero" the spectrophotometer.

   - Transfer 25 mL of raw filtered sample into the pour-thru-cell funnel.
   - Allow the meter to stabilize and press the Zero button.

10. After 8 minute timer, pour the sample with the reagent added into a syringe filter to remove the excess reagent powder. Transfer the sample into the pour-thru-cell funnel (sample port of the Hach DR/4000V).

11. Record the instrument reading in the Cr^{+6} bench log book.

12. If the result is out of range for the spectrophotometer, reanalyze the sample using a dilution.

    Note: if a dilution is required, the spectrophotometer should be zeroed using sample from the same dilution.

    Common dilutions:

    - 1:2 dilution: 25 mL of sample are diluted with 25 mL of deionized (DI) water; multiply the instrument reading (result) by 2 for the adjusted value.

      Example: instrument reading is 0.304
      x 2
      = .608 mg/L (final result)

- 1:5 dilution: 10 mL of sample are diluted with 40 mL of DI water; multiply the instrument reading (result) by 5 for the adjusted value.

  Example: instrument reading is 0.304
  x 5
  = 1.52 mg/L (final result)

- 1:10 dilution: 10 mL of sample are diluted with 90 mL of DI water; multiply the instrument reading (result) by 10 for the adjusted value.
- 1:20 dilution: 5 mL of sample are diluted with 95 mL of DI water; multiply the instrument reading (result) by 20 for the adjusted value.

Quality Control (QC)

- With the first analysis of hexavalent chromium each shift, **analyze a CCV** (Continuing Calibration Verification) standard as a **Quality Control** check:
  - Carefully measure 24 mL of DI water into a reaction vessel (sample cell, beaker, etc.).
  - Add 1 mL of 2.5 mg/L hexavalent chromium (Cr^{+6}) standard.
  - Add the hexavalent chromium reagent pillow at the same time as your samples. (ChromaVer® 3 Reagent).
  - Invert the CCV sample 4–5 times, or swirl the sample, until powdered reagent is dissolved.
  - Use the same 8 minute timer for CCV and field samples. **Note:** The blank for the CCV should be DI water.
  - **Record the CCV results in the Cr^{+6} bench log book.** If the instrument reading is not between 0.075 mg/L and 0.125 mg/L, re-prepare the standard and reanalyze.
- Periodic **Matrix Spikes (MSs)** should be analyzed. Any time a sample result appears anomalous, consider analyzing an MS of that sample.
  - Determine what dilution if any is required for the matrix spike (note: you will be adding 0.1 mg/L to the sample concentration [the instrument reading]).
  - Carefully measure 24 mL of filtered sample (diluted if required) into a reaction vessel (sample cell, beaker, etc.)
  - Add 1 mL of 2.5 mg/L hexavalent chromium (Cr^{+6}) standard to the 24 mL of filtered sample (this solution is called the MS)**.**
  - Add ChromaVer® 3 Reagent to the MS.
  - Invert sample 4 – 5 times – or swirl the sample; until powdered reagent is dissolved.
  - Start timer (8 min)
  - Use a 25 mL aliquot of filtered sample to Zero the Spectrometer. (Blank)
    - Transfer 25 mL of raw filtered sample into the pour-thru-cell funnel.
    - Allow the meter to stabilize and press the Zero button.

- After 8 minute timer, pour the sample into a syringe filter to remove the excess reagent powder. Transfer the sample into the pour-thru-cell funnel (sample port of the Hach DR/4000V).
- Record the instrument reading in the Cr^{+6} bench log book.
- Check the recovery of the MS:

  Example: Matrix Spike (0.117 mg/L) - Sample (0.006 mg/L) = 0.111 mg/L

  Concentration of Spike Standard = 0.100 mg/L

  % recovery is = 0.111/0.100 = 111%

  MS % recovery must be between 75 – 125% or you will need to reanalyze.

- If the CCV or MS are still not between 0.075 mg/L and 0.125 mg/L after reanalyses, call the Project Chemist (Shawn Duffy) at 530-229-3303.

Known Interferences

- Iron may interfere at levels above 1 mg/L.
- Highly buffered samples or extreme sample pH may exceed the buffering capacity of the reagents.

Standard Operating Procedure – Laboratory
PG&E Topock Program

Title: Ferrous Iron Analysis by Hach Method 8146
Number: SOP-L02_Rev03
Revision Date: 10/13/2015

Scope

Standard operating procedure (SOP) for analysis of ferrous iron (Fe^{+2}). The practical range of the method is 0.02 mg/L to 3 mg/L.

Equipment and Supplies

- Safety glasses
- Latex gloves
- Hach DR 4000V spectrophotometer or equivalent.
- pH meter.
- Reaction vessel and cap or means of sealing the reaction vessel (Hach sample cell, 50 mL beaker, vial capable of holding 30 mL and parafilm if the vessel doesn't have a cap).
- 1 packet of Ferrous Iron Reagent per sample.
- 0.45 µm filter disc fitted to a disposable 50 mL syringe (syringe filter).

Procedure

1. Collect the sample(s) following the appropriate SOP (see list below). Ferrous iron samples should be analyzed as soon as possible (within 6 hours).
    - SOP-A1 – Purging and Sampling of Groundwater Monitoring Wells, Well-Volume Method
    - SOP-A2 – Purging and Sampling of 1-inch-diameter Groundwater Monitoring Wells, Modified Well-Volume Method
    - SOP-A3 – Purging and Sampling of Active and Inactive Water Supply Wells
    - SOP-A4 – Depth-Specific Surface Water Sampling
    - SOP-A5 – Groundwater Sampling from Sonic Drilling Boreholes
    - SOP-A14 – Pore Water Sampling
    - SOP-A18 – Purging and Sampling of Groundwater Monitoring Wells Minimal Drawdown Method
    - SOP-A19 – Sampling of Groundwater Monitoring Wells HydraSleeve No Purge Method
    - Remedy-SOP-01 – Process Water Sampling

2. Measure the pH of the raw sample. (Record the results in the Fe+2 bench log book.)
3. Verify the spectrophotometer is set for Ferrous Iron (Hach DR/4000V, program 2150) and verify all reagents are for 25 mL sample size (or adjust accordingly).
4. Transfer 25 mL of the sample into a reaction vessel (sample cell, beaker, etc.).
5. Add one packet of Ferrous Iron Reagent.
6. Invert sample 4–5 times or swirl the sample until powdered reagent is dissolved.
7. Start timer (3 mins.).
8. Run a blank: Use a syringe filter to filter 25 mL of the raw sample and use to "zero" the spectrophotometer.
   - Transfer 25 mL of raw filtered sample into the pour-thru-cell funnel.
   - Allow the meter to stabilize and press the Zero button.
9. After 3 minute timer, use a syringe filter to filter the sample with the reagent added and transfer the sample into the pour-thru-cell funnel (the sample port of the Hach DR/4000V).
10. Record the instrument reading in the Fe+2 bench log book.
11. If the result is out of range for the spectrophotometer, reanalyze the sample using a dilution.

    Note: if a dilution is required, the spectrophotometer should be zeroed using sample from the same dilution.

    If it's determined in step 11 that a dilution is required, select one of the common dilutions listed below and re-analyze (step 4 thru step 11) using the selected dilution (remember to multiply the instrument reading by the dilution factor as listed below).

    - 1:2 dilution: 25 mL of sample are diluted with 25 mL of deionized (DI) water; multiply the instrument reading (result) by 2 for the adjusted value.

      Example: instrument reading is 0.304
      x 2
      = .608 mg/L (final result)

    - 1:5 dilution: 10 mL of sample are diluted with 40 mL of DI water; multiply the instrument reading (result) by 5 for the adjusted value.

      Example: instrument reading is 0.304
      x 5
      = 1.52 mg/L (final result)

    - 1:10 dilution: 10 mL of sample are diluted with 90 mL of DI water; multiply the instrument reading (result) by 10 for the adjusted value.
    - 1:20 dilution: 5 mL of sample are diluted with 95 mL of DI water; multiply the instrument reading (result) by 20 for the adjusted value.

Standard Operating Procedure – Laboratory
PG&E Topock Program

Title: Total Chromium Analysis by Hach Method 8024
Number: SOP-L03_Rev02
Revision Date: 10/13/2015

Scope

Standard operating procedure (SOP) for analysis of total chromium (Cr^{+3}).

Equipment and Supplies

- Safety glasses
- Latex gloves
- Hach DR 4000V spectrophotometer or equivalent.
- Vacuum filter apparatus: 47 mm magnetic filter funnels, 1,000 mL Erlenmeyer flask, and vacuum pump. Use a 0.45 µm, 47 mm diameter filter membrane.
- 0.45 µm filter disc fitted to a disposable 50 mL syringe (syringe filter).
- pH meter.
- Hach sample cell or vial capable of holding 30 mL.
- 1 packet of ChromaVer® 3 Reagent per sample.
- 1 packet of Chromium 1 Reagent per sample.
- 1 packet of Chromium 2 Reagent per sample.
- 1 packet of Acid Reagent per sample.
- 2.5 mg/L Chromium, Total (Cr^{+3}) (working) standard.
- Hot plate and water bath or heating block.
- Ice bath (baking pan with water and ice - approximately 1" deep)

Procedure

1. Collect the sample(s) following the appropriate SOP (see list below). The samples should be analyzed within 24 hours if possible. Note: all samples must be filtered.
    - SOP-A1 – Purging and Sampling of Groundwater Monitoring Wells, Well-Volume Method
    - SOP-A2 – Purging and Sampling of 1-inch-diameter Groundwater Monitoring Wells, Modified Well-Volume Method
    - SOP-A3 – Purging and Sampling of Active and Inactive Water Supply Wells

- SOP-A4 – Depth-Specific Surface Water Sampling
- SOP-A5 – Groundwater Sampling from Sonic Drilling Boreholes
- SOP-A14 – Pore Water Sampling
- SOP-A18 – Purging and Sampling of Groundwater Monitoring Wells Minimal Drawdown Method
- SOP-A19 – Sampling of Groundwater Monitoring Wells HydraSleeve No Purge Method
- Remedy-SOP-01 – Process Water Sampling

2. Filtering can be performed using an inline filter at the time of sampling (see SOP–A6, Sample Field Filtration and Preservation for Metals Analyses) or in the laboratory by vacuum filter:
   - Set up the vacuum filter apparatus.
   - Filter ~100 mL of sample.
3. Turn on the hot plate and set to 390°F.
   - Make sure the water bath is ~ ½ inch below the top.
4. Measure the pH of the raw sample. (**Record the results in the Cr^{+3} bench log book.**)
5. Verify the spectrophotometer is set for **Chromium, Total (Cr^{+3})** (Hach DR/4000V program **1580)** and verify all reagents are for 25 mL sample size (or adjust accordingly).
6. Transfer 25 mL of filtered sample into a sample cell or vial.
7. Add Chromium 1 Reagent to each of the sample cells/vials.
8. Invert samples 4–5 times or swirl the sample until powdered reagent is dissolved.
9. Place the samples into the sample rack in the hot water bath (water should be boiling) and start the 5-minute "Heat" timer.
10. After 5 minutes, remove the sample cells/vials and cool to room temperature in an ice bath.
11. Add Chromium 2 Reagent to each of the sample cells/vials.
12. Invert samples 4–5 times or swirl the sample until powdered reagent is dissolved.
13. Add Acid Reagent to each of the sample cells.
14. Invert samples 4–5 times or swirl the sample until powdered reagent is dissolved.
15. Add ChromaVer® 3 Reagent to each of the sample cells/vials; invert samples 4–5 times or swirl the sample until powdered reagent is dissolved.
16. Start the 5-min. "wait" timer.
17. Run a blank: Use a 25 mL aliquot of filtered sample to "zero" the spectrophotometer:
    - Transfer 25 mL of raw filtered sample into the pour-thru-cell funnel.
    - Allow the meter to stabilize and press the Zero button.

18. After 5 minute "wait" timer, pour the sample with the reagent added into a syringe filter to remove the excess reagent powder. Transfer the sample into the pour-thru-cell funnel (sample port of the Hach DR/4000V).
19. Record the instrument reading in the Cr^{+3} bench log book.
20. If the result is out of range for the spectrophotometer, reanalyze the sample using a dilution.

    Note: if a dilution is required, the Spectrometer should be zeroed using sample from the same dilution.

    Common dilutions:

    - 1:2 dilution: 25 mL of sample are diluted with 25 mL of deionized (DI) water; multiply the instrument reading (result) by 2 for the adjusted value.

      Example: instrument reading is 0.304
      x 2
      = .608 mg/L (final result)

    - 1:5 dilution: 10 mL of sample are diluted with 40 mL of DI water; multiply the instrument reading (result) by 5 for the adjusted value.

      Example: instrument reading is 0.304
      x 5
      = 1.52 mg/L (final result)

    - 1:10 dilution: 10 mL of sample are diluted with 90 mL of DI water; multiply the instrument reading (result) by 10 for the adjusted value.
    - 1:20 dilution: 5 mL of sample are diluted with 95 mL of DI water; multiply the instrument reading (result) by 20 for the adjusted value.

Quality Control (QC)

- With the first analysis of Chromium, Total each shift, **analyze a CCV** (Continuing Calibration Verification) standard as a **Quality Control** check:
  - Carefully measure 24 mL of DI water into a reaction vessel (sample cell).
  - Add 1 mL of 2.5 mg/L Chromium, Total (Cr^{+3}) standard.
  - Add the Chromium 1 Reagent at the same time as your samples.
  - Follow the remaining procedures as listed above for the samples (hot water bath, cool with ice, add additional reagents, filter, and analyze). **Note:** The Blank for the CCV should be DI water.
  - **Record the CCV results in the Cr^{+3} bench log book.** If the instrument reading is not between 0.075 mg/L and 0.125 mg/L, re-prepare the standard and reanalyze.
- Periodic **Matrix Spikes (MSs)** should be analyzed. Any time a sample result appears anomalous, consider analyzing a matrix spike of that sample.
  - Determine what dilution, if any, is required for the matrix spike (note: you will be adding 0.1 mg/L to the sample concentration [the instrument reading]).

- Carefully measure 24 mL of filtered sample (diluted if required) into a reaction vessel (sample cell/vial).
- Add 1 mL of 2.5 mg/L Chromium, Total (Cr^{+3}) standard to the 24 mL of filtered sample (this solution is called the MS).
- Add the Chromium 1 Reagent at the same time as your samples.
- Follow the remaining procedures as listed above for the samples (hot water bath, cool with ice, add additional reagents, filter and analyze).
- Run a blank: Use a 25 mL aliquot of filtered sample to zero the spectrophotometer:
  - Transfer 25 mL of raw filtered sample into the pour-thru-cell funnel.
  - Allow the meter to stabilize and press the Zero button.
- After the 5-minute "wait" timer, pour the sample into a syringe filter to remove the excess reagent powder. Transfer the sample into the pour-thru-cell funnel (sample port of the Hach DR/4000V).
- Record the instrument reading in the **Cr^{+3}** bench log book.
- Check the recovery of the MS.

  Example: Matrix Spike (0.117 mg/L) - Sample (0.006 mg/L) = 0.111 mg/L

  Concentration of Spike Standard is = 0.100 mg/L

  % recovery is = 0.111/0.100 = 111%

  MS % recovery must be between 75 – 125% or you will need to reanalyze.
- If the CCV or MS are still not between 0.075 mg/L and 0.125 mg/L after reanalyses, call the Project Chemist (Shawn Duffy) at 530-229-3303.

Known Interferences

- High concentrations of organic material may inhibit complete oxidation of trivalent chromium.
- Highly buffered samples or extreme sample pH may exceed the buffering capacity of the reagents.

Standard Operating Procedure – Laboratory
PG&E Topock Program

Title: Conductivity Analysis by Hach Method 8160
Number: SOP-L04_Rev01
Revision Date: 10/13/2015

Scope

Standard operating procedure (SOP) for analysis of conductivity. The practical range of the method is 0.01 µS/cm to 200 mS/cm (0.01 to 200,000 µS/cm).

Conductivity is the measure of the ability of a solution to conduct an electric current and is dependent on temperature. The conductivity can then be multiplied by an empirically derived factor to calculate the approximate amount of total dissolved solids (TDS) in the sample.

Equipment and Supplies

- Safety glasses
- Latex gloves
- Hach sensION 378 Multiparameter Meter or equivalent
- Hach Quick Reference Guide booklet for the sensION156 and sensION378 Multiparameter Meters (54650-23)
- Conductivity Standards – 1000 µS/cm (Hach 14400-42) (Ensure that the conductivity standard solution is not expired.)
- Deionized (DI) water
- 100 mL beakers
- Calibration sheet
- Kimwipes
- Magnetic stir plate and magnetic stir bar.

Procedure

1. Collect the sample(s) following the appropriate SOP (see list below). Samples should be analyzed as soon as possible (within 24 hours).
    - SOP-A1 – Purging and Sampling of Groundwater Monitoring Wells, Well-Volume Method
    - SOP-A2 – Purging and Sampling of 1-inch-diameter Groundwater Monitoring Wells, Modified Well-Volume Method
    - SOP-A3 – Purging and Sampling of Active and Inactive Water Supply Wells
    - SOP-A4 – Depth-Specific Surface Water Sampling

- SOP-A5 – Groundwater Sampling from Sonic Drilling Boreholes
- SOP-A14 – Pore Water Sampling
- SOP-A18 – Purging and Sampling of Groundwater Monitoring Wells Minimal Drawdown Method
- SOP-A19 – Sampling of Groundwater Monitoring Wells HydraSleeve No Purge Method
- Remedy-SOP-01 – Process Water Sampling

2. Verify the meter is in COND mode.
3. Rinse the conductivity probe with DI water and shake it to remove excess water. (Check to make sure there are no bubbles in probe cell.) The meter should read below 10 µS/cm.
4. Confirm the calibration by checking the conductivity of the 1000 µS/cm standard at the beginning of each shift. (If a sample's conductivity is expected or measured between 10,000 µS/cm and 20,000 µS/cm, use a standard between 10,000 to 18,000 µS/cm to also verify the calibration. Likewise, if a sample's conductivity is, or expected to be, greater than 20,000 µS/cm, use a standard between 20,000 and 45,000 µS/cm to verify the calibration. Follow the steps below substituting the higher concentration standards.)
   a. Pour ~50 mL of 1000 µS/cm standard in a 100 mL beaker.
   b. Add a clean stir rod to the standard.
   c. Start the stir plate at a moderate rate (fast enough to stir the sample, but not fast enough to cause a vortex to form).
   d. Allow the meter to stabilize.
   e. After the reading stabilizes, record value on the calibration sheet.
5. If not within 10% of the true value (e.g., 900 to 1,100 µS/cm for the 1,000 µS/cm standard), recalibrate the meter following the steps on page 5 of the Hach **Quick Reference Guide** booklet for the **sensION156** and **sensION378** Multiparameter Meters (54650-23).

   Be sure to clean the probe cell first. If DI water does not clean the cell, try cleaning the cell as follows: Wash with warm water and laboratory soap and rinse with copious amounts of DI water before use. Alternatively a 3% HCl acid solution may be used. Solvents such as acetone or ethanol should only be used as a last resort, and the cell should not be immersed for longer than 5 minutes. Always completely rinse with DI water. Re-calibrate after these cleanings.
6. If the standard results are within 10% of the true value (e.g., 900 to 1,100 µS/cm for the 1,000 µS/cm standard), continue with analysis for each of the samples. (Ensure the temperature of the sample is between 20°C and 25°C.)
7. Pour a fresh portion (~ 50-mL) of the sample into a clean 100 mL beaker.
8. Add a clean stir rod to the sample.

9. Start the stir plate at a moderate rate (fast enough to stir the sample, but not fast enough to cause a vortex to form).
10. Place probe in sample.
11. Allow the meter to stabilize.
12. Record the conductivity result on the Conductivity bench sheet and include the units. (Note: The meter automatically changes the units from µS/cm to mS/cm above 1,999 µS/cm.) The result is automatically corrected to the reference temperature of 20°C.
13. Rinse the probe and cell with DI water after each sample.

Calculations

- To convert from mS/cm to µS/cm multiply the result by 1000.
- TDS, mg/L (ppm) ≅ Conductivity (µS/cm) * 0.63.

References

American Public Health Association (APHA), American Water Works Association (AWWA), and Water Environment Federation (WEF). 1998. *Standard Methods for the Examination of Water and Wastewater.* 20th Edition. Method 2510.

Hach Company. 2003. *Water Analysis Handbook*. 4th Edition. Method 8160.

Standard Operating Procedure – Laboratory
PG&E Topock Program

Title: Spike Preparation
Number: SOP-L08_Rev01
Revision Date: 06/05/2014

Scope

Standard operating procedure (SOP) for preparing "working concentration" spike solutions for the analysis of reagent spikes (Continuing Calibration Verifications or CCVs) and sample matrix spikes (MSs).

Equipment and Supplies

- Safety glasses
- Latex gloves
- 100 mL or 1000 mL volumetric flask with cap
- 1 mL or 5 mL pipette
- Deionized (DI) water
- Glass standards bottle or 1 liter poly bottle and labels
- Chemical standard:

    a. Hexavalent Chromium: 50 mg/L hexavalent chromium standard; also see SOP-L01, Hexavalent Chromium Analysis by Hach Method 1560

    b. Total Chromium: 50 mg/L total chromium standard; also see SOP-L03, Total Chromium Analysis by Hach Method 8024

    c. Manganese: 25 mg/L manganese standard; also see SOP-L18, Manganese Analysis by Hach Method 8149

    d. Nitrate: 100 mg/L nitrate standard; also see SOP-L13, Nitrate Analysis by Hach Method 8171

    e. Sulfate: 1000 mg/L sulfate standard and 1 packet of SulfaVer® 4 Reagent; also see SOP-L14, Sulfate Analysis by Hach Method 8051

    f. Total Organic Carbon (TOC): 1000 mg/L TOC standard (potassium hydrogen phthalate [KHP]); also see SOP-L16, Total Organic Carbon Analysis by Hach Method 10129

Procedures

a. Hexavalent Chromium

1. Add ~50 mL of DI water to a 100 mL volumetric flask.
2. Add 5 mL of a 50 mg/L hexavalent chromium standard using a 1 mL pipette.
3. Bring the volume of the flask to 100 mL using DI water.

4. Cap, and mix thoroughly.
5. The resultant concentration of the standard is 2.5 mg/L. This standard solution can be used to prepare an MS and/or a CCV standard as outlined in SOP-L01, Hexavalent Chromium Analysis by Hach Method 1560.
6. Transfer the 2.5 mg/L working standard to a glass standards bottle and label.
7. Verify the concentration by following the CCV procedure as detailed in SOP-L01, Hexavalent Chromium Analysis by Hach Method 1560.

b. Total Chromium

1. Add ~50 mL of DI water to a 100 mL volumetric flask.
2. Add 5 mL of a 50 mg/L total chromium standard using a 1 mL pipette.
3. Bring the volume of the flask to 100 mL using DI water.
4. Cap, and mix thoroughly.
5. The resultant concentration of the standard is 2.5 mg/L. This standard solution can be used to prepare an MS and/or a CCV standard as outlined in SOP-L03, Total Chromium Analysis by Hach Method 8024.
6. Transfer the 2.5 mg/L working standard to a glass standards bottle and label.
7. Verify the concentration by following the CCV procedure as detailed in SOP-L03, Total Chromium Analysis by Hach Method 8024.

c. Manganese

1. Add ~25 mL of DI water to a 50 mL volumetric flask.
2. Add 2 mL of a 25 mg/L manganese standard using a 1 mL pipette.
3. Bring the volume of the flask to 50 mL using DI water.
4. Cap, and mix thoroughly.
5. The resultant concentration of the standard is 1 mg/L. This standard solution can be used to prepare an MS and/or a CCV standard as outlined in SOP-L18, Manganese Analysis by Hach Method 8149.
6. Transfer the 1 mg/L working standard to a glass standards bottle and label.
7. Verify the concentration by following the CCV procedure as detailed in SOP-L18, Manganese Analysis by Hach Method 8149.

d. Nitrate

1. Add ~50 mL of DI water to a 100 mL volumetric flask.
2. Add 25 mL of a 100 mg/L nitrate standard using a 5 mL pipette.
3. Bring the volume of the flask to 100 mL using DI water.

4. Cap, and mix thoroughly.
5. The resultant concentration of the standard is 25 mg/L. This standard solution can be used to prepare an MS and/or a CCV standard as outlined in SOP-L13, Nitrate Analysis by Hach Method 8171.
6. Transfer the 25 mg/L working standard to a glass standards bottle and label.
7. Verify the concentration by following the CCV procedure as detailed in SOP-L13, Nitrate Analysis by Hach Method 8171.

e. Sulfate

1. Add ~500 mL of DI water to a 1000 mL volumetric flask.
2. Add 70 mL of a 1000 mg/L sulfate standard using graduated cylinder.
3. Bring the volume of the flask to 1000 mL using DI water.
4. Cap, and mix thoroughly.
5. The resultant concentration of the standard is 70 mg/L. This working standard can be used at this concentration for a CCV standard as outlined in SOP-L14, Sulfate Analysis by Hach Method 8051.
6. Transfer the 70 mg/L working standard to a 1 liter poly bottle and label.
7. Verify the concentration by following the CCV procedure as detailed in SOP-L14, Sulfate Analysis by Hach Method 8051.

f. TOC

1. Add ~500 mL of DI water to a 1000 mL volumetric flask.
2. Add 10 mL of a 1000 mg/L TOC standard (KHP) using a 5 mL pipette.
3. Bring the volume of the flask to 1000 mL using DI water.
4. Cap, and mix thoroughly.
5. Transfer the 10 mg/L working standard to a glass standards bottle and label.
6. The resultant concentration of the standard is 10 mg/L. This standard solution can be used to prepare an MS and/or a CCV standard as outlined in SOP-L16, TOC Analysis.
7. Transfer the 10 mg/L working standard to a 1 liter poly bottle and label.
8. Verify the concentration by following the CCV procedure as detailed in SOP-L16, TOC Analysis by Hach Method 10129.

Standard Operating Procedure – Laboratory
PG&E Topock Program

Title: pH Measurement
Number: SOP-L09_Rev02
Revision Date: 10/13/2015

Scope

Standard operating procedure (SOP) for pH measurement.

Equipment and Supplies

- Safety glasses
- Latex gloves
- Hach sensION 378 Multiparameter Meter or equivalent

  Note: Store the pH electrode in the pH 4 or 7 buffer solution when it's not in use, or use the manufacturer's storage solution. Replace the storage solution every week.
- Hach Quick Reference Guide for sensION156 and sensION378 Multiparameter Meters (54650-23).
- pH buffer solutions for pH 4, 7 and 10. (Make sure the buffer solutions are not expired.)
- 100 mL beakers
- De-ionized (DI) water (squirt bottle)
- Calibration beakers. (Calibration beakers are provided by the instrument manufacturer and have sealable lids that allow the calibrations standards to be reused. Do not pour the calibration standards back into the original bottles. Replace the working buffer solution at least twice a week or if re-calibrating the meter is required.)
- Calibration sheet
- Kimwipes
- Magnetic stir plate and magnetic stir bar.

Procedure

1. Collect the sample(s) following the appropriate SOP (see list below). Samples should be analyzed as soon as possible (within 24 hours).
   - SOP-A1 – Purging and Sampling of Groundwater Monitoring Wells, Well-Volume Method
   - SOP-A2 – Purging and Sampling of 1-inch-diameter Groundwater Monitoring Wells, Modified Well-Volume Method

- SOP-A3 – Purging and Sampling of Active and Inactive Water Supply Wells
- SOP-A4 – Depth-Specific Surface Water Sampling
- SOP-A5 – Groundwater Sampling from Sonic Drilling Boreholes
- SOP-A14 – Pore Water Sampling
- SOP-A18 – Purging and Sampling of Groundwater Monitoring Wells Minimal Drawdown Method
- SOP-A19 – Sampling of Groundwater Monitoring Wells HydraSleeve No Purge Method
- Remedy-SOP-01 – Process Water Sampling

Notes prior to beginning calibration:

- The pH meter must be calibrated at the beginning of each day and any time the pH reading does not make sense.
- Make sure the electrode is rinsed well between samples.
- Make sure the buffers and samples are at a constant temperature before beginning the calibration or analysis procedure (pH is affected by temperature).

2. To start the calibration pour fresh portions (~ 50-mL) of the pH 4, 7 and 10 buffers into the calibration beakers (buffers should be replaced at least twice per week). Rinse each calibration beaker 3 times with small portions of buffer before filling the beaker with the portion to be analyzed.
3. Add a clean stir rod to each standard.
4. Start the stir plate at a moderate rate (fast enough to stir the sample, but not fast enough to cause a vortex to form).
5. Turn the pH meter on.
6. Make sure the meter is in pH mode.
7. Rinse the electrode with DI water.
8. Follow the calibration procedures on page 3 in the Hach **Quick Reference Guide** for **sensION156** and **sensION378** Multiparameter Meters (54650-23).
    - Be careful not to hit the electrode end against the sides of the beaker.
9. If the pH probe does not recognize the pH 4 buffer within 2 – 3 minutes, re-rinse the electrode with DI water, dry with a Kimwipe and try again. If you've cleaned the probe three times and the pH meter still doesn't recognize the pH 4 buffer, call the Project Chemist (Shawn Duffy) at 530-229-3303.
10. Rinse the electrode with DI water between each buffer solution.
11. After calibrating with the pH 4, 7 and 10 buffers, record the Slope value on the calibration sheet and press Enter to accept and return to the reading mode.

12. Rinse the electrode with DI water.
13. To analyze samples, pour a fresh portion (~ 50-mL) of the sample into a clean 100 mL beaker.
14. Add a clean stir bar.
15. Start the stir plate at a moderate rate (fast enough to stir the sample, but not fast enough to cause a vortex to form).
16. Place the pH meter electrode in the sample.
17. Allow the meter to stabilize, record the pH in the appropriate bench log book.
18. If the meter does not stabilize during a pH measurement a new calibration may be needed. Rinse the electrode with DI water and re-start the calibration.

Standard Operating Procedure
PG&E Topock Program

Title: Hach Model 2100P Turbidimeter Calibration and Analysis
Number: SOP-L10 Rev02
Revision Date: 10/13/2015

Scope

Standard Operating Procedure (SOP) for the analysis of turbidity. This SOP covers the calibration and operating procedures for the Hach Model 2100P turbidimeter.

Precautions/Hazards

- Operators should not attempt the full calibration task until they have been properly trained.
- Hazards include exposure to Formazin and silicone oil (please refer to material safety data sheets [MSDSs] for all chemicals).

Equipment and Supplies List

- Safety glasses
- Latex gloves
- Kimwipes
- Oiling cloths
- Hach Model 2100P portable turbidimeter
- Model 2100P Turbidimeter Instrument and Procedure Manual (Cat. No. 46500-88)
- Carrying case
- Four AA alkaline batteries
- Sample cells with caps
- Check and calibration log
- Turbidimeter kit
- Reagents:
  - Formazin Primary Standards: Hach Part # 26594-05, StablCal® Standards, <0.1, 20, 100, 800 NTU ampoules
  - Gelex Secondary Standards: Hach Part # 24641-05
  - Silicone oil: Hach Part # 1269-36

Daily Gelex Check Procedure

1. Turn on turbidimeter and select automatic range mode. You should see "AUTO RNG" on display.
2. Thoroughly clean the outside of all three Gelex vials with Kimwipes, apply one drop of silicone oil to each vial, and wipe with oiling cloth.
    - Dirty, scratched, or damaged cells can cause inaccurate readings. Handle cells only by the top to minimize dirt, scratches and fingerprints in the light path.
    - The silicone oil is used to eliminate the effects of fine scratches in the glass cell. If the vial has any large visible scratches, notify the supervisor so a replacement Gelex set can be ordered.
    - Avoid excess coating of oil. Oil is not needed if the sample cells are properly maintained.
3. Beginning with Gelex standard 0-10 NTU, place Gelex cell into compartment so that the diamond aligns with orientation mark on the turbidimeter. Close the lid.
4. When taking a reading, place the instrument on a level, stationary surface. It should not be held in the hand during measurement.
5. Press the Read button.
6. If 9.99 or 99.9 are flashing on display, press 'Range' button to change range of meter.
7. Record the displayed value in the check and calibration log.
8. Repeat steps 2 through 5 for remaining Gelex standards.

If any of the Gelex standards are +/- 5% from assigned value, the turbidimeter must be calibrated.

Turbidimeter Calibration Procedure

For expediency you will be referred to the instrument manual (Section 3.6, pages 35-54) to perform these procedures.

1. Prepare Formazin standards, located in the turbidimeter kit (small blue tool box located in cabinet under counter below mixer), according to procedure on page 37, **Section 3.6.1.3** of **Model 2100P Turbidimeter Instrument and Procedure Manual**.
2. Cap the sample cells to prevent spillage of Formazin into the instrument.
3. Begin calibration procedure on page 42, **Section 3.6.3** of **Model 2100P Turbidimeter Instrument and Procedure Manual**.
4. After the turbidimeter has accepted the calibration, assign new values to all Gelex standards using the Daily Gelex Check Procedure above.

Sample Analysis Procedure

1. Transfer sample into a vial dedicated to turbidity measurements "cell." **Do not dilute the samples.**
    - Always use clean sample cells in good condition. Properly clean cells between measurements. Do not use a brush on the sample cell, always use Kimwipes or equivalent optical wipes to dry the cells.
    - Dirty, scratched, or damaged cells can cause inaccurate readings. Handle cells only by the top to minimize dirt, scratches and fingerprints in the light path.
2. Cap the sample cell to prevent spillage of sample into the instrument.
3. Avoid settling of sample prior to measurement. Allow samples to degas but do not allow settling of solids.
4. Thoroughly clean the outside of cell with Kimwipes, apply one drop of silicone oil if needed, and wipe with oiling cloth. Oil is not needed if the sample cells are properly maintained.
    - The silicone oil is used to eliminate the effects of fine scratches in the glass cell. If the vial has any large visible scratches, discard and use another cell.
    - Avoid excess coating of oil.
5. Place the sample cell into the compartment so that the diamond aligns with orientation mark on the turbidimeter. Close the lid.
6. Place the instrument on a level, stationary surface. It should not be held in the hand during measurement.
7. Press the Read button.
8. If 9.99 or 99.9 are flashing on display, press 'Range' button to change range of meter.
9. Record the displayed value in the bench logbook.
10. Do not leave a sample cell in the cell compartment for extended periods of time. This may compress the spring in the cell holder.
11. Always close the sample compartment lid during storage. Remove sample cell and batteries from instrument if the instrument is stored for extended time period (more than a month).

Quality Control

- QC activities that will help ensure the accuracy and precision of this method include:
    - **Using optically matched (or single) cells for Low Level Turbidity** - Precise measurements of low turbidity (< 2 NTU) samples require using a single cell for all measurements or using optically matched cells – *see Hach instruction manual Section 2.3.3 pages 22-25*.
    - **Use dedicated cells –** The use of cells dedicated to turbidity measurement is recommended.

- **Removing trapped gases** - *See Hach instruction manual Section 2.3.3 pages 22-25.* This would only be a problem for samples that exhibit foaming or where gas bubbles are observed.
- **Do not dilute the samples**.
- The calibration of the turbidimeter must be verified, using the more convenient Gelex® secondary standards, at the beginning of each day and any time the turbidity reading does not make sense. The turbidimeter must be fully calibrated using Formazin primary standards every three months as per manufacturer standards, and also whenever the daily Gelex check standards fail to meet the +/- 5% quality control (QC) criteria.

Standard Operating Procedure – Laboratory
PG&E Topock Program

Title: Nitrate Analysis by Hach Method 8171
Number: SOP-L13_Rev01
Revision Date: 10/13/2015

Scope

Standard operating procedure (SOP) for analysis of nitrate (NO_3^--N).

Equipment and Supplies

- Safety glasses
- Latex gloves
- Hach DR 4000V spectrophotometer or equivalent
- pH meter
- Reaction vessel and cap or means of sealing the reaction vessel– (Hach sample cell, 50 mL beaker, vial capable of holding 30 mL, and parafilm if the vessel doesn't have a cap)
- 1 packet of NitraVer® 5 Reagent per sample
- 25 mg/L nitrate (NO_3^--N) (working) standard
- 0.45 µm filter disc fitted to a disposable 50 mL syringe (syringe filter)
- Deionized (DI) water
- Timer

Procedure

1. For each lot of reagents, analyze a reagent blank. Transfer 25 mL of DI water into a reaction vessel and follow steps 4 through 12 below. Sample concentration may need to be adjusted based on the reagent's contribution. If the concentration is greater than 0.25 mg/L call the Project Chemist (Shawn Duffy) at 530-229-3303.
2. Collect the sample(s) following the appropriate SOP (see below). Nitrate samples should be analyzed as soon as possible (within 24 hours).
    - SOP-A1 – Purging and Sampling of Groundwater Monitoring Wells, Well-Volume Method
    - SOP-A2 – Purging and Sampling of 1-inch-diameter Groundwater Monitoring Wells, Modified Well-Volume Method
    - SOP-A3 – Purging and Sampling of Active and Inactive Water Supply Wells
    - SOP-A4 – Depth-Specific Surface Water Sampling
    - SOP-A5 – Groundwater Sampling from Sonic Drilling Boreholes

- SOP-A14 – Pore Water Sampling
- SOP-A18 – Purging and Sampling of Groundwater Monitoring Wells Minimal Drawdown Method
- SOP-A19 – Sampling of Groundwater Monitoring Wells HydraSleeve No Purge Method
- Remedy-SOP-01 – Process Water Sampling

3. Measure the pH of the raw sample. Record the results in the NO_3^--N Bench Logbook.
4. Verify the spectrophotometer is set for Nitrate (Hach DR/4000V, program 2520) and verify all reagents are for 25 mL sample size (or adjust accordingly).
5. Transfer 25 mL of the sample into a reaction vessel. (Note: the sample cell or vessel must be able to be sealed with a cap or parafilm.)
6. Add 1 packet of NitraVer® 5 Reagent.
7. Start the 1 minute timer.
8. Shake the sample for the entire 1 minute, using a 90° rotation of the wrist and back to the original position with a timing of once per second.
9. After the 1 minute shake time set the sample down and start the 5 minute reaction timer.
10. Run a blank: Use a syringe filter to filter 25 mL of the raw sample, and then use the raw sample to "zero" the spectrophotometer. Note: if the sample needs dilution, then use the same dilution water for the blank.
    - Transfer 25 mL of raw filtered sample into the pour-through-cell funnel.
    - Allow the meter to stabilize and press the Zero button.
11. After 5 minute timer, use a syringe filter to filter the sample with the reagent added and transfer the sample into the pour-through-cell funnel (the sample port of the Hach DR/4000V). Analyze within 2 minutes.
12. Record the instrument reading in the NO_3^--N Bench Logbook.
13. If the result is out of range for the spectrophotometer, reanalyze the sample using a dilution.

    Note: if a dilution is required, the spectrophotometer should be zeroed using a sample from the same dilution.

    Common dilutions:

    - 1:2 dilution: 25 mL of sample are diluted with 25 mL of DI water; multiply the instrument reading (result) by 2 for the adjusted value.

      Example: instrument reading is 3.54
      x 2
      = 7.08 mg/L (final result)

- 1:5 dilution: 10 mL of sample are diluted with 40 mL of DI water; multiply the instrument reading (result) by 5 for the adjusted value.

  Example: instrument reading is 3.54
  x 5
  = 17.7 mg/L (final result)

- 1:10 dilution: 10 mL of sample are diluted with 90 mL of DI water; multiply the instrument reading (result) by 10 for the adjusted value.
- 1:20 dilution: 5 mL of sample are diluted with 95 mL of DI water; multiply the instrument reading (result) by 20 for the adjusted value.

Quality Control (QC)

- With the first analysis of Nitrate each shift, **analyze a Continuing Calibration Verification (CCV) standard** as a **Quality Control** check:
  - Carefully measure 24 mL of DI water into a sample cell.
  - Add 1 mL of 25 mg/L Nitrate (NO_3^--N) standard.
  - Add 1 packet of NitraVer® 5 Reagent at the same time you add the reagent to your samples.
  - Follow the remaining procedures as listed above for the samples (steps 7 through 12). The Blank for the CCV should be DI water.
  - **Record the CCV results in the NO_3^--N Bench Logbook.** If the instrument reading is not between 0.75 mg/L and 1.25 mg/L re-prepare the standard and reanalyze.
- Periodic **Matrix Spikes (MSs)** should be analyzed. Any time a sample result appears anomalous, consider analyzing an MS of that sample.
  - Determine what dilution, if any, is required for the MS (Note: you will be adding 1.0 mg/L to the sample concentration [the instrument reading]). If you have difficulty determining the dilution needed, call the Project Chemist (Shawn Duffy) at 530-229-3303.
  - Carefully measure 24 mL of filtered sample (diluted if required) into a reaction vessel (sample cell/vial).
  - Add 1 mL of 25 mg/L Nitrate (NO_3^--N) standard to the 24 mL of filtered sample—this is your MS**.**
  - Add 1 packet of NitraVer® 5 Reagent at the same time you add the reagent to your samples.
  - Follow the remaining procedures as listed above for the samples (steps 7 through 12), use a 25 mL aliquot of the same dilution water for the blank (use to zero the spectrophotometer).
  - Record the instrument reading in the NO_3^--N Bench Logbook.
  - Check the recovery of the MS:

Example: Matrix Spike (3.17 mg/L) - Sample (2.06 mg/L) = 1.11 mg/L

Concentration of MS Standard = 1.00 mg/L

% recovery is = 1.11/1.00 = 111%

Note: MS % recovery must be between 75 – 125% or you will need to reanalyze.

If the CCV or MS are still not between 0.075 mg/L and 0.125 mg/L after reanalyses, call the Project Chemist (Shawn Duffy) at 530-229-3303.

Known Interferences

- Chloride concentrations above 100 mg/L will cause low results.
- Ferric iron at all levels
- Highly buffered samples or extreme sample pH may exceed the buffering capacity of the Reagents.

Standard Operating Procedure – Laboratory
PG&E Topock Program

Title: Sulfate Analysis by Hach Method 8051
Number: SOP-L14_Rev1
Revision Date: 10/13/2015

Scope

Standard operating procedure (SOP) for analysis of sulfate (SO_4^{2-}).

Equipment and Supplies

- Safety glasses
- Latex gloves
- Hach DR 4000V spectrophotometer or equivalent
- Vacuum filter apparatus: 47 mm magnetic filter funnels, 1000 mL Erlenmeyer flask, and vacuum pump. Use a 0.45 µm, 47 mm diameter filter membrane.
- pH meter
- Reaction vessel and cap (Hach sample cell)
- 1 packet of SulfaVer® 4 Reagent per sample
- 70 mg/L Sulfate (SO_4^{2-}) (working) standard
- Timer
- Deionized (DI) water

Procedure

1. For each lot of reagent, analyze a reagent blank. Transfer 25 mL of DI water into a reaction vessel and follow steps 4 through 11 below. Sample concentration may need to be adjusted based on the reagents contribution. (Do not dilute or filter this sample.)
2. Collect the sample(s) following the appropriate SOP (see below). Sulfate samples should be analyzed within 24 hours. If the sample is held for more than 24 hours, store at 4°C and allow the sample to equilibrate to room temperature prior to analysis.
    - SOP-A1 – Purging and Sampling of Groundwater Monitoring Wells, Well-Volume Method
    - SOP-A2 – Purging and Sampling of 1-inch-diameter Groundwater Monitoring Wells, Modified Well-Volume Method
    - SOP-A3 – Purging and Sampling of Active and Inactive Water Supply Wells
    - SOP-A4 – Depth-Specific Surface Water Sampling
    - SOP-A5 – Groundwater Sampling from Sonic Drilling Boreholes

- SOP-A14 – Pore Water Sampling
- SOP-A18 – Purging and Sampling of Groundwater Monitoring Wells Minimal Drawdown Method
- SOP-A19 – Sampling of Groundwater Monitoring Wells HydraSleeve No Purge Method
- Remedy-SOP-01 – Process Water Sampling.

3. Measure the pH of the raw sample (record the results in the SO_4^{2-} Bench Logbook).
4. Verify the spectrophotometer is set for Sulfate (Hach DR 4000V, program 3450) and verify all reagents are for 25 mL sample size (or adjust accordingly).
   - **Note: Turbid or colored samples (e.g. noticeable by eye) must be filtered.**
     - Filtering can be performed using an inline filter at the time of sampling (see SOP–A6, Sample Field Filtration and Preservation for Metals Analyses) or in the laboratory by vacuum filter.
     - Set up the vacuum filter apparatus.
     - Filter ~100 mL of sample.
5. Due to the high concentration of sulfate, all samples will start with a 1:25 dilution.
   - Add 1 mL of sample to 24 mL of DI water.
   - Mix the sample by swirling or shaking the sample.
6. Add 1 packet of SulfaVer® 4 Reagent.
7. Swirl to mix until the reagent powder is dissolved. (Note that the reaction will generate a white particulate that can be confused with the Reagent powder so pay close attention to what the Reagent powder looks like.)
8. Start the 5-minute reaction timer. **Do not disturb the sample cell during this time.**
9. After the 5 minutes has elapsed, run a blank. If the sample was filtered, use the filtered sample to "zero" the spectrophotometer.
   - **Note: do not use flow-through cell or Sipper Cell Modules.**
   - Wait until the 5 minute timer beeps before placing the blank into the cell holder and zeroing the instrument.
10. Analyze the samples immediately. **Note: do not filter at this stage.**
11. Record the instrument reading in the Lab SO_4^{2-} Bench Logbook.
12. Multiply the instrument reading by the dilution factor (25) and record in the result column.

    If the result is out of range for the spectrophotometer, reanalyze; if still out of range call the Project Chemist (Shawn Duffy) at 530-229-3303.

    Note: if an additional dilution is required, the spectrophotometer should be zeroed using a sample from the same dilution.

Quality Control (QC)

- With the first analysis of sulfate each shift, **analyze a Continuing Calibration Verification (CCV) standard** as a **Quality Control** check:
  - Transfer 25 mL of 70 mg/L Sulfate standard into a sample cell.
  - Add 1 packet of SulfaVer® 4 Reagent at the same time you add the reagent to your samples.
  - Follow steps 7 through 11 listed above (swirl, timer, blank, analyze, record). **Note:** The Blank for the CCV should be DI water.
  - **Record the CCV results in the SO_4^{2-} Bench Logbook.** If the instrument reading is not between 52.5 mg/L and 87.5 mg/L, re-prepare the standard and reanalyze.

    If the CCV is still not between 52.5 mg/L and 87.5 mg/L after reanalyses, call the Project Chemist (Shawn Duffy) at 530-229-3303.

Known Interferences

- Calcium at concentrations greater than 20,000 mg/L as $CaCO_3$.
- Chloride at concentrations greater than 40,000 mg/L as Cl.
- Magnesium at concentrations greater than 10,000 mg/L as $CaCO_3$.
- Silica at concentrations greater than 500 mg/L as SiO_2.

Standard Operating Procedure – Laboratory
PG&E Topock Program

Title: Alkalinity Analysis
Number: SOP-L15_Rev1
Revision Date: 10/13/2015

Scope

Standard operating procedure (SOP) for analysis of alkalinity.

Equipment and Supplies

- Safety glasses
- Latex gloves
- pH meter
- Phenolphthalein Indicator Solution
- Bromcresol Green-Methyl Red Indicator Solution
- Sulfuric acid standard solution, 0.020 N (Titrant)
- Buret, buret clamp and stand
- 250-mL Erlenmeyer flask
- Graduated cylinder – 50-mL or 100-mL
- Magnetic stir plate and magnetic stir bar

Procedure

1. Collect the sample(s) following the appropriate SOP (see below). Alkalinity samples should be analyzed within 24 hours. If the sample is held for more than 24 hours, store at 4°C and allow the sample to equilibrate to room temperature prior to analysis.
    - SOP-A1 – Purging and Sampling of Groundwater Monitoring Wells, Well-Volume Method
    - SOP-A2 – Purging and Sampling of 1-inch-diameter Groundwater Monitoring Wells, Modified Well-Volume Method
    - SOP-A3 – Purging and Sampling of Active and Inactive Water Supply Wells
    - SOP-A4 – Depth-Specific Surface Water Sampling
    - SOP-A5 – Groundwater Sampling from Sonic Drilling Boreholes
    - SOP-A14 – Pore Water Sampling
    - SOP-A18 – Purging and Sampling of Groundwater Monitoring Wells Minimal Drawdown Method
    - SOP-A19 – Sampling of Groundwater Monitoring Wells HydraSleeve No Purge Method
    - Remedy-SOP-01 – Process Water Sampling

2. Measure the pH of the raw sample (record the results in the Alkalinity Bench Logbook).
3. Fill the buret to the zero mark with 0.020 N Sulfuric Acid standard solution (Titrant).
4. Use the graduated cylinder to transfer 50 mL of the sample into an Erlenmeyer flask.
5. Add a clean stir bar.
6. Start the stir plate at a moderate rate (fast enough to stir the sample, but not fast enough to cause a vortex to form).

If the pH of the raw sample was greater than 8.3, proceed to Phenolphthalein Step (step 7 below). If the pH was equal to or less than 8.3, proceed directly to the Total Alkalinity Step (step 10).

Phenolphthalein Step:

7. Add six drops of Phenolphthalein Indicator Solution. Allow to mix with sample. Sample will be pink if Phenolphthalein alkalinity is present. If the sample does not turn pink, proceed to Total Alkalinity Step (step 10).
8. Slowly open the stop-cock allowing the Titrant to drip into the sample and mix. Stop the flow of Titrant as soon as the sample color changes from pink to colorless. (Note: the end point has not been reached until the sample remains colorless.)

   Calculate:
   mg/L phenolphthalein alkalinity as $CaCO_3$ = mL Titrant used × 20.

9. Record the phenolphthalein alkalinity in the Alkalinity Bench Logbook. Proceed to Total Alkalinity Step.

Total Alkalinity Step:

10. Add six drops of Bromcresol Green-Methyl Red Indicator Solution. Allow to mix with sample. There is no color change at this stage.
11. Slowly open the stop-cock allowing the Titrant to drip into the sample and mix. Stop the flow of Titrant as soon as the sample color changes from colorless to a light pink. (Note: the end point has not been reached until the sample remains light pink.)

    Calculate:
    mg/L Total alkalinity as $CaCO_3$ = total mL Titrant used × 20.

12. Record the Total alkalinity in the Alkalinity Bench Logbook.

    Note: if the sample's pH was 8.3 or less, the Total Alkalinity = Bicarbonate Alkalinity. If the pH was greater than 8.3, use the table below[1] to calculate the Carbonate, Bicarbonate, and Hydroxide Alkalinity.

[1] Table source: Hach Water Analysis Handbook, Fourth Edition, Rev. 2. Alkalinity, Buret Titration Method 8221. DOC316.53.01151.

Total alkalinity primarily includes hydroxide, carbonate, and bicarbonate alkalinities. The concentration of these types in a sample may be determined when the phenolphthalein and total alkalinities are known (*Alkalinity relationship* table).

Table 35 Alkalinity relationship

Row	Result of Titration	Hydroxide Alkalinity Equals:	Carbonate Alkalinity Equals:	Bicarbonate Alkalinity Equals:
1	Phenolphthalein Alkalinity equal to 0	0	0	Total Alkalinity
2	Phenolphthalein Alkalinity equal to Total Alkalinity	Total Alkalinity	0	0
3	Phenolphthalein Alkalinity less than one-half of Total Alkalinity	0	Phenolphthalein Alkalinity times 2	Total Alkalinity minus two times Phenolphthalein Alkalinity
4	Phenolphthalein Alkalinity equal to one-half of Total Alkalinity	0	Total Alkalinity	0
5	Phenolphthalein Alkalinity greater than one-half of Total Alkalinity	2 times Phenolphthalein Alkalinity minus Total Alkalinity	2 times the difference between Total and Phenolphthalein Alkalinity	0

Use the *Alkalinity relationship* table with the following procedure:

1. Does the phenolphthalein alkalinity equal zero? If yes, use Row 1.
2. Does the phenolphthalein alkalinity equal total alkalinity? If yes, use Row 2.
3. Divide the total alkalinity by 2 to calculate one-half the total alkalinity.
4. Select Row 3, 4 or 5 based on comparing the result of step c (one-half total alkalinity) with the phenolphthalein alkalinity.
5. Perform the required calculations if any.
6. Check your results. The sum of the three alkalinity types will equal the total alkalinity.

If you have any questions, call the Project Chemist (Shawn Duffy) at 530-229-3303.

Known Interferences

- Highly colored or turbid samples may mask the color change at the end points.

Standard Operating Procedure – Laboratory
PG&E Topock Program

Title: Total Organic Carbon Analysis by Hach Method 10129
Number: SOP-L16_Rev01
Revision Date: 10/13/2015

Scope

Standard operating procedure (SOP) for analysis of total organic carbon (TOC).

Equipment and Supplies

- Safety glasses
- Latex gloves
- Hach DR 4000V spectrophotometer or equivalent
- Spectrophotometer manufacturer's manual
- Test 'N Tube™ adapter for the spectrophotometer
- pH meter and pH paper (capable of measuring down to pH 2)
- TOC Bench Logbook
- Chemical oxygen demand (COD) Reactor or similar digestion block
- Stir plate and magnet stir bar
- Low Range TOC Acid Digestion Solution vials (Acid Digestion vials)
- Low Range TOC Indicator Ampules (indicator ampules)
- Sulfate Buffer Solution
- TOC Persulfate Powder Pillow
- Pipet: 0.1 – 1.0 mL, and a 1 – 5 mL or 1 – 10 mL.
- 50 mL Erlenmeyer flask
- 0.45 µm filter disc fitted to a disposable 50 mL syringe (syringe filter)
- Deionized (DI) water
- Kimwipes
- Paper towels
- Timer
- Fine point Sharpie (indelible ink pen)
- Small funnel (comes with each batch of TOC Acid Digestion vials)
- Test tube rack
- 10 mg/L TOC Working Standard

Procedure

1. Collect the sample(s) following the appropriate SOP (see below). TOC samples should be analyzed as soon as possible (within 48 hours if possible).

    - SOP-A1 – Purging and Sampling of Groundwater Monitoring Wells, Well-Volume Method
    - SOP-A2 – Purging and Sampling of 1-inch-diameter Groundwater Monitoring Wells, Modified Well-Volume Method

- SOP-A3 – Purging and Sampling of Active and Inactive Water Supply Wells
- SOP-A4 – Depth-Specific Surface Water Sampling
- SOP-A5 – Groundwater Sampling from Sonic Drilling Boreholes
- SOP-A14 – Pore Water Sampling
- SOP-A18 – Purging and Sampling of Groundwater Monitoring Wells Minimal Drawdown Method
- SOP-A19 – Sampling of Groundwater Monitoring Wells HydraSleeve No Purge Method
- Remedy-SOP-01 – Process Water Sampling

2. Measure the pH of the raw sample. Record the results in the TOC Bench Logbook.
3. Turn on the COD reactor and make sure it's set at 105°C.
4. Transfer 10 mL of sample into a 50 mL Erlenmeyer flask containing a magnetic stir bar.
5. Add 0.4 mL of Sulfate Buffer Solution (use pH paper to verify the pH is 2.0 or below – if needed add additional buffer, 0.1 mL at a time until pH ≤2).
6. Place the flask on a stir plate and set at a moderate speed for 10 minutes (swirls the sample but does not form a vortex). Steps 7 through 10 may be performed while the flask is being stirred.
7. Remove the number of Low Range TOC Acid Digestion Solution vials you'll need from the manufacture's packaging and place in the test tube rack (remember one for the reagent blank).
8. Label the Acid Digestion vials for the samples, including the reagent blank.
9. Using the funnel provided with the Acid Digestion vials, add the contents of one TOC Persulfate Powder Pillow to each vial (labeled in step 7).
10. Using a pipet add 3 mL of organic-free water (use DI water) to the reagent blank vial.
11. After the 10 minutes for stirring the 50 mL Erlenmeyer flask have elapsed, use a pipet to transfer 3 mL of prepared sample (sample in the Erlenmeyer flask) to the labeled vial(s) with the persulfate powder already added.
12. Holding the blue Indicator Ampule by the top, carefully rinse with DI water and wipe dry with a Kimwipe.
13. Lower the unopened ampule into one of the labeled Acid Digestion vials. Align the score mark (the score mark is in the narrowed "neck" of the ampule) with the top of the vial and snap off the top of the ampule allowing the ampule to drop into the Acid Digestion vial.
    - **Do not** tip or tilt the vial after the ampule is in the vial. **You do not want the indicator solution mixing with the sample.**
14. Repeat steps 12 and 13 for each sample and the reagent blank.

15. Cap the vials tightly and place in the COD Reactor. Start the reactor timer (2 hours). Verify the reactor is at 105°C.
16. After the 2 hour timer, remove the vials from the COD Reactor and place in the test tube rack, being careful to handle the vials by their caps which will have remained cool.
17. Allow the vials to cool for one hour.
18. Verify the Test 'N Tube™ adapter is installed in the spectrophotometer (see the manufacturer's manual for instructions).
19. Verify that the spectrophotometer is set for Low Range TOC (Hach DR/4000V, program 3655).
20. Holding the vial by its cap wipe the reagent vial with a damp paper towel and then with a dry Kimwipe to remove any fingerprints or other marks.
21. Use the reagent blank to "zero" the spectrophotometer.
    - Place the vial in the adapter and close the light shield.
    - Allow the meter to stabilize and press the Zero button.
22. After the spectrophotometer has been zeroed, repeat step 20 for each vial, place the vial in the adapter, close the light shield, allow the meter to stabilize, and record the instrument reading in the TOC Bench Logbook.
23. If the result is out of range for the spectrophotometer, reanalyze the sample using a dilution.

    Common dilutions:

    - 1:2 dilution: 25 mL of sample are diluted with 25 mL of DI water; multiply the instrument reading (result) by 2 for the adjusted value.

      Example: instrument reading is 3.54
      x 2
      = 7.08 mg/L (final result)

    - 1:5 dilution: 10 mL of sample are diluted with 40 mL of DI water; multiply the instrument reading (result) by 5 for the adjusted value.

      Example: instrument reading is 3.54
      x 5
      = 17.7 mg/L (final result)

    - 1:10 dilution: 10 mL of sample are diluted with 90 mL of DI water; multiply the instrument reading (result) by 10 for the adjusted value.
    - 1:20 dilution: 5 mL of sample are diluted with 95 mL of DI water; multiply the instrument reading (result) by 20 for the adjusted value.

Quality Control (QC)

- With the first analysis of TOC each shift, **analyze a Continuing Calibration Verification (CCV) standard** as a **Quality Control** check:
  - Carefully measure 9 mL of the DI water into a 50 mL Erlenmeyer flask containing a magnetic stir bar.
  - Add 1 mL of 10 mg/L TOC Working Standard to the DI water—this is your CCV**.**
  - Follow steps 5 – 22 with your "other" samples.
  - Check the recovery of the CCV. The concentration should be between 0.75 and 1.25 mg/L.
- Periodic **Matrix Spikes (MSs)** should be analyzed. Any time a sample result appears anomalous, consider analyzing an MS of that sample.
  - Determine what dilution, if any, is required for the MS (Note: you will be adding 1.0 mg/L to the sample concentration [the instrument reading]). If you have difficulty determining the dilution needed, call the Project Chemist (Shawn Duffy) at 530-229-3303.
  - Carefully measure 9 mL of the sample (diluted if required) into a 50 mL Erlenmeyer flask containing a magnetic stir bar.
  - Add 1 mL of 10 mg/L TOC standard to the sample—this is your MS**.**
  - Follow steps 5 – 22 with your "other" samples.
  - Check the recovery of the MS:

    Example: Matrix Spike (1.60 mg/L) - Sample (0.36 mg/L) = 1.24 mg/L

    Concentration of MS Standard = 1.0 mg/L

    % recovery is = 1.24/1.00 = 124%

    Note: MS % recovery must be between 75 – 125% or you will need to reanalyze.

    If the CCV or MS are still not between 0.75 mg/L and 1.25 mg/L after reanalyses, call the Project Chemist (Shawn Duffy) at 530-229-3303.

Known Interferences

- Many metals can cause interference at concentrations above 10 mg/L.
- Manganese above 1 mg/L.
- Alkalinity greater than 600 mg/L (reduce the pH to <7 with sulfuric acid); call the Project Chemist (Shawn Duffy) at 530-229-3303 before proceeding.
- Chloride above 500 mg/L.

Standard Operating Procedure – Laboratory
PG&E Topock Program

Title: Orthophosphate Analysis by Hach Method 8048
Number: SOP-L17_Rev01
Revision Date: 10/13/2015

Scope

Standard operating procedure (SOP) for analysis of orthophosphate (PO_4^{3-}).

Equipment and Supplies

- Safety glasses
- Latex gloves
- Hach DR 4000V spectrophotometer or equivalent
- pH meter
- PO_4^{3-} Bench Logbook
- Reaction vessel and cap or means of sealing the reaction vessel– (Hach sample cell, 50 mL beaker, vial capable of holding 30 mL, and parafilm if the vessel doesn't have a cap)
- 1 packet of PhosVer 3 Reagent per sample
- 5 mg/L phosphate (PO_4^{3-}) (working) standard
- 0.45 µm filter disc fitted to a disposable 50 mL syringe (syringe filter)
- Deionized (DI) water

Procedure

1. Collect the sample(s) following the appropriate SOP (see below). Orthophosphate samples should be analyzed as soon as possible (within 24 hours).
    - SOP-A1 – Purging and Sampling of Groundwater Monitoring Wells, Well-Volume Method
    - SOP-A2 – Purging and Sampling of 1-inch-diameter Groundwater Monitoring Wells, Modified Well-Volume Method
    - SOP-A3 – Purging and Sampling of Active and Inactive Water Supply Wells
    - SOP-A4 – Depth-Specific Surface Water Sampling
    - SOP-A5 – Groundwater Sampling from Sonic Drilling Boreholes
    - SOP-A14 – Pore Water Sampling
    - SOP-A18 – Purging and Sampling of Groundwater Monitoring Wells Minimal Drawdown Method

- SOP-A19 – Sampling of Groundwater Monitoring Wells HydraSleeve No Purge Method
- Remedy-SOP-01 – Process Water Sampling

2. Measure the pH of the raw sample in accordance with SOP-L9—pH Measurement. Record the results in the PO43- Bench Logbook.
3. Verify that the spectrophotometer is set for Reactive Phosphoros (Hach DR/4000V, program 3025) and verify all reagents are for 25 mL sample size (or adjust accordingly).
4. Transfer 25 mL of the sample into a reaction vessel. (Note: the sample cell or vessel must be able to be sealed with a cap or parafilm.)
5. Transfer 25 mL of DI water into a reaction vessel (this will be the "Blank").
6. Add 1 packet of PhosVer 3 Reagent to the blank and to each sample.
7. Shake the blank and the sample(s), using a 90° rotation of the wrist and back to the original position with a timing of once per second; until the powder is dissolved.
8. Start the 2 minute reaction timer.
9. After the 2 minute timer, use a syringe filter to filter any reagent powder that has not dissolved from the blank and then use the blank to "zero" the spectrophotometer.
    - Transfer the blank into the pour-through-cell funnel.
    - Allow the meter to stabilize and press the Zero button.
10. After the spectrophotometer has been zeroed, use a syringe filter to filter any reagent powder that has not dissolved from the sample(s) and transfer the sample into the pour-through-cell funnel (the sample port of the Hach DR/4000V). Analyze as soon as possible.
11. Record the instrument reading in the PO_4^{3-} Bench Logbook.
12. If the result is out of range for the spectrophotometer, reanalyze the sample using a dilution.

    Common dilutions:

    - 1:2 dilution: 25 mL of sample are diluted with 25 mL of DI water; multiply the instrument reading (result) by 2 for the adjusted value.

        Example: instrument reading is 3.54
        x 2
        = 7.08 mg/L (final result)

    - 1:5 dilution: 10 mL of sample are diluted with 40 mL of DI water; multiply the instrument reading (result) by 5 for the adjusted value.

        Example: instrument reading is 3.54
        x 5
        = 17.7 mg/L (final result)

    - 1:10 dilution: 10 mL of sample are diluted with 90 mL of DI water; multiply the instrument reading (result) by 10 for the adjusted value.

- 1:20 dilution: 5 mL of sample are diluted with 95 mL of DI water; multiply the instrument reading (result) by 20 for the adjusted value.

Quality Control (QC)

- With the first analysis of orthophosphate each shift, **analyze a Continuing Calibration Verification (CCV) standard** as a **Quality Control** check:
  - Carefully measure 24 mL of DI water into a sample cell.
  - Add 1 mL of 5 mg/L Phosphate (PO_4^{3-}) standard.
  - Add 1 packet of PhosVer 3 Reagent (include the CCV with your other samples).
  - Follow the remaining procedures as listed above for the samples (steps 6 through 10).
  - **Record the CCV results in the PO_4^{3-} Bench Logbook.** If the instrument reading is not between 0.15 mg/L and 0.25 mg/L, re-prepare the standard and reanalyze.
- Periodic **Matrix Spikes (MSs)** should be analyzed. Any time a sample result appears anomalous, consider analyzing an MS of that sample.
  - Determine what dilution, if any, is required for the MS (Note: you will be adding 0.2 mg/L to the sample concentration [the instrument reading]). If you have difficulty determining the dilution needed, call the Project Chemist (Shawn Duffy) at 530-229-3303.
  - Carefully measure 24 mL of filtered sample (diluted if required) into a reaction vessel (sample cell/vial).
  - Add 1 mL of 5 mg/L Phosphate (PO_4^{3-}) standard to the 24 mL of filtered sample—this is your MS**.**
  - Add 1 packet of PhosVer 3 Reagent at the same time you add the reagent to your "other" samples.
  - Follow the remaining procedures as listed above for the samples (steps 6 through 10).
  - Record the instrument reading in the PO_4^{3-} Bench Logbook.
  - Check the recovery of the MS:

    Example: Matrix Spike (1.60 mg/L) - Sample (1.36 mg/L) = 0.24 mg/L

    Concentration of MS Standard = .20 mg/L

    % recovery is = 0.24/0.20 = 120%

    Note: MS % recovery must be between 75 – 125% or you will need to reanalyze.

    If the CCV or MS are still not between 0.075 mg/L and 0.125 mg/L after reanalyses, call the Project Chemist (Shawn Duffy) at 530-229-3303.

Known Interferences

- Metal concentrations above 100 mg/L.
- Highly buffered samples or extreme sample pH may exceed the buffering capacity of the Reagents (sample pH should be between 2 and 10).

Standard Operating Procedure – Laboratory
PG&E Topock Program

Title: Manganese Analysis by Hach Method 8149
Number: SOP-L18_Rev01
Revision Date: 10/13/2015

Scope

Standard Operating Procedure (SOP) for the analysis of manganese (Mn).

Equipment and Supplies

- Safety glasses
- Latex gloves
- Hach DR 4000V spectrophotometer or equivalent
- Fume hood
- Vacuum filter apparatus: 47 mm magnetic filter funnels, 1,000 mL Erlenmeyer flask, and vacuum pump (use a 0.45 µm, 47 mm diameter filter membrane)
- 0.45 µm filter disc fitted to a disposable 50 mL syringe (syringe filter)
- pH meter
- Reaction vessel and cap or means of sealing the reaction vessel (Hach sample cell and Parafilm if the vessel doesn't have a cap)
- Deionized (DI) water
- 1 packet of Ascorbic Acid Reagent powder per sample
- Rochelle Salt Solution
- Alkaline-Cyanide Reagent Solution
- 0.1% PAN Indicator Solution
- 1 mg/L Manganese (working) standard
- Manganese Bench Log Book
- HNO_3 pH<3 (preservative if the samples can't be analyzed within 24 – 48 hours)

Safety

Caution and special procedures must be maintained when performing this analysis. The alkaline cyanide solution contains cyanide so **the waste must be collected and disposed of as a Reactive waste**.

To prevent the release of hydrogen cyanide gas, the cyanide waste should be stored in a caustic solution with pH >11. The waste must be stored as a base until properly disposed of.

Because the analysis has the potential of releasing hydrogen cyanide gas, **all solutions/reagents must be added in a fume hood.**

Procedure

1. Collect the sample(s) following the appropriate SOP (see list below). Samples should be analyzed as soon as possible. If the samples can't be analyzed within 24 – 48 hours, preserve with HNO_3 pH<3 until ready to analyze. Before starting the analyzing adjust the pH to a pH 4 – 5. **Note: all samples must be filtered prior to preservation/analysis**.
    - SOP-A1 – Purging and Sampling of Groundwater Monitoring Wells, Well-Volume Method
    - SOP-A2 – Purging and Sampling of 1-inch-diameter Groundwater Monitoring Wells, Modified Well-Volume Method
    - SOP-A3 – Purging and Sampling of Active and Inactive Water Supply Wells
    - SOP-A4 – Depth-Specific Surface Water Sampling
    - SOP-A5 – Groundwater Sampling from Sonic Drilling Boreholes
    - SOP-A14 – Pore Water Sampling
    - SOP-A18 – Purging and Sampling of Groundwater Monitoring Wells Minimal Drawdown Method
    - SOP-A19 – Sampling of Groundwater Monitoring Wells HydraSleeve No Purge Method
    - Remedy-SOP-01 – Process Water Sampling
2. Filtering can be performed using an inline filter at the time of sampling (see SOP–A6, Sample Field Filtration and Preservation for Metals Analyses) or in the laboratory by vacuum filter:
    - Set up the vacuum filter apparatus.
    - Filter ~100 mL of sample.
3. Measure the pH of the raw sample in accordance with SOP-L9— pH Measurement (**Record the results in the Mn Bench Log Book**). Adjust the pH (see step #1 above).
4. Verify that the spectrophotometer is set for **Manganese (Mn) (Hach DR/4000V program 2260)** and verify all reagents are for 10 mL sample size (or adjust accordingly).
5. In the fume hood, transfer 10 mL of filtered sample into a reaction vessel. Use DI water for a blank.
6. Add one packet of Ascorbic Acid Reagent powder to each sample (including the blank). Swirl to mix.
7. Add ten drops of Rochelle Salt Solution to each sample (including the blank). Swirl to mix.

8. Add 15 drops of Alkaline-Cyanide Reagent Solution to each sample (including the blank). Swirl to mix.
9. Add 21 drops of PAN Indicator Solution, 0.1%, to each sample (including the blank). Swirl to mix.
10. Start the 2 minute reaction timer.
11. After the 2 minute timer has sounded, use the blank to "zero" the spectrophotometer.
12. After zeroing the spectrophotometer analyze each sample.
13. Record the instrument reading in the Mn Bench Log Book.
14. If the result is out of range for the spectrophotometer, reanalyze the sample using a dilution.

    Common dilutions:

    - 1:2 dilution: 25 mL of sample are diluted with 25 mL of DI water; multiply the instrument reading (result) by 2 for the adjusted value.

      Example: instrument reading is 0.304
      x 2
      = .608 mg/L (final result)

    - 1:5 dilution: 10 mL of sample are diluted with 40 mL of DI water; multiply the instrument reading (result) by 5 for the adjusted value.

      Example: instrument reading is 0.304
      x 5
      = 1.52 mg/L (final result)

    - 1:10 dilution: 10 mL of sample are diluted with 90 mL of DI water; multiply the instrument reading (result) by 10 for the adjusted value.
    - 1:20 dilution: 5 mL of sample are diluted with 95 mL of DI water; multiply the instrument reading (result) by 20 for the adjusted value.

Quality Control (QC)

- With the first analysis of manganese each shift, **analyze a CCV** (Continuing Calibration Verification) standard as a **Quality Control** check:
  - Carefully measure 9 mL of DI water into a reaction vessel.
  - Add 1 mL of 1 mg/L Mn Standard. Swirl to mix.
  - Analyze with the samples - follow steps 6 – 13 above.
  - **Record the CCV results in the Mn Bench Log Book.** If the instrument reading is not between 0.075 mg/L and 0.125 mg/L, re-prepare the standard and reanalyze.

- Periodic **Matrix Spikes (MSs)** should be analyzed. Any time a sample result appears anomalous, consider analyzing an MS of that sample.
  - Determine what dilution if any is required for the matrix spike (note: you will be adding 0.1 mg/L to the sample concentration [the instrument reading]).
  - Carefully measure 9 mL of filtered sample (diluted if required) into a reaction vessel.
  - Add 1 mL of 1 mg/L Mn Standard to the 9 mL of filtered sample. Swirl to mix (this solution is called the MS)**.**
  - Analyze with the other samples - follow steps 6 – 13 above.
  - Record the instrument reading in the Mn Bench Log Book.
  - Check the recovery of the MS:

    Example: Matrix Spike (0.117 mg/L) - Sample (0.006 mg/L) = 0.111 mg/L

    Concentration of Spike Standard = 0.100 mg/L

    % recovery is = 0.111/0.100 = 111%

    MS % recovery must be between 75 – 125% or you will need to reanalyze.
  - If the CCV or MS are still not between 0.075 mg/L and 0.125 mg/L after reanalyses, call the Project Chemist (Shawn Duffy) at 530-229-3303.

Standard Operating Procedure – Laboratory
PG&E Topock Program

Title: Total Dissolved Solids Analysis
Number: SOP-L19_Rev01
Revision Date: 10/13/2015

Scope

This Standard Operating Procedure (SOP) covers the determination of Total Dissolved Solids (TDS) in groundwater or process water samples. The practical range of the method is 10 mg/L to 20,000 mg/L. If TDS concentrations are greater than 20,000 mg/L, then the sample can be diluted. If the sample is suspected to have a TDS concentration greater than 100,000 mg/L, the site analyst will consult with the Project Chemist.

Summary

A sample is passed through a filter, weighed, and then placed in an oven at 180°C until dried. The sample is allowed to cool in a desiccator, and then weighed to determine the dry weight of the original sample.

Safety

Extreme caution should be used when working around the drying oven (risk of severe burns).

Because of the high temperature of the drying oven the associated glassware is more prone to break on impact (risk of broken glass).

Equipment and Supplies

- Safety glasses
- Latex gloves
- Drying oven (capable of 180°C)
- Analytical balance (capable of measuring weights of 0.1 mg)
- Vacuum pump or other source of applying a vacuum
- Vacuum filter apparatus and filters (glass fiber filter discs, 47 mm, without organic binder, Reeve Angel type 934-AH, Gelman type A/E, or equivalent)
- 250 mL Pyrex glass beakers or equivalent
- Deionized (DI) water
- Conductivity meter
- Desiccator (capable of holding 5 – 6 250 mL Pyrex glass beakers
- Oven mitt or metal tongs (to transfer the hot beakers from the drying oven to the desiccator)

- Graduated cylinder(s) 20 mL, 50 mL, 100 mL
- TDS Bench Log Book

Procedure

1. Preparation of the evaporation vessels (beaker) must be performed ahead of time:
   - Thoroughly clean and dry a 250 mL Pyrex glass beaker.
   - Heat the clean vessel to 180° +/- 2°C for one hour.
   - Carefully transfer the hot beaker to the desiccator with the oven mitt or tongs for cooling and storage until needed.
2. Collect the sample(s) following the appropriate SOP (see list below). The samples should be analyzed within 7 days.
   - SOP-A1 – Purging and Sampling of Groundwater Monitoring Wells, Well-Volume Method
   - SOP-A2 – Purging and Sampling of 1-inch-diameter Groundwater Monitoring Wells, Modified Well-Volume Method
   - SOP-A3 – Purging and Sampling of Active and Inactive Water Supply Wells
   - SOP-A4 – Depth-Specific Surface Water Sampling
   - SOP-A5 – Groundwater Sampling from Sonic Drilling Boreholes
   - SOP-A14 – Pore Water Sampling
   - SOP-A18 – Purging and Sampling of Groundwater Monitoring Wells Minimal Drawdown Method
   - SOP-A19 – Sampling of Groundwater Monitoring Wells HydraSleeve No Purge Method
   - Remedy-SOP-01 – Process Water Sampling
3. Measure the Conductivity using SOP-L4 – Conductivity Analysis by Hach Method 8160. Refer to Table 1 for sample volume.

Table 1
Conductivity vs. Sample Volume Table

Conductivity of Sample	Sample Volume to Use for TDS
<1,500 µS/cm	100 mL
≥1,500 µS/cm and <4,700 µS/cm	50 mL
≥4,700 µS/cm	20 mL

4. Filter the sample in the laboratory using a vacuum filter:
    - Assemble the vacuum filter holder/flask assembly using a clean vacuum flask.
    - Place a 47-mm filter disc (see Equipment and Supplies section above for type of filter) in the filter holder and add the funnel.
    - With vacuum applied to the flask, wash the filter with three separate 20-mL volumes of DI water.
    - Continue applying vacuum for two to three minutes after the water has passed through the filter to ensure that all traces of the water are removed from the filter.
    - Disconnect the vacuum and discard the water from the flask.
    - Reconnect the filter holder/flask assembly to the vacuum.
    - Shake the sample vigorously.
    - Use a clean graduated cylinder to transfer the volume of sample determined from Table 1 above to the filter apparatus. Record the volume used in the TDS Bench Log Book.
    - Filter the sample through the glass fiber filter.
    - Rinse the filter with three 10 mL portions of DI water and continue to apply vacuum for about 3 minutes after filtration is complete to remove as much water as possible.
5. Retrieve a clean 250 mL Pyrex glass beaker from the desiccator and weigh to the nearest tenth of a milligram (0.1 mg); record the weight in the TDS Bench Log Book.
6. Transfer the filtered sample from the vacuum flask to the beaker. Rinse the flask with three 10 mL portions of DI water and pour into the beaker with the sample.
7. Place the sample in the drying oven; verify the oven is set at 180° +/- 2°C.
8. Allow the sample to reach complete dryness (4 hours or more).
9. Cool in a desiccator to approximately room temperature, and weigh the beaker (record the weight in the TDS Bench Log Book).
10. Repeat steps 7 through 9 (drying, cooling, desiccating, and weighing until a constant weight is obtained or until the change in weight is less than 0.5 mg between the consecutive cycles) and record the final weight in the TDS Bench Log Book.
11. Calculate the TDS using the formula shown below and record in the TDS Bench Log Book.

$$\text{mg total dissolved solids/L} = \frac{(A - B) \times 1000}{\text{sample volume, mL}}$$

where:

A = final weight of dried sample + dish (mg)
B = weight of dish (mg).

Appendix B
PG&E Program Quality Assurance Project Plan (*On CD-ROM Only*) and QAPP Addendum

PG&E Program Quality Assurance Project Plan
(*On CD-ROM Only*)

Revision 2

PG&E Program Quality Assurance Project Plan

Prepared for

Pacific Gas and Electric Company

August 2012

CH2MHILL®
155 Grand Ave. Suite 1000
Oakland, CA 94612

Document Title:	PG&E Program Quality Assurance Project Plan
Site Name:	PG&E Program wide
Site Location:	Multiple
Anticipated Sampling Dates:	Various
Prepared By:	CH2M HILL Date: August 2012
Address:	155 Grand Avenue, Suite 1000
City/State/Zip:	Oakland, California 94612
Telephone:	510/251-2426
Program Manager:	Eliana Makhlouf Phone: (415) 728-0625 x37025

****

Approved Eliana Makhlouf Date 02/05/2013
CH2M HILL Program Manager

Approved Steven P. Duff Date 02/05/2013
CH2M HILL PG&E Program Chemist

Approved Mark Adams Date 02/06/2013
CH2M HILL PG&E Program Quality Officer

Contents

Page

Section

Acronyms and Abbreviations ix

1 Introduction 1-1
1.1 Background 1-1
1.2 PG&E Program Objectives 1-1
1.2.1 PG&E Program Objectives and Scope 1-1
1.2.2 PG&E Program QAPP versus SAPs and QAPP Addenda 1-2
1.2.3 Analytical Project Planning 1-2
1.2.4 Data Quality Objectives 1-3

2 PG&E Program Organization and Responsibility 2-1
2.1 PG&E Program Organization 2-1
2.2 Project/Task Organization 2-1
2.3 Training and Certification Requirements 2-1

3 Sampling Procedures 3-1
3.0 Standard Operating Procedures 3-1
3.1 Sampling Design 3-1
3.2 Sampling Method Requirements 3-1
3.2.1 Field Calibration 3-1
3.2.2 Soil Sampling 3-2
3.2.3 Groundwater Sampling 3-5
3.3 Equipment Decontamination 3-7
3.4 Disposal of Investigation-derived Wastes 3-8
3.5 Field Quality Control Samples 3-8
3.5.1 Field Duplicate Samples 3-9
3.5.2 Equipment Blanks 3-9
3.5.3 Field Blanks 3-9
3.5.4 Trip Blanks 3-9
3.5.5 Matrix Spike/Matrix Spike Duplicate 3-9
3.5.6 Split Samples 3-10

4 Sample Handling and Custody 4-1
4.1 Sample Documentation and Tracking 4-1
4.2 Containers and Preservatives 4-2
4.3 Chain-of-Custody 4-2
4.4 Laboratory Responsibilities 4-3
4.5 Sample Packaging and Transport 4-4
4.5.1 Sample Container Preparation 4-5
4.5.2 Shipping Cooler Preparation 4-5
4.5.3 Placing Samples in the Cooler 4-5

Contents, Continued

Page

4.5.4 Closing the Cooler 4-5
4.5.5 Transport 4-6

5 Method Quality Objectives and Quality Assurance Program 5-1
5.1 Data Categories 5-1
5.2 Precision, Accuracy, Representativeness, Completeness, and Comparability 5-1
5.2.1 Precision 5-1
5.2.2 Accuracy 5-2
5.2.3 Representativeness 5-2
5.2.4 Completeness 5-2
5.2.5 Comparability 5-2
5.3 Method Detection Limits, Reporting Limits, and Instrument Calibration Requirements 5-2
5.3.1 Method Detection Limits 5-2
5.3.2 Reporting Limits 5-4
5.3.3 Instrument Calibration 5-4
5.4 Elements of Analytical Quality Control 5-7
5.4.1 Method Blanks 5-7
5.4.2 Laboratory Control Sample 5-8
5.4.3 Surrogates 5-8
5.4.4 Matrix Spike/Matrix Spike Duplicate 5-8
5.4.5 Internal Standards 5-9
5.4.6 Laboratory Sample Duplicate 5-9
5.4.7 Interference Check Samples 5-10
5.4.8 Retention Time Windows 5-10
5.5 Additional Quality Control Requirements 5-10
5.5.1 Holding Time 5-10
5.5.2 Confirmation 5-10
5.5.3 Cleanup Procedures to Minimize Matrix Effects 5-10
5.5.4 Sample Dilution 5-11
5.5.5 Standard Materials and Other Supplies and Consumables 5-11
5.5.6 Manual Integration 5-11
5.5.7 Laboratory Quality Assurance Program 5-12
5.6 Analytical Procedures 5-12
5.7 Title 22 Metals 5-13

6 Data Reduction, Validation, and Reporting 6-1
6.1 Laboratory Data Management 6-1
6.2 Hardcopy and Electronic Deliverables 6-4
6.3 Data Validation and Verification 6-5
6.4 Level 3 and 4 Validation Procedures 6-6

Contents, Continued

Page

7 Performance Evaluations 7-1
7.1 Technical Systems Audits 7-1
7.1.1 Laboratory Audits 7-1
7.1.2 Field Audits 7-2
7.2 Performance Audits 7-2
7.2.1 Performance Evaluations 7-2
7.2.2 External Audits 7-3
7.2.3 Internal Audits 7-3

8 Preventive Maintenance 8-1
8.1 Maintenance Responsibilities 8-1
8.2 Maintenance Schedules 8-1
8.3 Spare Parts 8-2

9 Data Assessment 9-1
9.1 Data Quality Assessment 9-1
9.2 Reconciliation with Project Objectives 9-1

10 Corrective Action 10-1

11 Quality Assurance Reports 11-1

12 Data Management 12-1
12.1 Archiving 12-1
12.2 Data Flow and Transfer 12-1
12.3 Record Keeping 12-1

13 References 13-1

Tables
(Tables appear at the end of the section in which they are first referenced.)

4-1 Sample Containers, Preservation, and Holding Times 4-7

5-1 Maximum Concentrations for Title 22 – Organic Compounds – SW8000 Series 5-15

5-2 Extraction and Digestion Methods ..... **Error! Bookmark not defined.**

5-3 Surrogate Recovery for Organic Compounds – SW8000 Series 5-16

5-4 Calibration and QC Requirements for Metals – SW6010B and EPA200.7 5-17

5-5 Calibration and QC Requirements for Metals – SW6020 and EPA200.8 5-18

5-6 Calibration and QC Requirements for Metals – SW7000 Series and EPA245.1 5-20

Contents, Continued

Page

5-7 Calibration and QC Requirements for General Chemistry and Other Parameters 5-21

5-8 Calibration and QC Requirements for Hexavalent Chromium – SW7199 and EPA218.6 5-22

5-9 Soil Preparation Method SW3060A for Method SW7199 5-24

5-10 Calibration and QC Requirements for SIsotopes 5-24

5-11 Calibration and QC Requirements for TPH, BTEX, Herbicides, and Dissolved Gases – SW8015B, SW8021B, SW8151A, and RSK-175S 5-25

5-12 Calibration and QC Requirements for Pesticides and PCBs – SW8081A and SW8082 5-26

5-13 Calibration and QC Requirements for VOCs – SW8260B 5-27

5-14 Calibration and QC Requirements for Semivolatile Organic Compounds – SW8270C 5-29

5-15 Calibration and QC Requirements for Polynuclear Aromatic Hydrocarbons – SW8270C SIM 5-30

6-1A Data Guidelines for Electronic Data Deliverables 6-8

6-1B Data Guidelines for Electronic Data Deliverables 6-13

6-2 Flagging Conventions for Organic Methods 6-15

6-3 Flagging Conventions – Minimum Data Evaluation Criteria for Inorganic Methods 6-18

6-4 Qualifier Flag Definitions 6-21

Appendices

Appendix A Reporting Limits, Accuracy, and Precession Limits

Acronyms and Abbreviations

%D	percent difference or drift
%R	percent recovery
°C	degrees Celsius
µg/L	microgram(s) per liter
µmhos/cm	micromhos per centimeter
AB	ambient blank
AFCEE	Air Force Center for Engineering and the Environment (formerly the Air Force Center for Environmental Excellence)
ASTM	American Society for Testing and Materials
AutoDV	automated data validation
BTEX	benzene, toluene, ethylbenzene, and xylene
CAS	Chemical Abstract Service
CF-IRMS	continuous-flow isotope ratio mass spectrometry
CHHSL	California Human Health Screening Levels
CoC	chain-of-custody
COPC	contaminate of potential concern
DOC	dissolved organic carbon
DQO	data quality objective
DTSC	California Department of Toxic Substance Control
EB	equipment rinsate blank
EDD	electronic data deliverable
EPA	U.S. Environmental Protection Agency
FB	field blank
FD	field duplicate
ICAL	initial calibration
ICP	inductively coupled plasma
ICP-MS	inductively coupled plasma/mass spectrometry
ID	identifier
IDW	investigation-derived waste
IPC	instrument performance check

LCS	laboratory control sample
MCT	matrix concentration threshold
MDL	method detection limit
mg/kg	milligrams per kilogram
mg/L	milligrams per liter
ml	milliliter
MS	matrix spike
MSA	method of standard addition
MSD	matrix spike duplicate
MQO	method quality objective
PARCC	precision, accuracy, representativeness, completeness, and comparability
PCB	polychlorinated biphenyls
pCi/L	picocuries per liter
PDF	portable document format
PG&E	Pacific Gas and Electric Company
PNA	polynuclear aromatic hydrocarbon
PPE	personal protective equipment
PST	planned sample table
QA	quality assurance
QAPP	quality assurance project plan
QC	quality control
RCRA	Resource Conservation and Recovery Act
RL	reporting limit
RPD	relative percent difference
RRF	relative response factor
RSD	relative standard deviation
RT	retention time
SAP	sampling and analysis plan
SIM	selected ion monitoring
SOP	standard operating procedure
STLC	soluble threshold limit concentration
SVOC	semivolatile organic compound
TB	trip blank

TCLP	toxicity characteristic leaching procedure
TDS	total dissolved solids
TKN	total Kjeldahl nitrogen
TOC	total organic carbon
TPH	total petroleum hydrocarbon
TSS	total suspended solids
TTLC	total threshold limit concentration
VOA	volatile organic analysis
VOC	volatile organic compound

SECTION 1

Introduction

This *Pacific Gas and Electric Company Program Quality Assurance Project Plan* (QAPP), Revision 2 was prepared to ensure that data of appropriate quality are collected and used for multiple sites for Pacific Gas and Electric Company (PG&E) projects that CH2M HILL supports. Each project will have a sampling and analysis plan (SAP), this QAPP, and QAPP addenda required to meet the project-specific requirements.

1.1 Background

CH2M HILL has been providing services to PG&E since the 1970s. Currently, CH2M HILL and affiliate companies are working at approximately 35 sites for PG&E. CH2M HILL provides services for the following:

- **Site management.** Projects include soil and groundwater monitoring, site characterization, and remediation design systems.
- **Remediation construction.** Projects include soil excavation, disposal, and treatment system construction.
- **Ecosystems and permitting.** Projects include proponent's environmental assessments, California Environmental Quality Act documentation, and other permitting and planning projects.
- **Engineering design.** Projects include computer-aided design and support and structural analysis.

1.2 PG&E Program Objectives

1.2.1 PG&E Program Objectives and Scope

This QAPP presents the quality assurance (QA) and quality control (QC) requirements designed to ensure that environmental data collected for the PG&E Program will be of the appropriate quality to achieve the objectives defined in the project-specific SAPs or QAPP addenda, unless otherwise defined. Specific protocols for sampling, sample handling and storage, chain-of-custody (CoC), laboratory analyses, data handling, and data evaluation and assessment are discussed. Requirements for performance evaluations, corrective actions, and preventive maintenance of equipment are specified. The elements included in this QAPP are consistent with those specified in the *EPA Requirements for Quality Assurance Project Plans* (U.S. Environmental Protection Agency [EPA], 2001a) and *EPA Requirements for Quality Management Plans* (EPA, 2001b) (note that the latter was reissued in March 2006). The objectives of this QAPP are as follows:

- Ensure that data collection and measurement procedures are standardized among all participants.

- Monitor the performance of the various measurement systems within the PG&E Program to maintain statistical control and provide rapid feedback so that corrective measures, if needed, can be implemented before data quality is compromised.
- Periodically assess the performance of these measurement systems and their components.
- Verify that reported data are sufficiently complete, comparable, representative, unbiased, and precise so that they are suitable for their intended use.

This QAPP is intended for use by CH2M HILL and its subcontractors that provide services associated with the environmental data collection effort. The QAPP supplements all SAPs and any other project-specific documents. The PG&E Program quality officer and the program chemist are primarily responsible for implementation of this QAPP.

1.2.2 PG&E Program QAPP versus SAPs and QAPP Addenda

Elements such as the general description, sources of contamination, information from previous investigations, and proposed investigations are addressed in project or site-specific SAPs or QAPP addenda. PG&E Project-specific QAPP addenda will cover items not included in this QAPP or any in conflict with it. The guidance set forth in this QAPP will be followed in the absence of site specific SAPs or QAPP addenda.

The PG&E project-specific SAPs or QAPP addenda should specify project-specific analytes and analytical methods that differ from the QAPP. The project manager or a designee will determine the reporting limit (RL) requirements, evaluate the QAPP specifications to make certain they meet those requirements, and address any differences in a QAPP addendum. The QAPP addendum will be included as part of the project-specific documents when project requirements dictate variance from the QAPP.

Project-specific preliminary cleanup goals or action levels will be included in the SAPs or QAPP addenda, if available. The project-specific documents will indicate sources for the preliminary cleanup goals or action levels. In cases where available technology does not offer analytical methods that are sufficiently sensitive to detect concentrations at or below the reference levels cited by the source, the method RLs will be used as the preliminary cleanup goals or action levels. All goals are subject to revision and will be documented.

Appendix A presents the analytical requirements for Reporting Limits, Accuracy, and Precession Limits.

1.2.3 Analytical Project Planning

The PG&E Program has a laboratory procurement process, modeled after the Air Force Center for Engineering and the Environment (AFCEE) (formerly the Air Force Center for Environmental Excellence), EPA, the U.S. Navy, and other federal programs. The process balances the PG&E Program quality, defensible data, and costs. The model has identified three steps in planning the analytical needs of a project:

1. **Determine the requirements.** To determine project-specific requirements, the program chemist should attend kick-off meetings (or equivalent) to understand the project goals and help develop the analytical scope of work.

2. **Determine the laboratory needs and select the laboratory.** Factors influencing the selection of analytical, geotechnical, radiochemistry laboratories include the matrices sampled; laboratory capabilities, recent performance, and location; and price. The program chemist ensures that the laboratory selected is appropriate to meet project objectives. The more information regarding the project objectives given to the chemists, the better chance they have to control liabilities related to analytical work.
3. **Decide what level of data validation is required to provide defensible data at the appropriate level of QC.** See Section 6.3 for descriptions of the data validation process. When a request for proposal is received from PG&E, there is a kickoff meeting of key people, including the project manager, the responsible contract administrator, the program chemist (or sometimes a project-specific chemist), a representative from project delivery, and others, depending on the type of project. Laboratory scope is discussed and a plan is determined that will provide the appropriate analytical services.

1.2.4 Data Quality Objectives

The specific needs for the data collected during each activity will be examined to ensure that project objectives for each investigation will be optimally achieved. A graded approach will be used in developing the project data quality objectives (DQO) to ensure that the DQO process will be appropriate for the nature, size, cost, and risk associated with the task or project. All projects will begin by examining EPA's seven-step DQO process (EPA, 2000); based on the level of project complexity and intended use of the data, the level of detail and applicability of the seven-step process will be assessed. The DQO process should consider the following steps (if applicable):

1. **State the problem.** Concisely describe the problem to be investigated. This determines the need for data collection. Review existing information to define the problem.
2. **Identify the decision**. Identify the decision that will solve the problem by using the data to be collected.
3. **Identify the inputs to the decision**. Identify the information and environmental measurements that are needed to support the decision.
4. **Define the study boundaries**. Specify the times, spatial areas, and other conditions (e.g., target analytes) that determine when and where data should be collected.
5. **Develop a decision rule**. For each decision, define the conditions that would cause the decision maker to choose between alternate actions (the decision rule is usually in the form of an "if…then" statement).
6. **Specify tolerable limits for decision errors**. Define how much uncertainty can be tolerated by the decision maker. Determine the acceptable error rates based on the consequences of making an incorrect decision.
7. **Optimize the design**. Evaluate information from the previous steps and choose the most resource-efficient design for data collection that will support a reliable decision.

SECTION 2

PG&E Program Organization and Responsibility

2.1 PG&E Program Organization

The PG&E Program management team has been structured with a program manager, program quality control manager, program health and safety manger and a program chemist to ensure that the goals of the PG&E Program are met.

2.2 Project/Task Organization

The organization chart and descriptive text identifying task managers and individuals charged with specific responsibilities for each project can be found in project-specific SAPs. Lines of authority and the scope of authority given to each key member of the project team, including the authority to initiate and approve corrective actions, are discussed in the SAPs. All subcontractors and scopes of work are also identified in the project- or site-specific SAPs.

2.3 Training and Certification Requirements

All personnel engaged in field activities will have completed the Occupational Safety Health Administration, 40-hour health and safety training that meet the requirements of Title 29 Code of Federal Regulations Section 1910.120 and Title 8 Code of California Regulations Section 5192. All CH2M HILL personnel working on the PG&E Program will read applicable project-specific health and safety plans. Documentation will be maintained to demonstrate that all requirements of the plan are followed.

All laboratories contracted for analytical services will be certified under the California Department of Health Environmental Laboratory Accreditation Program, when appropriate and where accreditation is afforded under the California program. No analyses may be performed or reported if accreditation is revoked. Any loss or suspension of accreditation must be communicated to CH2M HILL within 24 hours of notification. Laboratory managers will ensure that all laboratory personnel have been properly trained and are qualified to perform the assigned tasks.

SECTION 3

Sampling Procedures

3.0 Standard Operating Procedures

All sample collection and related activities will follow the appropriate standard operating procedure (SOP). SOPs are located in the project work plan, SAP, QAPP addendum, or other project documents.

3.1 Sampling Design

The number and location of samples are specific to each site and are discussed in the project-specific SAPs. The rationale for the sampling design is also described in the SAPs as part of the project DQOs. The sampling design is a function of the medium sampled, information about the sampling site, the type of data to be collected, and how the data are to be used.

All projects should use the field database and provide a planned sample table (PST), CoC forms, and other database-generated paperwork whenever possible. All samples collected for offsite laboratories will be documented on a CoC form.

The procedures described in the following sections may be superseded or supplemented by the project-specific SAPs or QAPP addenda.

3.2 Sampling Method Requirements

This section addresses the requirements for soil and groundwater sampling. Many projects will require site-specific SOPs because of unique conditions that should be addressed in the project-specific work plan, SAP, QAPP addenda or other project-specific documents. Small projects will need to have sampling SOPs, but may find an existing SOP that can be adopted for the specific needs of the project.

3.2.1 Field Calibration

Field equipment will be calibrated before the start of work and recorded in the field notebook or daily calibration log. Any instrument drift from prior calibration should be noted. Calibration will be in accordance with procedures and schedules in the particular instrument's operations manual.

Calibrated equipment will be uniquely identified by using the manufacturer's serial number or other means. A label with the identification number and the date when the next calibration is due (scheduled calibrations) will be physically attached to the equipment. If this is not possible, records traceable to the equipment (e.g., showing the equipment identification) will be readily available for reference. Instrument identification and the results of calibrations and records of repairs will also be recorded in the logbook or daily calibration log.

Scheduled periodic testing equipment calibration does not relieve field personnel of the responsibility of using properly functioning equipment. If equipment malfunction is suspected, the device shall be removed from service, tagged so that it is not inadvertently used, and the appropriate personnel notified so that a recalibration can be performed or substitute equipment can be obtained. Equipment that fails calibration or becomes inoperable during use will be removed from service and either segregated to prevent inadvertent use or tagged to indicate it is out of calibration. Such equipment will be repaired and satisfactorily recalibrated. Equipment that cannot be repaired will be replaced.

3.2.2 Soil Sampling

Sampling locations will be specified in the project-specific SAPs, but the exact locations will be determined in the field based on such factors as accessibility and topography. The exact locations will be recorded in the field logbook or on the field sampling form when sampling is completed. A sketch of the sampling location will be entered into the logbook, if necessary, with reference points labeled including distances to the sampling location. Location of the sampling point by a global positioning system may be required.

Soil sampling using decontaminated equipment will be performed as described in the following sections. Each sample container will be closed as soon as it is filled; it will be chilled and processed for shipment to an offsite laboratory to allow laboratory analysis within the applicable holding time.

ALL SOILS SAMPLE RESULTS WILL BE REPORTED IN DRY WEIGHT UNLESS OTHERWISE SPECIFIED IN THE SAP.

3.2.2.1 Surface Soil Sampling

Surface soil sampling will follow the project-specific SOPs, but generally, samples will be collected as grab samples at the depth interval specified in the project-specific SAP for each location. Samples will be collected using a decontaminated stainless steel or nonmetallic hand trowel or equivalent equipment (sampling equipment should be chosen based on the analyte of concern for the specific sample). A Terra Core sampler, EasyDraw Syringe, cutoff disposable syringe or equivalent equipment will be used for volatile organic compounds (VOC), as described in Section 3.2.1.4. Samples to be analyzed for VOCs will be collected first. Samples to be analyzed for all other analytes should be placed in a sample-dedicated, 1-gallon, disposable pail or a decontaminated stainless steel bowl. The samples will be homogenized (using the trowel), and transferred to the appropriate containers. To prevent potential contaminant migration from the sample, sample containers will be filled to the top, taking care to prevent soil from remaining in the lid threads prior to being sealed.

3.2.2.2 Subsurface Soil Sampling

Subsurface soil sampling will follow the project-specific SOPs, but generally, samples will be collected by boring to the depth specified in the project-specific SAP using an appropriately sized hand auger or equivalent equipment. Once the specified depth is reached, the hand auger will be removed, and accumulated soil will be set aside in a sample-dedicated disposable pail or tarp. A different, clean hand auger will be inserted into the hole to collect the sample (decontamination of the boring implement is sufficient if multiple boring implements are not available). Other sampling devices, such as push tubes or split-spoon

samplers, may be used. A Terra Core sampler, EasyDraw Syringe, cutoff disposable syringe, or equivalent equipment will be used for VOCs, as described below. Samples to be analyzed for VOCs will be collected first. Samples to be analyzed for all other analytes should be placed in a sample-dedicated, 1-gallon, disposable pail or a decontaminated stainless steel bowl. The samples will be homogenized (using the trowel) and transferred to the appropriate containers. To prevent potential contaminant migration from the sample, sample containers will be filled to the top, taking care to prevent soil from remaining in the lid threads prior to being sealed.

3.2.2.3 Confirmation Sampling for Soil Excavation

This procedure is outlined in the project-specific SOPs. Confirmation sampling will be performed prior to closure of any excavation. Confirmation samples are usually collected from the bottom and sides of the excavation. The number and type of samples collected should be of sufficient quantity to be representative of the excavated site. The project- or site-specific SAP should address the number, type, and quantity of samples to be collected. All confirmation samples should be analyzed by the analytical methodology specified herein or in the project-specific QAPP addendum (collection of soil samples for determination of VOCs shall be in accordance with Section 3.2.1.4.). Field or laboratory screening data should not be used to verify that contamination has been removed below project action levels unless specifically approved by the overseeing regulatory agency.

3.2.2.4 Soil Sampling for Volatile Organic Compounds

See project-specific SOP for procedure. Guidelines for collecting soil samples for VOC analysis are provided in Method SW5035B. These sampling techniques are applicable to analysis by methods SW8260B or C and SW8015B or D (volatile parameters). Sampling for VOCs may be accomplished by using an EasyDraw Syringe, a Terra Core sampler, a cutoff plastic syringe, or any equivalent sampling device.

VOC samples will be collected into pre-tarred vials with or without preservatives. Preserved samples will be chilled and sent to the lab in accordance with the appropriate SOP. Unpreserved VOC samples will be frozen or chilled in the field. If chilled to 4 degrees Celsius (°C) (±2°C), the samples will be shipped by overnight express delivery (or courier) the same day they are collected. If frozen, appropriate measures should be taken to ensure that frozen samples remain frozen until receipt by the laboratory. If samples remain frozen, the laboratory has 14 days from date of collection to analyze the samples. If samples thaw to temperatures higher than 4°C (±2°C), they must be analyzed within 48 hours of collection. If the temperature does not exceed 4°C (±2°C), the laboratory may (1) freeze the samples between -7 and -20°C within 48 hours of collection and keep them frozen or (2) preserve them in sodium bisulfate or methanol within 48 hours of collection. Either of these procedures will extend the holding time to 14 days.

Sampling Using Cutoff Syringe. A disposable syringe capable of measuring 1 to 5 milliliters (ml) (±0.5 ml) is required. Calibration in the field will be needed for the specific soil type and the type of syringe to determine the proper setting on the syringe to collect the samples. For example, the plunger is set to 5 ml, and the sample is collected and weighed; if 5 grams (±0.5 gram) are not obtained, the process is repeated until the correct plunger setting is identified. The same procedure is repeated for the 1-gram sample. Once the volume setting

is identified, all soils of similar type will be collected at this volume. Samples can be collected with or without field preservation. When field preservation is chosen, the samples are collected into vials pre-preserved with methanol or sodium bisulfate. Otherwise, samples can be collected into vials without preservative, and preservation can be performed by the laboratory upon receipt of the samples within 48 hours of collection.

Sampling with Terra Core Sampler or EasyDraw Syringe. The sample is collected into the Terra Core or equivalent sampler following the manufacturer's instructions. A minimum of three samples will be collected. Two aliquots are needed for low-level analysis and reanalysis if necessary. The third aliquot is needed for extraction in methanol by the laboratory in case high-concentration analysis is indicated. Exposure to air must be minimized.

Sampling with Field Preservation. Before using this option, determine if the soil is amenable to the sodium bisulfate preservative. Soil samples that contain carbonate minerals may effervesce upon contact with the preservative. If the amount of gas generated is small (little if any effervescence with the preservative), field preservation may be used. If rapid or vigorous gas generation is observed, the sample should be collected without field preservation. If the sample is amenable to field preservation, it is collected using one of the methods listed above and quickly transferred into a VOC vial with preservative. The vial should be quickly sealed to avoid significant loss of volatiles components. The laboratory will supply a minimum of three preweighed VOC vials with 5 ml of aqueous sodium bisulfate preservative as described in Method SW5035B, as well as a single preweighed VOC vial without the preservative for each sample to be analyzed for VOCs. Two 5-gram aliquots in bisulfate are required for low-concentration analysis and reanalysis, when necessary. One 5-gram aliquot without sodium bisulfate is required for extraction in methanol by the laboratory in case high-concentration analysis is indicated by a low-concentration or screening analysis of the sample. One 1-gram sample in bisulfate is needed because the possibility exists that neither the 5-gram sample intended for low-concentration analysis, nor the 5-gram sample intended for high-concentration analysis, will have all target analyte concentrations within the calibration range. Exposure of the sample to air must be minimized.

If VOC analyses are the only analyses being performed for samples collected from any location; an additional 2- or 4-ounce soil sample must also be collected to analyze for percent moisture.

Sampling without Field Preservation. The samples will be collected using one of the methods listed above and quickly transferred into a minimum of three preweighed, vials without preservative supplied by the laboratory. These preweighed vials may be empty, they may contain reagent water, or they may be preserved with methanol, depending on whether the contaminant concentration is at low- or high-level concentration. Two 5-gram aliquots are needed for low-concentration analysis and reanalysis, when necessary. In addition, one 5-gram aliquot is required for extraction in methanol by the laboratory in case high-concentration analysis is indicated by a low-concentration or screening analysis of the sample. One 1-gram sample is also recommended because the possibility exists that neither the 5-gram sample intended for low-concentration analysis, nor the 5-gram sample intended for high-concentration analysis, will have all target analyte concentrations within the calibration range. Exposure of the sample to air must be minimized. Freezing the samples

between -7 and -20° C within 48 hours and keeping them frozen until analysis allows a 14-day holding time.

If VOC analyses are the only analyses being performed for samples collected from any location; an additional 2- or 4-ounce soil sample must also be collected to analyze for percent moisture.

3.2.3 Groundwater Sampling

3.2.3.1 Water Level Measurement

See project specific SOP for procedure. Field meter probes and water level sounding equipment will be decontaminated before and after each use at each well. Water levels in wells that are known or suspected to be least contaminated will be measured first. Water levels in wells that are known or suspected to have the highest contamination will be measured last.

If well heads are accessible, all wells will be sounded from the top of the casing to determine the depth to water and total well depth prior to purging. An electronic sounder, accurate to ±0.01 foot, will be used to measure depth to water in each well. Annual calibration documentation shall be maintained on file. The serial number of the meters shall be recorded in the sampling logbook. When using an electronic sounder, the probe will be lowered down the casing to the top of the water column, and the graduated markings on the probe wire or tape will be used to measure the depth to water from the surveyed point on the rim of the well casing. (Typically, the measuring device emits a constant tone when the probe is submerged in standing water. Most electronic level sounders have a visual indicator consisting of a small light bulb or diode that turns on when the probe encounters water.) The total well depth will be sounded from the surveyed top of the casing by lowering the weighted probe to the bottom of the well. The weighted probe will sink into silt, if present, at the bottom of the well screen. The total well depth will be measured by recording the depth to the nearest 0.1 foot.

3.2.3.2 Well Purging

See project specific SOPs for procedure. All wells will be purged prior to sampling. All equipment that will contact the sample during purging and sampling will be decontaminated prior to each use.

Low-flow Purge. One option for well sampling is low-stress (low-flow) purging using a pump capable of a purge rate of 1 liter per minute or less. Typically, a pneumatic or small electric submersible pump is used. The water level should be monitored approximately every 5 minutes. The flow rate should be started at the minimum flow capacity of the pump, then gradually increased until initial drawdown is observed. The flow rate should then be reduced slightly to achieve a stabilized pumping level. This reduced rate should become the maximum purge rate for the well. Each adjustment to the flow rate and the water level measured after each adjustment should be recorded. The flow rate should not exceed 1 liter per minute. Care should be taken to maintain pump suction and avoid entrapment of air in the tubing.

Casing Volume Purge. Another option for well sampling is three casing volume (macro-purging) using a pump capable of purging 1 to 5 gallons per minute, usually an electrical

submersible pump. Purging will be conducted at a flow rate sufficient to remove water from the entire screened interval of the well. However, the purge rate should not result in substantial drawdown, which is defined as 5 percent of the water column or the top of the screened interval. Purging will consist of the removal of a minimum of three casing volumes of water.

For low-yield wells (wells that exhibit less than 80 percent recovery [%R], within 2 hours), one casing volume of water shall be removed. If pump capability allows, the well will be purged at a rate of less than 1 gallon per minute. The well will then be allowed to recover to 80 percent and sampled within 24 hours of purging.

Water Quality Parameter Stabilization. To ensure representative sampling, water quality parameters (dissolved oxygen, pH, redox potential, specific conductance, and turbidity) must be stable before samples are collected, regardless of purge technique. Parameters will be measured approximately every 3 to 5 minutes, depending on the rate and duration of the purge. Purging is considered complete when the following water quality parameters are stable (i.e., for three consecutive readings):

- The pH varies by no more than 0.1 pH unit.
- Specific conductance readings are within 10 percent of the average.
- The redox potential varies by no more than 10 millivolts.
- The dissolved oxygen readings are within 10 percent of the average.

The water used to make measurements will not be used to fill sample bottles.

If the macro-purge technique is used, three casing volume well purges must be complete **and** the water quality parameters must be stable before the sample is collected. The total amount of water purged will be recorded in the field logbook or well-specific purge and sample collection form.

Grab-sample Collection. In some instances, it is appropriate to collect a grab sample from a monitoring well. For example, when a low-yield well has been purged and allowed to recharge. A bailer can be used to collect the sample without additional purge, eliminating the need to deploy a well pump for sample collection.

If a bailer is used to collect samples, a sufficient volume of water must be collected to fill the sample bottles and perform one measurement of water quality parameters. The water quality parameters will be recorded in the field logbook or well-specific purge and sample collection form.

3.2.3.3 Well Sampling

See project specific SOPs for procedure. Prior to sampling each well, the water level will be measured and the well purged, as previously described. All wells will be sampled within 24 hours of purging. Wells without a dedicated pump will be sampled using a bailer of appropriate material, such as Teflon or stainless steel. Wells with a dedicated pump will be sampled directly from the tap closest to the well head. All aerators, strainers, and hoses will be removed from the tap prior to sample collection. The flow will be adjusted so that a gentle stream is obtained. To minimize volatilization, a flow rate of less than 100 milliliters per minute is recommended for samples to be analyzed for VOCs.

At each sampling location, sample bottles designated for a particular analysis will be filled sequentially before bottles designated for other analyses are filled. Vials for VOCs will be filled first to minimize aeration of water in the well. All vials for VOCs will be provided, pre-preserved by the subcontract laboratory. The vials will be filled directly from the tap. Each vial will be inverted and checked for air bubbles and checked for headspace. If a pea-size or larger air bubble appears, the cap can be removed and additional sample added to eliminate the air space. If there is any likelihood of contamination being introduced into the sample, the vial contents will be emptied into the container used to measure purge volumes, the vial discarded, and a new sample collected in a new vial.

If a duplicate sample is to be collected, all sample bottles designated for a particular analysis for both duplicates will be filled sequentially before bottles for another analysis are filled. For example, duplicate samples will be collected sequentially for semivolatile organic compounds (SVOC), followed by duplicate samples collected sequentially for metals. EPA recommends the following collection order:

1. Volatile organic compounds and total organic compounds
2. Dissolved gasses and total organic carbon
3. Semivolatile compounds – Acid/Base extractables, pesticides, and PCBs
4. Metals and general chemistry
5. Radionuclides

It is considered good management practice to plan sample collection from the least to the most contaminated area of the site to decrease the risk of cross contamination (assuming no other factors that drive the priority of sampling location order).

Groundwater samples will be transferred from the bailer, tap, or pump tubing directly into the appropriate pre-preserved sample containers, if required. When transferring samples, care must be taken not to touch any nondedicated equipment to the sample container. The containers will be chilled and processed for shipment to the laboratory.

3.3 Equipment Decontamination

See project specific SOPs for procedure. Sampling equipment must be consistently decontaminated to ensure the quality of the samples collected. All equipment that comes into contact with potentially contaminated soil or water samples will be decontaminated. Disposable equipment intended for one use will not be decontaminated but will be packaged for appropriate disposal. In addition, equipment that is dedicated for repeated use at only one location does not need to be decontaminated. Equipment decontamination will occur prior to each use.

The following decontamination sequence is recommended:

1. Nonphosphate detergent and tap water wash, using a brush if necessary
2. Tap water rinse
3. Two rinses with deionized/distilled water

4. Organic-free water rinse (high-performance liquid chromatography grade) for organic samples

Large and bulky sampling equipment might need to be steam cleaned. Equipment will be decontaminated in a predesignated area on pallets or plastic sheeting. The cleaned equipment will be wrapped or covered to prevent contamination and stored in an uncontaminated area.

3.4 Disposal of Investigation-derived Wastes

The disposal of investigation-derived waste (IDW) should be addressed in the project-specific SAP. Each project or task can have different IDW disposal requirements, depending on site-specific conditions and the work performed. The following potentially contaminated IDW might be generated during field activities:

- **Used personal protective equipment (PPE) and disposable equipment.** Used PPE will be double-bagged and placed in a municipal refuse dumpster onsite. PPE and disposable equipment that is still serviceable will be rendered unusable before disposal into the dumpster.
- **Decontamination fluids.** Decontamination fluids include dilute nitric acid, deionized water, residual contaminants, and water with nonphosphate detergent. These fluids will be collected and disposed of in accordance with site requirements and applicable regulatory requirements
- **Soil cuttings.** Soil cuttings generated during subsurface sampling will be collected and disposed of in accordance with site requirements and applicable regulatory requirements.
- **Purged groundwater and excess groundwater collected for sample container filling.** These wastes will be collected and disposed of in accordance with site requirements and applicable regulatory requirements.

Each project SAP should address IDW. Any samples collected for waste characterization should include IDW in the sample identifier (ID).

3.5 Field Quality Control Samples

QC samples will be collected to monitor accuracy, precision, and the potential presence of field contamination for analytical methods to be performed in the offsite laboratory. All field QC samples, except matrix spike/matrix spike duplicates (MS/MSD), will be sent blind to the laboratory along with regular field samples. These blind samples will be labeled similar to regular field samples to disguise them. Sampling frequencies may vary according to the project needs, as defined in the project-specific SAP or QAPP addendum. The recommended frequency of collection for QC samples is discussed in the following sections and should be reviewed and updated to achieve project-specific DQOs.

3.5.1 Field Duplicate Samples

A field duplicate (FD) is an independent sample collected as close as possible to the original sample, from the same source, and under identical conditions. FDs are used to document sampling and analytical precision. FDs will be collected at a minimum frequency of 10 percent or one per sampling event, whichever is more frequent, for each matrix and type of analysis. The sampling procedures described in Section 3.2 will be followed. The sampling locations for FD samples will be recorded in the field logbook or field sampling form, or both.

3.5.2 Equipment Blanks

Equipment blanks (EB) will be collected to evaluate field sampling and decontamination procedures by pouring deionized or organic free water over the decontaminated equipment. EBs will be collected at a frequency of one EB per day for each non-dedicated equipment type per sampling team. The EBs will be preserved, packaged, and shipped in the same manner described for the environmental samples. A separate sample ID will be assigned to each EB sample, and the sample will be submitted blind to the laboratory. EBs will be analyzed in the offsite laboratory for the same parameters specified for the corresponding matrix or for the main contaminate of potential concern (COPC).

3.5.3 Field Blanks

Field blanks (FB) (also known as ambient blanks [AB]) are collected to evaluate (or to monitor) whether contaminants have been introduced during sampling because of ambient conditions. FBs will be collected by pouring deionized water (or organic free water for organic samples) into a sample container at the sampling location and leaving the sample exposed to the atmosphere during the time a sample is collected. FBs will be collected at a frequency of one per location that warrants concern because of environmental conditions or project-specific QC concerns, as determined by the project chemist or project manager. Generally, FBs need to be collected if the analyte concentrations are high enough to allow mobile contaminants to affect the sample results and field conditions such as upwind environments cannot be controlled. FB will be analyzed for the same parameters specified for the associated samples.

3.5.4 Trip Blanks

Trip blanks (TB) are used to monitor contamination during sample shipping and handling and for cross contamination through VOC migration among the collected samples. They are prepared in the laboratory by pouring American Society for Testing and Materials (ASTM) Type II or organic-free water into a VOC sample container. They are then sealed, transported to the field, stay sealed while VOC samples are taken, and transported back to the laboratory in the same cooler as the VOC samples. One TB should accompany each VOC sample cooler.

3.5.5 Matrix Spike/Matrix Spike Duplicate

A MS/MSD consists of duplicate field sample aliquots spiked by the laboratory with analytes of concern to evaluate the effects of the matrix on the recoveries of these analytes. For every 20 field samples of each matrix collected at each site, additional duplicate aliquots

of one of the samples should be collected for each analysis and designated on the CoC form for use as an MS/MSD by the laboratory. Separate line entries are not required for matrix spikes. The increased number of sample containers should be noted. The duplicate aliquots for MS/MSD analyses should be collected simultaneously or in immediate succession with the parent sample. They will be treated in exactly the same manner as the parent sample during storage and shipment. The sampling locations for the MS/MSD will be documented in the field logbook or the field sampling form, or both if the MS/MSD are specifically requested by the project; if not, document the extra volume on the CoC and in the field logbook or on the field sampling form.

3.5.6 Split Samples

Split samples may be collected periodically for comparison of data between analytical laboratories. A split sample is collected from a thoroughly homogenized original sample and is used to document analytical precision. Split samples will be collected for each matrix and for each analytical method, except those for volatiles when project objectives dictate the need. The sampling procedures described in Section 3.2 or those described in the project- or site-specific SAPs or QAPP addenda will be followed. The sampling locations will be recorded in the field logbook or field sampling form, or both. Split samples will be sent to a second certified laboratory, and results will be compared with those from the primary laboratory.

SECTION 4

Sample Handling and Custody

4.1 Sample Documentation and Tracking

Projects with large sampling events should take advantage of the field database to provide a PST, CoCs, and sample container labels. The use of Mobil Integrated Sample Tracking (MIST) and the field database are recommended. All projects must keep sample documentation.

The laboratories will provide pre-preserved sample containers with labels identifying the preservative, unless approved by the project chemist. Laser-printed labels and indelible ink pens will be used whenever possible to complete sample labels. Immediately prior to sample collection, the sample ID, date, time of sampling and sampler's initials will be recorded onto the waterproof label. Samples will be placed into resealable bags, and ice used in shipping containers double bagged. Vital information regarding the collection of each sample will be recorded into a field logbook, field sampling form, or CoC form.

A separate logbook will be used for each project. It will be bound with consecutively numbered pages. All entries will be legibly written in black ink and signed and dated by the individual making the entries. Factual and objective language will be used. All entries will be complete and accurate to allow reconstruction of each field activity. A line will be placed through any portion of a field notebook that is unused. One line strike-through will be used to show corrections to entries. The strike-through will be initialed and dated. No correction fluid will be used. The following information for each sample will be recorded into the field logbook, field sampling form, or CoC form, whichever is appropriate:

- Sampling location and description. (Sketch and measured distances from reference points will be recorded if there is no established identification for the sample location.)
- Sample ID.
- Sampler's name.
- Date and time of sampling.
- Sample designation as composite or grab.
- Sample matrix.
- Type and ID of sampling equipment.
- Field measurement data (e.g., pH, temperature, conductivity).
- Field observations that may be relevant to the analysis or sample integrity (e.g., odor, color, and weather conditions).
- Associated QC blanks.

- Preservative used.
- CoC form number, custody seal number, and lot numbers of sample containers (when appropriate).
- Shipping details. (If the laboratory is providing courier service, the courier must sign and date the CoC forms. Copies of the signed CoC forms should be transmitted to the office as soon as practical. If Federal Express, United Parcel Service, or other courier is used, include shipping information for each shipment.)
- Destination laboratory.

4.2 Containers and Preservatives

The contracted analytical laboratory will provide the required sample containers for all samples including QC samples. All sample containers for PG&E projects will be pre-cleaned and certified to EPA standards. No sample containers will be reused. The contracted laboratory will add preservatives, if required, prior to shipping the sample containers to the field or supply the preservative as appropriate. The laboratory, upon receipt of the samples, will verify and record the adequacy of preservation and will add additional preservative, if necessary. For VOCs, the sample label or CoC will indicate the presence of preservative and the laboratory will verify and record the pH after the analysis. The containers, minimum sample quantities, required preservatives, and maximum holding times for many parameters are shown in Table 4-1 (tables appear at the end of the section in which they are first referenced). The project- or site-specific SAP or QAPP addendum will contain the specific containers required for each project if they differ from the containers listed in Table 4-1.

4.3 Chain-of-Custody

Collecting data of known quality begins at the point of sample collection. Legally defensible data are generated by using proven evidentiary procedures. These procedures are described in the following sections and must be followed to preserve and ensure the integrity of all samples from the time of collection through analysis. Sample custody records must be maintained in the field and subcontractor laboratory. A sample is considered to be in custody if it is either in physical possession or view, locked up, or kept in a secured and restricted area. Until the samples are shipped, custody will be the responsibility of the sampling team leader.

CoC forms document sample collection and shipment to the laboratory. CoC form(s) will be completed for each sampling event. The original copy will be provided to the laboratory with the sample shipping cooler, and a copy will be retained in the field documentation files. The CoC form will identify the contents of each shipment and maintain the custodial integrity of the samples. All CoC forms will be signed and dated by the responsible sampling team personnel, as applicable. The “Relinquished By” field will be signed by the responsible sampling team personnel, with the date, time, and air bill number noted on the CoC form. The laboratory will provide a PDF copy of the CoC forms, with the sample login information included, within 48 hours of sample receipt, along with information related to

the condition of receipt of the samples. The laboratory will also include the original or a copy with the final hardcopy report (the final "hardcopy" can be in a paper or PDF format or both, depending on project-specific requirements).

A self-adhesive custody seal will be placed across the lid and side of each sample to maintain its integrity until the laboratory opens it. The shipping coolers containing the samples will be sealed with a custody seal any time they are not in an individual's possession or view before shipping. All custody seals will be signed and dated by the responsible sampling team personnel.

At a minimum, the CoC form must include the following information:

- Project information such as project number or identification of investigation monitoring program, Project Manager, etc.
- Unique sample ID
- Date and time of sample collection
- Source of sample (including name, location, sample type, and matrix)
- Number of containers
- Designation of MS/MSD (if applicable)
- Preservative used
- Analyses required
- Name of sampler
- Custody transfer signatures, dates, and times of sample transfers from the field to transporters and to the laboratories
- Bill of lading or transporter tracking number (if applicable)

4.4 Laboratory Responsibilities

After the samples reach the laboratory, they shall be checked against information on the CoC form for anomalies. The condition, temperature, and appropriate preservation of samples shall be checked and documented on the CoC form or a sample receipt checklist. Checking an aliquot of each sample container, at the time of receipt, using litmus paper is an acceptable procedure to determine the pH of all sample containers received, except VOCs. The pH check should be conducted in the sample receiving area or in the appropriate laboratory department. Samples for VOC analysis require that the pH check be performed after the vial has been opened for analysis; the pH shall be recorded at the time of analysis in the department log books. Anomalies in the received samples and their resolution shall be documented in laboratory records and summarized in the final analytical report case narrative. All sample information shall then be entered into a tracking system, and unique analytical sample IDs shall be assigned. A copy of this information shall be reviewed by the laboratory for accuracy. Sample holding time tracking begins with the collection of samples and continues until the analysis is complete.

Samples not preserved or analyzed in accordance with the requirements in this QAPP or the project-specific SAP or QAPP addendum may be resampled and analyzed at no additional cost to CH2M HILL. Any subcontracted analyses shall be documented on a CoC form by the laboratory and noted in the case narrative. Internal laboratory CoC procedures shall also be documented and implemented by the laboratory. Sample custody within the laboratory will, at a minimum, include storage of samples in a secure, restricted access area when not in use; samples must be checked out and checked back in by the analysts who use them. Internal custody records must be maintained by the laboratory as part of the documentation file for each sample. Specific instructions concerning the analysis specified for each sample shall be communicated to the analysts. Analytical batches shall be created, and laboratory QC samples shall be introduced into each batch.

While in the laboratory; samples shall be stored in controlled-access, temperature-applicable areas. Refrigerators, coolers, and freezers shall be monitored for temperature 7 days a week. Acceptance criterion for the temperatures of the refrigerators and coolers is 4°C ±2°C. Acceptance criterion for the temperatures of the freezers shall be between -7°C and -20°C. All of the cold-storage areas shall be monitored by using thermometers that have been calibrated with a National Institute of Standards and Technology approved traceable thermometer. As indicated by the calibration results, correction factors shall be applied to each thermometer.

Records that include acceptance criteria shall be maintained. Samples for volatile organics analysis shall be stored separately from other samples, standards, and sample extracts. Samples shall be stored after analysis until disposed of in accordance with applicable local, state, and federal regulations. Disposal records shall be maintained by the laboratory.

The following information shall be documented on the CoC form, the sample receipt form, or the sample login form (or on more than one of these forms, as applicable):

- Date samples received
- CH2M HILL sample ID
- Laboratory sample ID
- Analytical tests requested for the sample batch
- Sample matrix
- Number of samples in the batch
- Container description and location in the laboratory
- Verification of sample preservation

All of the information must be retained and traceable in the laboratory sample tracking system, with summary information provided in the analytical reports.

SOPs describing sample control and custody shall be maintained by the laboratory.

4.5 Sample Packaging and Transport

The following sections provide guidelines for sample packaging and transport that may be superceded, amended, or replaced in the project- or site-specific SAPs or QAPP addenda.

4.5.1 Sample Container Preparation

The following procedures shall be implemented:

- Labels will be checked for completeness and comparability with the COC.
- Container lids will be checked for tightness; if the container is not full, the sampler will note the COC, field notebook, or field sampling form.
- Sample bottles will be double-bagged in heavy-duty plastic. Glass sample containers will be covered with bubble wrap to prevent breakage.

4.5.2 Shipping Cooler Preparation

The following procedures shall be implemented:

- All previous labels and broken custody seals used on the sample shipping cooler will be removed.
- Drain plugs will be sealed with fiberglass or similar tape (outside and inside) to prevent melting ice from leaking.
- A cushioning layer of packing material, such as bubble wrap (approximately 1 inch thick), will be placed at the bottom of the cooler to prevent breakage during shipment.
- The cooler will be lined with a large plastic bag (same type used to contain samples).
- All ice will be double-bagged in zip-lock plastic bags.

4.5.3 Placing Samples in the Cooler

The following procedures shall be implemented:

- The CoC form will be placed in a zip-lock bag and taped inside the top of the cooler if shipment is to be made through commercial carrier.
- Samples will be placed in an upright position in the cooler. Sample containers will never be placed onto their side, except for a soil VOC that is to be frozen.
- Ice will be placed on top of samples and between samples. Ideally, ice will be placed in resealable plastic bags in duplicate to minimize leakage of ice melt into the cooler.
- Void space between samples should be filled with packing material or ice packs (vermiculite is not acceptable packing material unless required by DOT).

4.5.4 Closing the Cooler

The following procedures shall be implemented if the cooler is to be shipped by commercial carrier:

- The cooler lid will be taped with strapping tape, encircling the cooler several times.
- Custody seals should also be affixed to the cooler lid to further ensure the integrity of the samples. Custody seals should be initialed and dated.

4.5.5 Transport

Sample coolers will be transported to the laboratory immediately after sample collection. An overnight courier may be used to transport the samples. Intermediate stops should be avoided, except for emergencies, in which case, the situation should be noted in the field notebooks. The laboratory should be notified that samples are being shipped.

TABLE 4-1
Sample Containers, Preservation, and Holding Times
PG&E Program Quality Assurance Project Plan

Analyte	Method	Container and Minimum Quantity		Preservation	Holding Time
		Water	Soil/Sediment		
Metals (except hexavalent chromium)	SW6010B or C, SW6020A, EPA200.7, EPA200.8, SM3120B, EPA245.1, SW7000 series methods	1-liter P or G	8-oz/P, G, or T	Water: Add HNO_3 to pH<2; soil/sediment: None	28 days for mercury; 180 days for all others
Hexavalent Chromium	SW7199		4-oz/P, G, or T	Soil/sediment: Chill to 4°C (±2°C)	Soil: 30 days to extraction, 7 days to analysis
Hexavalent Chromium	EPA218.6	250-ml P	Not applicable	chill to ≤6°C Laboratory or field filtration within 24 hours. After filtration adjust the pH to 9–9.5 by adding $(NH_4)_2SO_4$/ NH_4OH buffer solution	28 days
Hexavalent Chromium	SM3500-Cr B	250-ml P	Not applicable	chill to ≤6°C Laboratory or field filtration within 24 hours. After filtration adjust the pH to 9–9.5 by adding $(NH_4)_2SO_4$/ NH_4OH buffer solution	28 days
Purgeable TPH	SW8015B, C or D Preparation methods: SW5035B (soil) SW5030B (water)	Three 40-ml G-TLC	Three 40-ml G-TLC	Water: Add HCl to pH<2; chill to 4°C (±2°C) Soil/sediment: Chill to 4°C (±2°C) or: • Frozen in 48 hours • Frozen onsite • Sodium bisulfate • Methanol	Water: 14 days (preserved); 7 days (unpreserved) Soil: 48 hours unless preserved within 48 hours 14 days if solid samples preserved by the following methods: • 4ºC/frozen in 48 hours • Frozen onsite • Sodium bisulfate • Methanol

TABLE 4-1
Sample Containers, Preservation, and Holding Times
PG&E Program Quality Assurance Project Plan

Analyte	Method	Container and Minimum Quantity		Preservation	Holding Time
		Water	Soil/Sediment		
Extractable TPH	SW8015B, C or D	Two 1-liter G	8-oz/G or T	Chill to 4°C (±2°C)	Water: 7 days to extraction; 40 days to analysis Soil: 14 days to extraction; 40 days to analysis
Pesticides	SW8081A or B	Two 1-liter G	8-oz/G or T	Chill to 4°C (±2°C)	Water: 7 days to extraction; 40 days to analysis Soil: 14 days to extraction; 40 days to analysis 90 days to extraction if frozen to -10°C (±2°C)
PCB	SW8082 or SW8082A	Two 1-liter G	8-oz/G or T	Chill to 4°C (±2°C)	Water: 7 days to extraction; 40 days to analysis Soil: 14 days to extraction; 40 days to analysis 90 days to extraction if frozen to -10°C (±2°C)
VOCs	SW8260B or C Preparation methods: SW5035B (Soil) SW5030B (Water)	Three 40-ml G-TLC	Three 40-ml G-TLC	Water: Add HCl to pH<2; chill to 4°C (±2°C) Soil/sediment: Chill to 4°C (±2°C) or: • Frozen in 48 hours • Frozen onsite • Sodium bisulfate • Methanol	Water: 14 days (preserved); 7 days (unpreserved) Soil: 48 hours unless preserved with 48 hours 14 days if solid samples preserved by the following methods: • 4ºC/frozen in 48 hours • Frozen onsite • Sodium bisulfate • Methanol
SVOC	SW8270C or D	Two 1-liter G	8-oz G or T	Chill to 4°C (±2°C)	Water: 7 days to extraction; 40 days to analysis Soil: 14 days to extraction; 40 days to analysis
Herbicides	SW8151A	Two 1-liter G	8-oz G or T	Chill to 4°C (± 2°C)	Water: 7 days to extraction; 40 days to analysis Soil: 14 days to extraction; 40 days to analysis

TABLE 4-1
Sample Containers, Preservation, and Holding Times
PG&E Program Quality Assurance Project Plan

Analyte	Method	Container and Minimum Quantity		Preservation	Holding Time
		Water	Soil/Sediment		
PNA	SW8270SIM	Two 1-liter G	8-oz G or T	Chill to 4°C (±2°C)	Water: 7 days to extraction; 40 days to analysis Soil: 14 days to extraction; 40 days to analysis
Carbon Dioxide, Methane, Ethane, and Ethane	RSK-175	Three 40-ml G-TLC	Not applicable	Add HCl to pH<2; chill to 4°C (±2°C)	Water: 14 days
Carbon Dioxide	SM5400-CO2	1-liter P or G		≤6°C	14 days
Ammonia	EPA350.1 Revision 2 or SM4500-NH3	1-liter P or G	4-oz P, G, or T	Water: Add H_2SO_4 to pH<2; chill to ≤6°C Soil/sediment: 4°C (±2°C)	Water: 28 days Soil: Not available
Anions	EPA300.0 or SM4500	500-ml P or G	4-oz P, G, or T	Chill to ≤6°C (none required for chloride and fluoride) ortho-Phosphate requires filtering within 15 minutes after sample collection	Bromide, chloride, fluoride, sulfate, and iodide in 28 days Nitrate and ortho-Phosphate in water 48 hours
Metabolic Acids	EPA300.M	500-ml P or G		Chill to ≤6°C	Water: 28 days
Alkalinity (total, bicarbonate, carbonate, hydroxide)	EPA310.2 or SM2320 B	500-ml P or G		Chill to ≤6°C	14 days
TDS	SM2540 C	500-ml P or G		Chill to ≤6°C	7 days
TSS	SM2540 D	500-ml P or G		Chill to ≤6°C	7 days
Turbidity	EPA180.1 Revision 2 or SM2130	500-ml P or G		Chill to ≤6°C	48 hrs
Color	SM2120 E	125-ml P or G		Chill to ≤6°C	48 hours
Specific Conductance	EPA120.1 Revision 1, or SM2510 SW9050	500-ml P or G	4-oz P, G, or T	Chill to ≤6°C Soil/sediment: Chill to 4°C (±2°C)	28 days
Hardness	SM2340 B or C	500-ml P or G		Chill to ≤6°C	6 months
pH	SM4500H+B or SW9040	500-ml P or G	4-oz P, G, or T	Chill to ≤6°C	15 minutes
BOD	SM5210 B	500-ml P or G		Chill to ≤6°C	48 hours

TABLE 4-1
Sample Containers, Preservation, and Holding Times
PG&E Program Quality Assurance Project Plan

Analyte	Method	Container and Minimum Quantity		Preservation	Holding Time
		Water	Soil/Sediment		
TOC/DOC	SM 5310 C	500-ml G or 40-ml VOA	4-oz P, G, or T	Water: For 500-ml: Add H_2SO_4 to pH<2; chill to ≤6°C For 40-ml VOA: Add H_2PO_4 to pH<2; chill to ≤6°C	28 days
TOC	Walkley Black	Not applicable	4-oz P, G, or T	Chill to ≤6°C	28 days
Perchlorate	EPA314.0	500-ml P or G	4-oz P, G, or T	Chill to ≤6°C	28 days
Sulfide	SM4500-S²	500-ml P or G		Add zinc acetate and NaOH to pH>9, chill to ≤6°C	7 days
Acid Volatile Sulfide	E821/R-91-100	Check with Laboratory prior to sample collection			
TKN	EPA351.1/2 or SM4500	500-ml P or G	4-oz P, G, or T	Add H_2SO_4 to pH<2; chill to Chill to ≤6°C	28 days
Ferrous Iron (Fe +2)	SM3500D	500-ml P or G		Chill to ≤6°C	24 hours
Dissolved Silica	EPA200.7 or SM4500-Si or SM3120 B	500-ml P only		Chill to ≤6°C	28 days
18 O and deuterium	Laboratory SOP (continuous flow mass spectrometer – CF-IRMS)	100-ml P or 40-ml VOA		Chill to ≤6°C	6 months
Cyanide	EPA335.4 (R1) or SM4500-CN C/D/E (water) SW9010B, SW9012, or SW9014 (soil)	500-ml P or G	4-oz P, G, or T	Water: Add NaOH to pH>12; chill to ≤6°C Soil/sediment: Chill to 4°C (±2°C)	Water and soil: 14 days
Gross Alpha	SM7110C	500 ml P or G		Add HNO_3 to pH<2	6 months
Gross Beta	E900.0	500-ml P or G		Add HNO_3 to pH<2	6 months
Radium-226	E903.1	500-ml P or G	4-oz P, G, or T	Add HNO_3 to pH<2; soil/sediment: None	6 months
Radium-228	E904.0	500-ml P or G	4-oz P, G, or T	Add HNO_3 to pH<2; soil/sediment: None	6 months
Strontium	E905.0	500-ml P or G	4-oz P, G, or T	Add HNO_3 to pH<2; soil/sediment: None	6 months
Tritium	E906.0	500-ml P or G	4-oz P, G, or T	Add HNO_3 to pH<2; soil/sediment: None	6 months
Uranium	R908.0 or 200.8	500-ml P or G	4-oz P, G, or T	Add HNO_3 to pH<2; soil/sediment: None	6 months

TABLE 4-1
Sample Containers, Preservation, and Holding Times
PG&E Program Quality Assurance Project Plan

Analyte	Method	Container and Minimum Quantity		Preservation	Holding Time
		Water	Soil/Sediment		
Dioxins and furans	SW8290	Two 1-liter Amber G	8-oz G	Chill to 4°C (±2°C)	Water and Soil: 30 days to extraction; 45 days after extraction to analysis Soils: 365 days to extraction if frozen to -10°C (±2°C)
Dioxins and furans (Drinking water)	EPA1316B	Two 1-liter Amber G		Chill to 4°C (±2°C)	7 Days to extraction 40 days after extraction to analysis
Asbestos	Water: EPA 100.1/100.2-TEM	1-liter sonicated P		Chill to 4°C (±2°C)	Water: 48 hour holding time
	Soil: PLM/BULK (present/absent); CARB435/PLM; TEM		4-oz G	Chill to 4°C (±2°C)	Soil: I year

TABLE 4-1
Sample Containers, Preservation, and Holding Times
PG&E Program Quality Assurance Project Plan

Analyte	Method	Container and Minimum Quantity: Water	Container and Minimum Quantity: Soil/Sediment	Preservation	Holding Time

Notes:

>	=	greater than
<	=	less than
≤	=	less than or equal to
BTEX	=	benzene, toluene, ethylbenzene, and xylene
CF-IRMS	=	continuous-flow isotope ratio mass spectrometry
DOC	=	dissolved organic compounds
G	=	glass
G-TLC	=	glass with teflon-lined cap
H_2PO_4	=	phosphoric acid
H_2SO_4	=	sulfuric acid
HCl	=	hydrochloric acid
HNO_3	=	nitric acid
NaOH	=	sodium hydroxide
NH_4	=	ammonium
NH_4OH	=	ammonium hydroxide
$(NH_4)_2SO_4$	=	ammonium sulfate
oz	=	ounce
P	=	polyethylene
PCB	=	polychlorinated biphenyls
PLM	=	Polarized light microscopy
PNA	=	polynuclear aromatic hydrocarbons
SIM	=	selected ion monitoring
SO_4	=	sulfate
T	=	brass sleeves in the sample barrel (sometimes called California brass)
TDS	=	total dissolved solids
TEM	=	Transmission Electron Microscopy
TKN	=	total kjeldahl nitrogen
TLC	=	teflon lined closure
TOC	=	total organic compounds
TPH	=	total petroleum hydrocarbons
TSS	=	total suspended solids

SECTION 5

Method Quality Objectives and Quality Assurance Program

Programmatic method quality objectives (MQOs) are defined in this section but may differ in individual projects, as specified in the project-specific QAPP addenda. MQOs are the basis for ensuring that the quality of the data collection meets the project-specific DQOs of the plan. They specify the type, quality, and quantity of QA/QC data to be collected and how the data are to be used to make the appropriate decisions for the project. The final output of the data must meet the qualitative and quantitative needs of the project.

5.1 Data Categories

Both screening and definitive data may be generated. Screening data are generated by rapid analytical methods, and calibration and QC requirements are less rigid than those required for definitive data. Quantitation from a screening method is usually imprecise. Definitive data are generated by rigorous analytical methods using standardized calibration and QC and are reported on specified deliverables. The data are analyte-specific, and both identification and quantitation are confirmed.

In general, screening data will be confirmed by definitive data for use in decision making for the PG&E Program. However, screening data may be used for decision making purposes on a project-specific basis, depending upon the DQOs. The project-specific documents will describe the advantages of collecting screening data that might be less precise but will more adequately define the characteristics of the site by increasing the number of samples collected. This approach can reduce overall error in the data collection process.

5.2 Precision, Accuracy, Representativeness, Completeness, and Comparability

Data quality will be evaluated for precision, accuracy, representativeness, completeness, and comparability (PARCC). Both definitive and screening data will be subject to PARCC requirements. PARCC objectives for screening methods may be identical to those for definitive data, or they may be less stringent depending on the project-specific objectives. Sampling frequencies may vary according to the project needs, as defined in the project-specific SAPs or QAPP addenda.

5.2.1 Precision

Precision is a measure of reproducibility of analytical results. It can be defined as the degree of mutual agreement among individual measurements obtained under similar conditions. Total precision is a function of the variability associated with both sampling and analysis. Precision will be evaluated as the relative percent difference (RPD) between field duplicate

sample results or between the MS and MSD results. Field duplicates will comprise 10 percent of the sampling effort. MS/MSD samples will be analyzed at a 5-percent frequency. The MS/MSD samples will be field designated, if so required by project specific requirements. Laboratory-generated precision control limits can be used for data evaluation; however, all precision control limits listed in Appendix A and Tables 5-3 through 5-15 must be met.

5.2.2 Accuracy

Accuracy is the degree of agreement between a measured value and the "true" or expected value. It represents an estimate of total error from a single measurement, including both systematic error, or bias, and random error that may reflect variability due to imprecision. Accuracy is evaluated in terms of percent recovery (%R) determined from results of MS/MSD and laboratory control sample (LCS) analyses. Surrogate recoveries from samples analyzed for organic parameters are also used to assess accuracy. Laboratory-generated accuracy control limits can be used for data evaluation; however, the accuracy control limits listed in Appendix A and Tables 5-3 through 5-15 must be met.

5.2.3 Representativeness

Representativeness is the degree to which sample data accurately reflect the characteristics of a population of samples. It is achieved through a well-designed sampling program and by using standardized sampling strategies and techniques and analytical procedures. Factors that can affect representativeness include site homogeneity, sample homogeneity at a single point, and available information around which the sampling program is designed.

5.2.4 Completeness

Completeness is the number of valid measurements compared with the total number of measurements generated. Completeness will be determined for each method, matrix, and analyte combination. The completeness goals of each project are optimized to meet the DQOs. The goals for the PG&E Program are 95 percent for aqueous samples and 90 percent for soil samples.

5.2.5 Comparability

Comparability is the confidence with which one data set can be compared to another. It is achieved by maintaining standard techniques and procedures for collecting and analyzing samples and reporting the analytical results in standard units. Results of performance evaluation samples and systems audits will provide additional information for assessing comparability of data among subcontracting laboratories.

5.3 Method Detection Limits, Reporting Limits, and Instrument Calibration Requirements

5.3.1 Method Detection Limits

The method detection limit (MDL) is the minimum concentration of a substance that can be measured and reported with 99 percent confidence that the analyte concentration is greater

than zero. Each participating laboratory will determine the MDL for each method, matrix, and analyte for each instrument that will be used to analyze samples. The MDLs will be initially determined prior to analyzing samples and again at least once every 12 months; a quarterly MDL verification can be substituted for the annual MDL study. The following steps should be followed:

1. Estimate the MDL using one of the following:
   - The concentration value that corresponds to an instrument signal/noise ratio in the range of 2.5 to 5
   - The concentration equivalent of three times the standard deviation of replicate measurement of the analyte in reagent water
   - The region of the standard curve where there is a significant change in sensitivity (i.e., a break in the slope of the standard curve)
2. Prepare (e.g., extract and digest) and analyze seven samples of an MS (ASTM Type II water for aqueous methods; Ottawa sand for soil methods; 1-mm glass beads, or smaller, for metals) containing the analyte of interest at a concentration three to five times the estimated MDL.
3. Determine the variance for each analyte by using Equations 1 and 2:

$$S^2 = \frac{1}{n-1}\left[\sum_{i=1}^{n}\left(x_i - \bar{x}\right)^2\right] \quad (1)$$

where:

S^2 = variance
x_i = the nth measurement of the variable x and
$\bar{x}$ = the average value of x

$$\bar{X} = \frac{1}{n}\sum_{i=1}^{n} x_i \quad (2)$$

4. Determine the standard deviation(s) for each analyte by using Equation 3:

$$s = (S^2)^{1/2} \quad (3)$$

5. Determine the MDL for each analyte by using Equation 4:

$$MDL = 3.14(s) \quad (4)$$

   Note: 3.14 is the one-sided t-statistic at the 99-percent confidence level appropriate for determining the MDL using seven samples.

6. If the spike level used in Step 2 is more than 10 times the calculated MDL, repeat the process using a smaller spiking level.

CH2M HILL requires a verification check be performed on the calculated MDLs for each target compound (AFCEE, 2006). The MDL check standard shall be spiked at approximately two times the current reported MDL. The MDL is verified if the check standard produces a

response at least 3 times above the instrument's noise level and greater than the blank associated with the MDL verification study. If the verification response is too low, spike at a successively higher concentration until verification criteria are met, and use the first successful concentration as the reported MDL. The MDL verification check will be sent to CH2M HILL for review and approval.

5.3.2 Reporting Limits

In general, RLs must be greater than two times the calculated MDL. RLs used by the laboratory should not be greater than the reporting limit objectives listed in Appendix A.

When calibrating instruments, a standard at a concentration equal to or less than the RL must be included. In the project-specific SAP or QAPP addendum, reporting of analytical data will be addressed. One of the following options will be selected when establishing reporting requirements for each project:

- Analytes at concentrations greater than the laboratory MDL but less than the RL will be flagged "J" and reported as an estimate. Analytes that are not detected at or above the laboratory MDL will be flagged "U" and reported as not detected at the RL.
- Only analytes at a concentration greater than the project-specific RL will be reported. Analytes detected at less than the RL will be flagged "U" and reported as not detected at the RL.

For consistency, RLs and sample results shall be reported to two significant figures if less than 10 micrograms per liter (µg/L) (parts per billion) and to three significant figures otherwise.

RLs shall be reported on a dry-weight basis for soil samples.

5.3.3 Instrument Calibration

Laboratory instruments shall be calibrated by qualified personnel prior to sample analysis according to the procedures specified for each method. Calibration shall be verified at method-specified intervals throughout the analysis sequence. The frequency and acceptance criteria for calibration are specified for each analytical method in Tables 5-3 through 5-15, with supplemental requirements defined in the following sections for organic methodologies. When multipoint calibration is specified, the concentrations of the calibration standards should bracket those expected in the samples. Samples should be diluted, if necessary, to bring analyte responses within the calibration range. Data that exceed the calibration range cannot be reported by the laboratory. The initial calibration (ICAL) curve shall be verified as accurate with a standard purchased or prepared from an independent second source. ICAL verification involves the analysis of a standard containing all the target analytes, typically in the middle of the calibration range, each time the ICAL is performed. Quantitation based on extrapolation is not desirable.

Calibration requirements

In the initial calibration (for all instruments), a standard at a concentration equal to or less than the RL must be included.

Initial calibration must be re-established if the following conditions exist:

- The last calibration was established more than 1 year prior to the start of a sample's analysis [gas chromatography, gas chromatography-mass spectrometry, inductively coupled plasma, and inductively coupled plasma-mass spectrometry (ICPMS)]
- The last calibration was established more than 2 weeks prior to the start of a sample's analysis for hexavalent chromium by ion chromatography.
- Two consecutive continuing calibration standards fail
- The operating conditions change; for example, any of the following:
  - Major maintenance is performed
  - The fluid or gas "carrier" type changes
  - The instrument requires relocation
  - The analytical column is replaced

5.3.3.1 Initial Calibration Models for the Determination of Organic Compounds

Organic methodologies often provide multiple options for ICAL curve fits and associated acceptance criteria for use. The following sections describe the required laboratory practices that will be employed by the laboratory. The hierarchy that the laboratory will use when selecting the calibration curve fit for use in quantitation of sample results is described in the following section.

Calibration Techniques. The following procedures will be implemented:

- The analyst will verify that correct instrument operating conditions and routine maintenance as specified in the method and laboratory SOP are employed. All maintenance activities will be documented in a laboratory notebook for troubleshooting and scheduling of future routine, periodic maintenance.
- Ensure that the instrument is free of contamination prior to calibration. **Do not** perform any blank subtraction.
- The entire ICAL must be performed and meet method performance criteria prior to sample analyses. The calibration standards must be analyzed in sequential order from the lowest to highest concentration. If **one** calibration standard fails to meet criteria, it may be reanalyzed at the end of the calibration sequence. Justification for removing a calibration point from the selected curve fit includes circumstances such as, improper purge, injection failure, nonspiked level, or other obvious failures. The failure of multiple standards suggests an instrument problem or operator error and corrective action is required.
- Only the lowest or the highest calibration points can be removed from the calibration curve without justification. If the lowest calibration point is removed, the RL for that compound increases to the level of the next lowest calibration point. Approval to elevate RLs greater than the project-specific objectives **must** be approved by the program or project chemist. If the highest calibration point is removed, the linear range is shortened for that compound.

- The lowest calibration point in the calibration curve must be at or below the required RL.
- The other standard concentrations must define the working range of the instrument or the expected range of concentrations found in the samples.
- Either external or internal calibration can be employed for methods not involving mass spectrometry detectors. Internal calibration must be used when a mass spectrometry detector is employed.
- A minimum of five calibration points must be used for the calibration curve for gas chromatography/mass spectrometry and gas chromatography methods.
- Most compounds tend to be linear, and a linear approach should be favored when linearity is suggested by the calibration data. Nonlinear calibration should be considered only when a linear approach cannot be applied. It is not acceptable to use an alternate calibration procedure when a compound fails to perform in the usual manner. When this occurs it is indicative of instrument issues or operator error.
- If a nonlinear calibration curve fit is employed, a minimum of six calibration levels must be used for second-order (quadratic) curves, and a third order polynomial requires a minimum of seven calibration levels.
- When more than five levels of standards are analyzed in anticipation of using second- or third-order calibration curves, all calibration points **must** be used regardless of the calibration option employed. The highest or lowest calibration point may be excluded to narrow the calibration range and meet the requirements for a specific calibration option. Otherwise, unjustified exclusion of calibration data is expressly forbidden.
- Using the average (mean) relative standard deviation (RSD) of all analytes to meet ICAL criteria is **not** acceptable.

Calibration Options. This section describes the acceptable calibration options and the hierarchy that the laboratory should use when selecting a specific option. The choice of calibration option may also be based on previous experience or prior knowledge of detector response.

The following are calibration options:

- **Linear calibration using average calibration or response factors.** Calibration factors for external calibrations or response factors for internal calibrations must have RSDs not exceeding 20 percent or 15 percent, respectively, for quantitation. A minimum response factor of 0.05 for most target analytes or 0.01 for the least responsive target analytes must be achieved to ensure detectability.
- **Linear calibration using a linear regression equation (y=mx+b).** The correlation coefficient must equal 0.995 or better. The line should **not** be forced through the origin. The equation and a plot of the linear regression must be included in the raw data generated by the laboratory and made available in the data package upon request.
- **Nonlinear calibration.** This model may be a second-order or third-order polynomial. The model must be continuous without a break in the function and should **not** be forced through the origin. The coefficient of determination of the nonlinear regression must be

0.99 or better. The equation and a plot of the nonlinear regression must be included in the raw data generated by the laboratory and made available in the data package upon request. This method of calibration **must** be approved by the program or project chemist prior to analysis and is intended for nonlinear responding compounds only.

5.3.3.2 Continuing Calibration

Periodic verification of the ICAL is essential in generating analytical data of known quality. The continuing calibration verification analyses ensure that the instrument has not been adversely affected by the sample matrix or other instrument failures that would increase or decrease the sensitivity or accuracy of the method. The laboratory will perform continuing calibration for all methods in accordance with the specific requirements in the method and laboratory SOP.

Method SW8000B allowed the use of the average of all analytes percent difference or drift (%D) to meet the continuing calibration requirements for the method. Method SW8000B will not be allowed for the PG&E Program QAPP. Using the average (mean) %D to meet continuing calibration criteria is **not** acceptable. All analytes must meet the continuing calibration criteria for %D (see Method SW8000C).

5.4 Elements of Analytical Quality Control

Laboratory QC checks indicate the state of control that prevailed at the time of sample analysis. QC checks that involve field samples, such as matrix and surrogate spikes and field duplicates, also provide an indication of the presence of matrix effects. Field-originated blanks (see Section 3.5) provide a way to monitor potential contamination that field samples are subjected to. The QAPP specifies requirements for method blanks, LCSs, surrogate spikes, and MS/MSD that must be followed by subcontracting laboratories.

A laboratory QC batch is defined as a method blank, LCS, MS/MSD, or a sample duplicate (depending upon the method) and 20 or fewer environmental samples of similar matrix that are extracted or analyzed together. For gas chromatography/mass spectrometry volatile analyses, a method blank, LCS, and MS/MSD must be analyzed in each 12-hour calibration period. The number of environmental samples allowed in the laboratory QC batch is defined by the remaining time in the method-prescribed 12-hour calibration period divided by the analytical run time. Each preparation or analytical batch should be identified in a way that will associate environmental samples with the appropriate laboratory QC samples.

5.4.1 Method Blanks

Method blanks are used to monitor each preparation or analytical batch for interference or contamination from glassware, reagents, and other potential contaminant sources in the laboratory. A method blank is an analyte-free matrix (laboratory reagent water for aqueous samples or Ottawa sand for soil samples) to which all reagents are added in the same amount or proportions as are added to samples. It is processed through the entire sample preparation and analytical procedures along with the samples in the batch. There should be at least one method blank per preparation or analytical batch. If a target analyte is found at a concentration that exceeds the RL, corrective action must be performed to identify and eliminate the contamination source. **All** associated samples must be re-prepared or

reanalyzed, or both, after the contamination source has been eliminated if the compounds detected in the associated blank are also present in the field samples. No analytical data may be corrected for the concentration found in the blank (no blank correction).

5.4.2 Laboratory Control Sample

An LCS consists of an analyte-free matrix (laboratory reagent water for aqueous samples and Ottawa sand or glass beads for soil samples) spiked with known amounts of analytes that come from a source different than that used for calibration standards. A **complete target analyte list** for each method specified in the QAPP will be spiked into the LCS. The spike levels should be less than or equal to the midpoint of the calibration range. If LCS results are outside the specified control limits, corrective action must be taken, including sample re-preparation or reanalysis, or both, if appropriate. Documentation of the re-preparation or reanalysis, or both, must be provided in the analytical report. If more than one LCS is analyzed in a preparation or analytical batch, the results for each of the LCSs analyzed must be reported. Any LCS recoveries that are above or below the QC limits affect the accuracy for the entire batch and require corrective action.

5.4.3 Surrogates

Surrogates are organic analytes that behave similarly as the analytes of interest but are not expected to occur naturally in the samples. They are spiked into the standards, the samples, and QC samples prior to sample preparation. Surrogate recoveries are used as an indicator of accuracy, method performance, and extraction efficiency. If surrogate recoveries are outside the specified control limits, corrective action must be taken, including sample re-preparation or reanalysis, or both, if appropriate. Documentation of the re-preparation or reanalysis, or both, must be provided in the analytical report.

5.4.4 Matrix Spike/Matrix Spike Duplicate

An MS is a sample matrix fortified with known quantities of specific compounds; it is subjected to the same preparation and analytical procedures as the native sample. Target analytes are spiked into the sample. MS recoveries are used to evaluate the effect of the sample matrix on the recovery of the analytes of interest. An MSD is a second fortified sample matrix. The RPD between the results of duplicate MSs measures the precision of sample results. One MS/MSD (MSD where appropriate) per 20 project-specific samples will be analyzed. A complete target analyte list for each method specified in the QAPP will be spiked into the MS/MSD (with the exception of PCBs; see Appendix A -notes). Project-specific samples designated on the CoC form will be spiked. The spike levels will be less than or equal to the midpoint of the calibration range. Exceedances of control limits should be flagged in the analytical report.

5.4.4.1 Matrix Spike for Hexavalent Chromium Analyses

Interference from groundwater is known to reduce the sensitivity of MethodEPA218.6. This can result in an incorrect assessment of the analyte identification or the specific RL if the "Matrix Spike and Dilution Protocol" is not followed. Samples being analyzed by Method EPA218.6 may be required to follow the protocol in the following section.

Matrix Spike and Dilution Protocol. Matrix interference has been encountered that affects the sensitivity for hexavalent chromium by ion chromatography methods. CH2M HILL shall direct the laboratories to perform an additional QA/QC analyses to aid in assessing any effect on method sensitivity for each project due to the sample matrix.

For nondetect sample results, the laboratory will analyze an MS by spiking the samples with 1 µg/L of hexavalent chromium to ensure that identification is accurate and verify that false negatives are detected. For samples with detected results, the laboratory will analyze an MS by spiking the sample with hexavalent chromium at a level not less than 25 percent of the sample concentration. Laboratories will follow the standard protocol of 1 MS and 1 laboratory sample duplicate per 20 samples, unless directed by the project chemist to analyze the MS more frequently.

If the MS is not recovered or the peak is outside of the established retention time window for either detected or nondetect results, the laboratory will make a fivefold dilution of two aliquots of the sample. The first aliquot will be analyzed without the spike; the second aliquot will be spiked with hexavalent chromium at a concentration consistent with the concentrations previously listed and the recovery and peak retention times evaluated. If this MS recovery is not within laboratory QC limits or the peak is not within the laboratory retention time window, the laboratory will dilute two additional aliquots of the sample tenfold, spike one of the aliquots, and analyze the sample/MS. This procedure will be performed at successively greater dilutions of 25:1, 50:1, or 100:1 until the peak identified in the post spike analysis is within the established retention time window for hexavalent chromium and the recovery of the spike is within the laboratory QC limits listed in Appendix A.

The detected result that is reported by the laboratory on the final data package will be chosen from the dilution where both the peak detected in the unspiked and the spiked sample are within the appropriate retention time and the MS is recovered within the QC control limits. The RLs will be raised to the level of the appropriate dilution.

For nondetect results, the dilution selected by the laboratory for reporting will be taken from the smallest dilution that yields an MS recovery within QC control limits and within the appropriate retention time window.

5.4.5 Internal Standards

Internal standards are compounds that have similar properties as the analytes of interest but are not expected to occur naturally in the samples. Some methods require the use of internal standards to compensate for losses during injection or purging or losses due to viscosity. A measured amount of the internal standard is added to the standards, the samples, and QC samples following preparation. When the internal standard results exceed the control limits, corrective action must be taken, including sample reanalysis, if appropriate. Corrective action must be documented in the analytical report.

5.4.6 Laboratory Sample Duplicate

For some methods, a laboratory duplicate is performed instead of a matrix spike duplicate. A laboratory sample duplicate is a sample duplicate selected by the laboratory. It is subjected to the same preparation and analytical procedures as the native sample. The RPD

between the results of the native sample and laboratory sample duplicate measures the precision of sample results. The data collected may also yield information regarding whether the sample matrix is homogenous or heterogeneous.

5.4.7 Interference Check Samples

Interference check samples are used in inductively coupled plasma (ICP) analyses to verify background and interelement correction factors. They consist of two solutions, A and AB. Solution A contains the interfering analytes, and Solution AB contains the analytes of interest and the interfering analytes. Both solutions are analyzed at the beginning and at the end of each analytical sequence. When the interference check sample results exceed the control limits, corrective action must be taken, including sample reanalysis, if appropriate.

5.4.8 Retention Time Windows

Retention time windows for gas and liquid chromatographic analyses must be established by replicate injections of the calibration standard over multiple days as described in SW846 8000B, analytical method, or appropriate laboratory SOP. The absolute retention time of the calibration verification standard at the start of each analytical sequence will be the centerline of the window. For an analyte to be reported as positive, its elution time must be within the retention time window.

5.5 Additional Quality Control Requirements

5.5.1 Holding Time

The holding time requirements specified in this QAPP (see Table 4.1) must be met. For methods requiring both sample preparation and analysis, the preparation holding time will be calculated from the time of sampling to the completion of preparation. The analysis holding time will be calculated from the time of completion of preparation to the time of completion of the analysis, including required dilutions, confirmation analysis, and reanalysis. For methods requiring analysis only, the holding time is calculated from the time of sampling to completion of the analysis, including required dilutions, confirmation analysis, and reanalysis.

5.5.2 Confirmation

Confirmation analysis must be performed as specified for specific organic methods when the result is at or above the RL. Both the primary and confirmation results will be reported. Unless one of the analysis is specifically designated as the confirmation by the method, the more concentrated result will be reported as the sample result and the lesser concentration result as the confirmation. All calibration and QC requirements must be met when confirmation analysis is performed.

5.5.3 Cleanup Procedures to Minimize Matrix Effects

To maintain the lowest possible RLs, appropriate cleanup procedures should be employed when it is indicated by the method to remove or minimize matrix interference. Methods for sample cleanup include, but are not limited to, gel permeation chromatography, silica gel,

alumna, florisil, mercury (sulfur removal), sulfuric acid, and acid/base partitioning. Method blanks, MS/MSDs, and LCSs must be subjected to the same cleanup procedures performed on the samples to monitor the efficiencies of these procedures.

5.5.4 Sample Dilution

Dilution of a sample results in elevated RLs and ultimately affects the usability of the data related to potential actions at the sampling site. It is important to minimize dilutions and maintain the lowest possible RLs. When dilutions are necessary because of high concentrations of target analytes, lesser dilutions should also be reported to fully characterize the sample for each analyte. The level of the lesser dilution should be such that it will provide the lowest possible RLs without having a lasting deleterious effect on the analytical instrumentation.

When a sample exhibits characteristics of matrix interference that are identified through analytical measurement or visual observation, appropriate cleanup procedures specified in Section 5.5.3 must be proven ineffective or inappropriate prior to proceeding with dilution and analysis. Any analyses conducted at a dilution where all analytes will be reported as non-detect above the QAPP RL, must be discussed with the project chemist prior to finalizing the report.

5.5.5 Standard Materials and Other Supplies and Consumables

Standard materials must be of known high purity and traceable to an approved source. Pure standards must not exceed the manufacturer's expiration date or 1 year after receipt if no expiration date is provided. Solutions prepared by the laboratory from the pure standards must be used within the expiration date specified in the laboratory's SOP.

All other supplies and consumables must be inspected prior to use to ensure that the supplies meet the requirements specified in the appropriate SOP. The laboratory's inventory and storage system should ensure their use within the manufacturer's expiration date and storage under proper conditions.

5.5.6 Manual Integration

The laboratory is required to provide all analysts performing methods that rely on interpretation of chromatographic data with training on appropriate software or manual integration practices. The laboratory also will make every effort to minimize the use of manual integration of data. If the need arises to use manual integration to correct a software autointegration error, the manual integration will be clearly identified in the instrument data. Before and after enlargements of the region of the chromatogram where the manual integration was performed will be provided on an appropriate scale that allows an independent reviewer to evaluate the need and quality of the manual integration. The analyst will also document the reason for the manual integration on the chromatogram along with their date and initials. The laboratory manager or designee will approve the manual integration by dating and initialing the chromatogram.

5.5.7 Laboratory Quality Assurance Program

The laboratory will maintain a quality assurance manual or equivalent document. The manual must include all of the requirements provided in the California Environmental Laboratory Accreditation Program (ELAP), and, if applicable, the National Environmental Laboratory Accreditation Program (NELAP). The manual will define the laboratory's internal procedures for QA/QC as follows:

- QA policies, objectives, and requirements
- Organization and personnel
- Document control
- SOPs (analytical methodology and administrative)
- Data generation
- Software verification
- Quality assurance
- Quality control
- Nonconformance/corrective action procedures
- Data review

5.5.7.1 Laboratory Standard Operating Procedures

The laboratory will maintain SOPs for all analytical methods and laboratory operations. The format for SOPs will conform with the following:

- *Test Methods for Evaluating Solid Waste, Physical and Chemical Methods, SW-846, Third Edition, Update III, Section 1* (EPA, 1996)
- "Good Laboratory Practices" in *Principles and Guidance to Regulations for Ensuring Data Integrity in Automated Laboratory Operations* (EPA, 1995)

All SOPs must have a unique identification number that is traceable to previous revisions of the same document. SOP review must be completed annually.

5.5.7.2 Demonstration of Capability

Laboratory QA department personnel will maintain records documenting the ability of each analyst to perform applicable method protocols. Documentation will include annual checks for each method and analyst. In addition, internal, blind performance evaluation samples for each method and matrix demonstrating overall laboratory performance must be submitted annually. The laboratory may receive additional blind performance evaluation samples in conjunction with the PG&E Program.

5.6 Analytical Procedures

The allowed sample preparation methods are presented in Table 5-2. Any changes or alternatives to this list will be included in site-specific SAPs or QAPP addenda. Analytical and preparation methods for SW7000 series are provided in Table 5-2 as alternate methods to SW6020 (with the exception of mercury and soil hexavalent chromium, the SW 7000 series must be approved by the project chemist). These methods will be allowed, provided the RL

objectives are met. After a method is chosen, it must be used throughout the duration of a specific project to maintain data comparability.

This QAPP includes common analytical procedures that may be required for the PG&E Program. Appendix A, Tables A -1 through A -3 contain representative lists of the analytes of concern, the methods to be used, and the RL objectives. Some of the listed analytes may not necessarily be of concern for a particular project; project-specific SAPs or QAPP addenda will list the analytes of concern. The RLs included herein reflect quantifiable levels that are attainable with a specified degree of confidence using the specified methods. The RLs should meet most preliminary cleanup goals or action levels. If changes to the methods or RLs are necessary to meet cleanup goals, the QAPP will be updated or amended by addendum.

General QC requirements are discussed in Section 5.3.3. The calibration and QC requirements specified for each method will be followed and are included in Appendix A and Tables 5-3 through 5-15. Appropriate corrective action will be taken when acceptance criteria are not met. If corrective action is not effective, and data quality is potentially degraded, the occurrence must be documented in a corrective action report and in the data package case narrative. The laboratory manager or a designated person must notify the project chemist.

Analytical services will be provided by laboratories contracted by CH2M HILL or its subcontractors. Analytical laboratories will be accredited, in accordance with the California ELAP, for all parameters where accreditation is available. Subcontract laboratories will be required to follow the SAP and QAPP addenda that are applicable to specific projects or activities and must be approved by the CH2M HILL project chemist.

Field measurements will be performed or supervised directly or indirectly by CH2M HILL field personnel.

5.7 Title 22 Metals

The California Code of Regulations - Title 22, Division 4.5 – Environmental Health Standards for the Management of Hazardous waste has a waste characterization protocol that specifies the following stepped procedure for determining hazardous waste disposal:

1. If the sample is suspected of containing high levels of metals, analyze for the Title 22 metals – total threshold limit concentration (TTLC) (see Appendix A, Table A-3).
2. Compare the TTLC sample results with column G of Appendix A, Table A-3.
3. If the TTLC sample results are greater than the concentrations listed in column G of Appendix A, Table A-3, extract and analyze the samples using the waste extraction test (WET) [only required for analytes that exceed the concentrations listed in column G of Appendix A, Table A-3].
4. If the soluble threshold limit concentration (STLC) sample result, from the waste extraction test extraction, is greater than the concentration listed in column H of Appendix A, Table A-3 for any of the Resource Conservation and Recovery Act metals listed in column E of Appendix A, Table A-3., extract the sample by toxicity

characteristic leaching procedure (TCLP) Method 1311 and analyze for the specific metals that exceeded the STLC threshold.

TABLE 5-1
Maximum Concentrations for Title 22 – Organic Compounds – SW8000 Series
PG&E Program Quality Assurance Project Plan

Constituent	CAS	Method
Mirex	2385-85-5	SW8081
Methyl chloromethyl ether (Chloromethyl methyl ether)	107-30-2	SW8021B
2-Acetylaminofluorene (2-AAF)	53-96-3	SW8270C
Acrylonitrile	107-13-1	SW8260B
4-Aminodiphenyl (4-Aminobiphenyl)	92-67-1	SW8270C
Benzidine and its salts	92-87-5	SW8270C
bischloromethyl ether (BCME)	542-88-1	SW8270C
1,2-Dibromo-3-chloropropane (DBCP)	96-12-8	SW8270C
4-Dimethylaminoazobenzene (DAB)	60-11-7	SW8270C
Ethyleneimine (EL)	151-56-4	
ALPHA-NAPHTHYLAMINE (1-NA)	134-32-7	SW8270C
BETA-NAPHTHYLAMINE (2-NA)	91-59-8	SW8270C
4-Nitrobiphenyl (4-NBP)	92-93-3	SW8270C
N-Nitrosodimethylamine (DMN)	62-75-9	SW8270C
beta-Propiolactone (BPL)	57-57-8	SW8260B

Note:

If the sample contains any of the compounds listed in this table at a single or combined concentration equal to or exceeding 0.001 percent by weight, the sample is considered to be toxic under CA Title 22 Section 66261.24 (Characteristic of Toxicity)

TABLE 5-2
Extraction and Digestion Methods
PG&E Program Quality Assurance Project Plan

Analytical Method	Parameter	Preparatory Methods
SW6010B	Trace metals by ICP	SW3005A, SW3010A, SW3015, SW3050B, SW3051
SW6020	Trace metals by ICP-MS	SW3005A, SW3010A, SW3015, SW3050B, SW3051
SW7000 Series[a]	Various elements (unless specified separately) Does Not include Mercury or soil Hexavalent chromium	SW3015, SW3020A, SW3050B, SW3051
EPA200.7 and EPA200.8	Trace metals by ICP/ICP-MS	See analytical method
SW7470A, SW7471A, and EPA245.1	Mercury by cold vapor atomic adsorption	See analytical method
SW7196A, SW7199, and EPA218.6	Hexavalent chromium	See analytical method for water, Use SW3060A for soil preparation prior to SW7199
SW8015B or D	TPH volatile and extractable (water and soil)	Volatiles: SW5030BB, SW5031, SW5035 Extractables: SW3510C, SW3520C, SW3545C, SW3541, SW3545, SW3550B
SW8081A	Organochlorine pesticides (water and soil)	SW3510C, SW3520C, SW3540C, SW3541, SW3545, SW3550B
SW8082	PCBs (water and soil)	SW3510C, SW3520C, SW3540C, SW3541
SW8151A	Chlorinated herbicides (water and soil)	SW3510C, SW3520C, SW3540C, SW3541, SW3550B
SW8260B	Volatile organics (water and soil)	SW3585, SW5021, SW5030B, SW5031, SW5032, SW5035
SW8270C and SW8270C SIM	Semivolatile organics (water and soil)	SW3510C, SW3520C, SW3535, SW3540C, SW3541, SW3545, SW3550B
Laboratory SOP (CF-IRMS)	Stable isotopes	See laboratory SOP
Various[b]	General chemistry	See analytical method

[a]Must be approved by the project chemist.

[b]EPA120.1/SW9050, EPA150.1/SW9040, EPA160.1, EPA160.2, EPA180.1, EPA300.0/SW9056, EPA310.1, EPA350.3, EPA354.1, EPA365.1, EPA370.1, EPA376.1/2, SM3500, EPA335.2, SW9010B, SW9014, and EPA415.2.

Note:

ICP-MS = inductively coupled plasma/mass spectrometry

TABLE 5-3
Surrogate Recovery for Organic Compounds – SW8000 Series
PG&E Program Quality Assurance Project Plan

	Liquid Matrix % Recovery		Solids Matrix % Recovery	
Compound	**Lower Limit**	**Upper Limit**	**Lower Limit**	**Upper Limit**
SW8015-E[a]				
Benzo (a) pyrene	70	125	60	125
Bromobenzene	50	140	50	150
Hexacosane	60	140	60	140
Octacosane	26	152	25	162
Triacontane	40	140	30	150
Ortho-Terphenyl	57	132	47	142
Fluorobenzene	75	125	65	135
SW8015-P				
Bromofluorobenzene	70	130	64	148
Chlorobenzene[b]	74	138	64	148
Trifluorotoluene	70	130	70	130
SW8021				
Trifluorotoluene	65	125	65	125
SW8082[c]				
Decachlorobiphenyl	29	133	26	125
Tetrachloro-m-xylene	50	120	48	121
SW8260B[d]				
1,2-Dichloroethane-d4	72	119	52	149
4-Bromofluorobenzene	76	119	65	135
Dibromofluoromethane	85	115	65	135
Toluene-d8	81	120	75	125
SW8270C				
1,2-Dichlorobenzene-d4[e, f]	27	100	25	110
2,4,6-Tribromophenol[g]	42	124	36	126
2-Chlorophenol-d4[e, g]	34	98	30	100
2-Fluorobiphenyl[f]	48	120	43	125
2-Fluorophenol[g]	20	120	37	125
Nitrobenzene-d5[f]	41	120	37	125
Phenol-d5[g]	20	120	40	125
Terphenyl-d14[f]	51	135	32	125
SW8270SIM				
1,2-Dichlorobenzene-d4	27	100	25	110
2-Fluorobiphenyl	34	135	34	135
Nitrobenzene-d5	25	135	25	135
Terphenyl-d14	34	167	14	129

TABLE 5-3
Surrogate Recovery for Organic Compounds – SW8000 Series
PG&E Program Quality Assurance Project Plan

	Liquid Matrix % Recovery		Solids Matrix % Recovery	
Compound	**Lower Limit**	**Upper Limit**	**Lower Limit**	**Upper Limit**
SW8081A				
Decachlorobiphenyl	29	135	26	125
Tetrachloro-m-xylene	33	138	36	124
SW8151A				
2,4-dichlorophenylacetic acid	50	130	51	146

[a]Choose two from the list
[b]Required by method
[c]Use tetrachloro-m-xylene as a surrogate if DCBP is used as an IS.
[d]Choose three from the list
[e]Approved alternatives
[f]Base fraction
[g]Acid fraction

TABLE 5-4
Calibration and QC Requirements for Metals – SW6010B and EPA200.7
PG&E Program Quality Assurance Project Plan

QC Check	Frequency	Criteria	Corrective Action
ICAL (a blank and at least one standard)	When modifications are made to the system, or when continuing calibration verification fails.	If more than one standard is used, correlation coefficient must be >0.995.	Not applicable.
Second-Source Calibration Verification	Immediately following each ICAL.	All analytes within ±10% of expected value for SW6010B and within ±5% of expected value for EPA200.7.	Correct problem and repeat ICAL.
Calibration Blank	After every second-source or continuing calibration verification analysis.	No analytes detected at or above the RL.	Correct the problem and reanalyze previous 10 samples.
Continuing Calibration Verification	After every 10 samples and at the end of the analysis sequence.	All analytes within ±10% of expected value for SW6010B and within ±10% of expected value for EPA200.7.	Recalibrate and reanalyze all samples since the last acceptable continuing calibration verification.
Method Blank	At least one per analytical batch.	No analytes detected at or above the RL.	Correct the problem, re-prepare, and reanalyze all associated samples.
Interference Check Standard	At the start and end of each analytical sequence or twice during an 8-hour period, whichever is more frequent.	All analytes within ±20% of expected value.	Correct the problem, recalibrate, and reanalyze ICS and all affected samples.

TABLE 5-4
Calibration and QC Requirements for Metals – SW6010B and EPA200.7
PG&E Program Quality Assurance Project Plan

QC Check	Frequency	Criteria	Corrective Action
MS/MSD	One set per 20 project-specific samples. MSD is optional if a laboratory sample duplicate is performed.	All analytes within limits specified in Appendix A.	None.
Laboratory Sample Duplicate	Once per analytical batch if MSD not performed.	Concentration of reported analytes are >5 times the RL in either sample and RPD >20%. One sample result <RL and a difference of ±2 times the RL.	None.
LCS	At least one per analytical batch.	All analytes within limits specified in Appendix A.	Correct the problem, re-prepare and reanalyze the LCS and all samples in the analytical batch.
Postdigestion Spike Addition	When MS/MSD fails.	Recovery within 75 to 125% of expected value.	None.
Dilution Test	Each new sample matrix. Or when the PDS fails	Result from 1:5 dilution must be within ±10% of the undiluted sample result (applies only if undiluted sample result is at least 25 times the RL).	Perform postdigestion spike addition.
Linear Range Calibration Check Standard	Once per quarter.	All analytes within +10% of expected value.	Correct problem and reanalyze or reset linear range.

TABLE 5-5
Calibration and QC Requirements for Metals – SW6020 and EPA200.8
PG&E Program Quality Assurance Project Plan

QC Check	Frequency	Criteria	Corrective Action
ICAL (a blank and at least one standard)	Before initial sample analysis, when modifications are made to the analytical system, or when continuing calibration verification fails.	Not applicable	Not applicable
Second-source Calibration Verification	Immediately following each ICAL.	All analytes within ±10% of expected value.	Correct problem and repeat ICAL.
Calibration Blank	After every Second-source or Continuing calibration verification analysis.	No analytes detected at or above the RL.	Correct the problem and reanalyze previous 10 samples.

TABLE 5-5
Calibration and QC Requirements for Metals – SW6020 and EPA200.8
PG&E Program Quality Assurance Project Plan

QC Check	Frequency	Criteria	Corrective Action
Continuing Calibration Verification	After every 10 samples and at the end of the analysis sequence.	All analytes within ±10% of expected value.	Recalibrate and reanalyze all samples since the last acceptable continuing calibration verification.
Method Blank	At least one per analytical batch.	No analytes detected at or above the RL.	Correct the problem, re-prepare, and reanalyze all associated samples.
Interference Check Standard	At the start and end of each analytical sequence or twice during an 8-hour period, whichever is more frequent.	All analytes within ±20% of expected value.	Correct the problem, recalibrate and reanalyze ICS and all affected samples.
MS/MSD	One set per 20 project-specific samples. MSD is optional if a laboratory sample duplicate is performed.	All analytes within limits specified in Appendix A.	None.
Laboratory Sample Duplicate	Once per analytical batch if MSD not performed.	Concentration of reported analytes are >5 times the RL in either sample and RPD >20%. One sample result <RL and a difference of ±2 times the RL.	None.
LCS	At least one per analytical batch.	All analytes within limits specified in Appendix A.	Correct the problem, re-prepare, and reanalyze the LCS and all samples in the analytical batch.
Postdigestion Spike Addition	When MS/MSD fails.	Recovery within 75 to 125% of expected value.	None.
Dilution Test	Each new sample matrix. Or when the PDS fails	Result from 1:5 dilution must be within ±10% of the undiluted sample result (applies only if undiluted sample result is at least 25 times the RL).	Perform postdigestion spike addition.

TABLE 5-6
Calibration and QC Requirements for Metals – SW7000 Series and EPA245.1
PG&E Program Quality Assurance Project Plan

QC Check	Frequency	Criteria	Corrective Action
Multipoint ICAL (a blank and at least five standards)	Before initial sample analysis, when modifications are made to the analytical system, or when continuing calibration verification fails.	Correlation coefficient of linear regression is ≥0.995.	Correct the problem and repeat the ICAL.
Second-source Calibration Verification	Immediately following each ICAL.	All analytes within ±20% of expected value.	Correct the problem and repeat ICAL.
Calibration Blank	After every second-source or continuing calibration verification analysis.	No analytes detected at or above the RL.	Correct the problem, then reanalyze previous 10 samples.
Continuing Calibration Verification	After every 10 samples and at the end of the analysis sequence.	All analytes within ±20% of expected value.	Recalibrate and reanalyze all samples since the last accept-able continuing calibration verification.
Method Blank	At least one per analytical batch.	No analytes detected at or above the RL.	Correct the problem, re-prepare, and reanalyze all associated samples.
MS/MSD	One set per 20 project-specific samples. MSD is optional if a laboratory sample duplicate is performed.	All analytes within limits specified in accuracy and precision table.	None.
Laboratory Sample Duplicate	Once per analytical batch if MSD not performed.	Concentration of reported analytes are >5 times the RL in either sample and RPD >20%. One sample result <RL and a difference of ±2 times the RL.	None.
LCS	At least one per analytical batch.	All analytes within limits specified Appendix A.	Correct the problem, re-prepare, and reanalyze the LCS and all samples in the analytical batch.
Recovery Test (PDS)	When MS/MSD fails.	Recovery within 85 to 115% of expected value.	Analyze all samples by MSA.
Dilution Test	Each new sample matrix. Or when the PDS fails	Result from 1:5 dilution must be within ±10% of the undiluted sample result (applies only if undiluted sample result is at least 25 times the RL).	Perform recovery test.

Note:
MSA = method of standard addition

TABLE 5-7
Calibration and QC Requirements for General Chemistry and Other Parameters[a]
PG&E Program Quality Assurance Project Plan

QC Check	Frequency	Criteria	Corrective Action
Multipoint ICAL (a blank and at least five standards); Does Not Apply to Titrimetric Method	Before initial sample analysis, when modifications are made to the analytical system, or when continuing calibration verification fails.	Correlation coefficient of linear regression is ≥0.995.	Correct the problem and repeat the ICAL.
Second-source calibration verification	Immediately following each ICAL.	Analytes within ±15% of expected value (±10% for SW9056/EPA300.0).	Correct the problem and repeat ICAL.
Calibration blank; does not apply to titrimetric method	After every second-source or continuing calibration verification analysis.	No analytes detected at or above the RL.	Correct the problem, then reanalyze previous 10 samples.
Continuing calibration verification	After every 10 samples and at the end of the analysis sequence.	Within ±15% of expected value (±10% for SW9056/EP300.0).	Recalibrate and reanalyze all samples since the last acceptable continuing calibration verification.
Method blank	At least one per analytical batch.	No analytes detected at or above the RL.	Correct the problem, re-prepare, and reanalyze all associated samples.
MS/MSD	One set per 20 project-specific samples. MSD is optional if a laboratory sample duplicate is performed.	All analytes within limits specified in Appendix A.	None.
Laboratory Sample Duplicate	Once per analytical batch if MSD not performed.	Concentration of reported analytes are >5 times the RL in either sample and RPD >20%. One sample result <RL and a difference of ±2 times the RL.	None.
LCS	At least one per analytical batch.	All analytes within limits specified in Appendix A.	Correct the problem, re-prepare, and reanalyze the LCS and all samples in the analytical batch.
IPC (EPA314.0 only)	Daily, before sample analysis.	Conductance within 10% of original value (original value within ±10% of MCT). $PD_{A/H}$ <25%, instrument response within ±20% of expected response. Retention time shifts <5%, or overall retention time <80% of original recorded value.	Prepare fresh IPC solution. Redetermined MCT or correct problem and reanalyze IPC. Correct problem, clean or replace column.

TABLE 5-7
Calibration and QC Requirements for General Chemistry and Other Parameters[a]
PG&E Program Quality Assurance Project Plan

QC Check	Frequency	Criteria	Corrective Action
ICAL Verification (ICCS) (EPA314.0 only)	Daily, before sample analysis or when eluent is changed.	Instrument response within ±25% of expected value using a standard at or below the RL.	Correct problem then repeat ICAL.
Pretreated Laboratory Reagent Blank (EPA314.0 only)	Required in any analytical batch which includes samples that have been pretreated to reduce the common anion levels.	Perchlorate must be ≤½ RL.	Correct problem, re-prepare, and analyze method blank and all samples processed with the contaminated blank.
Low-level MDL Check Standard (EPA314.0 only)	Weekly and with ICAL.	Must meet QC acceptance criteria, 50 to 150% of its true concentration.	Reanalyze low-level MDL check standard, if still out of criteria, repeat ICAL.

[a]Unless calibration and QC requirements are specified for an individual method.

Notes:

ICCS = initial calibration check standard

IPC = instrument performance check

MCT = matrix conductivity threshold

TABLE 5-8
Calibration and QC Requirements for Hexavalent Chromium – SW7199 and EPA218.6
PG&E Program Quality Assurance Project Plan

QC Check	Frequency	Criteria	Corrective Action
Multipoint ICAL (a blank and at least five standards)	Before initial sample analysis, when modifications are made to the analytical system, or when continuing calibration verification fails.	Correlation coefficient of linear regression is ≥0.999.	Correct the problem and repeat the ICAL.
Second-source Calibration Verification	Immediately following each ICAL.	All analytes within ±10% of expected value.	Correct the problem and repeat ICAL.
Calibration Blank	After every second-source or continuing calibration verification analysis.	No analytes detected at or above the RL.	Correct the problem, then reanalyze previous 10 samples.
Continuing Calibration Verification	After every 10 samples and at the end of the analysis sequence.	All analytes within ±10% of expected value for SW7199 and within ±5% of expected value for EPA218.6.	Recalibrate and reanalyze all samples since the last accept-able continuing calibration verification.
Low-level Calibration verification at the RL of 0.2µg/L	Immediately following each ICAL.	Result within ±20% of expected value.	Correct the problem and repeat ICAL.
Duplicate Sample Injections (SW7199 only)	Every sample.	RPD between injections must be <20%.	Correct the problem, re-prepare, and reanalyze all associated samples.

TABLE 5-8
Calibration and QC Requirements for Hexavalent Chromium – SW7199 and EPA218.6
PG&E Program Quality Assurance Project Plan

QC Check	Frequency	Criteria	Corrective Action
Method Blank	At least one per analytical batch.	No analytes detected at or above the RL.	Correct the problem, re-prepare, and reanalyze all associated samples.
MS	One per 20 project-specific samples.	All analytes within limits specified in Appendix A.	None.
Laboratory Sample Duplicate	Once per analytical batch if MSD not performed.	Concentration of reported analytes are >5 times the RL in either sample and RPD >20%. One sample result <RL and a difference of ±2 times the RL.	None.
LCS	At least one per analytical batch.	All analytes within limits specified in Appendix A.	Correct the problem, re-prepare, and reanalyze the LCS and all samples in the analytical batch.
pH Buffer Solution Modification	As needed because of sample matrices that cause the analytical column to overload. All QC samples and analyses will use the modified buffered solution when needed.	A modified pH-adjustment buffer that contains 10 times less ammonium sulfate (33 g/L) but the same concentration of ammonium hydroxide as the buffer prescribed in SW7199/ EPA218.6.	None.
MS Dilute and Spike (see Section 5.3.3.1)	As directed in Section 5.3.3.1.	Spike recovery 85 to 115% and peak within RT window.	Dilute two aliquots 1:5, spike one with 1 μg/L of hexavalent chromium and analyze the other unspiked. Continue the procedure using successively greater dilutions of two aliquots until RT and recovery criteria are met.

Note:
RT = retention time

TABLE 5-9
Soil Preparation Method SW3060A for Method SW7199
PG&E Program Quality Assurance Project Plan

QC Check	Frequency	Criteria	Corrective Action
2.5 grams sample to a final volume of 100 ml must be used for each sample	Each sample in the preparation batch.	Follow method preparation for all samples, method blank, and QC samples.	
Method Blank	One per preparation batch.	No analytes detected at or above the RL.	Correct the problem, re-prepare, and reanalyze all associated samples.
LCS	One per preparation batch.	Spike at concentration specified in method. Recovery range 80 to 120%.	Correct the problem, re-prepare, and reanalyze the LCS and all samples in the analytical batch.
Soluble Matrix Spike	One per preparation batch.	Spike at concentration specified in method. Recovery range 75 to 125%.	None.
Insoluble Matrix Spike	One per preparation batch.	Spike at concentration specified in method. Recovery range 75 to 125%.	None.
Post Digestion Spike	One per preparation batch.	Spike at concentration specified in method. Recovery range 85 to 115%.	None.

TABLE 5-10
Calibration and QC Requirements for Stable Isotopes[a]
PG&E Program Quality Assurance Project Plan

QC Check	Frequency	Criteria	Corrective Action
Instrument Standardization	Daily, prior to sample analysis.	Laboratory SOP.	Perform instrument maintenance.
Laboratory Sample Duplicate	Every sample analyzed five times.	Laboratory SOP.	Perform instrument maintenance and reanalyze samples.

[a] ^{18}O and deuterium

TABLE 5-11
Calibration and QC Requirements for TPH, BTEX, Herbicides, and Dissolved Gases – SW8015B, SW8021B, SW8151A, and RSK-175S
PG&E Program Quality Assurance Project Plan

QC Check	Frequency	Criteria	Corrective Action
Multipoint ICAL (minimum 5 points)	Prior to sample analysis, or when calibration verification fails.	If the %RSD is ≤20%, the average RRF may be used for quantitation; otherwise use calibration curve with coefficient of correlation or determination ≥0.99.	Correct the problem and repeat the ICAL.
Continuing Calibration Verification	At the start of each analytical sequence and after every 10 samples, and at the end of the sequence.	Analytes within ±15% of expected value.	Correct the problem, recalibrate, and reanalyze all samples since the last acceptable continuing calibration verification.
Method Blank	At least one per analytical batch.	No analytes detected at or above the RL.	Correct the problem, re-prepare, and reanalyze all associated samples.
Surrogate Spike	Every standard, sample, method blank, MS/MSD, and LCS.	All surrogates in samples, method blank, MS/MSD, and LCS within limits specified in Appendix A.	Correct the problem and reanalyze (re-prepare if necessary).
MS/MSD	One set per 20 samples.	Full target list spike required within limits specified in Appendix A. Not applicable for RSK-175.	None.
LCS	At least one per analytical batch.	Full target list spike required within limits specified in Appendix A.	Correct the problem, re-prepare, and reanalyze the LCS and all samples in the analytical batch.
Second Detector or Second Column Confirmation (does not apply to SW8015B or RSK-175)	All samples with results above the RL objectives must be confirmed within the holding time.	Confirmation to be done using a second detector, or second column of dissimilar phase and retention characteristics (or gas chromatography/mass spectrometry if sample concentration is sufficiently high). All calibration and QC acceptance criteria specified for primary analysis must be met in the confirmation analysis.	Failure to perform confirmation will result in potential resampling and analysis at no cost to the project.

Note:
RRF = relative response factor

TABLE 5-12
Calibration and QC Requirements for Pesticides and PCBs – SW8081A and SW8082
PG&E Program Quality Assurance Project Plan

QC Check	Frequency	Criteria	Corrective Action
Multipoint ICAL (minimum 5 points) for single-response pesticides; single-point calibration for toxaphene and chlordane; multipoint calibration for Aroclors 1016 and 1260 only, but include midpoint standard for all other Aroclors for pattern recognition; if a specific Aroclor is found in any sample, quantitation for that Aroclor must be done using 5-point calibration	Prior to sample analysis or when calibration verification fails.	To use average RRF for quantitation of any analyte, % RSD must be ≤20%; otherwise use calibration curve with coefficient of correlation or determination ≥0.99.	Correct the problem and repeat the ICAL.
Second-source calibration verification – pesticides and Aroclors 1016 and 1260 (or Aroclors identified in samples)	Once for each multipoint ICAL.	All analytes within ±15% of expected value.	Correct the problem, then recalibrate and reanalyze all samples since the last acceptable continuing calibration verification.
Continuing calibration verification – pesticides and Aroclors 1016 and 1260 (or Aroclors identified in samples)	At the start of each analytical sequence; after every 12 hours or 10 samples, whichever is more frequent; and at the end of the sequence.	All analytes within ±15% of expected value.	Correct the problem, then recalibrate and reanalyze all samples since the last acceptable continuing calibration verification.
Endrin/DDT breakdown check (not applicable when analyzing for Aroclors/PCBs only)	At start of each 12-hour period.	Breakdown of either endrin or DDT ≤15%.	Evaluate injector port and take corrective action; recalibrate and reanalyze affected samples if necessary.
Method Blank	At least one per analytical batch.	No analytes detected at or above the RL.	Correct the problem, re-prepare, and reanalyze all associated samples.
Surrogate Spike	Every standard, sample, method blank, MS/MSD, and LCS.	At least one of the surro-gates in samples, method blank, MS/MSD, and LCS within limits specified in Appendix A.	Correct the problem and reanalyze (re-prepare if necessary).
MS/MSD	One set per 20 project-specific samples.	Full target list spike required within limits specified in corresponding Appendix A.	None.
LCS	At least one per analytical batch.	Full target list spike required within limits specified in corresponding Appendix A.	Correct the problem, re-prepare, and reanalyze the LCS and all samples in the analytical batch.

TABLE 5-12
Calibration and QC Requirements for Pesticides and PCBs – SW8081A and SW8082
PG&E Program Quality Assurance Project Plan

QC Check	Frequency	Criteria	Corrective Action
Second Column Confirmation	All samples with results above the RL objectives must be confirmed within the holding time.	Confirmation to be done using second column of dissimilar phase and retention characteristics (or gas chromatography/mass spectrometry if sample concentration is sufficiently high). All calibration and QC acceptance criteria specified for primary analysis must be met in the confirmation analysis.	Failure to perform confirmation will result in potential resampling and analysis at no cost to the project.

Note:

DDT = dichloro-diphenyl-trichloroethane

TABLE 5-13
Calibration and QC Requirements for VOCs – SW8260B
PG&E Program Quality Assurance Project Plan

QC Check	Frequency	Criteria	Corrective Action
BFB Tuning	Prior to ICAL and calibration verification (every 12 hours).	Refer to criteria listed in the method.	Retune instrument and verify.
Multipoint ICAL (minimum 5 points)	Prior to sample analysis, or when calibration verification fails.	SPCCs average RRF ≥0.30a and %RSD for RRFs for CCCs ≤30% and one of the following options: Option 1 Linear – RSD for each analyte <15%. Use of the mean %RSD for all analytes ≤15% may **not** be used. Option 2 Linear – least squares regression r ≥0.995. Option 3 Nonlinear – coefficient of determination ≥0.99 (6 standards to used for a second order; 7 standards to be used for a third order).	Correct the problem and repeat the ICAL.
Second-source Calibration Verification	Once for each multipoint ICAL.	All analytes within ±25% of expected value.	Correct the problem and repeat ICAL.

TABLE 5-13
Calibration and QC Requirements for VOCs – SW8260B
PG&E Program Quality Assurance Project Plan

QC Check	Frequency	Criteria	Corrective Action
Continuing Calibration Verification	At the start of each analytical sequence and every 12 hours thereafter.	SPCCs average RF ≥0.30c and %D for RFs for CCCs ≤20%. All other analytes within ±20% of expected value.	Correct the problem, recalibrate, and reanalyze all samples since the last acceptable continuing calibration verification.
Retention Time Window Calculated for Each Analyte	Each analyte.	Relative retention time of each analyte within ±0.06 relative retention time units of the ICAL.	Not applicable (used for identification of analyte).
Internal Standards	Each sample and QC sample, method blank, MS/MSD and LCS.	Continuing calibration verification retention time within ±30 seconds from retention time of the ICAL midpoint standard. Sample retention time within ±30 seconds from retention time of the daily continuing calibration verification. Continuing calibration verification EICP area within –50% to +100% of the internal standard responses in the ICAL midpoint standard. Sample EICP area within –50% to +100% of the daily continuing calibration verification.	Inspect mass spectrometer and gas chromatography for malfunctions; reanalyze all affected samples.
Method Blank	At least one per analytical batch.	No analytes detected at or above the RL.	Correct the problem, re-prepare, and reanalyze all associated samples.
Surrogate Spike	Every standard, sample, method blank, MS/MSD and LCS.	All surrogates in samples, method blank and LCS within limits Appendix A.	Correct the problem and reanalyze (re-prepare if necessary).
MS/MSD	One set per 20 project-specific samples.	Full target list spike required within limits specified in Appendix A.	None.
LCS	At least one per analytical batch.	Full target list spike required within limits specified in Appendix A.	Correct the problem, re-prepare, and reanalyze the LCS and all samples in the analytical batch.

[a]SPCC average RRF ≥0.10 for bromoform, chloromethane, and 1,1-dichloroethane.

Notes:
BFB = bromofluorobenzene
CCC = calibration check compounds
EICP = extracted ion current profile SPCC

TABLE 5-14
Calibration and QC Requirements for Semivolatile Organic Compounds – SW8270C
PG&E Program Quality Assurance Project Plan

QC Check	Frequency	Criteria	Corrective Action
DFTPP Tuning	Prior to ICAL and calibration verification (every 12 hours).	Refer to criteria listed in the method.	Retune instrument and verify.
Multipoint ICAL (minimum 5 points)	Prior to sample analysis, or when calibration verification fails.	SPCCs average RF ≥0.050 and %RSD for RFs for CCCs ≤30% and one of the following options: Option 1: Linear – RSD for each analyte <15%. Use of the mean %RSD for all analytes ≤15% may **not** be used. Option 2: Linear – least squares regression r ≥0.995. Option 3: Nonlinear – coefficient of Determination ≥0.99 (6 standards to used for a second order; 7 standards to be used for a third order).	Correct the problem and repeat the ICAL.
Second-source Calibration Verification	Once for each multipoint ICAL.	All analytes within ±25% of expected value.	Correct the problem and repeat ICAL.
Continuing Calibration Verification	At the start of each analytical sequence and every 12 hours thereafter.	SPCCs average RF ≥0.050 and %D for RFs for CCCs ≤20%. All other analytes within ±20% of expected value.	Correct the problem, recalibrate, and reanalyze all samples since the last acceptable continuing calibration verification.
Retention Time Window Calculated for Each Analyte	Each analyte.	Relative retention time of each analyte within ±0.06 relative retention time units of the ICAL.	Not applicable (used for identification of analyte).
Internal Standards	Each sample and QC sample, method blank, MS/MSD and LCS.	Continuing calibration verification retention time within ±30 seconds from retention time of the ICAL midpoint standard. Sample retention time within ±30 seconds from retention time of the daily continuing calibration verification. Continuing calibration verification EICP area within -50% to +100% of the internal standard responses in the ICAL midpoint standard.	Inspect mass spectrometer and gas chromatography for malfunctions; reanalyze all affected samples.

TABLE 5-14
Calibration and QC Requirements for Semivolatile Organic Compounds – SW8270C
PG&E Program Quality Assurance Project Plan

QC Check	Frequency	Criteria	Corrective Action
		Sample EICP area within -50% to +100% of the daily continuing calibration verification.	
Method Blank	At least one per analytical batch.	No analytes detected at or above the RL.	Correct the problem, re-prepare, and reanalyze all associated samples.
Surrogate Spike	Every standard, sample, method blank, MS/MSD and LCS.	At least two surrogates per fraction in samples, method blank and LCS within limits specified in Appendix A.	Correct the problem and reanalyze (re-prepare if necessary).
MS/MSD	One set per 20 project-specific samples.	Full target list spike required within limits specified in Appendix A.	None.
LCS	At least one per analytical batch.	Full target list spike required within limits specified in Appendix A.	Correct the problem, re-prepare, and reanalyze the LCS and all samples in the analytical batch.

Note:
DFTPP = decafluorotriphenylphosphene

TABLE 5-15
Calibration and QC Requirements for Polynuclear Aromatic Hydrocarbons – SW8270C SIM
PG&E Program Quality Assurance Project Plan

QC Check	Frequency	Criteria	Corrective Action
DFTPP Tuning	Prior to ICAL and calibration verification (every 12 hours).	Refer to criteria listed in the method.	Retune instrument and verify.
Multipoint ICAL (minimum 5 points)	Prior to sample analysis, or when calibration verification fails.	SPCCs average RF $\geq$0.050 and %RSD for RFs for CCCs $\leq$30% and one of the following options: Option 1 RSD for each analyte <15%. Option 2 Least squares regression r $\geq$0.990. Option 3 Nonlinear – Coefficient of Determination ≥0.99 (6 standards to used for a second order; 7 standards to be used for a third order).	Correct the problem and repeat the ICAL.

TABLE 5-15
Calibration and QC Requirements for Polynuclear Aromatic Hydrocarbons – SW8270C SIM
PG&E Program Quality Assurance Project Plan

QC Check	Frequency	Criteria	Corrective Action
Second-source Calibration Verification	Once for each multipoint ICAL.	All analytes within ±30% of expected value.	Correct the problem and repeat ICAL.
Continuing Calibration Verification	At the start of each analytical sequence and every 12 hours thereafter.	All analytes within ±20% of expected.	Correct the problem, recalibrate, and reanalyze all samples since the last acceptable continuing calibration verification.
Retention Time Window Calculated for Each Analyte	Each analyte.	Relative retention time of each analyte within ±0.06 relative retention time units of the ICAL.	Not applicable (used for identification of analyte).
Internal Standards	Each sample and QC sample, method blank, MS/MSD, and LCS.	Continuing calibration verification retention time within ±30 seconds from retention time of the ICAL midpoint standard. Sample retention time within ±30 seconds from retention time of the daily continuing calibration verification. Continuing calibration verification EICP area within -50% to +100% of the internal standard responses in the ICAL midpoint standard. Sample EICP area within -50% to +100% of the daily continuing calibration verification.	Inspect mass spectrometer and gas chromatography for malfunctions; reanalyze all affected samples.
Method Blank	At least one per analytical batch.	No analytes detected at or above the RL.	Correct the problem, re-prepare, and reanalyze all associated samples.
Surrogate Spike	Every standard, sample, method blank, MS/MSD and LCS.	At least two surrogates in samples, method blank and LCS within limits specified in Appendix A.	Correct the problem and reanalyze (re-prepare if necessary).
MS/MSD	One set per 20 project-specific samples.	Full target list spike required within limits specified in Appendix A.	None.
LCS	At least one per analytical batch.	Full target list spike required within limits specified in Appendix A.	Correct the problem, re-prepare, and reanalyze the LCS and all samples in the analytical batch.

SECTION 6

Data Reduction, Validation, and Reporting

6.1 Laboratory Data Management

Data reduction will be performed manually or by using appropriate computer software. Quantitation procedures specified for each method must be followed. If data reduction is performed manually, the documentation must include the formulas used. Computer software used for data reduction must have been previously verified by the laboratory for accuracy. Documentation of the software verification must be maintained in the laboratory. All data reduction documentation must allow re-creation of the calculations.

All data will undergo a minimum of three levels of review at the laboratory prior to release. The analyst performing the tests shall initially review 100 percent of the data. After the analyst's review has been completed, 100 percent of the data shall be reviewed independently by a senior analyst or by the section supervisor for accuracy, completeness and compliance with calibration, QC requirements, and holding times. Analyte identification and quantitation must be verified. Calibration and QC results will be compared with the applicable control limits. RLs should be reviewed to make sure they meet the project objectives. Results of multiple dilutions should be reviewed for consistency. Any discrepancies must be resolved and corrected. Laboratory qualifiers will be applied when there are nonconformances that could potentially affect data usability. These qualifiers must be properly defined as part of the deliverables. All issues that are relevant to the quality of the data must be addressed in a case narrative. The laboratory QC manager will review a minimum of 10 percent of data or deliverables generated for the PG&E Program against the project-specific requirements. A final data review will be conducted by the laboratory manager or client services representative to ensure that all required analyses were performed and that all documentation is complete.

The hardcopy and electronic data deliverable (EDD) laboratory reports for all samples and analyses will contain the information necessary to perform data evaluation.

The PG&E Program will request four types of deliverables from the laboratory, depending upon the DQOs of the individual project. The following is a synopsis of when it is appropriate to use each type deliverable:

- **Level 1.** Appropriate for screening-level sampling results. Noncritical project decisions are made using this data.
- **Level 2.** Appropriate for investigative sampling results that will be replaced with confirmatory data or results used for disposal purposes. Less critical project decisions are made using this data.

- **Level 3.** Appropriate for investigative, confirmatory, or closure results. Critical project decisions may be made using this data.
- **Level 4.** Appropriate for investigative, confirmatory, or closure results. Critical decisions may be made using this data and should be used for projects that require a high degree of confidence in the accuracy of the data.

Hardcopy deliverables (and a electronic copy in portable document format [PDF]), in summary format, equivalent to those specified in the latest versions of EPA *Contract Laboratory Program Statements of Work for Organics and Inorganics Analyses* are preferred. The laboratory data report should be organized in a format that facilitates identification and retrieval of data. Alternate reporting formats require approval from the program chemist or project chemist.

A Level 1 report will include, at a minimum, the following information (when applicable):

- Cover letter with the following information:
  - Title of report and laboratory unique report identification (e.g., sample delivery group number)
  - Project name and site location
  - Name and location of laboratory and second-site or subcontracted laboratory
  - Client name and address
  - Statement of authenticity and official signature and title of person authorizing release of the report
- Table of contents
- Summary of samples received that correlates field sample IDs with the laboratory IDs
- Laboratory qualifier flags and definitions
- Field identification number
- Date received
- Date prepared
- Date analyzed (and time of analysis if the holding time is less than or equal to 48 hours)
- Preparation and analytical methods
- Result for each analyte (dry-weight basis for soils)
- Percent solids results for soil samples
- Dilution factor (provide both diluted and undiluted results when available)
- Sample-specific RL adjusted for sample size, dilution/concentration

- Sample-specific MDL adjusted for sample size, dilution/concentration (when project objectives require reporting less than the RL)
- Units of measure
- Applicable flags for data associated with QC that are outside of control limits
- CoC forms

A Level 2 report will consist of all the elements included in a Level 1 deliverable plus the following:

- Case narrative that addresses the following:
  - Sample receipt discrepancies (e.g., bubbles in VOA samples or temperature exceedances)
  - Descriptions of all nonconformances in the sample receipt, handling, preparation, analytical and reporting processes, and the corrective action taken for each occurrence
  - Identification and justification for sample dilution
  - Serial dilution recoveries, if applicable (required in hardcopy format only)
  - Postdigestion spike recoveries, if applicable (required in hardcopy format only)
- Surrogate %Rs
- MS/MSD and LCS spike concentrations, native sample results, spiked sample results, %R, and RPDs between the MS and MSD results; associated QC limits must also be provided
- Method blank results
- Analytical batch reference number that cross references samples to QC sample analyses
- Completed sample receipt checklist

A Level 3 report will consist of all the elements included in Level 1 and 2 reports plus the following:

- Analytical sequence or laboratory run log that contains sufficient information to correlate samples reported in the summary results to the associated method QC information, such as initial and continuing calibration analyses
- Confirmation results
- Calibration blank results for inorganic analyses (required in hardcopy format only)
- ICP and ICP/MS interference check sample results that include true concentrations, measured concentrations, and the calculated %R of the elements included (required in hardcopy format only)
- Method of standard addition results, if applicable (required in hardcopy format only)

- Internal standard recovery and retention time information, as applicable
- ICAL summary, including standard concentrations, response factors, average response factors, RSDs or correlation coefficients, and calibration plots or equations, if applicable (required in hardcopy format only)
- Continuing calibration verification summary, including expected and recovered concentrations and percent differences (required in hardcopy format only)
- Instrument tuning and mass calibration information for gas chromatography/mass spectrometry and ICP/MS analyses
- Any other method-specific QC sample results

A Level 4 report will include all elements for Levels 1 through 3 and all of the associated raw data. It is imperative that the relative scale used for all chromatographic and other instrument data be supplied in a scale that facilitates review from hardcopy. Enlargements of sufficient size and clarity for complex areas of sample chromatograms will be provided. Additional information to be supplied includes the following:

- Sample preparation logs that include the following:
  - Preparation start and end times
  - Beginning and ending temperatures (e.g., water baths and digestion blocks)
- Each algorithm and an example calculation for at least one sample for each matrix analyzed
- Reconstructed total ion chromatograms or selected ion current profiles for each sample (or blank) analyzed and mass spectra(s) for each compound identified including the following:
  - Raw compound spectra
  - Enhanced or background spectra
  - Laboratory generated library spectra (for tentatively identified compounds, provide the reference mass spectra from software spectra library)
- Ion ratio information for dioxin/furan methods

6.2 Hardcopy and Electronic Deliverables

Within the timeframe specified in the laboratory statement of work, contract, or purchase order from sample receipt, the laboratory shall deliver two hardcopies and one PDF of documentation, as specified in this QAPP. In addition, the laboratory shall deliver one electronic copy of the data (i.e., EDD), as specified in the format described in Table 6-1 (or as directed in the project-specific addendum), on CD-ROM or by e-mail (in ASCII format) within the same timeframe (LabSpec-7 format [see Table 6-1]).

All electronic data files shall match the final hardcopy results. CH2M HILL requires receipt of final hardcopy results with electronic files.

All raw data will be maintained in the laboratory and will be available upon request, if not required by the project-specific deliverable. Complete documentation of sample preparation and analysis and associated QC information will be maintained in a manner that allows easy retrieval if additional validation or information is required. Appropriate back-up procedures must be implemented by the laboratory for data that are stored electronically. All data generated using gas chromatography/mass spectrometry must be maintained on COD-ROM or equivalent format and provided to CH2M HILL upon request. All documentation must be retained for a minimum of 5 years after data acquisition.

The primary responsibility for implementing these procedures in the laboratory will reside with the laboratory manager or equivalent. The laboratory manager will approve laboratory reports before submittal.

6.3 Data Validation and Verification

Depending on the project-specific objectives, the analytical results of the data collection effort will be validated by CH2M HILL. In general, there will be different levels of validation employed for the PG&E Program that correspond to the reports described in Section 6.1. In some instances a Level 3 or Level 4 data package may be obtained from the laboratory, but only a Level 1 or Level 2 validation may be conducted. Specific validation levels will be identified in the site-specific SAP or QAPP addendum. Validation of Levels 1 through 4 will always be performed by the project chemist or designee. The levels are summarized as follows:

Level 1 Import the laboratory results into the project database; use automated data validation (AutoDV), as applicable, to the project database. Verify that samples were analyzed by the methods requested, and review the data for outliers and anomalies. Prepare a brief summary validation report.

Level 2 Import the laboratory results into the project database; use AutoDV as applicable, to the project database. Verify that samples were analyzed by the methods requested, review the laboratory case narrative for events in the laboratory that affect the accuracy or precision of the data, review QC indicator data, and perform a cursory review of the data. Prepare a summary validation report.

Level 2B Import the Laboratory results into the project database; use AutoDV, as applicable, to the project database. Verify that samples were analyzed by the methods requested, review the laboratory case narrative for events in the laboratory that affect the accuracy or precision of the data, review QC indicator data, and perform a cursory review of the data. Review specific raw data, as specified in the QAPP addendum, and compare the current data with historical data. Prepare a summary validation report.

Level 3 Import the laboratory results into the project database; use AutoDV, as applicable, to the project database. Validate the analytical data, as described in the following sections, without reviewing any raw data or analyte verification. Prepare a summary validation report.

Level 3B Import the laboratory results into the project database; use AutoDV, as applicable, to the project database. Validate the analytical data as described in the following sections with review of specific raw data, as specified in the QAPP addendum, and compare the current data with historical data. Prepare a summary validation report.

Level 4 Import the laboratory results into the project database; use AutoDV, as applicable, to the project database. Validate analytical data as described in the following sections, including a review of the analytical raw data, and compare the current data with historical data. Prepare a summary validation report.

6.4 Level 3 and 4 Validation Procedures

Personnel involved in the data validation function will be independent of any data generation effort. The project chemist will have responsibility for oversight of the data validation effort. Data validation will be performed when the final data packages are received from the laboratory. Data validation will be performed on an analytical batch basis within each analytical report using the summary results of calibration and laboratory QC and the results from associated field samples. Data packages will be reviewed for all constituents of concern. Raw data will be reviewed when deemed necessary by the project chemist or as specified in QAPP addenda. Data validation procedures will include the following:

- Review of the data package for completeness
- Review of CoC records for discrepancies that might degrade data quality
- Review for compliance with holding time and QC frequency requirements
- Evaluation of all calibration and QC summary results against the project requirements
- Verification of analyte identification and calculations for at least 10 percent of the data
- Qualification of the data using appropriate qualifier flags, as necessary, to reflect data usability limitations
- Initiation of corrective actions, as necessary, based on the data review findings

Data validation will be patterned after the *Contract Laboratory National Functional Guidelines for Inorganic Data Review* (EPA, 2002) and *Contract Laboratory National Functional Guidelines for Organic Data Review* (EPA, 1999), substituting the calibration and QC requirements specified in this QAPP for those specified in the guidelines. The national functional guidelines will primarily be used as a guidance document for the application of data qualification criteria. The level of validation will be defined in the SAP or QAPP addendum.

The flagging criteria presented in Tables 6-2 and 6-3 will be used; the qualifier flags are defined in Table 6-4. Qualifier flags, if required, will be applied to the electronic sample results. A summary table of the data qualifications will be provided in the validation report. If multiple flags are required for a result, the most severe flag will be applied to the electronic result. The hierarchy of flags, from the most severe to the least severe, will be as follows: R, UJ, J, U.

A validation report will be generated for each method and sample delivery group. A copy of the validation report will be retained with the data package in the project chemistry file. The project chemist will be notified of any significant data quality problems.

TABLE 6-1A
Data Guidelines for Electronic Data Deliverables
PG&E Program Quality Assurance Project Plan

Field Number	Field Name	Data Type	Data Length	Requirement	Valid Values[a]	Description and Comments
1	VersionCode	Text	15	R	Yes	Code identifying the version of the EDD deliverable.
2	LabName	Text	10	R	Yes	Identification code for the laboratory performing the work. This value is used to distinguish between different facilities.
3	SDG	Text	15	R	No	Sample delivery group designation; always populated for all samples, including QC.
4	FieldID	Text	30	R	No	Client sample ID as appears on CoC forms with optional laboratory-assigned suffixes or prefixes to make it unique. If the sample ID on the CoC form and the prefix or suffix is more than 20 characters, abbreviate the value but make it unique. For laboratory QC samples (e.g., method blanks and laboratory control samples), use a unique laboratory sample ID.
5	NativeID	Text	30	R	No	Client sample ID, **exactly** as on CoC forms. **No prefix or suffix allowed** in client sample IDs. Used to identify the native sample from which other samples are derived (e.g., QAQCType = LR, MS, or SD). For laboratory QC samples (i.e., method blanks and laboratory control samples), use the FieldID value that was assigned. However, for laboratory blank spike duplicate samples, use the FieldID value that was assigned to the associated laboratory blank spike sample.
6	QAQCType	Text	2	R	Yes	The code for the sample type. Any field sample that is not used as laboratory QC and is not otherwise marked on the CoC forms should have the designation of “N” (normal field sample). No suffix allowed (i.e., do not add numbers as suffixes to the QAQCType values as called for in the ERPIMS guidelines). If all analyses for a given sample are diluted, the first dilution should be designated as the normal sample. If more dilutions are required, the next dilution should be designated as the first true dilution with a QAQCType value of “LR” and a LRType value of “DL” (see LRType,).

TABLE 6-1A
Data Guidelines for Electronic Data Deliverables
PG&E Program Quality Assurance Project Plan

Field Number	Field Name	Data Type	Data Length	Requirement	Valid Values[a]	Description and Comments
7	LRType	Text	3	C	Yes	This is the code for laboratory replicate sample type. Values are as follows: • Blank (if QAQCType value is not LR) • DL (dilution) • RE (re-analysis) • D (inorganic duplicate) • CF (confirmation) For multiple dilutions or reanalyses of the same sample, append the replicate number after the LRType value (e.g., RE, RE2, and RE3).
8	Matrix	Text	5	R	Yes	Sample matrix code. Valid values are as follows: “AIR”, “WATER”, or “SOIL” unless otherwise provided by the project data manager and marked on CoC forms. The use of other terms (e.g., “liquid” or “solid”) for laboratory QC is not allowed.
9	LabSampleID	Text	12	R	No	Laboratory sample ID assigned by the laboratory. Prefix or suffix is allowed. Dilutions or re-extractions are noted here. For example, “D97-11111RE” is acceptable.
10	AnalysisMethod	Text	20	R	Yes	Analysis method code. This is the ID of the analytical method performed on the sample. For example, “SW8260A.” Generic names such as “EPA” should not be used.
11	ExtractionMethod	Text	20	R	Yes	Preparation method code. A value in this field is required. If the preparation is described in the method, use “METHOD”. If there is no separate preparation required, use “NONE”. Total and dissolved metal analyses are differentiated by the value in this column. Total, TCLP, and SPLP analyses are differentiated by the value in the LeachMethod column (see below).
12	SampleDate	Date		C	No	Date of sample collection. A value is required for all samples sent to the laboratory and samples derived from those samples. Format = mm/dd/yyyy.
13	SampleTime	Time		C	No	Time of sample collection. A value is required for all samples sent to the laboratory and samples derived from those samples. Twenty-four-hour format (hh:mm).
14	ReceiveDate	Date		C	No	Date of sample receipt in the laboratory. A value is required for all samples sent to the laboratory and samples derived from those samples. Format = mm/dd/yyyy.

TABLE 6-1A
Data Guidelines for Electronic Data Deliverables
PG&E Program Quality Assurance Project Plan

Field Number	Field Name	Data Type	Data Length	Requirement	Valid Values[a]	Description and Comments
15	ExtractDate	Date		C	No	Date of sample preparation (extraction or digestion). A value is required if the ExtractionMethod field value is other than “NONE”. Format = mm/dd/yyyy
16	ExtractTime	Time		C	No	Time of sample preparation. A value is required if the ExtractionMethod field value is other than “NONE”. Twenty-four-hour format (hh:mm).
17	AnalysisDate	Date		R	No	Date of sample analysis. A value is required for all records. Format = mm/dd/yyyy
18	AnalysisTime	Time		R	No	Time of sample analysis. A value is required for all records. Twenty-four-hour format (hh:mm).
19	PercentSolids	Number		R	No	Percent solids within the sample; should be zero for water samples.
20	LabLotCtlNum	Text	10	C	No	ID for an autonomous group of environmental samples and associated QC samples prepared together. For example, the value can be a digestion or extraction batch ID. If there is no separate extraction or preparation performed, the field is left blank.
21	CAS	Text	20	R	No	CAS registry number of analyte, if available.
22	ParamID	Text	12	R	Yes	Parameter ID code for the parameter listed in the Analyte field.
23	Analyte	Text	60	R	No	Name of analyte, chemical name.
24	Result	Text	10	R	No	Result of the analysis. Surrogate analytes are reported in units of percent. All others are reported in sample concentration units. If undetected, report the adjusted MDL or adjusted RL, depending on the project. (Reported as a text field to preserve significant figures.)
25	ExpectedValue	Number		C	No	Report “100” for surrogates; report “0” for blanks; spike level plus parent result for LCS, and MS/MSD; parent value for laboratory duplicate.
26	Units	Text	10	R	Yes	Units of measure used in the analysis. Report “PERCENT” for surrogate analytes; report concentration units for all others.
27	Dilution	Number		R	No	Total dilution reported in the analysis. Default value is “1”. This value reflects changes to sample preparation amounts as defined by the method (e.g., less sample used for standard VOC analysis).

TABLE 6-1A
Data Guidelines for Electronic Data Deliverables
PG&E Program Quality Assurance Project Plan

Field Number	Field Name	Data Type	Data Length	Requirement	Valid Values[a]	Description and Comments
28	MDL	Number		C	No	Minimum detection limit adjusted for preparation and dilution. This value may be the method detection limit or the instrument detection limit, depending on the method and the project requirements. This value is **not** adjusted for percent moisture.
29	RL	Number		C	No	Reporting limit adjusted for preparation and dilution. Value is **not** adjusted for percent moisture. Equivalent to PQL.
30	LabQualifier	Text	6	R	No	Laboratory qualifier for the results, as reported on the hardcopy. Use "=" as first (or only) qualifier value for detected results if there are no other qualifiers for the result.
31	Surrogate	Text	1	R	Yes	If the chemical is a surrogate = Y; if not = N.
32	Comments	Text	240	O	No	Comment field.
33	ParValUncert	Text	16	C	No	Radiological parameter value uncertainty.
34	Recovery	Number		C	No	Percent recovery for MS, SD, LCS, LCSD, and surrogate compounds.
35	LowerControlLimit	Number		C	No	Lower control limit value for spiked compounds, expressed in units of percent. A value in this field is required if there is a value in the Recovery field (Field 34).
36	UpperControlLimit	Number		C	No	Upper control limit value for spiked compounds, expressed in units of percent. A value in this field is required if there is a value in the Recovery field (Field 34).
37	Basis	Text	1	R	Yes	Weight basis for soil (or solid) sample analysis; D = dry-weight basis, W = wet-weight basis, and X = not applicable.
38	ConcQual	Text	1	R	Yes	Concentration qualifier. Use "=" for detects, "J" for estimated value (value between detection limit and reporting limit), "U" for undetected result, and "E" for exceeded result.
39	MDLAdjusted	Number		C	No	Minimum detection limit adjusted for preparation, dilution **and percent moisture**. See the description of the MDL field (Field 28) for an explanation of the contents of this field.
40	RLAdjusted	Number		C	No	Reporting limit adjusted for preparation, dilution **and percent moisture**. Equivalent to PQL

TABLE 6-1A
Data Guidelines for Electronic Data Deliverables
PG&E Program Quality Assurance Project Plan

Field Number	Field Name	Data Type	Data Length	Requirement	Valid Values[a]	Description and Comments
41	SampleDescription	Text	30	C	No	Full sample ID as it appears on CoC forms. In some cases, this may be the name of the sampling location instead of the sample. Required for all samples that are either collected in the field and specified on CoC forms, or derived from samples that are collected in the field and specified on COC forms.
42	LeachMethod	Text	20	R	Yes	Analytical method used for leaching the sample; applies to TCLP, SPLP, or other leaching or pre-extraction leaching procedures. Use “NONE” if the sample was not leached.
43	LeachDate	Date		C	No	Date that the leaching method was performed (use the start date for multidate leaching procedures). Value is required if the LeachMethod field value is other then “NONE”. Format = mm/dd/yyyy.
44	LeachTime	Time		C	No	Time that the leaching procedure started. Value is required if the LeachMethod field value is other then “NONE”. Twenty-four-hour format (hh:mm).
45	LeachLot	Text	10	C	No	ID of an autonomous group of environmental samples and associated QC samples **leached** at the same time. Value is required if the LeachMethod field value is other then “NONE”. If the sample was not leached, the field is left blank.
46	AnalysisLot	Text	10	R	No	ID of an autonomous group of environmental samples and associated QC samples **analyzed** together. A value in this field is required (i.e., it should not be blank).
47	CalRefID	Text	10	C	No	ID of a group of environmental and QC samples linked by a common set of calibration records. All results with the same CalRefID value will have had the same initial calibration run.

[a]For a list of valid values see Table 6-1B.

Notes:
The EDD file from the laboratory will be a comma-delimited ASCII file in the format listed above. There will be one EDD file per hardcopy report and the filename of the EDD file will be in the format REPORTID.csv, where REPORTID is the hardcopy report ID of sample delivery group.
C = Conditionally Required
EPRIMS = Environmental Restoration Program Information Management System
R = Required

TABLE 6-1B
Values for Data Guidelines for Electronic Data Deliverables
PG&E Program Quality Assurance Project Plan

Field Name	Valid Values	Meaning
VersionCode	4.20AFCEE3	Format 4.20, AFCEE data values. LabQualifier field contains the laboratory qualifier values defined in the AFCEE QAPP, Version 3.0.
VersionCode	4.20EPACLP	Format 4.20, EPA data values. LabQualifier field contains the standard EPA CLP laboratory qualifiers.
QAQCType	N	Normal, environmental sample
QAQCType	LB	Laboratory method blank
QAQCType	MS	Laboratory matrix spike sample
QAQCType	SD	Laboratory matrix spike duplicate
QAQCType	LR	Laboratory replicate (dilution, re-analysis, duplicate)
QAQCType	BS	Laboratory method blank spike
QAQCType	BD	Laboratory method blank spike duplicate
LRType	DL	First dilution sample
LRType	DL2	Second dilution sample
LRType	DL3	Third dilution sample
LRType	RE	First re-analysis/re-extraction sample
LRType	RE2	Second re-analysis/re-extraction sample
LRType	RE3	Third re-analysis/re-extraction sample
LRType	D	Inorganic duplicate sample
LRType	CF	First confirmation analysis sample
LRType	CF2	Second confirmation analysis sample
LRType	CF3	Third confirmation analysis sample
AnalysisMethod	SW8260A	Volatiles by method 8260A in EPA SW846.
AnalysisMethod	SW8270	Semivolatiles by method 8270 in EPA SW846.
AnalysisMethod	SW6010	ICP metals by method 6010 in EPA SW846.
AnalysisMethod	SW7060	GFAA arsenic by method 7060 in EPA SW846.
ExtractionMethod	FLDFLT	Field filtration for dissolved metals analysis
ExtractionMethod	C3050	CLP-modified SW3050 acid digestion for metals analysis in soil samples.
ExtractionMethod	SW1311	TCLP extraction
ExtractionMethod	DISWAT	Distilled water extraction for analytes in soil samples.
ExtractionMethod	SW3510	Separatory funnel extraction
ExtractionMethod	SW3540	Soxhlet extraction
ExtractionMethod	TOTAL	Digestion of unfiltered waters for total metals analysis

TABLE 6-1B
Values for Data Guidelines for Electronic Data Deliverables
PG&E Program Quality Assurance Project Plan

Field Name	Valid Values	Meaning
ParamID	ACE	Acetone
ParamID	AS	Arsenic
ParamID	BHCGAMMA	gamma-BHC (Lindane)
ParamID	BZ	Benzene
ParamID	CDS	Carbon disulfide
ParamID	PB	Lead
ParamID	PHENOL	Phenol
ParamID	SE	Selenium
ParamID	TCE	Trichloroethene

TABLE 6-2
Flagging Conventions for Organic Methods
PG&E Program Quality Assurance Project Plan

Quality Control Check	Evaluation	Flag	Samples Affected
Holding Time	Holding time exceeded for extraction or analysis	J = positive results; UJ = nondetects	Sample
	Holding time exceeded by a factor of two	J = positive results; R = nondetects	
Sample Preservation SW8260B	Sample not preserved	J = positive results; UJ = nondetects	Sample
Sample Integrity SW8260B	Bubbles in VOA vial used for analysis	J = positive hits; UJ = nondetects	Sample
Temperature	>6°C	J = positive results; UJ = nondetects	All samples in same cooler
ICAL	RRF <0.050, <0.010 for poor responders (SW8260B and SW8270C)	J = positive results, R = nondetects	All associated samples in analysis batch
	%RSD >20.0% (SW8260B and SW8270C), or >20% (SW8015B, SW8081A, SW8082, and SW8151A), **AND** calibration curve not used; **OR** calibration curve used, but with coefficient of correlation or determination <0.99	J = positive results, UJ = nondetects	
Calibration Verification (second-source and continuing calibration verification)	RRF <0.050, <0.010 for poor responders (SW8260B and SW8270C)	J = positive results, R = nondetects	All associated samples in analysis batch
	%D >25.0% (SW8260B and SW8270C) or >15% (SW8015B, SW8081A, SW8082, SW8151A	J = positive results, UJ = nondetects	
	%R >UT	J = positive results	All associated samples in analytical batch
	%R <LT	J = positive results, UJ = nondetects	
Laboratory Control Sample	%R >UT	J = positive results	All samples in preparation batch
	%R< LT	J = positive results, UJ = nondetects	
	%R <10%	J = positive results; R = nondetects	
Calibration Blank Method Blank	Convert blank concentration to soil units, if applicable; multiply the highest blank concentration by five	U = positive sample results <5x highest blank concentration	All samples in preparation batch or analytical batch, whichever one applies, associated with method blank or calibration blank

TABLE 6-2
Flagging Conventions for Organic Methods
PG&E Program Quality Assurance Project Plan

Quality Control Check	Evaluation	Flag	Samples Affected
Equipment Blank Field Blank Ambient Blank			All samples, same site, matrix and date (water) or all samples, same site, matrix (soil) associated with equipment blank
Trip Blank			All samples shipped in the same cooler as the trip blank
MS/MSD			
%R	%R >UT	J = positive results	MS analytes in parent sample and field duplicate, if any.
	%R <LT	J = positive results; UJ = nondetects	
	%R <10%	J = positive results; R = nondetects	
RPDs	RPD >UT	J = positive results	MS analytes in parent sample and field duplicate, if any.
Surrogates			
SW8260B; SW8015B; SW8015B SW8081 SW8082; SW8151A; SW8310, SW8270CSIM	%R >UT	J = positive results	All analytes in sample
	%R <LT and none <10%	J = positive results; UJ = nondetects	
	%R <10%	J = positive results; R = nondetects	
SW8270C	2 or more surrogates in same fraction with %R >UT	J = positive results	All analytes in same fraction in sample
	2 or more surrogates in same fraction with %R <LT but not <10%	J = positive results; UJ = nondetects	
	2 or more surrogates in same fraction with %R <LT and <10%	J = positive results; R = nondetects	
Internal Standards (SW8260B; SW8270C, SW8270CSIM)	Area >UT	J = positive results; UJ = nondetects	Associated analytes in sample
	Area <LT but not <10%	J = positive results;	
	Area <10%	J = positive results; R = nondetects	

TABLE 6-2
Flagging Conventions for Organic Methods
PG&E Program Quality Assurance Project Plan

Quality Control Check	Evaluation	Flag	Samples Affected
Field Duplicates	Concentration of reported analytes are >5 times the RL in either sample and RPD >UT (30% for water samples; 50% for soil samples)	J = positive results	Field duplicate pair
	One or both sample results <5 times the RL and a difference of ±2 times the RL for water (±4 times for soil).	J = positive; UJ = nondetect	
Confirmation (SW8015B; SW8021B,SW8081A; SW8151A;)	RPD between primary and confirmation results > 25%	J = positive results	Sample

Notes:

All QA/QC criteria are included in Tables 5-3 through 5-15 and Appendix A and will be used for validation criteria.

Organic methods include SW8015B, SW8081A, SW8082, SW8151A, SW8260B, SW8270C, and SW8270C SIM.

Spike recovery limits do not apply when sample concentration exceeds the spike concentration by a factor of four or more.

For methods requiring confirmation, the qualifications apply to primary analysis results (either of the two columns/detectors may be designated as the primary column/detector).

Where one MS recovery meets acceptance criteria and the other MS of the pair does not, professional judgment may be used to determine if the parent sample should be qualified for matrix effects by comparing the MS recoveries to other QC results within the batch or sample site.

Qualifier may not apply in cases where a surrogate coelutes with a nontarget analyte.

Qualifier may not apply in cases where low surrogate recoveries are due to sample dilution.

< = less than
> = greater than
%R = percent recovery
LT = lower tolerance
UT = upper tolerance

TABLE 6-3
Flagging Conventions – Minimum Data Evaluation Criteria for Inorganic Methods
PG&E Program Quality Assurance Project Plan

Quality Control Check	Evaluation	Flag	Samples Affected
Holding Time	Holding time exceeded for extraction, digestion, or analysis	J = positive results; R = nondetects for mercury; UJ = nondetects for all other analytes	Sample
	Holding time for digestion or analysis exceeded by a factor of two	J = positive results; R = nondetects	
Sample Preservation	Sample preservation requirements not met (If sample preservation was not done in the field, but was performed at the laboratory upon sample receipt, no flagging is required)	J = positive results; R = nondetects	Sample
Temperature	>6°C (not applicable to metals except mercury)	J = positive results; UJ = nondetects	Samples in same cooler
ICAL (Multipoint only)	Correlation coefficient ≤0.995	J = positive; UJ = nondetects	All associated samples in analytical batch
Calibration verification (ICAL verification, continuing calibration verification)	%R >UT	J = positive results	All associated samples in analytical batch
	%R <LT	J = positive results, UJ = nondetects	
Interference check sample (SW6010B/SW6020 only)	%R >UT	J = positive results	All associated samples in analytical batch
	%R <LT	J = positive results; UJ = nondetects	
Laboratory Control Sample	%R >UT	J = positive results	All samples in preparation batch
	%R <LT	J = positive results; UJ = nondetects	
	%R <10%	J = positive results; R = nondetects	
Calibration Blank (ICB,CCB) Method Blank	Multiply the highest blank concentration by five	U = positive sample results <5x highest blank concentration	All samples in preparation batch or analytical batch, whichever one applies, associated with method blank or calibration blank
Equipment Blank			All samples, same site, matrix and date
MS/MSD	%R >UT	J = positive results	MS analytes in parent sample and field duplicate if applicable
	%R <LT	J = positive results; UJ = nondetects	
	%R <10%	J = positive results; R = nondetects	
	RPD >UT	J = positive results	

TABLE 6-3
Flagging Conventions – Minimum Data Evaluation Criteria for Inorganic Methods
PG&E Program Quality Assurance Project Plan

Quality Control Check	Evaluation	Flag	Samples Affected
MS Dilute and Spike for hexavalent chromium by Methods SW7199 or EPA218.6 (see Section 5.3.3.1)	Spike recovery 85-115% and peak within recovery time window. If criteria are not met, the laboratory is required to dilute two aliquots 1:5, spike one with 1 μg/L of hexavalent chromium and analyze the other unspiked. Continue the aforementioned procedure using successively greater dilutions of two aliquots until recovery time and recovery criteria are met.	Choose the dilution where the RT/recovery criteria are met. If RT/recovery criteria are met at a 1:1 dilution, data qualification is not required for detected or nondetected results. If RT/recovery criteria met at dilution greater than a 1:1, elevate the RL for nondetected results and qualify the data U at a level equal to the RL multiplied by the dilution factor of the acceptable analysis (apply ValAdj validation reason). If RT/recovery criteria are not met: a) Analysis performed only at a 1:1 dilution: J positive results (apply LabA&P validation reason) UJ or R nondetects determined in conjunction with Project Chemist (apply LabA&P validation reason) b) Analysis performed at subsequent dilutions and criteria are still not met: J flag positive apply LabA&P validation reason) Elevate RL - UJ or R nondetects, determined in conjunction with project chemist (apply LabA&P validation reason)	Sample
Post digestion Spikes/Recovery Test (Metals only) (Step 1 - following MS/MSD, only required if the MS/MSD fails)	Spike results indicate performance of Dilution Test required (i.e. MS/MSD Failed), but Dilution Test not done.	J = positive results, UJ = nondetects	All samples in digestion batch if Dilution test not performed
	%R >UT	J = positive	
	%R <LT	J = positive results, UJ = nondetects	

TABLE 6-3
Flagging Conventions – Minimum Data Evaluation Criteria for Inorganic Methods
PG&E Program Quality Assurance Project Plan

Quality Control Check	Evaluation	Flag	Samples Affected
Dilution Test (Step 2 - following Post digestion spike, only required if the PDS fails)	If concentration is >25 times the RL and percent difference >UT	J = positive results UJ = nondetects	Analytes in parent sample if analytical spike not performed
MSA (GFAA only) for samples where postdigestion spike (performed as a result of unacceptable serial dilution) fails	r <0.995	J = positive results	Sample
Field Duplicates Laboratory Sample Duplicates	Concentration of reported analytes are >5 times the RL in either sample and RPD >20%	J = positive results	Field duplicate pair
	One or both sample results <5 times the RL and a difference of ±2 times the RL	J = positive results; UJ = nondetects	

Notes:

< = less than

> = greater than

All QA/QC criteria are included in Tables 5-3 through 5-15 and Appendix A and will be used for validation criteria.

Spike recovery limits do not apply when sample concentration exceeds the spike concentration by a factor of four or more.

CCB = continuing calibration blank

ICB = Initial calibration blank

LabA&P = laboratory accuracy and precision criteria not met

LT = lower tolerance

MSA = method of standard addition

UT = upper tolerance

ValAdj = Value reported by laboratory adjusted because of matrix issues.

TABLE 6-5
Qualifier Flag Definitions
PG&E Program Quality Assurance Project Plan

Flag	Definition
J	Analyte was present but reported value may not be accurate or precise.
R	The result has been rejected.
U	Analyte was analyzed for but not detected at the specified detection limit.
UJ	Analyte was not detected above the detection limit objective; however, the reported detection limit is approximate and might not represent the actual limit of quantitation necessary to accurately and precisely measure the analyte in the sample.

SECTION 7

Performance Evaluations

To assess sample and data collection procedures, performance evaluations will be conducted that include of technical systems audits and performance audits.

7.1 Technical Systems Audits

7.1.1 Laboratory Audits

The laboratories participating in the data collection effort will be prequalified by the project management teams. A surveillance audit program that requires routine technical system audits will be instituted. Laboratory prequalification and the surveillance audits may also be undertaken by regulatory agencies. Laboratory prequalification audits may be performed as onsite audits, desk audits, or a combination of both, depending on the scale and sensitivity of the project.

7.1.1.1 Onsite Laboratory Prequalification Audit

An onsite laboratory prequalification audit in conjunction with a desk audit (see Section 7.1.1.2) is the preferred audit when using a new laboratory. The onsite laboratory audit will start with a pre-audit meeting during which the auditor will discuss with the laboratory staff the purpose of the audit, the schedule and areas to be audited, and the procedures that will be followed. The meeting may include a brief tour of the laboratory. The audit will then be conducted. The auditor will assemble the findings at the conclusion of the audit and discuss the findings with laboratory staff.

Critical items that will be addressed in a technical system audit include, but may not be limited to, the following:

- Calibration procedures and documentation
- Treatment and handling of standards
- Completeness of data forms, notebooks, and other reporting requirements
- Data review and verification procedures
- Data storage, filing, and recordkeeping procedures
- Sample custody procedures
- QC procedures, tolerances, and documentation
- Operating conditions of facilities and equipment
- Documentation of staff training and instrument maintenance activities
- Systems and operations overview

A written audit report will be sent to the laboratory within a specified time. A copy of the audit report will be sent to the project manager, and a copy will be retained in the project files.

The need for follow-up action will be determined based on the laboratory's responses. If an audit identifies an unacceptable condition or unacceptable data, the laboratory will be responsible for developing and initiating corrective action to resolve the situation. The project manager will be notified if the nonconformance impacts the project and requires resources not normally available to the project team. In such cases, the project manager will decide whether resources to pursue corrective action will be made available.

7.1.1.2 Desk Prequalification Audit

In part, a prequalification audit is performed to provide a perspective of the laboratory operations and the internal auditing and data review processes. Noncritical samples, split samples, or performance evaluation samples will be sent to the laboratory as part of the prequalification audit to ascertain the laboratory's ability to produce quality data. Generally, this process starts by sending guidance documents (e.g., QAPP, SAP, and SOW) to the laboratory for review. After a review and confirmation, the laboratory will follow the guidance documents to the best of their ability and to the project chemist's satisfaction. The auditor will request copies of accreditation audits (e.g., ELAP, NELAP, or AFCEE), SOPs, an example data package, and the laboratory's quality assurance manual. After a review of the laboratory's documentation (including instrument output, analytical reports, and other documentation specific to a batch of samples), samples can be sent to the laboratory. The data will be validated by using the Level 4 protocol described in Section 6.3 and reviewing the laboratories QC documentation. The corrective actions described in Section 7.1.1.1 may also apply.

7.1.2 Field Audits

Field audits will be performed annually to verify the performance of field procedures. The audit will evaluate the following:

- Sample containers and preservatives
- Sample collection and identification procedures
- Sample custody, handling, and shipping procedures
- Equipment decontamination procedures
- Calibration of field instruments and performance of field tests
- Documentation of field activities, maintenance of field records, and document control

7.2 Performance Audits

7.2.1 Performance Evaluations

Laboratories are required to participate in a performance evaluation program, in accordance with the California ELAP. Any method or analyte failure in a performance evaluation that affects the certification status of the laboratory with the National Environmental Laboratory Accreditation Program or the state of California must be immediately communicated to the program chemist.

Blind performance evaluation samples will be submitted to the laboratories as deemed necessary by the project chemist or project team.

7.2.2 External Audits

Announced and unannounced audits of the field operations and laboratories may be conducted by CH2M HILL during any stage of the project.

7.2.3 Internal Audits

Annual audits of the laboratory shall be conducted by the laboratory's quality assurance officer. The audits shall verify, at a minimum, that written SOPs are being followed; standards are traceable to certified sources; documentation is complete; data review is being done effectively and is properly documented; and data reporting, including electronic and manual data transfer, is accurate and complete. All audit findings shall be documented in QA reports to management. Necessary corrective actions shall be taken within a reasonable timeframe. The quality assurance office shall verify that such actions are effective and complete and document their implementation in an audit closeout report to management.

SECTION 8

Preventive Maintenance

The primary objective of preventive maintenance is to promote the timely and effective completion of a data collection effort. The maintenance program should be designed to minimize the downtime of crucial sampling and analytical equipment caused by component failures. The maintenance program should establish the following:

- Maintenance responsibilities
- Maintenance schedules
- An adequate inventory of critical spare parts and equipment

8.1 Maintenance Responsibilities

Laboratory instrument maintenance is the responsibility of the participating laboratory. Generally, the laboratory manager or supervisor is responsible for the instruments in their work areas; they will establish maintenance procedures and schedules for each instrument. Laboratories should maintain service agreements with instrument manufacturers or a reputable service company to minimize downtime if there is an instrument malfunction.

Maintenance responsibilities for field equipment are assigned to the field team leader for specific sampling tasks. However, the field team using the equipment is responsible for checking the status of the equipment prior to use and reporting any problems encountered. The field team is also responsible for ensuring that critical spare parts are included as part of the field equipment checklist. Nonoperational field equipment should be removed from service and a replacement obtained. All field instruments will be properly protected against inclement weather conditions during the field investigation.

8.2 Maintenance Schedules

The effectiveness of any maintenance program depends, to a large extent, on adherence to specific maintenance schedules for each piece of equipment. Nonroutine maintenance activities are conducted as needed. Manufacturers' recommendations should provide the primary basis for establishing maintenance schedules. Service contracts may be used to implement maintenance schedules.

Each analytical instrument should be assigned an instrument logbook; all maintenance activities for will be the documented instrument in the logbook. Logbooks should contain the following information:

- Date of service
- Person performing the service
- Type of service performed and the reason for service
- Replacement parts installed, if appropriate
- Date of next scheduled service
- Any other useful information

8.3 Spare Parts

An adequate inventory of spare parts is required to minimize equipment down time. The inventory will include the following:

- Parts and supplies that are subject to frequent failure
- Parts and supplies that have limited useful lifetimes
- Parts and supplies that cannot be obtained in a timely manner should failure occur

Field managers and laboratory managers are responsible for maintaining an adequate inventory of spare parts. In addition to spare parts and supply inventories, an in-house source of backup equipment and instrumentation should be available.

SECTION 9

Data Assessment

9.1 Data Quality Assessment

All laboratory data will be evaluated according to the QA acceptance criteria specified in Tables 5-3 through 5-15 and Appendix A Limitations regarding data usability will be assigned, if appropriate, in accordance with the validation process described in Section 7. Field data will be evaluated according to the appropriate SOP.

9.2 Reconciliation with Project Objectives

The PG&E Program includes projects and sites with varying tasks and objectives. The procedure for data reconciliation will be a function of the project-specific objectives and will be addressed in the project-specific documents.

SECTION 10

Corrective Action

Corrective action may be required as a result of deviations from field or analytical procedures. Deficiencies identified in audits and data quality evaluations may also call for corrective action. All project personnel have the responsibility to identify, report, and solicit approval for corrective actions to resolve conditions that are adverse to data quality.

Tables 5-3 through 5-15 specify the corrective actions to be taken when deviations from calibration and QC acceptance criteria occur. Field and laboratory staff may encounter conditions requiring immediate corrective action that are not addressed in this QAPP, the SAPs, or QAPP addenda. These staff will document conditions and the results of corrective actions in a field logbook or laboratory nonconformance report and communicate their actions as soon as feasible to the appropriate people (field team leader, laboratory supervisor, project chemist, project manager, and if necessary, the PG&E Program quality manager) for immediate input. A mechanism must be in place to allow for supervisory review or client input, or both, for all deviations or deficiencies. A corrective action reporting system that requires immediate documentation of deviations or deficiencies and for supervisory review of the actions taken to correct them will be established. At a minimum, the corrective action report should include the following information:

- The type of deviation or deficiency
- The date of occurrence
- The impact of the deviation or deficiency, such as samples affected
- The corrective action taken
- Documentation that the process has been returned to control

The only time that a corrective action report may be waived is when a deviation or deficiency is immediately corrected and its impact is precluded. An example would be an unacceptable ICAL that is repeated before samples are analyzed.

Each corrective action report must be reviewed and approved by a person of authority, such as the field team leader or laboratory supervisor. The ultimate responsibility for the laboratory corrective action process is the QC manager, who must ensure that proper documentation, approval, and close out of all out-of-control or nonconformance events is performed. A nonconformance report will summarize each nonconformance condition. Corrective action reports that could potentially affect data quality must be brought to the attention of the project chemist. Report disposition will be the responsibility of the project chemist. The project manager may be notified about a particular report at the project chemist's discretion. Copies of corrective action reports must be maintained in the laboratory or field project files.

SECTION 11

Quality Assurance Reports

Where specified in the SAP, work plan, or QAPP addendum, a QA report or data quality evaluation will be submitted by the project chemist to the project manager on a predetermined interval established in the SAP or QAPP addendum. The report will summarize the results of the data validation and the data assessment. The results should be presented in a manner that facilitates decision making. For example, temporal data may be more effectively presented if supplemented by a time plot. Any significant quality problems and recommended solutions should be included in the report. Limitations on data usability identified during data validation should be highlighted. Results of the data assessment should be reconciled with the project objectives.

SECTION 12

Data Management

Electronic data associated with CH2M Hill projects will be used to generate validation reports, risk assessment calculations, modeling results, data summary tables, maps, and other figures. The data management will follow CH2M HILL standard procedures for environmental data collection. Other consultants or contractors may use other electronic data management programs, which will be described in the SAP or QAPP addendum. However, any system used must be capable of storing and managing the information as follows:

- Simple procedures to get rapid access to stored data
- Data entry methods of known accuracy and efficiency
- Well-documented validation procedures for electronic databases
- Sampling data management using unique sample IDs
- A sampling inventory of newly collected data and methods of sample inventory reconciliation
- Sample-specific attributes, including location IDs, sample type and media, and sample date
- Reporting and delivery formats to support data analysis and reduction

12.1 Archiving

Hardcopy and electronic versions will be archived in project files and on electronic archive tapes for the duration of the project, as specified in contractual agreements, or for a minimum of 5 years. All electronic data will be subject to routine back-up until it is archived for long-term retention.

12.2 Data Flow and Transfer

The data flow from the laboratory and field to the project staff and data users will be sufficiently documented to ensure that data are properly tracked, reviewed, and validated.

12.3 Record Keeping

In addition to the data management procedures for analytical data provided in Section 6.1, the laboratory will maintain electronic and hardcopy records sufficient to re-create each analytical event. At a minimum, laboratory will maintain the following records:

- Raw data, including instrument printouts, bench work sheets, and chromatograms, with compound identification and quantitation reports
- Laboratory-specific, written SOPs for each analytical method and QA/QC function implemental during the analysis of project samples

SECTION 13

References

Air Force Center for Environmental Excellence (AFCEE) (now the Air Force Center for Engineering and the Environment). 2006. *AFCEE Model Quality Assurance Project Plan.* Version 4.0.02 May.

CH2M HILL. 2004b. *PG&E Quality Assurance Project Plan*. June.

CH2M HILL. 2008. *PG&E Quality Assurance Project Plan, Revision 1*. December.

U.S. Environmental Protection Agency (EPA). 2002. *Contract Laboratory National Functional Guidelines for Inorganic Data Review*.

U.S. Environmental Protection Agency (EPA). 2001a. *EPA Requirements for Quality Assurance Project Plans*. EPA/240/B-01/003. March.

U.S. Environmental Protection Agency (EPA). 2001b. *EPA Requirements for Quality Management Plans*. EPA/240/B-01/002. March (Same document re-issued in March 2006).

U.S. Environmental Protection Agency (EPA). 2000. *EPA Guidance for the Data Quality Objective Process*. EPA QA/G-4. EPA/600/R-96/055. August.

U.S. Environmental Protection Agency (EPA). 1999. *Contract Laboratory Program National Functional Guidelines for Organic Data Review*. October.

U.S. Environmental Protection Agency (EPA). 1996. *Test Methods for Evaluating Solid Waste, Physical and Chemical Methods, SW-846, 3rd Edition, Update III, Section 1*.

U.S. Environmental Protection Agency (EPA). 1995. "Good Laboratory Practices" in *Principles and Guidance to Regulations for Ensuring Data Integrity in Automated Laboratory Operations*.

Table A-1
Reporting Limits, Accuracy, and Precession Limits for Soil
PG&E Program Quality Assurance Project Plan

Method	Constituent	CAS	Units	QAPP RL	EPA Regional Screening Levels - May 2012		EPA Regional Screening Levels - 2008		DTSC CHHSL		Most Stringent Screening Level[1]	Does RL Exceed Screening Level?	LCS Accuracy Control Limits (%R)		MS/MSD Accuracy Control Limits (%R)		Precision Soil
					Residential	Commercial	Residential	Commercial	Residential	Commercial			Lower Limit	Upper Limit	Lower Limit	Upper Limit	% RPD
SW 9012 or SW 9014	Cyanide	57-12-5	mg/kg	0.25	47	610	1,600	20,000	--	--	0,047	NO	*	*	*	*	30
Walkley-Black	Total organic carbon	TOC	mg/kg	50	--	--	--	--	--	--	--	NO	75	125	75	125	35
SW 9050	Specific conductance	Conductance	µmhos/cm	5	--	--	--	--	--	--	--	NO	75	125	75	125	20
SW 9045	pH	pH	pH units	0.1	--	--	--	--	--	--	--	NO	--	--	--	--	20
SM 2540 B/EPA 160.3	percent moisture	Moist	Percent	--	--	--	--	--	--	--	--	NO	--	--	--	--	20
EPA 300.0	Fluoride	Fluoride	mg/kg	2	--	--	4,700	61,000	--	--	4,700	NO	70	130	70	130	35
EPA 300.0	Chloride	Chloride	mg/kg	2	--	--	--	--	--	--	--	NO	70	130	70	130	35
EPA 300.0	Sulfate	Sulfate	mg/kg	2	--	--	--	--	--	--	--	NO	70	130	70	130	35
EPA 821/R-91-100	Sulfide, acid volatile	18496-25-8	mg/kg	80	--	--	--	--	--	--	--	NO	70	130	70	130	30
SW 7199	Chromium, hexavalent	18540-29-9	mg/kg	0.4	0.29	5.6	230	1,400	17	17	0.29	YES	85	115	85	115	20
SW 6010B or C/SW 6020A/EPA 200.7/EPA 200.8	Aluminum	7429-90-5	mg/kg	10	77,000	990,000	77,000	990,000	--	--	77,000	NO	85	115	75	125	20
SW 6010B or C/SW 6020A/EPA 200.7/EPA 200.8	Antimony	7440-36-0	mg/kg	2	31	410	31	410	30	380	30	NO	85	115	75	125	20
SW 6010B or C/SW 6020A/EPA 200.7/EPA 200.8	Arsenic	7440-38-2	mg/kg	0.5	0.39	1.6	0.39	1.6	0.07	0.42	0.07	YES	85	115	75	125	20
SW 6010B or C/SW 6020A/EPA 200.7/EPA 200.8	Barium	7440-39-3	mg/kg	1	15,000	190,000	15,000	190,000	5,200	63,000	5,200	NO	85	115	75	125	20
SW 6010B or C/SW 6020A/EPA 200.7/EPA 200.8	Beryllium	7440-41-7	mg/kg	0.5	160	2,000	160	2,000	150	1,700	150	NO	85	115	75	125	20
SW 6010B or C/SW 6020A/EPA 200.7/EPA 200.8	Cadmium	7440-43-9	mg/kg	0.5	70	800	70	810	1.7	7.5	1.7	NO	85	115	75	125	20
SW 6010B or C/EPA 200.7	Calcium	7440-70-2	mg/kg	100	--	--	--	--	--	--	--	NO	85	115	75	125	20
SW 6010B or C/SW 6020A/EPA 200.7/EPA 200.8	Chromium	7440-47-3	mg/kg	1	--	--	280	1,400	*	*	280	NO	85	115	75	125	20
SW 6010B or C/SW 6020A/EPA 200.7/EPA 200.8	Cobalt	7440-48-4	mg/kg	1	23	300	23	300	660	3,200	23	NO	85	115	75	125	20
SW 6010B or C/SW 6020A/EPA 200.7/EPA 200.8	Copper	7440-50-8	mg/kg	1	3,100	41,000	3,100	41,000	3,000	38,000	3,000	NO	85	115	75	125	20
SW 6010B or C/EPA 200.7	Iron	7439-89-6	mg/kg	10	55,000	720,000	55,000	720,000	--	--	55,000	NO	85	115	75	125	20
SW 6010B or C/SW 6020A/EPA 200.7/EPA 200.8	Lead	7439-92-1	mg/kg	1	400	800	400	800	150	3,500	150	NO	85	115	75	125	20
SW 6010B or C/EPA 200.7	Magnesium	7439-95-4	mg/kg	100	--	--	--	--	--	--	--	NO	85	115	75	125	20
SW 6010B or C/SW 6020A/EPA 200.7/EPA 200.8	Manganese	7439-96-5	mg/kg	1	--	--	1,800	23,000	--	--	1,800	NO	85	115	75	125	20
SW 7471A/EPA 245.5	Mercury	7439-97-6	mg/kg	0.1	10	43	6.7	28	18	180	6.7	NO	75	125	75	125	20
SW 6010B or C/SW 6020A/EPA 200.7/EPA 200.8	Molybdenum	7439-98-7	mg/kg	1	390	5,100	390	5,100	380	4,800	380	NO	85	115	75	125	20
SW 6010B or C/SW 6020A/EPA 200.7/EPA 200.8	Nickel	7440-02-0	mg/kg	1	1,500	20,000	1,600	20,000	1,600	16,000	1,500	NO	85	115	75	125	20
SW 6010B or C/EPA 200.7	Potassium	7440-09-1	mg/kg	100	--	--	--	--	--	--	--	NO	85	115	75	125	20
SW 6010B or C/SW 6020A/EPA 200.7/EPA 200.8	Selenium	7782-49-2	mg/kg	1	390	5,100	390	5,100	380	4,800	380	NO	85	115	75	125	20
SW 6010B or C/SW 6020A/EPA 200.7/EPA 200.8	Silver	7440-22-4	mg/kg	1	390	5,100	390	5,100	380	4,800	380	NO	85	115	75	125	20
SW 6010B or C/EPA 200.7	Sodium	7440-23-5	mg/kg	100	--	--	--	--	--	--	--	NO	85	115	75	125	20
SW 6010B or C/SW 6020A/EPA 200.7/EPA 200.8	Thallium	7440-28-0	mg/kg	2	0.78	10	5.1	66	5	63	0.78	YES	85	115	75	125	20
SW 6010B or C/SW 6020A/EPA 200.7/EPA 200.8	Vanadium	7440-62-2	mg/kg	1	--	--	550	7,200	530	6,700	530	NO	85	115	75	125	20
SW 6010B or C/SW 6020A/EPA 200.7/EPA 200.8	Zinc	7440-66-6	mg/kg	2	23,000	310,000	23,000	310,000	23,000	100,000	23,000	NO	85	115	75	125	20
SW 8015B or C or D	Motor Oil	TPH-motor oil	mg/kg	10	--	--	--	--	--	--	--	NO	60	120	60	120	50
SW 8015B or C or D	TPH-Diesel	TPH-diesel	mg/kg	10	--	--	--	--	--	--	--	NO	51	153	51	153	50
SW 8015B or C or D	TPH-Gasoline	TPH-gasoline	mg/kg	1	--	--	--	--	--	--	--	NO	57	146	57	146	50
SW 8081A or B	4,4'-DDD	72-54-8	ug/kg	4	2,000	7,200	2,000	7,200	2,300	9,000	2,000	NO	50	139	50	139	50
SW 8081A or B	4,4'-DDE	72-55-9	ug/kg	4	1,400	5,100	1,400	5,100	1,600	6,300	1,400	NO	68	126	68	126	50
SW 8081A or B	4,4'-DDT	50-29-3	ug/kg	4	1,700	7,000	1,700	7,000	1,600	6,300	1,600	NO	46	135	46	135	50
SW 8081A or B	Aldrin	309-00-2	ug/kg	4	29	100	29	100	33	130	29	NO	47	120	47	120	50
SW 8081A or B	alpha-HCH	319-84-6	ug/kg	4	77	270	77	270	--	--	77	NO	62	125	62	125	50
SW 8081A or B	alpha-Chlordane	5103-71-9	ug/kg	4	--	--	--	--	430	1,700	430	NO	63	121	63	121	50
SW 8081A or B	beta-HCH	319-85-7	ug/kg	4	270	960	320	1,300	--	--	270	NO	62	127	62	127	50
SW 8081A or B	delta-HCH	319-86-8	ug/kg	4	--	--	--	--	--	--	--	NO	57	130	57	130	50
SW 8081A or B	Dieldrin	60-57-1	ug/kg	4	30	110	30	110	35	130	30	NO	67	125	67	125	50
SW 8081A or B	Endosulfan I	959-98-8	ug/kg	4	--	--	--	--	--	--	--	NO	41	147	41	147	50
SW 8081A or B	Endosulfan II	33213-65-9	ug/kg	4	--	--	--	--	--	--	--	NO	37	141	37	141	50
SW 8081A or B	Endosulfan sulfate	1031-07-8	ug/kg	4	--	--	--	--	--	--	--	NO	62	135	62	135	50
SW 8081A or B	Endrin	72-20-8	ug/kg	4	18,000	180,000	18,000	180,000	21,000	230,000	18,000	NO	61	133	61	133	50
SW 8081A or B	Endrin aldehyde	7421-93-4	ug/kg	4	--	--	--	--	--	--	--	NO	37	147	37	147	50
SW 8081A or B	gamma-HCH (Lindane)	58-89-9	ug/kg	4	520	2,100	520	21,000	500	2,000	500	NO	59	123	59	123	50
SW 8081A or B	gamma-Chlordane	5103-74-2	ug/kg	4	--	--	--	--	430	1,700	430	NO	48	124	48	124	50
SW 8081A or B	Heptachlor	76-44-8	ug/kg	4	110	380	110	380	130	520	110	NO	51	140	51	140	50
SW 8081A or B	Heptachlor epoxide	1024-57-3	ug/kg	4	53	190	53	190	--	--	53	NO	66	130	66	130	50
SW 8081A or B	Methoxychlor	72-43-5	ug/kg	20	310,000	3,100,000	310,000	3,100,000	340,000	3,800,000	310,000	NO	57	143	57	143	50
SW 8081A or B	Toxaphene	8001-35-2	ug/kg	100	440	1,600	440	1,600	460	1,800	440	NO	31	136	31	136	50
SW 8082 or A	Aroclor-1016	12674-11-2	ug/kg	50	3,900	21,000	3,900	21,200	--	--	3,900	NO	41	138	41	138	50
SW 8082 or A	Aroclor-1221	11104-28-2	ug/kg	50	140	540	170	620	--	--	140	NO	45	136	45	136	50
SW 8082 or A	Aroclor-1232	11141-16-5	ug/kg	50	140	540	170	620	--	--	140	NO	45	136	45	136	50
SW 8082 or A	Aroclor-1242	53469-21-9	ug/kg	50	220	740	220	740	--	--	220	NO	43	150	43	150	50
SW 8082 or A	Aroclor-1248	12672-29-6	ug/kg	50	220	740	220	740	--	--	220	NO	44	136	44	136	50
SW 8082 or A	Aroclor-1254	11097-69-1	ug/kg	50	220	740	220	740	--	--	220	NO	41	141	41	141	50
SW 8082 or A	Aroclor-1260	11096-82-5	ug/kg	50	220	740	220	740	--	--	220	NO	61	131	61	131	50
SW 8082 or A	Total PCB	Total PCB	ug/kg	50	220	740	220	740	89	300	89	NO	--	--	--	--	--
SW 8151A	2,4-D	94-75-7	ug/kg	200	690,000	7,700,000	690	7,700	690	550	550	NO	32	121	32	121	50

Table A-1
Reporting Limits, Accuracy, and Precession Limits for Soil
PG&E Program Quality Assurance Project Plan

Method	Constituent	CAS	Units	QAPP RL	EPA Regional Screening Levels - May 2012		EPA Regional Screening Levels - 2008		DTSC CHHSL		Most Stringent Screening Level[1]	Does RL Exceed Screening Level?	LCS Accuracy Control Limits (%R)		MS/MSD Accuracy Control Limits (%R)		Precision Soil
					Residential	Commercial	Residential	Commercial	Residential	Commercial			Lower Limit	Upper Limit	Lower Limit	Upper Limit	% RPD
SW 8151A	2,4-DB	94-82-6	ug/kg	500	490,000	4,900,000	490	4,900	--	--	490	YES	42	145	42	145	50
SW 8151A	2,4,5-T	93-76-5	ug/kg	500	610,000	6,200,000	610	6,200	7,700	6,100	610	NO	43	139	43	139	50
SW 8151A	2,4,5-TP	93-72-1	ug/kg	200	490,000	4,900,000	490	4,900	--	--	490	NO	46	128	46	128	50
SW 8151A	Dalapon	75-99-0	ug/kg	100	1,800,000	18,000,000	1,800	18,000	--	--	1,800	NO	22	125	22	125	50
SW 8151A	Dicamba	1918-00-9	ug/kg	500	1,800,000	18,000,000	1,800	18,000	--	--	1,800	NO	56	120	56	120	50
SW 8151A	Dichloroprop	120-36-5	ug/kg	500	--	--	--	--	--	--	--	NO	72	142	72	142	50
SW 8151A	Dinoseb	88-85-7	ug/kg	100	61,000	620,000	61	620	--	--	61	YES	20	131	20	131	50
SW 8151A	MCPA	94-74-6	ug/kg	1,000	31,000	310,000	31	310	--	--	31	YES	65	120	65	120	50
SW 8151A	MCPP	7085-19-0	ug/kg	1,500	--	--	61	620	--	--	61	YES	60	118	60	118	50
SW 8260B or C	1,1,1,2-Tetrachloroethane	630-20-6	ug/kg	5	1,900	9,300	2,000	9,800	--	--	1,900	NO	74	125	74	125	30
SW 8260B or C	1,1,1-Trichloroethane (TCA)	71-55-6	ug/kg	5	8,700,000	38,000,000	9,000,000	39,000,000	--	--	8,700,000	NO	68	130	68	130	30
SW 8260B or C	1,1,2,2-Tetrachloroethane	79-34-5	ug/kg	5	560	2,800	590	2,900	--	--	560	NO	59	140	59	140	30
SW 8260B or C	1,1,2-Trichloroethane	79-00-5	ug/kg	5	1,100	5,300	1,100	5,500	--	--	1,100	NO	62	127	62	127	30
SW 8260B or C	1,1,2-Trichlorotrifluoroethane (Freon 113)	76-13-1	ug/kg	5	43,000,000	180,000,000	43,000,000	180,000,000	--	--	43,000,000	NO	65	135	65	135	30
SW 8260B or C	1,1-Dichloroethane	75-34-3	ug/kg	5	3,300	17,000	3,400	17,000	--	--	3,300	NO	73	125	73	125	30
SW 8260B or C	1,1-Dichloroethylene	75-35-4	ug/kg	5	240,000	1,100,000	250,000	1,100,000	--	--	240,000	NO	65	136	65	136	30
SW 8260B or C	1,1-Dichloropropene	563-58-6	ug/kg	5	--	--	--	--	--	--	--	NO	70	135	70	135	30
SW 8260B or C	1,2,3-Trichlorobenzene	87-61-6	ug/kg	5	49,000	490,000	--	--	--	--	49,000	NO	62	133	62	133	30
SW 8260B or C	1,2,3-Trichloropropane	96-18-4	ug/kg	5	5	95	91	410	--	--	5	NO	63	130	63	130	30
SW 8260B or C	1,2,4-Trichlorobenzene	120-82-1	ug/kg	5	22,000	99,000	87,000	400,000	--	--	22,000	NO	65	131	65	131	30
SW 8260B or C	1,2,4-Trimethylbenzene	95-63-6	ug/kg	5	62,000	260,000	67,000	280,000	--	--	62,000	NO	65	135	65	135	30
SW 8260B or C	1,2-Dibromo-3-chloropropane	96-12-8	ug/kg	5	5.4	69	5.6	73	--	--	5.4	NO	49	135	49	135	30
SW 8260B or C	1,2-Dibromoethane (EDB)	106-93-4	ug/kg	5	34	170	34	170	--	--	34	NO	70	124	70	124	30
SW 8260B or C	1,2-Dichlorobenzene	95-50-1	ug/kg	5	1,900,000	9,800,000	2,000,000	10,000,000	--	--	1,900,000	NO	74	120	74	120	30
SW 8260B or C	1,2-Dichloroethane (EDC)	107-06-2	ug/kg	5	430	2,200	450	2,200	--	--	430	NO	72	137	72	137	30
SW 8260B or C	1,2-Dichloropropane	78-87-5	ug/kg	5	940	4,700	930	4,700	--	--	930	NO	71	120	71	120	30
SW 8260B or C	1,3,5-Trimethylbenzene	108-67-8	ug/kg	5	780,000	10,000,000	47,000	200,000	--	--	47,000	NO	65	133	65	133	30
SW 8260B or C	1,3-Dichlorobenzene	541-73-1	ug/kg	5	--	--	--	--	--	--	--	NO	72	124	72	124	30
SW 8260B or C	1,3-Dichloropropane	142-28-9	ug/kg	5	1,600,000	20,000,000	1,600,000	20,000,000	--	--	1,600,000	NO	76	123	76	123	30
SW 8260B or C	1,4-Dichlorobenzene	106-46-7	ug/kg	5	2,400	12,000	2,600	13,000	--	--	2,400	NO	72	125	72	125	30
SW 8260B or C	2,2-Dichloropropane	594-20-7	ug/kg	5	--	--	--	--	--	--	--	NO	67	134	67	134	30
SW 8260B or C	2-Butanone (MEK)	78-93-3	ug/kg	50	28,000,000	200,000,000	28,000,000	190,000,000	--	--	28,000,000	NO	40	135	40	135	30
SW 8260B or C	2-Chlorotoluene	95-49-8	ug/kg	5	1,600,000	20,000,000	1,600,000	20,000,000	--	--	1,600,000	NO	69	128	69	128	30
SW 8260B or C	4-Chlorotoluene	106-43-4	ug/kg	5	1,600,000	20,000,000	5,500,000	72,000,000	--	--	1,600,000	NO	73	126	73	126	30
SW 8260B or C	4-Isopropyltoluene	99-87-6	ug/kg	6	--	--	--	--	--	--	--	NO	75	133	75	133	30
SW 8260B or C	4-Methyl-2-pentanone	108-10-1	ug/kg	50	5,300,000	53,000,000	5,300,000	52,000,000	--	--	5,300,000	NO	65	135	65	135	30
SW 8260B or C	Acetone	67-64-1	ug/kg	50	61,000,000	630,000,000	61,000,000	610,000,000	--	--	61,000,000	NO	40	141	40	141	30
SW 8260B or C	Acrolein	107-02-8	ug/kg	100	150	650	160	680	--	--	150	NO	65	135	65	135	30
SW 8260B or C	Acrylonitrile	107-13-1	ug/kg	50	240	1,200	240	1,200	--	--	240	NO	65	135	65	135	30
SW 8260B or C	Benzene	71-43-2	ug/kg	5	1,100	5,400	1,100	5,600	--	--	1,100	NO	73	126	73	126	30
SW 8260B or C	Bromobenzene	108-86-1	ug/kg	5	300,000	1,800,000	94,000	410,000	--	--	94,000	NO	66	121	66	121	30
SW 8260B or C	Bromochloromethane	74-97-5	ug/kg	5	160,000	680,000	--	--	--	--	160,000	NO	71	127	71	127	30
SW 8260B or C	Bromodichloromethane	75-27-4	ug/kg	5	270	1,400	10,000	46,000	--	--	0,270	NO	72	128	72	128	30
SW 8260B or C	Bromoform	75-25-2	ug/kg	6	62,000	220,000	61,000	220,000	--	--	61,000	NO	66	137	66	137	30
SW 8260B or C	Bromomethane	74-83-9	ug/kg	5	7,300	32,000	7,900	35,000	--	--	7,300	NO	45	141	45	141	30
SW 8260B or C	Carbon disulfide	75-15-0	ug/kg	5	820,000	3,700,000	670,000	3,000,000	--	--	670,000	NO	65	135	65	135	30
SW 8260B or C	Carbon tetrachloride	56-23-5	ug/kg	5	610	3,000	250	1,300	--	--	250	NO	67	133	67	133	30
SW 8260B or C	Chlorobenzene	108-90-7	ug/kg	5	290,000	1,400,000	310,000	1,500,000	--	--	290,000	NO	75	123	75	123	30
SW 8260B or C	Chloroethane	75-00-3	ug/kg	5	15,000,000	61,000,000	15,000,000	62,000,000	--	--	15,000,000	NO	41	141	41	141	30
SW 8260B or C	Chloroform	67-66-3	ug/kg	2	290	1,500	300	1,500	--	--	290	NO	72	124	72	124	30
SW 8260B or C	Chloromethane	74-87-3	ug/kg	5	120,000	500,000	1,700	8,400	--	--	1,700	NO	51	129	51	129	30
SW 8260B or C	cis-1,2-Dichloroethene	156-59-2	ug/kg	5	160,000	2,000,000	780,000	10,000,000	--	--	160,000	NO	67	125	67	125	30
SW 8260B or C	cis-1,3-Dichloropropene	10061-01-5	ug/kg	5	--	--	--	--	--	--	--	NO	72	126	72	126	30
SW 8260B or C	Dibromochloromethane	124-48-1	ug/kg	5	680	3,300	5,800	21,000	--	--	0,680	NO	66	130	66	130	30
SW 8260B or C	Dibromomethane	74-95-3	ug/kg	5	25,000	110,000	780,000	10,000,000	--	--	25,000	NO	73	128	73	128	30
SW 8260B or C	Dichlorodifluoromethane	75-71-8	ug/kg	5	94,000	400,000	190,000	780,000	--	--	94,000	NO	34	136	34	136	30
SW 8260B or C	Ethylbenzene	100-41-4	ug/kg	5	5,400	27,000	5,700	29,000	--	--	5,400	NO	74	127	74	127	30
SW 8260B or C	Hexachlorobutadiene	87-68-3	ug/kg	5	6,200	22,000	6,200	22,000	--	--	6,200	NO	53	142	53	142	30
SW 8260B or C	Isopropylbenzene (Cumene)	98-82-8	ug/kg	5	2,100,000	11,000,000	2,200,000	11,000,000	--	--	2,100,000	NO	77	129	77	129	30
SW 8260B or C	Methylene Chloride	75-09-2	ug/kg	5	56,000	960,000	1,100	5,400	--	--	1,100	NO	63	137	63	137	30
SW 8260B or C	Naphthalene	91-20-3	ug/kg	5	3,600	18,000	3,900	20,000	--	--	3,600	NO	51	135	51	135	30
SW 8260B or C	n-Butylbenzene	104-51-8	ug/kg	5	3,900,000	51,000,000	--	--	--	--	3,900,000	NO	65	138	65	138	30
SW 8260B or C	n-Propylbenzene	103-65-1	ug/kg	5	3,400,000	21,000,000	--	--	--	--	3,400,000	NO	63	135	63	135	30
SW 8260B or C	sec-Butylbenzene	135-98-8	ug/kg	5	--	--	--	--	--	--	--	NO	63	132	63	132	30
SW 8260B or C	Styrene	100-42-5	ug/kg	5	6,300,000	36,000,000	6,500,000	38,000,000	--	--	6,300,000	NO	74	128	74	128	30
SW 8260B or C	tert-Butyl Methyl Ether (MTBE)	1634-04-4	ug/kg	20	43,000	220,000	39,000	190,000	--	--	39,000	NO	50	135	50	135	30

Table A-1
Reporting Limits, Accuracy, and Precession Limits for Soil
PG&E Program Quality Assurance Project Plan

Method	Constituent	CAS	Units	QAPP RL	EPA Regional Screening Levels - May 2012		EPA Regional Screening Levels - 2008		DTSC CHHSL		Most Stringent Screening Level[1]	Does RL Exceed Screening Level?	LCS Accuracy Control Limits (%R)		MS/MSD Accuracy Control Limits (%R)		Precision Soil
					Residential	Commercial	Residential	Commercial	Residential	Commercial			Lower Limit	Upper Limit	Lower Limit	Upper Limit	% RPD
SW 8260B or C	tert-Butylbenzene	98-06-6	ug/kg	5	--	--	--	--	--	--	--	NO	65	132	65	132	30
SW 8260B or C	Tetrachloroethene	127-18-4	ug/kg	5	22,000	110,000	570	2,700	--	--	570	NO	67	139	67	139	30
SW 8260B or C	Toluene	108-88-3	ug/kg	5	5,000,000	45,000,000	5,000,000	46,000,000	--	--	5,000,000	NO	71	127	71	127	30
SW 8260B or C	trans-1,2-Dichloroethene	156-60-5	ug/kg	5	150,000	690,000	110,000	500,000	--	--	110,000	NO	66	134	66	134	30
SW 8260B or C	trans-1,3-Dichloropropene	10061-02-6	ug/kg	5	--	--	--	--	--	--	--	NO	65	127	65	127	30
SW 8260B or C	Trichloroethene	79-01-6	ug/kg	5	910	6,400	2,800	14,000	--	--	0,910	NO	77	124	77	124	30
SW 8260B or C	Trichlorofluoromethane (Freon 11)	75-69-4	ug/kg	5	790,000	3,400,000	800,000	3,400,000	--	--	790,000	NO	49	139	49	139	30
SW 8260B or C	Vinyl Chloride	75-01-4	ug/kg	5	60	1,700	60	1,700	--	--	60	NO	58	126	58	126	30
SW 8260B or C	Xylenes, Total	1330-20-7	ug/kg	15	630,000	2,700,000	600,000	2,600,000	--	--	600,000	NO	65	125	65	125	50
SW 8260B or C	m-Xylene	108-38-3	ug/kg	10	590,000	2,500,000	4,500,000	19,000,000	--	--	590,000	NO	79	126	79	126	30
SW 8260B or C	p-Xylene	106-42-3	ug/kg	10	600,000	2,600,000	4,700,000	20,000,000	--	--	600,000	NO	79	126	79	126	30
SW 8260B or C	o-Xylene	95-47-6	ug/kg	5	690,000	3,000,000	5,300,000	23,000,000	--	--	690,000	NO	77	125	77	125	30
SW 8270C or D	1,2,4-Trichlorobenzene	120-82-1	ug/kg	330	22,000	99,000	87,000	400,000	--	--	22,000	NO	44	125	44	125	30
SW 8270C or D	1,2-Dichlorobenzene	95-50-1	ug/kg	330	1,900,000	9,800,000	2,000,000	10,000,000	--	--	1,900,000	NO	45	125	45	125	30
SW 8270C or D	1,3-Dichlorobenzene	541-73-1	ug/kg	330	--	--	--	--	--	--	--	NO	39	125	39	125	30
SW 8270C or D	1,4-Dichlorobenzene	106-46-7	ug/kg	330	2,400	12,000	2,600	13,000	--	--	2,400	NO	35	125	35	125	30
SW 8270C or D	2,4,5-Trichlorophenol	95-95-4	ug/kg	700	6,100,000	62,000,000	6,100,000	62,000,000	--	--	6,100,000	NO	49	125	49	125	30
SW 8270C or D	2,4,6-Trichlorophenol	88-06-2	ug/kg	330	44,000	160,000	44,000	160,000	--	--	44,000	NO	43	125	43	125	30
SW 8270C or D	2,4-Dichlorophenol	120-83-2	ug/kg	330	180,000	1,800,000	180,000	1,800,000	--	--	180,000	NO	45	125	45	125	30
SW 8270C or D	2,4-Dimethylphenol	105-67-9	ug/kg	330	1,200,000	12,000,000	1,200,000	12,000,000	--	--	1,200,000	NO	32	125	32	125	30
SW 8270C or D	2,4-Dinitrophenol	51-28-5	ug/kg	700	120,000	1,200,000	120,000	1,200,000	--	--	120,000	NO	25	132	25	132	30
SW 8270C or D	2,4-Dinitrotoluene	121-14-2	ug/kg	330	1,600	5,500	120,000	1,200,000	--	--	1,600	NO	48	125	48	125	30
SW 8270C or D	2,6-Dinitrotoluene	606-20-2	ug/kg	330	61,000	620,000	61,000	620,000	--	--	61,000	NO	48	125	48	125	30
SW 8270C or D	2-Chloronaphthalene	91-58-7	ug/kg	330	6,300,000	82,000,000	6,300,000	82,000,000	--	--	6,300,000	NO	45	125	45	125	30
SW 8270C or D	2-Chlorophenol	95-57-8	ug/kg	330	390,000	5,100,000	390,000	5,100,000	--	--	390,000	NO	44	125	44	125	30
SW 8270C or D	2-Methylnaphthalene	91-57-6	ug/kg	330	230,000	2,200,000	310,000	4,100,000	--	--	230,000	NO	47	125	47	125	30
SW 8270C or D	2-Methylphenol (o-Cresol)	95-48-7	ug/kg	330	3,100,000	31,000,000	3,100,000	31,000,000	--	--	3,100,000	NO	40	125	40	125	30
SW 8270C or D	2-Nitroaniline	88-74-4	ug/kg	700	610,000	6,000,000	--	--	--	--	610,000	NO	44	125	44	125	30
SW 8270C or D	2-Nitrophenol	88-75-5	ug/kg	700	--	--	--	--	--	--	--	NO	42	125	42	125	30
SW 8270C or D	3,3'-Dichlorobenzidine	91-94-1	ug/kg	1,300	1,100	3,800	1,100	3,800	--	--	1,100	YES	25	128	25	128	30
SW 8270C or D	3-Nitroaniline	99-09-2	ug/kg	700	--	--	18,000	82,000	--	--	18,000	NO	27	125	27	125	30
SW 8270C or D	4,6-Dinitro-2-methylphenol	534-52-1	ug/kg	1600	4,900	49,000	6,100	62,000	--	--	4,900	NO	29	137	29	137	30
SW 8270C or D	4-Bromophenyl phenyl ether	101-55-3	ug/kg	330	--	--	--	--	--	--	--	NO	46	125	46	125	30
SW 8270C or D	4-Chloro-3-methylphenol	59-50-7	ug/kg	600	6,100,000	62,000,000	--	--	--	--	6,100,000	NO	46	125	46	125	30
SW 8270C or D	4-Chloroaniline	106-47-8	ug/kg	700	2,400	8,600	9,000	32,000	--	--	2,400	NO	10	125	10	125	30
SW 8270C or D	4-Chlorophenyl phenyl ether	7005-72-3	ug/kg	330	--	--	--	--	--	--	--	NO	47	125	47	125	30
SW 8270C or D	4-Methylphenol (p-Cresol)	106-44-5	ug/kg	330	6,100,000	62,000,000	310,000	3,100,000	--	--	310,000	NO	41	125	41	125	30
SW 8270C or D	4-Nitroaniline	100-01-6	ug/kg	700	24,000	86,000	23,000	82,000	--	--	23,000	NO	34	125	34	125	30
SW 8270C or D	4-Nitrophenol	100-02-7	ug/kg	700	--	--	--	--	--	--	--	NO	25	138	25	138	30
SW 8270C or D	Acenaphthene	83-32-9	ug/kg	330	3,400,000	33,000,000	3,400,000	33,000,000	--	--	3,400,000	NO	46	125	46	125	30
SW 8270C or D	Acenaphthylene	208-96-8	ug/kg	330	--	--	--	--	--	--	--	NO	44	125	44	125	30
SW 8270C or D	Anthracene	120-12-7	ug/kg	330	17,000,000	170,000,000	17,000,000	170,000,000	--	--	17,000,000	NO	53	125	53	125	30
SW 8270C or D	Benzo (a) anthracene	56-55-3	ug/kg	330	150	2,100	150	2,100	--	--	150	YES	52	125	52	125	30
SW 8270C or D	Benzo (a) pyrene	50-32-8	ug/kg	330	15	210	15	210	38	130	15	YES	50	125	50	125	30
SW 8270C or D	Benzo (b) fluoranthene	205-99-2	ug/kg	330	150	2,100	150	2,100	--	--	150	YES	45	125	45	125	30
SW 8270C or D	Benzo (g,h,i) perylene	191-24-2	ug/kg	330	--	--	--	--	--	--	--	NO	38	126	38	126	30
SW 8270C or D	Benzo (k) fluoranthene	207-08-9	ug/kg	330	1,500	21,000	1,500	21,000	--	--	1,500	NO	45	125	45	125	30
SW 8270C or D	Benzoic acid	65-85-0	ug/kg	5,000	240,000,000	2,500,000,000	240,000,000	2,500,000,000	--	--	240,000,000	NO	25	125	25	125	30
SW 8270C or D	Benzyl alcohol	100-51-6	ug/kg	330	6,100,000	62,000,000	31,000,000	310,000,000	--	--	6,100,000	NO	25	125	25	125	30
SW 8270C or D	bis (2-chloroethoxy) methane	111-91-1	ug/kg	330	180,000	1,800,000	180,000	1,800,000	--	--	180,000	NO	43	125	43	125	30
SW 8270C or D	bis (2-chloroethyl) ether	111-44-4	ug/kg	330	210	1,000	190	900	--	--	190	YES	38	125	38	125	30
SW 8270C or D	bis (2-chloroisopropyl) ether	108-60-1	ug/kg	330	4,600	22,000	3,500	17,000	--	--	3,500	NO	25	125	25	125	30
SW 8270C or D	bis (2-ethylhexyl) phthalate	117-81-7	ug/kg	330	35,000	120,000	35,000	120,000	--	--	35,000	NO	47	127	47	127	30
SW 8270C or D	Butyl benzylphthalate	85-68-7	ug/kg	1000	260,000	910,000	260,000	910,000	--	--	260,000	NO	49	125	49	125	30
SW 8270C or D	Chrysene	218-01-9	ug/kg	330	15,000	210,000	15,000	210,000	--	--	15,000	NO	53	125	53	125	30
SW 8270C or D	Dibenzo (a,h) anthracene	53-70-3	ug/kg	330	15	210	15	210	--	--	15	YES	41	125	41	125	30
SW 8270C or D	Dibenzofuran	132-64-9	ug/kg	330	78,000	1,000,000	--	--	--	--	78,000	NO	51	125	51	125	30
SW 8270C or D	Diethyl phthalate	84-66-2	ug/kg	330	49,000,000	490,000,000	49,000,000	490,000,000	--	--	49,000,000	NO	50	125	50	125	30
SW 8270C or D	Dimethyl phthalate	131-11-3	ug/kg	330	--	--	--	--	--	--	--	NO	49	125	49	125	30
SW 8270C or D	Di-n-butylphthalate	84-74-2	ug/kg	330	6,100,000	62,000,000	6,100,000	62,000,000	--	--	6,100,000	NO	56	125	56	125	30
SW 8270C or D	Di-n-octylphthalate	117-84-0	ug/kg	1000	--	--	--	--	--	--	--	NO	41	132	41	132	30
SW 8270C or D	Fluoranthene	206-44-0	ug/kg	330	2,300,000	22,000,000	2,300,000	22,000,000	--	--	2,300,000	NO	54	125	54	125	30
SW 8270C or D	Fluorene	86-73-7	ug/kg	330	2,300,000	22,000,000	2,300,000	22,000,000	--	--	2,300,000	NO	49	125	49	125	30
SW 8270C or D	Hexachlorobenzene	118-74-1	ug/kg	330	300	1,100	300	1,100	--	--	300	YES	47	125	47	125	30
SW 8270C or D	Hexachlorobutadiene	87-68-3	ug/kg	330	6,200	22,000	6,200	22,000	--	--	6,200	NO	40	125	40	125	30
SW 8270C or D	Hexachloroethane	67-72-1	ug/kg	330	12,000	43,000	35,000	120,000	--	--	12,000	NO	34	125	34	125	30

Table A-1
Reporting Limits, Accuracy, and Precession Limits for Soil
PG&E Program Quality Assurance Project Plan

Method	Constituent	CAS	Units	QAPP RL	EPA Regional Screening Levels - May 2012		EPA Regional Screening Levels - 2008		DTSC CHHSL		Most Stringent Screening Level[1]	Does RL Exceed Screening Level?	LCS Accuracy Control Limits (%R)		MS/MSD Accuracy Control Limits (%R)		Precision Soil
					Residential	Commercial	Residential	Commercial	Residential	Commercial			Lower Limit	Upper Limit	Lower Limit	Upper Limit	% RPD
SW 8270C or D	Indeno (1,2,3-c,d) pyrene	193-39-5	ug/kg	330	150	2,100	150	2,100	--	--	150	YES	38	125	38	125	30
SW 8270C or D	Isophorone	78-59-1	ug/kg	330	510,000	1,800,000	510,000	1,800,000	--	--	510,000	NO	43	125	43	125	30
SW 8270C or D	Naphthalene	91-20-3	ug/kg	330	3,600	18,000	3,900	20,000	--	--	3,600	NO	40	125	40	125	30
SW 8270C or D	Nitrobenzene	98-95-3	ug/kg	330	4,800	24,000	31,000	280,000	--	--	4,800	NO	41	125	41	125	30
SW 8270C or D	n-Nitrosodi-n-propylamine	621-64-7	ug/kg	330	69	250	69	250	--	--	69	YES	40	125	40	125	30
SW 8270C or D	n-Nitrosodiphenylamine	86-30-6	ug/kg	330	99,000	350,000	99,000	350,000	--	--	99,000	NO	49	125	49	125	30
SW 8270C or D	Pentachlorophenol	87-86-5	ug/kg	700	890	2,700	3,000	9,000	4,400	13,000	0,890	NO	25	125	25	125	30
SW 8270C or D	Phenanthrene	85-01-8	ug/kg	330	--	--	--	--	--	--	--	NO	50	125	50	125	30
SW 8270C or D	Phenol	108-95-2	ug/kg	330	18,000,000	180,000,000	18,000,000	180,000,000	--	--	18,000,000	NO	39	125	39	125	30
SW 8270C or D	Pyrene	129-00-0	ug/kg	330	1,700,000	17,000,000	1,700,000	17,000,000	--	--	1,700,000	NO	46	125	46	125	30
SW 8270SIM	1-methylnaphthalene	90-12-0	ug/kg	5	16,000	53,000	22,000	99,000	--	--	16,000	NO	30	111	30	111	30
SW 8270SIM	2-methylnaphthalene	91-57-6	ug/kg	5	230,000	2,200,000	310,000	4,100,000	--	--	230,000	NO	30	111	30	111	30
SW 8270SIM	Acenaphthene	83-32-9	ug/kg	5	3,400,000	33,000,000	3,400,000	33,000,000	--	--	3,400,000	NO	28	110	28	110	30
SW 8270SIM	Acenaphthylene	208-96-8	ug/kg	5	--	--	--	--	--	--	--	NO	23	126	23	126	30
SW 8270SIM	Anthracene	120-12-7	ug/kg	5	17,000,000	170,000,000	17,000,000	170,000,000	--	--	17,000,000	NO	28	136	28	136	30
SW 8270SIM	Benzo (a) anthracene	56-55-3	ug/kg	5	150	2,100	150	2,100	--	--	150	NO	31	146	31	146	30
SW 8270SIM	Benzo (a) pyrene	50-32-8	ug/kg	5	15	210	15	210	38	130	15	NO	28	128	28	128	30
SW 8270SIM	Benzo (b) fluoranthene	205-99-2	ug/kg	5	150	2,100	150	2,100	--	--	150	NO	30	139	30	139	30
SW 8270SIM	Benzo (g,h,i) perylene	191-24-2	ug/kg	5	--	--	--	--	--	--	--	NO	21	149	21	149	30
SW 8270SIM	Benzo (k) fluoranthene	207-08-9	ug/kg	5	1,500	21,000	1,500	21,000	--	--	1,500	NO	42	129	42	129	30
SW 8270SIM	Chrysene	218-01-9	ug/kg	5	15,000	210,000	15,000	210,000	--	--	15,000	NO	39	134	39	134	30
SW 8270SIM	Dibenzo (a,h) anthracene	53-70-3	ug/kg	5	15	210	15	210	--	--	15	NO	30	138	30	138	30
SW 8270SIM	Fluoranthene	206-44-0	ug/kg	5	2,300,000	22,000,000	2,300,000	22,000,000	--	--	2,300,000	NO	30	142	30	142	30
SW 8270SIM	Fluorene	86-73-7	ug/kg	5	2,300,000	22,000,000	2,300,000	22,000,000	--	--	2,300,000	NO	27	116	27	116	30
SW 8270SIM	Indeno (1,2,3-c,d) pyrene	193-39-5	ug/kg	5	150	2,100	150	2,100	--	--	150	NO	17	164	17	164	30
SW 8270SIM	Naphthalene	91-20-3	ug/kg	5	3,600	18,000	3,900	20,000	--	--	3,600	NO	29	106	29	106	30
SW 8270SIM	Phenanthrene	85-01-8	ug/kg	5	--	--	--	--	--	--	--	NO	32	127	32	127	30
SW 8270SIM	Pyrene	129-00-0	ug/kg	5	1,700,000	17,000,000	1,700,000	17,000,000	--	--	1,700,000	NO	28	130	28	130	30

Notes:

Please keep in mind, Screening Levels are constantly revised by the EPA. The appropriate Screening levels are specific to the project, the location, the agency providing oversight, and the overall Goals of the project.

mg/kg = milligrams per kilogram
ug/kg = micrograms per kilogram
µmhos/cm = micromhos per centimeter

All soil results (with the exception of Waste characterization) must be reported as dry weight
SW 7199 soil analysis must be accompanied by a SW 3060A extraction
PCB - LCS, MS, and MSD only require Aroclor-1016 and Aroclor-1260 spikes

[1] For soil, most stringent of:
EPA Regional Screening Levels - 2008 and May 2012
CHHSL = California Human Health Screening Levels, January 2005
DTSC = California Department of Toxic Substance Control, January 2005

Table A-2

Reporting Limits, Accuracy, and Precession Limits for Groundwate

PG&E Program Quality Assurance Project Plan

Method	Constituent	CAS	Units	QAPP RL	EPA Regional Screening Levels May 2012	EPA Regional Screening Levels 2008	Federal Drinking Water Standards MCLs	California Drinking Water Standards MCLs	Most Stringent Screening Level[1]	Does RL Exceed Screening Level?	LCS Accuracy Control Limits (%R) Lower Limit	LCS Accuracy Control Limits (%R) Upper Limit	MS/MSD Accuracy Control Limits (%R) Lower Limit	MS/MSD Accuracy Control Limits (%R) Upper Limit	Precision Water % RPD
EPA 300.0M	Acetate	64-19-7	mg/L	0.1	--	--	--	--	--	NO	75	125	75	125	20
SM 2320 B	Alkalinity	Alkalinity	mg/L	5	--	--	--	--	--	NO	85	115	75	125	20
SM 4500-NH3 B, C, D, E, or G	Ammonia (as N)	7664-41-7	mg/L	0.5	--	--	--	--	--	NO	85	115	75	125	20
SM 2320 B	Bicarbonate	Bicarbonate	mg/L	5	--	--	--	--	--	NO	85	115	75	125	20
SM 5210 B	BOD	BOD	mg/L	--	--	--	--	--	--	NO	--	--	--	--	10
EPA 300.0	Bromide	Bromide	mg/L	0.5	--	--	--	--	--	NO	90	110	80	120	20
EPA 300.0M	Butyrate	107-92-6	mg/L	0.1	--	--	--	--	--	NO	75	125	75	125	20
SM 4500-CO_2	Carbon dioxide	124-38-9	mg/L	5	--	--	--	--	--	NO	--	--	--	--	20
SM 2320 B	Carbonate	Carbonate	mg/L	5	--	--	--	--	--	NO	85	115	75	125	20
EPA 300.0/SM 4500-Cl B, C, E, or D	Chloride	Chloride	mg/L	0.5	--	--	--	--	--	NO	90	110	80	120	20
SM 2120 E	Color	Color	Color unit	1	--	--	--	--	--	NO	90	110	90	110	20
SM 4500-CN	Cyanide	57-12-5	mg/L	0.01							85	115	75	125	20
EPA 300.0/SM 4500-F B, C, D, or E	Fluoride	Fluoride	mg/L	0.5	--	2.2	4	--	2.2	NO	90	110	80	120	20
SM 2340 B or C	Hardness	Hardness	mg/L	2	--	--	--	--	--	NO	75	125	75	125	20
SM 2320 B	Hydroxide alkalinity	Hydroxide	mg/L	5	--	--	--	--	--	NO	85	115	75	125	20
EPA 300.0M	Lactate	50-21-5	mg/L	0.1	--	--	--	--	--	NO	75	125	75	125	20
EPA 300.0	Nitrate (as N)	14797-55-8	mg/L	0.5	25	58	10	--	10	NO	90	110	80	120	20
EPA 353.2/SM 4500-NO_3 E, F or H	Nitrate/nitrite (as N)	NO3NO2N	mg/L	0.5	--	--	--	--	--	NO	85	115	75	125	20
EPA 300.0/SM 4500-NO2 B, F or E	Nitrite (as N)	14797-65-8	mg/L	0.5	--	3.7	1	--	1	NO	90	110	80	120	20
SM 5310 B, C, or D	Organic carbon	DOC/TOC	mg/L	0.3	--	--	--	--	--	NO	85	115	75	125	10
EPA 300.0/SM 4500-P E or F	Ortho phosphate	Ortho Phosphate	mg/L	0.02	--	--	--	--	--	NO	90	110	80	120	20
EPA 314.0	Perchlorate	Perchlorate	µg/L	4	--	26	--	--	26	NO	85	115	85	115	20
SM 4500-H+ B SW 9040	pH	pH	pH units	0.1	--	--	--	--	--	NO	--	--	--	--	20
EPA 300.0M	Propionate	79-09-4	mg/L	0.1	--	--	--	--	--	NO	75	125	75	125	20
EPA 300.0M	Pyruvate	127-17-3	mg/L	0.1	--	--	--	--	--	NO	75	125	75	125	20
SM 4500-SiO_2 E	Reactive silica	7631-86-9	mg/L	1	--	--	--	--	--	NO	75	125	75	125	20
SM 4500-SiO_2 C	Silica	7631-86-9	mg/L	0.04	--	--	--	--	--	NO	75	125	75	125	20
SILICA_CALC	Soluble silica	7631-86-9	mg/L	0.04	--	--	--	--	--	NO	75	125	75	125	20
EPA 120.1/SW 9050	Specific conductance	Conductance	µmhos/cm	2	--	--	--	--	--	NO	85	115	75	125	20
EPA 300.0/SM 4110 B	Sulfate	Sulfate	mg/L	0.5	--	--	--	--	--	NO	90	110	80	120	20
SM 4500-S^{-2} F, E, D, or G	Sulfide	Sulfide	mg/L	0.05	--	--	--	--	--	NO	75	125	75	125	20
SM 2540 C	Total dissolved solids	TDS	mg/L	10	--	--	--	--	--	NO	75	125	--	--	10
SM 4500-N_{org} B or C	Total kjeldahl nitrogen	7727-37-9	mg/L	--	--	--	--	--	--	NO	75	125	75	125	20
EPA 365.1/EPA 365.3 SM 4500-P E or F	Total phosphorous	Total Phosphorous	mg/L	0.02	--	--	--	--	--	NO	75	125	75	125	20
SM 2540 D	Total suspended solids	TSS	mg/L	4	--	--	--	--	--	NO	75	125	75	125	10
EPA 180.1/SM 2130 B	Turbidity	TURB	NTU	0.1	--	--	--	--	--	NO	--	--	--	--	20
SW 6020A/EPA 200.8	Aluminum	7429-90-5	ug/L	50	16,000	37,000	50*	1,000	50	NO	85	115	75	125	20
SW 6020A/EPA 200.8	Antimony	7440-36-0	ug/L	2	6	15	6	--	6	NO	85	115	75	125	20
SW 6020A/EPA 200.8	Arsenic	7440-38-2	ug/L	0.5 (0.1)	0.045	0.045	10	--	0.045	YES	85	115	75	125	20
SW 6020A/EPA 200.8	Barium	7440-39-3	ug/L	2	2,900	7,300	2,000	1,000	1,000	NO	85	115	75	125	20
SW 6020A/EPA 200.8	Beryllium	7440-41-7	ug/L	0.5	16	73	4	--	4	NO	85	115	75	125	20
SW 6010B or C/SW 6020A/EPA 200.7/EPA 200.8	Boron	7440-42-8	ug/L	50	?	?	?	?	?	?	85	115	75	125	20
SW 6020A/EPA 200.8	Cadmium	7440-43-9	ug/L	1	--	18	5	--	5	NO	85	115	75	125	20
SW 6010B/EPA 200.7	Calcium	7440-70-2	ug/L	100	--	--	--	--	--	NO	85	115	75	125	20
SW 6020A/EPA 200.8	Chromium	7440-47-3	ug/L	1	--	--	100	50	50	NO	85	115	75	125	20
EPA 218.6	Chromium, Hexavalent	18540-29-9	ug/L	0.2	0.031	110	100	--	0.031	YES	90	110	90	110	20
EPA 218.6 LL	Chromium, Hexavalent, LL	18540-29-9	ug/L	0.06	0.031	110	100	--	0.031	YES	90	110	90	110	20
SM 3500-Cr	Chromium, Hexavalent	18540-29-9	ug/L	10	0.031	110	100	--	0.031	YES	85	115	80	120	20
SW 6010B or C/SW 6020A/EPA 200.7/EPA 200.8	Cobalt	7440-48-4	ug/L	5	4.7	11	--	--	4.7	YES	85	115	75	125	20
SW 6010B or C/SW 6020A/EPA 200.7/EPA 200.8	Copper	7440-50-8	ug/L	1	620	1,500	1,000*	--	620	NO	85	115	75	125	20
SW 6010B or C/EPA 200.7	Iron	7439-89-6	ug/L	20	11,000	26,000	300*	--	300	NO	85	115	75	125	20
SW 6010B or C/SW 6020A/EPA 200.7/EPA 200.8	Lead	7439-92-1	ug/L	1	--	--	15	--	15	NO	85	115	75	125	20
SW 6010B or C/EPA 200.7	Magnesium	7439-95-4	ug/L	100	--	--	--	--	--	NO	85	115	75	125	20
SW 6020A/EPA 200.8	Manganese	7439-96-5	ug/L	0.5	--	880	50*	--	50	NO	85	115	75	125	20
SW 7070A/EPA 245.1/ EPA 6020A?	Mercury	7439-97-6	ug/L	0.2	0.63	0.63	2	--	0.63	NO	75	125	75	125	20
SW 6020A/EPA 200.8	Molybdenum	7439-98-7	ug/L	2	78	180	--	--	78	NO	85	115	75	125	20
SW 6020A/EPA 200.8	Nickel	7440-02-0	ug/L	2	300	730	100*	100	100	NO	85	115	75	125	20
SW 6010B or C/EPA 200.7	Potassium	7440-09-7	ug/L	100	--	--	--	--	--	NO	85	115	75	125	20
SW 6020A/EPA 200.8	Selenium	7782-49-2	ug/L	10	78	180	50	--	50	NO	85	115	75	125	20
SW 6020A/EPA 200.8	Silver	7440-22-4	ug/L	5	71	180	--	--	71	NO	85	115	75	125	20
SW 6010B or C/EPA 200.7	Sodium	7440-23-5	ug/L	100	--	--	--	--	--	NO	85	115	75	125	20
EPA 200.7/EPA 200.8	Strontium	7440-24-6	ug/L	50	9,300	22,000	--	--	9,300	NO	85	115	75	125	20
SW 6020A/EPA 200.8	Thallium	7440-28-0	ug/L	1	0.16	2.4	2	--	0.16	YES	85	115	75	125	20
SW 6020A/EPA 200.8	Uranium	7440-61-1	ug/L	5	230	--	30	--	30	NO	85	115	75	125	20
SW 6020A/EPA 200.8	Vanadium	7440-62-2	ug/L	5	--	2.6	--	--	2.6	YES	85	115	75	125	20

Table A-2
Reporting Limits, Accuracy, and Precession Limits for Groundwate
PG&E Program Quality Assurance Project Plan

Method	Constituent	CAS	Units	QAPP RL	EPA Regional Screening Levels May 2012	EPA Regional Screening Levels 2008	Federal Drinking Water Standards MCLs	California Drinking Water Standards MCLs	Most Stringent Screening Level[1]	Does RL Exceed Screening Level?	LCS Accuracy Control Limits (%R) Lower Limit	LCS Accuracy Control Limits (%R) Upper Limit	MS/MSD Accuracy Control Limits (%R) Lower Limit	MS/MSD Accuracy Control Limits (%R) Upper Limit	Precision Water % RPD
SW 6010B or C/SW 6020A/EPA 200.7/EPA 200.8	Zinc	7440-66-6	ug/L	20	4,700	11,000	5,000*	--	4,700	NO	85	115	75	125	20
SW 8015B or C or D	Motor Oil	TPH-motor oil	mg/L	1	--	--	--	--	--	NO	50	150	50	150	30
SW 8015B or C or D	TPH-Diesel	TPH-diesel	mg/L	0.5	--	--	--	--	--	NO	61	143	61	143	30
SW 8015B or C or D	TPH-Gasoline	TPH-gasoline	mg/L	0.1	--	--	--	--	--	NO	67	136	67	136	30
SW 8081A or B	4,4'-DDD	72-54-8	ug/L	0.1	0.28	0.28	--	--	0.28	NO	50	139	50	139	30
SW 8081A or B	4,4'-DDE	72-55-9	ug/L	0.1	0.2	0.2	--	--	0.2	NO	48	137	48	137	30
SW 8081A or B	4,4'-DDT	50-29-3	ug/L	0.1	0.2	0.2	--	--	0.2	NO	47	138	47	138	30
SW 8081A or B	Aldrin	309-00-2	ug/L	0.1	0.00021	0.004	--	--	0.00021	YES	42	138	42	138	30
SW 8081A or B	alpha-HCH	319-84-6	ug/L	0.1	0.0062	0.011	--	--	0.0062	YES	60	128	60	128	30
SW 8081A or B	alpha-Chlordane	5103-71-9	ug/L	0.1	--	--	2	--	2	NO	63	123	63	123	30
SW 8081A or B	beta-HCH	319-85-7	ug/L	0.1	0.022	0.037	--	--	0.022	YES	66	126	66	126	30
SW 8081A or B	delta-HCH	319-86-8	ug/L	0.1	--	--	--	--	--	NO	46	136	46	136	30
SW 8081A or B	Dieldrin	60-57-1	ug/L	0.1	0.0015	0.0042	--	--	0.0015	YES	62	129	62	129	30
SW 8081A or B	Endosulfan I	959-98-8	ug/L	0.1	--	--	--	--	--	NO	49	120	49	120	30
SW 8081A or B	Endosulfan II	33213-65-9	ug/L	0.1	--	--	--	--	--	NO	42	130	42	130	30
SW 8081A or B	Endosulfan sulfate	1031-07-8	ug/L	0.1	--	--	--	--	--	NO	54	137	54	137	30
SW 8081A or B	Endrin	72-20-8	ug/L	0.1	1.7	11	2	--	1.7	NO	56	134	56	134	30
SW 8081A or B	Endrin aldehyde	7421-93-4	ug/L	0.1	--	--	--	--	--	NO	56	137	56	137	30
SW 8081A or B	gamma-HCH (lindane)	58-89-9	ug/L	0.1	0.036	0.061	0.2	--	0.036	YES	30	146	30	146	30
SW 8081A or B	gamma-Chlordane	5103-74-2	ug/L	0.1	--	--	2	--	2	NO	67	120	67	120	30
SW 8081A or B	Heptachlor	76-44-8	ug/L	0.1	0.0018	0.015	0.4	--	0.0018	YES	51	128	51	128	30
SW 8081A or B	Heptachlor Epoxide	1024-57-3	ug/L	0.1	0.0033	0.0074	0.2	--	0.0033	YES	62	131	62	131	30
SW 8081A or B	Methoxychlor	72-43-5	ug/L	0.5	27	180	40	--	27	NO	56	150	56	150	30
SW 8081A or B	Toxaphene	8001-35-2	ug/L	1	0.013	0.061	3	--	0.013	YES	41	126	41	126	30
SW 8082 or A	Aroclor-1016	12674-11-2	ug/L	0.5	0.96	0.96	0.5	--	0.5	NO	40	144	40	144	30
SW 8082 or A	Aroclor-1221	11104-28-2	ug/L	0.5	0.0043	0.0068	0.5	--	0.0043	YES	41	136	41	136	30
SW 8082 or A	Aroclor-1232	11141-16-5	ug/L	0.5	0.0043	0.0068	0.5	--	0.0043	YES	41	136	41	136	30
SW 8082 or A	Aroclor-1242	53469-21-9	ug/L	0.5	0.034	0.034	0.5	--	0.034	YES	39	150	39	150	30
SW 8082 or A	Aroclor-1248	12672-29-6	ug/L	0.5	0.034	0.034	0.5	--	0.034	YES	41	136	41	136	30
SW 8082 or A	Aroclor-1254	11097-69-1	ug/L	0.5	0.034	0.034	0.5	--	0.034	YES	29	141	29	141	30
SW 8082 or A	Aroclor-1260	11096-82-5	ug/L	0.5	0.034	0.034	0.5	--	0.034	YES	45	145	45	145	30
SW 8151A	2,4-D	94-75-7	ug/L	10	130	370	70	--	70	NO	39	120	39	120	30
SW 8151A	2,4-DB	94-82-6	ug/L	20	91	290	--	--	91	NO	44	120	44	120	30
SW 8151A	2,4,5-T	93-76-5	ug/L	20	120	370	--	--	120	NO	44	122	44	122	30
SW 8151A	2,4,5-TP	93-72-1	ug/L	10	84	290	--	--	84	NO	49	126	49	126	30
SW 8151A	Dalapon	75-99-0	ug/L	30	470	1,100	200	--	200	NO	40	120	40	120	30
SW 8151A	Dicamba	1918-00-9	ug/L	30	440	1,100	--	--	440	NO	60	120	60	120	30
SW 8151A	Dichloroprop	120-36-5	ug/L	20	--	--	--	--	--	NO	68	122	68	122	30
SW 8151A	Dinoseb	88-85-7	ug/L	3	11	37	7	--	7	NO	28	115	28	115	30
SW 8151A	MCPA	94-74-6	ug/L	100	5.7	18	--	--	5.7	YES	62	144	62	144	30
SW 8151A	MCPP	7085-19-0	ug/L	100	--	37	--	--	37	YES	60	133	60	133	30
SW 8260B or C	1,1,1,2-Tetrachloroethane	630-20-6	ug/L	0.5	0.5	0.52	--	--	0.5	NO	81	129	81	129	20
SW 8260B or C	1,1,1-Trichloroethane (TCA)	71-55-6	ug/L	1	7,500	9,100	200	200	200	NO	67	132	67	132	20
SW 8260B or C	1,1,2,2-Tetrachloroethane	79-34-5	ug/L	0.5	0.066	0.067	--	1	0.066	YES	63	128	63	128	20
SW 8260B or C	1,1,2-Trichloroethane	79-00-5	ug/L	1	0.24	0.24	5	5	0.24	YES	75	125	75	125	20
SW 8260B or C	1,1,2-Trichlorotrifluoroethane (Freon 113)	76-13-1	ug/L	1	53,000	59,000	--	1,200	1,200	NO	75	125	75	125	20
SW 8260B or C	1,1-Dichloroethane	75-34-3	ug/L	1	2.4	2.4	--	5	2.4	NO	69	133	69	133	20
SW 8260B or C	1,1-Dichloroethene	75-35-4	ug/L	1	260	340	7	6	6	NO	68	130	68	130	20
SW 8260B or C	1,1-Dichloropropene	563-58-6	ug/L	1	--	--	--	--	--	NO	73	132	73	132	20
SW 8260B or C	1,2,3-Trichlorobenzene	87-61-6	ug/L	1	5.2	--	--	--	5.2	NO	67	137	67	137	20
SW 8260B or C	1,2,3-Trichloropropane	96-18-4	ug/L	1	0.00065	0.0096	--	--	0.00065	YES	73	124	73	124	20
SW 8260B or C	1,2,4-Trichlorobenzene	120-82-1	ug/L	1	0.99	8.2	70	5	0.99	YES	66	134	66	134	20
SW 8260B or C	1,2,4-Trimethylbenzene	95-63-6	ug/L	1	15	15	--	--	15	NO	74	132	74	132	20
SW 8260B or C	1,2-Dibromo-3-Chloropropane	96-12-8	ug/L	2	0.00032	0.00032	0.2	--	0.00032	YES	50	132	50	132	20
SW 8260B or C	1,2-Dibromoethane (EDB)	106-93-4	ug/L	1	0.0065	0.0065	0.05	--	0.0065	YES	80	121	80	121	20
SW 8260B or C	1,2-Dichlorobenzene	95-50-1	ug/L	1	280	370	600	600	280	NO	71	122	71	122	20
SW 8260B or C	1,2-Dichloroethane (EDC)	107-06-2	ug/L	0.5	0.15	0.15	5	0.5	0.15	YES	69	132	69	132	20
SW 8260B or C	1,2-Dichloropropane	78-87-5	ug/L	1	0.38	0.39	5	5	0.38	YES	75	125	75	125	20
SW 8260B or C	1,3,5-Trimethylbenzene	108-67-8	ug/L	1	87	12	--	--	12	NO	74	131	74	131	20
SW 8260B or C	1,3-Dichlorobenzene	541-73-1	ug/L	1	--	--	--	--	--	NO	75	124	75	124	20
SW 8260B or C	1,3-Dichloropropane	142-28-9	ug/L	1	290	730	--	--	290	NO	73	126	73	126	20
SW 8260B or C	1,4-Dichlorobenzene	106-46-7	ug/L	0.5	0.42	0.43	75	5	0.42	YES	74	123	74	123	20
SW 8260B or C	2,2-Dichloropropane	594-20-7	ug/L	1	--	--	--	--	--	NO	69	137	69	137	20
SW 8260B or C	2-Butanone (MEK)	78-93-3	ug/L	10	4,900	7,100	--	--	4,900	NO	49	136	49	136	20
SW 8260B or C	2-Chlorotoluene	95-49-8	ug/L	1	180	730	--	--	180	NO	73	126	73	126	20
SW 8260B or C	4-Chlorotoluene	106-43-4	ug/L	1	190	2,600	--	--	190	NO	74	128	74	128	20

Table A-2
Reporting Limits, Accuracy, and Precession Limits for Groundwate
PG&E Program Quality Assurance Project Plan

Method	Constituent	CAS	Units	QAPP RL	EPA Regional Screening Levels May 2012	EPA Regional Screening Levels 2008	Federal Drinking Water Standards MCLs	California Drinking Water Standards MCLs	Most Stringent Screening Level[1]	Does RL Exceed Screening Level?	LCS Accuracy Control Limits (%R) Lower Limit	LCS Accuracy Control Limits (%R) Upper Limit	MS/MSD Accuracy Control Limits (%R) Lower Limit	MS/MSD Accuracy Control Limits (%R) Upper Limit	Precision Water % RPD
SW 8260B or C	4-Isopropyltoluene	99-87-6	ug/L	1	--	--	--	--	--	NO	73	130	73	130	20
SW 8260B or C	4-Methyl-2-Pentanone	108-10-1	ug/L	10	1,000	2,000	--	--	1,000	NO	58	134	58	134	20
SW 8260B or C	Acetone	67-64-1	ug/L	10	12,000	22,000	--	--	12,000	NO	40	135	40	135	20
SW 8260B or C	Acrolein	107-02-8	ug/L	20	0.041	0.042	--	--	0.041	YES	75	125	75	125	20
SW 8260B or C	Acrylonitrile	107-13-1	ug/L	20	0.045	0.045	--	--	0.045	YES	75	125	75	125	20
SW 8260B or C	Benzene	71-43-2	ug/L	0.4	0.39	0.41	5	1	0.39	YES	81	122	81	122	20
SW 8260B or C	Bromobenzene	108-86-1	ug/L	1	54	20	--	--	20	NO	76	124	76	124	20
SW 8260B or C	Bromochloromethane	74-97-5	ug/L	1	83	--	--	--	83	NO	65	129	65	129	20
SW 8260B or C	Bromodichloromethane	75-27-4	ug/L	0.5	0.12	1.1	100	--	0.12	YES	76	121	76	121	20
SW 8260B or C	Bromoform	75-25-2	ug/L	1	7.9	8.5	100	--	7.9	NO	69	128	69	128	20
SW 8260B or C	Bromomethane	74-83-9	ug/L	3	7	8.7	--	--	7	NO	53	141	53	141	20
SW 8260B or C	Carbon Disulfide	75-15-0	ug/L	1	720	1,000	--	--	720	NO	75	125	75	125	20
SW 8260B or C	Carbon Tetrachloride	56-23-5	ug/L	1	0.39	0.2	5	0.5	0.2	YES	66	138	66	138	20
SW 8260B or C	Chlorobenzene	108-90-7	ug/L	0.5	72	91	100	--	72	NO	81	122	81	122	20
SW 8260B or C	Chloroethane	75-00-3	ug/L	1	21,000	21,000	--	--	21,000	NO	58	133	58	133	20
SW 8260B or C	Chloroform	67-66-3	ug/L	1	0.19	0.19	100	--	0.19	YES	69	128	69	128	20
SW 8260B or C	Chloromethane	74-87-3	ug/L	1	190	1.8	--	--	1.8	NO	56	131	56	131	20
SW 8260B or C	cis-1,2-Dichloroethene	156-59-2	ug/L	1	28	370	70	6	6	NO	72	126	72	126	20
SW 8260B or C	cis-1,3-Dichloropropene	10061-01-5	ug/L	0.5	--	--	--	--	--	NO	69	131	69	131	20
SW 8260B or C	Dibromochloromethane	124-48-1	ug/L	0.5	0.15	0.8	100	--	0.15	YES	66	133	66	133	20
SW 8260B or C	Dibromomethane	74-95-3	ug/L	1	7.9	370	--	--	7.9	NO	76	125	76	125	20
SW 8260B or C	Dichlorodifluoromethane (Freon 12)	75-71-8	ug/L	1	190	390	--	--	190	NO	53	153	53	153	20
SW 8260B or C	Ethylbenzene	100-41-4	ug/L	1	1.3	1.5	700	--	1.3	NO	73	127	73	127	20
SW 8260B or C	Hexachlorobutadiene	87-68-3	ug/L	0.6	0.26	0.86	--	--	0.26	YES	67	131	67	131	20
SW 8260B or C	Isopropylbenzene (Cumene)	98-82-8	ug/L	1	390	680	--	--	390	NO	75	127	75	127	20
SW 8260B or C	Methylene chloride	75-09-2	ug/L	1	9.9	4.8	5	5	4.8	NO	63	137	63	137	20
SW 8260B or C	Naphthalene	91-20-3	ug/L	1	0.14	0.14	--	--	0.14	YES	54	138	54	138	20
SW 8260B or C	n-Butylbenzene	104-51-8	ug/L	1	780	--	--	--	780	NO	69	137	69	137	20
SW 8260B or C	n-Propylbenzene	103-65-1	ug/L	1	530	--	--	--	530	NO	72	129	72	129	20
SW 8260B or C	sec-Butylbenzene	135-98-8	ug/L	1	--	--	--	--	--	NO	72	127	72	127	20
SW 8260B or C	Styrene	100-42-5	ug/L	1	1,100	1,600	100	100	100	NO	65	134	65	134	20
SW 8260B or C	tert-Butyl Methyl Ether (MTBE)	1634-04-4	ug/L	5	12	12	--	13	12	NO	65	123	65	123	20
SW 8260B or C	tert-Butylbenzene	98-06-6	ug/L	1	--	--	--	--	--	NO	70	129	70	129	20
SW 8260B or C	Tetrachloroethene	127-18-4	ug/L	1	9.7	0.11	5	5	0.11	YES	66	128	66	128	20
SW 8260B or C	Toluene	108-88-3	ug/L	1	860	2,300	1,000	150	150	NO	77	122	77	122	20
SW 8260B or C	trans-1,2-Dichloroethene	156-60-5	ug/L	1	86	110	100	10	10	NO	63	137	63	137	20
SW 8260B or C	trans-1,3-Dichloropropene	10061-02-6	ug/L	1	--	--	--	--	--	NO	59	135	59	135	20
SW 8260B or C	Trichloroethene	79-01-6	ug/L	1	0.44	1.7	5	5	0.44	YES	70	127	70	127	20
SW 8260B or C	Trichlorofluoromethane (Freon 11)	75-69-4	ug/L	1	1,100	1,300	--	150	150	NO	57	129	57	129	20
SW 8260B or C	Vinyl Chloride	75-01-4	ug/L	1	0.015	0.016	2	0.5	0.015	YES	50	134	50	134	20
SW 8260B or C	Xylenes, Total	1330-20-7	ug/L	2	190	200	10,000	1,750	190	NO	75	125	75	125	20
SW 8260B or C	m -Xylene	108-38-3	ug/L	2	190	1,400	--	--	190	NO	76	128	76	128	20
SW 8260B or C	o-Xylene	95-47-6	ug/L	1	190	1,400	--	--	190	NO	80	121	80	121	20
SW 8260B or C	p-Xylene	106-42-3	ug/L	1	190	1,500	--	--	190	NO	76	128	76	128	20
SW 8270C or D	1,2,4-Trichlorobenzene	120-82-1	ug/L	10	0.99	8.2	70	--	0.99	YES	37	120	37	120	20
SW 8270C or D	1,2-Dichlorobenzene	95-50-1	ug/L	10	280	370	600	--	280	NO	33	120	33	120	20
SW 8270C or D	1,3-Dichlorobenzene	541-73-1	ug/L	10	--	--	--	--	--	NO	32	120	32	120	20
SW 8270C or D	1,4-Dichlorobenzene	106-46-7	ug/L	10	0.42	0.43	75	--	0.42	YES	32	120	32	120	20
SW 8270C or D	2,4,5-Trichlorophenol	95-95-4	ug/L	50	890	3,700	--	--	890	NO	49	120	49	120	20
SW 8270C or D	2,4,6-Trichlorophenol	88-06-2	ug/L	10	3.5	6.1	--	--	3.5	YES	49	126	49	126	20
SW 8270C or D	2,4-Dichlorophenol	120-83-2	ug/L	10	35	110	--	--	35	NO	48	120	48	120	20
SW 8270C or D	2,4-Dimethylphenol	105-67-9	ug/L	10	270	730	--	--	270	NO	28	120	28	120	20
SW 8270C or D	2,4-Dinitrophenol	51-28-5	ug/L	10	30	73	--	--	30	NO	25	130	25	130	20
SW 8270C or D	2,4-Dinitrotoluene	121-14-2	ug/L	10	0.2	73	--	--	0.2	YES	51	120	51	120	20
SW 8270C or D	2,6-Dinitrotoluene	606-20-2	ug/L	10	15	37	--	--	15	NO	49	120	49	120	20
SW 8270C or D	2-Chloronaphthalene	91-58-7	ug/L	10	550	2,900	--	--	550	NO	49	120	49	120	20
SW 8270C or D	2-Chlorophenol	95-57-8	ug/L	10	71	180	--	--	71	NO	37	120	37	120	20
SW 8270C or D	2-Methylnaphthalene	91-57-6	ug/L	10	27	150	--	--	27	NO	46	120	46	120	20
SW 8270C or D	2-Methylphenol (o-Cresol)	95-48-7	ug/L	10	720	1,800	--	--	720	NO	38	120	38	120	20
SW 8270C or D	2-Nitroaniline	88-74-4	ug/L	50	150	--	--	--	150	NO	48	120	48	120	20
SW 8270C or D	2-Nitrophenol	88-75-5	ug/L	10	--	--	--	--	--	NO	39	123	39	123	20
SW 8270C or D	3,3'-Dichlorobenzidine	91-94-1	ug/L	20	0.11	0.15	--	--	0.11	YES	20	120	20	120	20
SW 8270C or D	3-Nitroaniline	99-09-2	ug/L	50	--	3.2	--	--	3.2	YES	20	126	20	126	20
SW 8270C or D	4,6-Dinitro-2-methylphenol	534-52-1	ug/L	50	1.2	3.7	--	--	1.2	YES	40	130	40	130	20
SW 8270C or D	4-Bromophenyl Phenyl Ether	101-55-3	ug/L	10	--	--	--	--	--	NO	52	120	52	120	20
SW 8270C or D	4-Chloro-3-methylphenol	59-50-7	ug/L	20	1,100	--	--	--	1,100	NO	47	120	47	120	20

Table A-2
Reporting Limits, Accuracy, and Precession Limits for Groundwate
PG&E Program Quality Assurance Project Plan

Method	Constituent	CAS	Units	QAPP RL	EPA Regional Screening Levels May 2012	EPA Regional Screening Levels 2008	Federal Drinking Water Standards MCLs	California Drinking Water Standards MCLs	Most Stringent Screening Level[1]	Does RL Exceed Screening Level?	LCS Accuracy Control Limits (%R) Lower Limit	LCS Accuracy Control Limits (%R) Upper Limit	MS/MSD Accuracy Control Limits (%R) Lower Limit	MS/MSD Accuracy Control Limits (%R) Upper Limit	Precision Water % RPD
SW 8270C or D	4-Chloroaniline	106-47-8	ug/L	20	0.32	1.2	--	--	0.32	YES	20	120	20	120	20
SW 8270C or D	4-Chlorophenyl phenyl ether	7005-72-3	ug/L	10	--	--	--	--	--	NO	50	120	50	120	20
SW 8270C or D	4-Methylphenol (p-Cresol)	106-44-5	ug/L	50	1,400	180	--	--	180	NO	32	120	32	120	20
SW 8270C or D	4-Nitroaniline	100-01-6	ug/L	50	3.3	3.2	--	--	3.2	YES	36	120	36	120	20
SW 8270C or D	4-Nitrophenol	100-02-7	ug/L	50	--	--	--	--	--	NO	20	120	20	120	20
SW 8270C or D	Acenaphthene	83-32-9	ug/L	10	400	2,200	--	--	400	NO	47	120	47	120	20
SW 8270C or D	Acenaphthylene	208-96-8	ug/L	10	--	--	--	--	--	NO	50	120	50	120	20
SW 8270C or D	Anthracene	120-12-7	ug/L	10	1,300	11,000	--	--	1,300	NO	54	120	54	120	20
SW 8270C or D	Benzo (a) anthracene	56-55-3	ug/L	10	0.029	0.029	--	--	0.029	YES	56	100	56	100	20
SW 8270C or D	Benzo (a) pyrene	50-32-8	ug/L	10	0.0029	0.0029	0.2	--	0.0029	YES	53	120	53	120	20
SW 8270C or D	Benzo (b) fluoranthene	205-99-2	ug/L	10	0.029	0.029	--	--	0.029	YES	45	124	45	124	20
SW 8270C or D	Benzo (g,h,i) perylene	191-24-2	ug/L	10	--	--	--	--	--	NO	38	123	38	123	20
SW 8270C or D	Benzo (k) fluoranthene	207-08-9	ug/L	10	0.29	0.29	--	--	0.29	YES	45	124	45	124	20
SW 8270C or D	Benzoic acid	65-85-0	ug/L	100	58,000	150,000	--	--	58,000	NO	20	120	20	120	20
SW 8270C or D	Benzyl alcohol	100-51-6	ug/L	20	1,500	18,000	--	--	1,500	NO	30	120	30	120	20
SW 8270C or D	bis (2-chloroethoxy) methane	111-91-1	ug/L	10	47	110	--	--	47	NO	46	120	46	120	20
SW 8270C or D	bis (2-chloroethyl) ether	111-44-4	ug/L	10	0.012	0.012	--	--	0.012	YES	37	120	37	120	20
SW 8270C or D	bis (2-chloroisopropyl) ether	108-60-1	ug/L	10	0.31	0.32	--	--	0.31	YES	26	131	26	131	20
SW 8270C or D	bis (2-ethylhexyl) phthalate	117-81-7	ug/L	10	0.071	4.8	6	--	0.071	YES	42	126	42	126	20
SW 8270C or D	Butyl benzylphthalate	85-68-7	ug/L	10	14	35	--	--	14	NO	46	120	46	120	20
SW 8270C or D	Chrysene	218-01-9	ug/L	10	2.9	2.9	--	--	2.9	YES	55	120	55	120	20
SW 8270C or D	Dibenzo (a,h) anthracene	53-70-3	ug/L	10	0.0029	0.0029	--	--	0.0029	YES	42	127	42	127	20
SW 8270C or D	Dibenzofuran	132-64-9	ug/L	10	5.8	--	--	--	5.8	YES	54	120	54	120	20
SW 8270C or D	Diethyl phthalate	84-66-2	ug/L	10	11,000	29,000	--	--	11,000	NO	41	120	41	120	20
SW 8270C or D	Dimethyl phthalate	131-11-3	ug/L	10	--	--	--	--	--	NO	25	127	25	127	20
SW 8270C or D	Di-n-butylphthalate	84-74-2	ug/L	10	670	3,700	--	--	670	NO	54	120	54	120	20
SW 8270C or D	Di-n-octylphthalate	117-84-0	ug/L	10	--	--	--	--	--	NO	37	137	37	137	20
SW 8270C or D	Fluoranthene	206-44-0	ug/L	10	630	1,500	--	--	630	NO	54	120	54	120	20
SW 8270C or D	Fluorene	86-73-7	ug/L	10	220	1,500	--	--	220	NO	50	120	50	120	20
SW 8270C or D	Hexachlorobenzene	118-74-1	ug/L	10	0.042	0.042	1	--	0.042	YES	52	120	52	120	20
SW 8270C or D	Hexachlorobutadiene	87-68-3	ug/L	10	0.26	0.86	--	--	0.26	YES	27	120	27	120	20
SW 8270C or D	Hexachloroethane	67-72-1	ug/L	10	0.79	4.8	--	--	0.79	YES	28	120	28	120	20
SW 8270C or D	Indeno (1,2,3-c,d) pyrene	193-39-5	ug/L	10	0.029	0.029	--	--	0.029	YES	43	125	43	125	20
SW 8270C or D	Isophorone	78-59-1	ug/L	10	67	71	--	--	67	NO	50	120	50	120	20
SW 8270C or D	Naphthalene	91-20-3	ug/L	10	0.14	0.14	--	--	0.14	YES	39	120	39	120	20
SW 8270C or D	Nitrobenzene	98-95-3	ug/L	10	0.12	3.4	--	--	0.12	YES	44	120	44	120	20
SW 8270C or D	n-Nitrosodi-n-propylamine	621-64-7	ug/L	10	0.0093	0.0096	--	--	0.0093	YES	34	128	34	128	20
SW 8270C or D	n-Nitrosodiphenylamine	86-30-6	ug/L	10	10	14	--	--	10	NO	48	120	48	120	20
SW 8270C or D	Pentachlorophenol	87-86-5	ug/L	50	0.17	0.56	1	--	0.17	YES	38	120	38	120	20
SW 8270C or D	Phenanthrene	85-01-8	ug/L	10	--	--	--	--	--	NO	51	120	51	120	20
SW 8270C or D	Phenol	108-95-2	ug/L	10	4,500	11,000	--	--	4,500	NO	20	120	20	120	20
SW 8270C or D	Pyrene	129-00-0	ug/L	10	87	1,100	--	--	87	NO	49	128	49	128	20
SW 8270SIM	1-methylnaphthalene	90-12-0	ug/L	0.2	0.97	2.3	--	--	0.97	NO	35	131	35	131	30
SW 8270SIM	2-methylnaphthalene	91-57-6	ug/L	0.2	27	150	--	--	27	NO	36	121	36	121	30
SW 8270SIM	Acenaphthene	83-32-9	ug/L	0.2	400	2,200	--	--	400	NO	39	125	39	125	30
SW 8270SIM	Acenaphthylene	208-96-8	ug/L	0.2	--	--	--	--	--	NO	43	140	43	140	30
SW 8270SIM	Anthracene	120-12-7	ug/L	0.2	1,300	11,000	--	--	1,300	NO	41	132	41	132	30
SW 8270SIM	Benzo (a) anthracene	56-55-3	ug/L	0.2	0.029	0.029	--	--	0.029	YES	58	141	58	141	30
SW 8270SIM	Benzo (a) pyrene	50-32-8	ug/L	0.2	0.0029	0.0029	0.2	--	0.0029	YES	31	142	31	142	30
SW 8270SIM	Benzo (b) fluoranthene	205-99-2	ug/L	0.2	0.029	0.029	--	--	0.029	YES	42	156	42	156	30
SW 8270SIM	Benzo (g,h,i) perylene	191-24-2	ug/L	0.2	--	--	--	--	--	NO	12	171	12	171	30
SW 8270SIM	Benzo (k) fluoranthene	207-08-9	ug/L	0.2	0.29	0.29	--	--	0.29	NO	49	165	49	165	30
SW 8270SIM	Chrysene	218-01-9	ug/L	0.2	2.9	2.9	--	--	2.9	NO	51	155	51	155	30
SW 8270SIM	Dibenzo (a,h) anthracene	53-70-3	ug/L	0.2	0.0029	0.0029	--	--	0.0029	YES	28	153	28	153	30
SW 8270SIM	Fluoranthene	206-44-0	ug/L	0.2	630	1,500	--	--	630	NO	47	158	47	158	30
SW 8270SIM	Fluorene	86-73-7	ug/L	0.2	220	1,500	--	--	220	NO	40	140	40	140	30
SW 8270SIM	Indeno (1,2,3-c,d) pyrene	193-39-5	ug/L	0.2	0.029	0.029	--	--	0.029	YES	20	167	20	167	30
SW 8270SIM	Naphthalene	91-20-3	ug/L	0.2	0.14	0.14	--	--	0.14	YES	39	125	39	125	30
SW 8270SIM	Phenanthrene	85-01-8	ug/L	0.2	--	--	--	--	--	NO	46	144	46	144	30
SW 8270SIM	Pyrene	129-00-0	ug/L	0.2	87	1,100	--	--	87	NO	39	158	39	158	30
CF-IRMS	D18O	D18O	0/00	--	--	--	--	--	--	NO	--	--	--	--	20
CF-IRMS	DD	DD	0/00	--	--	--	--	--	--	NO	--	--	--	--	20
SM 7110 C	Gross alpha	Gross alpha	pCi/L	3	--	--	15	15	15	NO	--	--	--	--	20
EPA 900.0	Gross beta	Gross beta	pCi/L	4	--	--	--	4	4	NO	--	--	--	--	20
EPA 903.1	Radium-226	013982-63-3	pCi/L	1	--	--	5	--	5	NO	--	--	--	--	20
EPA 904.0	Radium-228	015262-20-1	pCi/L	1	--	--	5	--	5	NO	--	--	--	--	20

Table A-2
Reporting Limits, Accuracy, and Precession Limits for Groundwate
PG&E Program Quality Assurance Project Plan

Method	Constituent	CAS	Units	QAPP RL	EPA Regional Screening Levels May 2012	EPA Regional Screening Levels 2008	Federal Drinking Water Standards MCLs	California Drinking Water Standards MCLs	Most Stringent Screening Level[1]	Does RL Exceed Screening Level?	LCS Accuracy Control Limits (%R) Lower Limit	LCS Accuracy Control Limits (%R) Upper Limit	MS/MSD Accuracy Control Limits (%R) Lower Limit	MS/MSD Accuracy Control Limits (%R) Upper Limit	Precision Water % RPD
EPA 905.0	Strontium	7440-26-4	pCi/L	2	--	--	--	8	8	NO	--	--	--	--	20
EPA 906.0	Tritium	10028-17-8	pCi/L	1,000	--	--	--	20,000	20,000	NO	--	--	--	--	20
EPA 908.0	Uranium	7440-61-1	pCi/L	1	--	--	--	20	20	NO	--	--	--	--	20
RSK-175	Carbon Dioxide	124-38-9	ug/L	5	--	--	--	--	--	NO	80	120	80	120	20
RSK-175	Ethane	74-84-0	ug/L	5	--	--	--	--	--	NO	80	120	80	120	20
RSK-175	Ethene	74-85-1	ug/L	5	--	--	--	--	--	NO	80	120	80	120	20
RSK-175	Methane	74-82-8	ug/L	5	--	--	--	--	--	NO	80	120	80	120	20

Notes:

Please keep in mind, Screening Levels are constantly revised by the EPA. The appropriate Screening levels are specific to the project, the location, the agency providing oversight, and the overall Goals of the project.

mg/L = milligrams per liter
ug/L = micrograms per liter
µmhos/cm = micromhos per centimeter
pCi/L = picocuries per liter
PCB - LCS, MS, and MSD only require Aroclor-1016 and Aroclor-1260 spikes

[1] For groundwater, most stringent of:
EPA Regional Screening Levels - 2008 and May 2012
Federal Drinking Water Standards, MCLs
*Secondary Federal Drinking Water Standards, MCLs
California Drinking Water Standards, MCLs

Table A-3

Maximum Concentrations for Title 22

PG&E Program Quality Assurance Project Plan

					CA TTCL/STLC						LCS Accuracy Control Limits (%R)		MS/MSD Accuracy Control Limits (%R)		Precision Soil
Method	Constituent	CAS	Units	TCLP Regulatory Standards	Title 22 TTLC MCL (mg/kg)	If TTLC Concentration is ≥ this value STLC Analysis Must be performed	Title 22 STLC MCL	Most Stringent Screening Level	RL	Does RL Exceed Screening Level?	Lower Limit	Upper Limit	Lower Limit	Upper Limit	% RPD
SW6010B	Antimony	7440-36-0	mg/kg	--	500	150	15	15	5	NO	80	120	75	125	20
SW6010B	Arsenic	7440-38-2	mg/kg	5	500	50	5	5	5	NO	80	120	75	125	20
SW6010B	Barium	7440-39-3	mg/kg	100	10,000	1,000	100	100	10	NO	80	120	75	125	20
SW6010B	Beryllium	7440-41-7	mg/kg	--	75	7.5	0.75	0.75	1	YES	80	120	75	125	20
SW6010B	Cadmium	7440-43-9	mg/kg	1	100	10	1	1	1	NO	80	120	75	125	20
SW6010B	Chromium	7440-47-3	mg/kg	5	2,500	50	5	5	5	NO	80	120	75	125	20
SW3060A	Chromium, Hexavalent	18540-29-9	mg/kg	--	500	50	5	5	0.4	NO	80	120	75	125	20
SW6010B	Cobalt	7440-48-4	mg/kg	--	8,000	800	80	80	10	NO	80	120	75	125	20
SW6010B	Copper	7440-50-8	mg/kg	--	2,500	250	25	25	5	NO	80	120	75	125	20
SW6010B	Lead	7439-92-1	mg/kg	5	1,000	50	5	5	5	NO	80	120	75	125	20
SW7470A	Mercury	7439-97-6	mg/kg	0.2	20	2	0.2	0.2	0.1	NO	75	125	75	125	20
SW6010B	Molybdenum	7439-98-7	mg/kg	--	3,500	3,500	350	350	10	NO	80	120	75	125	20
SW6010B	Nickel	7440-02-0	mg/kg	--	2,000	200	20	20	5	NO	80	120	75	125	20
SW6010B	Selenium	7782-49-2	mg/kg	1	100	10	1	1	5	YES	80	120	75	125	20
SW6010B	Silver	7440-22-4	mg/kg	5	500	50	5	5	5	NO	80	120	75	125	20
SW6010B	Thallium	7440-28-0	mg/kg	--	700	70	7	7	5	NO	80	120	75	125	20
SW6010B	Vanadium	7440-62-2	mg/kg	--	2,400	240	24	24	5	NO	80	120	75	125	20
SW6010B	Zinc	7440-66-6	mg/kg	--	5,000	2,500	250	250	10	NO	80	120	75	125	20
SW8260B	Benzene	71-43-2	mg/L	0.5	--	--	--	0.5	--	YES	--	--	--	--	--
SW8260B	Carbon tetrachloride	56-23-5	mg/L	0.5	--	--	--	0.5	--	YES	--	--	--	--	--
SW8260B	Chlorobenzene	108-90-7	mg/L	100	--	--	--	100	--	YES	--	--	--	--	--
SW8260B	Chloroform	67-66-3	mg/L	6	--	--	--	6	--	YES	--	--	--	--	--
SW8260B	o-Cresol (2-Methylphenol)	95-48-7	mg/L	200	--	--	--	200	--	YES	--	--	--	--	--
SW8260B	m-Cresol	108-39-4	mg/L	200	--	--	--	200	--	YES	--	--	--	--	--
SW8260B	p-Cresol (4-Methylphenol)	106-44-5	mg/L	200	--	--	--	200	--	YES	--	--	--	--	--
SW8260B	Total Cresols		mg/L	200	--	--	--	200	--	YES	--	--	--	--	--
SW8260B	1,4-Dichlorobenzene	106-46-7	mg/L	7.5	--	--	--	7.5	--	YES	--	--	--	--	--
SW8260B	1,2-Dichloroethane (EDC)	107-06-2	mg/L	0.5	--	--	--	0.5	--	YES	--	--	--	--	--
SW8260B	1,1-Dichloroethylene	75-35-4	mg/L	0.7	--	--	--	0.7	--	YES	--	--	--	--	--
SW8260B	Hexachlorobutadiene	87-68-3	mg/L	0.5	--	--	--	0.5	--	YES	--	--	--	--	--
SW8260B	Tetrachloroethylene (PCE)	127-18-4	mg/L	0.7	2,040	--	204	0.7	--	YES	--	--	--	--	--
SW8260B	Vinyl chloride	75-01-4	mg/L	0.2	--	--	--	0.2	--	YES	--	--	--	--	--
SW8260B	Trichloroethylene (TCE)	79-01-6	mg/L	0.5	--	--	--	0.5	--	YES	--	--	--	--	--
SW8260B	2-Butanone (MEK)	78-93-3	mg/L	200	--	--	--	200	--	YES	--	--	--	--	--
SW8270C	2,4-Dinitrotoluene	121-14-2	mg/L	0.13	--	--	--	0.13	--	YES	--	--	--	--	--
SW8270C	Hexachlorobenzene	118-74-1	mg/L	0.13	--	--	--	0.13	--	YES	--	--	--	--	--
SW8270C	Hexachloroethane	67-72-1	mg/L	3	--	--	--	3	--	YES	--	--	--	--	--
SW8270C	Hexachlorobutadiene	87-68-3	mg/L	0.5	--	--	--	0.5	--	YES	--	--	--	--	--
SW8270C	Nitrobenzene	98-95-3	mg/L	2	--	--	--	2	--	YES	--	--	--	--	--
SW8270C	Pentachlorophenol	87-86-5	mg/L	100	17	--	1.7	1.7	--	YES	--	--	--	--	--
SW8270C	2,4,5-Trichlorophenol	95-95-4	mg/L	400	--	--	--	400	--	YES	--	--	--	--	--
SW8270C	2,4,6-Trichlorophenol	88-06-2	mg/L	2	--	--	--	2	--	YES	--	--	--	--	--
SW8270C	Pyridine	110-86-1	mg/L	5	--	--	--	5	--	YES	--	--	--	--	--
SW8270C	3,3-Dichlorobenzidine		mg/L	0.01	--	--	--	0.01	--	YES	--	--	--	--	--
SW8081A	Endrin	72-20-8	mg/L	0.02	0.2	--	0.02	0.02	--	YES	--	--	--	--	--
SW8081A	Heptachlor (and its epoxide)	76-44-8	mg/L	0.008	4.7	--	0.47	0.008	--	YES	--	--	--	--	--
SW8081A	Methoxychlor	72-43-5	mg/L	10	100	--	10	10	--	YES	--	--	--	--	--
SW8081A	Toxaphene	8001-35-2	mg/L	0.5	5	--	0.5	0.5	--	YES	--	--	--	--	--
SW8081A	Chlordane	57-74-9	mg/L	0.03	2.5	--	0.25	0.03	--	YES	--	--	--	--	--
SW8081A	Lindane	58-89-9	mg/L	0.4	4	--	0.4	0.4	--	YES	--	--	--	--	--
SW8081A	Aldrin	309-00-2	mg/L	--	1.4	--	0.14	0.14	--	YES	--	--	--	--	--

Table A-3

Maximum Concentrations for Title 22

PG&E Program Quality Assurance Project Plan

					CA TTCL/STLC						LCS Accuracy Control Limits (%R)		MS/MSD Accuracy Control Limits (%R)		Precision Soil
Method	Constituent	CAS	Units	TCLP Regulatory Standards	Title 22 TTLC MCL (mg/kg)	If TTLC Concentration is ≥ this value STLC Analysis Must be performed	Title 22 STLC MCL	Most Stringent Screening Level	RL	Does RL Exceed Screening Level?	Lower Limit	Upper Limit	Lower Limit	Upper Limit	% RPD
SW8081A	Kepone	143-50-0	mg/L	--	21	--	2.1	2.1	--	YES	--	--	--	--	--
SW8081A	4,4'-DDD	72-54-8	mg/L	--	1	--	0.1	0.1	--	YES	--	--	--	--	--
SW8081A	4,4'-DDE	72-55-9	mg/L	--	1	--	0.1	0.1	--	YES	--	--	--	--	--
SW8081A	4,4'-DDT	50-29-3	mg/L	--	1	--	0.1	0.1	--	YES	--	--	--	--	--
SW8081A	Dieldrin	60-57-1	mg/L	--	8	--	0.8	0.8	--	YES	--	--	--	--	--
SW8081A	Heptachlor	76-44-8	mg/L	--	4.7	--	0.47	0.47	--	YES	--	--	--	--	--
SW8151A	2,4-Dichlorophenoxyacetic acid (2,4-D)	94-75-7	mg/L	10	100	--	10	10	--	YES	--	--	--	--	--
SW8151A	2,4,5-Trichlorophenoxypropionic acid (2,4,5-TP) (Silvex)	93-72-1	mg/L	1	10	--	1	1	--	YES	--	--	--	--	--
SW8082	Polychlorinated biphenyls (PCB)		mg/L	--	50	--	5	5	--	YES	--	--	--	--	--
Dioxins	Dioxin (2,3,7,8-TCDD)	1746-01-6	mg/L	--	0.01	--	0.001	0.001	--	YES	--	--	--	--	--

Notes:

mg/L = milligrams per liter

mg/kg = milligrams per kilogram

TCLP = toxicity characteristic leaching procedure

STLC = soluble threshold limit concentration

TTLC = total threshold limit concentration

QAPP Addendum

Addendum

Addendum to the PG&E Program Quality Assurance Project Plan for the Topock Groundwater Remedy

PG&E Topock Compressor Station Needles, California

Prepared for

Pacific Gas and Electric Company

Revision 2 (November 2015)

CH2MHILL®

155 Grand Avenue
Suite 800
Oakland, CA 94612

Contents

1.0 Introduction 1

2.0 Project Organization and Responsibility 1
2.1 Project Organization 1
2.2 Certification Requirements 1

3.0 Sampling Procedures 1
3.1 Sampling Design 1
3.2 Field Sampling Procedures 1
3.3 Additional or Revised QC Steps for Hexavalent Chromium 3
3.4 Additional QC Steps for Hexavalent Chromium in Select Floodplain Well Samples 3
3.5 Additional QC Steps for Cr(T) and Cr(VI) — River Samples 5
3.6 Additional Laboratory QC Steps 5

4.0 Method Quality Objectives and Quality Assurance Program 6
4.1 Analytical Requirements 6
4.1.1 Reporting Limits 7
4.1.2 Calibration 7
4.1.3 Matrix Spike for Hexavalent Chromium Analyses 7
4.1.4 Matrix Spike and Dilution Protocol 7
4.2 Data Validation 7

5.0 Retention of Records 7

6.0 References 8

Exhibits

3-1 List of PG&E Program SOPs Applicable to the Topock Groundwater Remedy 2
3-2 Floodplain Wells Recommended for Additional Quality Control Steps 4

Tables

4-1 Reporting Limits, Accuracy, and Precession Limits for Soil
4-2 Reporting Limits, Accuracy, and Precession Limits for Groundwater
4-3 Maximum Concentrations for Title 22

Addendum to the PG&E Program Quality Assurance Project Plan for the Topock Groundwater Remedy

1.0 Introduction

This Addendum to the *PG&E Program Quality Assurance Project Plan* (QAPP) Revision 2 (CH2M HILL 2012) has been prepared to address any variations from the QAPP or specifications associated with the Topock Groundwater Remedy (the project) that are not included or defined in the QAPP document. The laboratories will be required to adhere to the QAPP and then use the specific information outlined within this Addendum to supersede the QAPP information.

In compliance with the 1996 Corrective Action Consent Agreement (CACA) (California Department of Toxic Substances Control [DTSC] 1996) and the Remedial Design/Remedial Action (RD/RA) Consent Decree (DOI 2013), the sampling and analytical procedures set forth in the QAPP (CH2M HILL 2012), this Addendum, as well as the Sampling and Monitoring Plan (Volume 2 of the Operation and Maintenance Manual) will be followed during remedy operation.

Over the decades-long operation and optimization of the remedy, updates to the aforementioned documents may be necessary for a variety of reasons (e.g., changes driven by field conditions, changes driven by regulations, etc.). As with current practice and required by the QAPP, Standard Operating Procedures (SOPs) will be reviewed on annual basis, at a minimum, and PG&E will inform the agencies of material and substantive changes to the SOPs, as well as the rationale for the changes, prior to implementation.

2.0 Project Organization and Responsibility

2.1 Project Organization

For information on project organization refer to the Operation and Maintenance (O&M) Manual, Main Text, Section L2, and the Construction/Remedial Action Work Plan Section 2.1.

2.2 Certification Requirements

All laboratories participating in analytical services will have a documented Quality System and be certified under the National Environmental Laboratory Accreditation Program (NELAP) or the State of California Environmental Laboratory Accreditation Program (ELAP). Laboratories in California will be required to be certified under the ELAP. Additional accreditation may also be required. The laboratory managers will be responsible for ensuring that all laboratory personnel have been properly trained and are qualified to perform their assigned tasks.

3.0 Sampling Procedures

3.1 Sampling Design

Sampling and monitoring activities are needed for compliance purposes and for effective operation and maintenance of the groundwater remedy. The rationale for the sampling design (sampling locations, frequency, and analytes) and the Data Quality Objectives (DQO) process is documented in the O&M Manual, Volume 2, Sampling and Monitoring Plan.

3.2 Field Sampling Procedures

The groundwater remedy will use the project-specific field database, planned sample tables, chain-of-custody (CoC) forms, and other database-generated paperwork (e.g., purge forms, calibration log books). All sample collection and related activities will follow the SOPs provided in Appendix A of the Sampling and Monitoring Plan. Exhibit 3-1 lists the relevant SOPs for the remedy. Over the decades-long operation of the remedy, SOPs may be updated. The Field Lead and Project Chemist will ensure that the sampling is performed in accordance with the updated SOPs.

EXHIBIT 3-1
List of PG&E Program SOPs Applicable to the Topock Groundwater Remedy
Addendum to the PG&E Program Quality Assurance Project Plan for the Topock Groundwater Remedy

SOP	Title	Version	Date
SOP-A1	Purging and Sampling of Groundwater Monitoring Wells, Well-Volume Method	Rev 06	9/28/2015
SOP-A2	Purging and Sampling of 1-inch-diameter Groundwater Monitoring Wells, Modified Well-Volume Method	Rev 06	9/28/2015
SOP-A3	Purging and Sampling of Active and Inactive Water Supply Wells	Rev 06	9/28/2015
SOP-A4	Depth-Specific Surface Water Sampling	Rev 05	10/12/2015
SOP-A5	Groundwater Sampling from Sonic Drilling Boreholes	Rev 02	10/12/2015
SOP-A6	Sample Field Filtration and Preservation for Metals Analyses	Rev 04	7/31/2012
SOP-A7	Water Level Measurements	Rev 05	9/28/2015
SOP-A8	Field Water Quality Measurements Using a Flow-through Cell	Rev 02	9/28/2015
SOP-A9	Calibration of Field Instruments	Rev 06	10/12/2015
SOP-A10	Decontamination of Water Sampling Equipment	Rev 06	10/12/2015
SOP-A11	Total Depth Measurements	Rev 01	10/12/2015
SOP-A12	Field Water Quality Measurements for Grab Samples	Rev 01	9/28/2015
SOP-A13	Spill Prevention, Containment, and Control Measures for Monitoring Well Development, Purging, and Sampling	Rev 04	10/12/2015
SOP-A14	Pore Water Sampling	Rev 01	10/12/2015
SOP-A16	Access Routes	Rev 03	10/13/2015
SOP-A17	Groundwater and Surface Water Mobile Integrated Sample Tracking	Rev 02	12/5/2008
SOP-A18	Purging and Sampling of Groundwater Wells Minimal Drawdown Method	Rev 02	9/28/2015
SOP-A19	Sampling of Groundwater Monitoring Wells Hydrasleeve No Purge Method	Rev 02	9/28/2015
SOP-A22	Procedures for Calculation of Freshwater Equivalent Heads	Rev 02	10/12/2015
SOP-A23	Sample Handling and Custody	Rev 01	10/12/2015
SOP-L1	Hexavalent Chromium Analysis by Hach Method 1560	Rev 04	10/13/2015
SOP-L2	Ferrous Iron Analysis by Hach Method 8146	Rev 03	10/13/2015
SOP-L3	Total Chromium Analysis by Hach Method 8024	Rev 02	10/13/2015
SOP-L4	Conductivity Analysis by Hach Method 8160	Rev 02	10/13/2015
SOP-L8	Matrix Spike Preparation	Rev 01	6/5/2014
SOP-L9	pH Measurement	Rev 02	10/13/2015
SOP-L10	Hach Model 2100P Turbidimeter Calibration and Analysis Procedures	Rev 02	10/13/2015
SOP-L13	Nitrate Analysis by Hach Method 8171	Rev 01	10/13/2015
SOP-L14	Sulfate Analysis by Hach Method 8051	Rev 01	10/13/2015
SOP-L15	Alkalinity Analysis	Rev 01	10/13/2015
SOP-L16	Total Organic Carbon Analysis by Hach Method 10129	Rev 01	10/13/2015
SOP-L17	Orthophosphate Analysis by Hach Method 8048	Rev 01	10/13/2015

EXHIBIT 3-1
List of PG&E Program SOPs Applicable to the Topock Groundwater Remedy
Addendum to the PG&E Program Quality Assurance Project Plan for the Topock Groundwater Remedy

SOP	Title	Version	Date
SOP-L18	Manganese Analysis by Hach Method 8149	Rev 01	10/13/2015
SOP-L19	Total Dissolved Solids Analysis	Rev 01	10/13/2015
SOP-B16	Field-Portable X-Ray Fluorescence Soil Sampling	Rev 00	9/5/2008
SOP-C1	Solinst Pressure Transducers	Rev 02	10/13/2015
SOP-C2	Pressure Transducer Upload to Topock Database	Rev 01	5/2/2014
Remedy-SOP-01	Process Water Sampling	Rev 00	6/19/2012
Remedy-SOP-02	Safe Fueling and Fuel Handling Policy	Rev 00	7/5/2013

Notes:
The SOPs listed in this exhibit are provided in Appendix A of the Sampling and Monitoring Plan (Volume 2 of the O&M Manual).
Information from SOP-L5 was incorporated into SOP-L10; SOP-L5 was deleted.
Information from SOP-L11 was incorporated into SOP-L9; SOP-L11 was deleted.
Information from SOP-L12 was incorporated into SOP-L1 and SOP-L2; SOP-L12 was deleted.

3.3 Additional or Revised QC Steps for Hexavalent Chromium

The following quality control (QC) steps will be implemented for all samples related to the groundwater remedy:

1. Additional QC Step – All equipment blanks will be blind (versus being identified to the laboratory as “blank”, or “EB” for equipment blanks), with the exception of additional well-specific equipment blanks for the floodplain wells (see Step 2 in Section 3.4).

2. Additional QC Step – Certified filters will be purchased for groundwater and surface water samples. These filters are packaged with manufactures’ testing data and certification. If uncertified filters must be used, each lot (if lot information is available) will be analyzed for hexavalent chromium (Cr[VI]). If no lot number information is available, one filter per day will be analyzed for Cr(VI).

3. Revised QC Step – The following protocol for Cr(VI) has been established using the ammonium sulfate buffer solution for Cr(VI) sample preservation in the field:

    - Within 2 weeks prior to any field event requiring preservation for Cr(VI), fresh buffer solution will be made and the purity checked by the laboratory; the resulting chromatogram will be emailed to the CH2M HILL project chemist for verification.

    - All Cr(VI) samples will be field-filtered and preserved to a pH range of 9.3 to 9.7 with ammonium sulfate buffer solution.

    - The laboratory will confirm preservation at the time of sample receipt.

    - The Topock groundwater remedy will use EPA Methods E218.6 or SM3500-Cr (use of Methods SW7199 and SW7196 are restricted and must be approved by the project chemist) for Cr(VI) analyses. The use of these methods was approved by DTSC in 2008 (DTSC 2008).

3.4 Additional QC Steps for Hexavalent Chromium in Select Floodplain Well Samples

In addition to the QC steps discussed in Section 3.3, the additional QC steps outlined in this section will be followed during sampling of a) monitoring wells located in or near the floodplain (as defined in Exhibit 3-2) that are currently non-detect (or detected at less than 5 parts per billion) for Cr(VI), and b) future wells located in or

near the floodplain as determined by the CH2M HILL project chemist. As water quality changes, the list of wells in Exhibit 3-2 will be reviewed periodically (initially on an annual basis) and updated as applicable.

EXHIBIT 3-2
Floodplain Wells Recommended for Additional Quality Control Steps
Addendum to the PG&E Program Quality Assurance Project Plan for the Topock Groundwater Remedy

MW-21	MW-33-040	MW-43-075	MW-52S
MW-27-020	MW-34-055	MW-43-090	MW-53D
MW-27-060	MW-34-080	MW-44-070	MW-53M
MW-27-085	MW-36-070	MW-49-135	MW-54-85
MW-28-025	MW-39-040	MW-49-275	MW-54-140
MW-28-090	MW-42-055	MW-49-365	MW-54-195
MW-29	MW-42-065	MW-52D	MW-55-45
MW-32-020	MW-43-025	MW-52M	MW-55-120
MW-32-035			

The additional QC steps for the wells listed in Exhibit 3-2 are as follows:

1. Two Cr(VI) sample containers will be filled for each floodplain well listed in Exhibit 3-2, field filtered, and preserved. The duplicate sample will be placed on hold at the laboratory and will not be analyzed unless needed to investigate an anomalous result.
    - Cr(VI) will be analyzed by method E218.6R.
    - The sample labels will have a designation of “1 of 2” and “2 of 2”.
    - The sample identifier (ID) will be recorded and the existence of two sample containers will be indicated on the CoC form.
2. For each of the wells listed in Exhibit 3-2 that have non-dedicated pumps, an extra equipment blank will be collected after decontaminating the pump and prior to lowering the pump down the well. For example, if sampling has just been completed at MW-42-055 and the next well is MW-42-065, the sampling team will need to decontaminate the portable pump and then collect MW-42-065-XXX-EB before placing the pump in MW-42-065.
    - The well-specific equipment blanks (e.g., MW-42-065-XXX-EB) will be placed on hold and will not be analyzed unless needed to investigate an anomalous result.

The additional QC steps were put into place due to the sensitive nature of the sample locations, where low level detections could have large implications if shown to be correct. These additional QC steps are of little use for wells in the uplands where slight differences of a few ppb are of less concern, especially where the sample concentration is less than the background concentration. At the same time, samples with concentrations greater than 10 – 15 ppb can have sufficient variability within the analytical methods to exceed the possible influence from contamination sources or colloidal suspension concentrations.

Extra containers and EBs prescribed in Steps 1 and 2 above are collected to help determine the source for any possible anomalous results found in the wells listed in Exhibit 3-2. All the wells located near the river (specifically those around the active reducing zone) are susceptible to colloidal suspension of chromium which can cause a high variability between the Cr(T) and Cr(VI) results. The special EBs are collected to eliminate the possibility of cross-contamination between the wells (i.e., to verify that carry-over is not occurring).

Note that the MW-55 and MW-21 wells are not necessarily in the floodplain, but are located in areas “near” the river where the “normal” results are either non-detect or low concentrations. In the event results are “detected”

higher than normal or where the Cr(T) and Cr(VI) concentrations differed more than is considered normal, PG&E works to determine the likely causes and provide the analysis in the report where the results are reported.

3.5 Additional QC Steps for Cr(T) and Cr(VI) — River Samples

In addition to the QC steps discussed in Section 3.3, all river samples (shoreline and in-channel) will require the following additional QC steps:

1. For surface water sampling events; three analyte-specific sample containers will be collected from each sample location for both total chromium (Cr[T]) and Cr(VI). The laboratory will analyze the initial sample aliquot; if that result is an anomalous result (any detected concentration in the river will be considered anomalous), corrective action will be implemented and an additional aliquot of the original sample will be reanalyzed along with an aliquot from each of the additional sample volumes for comparison purposes. In addition, the agencies will be notified immediately if anomalous Cr(T) or Cr(VI) results are detected in river samples which require reanalysis.
    - Cr(VI) will be analyzed by method E218.6R. Cr(T) will be analyzed by SW-6020A.
    - The sample labels will have a designation of “1 of 3”, “2 of 3”, and “3 of 3”.
    - The sample ID will be recorded and the existence of three sample containers will be indicated on the CoC form.
2. Blank samples will be collected daily from two sets of randomly selected dedicated equipment (tubing).
3. In addition, one atmospheric (ambient) blank will be collected at the PG&E Topock site per day of river sampling. The atmospheric blank and the dedicated equipment blanks will be placed on hold at the laboratory, and analyzed only in event of river sample detections.
4. The laboratory is required to ensure that the buffer solution and initial calibration method blank concentrations are less than the method detection limit (MDL) prior to proceeding with sample analysis. In all cases in which corrective actions are applied, the CH2M HILL project chemist will be notified to aid in the corrective action process.
5. In the event corrective action is taken due to an anomalous result, the laboratory will document (in detail) the procedure in the analytical report’s case narrative. The narrative must include, at a minimum, the identity of each “anomalous” detection, the result from each analysis, the basis for what likely caused the detection if the detection is found unrelated to the actual sample (e.g., background contamination), and any future corrective action that will be implemented to resolve the identified problem(s).

3.6 Additional Laboratory QC Steps

To ensure precision and accuracy for the project, analytical laboratories will conduct the following additional QC steps for Cr(T) analyses, Cr(VI) analyses, and all other analyses.

All Cr(T) Analysis

1. The laboratory must use the average of three scans/injections to calculate relative standard deviation (RSD) for the analysis of all metals.
2. All reported detections must have a %RSD of less than or equal to 15% for the triplicate inductively coupled plasma/matrix spike injections.
3. All groundwater and soil samples will be digested using an appropriate method.
4. The laboratory may be asked to investigate situations where the Cr(T) and Cr(VI) results differ by more than 20% relative percent difference (RPD) for samples with concentrations > 4 ppb.

All Cr(VI) Analysis

1. The laboratory will analyze a QC sample (low level check standard) after the initial calibration, at the reporting limit (RL) concentration.
2. The laboratory is required to ensure that the buffer solution, initial calibration blank, and method blank concentrations are less than the MDL prior to proceeding with sample analysis. Sample analysis will only proceed after the buffer solution and method blank concentrations are less than the MDL.
3. Initial calibration must be re-established if any of the following occur:
   - The last calibration was established more than 2 weeks prior to the start of a sample's analysis.
   - Two consecutive continuing calibration standards fail.
   - Any of the following operating conditions change:
     - Major maintenance is performed.
     - The system fluid is changed.
     - The instrument requires relocation.
     - The analytical column is replaced.
4. The laboratory will establish a retention time window and monitor the samples for exceedances.
5. If any calibration blank other than the initial calibration blank (see number 3 above) has a detection greater than the RL, and if there are detections in any sample, the laboratory records will document the concentrations and corrective action will be performed. The corrective action will include sample reanalysis and may also include change of reagents, eluate, and/or standards; and/or optimizing instrumentation. In all cases in which corrective actions are applied, the CH2M HILL project chemist will be notified to aid in the corrective action process.
6. If any calibration blank other than the initial calibration blank (see number 3 above) has a detection greater than the MDL but below the RL, and if there are detections in any sample, the laboratory records will document the concentrations and corrective action will be performed. However, the manner of reporting results will remain unchanged (i.e., results less than the RL will be reported as a non-detected result at 0.2 µg/L). Corrective action may include sample reanalysis; change of reagents, eluate and/or standards; and/or optimizing instrumentation. In all cases in which corrective actions are applied, the CH2M HILL project chemist will be notified to aid in the corrective action process.

All Other Analyses

1. The laboratory will supply sample containers that are pre-cleaned and certified to EPA-specified standards for low level chemical analysis for all PG&E programs.
2. In all cases in which corrective actions are applied, the CH2M HILL project chemist will be notified to aid in the corrective action process.

4.0 Method Quality Objectives and Quality Assurance Program

The data quality goal for the groundwater remedy is to achieve defensible data with the highest quality possible, given the variability of parameters for the groundwater remedy. The final output is a data set designed and validated to meet the qualitative and quantitative needs of the project. See Tables 4-1 through 4-3 at the end of this Addendum for project-specific reporting level requirements and EPA/California screening-level information that may differ from the QAPP.

4.1 Analytical Requirements

This Addendum specifies project-specific analytes and analytical methods that differ from the QAPP. All methods, analytes, or QC parameters specified in this Addendum that may differ from the QAPP supersede the criteria in the QAPP.

4.1.1 Reporting Limits

RLs should be a minimum of two times greater than the calculated MDLs. RLs used by the laboratory should not be greater than the RL objectives listed in Tables 4-1 through 4-3. Note that in Table 4-1, the 0.4 mg/kg RL used for this project is currently the lowest RL achievable using SW7199/3060A and is well below the industrial soil screening level. Screening levels are established by use of statistical analysis and are not based on the analytical capabilities of laboratories or methods.

Only analytes detected at concentrations greater than the project-specific RL will be reported. Analytes detected at less than the RL will be flagged "U" and reported as not detected at the RL.

RLs and sample results shall be reported to two significant figures if less than 10 micrograms per liter (µg/L) (parts per billion) and to three significant figures otherwise.

4.1.2 Calibration

In the initial calibration (for all instruments), a standard at a concentration equal to or less than the RL must be included.

Initial calibration must be re-established if any of the following conditions exist:

- The last calibration was established more than 1 year prior to the start of a sample's analysis (gas chromatography, gas chromatography-mass spectrometry, inductively coupled plasma, and inductively coupled plasma-mass spectrometry)
- The last calibration was established more than 2 weeks prior to the start of a sample's analysis (ion chromatography, and other "wet" chemistry analytical instruments)
- Two consecutive continuing calibration standards fail
- The operating conditions change; for example, any of the following:
  - Major maintenance is performed
  - The fluid or gas "carrier" type changes
  - The instrument requires relocation

4.1.3 Matrix Spike for Hexavalent Chromium Analyses

Interference from Topock groundwater is known to reduce the sensitivity of Method EPA 218.6. This can result in an incorrect assessment of the analyte identification or the specific RL if the Matrix Spike and Dilution Protocol is not followed (see Section 5.4.4.1 of the QAPP). All Topock groundwater and surface water samples analyzed by Method EPA 218.6 will follow the Matrix Spike and Dilution Protocol.

4.1.4 Matrix Spike and Dilution Protocol

Matrix interference has been encountered that affects the sensitivity for hexavalent chromium by ion chromatography methods. CH2M HILL shall direct the laboratories to perform an additional quality assurance/ quality control (QA/QC) analyses to aid in assessing any effect on method sensitivity for each project due to the sample matrix. All Topock groundwater and surface water samples analyzed by Method EPA218.6 will follow the Matrix Spike and Dilution Protocol.

The analytes and analytical requirements are presented in Tables 4-1 through 4-3.

4.2 Data Validation

The validation for this QAPP Addendum will follow the Level 3B designation from the QAPP and will be performed by the project chemist and designees.

5.0 Retention of Records

Hardcopy and electronic versions will be archived in project files, on electronic archive tapes, and/or other electronic storage media for the duration of remedy operation plus 10 years, as specified in contractual agreements. All electronic data will be subject to routine back-up until it is archived for long-term retention.

The PG&E Construction Manager, or designee, is responsible for ensuring that training and certification requirements of the QAPP are satisfied. The Construction Headquarters will serve as the primary repository for records during construction.

6.0 References

California Department of Toxic Substances Control (DTSC). 1996. *Corrective Action Consent Agreement (Revised), Pacific Gas and Electric Company's Topock Compressor Station, Needles, California.* EPA ID No. CAT080011729. February 2.

_____. 2008. Letter from Aaron Yue/DTSC to Yvonne Meeks/PG&E. Subject: "Analytical Method Change for Evaluation of Hexavalent Chromium at PG&E Topock Compressor Station, Needles, California (EPA ID No. CAT080011729)." January 18.

CH2M HILL. 2007. *PG&E Topock – River Sampling and Lab Audit Project Audit Report* (Audit No. 3500753340-07-01).

_____. 2012. *PG&E Program Quality Assurance Project Plan, Rev 2*. August.

U.S. Environmental Protection Agency (EPA). 1996. *Test Methods for Evaluating Solid Waste, Physical and Chemical Methods, SW-846, 3rd Edition, Update 1-III*.

_____. 2007. *Final Update Rule – Parts 122-503 of Title 40 of the Code of Federal Regulations (CFR)*.

_____. 2012. *Final Update Rule – Parts 122-503 of Title 40 of the Code of Federal Regulations (CFR)*.

U.S. Department of the Interior (DOI). 2013. Remedial Action/Remedial Design Consent Decree (CD) between the United States of America and Pacific Gas & Electric Company. Case 5:13-cv-00074-BRO-OP, Document 23. Entered November 21.

Tables

TABLE 4-1
Reporting Limits, Accuracy, and Precession Limits for Soil
PG&E Program Quality Assurance Project Plan Addendum

Method	Constituent	CAS	Units	QAPP RL[1]	EPA Regional Screening Levels - May 2012		EPA Regional Screening Levels - 2008		DTSC CHHSL		Most Stringent Screening Level[2]	Does RL Exceed Screening Level?	LCS Accuracy Control Limits (%R)		MS/MSD Accuracy Control Limits (%R)		Precision Soil
					Residential	Commercial	Residential	Commercial	Residential	Commercial			Lower Limit	Upper Limit	Lower Limit	Upper Limit	% RPD
SW 9012 or SW 9014	Cyanide	57-12-5	mg/kg	0.25	47	610	1,600	20,000	--	--	0,047	NO	*	*	*	*	30
Walkley-Black	Total organic carbon	TOC	mg/kg	50	--	--	--	--	--	--	--	NO	75	125	75	125	35
SW 9050	Specific conductance	Conductance	µmhos/cm	5	--	--	--	--	--	--	--	NO	75	125	75	125	20
SW 9045	pH	pH	pH units	0.1	--	--	--	--	--	--	--	NO	--	--	--	--	20
SM 2540 B/EPA 160.3	percent moisture	Moist	Percent	--	--	--	--	--	--	--	--	NO	--	--	--	--	20
EPA 300.0	Fluoride	Fluoride	mg/kg	2	--	--	4,700	61,000	--	--	4,700	NO	70	130	70	130	35
EPA 300.0	Chloride	Chloride	mg/kg	2	--	--	--	--	--	--	--	NO	70	130	70	130	35
EPA 300.0	Sulfate	Sulfate	mg/kg	2	--	--	--	--	--	--	--	NO	70	130	70	130	35
EPA 821/R-91-100	Sulfide, acid volatile	18496-25-8	mg/kg	80	--	--	--	--	--	--	--	NO	70	130	70	130	30
SW 7199	Chromium, hexavalent	18540-29-9	mg/kg	0.4	0.29	5.6	230	1,400	17	17	0.29	YES	85	115	85	115	20
SW 6010B or C/SW 6020A/EPA 200.7/EPA 200.8	Aluminum	7429-90-5	mg/kg	10	77,000	990,000	77,000	990,000	--	--	77,000	NO	85	115	75	125	20
SW 6010B or C/SW 6020A/EPA 200.7/EPA 200.8	Antimony	7440-36-0	mg/kg	2	31	410	31	410	30	380	30	NO	85	115	75	125	20
SW 6010B or C/SW 6020A/EPA 200.7/EPA 200.8	Arsenic	7440-38-2	mg/kg	0.5	0.39	1.6	0.39	1.6	0.07	0.42	0.07	YES	85	115	75	125	20
SW 6010B or C/SW 6020A/EPA 200.7/EPA 200.8	Barium	7440-39-3	mg/kg	1	15,000	190,000	15,000	190,000	5,200	63,000	5,200	NO	85	115	75	125	20
SW 6010B or C/SW 6020A/EPA 200.7/EPA 200.8	Beryllium	7440-41-7	mg/kg	0.5	160	2,000	160	2,000	150	1,700	150	NO	85	115	75	125	20
SW 6010B or C/SW 6020A/EPA 200.7/EPA 200.8	Cadmium	7440-43-9	mg/kg	0.5	70	800	70	810	1.7	7.5	1.7	NO	85	115	75	125	20
SW 6010B or C/EPA 200.7	Calcium	7440-70-2	mg/kg	100	--	--	--	--	--	--	--	NO	85	115	75	125	20
SW 6010B or C/SW 6020A/EPA 200.7/EPA 200.8	Chromium	7440-47-3	mg/kg	1	--	--	280	1,400	*	*	280	NO	85	115	75	125	20
SW 6010B or C/SW 6020A/EPA 200.7/EPA 200.8	Cobalt	7440-48-4	mg/kg	1	23	300	23	300	660	3,200	23	NO	85	115	75	125	20
SW 6010B or C/SW 6020A/EPA 200.7/EPA 200.8	Copper	7440-50-8	mg/kg	1	3,100	41,000	3,100	41,000	3,000	38,000	3,000	NO	85	115	75	125	20
SW 6010B or C/EPA 200.7	Iron	7439-89-6	mg/kg	10	55,000	720,000	55,000	720,000	--	--	55,000	NO	85	115	75	125	20
SW 6010B or C/SW 6020A/EPA 200.7/EPA 200.8	Lead	7439-92-1	mg/kg	1	400	800	400	800	150	3,500	150	NO	85	115	75	125	20
SW 6010B or C/EPA 200.7	Magnesium	7439-95-4	mg/kg	100	--	--	--	--	--	--	--	NO	85	115	75	125	20
SW 6010B or C/SW 6020A/EPA 200.7/EPA 200.8	Manganese	7439-96-5	mg/kg	1	--	--	1,800	23,000	--	--	1,800	NO	85	115	75	125	20
SW 7471A/EPA 245.5	Mercury	7439-97-6	mg/kg	0.1	10	43	6.7	28	18	180	6.7	NO	75	125	75	125	20
SW 6010B or C/SW 6020A/EPA 200.7/EPA 200.8	Molybdenum	7439-98-7	mg/kg	1	390	5,100	390	5,100	380	4,800	380	NO	85	115	75	125	20
SW 6010B or C/SW 6020A/EPA 200.7/EPA 200.8	Nickel	7440-02-0	mg/kg	1	1,500	20,000	1,600	20,000	1,600	16,000	1,500	NO	85	115	75	125	20
SW 6010B or C/EPA 200.7	Potassium	7440-09-1	mg/kg	100	--	--	--	--	--	--	--	NO	85	115	75	125	20
SW 6010B or C/SW 6020A/EPA 200.7/EPA 200.8	Selenium	7782-49-2	mg/kg	1	390	5,100	390	5,100	380	4,800	380	NO	85	115	75	125	20
SW 6010B or C/SW 6020A/EPA 200.7/EPA 200.8	Silver	7440-22-4	mg/kg	1	390	5,100	390	5,100	380	4,800	380	NO	85	115	75	125	20
SW 6010B or C/EPA 200.7	Sodium	7440-23-5	mg/kg	100	--	--	--	--	--	--	--	NO	85	115	75	125	20
SW 6010B or C/SW 6020A/EPA 200.7/EPA 200.8	Thallium	7440-28-0	mg/kg	2	0.78	10	5.1	66	5	63	0.78	YES	85	115	75	125	20
SW 6010B or C/SW 6020A/EPA 200.7/EPA 200.8	Vanadium	7440-62-2	mg/kg	1	--	--	550	7,200	530	6,700	530	NO	85	115	75	125	20
SW 6010B or C/SW 6020A/EPA 200.7/EPA 200.8	Zinc	7440-66-6	mg/kg	2	23,000	310,000	23,000	310,000	23,000	100,000	23,000	NO	85	115	75	125	20
SW 8015B or C or D	Motor Oil	TPH-motor oil	mg/kg	10	--	--	--	--	--	--	--	NO	60	120	60	120	50
SW 8015B or C or D	TPH-Diesel	TPH-diesel	mg/kg	10	--	--	--	--	--	--	--	NO	51	153	51	153	50
SW 8015B or C or D	TPH-Gasoline	TPH-gasoline	mg/kg	1	--	--	--	--	--	--	--	NO	57	146	57	146	50
SW 8081A or B	4,4'-DDD	72-54-8	ug/kg	4	2,000	7,200	2,000	7,200	2,300	9,000	2,000	NO	50	139	50	139	50
SW 8081A or B	4,4'-DDE	72-55-9	ug/kg	4	1,400	5,100	1,400	5,100	1,600	6,300	1,400	NO	68	126	68	126	50
SW 8081A or B	4,4'-DDT	50-29-3	ug/kg	4	1,700	7,000	1,700	7,000	1,600	6,300	1,600	NO	46	135	46	135	50
SW 8081A or B	Aldrin	309-00-2	ug/kg	4	29	100	29	100	33	130	29	NO	47	120	47	120	50
SW 8081A or B	alpha-HCH	319-84-6	ug/kg	4	77	270	77	270	--	--	77	NO	62	125	62	125	50
SW 8081A or B	alpha-Chlordane	5103-71-9	ug/kg	4	--	--	--	--	430	1,700	430	NO	63	121	63	121	50
SW 8081A or B	beta-HCH	319-85-7	ug/kg	4	270	960	320	1,300	--	--	270	NO	62	127	62	127	50
SW 8081A or B	delta-HCH	319-86-8	ug/kg	4	--	--	--	--	--	--	--	NO	57	130	57	130	50
SW 8081A or B	Dieldrin	60-57-1	ug/kg	4	30	110	30	110	35	130	30	NO	67	125	67	125	50
SW 8081A or B	Endosulfan I	959-98-8	ug/kg	4	--	--	--	--	--	--	--	NO	41	147	41	147	50
SW 8081A or B	Endosulfan II	33213-65-9	ug/kg	4	--	--	--	--	--	--	--	NO	37	141	37	141	50
SW 8081A or B	Endosulfan sulfate	1031-07-8	ug/kg	4	--	--	--	--	--	--	--	NO	62	135	62	135	50
SW 8081A or B	Endrin	72-20-8	ug/kg	4	18,000	180,000	18,000	180,000	21,000	230,000	18,000	NO	61	133	61	133	50
SW 8081A or B	Endrin aldehyde	7421-93-4	ug/kg	4	--	--	--	--	--	--	--	NO	37	147	37	147	50
SW 8081A or B	gamma-HCH (Lindane)	58-89-9	ug/kg	4	520	2,100	520	21,000	500	2,000	500	NO	59	123	59	123	50
SW 8081A or B	gamma-Chlordane	5103-74-2	ug/kg	4	--	--	--	--	430	1,700	430	NO	48	124	48	124	50
SW 8081A or B	Heptachlor	76-44-8	ug/kg	4	110	380	110	380	130	520	110	NO	51	140	51	140	50
SW 8081A or B	Heptachlor epoxide	1024-57-3	ug/kg	4	53	190	53	190	--	--	53	NO	66	130	66	130	50
SW 8081A or B	Methoxychlor	72-43-5	ug/kg	20	310,000	3,100,000	310,000	3,100,000	340,000	3,800,000	310,000	NO	57	143	57	143	50
SW 8081A or B	Toxaphene	8001-35-2	ug/kg	100	440	1,600	440	1,600	460	1,800	440	NO	31	136	31	136	50
SW 8082 or A	Aroclor-1016	12674-11-2	ug/kg	50	3,900	21,000	3,900	21,200	--	--	3,900	NO	41	138	41	138	50
SW 8082 or A	Aroclor-1221	11104-28-2	ug/kg	50	140	540	170	620	--	--	140	NO	45	136	45	136	50
SW 8082 or A	Aroclor-1232	11141-16-5	ug/kg	50	140	540	170	620	--	--	140	NO	45	136	45	136	50
SW 8082 or A	Aroclor-1242	53469-21-9	ug/kg	50	220	740	220	740	--	--	220	NO	43	150	43	150	50
SW 8082 or A	Aroclor-1248	12672-29-6	ug/kg	50	220	740	220	740	--	--	220	NO	44	136	44	136	50
SW 8082 or A	Aroclor-1254	11097-69-1	ug/kg	50	220	740	220	740	--	--	220	NO	41	141	41	141	50
SW 8082 or A	Aroclor-1260	11096-82-5	ug/kg	50	220	740	220	740	--	--	220	NO	61	131	61	131	50
SW 8082 or A	Total PCB	Total PCB	ug/kg	50	220	740	220	740	89	300	89	NO	--	--	--	--	--
SW 8151A	2,4-D	94-75-7	ug/kg	200	690,000	7,700,000	690	7,700	690	550	550	NO	32	121	32	121	50

TABLE 4-1
Reporting Limits, Accuracy, and Precession Limits for Soil
PG&E Program Quality Assurance Project Plan Addendum

Method	Constituent	CAS	Units	QAPP RL[1]	EPA Regional Screening Levels - May 2012		EPA Regional Screening Levels - 2008		DTSC CHHSL		Most Stringent Screening Level[2]	Does RL Exceed Screening Level?	LCS Accuracy Control Limits (%R)		MS/MSD Accuracy Control Limits (%R)		Precision Soil
					Residential	Commercial	Residential	Commercial	Residential	Commercial			Lower Limit	Upper Limit	Lower Limit	Upper Limit	% RPD
SW 8151A	2,4-DB	94-82-6	ug/kg	500	490,000	4,900,000	490	4,900	--	--	490	YES	42	145	42	145	50
SW 8151A	2,4,5-T	93-76-5	ug/kg	500	610,000	6,200,000	610	6,200	7,700	6,100	610	NO	43	139	43	139	50
SW 8151A	2,4,5-TP	93-72-1	ug/kg	200	490,000	4,900,000	490	4,900	--	--	490	NO	46	128	46	128	50
SW 8151A	Dalapon	75-99-0	ug/kg	100	1,800,000	18,000,000	1,800	18,000	--	--	1,800	NO	22	125	22	125	50
SW 8151A	Dicamba	1918-00-9	ug/kg	500	1,800,000	18,000,000	1,800	18,000	--	--	1,800	NO	56	120	56	120	50
SW 8151A	Dichloroprop	120-36-5	ug/kg	500	--	--	--	--	--	--	--	NO	72	142	72	142	50
SW 8151A	Dinoseb	88-85-7	ug/kg	100	61,000	620,000	61	620	--	--	61	YES	20	131	20	131	50
SW 8151A	MCPA	94-74-6	ug/kg	1,000	31,000	310,000	31	310	--	--	31	YES	65	120	65	120	50
SW 8151A	MCPP	7085-19-0	ug/kg	1,500	--	--	61	620	--	--	61	YES	60	118	60	118	50
SW 8260B or C	1,1,1,2-Tetrachloroethane	630-20-6	ug/kg	5	1,900	9,300	2,000	9,800	--	--	1,900	NO	74	125	74	125	30
SW 8260B or C	1,1,1-Trichloroethane (TCA)	71-55-6	ug/kg	5	8,700,000	38,000,000	9,000,000	39,000,000	--	--	8,700,000	NO	68	130	68	130	30
SW 8260B or C	1,1,2,2-Tetrachloroethane	79-34-5	ug/kg	5	560	2,800	590	2,900	--	--	560	NO	59	140	59	140	30
SW 8260B or C	1,1,2-Trichloroethane	79-00-5	ug/kg	5	1,100	5,300	1,100	5,500	--	--	1,100	NO	62	127	62	127	30
SW 8260B or C	1,1,2-Trichlorotrifluoroethane (Freon 113)	76-13-1	ug/kg	5	43,000,000	180,000,000	43,000,000	180,000,000	--	--	43,000,000	NO	65	135	65	135	30
SW 8260B or C	1,1-Dichloroethane	75-34-3	ug/kg	5	3,300	17,000	3,400	17,000	--	--	3,300	NO	73	125	73	125	30
SW 8260B or C	1,1-Dichloroethylene	75-35-4	ug/kg	5	240,000	1,100,000	250,000	1,100,000	--	--	240,000	NO	65	136	65	136	30
SW 8260B or C	1,1-Dichloropropene	563-58-6	ug/kg	5	--	--	--	--	--	--	--	NO	70	135	70	135	30
SW 8260B or C	1,2,3-Trichlorobenzene	87-61-6	ug/kg	5	49,000	490,000	--	--	--	--	49,000	NO	62	133	62	133	30
SW 8260B or C	1,2,3-Trichloropropane	96-18-4	ug/kg	5	5	95	91	410	--	--	5	NO	63	130	63	130	30
SW 8260B or C	1,2,4-Trichlorobenzene	120-82-1	ug/kg	5	22,000	99,000	87,000	400,000	--	--	22,000	NO	65	131	65	131	30
SW 8260B or C	1,2,4-Trimethylbenzene	95-63-6	ug/kg	5	62,000	260,000	67,000	280,000	--	--	62,000	NO	65	135	65	135	30
SW 8260B or C	1,2-Dibromo-3-chloropropane	96-12-8	ug/kg	5	5.4	69	5.6	73	--	--	5.4	NO	49	135	49	135	30
SW 8260B or C	1,2-Dibromoethane (EDB)	106-93-4	ug/kg	5	34	170	34	170	--	--	34	NO	70	124	70	124	30
SW 8260B or C	1,2-Dichlorobenzene	95-50-1	ug/kg	5	1,900,000	9,800,000	2,000,000	10,000,000	--	--	1,900,000	NO	74	120	74	120	30
SW 8260B or C	1,2-Dichloroethane (EDC)	107-06-2	ug/kg	5	430	2,200	450	2,200	--	--	430	NO	72	137	72	137	30
SW 8260B or C	1,2-Dichloropropane	78-87-5	ug/kg	5	940	4,700	930	4,700	--	--	930	NO	71	120	71	120	30
SW 8260B or C	1,3,5-Trimethylbenzene	108-67-8	ug/kg	5	780,000	10,000,000	47,000	200,000	--	--	47,000	NO	65	133	65	133	30
SW 8260B or C	1,3-Dichlorobenzene	541-73-1	ug/kg	5	--	--	--	--	--	--	--	NO	72	124	72	124	30
SW 8260B or C	1,3-Dichloropropane	142-28-9	ug/kg	5	1,600,000	20,000,000	1,600,000	20,000,000	--	--	1,600,000	NO	76	123	76	123	30
SW 8260B or C	1,4-Dichlorobenzene	106-46-7	ug/kg	5	2,400	12,000	2,600	13,000	--	--	2,400	NO	72	125	72	125	30
SW 8260B or C	2,2-Dichloropropane	594-20-7	ug/kg	5	--	--	--	--	--	--	--	NO	67	134	67	134	30
SW 8260B or C	2-Butanone (MEK)	78-93-3	ug/kg	50	28,000,000	200,000,000	28,000,000	190,000,000	--	--	28,000,000	NO	40	135	40	135	30
SW 8260B or C	2-Chlorotoluene	95-49-8	ug/kg	5	1,600,000	20,000,000	1,600,000	20,000,000	--	--	1,600,000	NO	69	128	69	128	30
SW 8260B or C	4-Chlorotoluene	106-43-4	ug/kg	5	1,600,000	20,000,000	5,500,000	72,000,000	--	--	1,600,000	NO	73	126	73	126	30
SW 8260B or C	4-Isopropyltoluene	99-87-6	ug/kg	6	--	--	--	--	--	--	--	NO	75	133	75	133	30
SW 8260B or C	4-Methyl-2-pentanone	108-10-1	ug/kg	50	5,300,000	53,000,000	5,300,000	52,000,000	--	--	5,300,000	NO	65	135	65	135	30
SW 8260B or C	Acetone	67-64-1	ug/kg	50	61,000,000	630,000,000	61,000,000	610,000,000	--	--	61,000,000	NO	40	141	40	141	30
SW 8260B or C	Acrolein	107-02-8	ug/kg	100	150	650	160	680	--	--	150	NO	65	135	65	135	30
SW 8260B or C	Acrylonitrile	107-13-1	ug/kg	50	240	1,200	240	1,200	--	--	240	NO	65	135	65	135	30
SW 8260B or C	Benzene	71-43-2	ug/kg	5	1,100	5,400	1,100	5,600	--	--	1,100	NO	73	126	73	126	30
SW 8260B or C	Bromobenzene	108-86-1	ug/kg	5	300,000	1,800,000	94,000	410,000	--	--	94,000	NO	66	121	66	121	30
SW 8260B or C	Bromochloromethane	74-97-5	ug/kg	5	160,000	680,000	--	--	--	--	160,000	NO	71	127	71	127	30
SW 8260B or C	Bromodichloromethane	75-27-4	ug/kg	5	270	1,400	10,000	46,000	--	--	0,270	NO	72	128	72	128	30
SW 8260B or C	Bromoform	75-25-2	ug/kg	6	62,000	220,000	61,000	220,000	--	--	61,000	NO	66	137	66	137	30
SW 8260B or C	Bromomethane	74-83-9	ug/kg	5	7,300	32,000	7,900	35,000	--	--	7,300	NO	45	141	45	141	30
SW 8260B or C	Carbon disulfide	75-15-0	ug/kg	5	820,000	3,700,000	670,000	3,000,000	--	--	670,000	NO	65	135	65	135	30
SW 8260B or C	Carbon tetrachloride	56-23-5	ug/kg	5	610	3,000	250	1,300	--	--	250	NO	67	133	67	133	30
SW 8260B or C	Chlorobenzene	108-90-7	ug/kg	5	290,000	1,400,000	310,000	1,500,000	--	--	290,000	NO	75	123	75	123	30
SW 8260B or C	Chloroethane	75-00-3	ug/kg	5	15,000,000	61,000,000	15,000,000	62,000,000	--	--	15,000,000	NO	41	141	41	141	30
SW 8260B or C	Chloroform	67-66-3	ug/kg	2	290	1,500	300	1,500	--	--	290	NO	72	124	72	124	30
SW 8260B or C	Chloromethane	74-87-3	ug/kg	5	120,000	500,000	1,700	8,400	--	--	1,700	NO	51	129	51	129	30
SW 8260B or C	cis-1,2-Dichloroethene	156-59-2	ug/kg	5	160,000	2,000,000	780,000	10,000,000	--	--	160,000	NO	67	125	67	125	30
SW 8260B or C	cis-1,3-Dichloropropene	10061-01-5	ug/kg	5	--	--	--	--	--	--	--	NO	72	126	72	126	30
SW 8260B or C	Dibromochloromethane	124-48-1	ug/kg	5	680	3,300	5,800	21,000	--	--	0,680	NO	66	130	66	130	30
SW 8260B or C	Dibromomethane	74-95-3	ug/kg	5	25,000	110,000	780,000	10,000,000	--	--	25,000	NO	73	128	73	128	30
SW 8260B or C	Dichlorodifluoromethane	75-71-8	ug/kg	5	94,000	400,000	190,000	780,000	--	--	94,000	NO	34	136	34	136	30
SW 8260B or C	Ethylbenzene	100-41-4	ug/kg	5	5,400	27,000	5,700	29,000	--	--	5,400	NO	74	127	74	127	30
SW 8260B or C	Hexachlorobutadiene	87-68-3	ug/kg	5	6,200	22,000	6,200	22,000	--	--	6,200	NO	53	142	53	142	30
SW 8260B or C	Isopropylbenzene (Cumene)	98-82-8	ug/kg	5	2,100,000	11,000,000	2,200,000	11,000,000	--	--	2,100,000	NO	77	129	77	129	30
SW 8260B or C	Methylene Chloride	75-09-2	ug/kg	5	56,000	960,000	1,100	5,400	--	--	1,100	NO	63	137	63	137	30
SW 8260B or C	Naphthalene	91-20-3	ug/kg	5	3,600	18,000	3,900	20,000	--	--	3,600	NO	51	135	51	135	30
SW 8260B or C	n-Butylbenzene	104-51-8	ug/kg	5	3,900,000	51,000,000	--	--	--	--	3,900,000	NO	65	138	65	138	30
SW 8260B or C	n-Propylbenzene	103-65-1	ug/kg	5	3,400,000	21,000,000	--	--	--	--	3,400,000	NO	63	135	63	135	30
SW 8260B or C	sec-Butylbenzene	135-98-8	ug/kg	5	--	--	--	--	--	--	--	NO	63	132	63	132	30
SW 8260B or C	Styrene	100-42-5	ug/kg	5	6,300,000	36,000,000	6,500,000	38,000,000	--	--	6,300,000	NO	74	128	74	128	30
SW 8260B or C	tert-Butyl Methyl Ether (MTBE)	1634-04-4	ug/kg	20	43,000	220,000	39,000	190,000	--	--	39,000	NO	50	135	50	135	30

TABLE 4-1
Reporting Limits, Accuracy, and Precession Limits for Soil
PG&E Program Quality Assurance Project Plan Addendum

Method	Constituent	CAS	Units	QAPP RL[1]	EPA Regional Screening Levels - May 2012		EPA Regional Screening Levels - 2008		DTSC CHHSL		Most Stringent Screening Level[2]	Does RL Exceed Screening Level?	LCS Accuracy Control Limits (%R)		MS/MSD Accuracy Control Limits (%R)		Precision Soil
					Residential	Commercial	Residential	Commercial	Residential	Commercial			Lower Limit	Upper Limit	Lower Limit	Upper Limit	% RPD
SW 8260B or C	tert-Butylbenzene	98-06-6	ug/kg	5	--	--	--	--	--	--	--	NO	65	132	65	132	30
SW 8260B or C	Tetrachloroethene	127-18-4	ug/kg	5	22,000	110,000	570	2,700	--	--	570	NO	67	139	67	139	30
SW 8260B or C	Toluene	108-88-3	ug/kg	5	5,000,000	45,000,000	5,000,000	46,000,000	--	--	5,000,000	NO	71	127	71	127	30
SW 8260B or C	trans-1,2-Dichloroethene	156-60-5	ug/kg	5	150,000	690,000	110,000	500,000	--	--	110,000	NO	66	134	66	134	30
SW 8260B or C	trans-1,3-Dichloropropene	10061-02-6	ug/kg	5	--	--	--	--	--	--	--	NO	65	127	65	127	30
SW 8260B or C	Trichloroethene	79-01-6	ug/kg	5	910	6,400	2,800	14,000	--	--	0,910	NO	77	124	77	124	30
SW 8260B or C	Trichlorofluoromethane (Freon 11)	75-69-4	ug/kg	5	790,000	3,400,000	800,000	3,400,000	--	--	790,000	NO	49	139	49	139	30
SW 8260B or C	Vinyl Chloride	75-01-4	ug/kg	5	60	1,700	60	1,700	--	--	60	NO	58	126	58	126	30
SW 8260B or C	Xylenes, Total	1330-20-7	ug/kg	15	630,000	2,700,000	600,000	2,600,000	--	--	600,000	NO	65	125	65	125	50
SW 8260B or C	m-Xylene	108-38-3	ug/kg	10	590,000	2,500,000	4,500,000	19,000,000	--	--	590,000	NO	79	126	79	126	30
SW 8260B or C	p-Xylene	106-42-3	ug/kg	10	600,000	2,600,000	4,700,000	20,000,000	--	--	600,000	NO	79	126	79	126	30
SW 8260B or C	o-Xylene	95-47-6	ug/kg	5	690,000	3,000,000	5,300,000	23,000,000	--	--	690,000	NO	77	125	77	125	30
SW 8270C or D	1,2,4-Trichlorobenzene	120-82-1	ug/kg	330	22,000	99,000	87,000	400,000	--	--	22,000	NO	44	125	44	125	30
SW 8270C or D	1,2-Dichlorobenzene	95-50-1	ug/kg	330	1,900,000	9,800,000	2,000,000	10,000,000	--	--	1,900,000	NO	45	125	45	125	30
SW 8270C or D	1,3-Dichlorobenzene	541-73-1	ug/kg	330	--	--	--	--	--	--	--	NO	39	125	39	125	30
SW 8270C or D	1,4-Dichlorobenzene	106-46-7	ug/kg	330	2,400	12,000	2,600	13,000	--	--	2,400	NO	35	125	35	125	30
SW 8270C or D	2,4,5-Trichlorophenol	95-95-4	ug/kg	700	6,100,000	62,000,000	6,100,000	62,000,000	--	--	6,100,000	NO	49	125	49	125	30
SW 8270C or D	2,4,6-Trichlorophenol	88-06-2	ug/kg	330	44,000	160,000	44,000	160,000	--	--	44,000	NO	43	125	43	125	30
SW 8270C or D	2,4-Dichlorophenol	120-83-2	ug/kg	330	180,000	1,800,000	180,000	1,800,000	--	--	180,000	NO	45	125	45	125	30
SW 8270C or D	2,4-Dimethylphenol	105-67-9	ug/kg	330	1,200,000	12,000,000	1,200,000	12,000,000	--	--	1,200,000	NO	32	125	32	125	30
SW 8270C or D	2,4-Dinitrophenol	51-28-5	ug/kg	700	120,000	1,200,000	120,000	1,200,000	--	--	120,000	NO	25	132	25	132	30
SW 8270C or D	2,4-Dinitrotoluene	121-14-2	ug/kg	330	1,600	5,500	120,000	1,200,000	--	--	1,600	NO	48	125	48	125	30
SW 8270C or D	2,6-Dinitrotoluene	606-20-2	ug/kg	330	61,000	620,000	61,000	620,000	--	--	61,000	NO	48	125	48	125	30
SW 8270C or D	2-Chloronaphthalene	91-58-7	ug/kg	330	6,300,000	82,000,000	6,300,000	82,000,000	--	--	6,300,000	NO	45	125	45	125	30
SW 8270C or D	2-Chlorophenol	95-57-8	ug/kg	330	390,000	5,100,000	390,000	5,100,000	--	--	390,000	NO	44	125	44	125	30
SW 8270C or D	2-Methylnaphthalene	91-57-6	ug/kg	330	230,000	2,200,000	310,000	4,100,000	--	--	230,000	NO	47	125	47	125	30
SW 8270C or D	2-Methylphenol (o-Cresol)	95-48-7	ug/kg	330	3,100,000	31,000,000	3,100,000	31,000,000	--	--	3,100,000	NO	40	125	40	125	30
SW 8270C or D	2-Nitroaniline	88-74-4	ug/kg	700	610,000	6,000,000	--	--	--	--	610,000	NO	44	125	44	125	30
SW 8270C or D	2-Nitrophenol	88-75-5	ug/kg	700	--	--	--	--	--	--	--	NO	42	125	42	125	30
SW 8270C or D	3,3'-Dichlorobenzidine	91-94-1	ug/kg	1,300	1,100	3,800	1,100	3,800	--	--	1,100	YES	25	128	25	128	30
SW 8270C or D	3-Nitroaniline	99-09-2	ug/kg	700	--	--	18,000	82,000	--	--	18,000	NO	27	125	27	125	30
SW 8270C or D	4,6-Dinitro-2-methylphenol	534-52-1	ug/kg	1600	4,900	49,000	6,100	62,000	--	--	4,900	NO	29	137	29	137	30
SW 8270C or D	4-Bromophenyl phenyl ether	101-55-3	ug/kg	330	--	--	--	--	--	--	--	NO	46	125	46	125	30
SW 8270C or D	4-Chloro-3-methylphenol	59-50-7	ug/kg	600	6,100,000	62,000,000	--	--	--	--	6,100,000	NO	46	125	46	125	30
SW 8270C or D	4-Chloroaniline	106-47-8	ug/kg	700	2,400	8,600	9,000	32,000	--	--	2,400	NO	10	125	10	125	30
SW 8270C or D	4-Chlorophenyl phenyl ether	7005-72-3	ug/kg	330	--	--	--	--	--	--	--	NO	47	125	47	125	30
SW 8270C or D	4-Methylphenol (p-Cresol)	106-44-5	ug/kg	330	6,100,000	62,000,000	310,000	3,100,000	--	--	310,000	NO	41	125	41	125	30
SW 8270C or D	4-Nitroaniline	100-01-6	ug/kg	700	24,000	86,000	23,000	82,000	--	--	23,000	NO	34	125	34	125	30
SW 8270C or D	4-Nitrophenol	100-02-7	ug/kg	700	--	--	--	--	--	--	--	NO	25	138	25	138	30
SW 8270C or D	Acenaphthene	83-32-9	ug/kg	330	3,400,000	33,000,000	3,400,000	33,000,000	--	--	3,400,000	NO	46	125	46	125	30
SW 8270C or D	Acenaphthylene	208-96-8	ug/kg	330	--	--	--	--	--	--	--	NO	44	125	44	125	30
SW 8270C or D	Anthracene	120-12-7	ug/kg	330	17,000,000	170,000,000	17,000,000	170,000,000	--	--	17,000,000	NO	53	125	53	125	30
SW 8270C or D	Benzo (a) anthracene	56-55-3	ug/kg	330	150	2,100	150	2,100	--	--	150	YES	52	125	52	125	30
SW 8270C or D	Benzo (a) pyrene	50-32-8	ug/kg	330	15	210	15	210	38	130	15	YES	50	125	50	125	30
SW 8270C or D	Benzo (b) fluoranthene	205-99-2	ug/kg	330	150	2,100	150	2,100	--	--	150	YES	45	125	45	125	30
SW 8270C or D	Benzo (g,h,i) perylene	191-24-2	ug/kg	330	--	--	--	--	--	--	--	NO	38	126	38	126	30
SW 8270C or D	Benzo (k) fluoranthene	207-08-9	ug/kg	330	1,500	21,000	1,500	21,000	--	--	1,500	NO	45	125	45	125	30
SW 8270C or D	Benzoic acid	65-85-0	ug/kg	5,000	240,000,000	2,500,000,000	240,000,000	2,500,000,000	--	--	240,000,000	NO	25	125	25	125	30
SW 8270C or D	Benzyl alcohol	100-51-6	ug/kg	330	6,100,000	62,000,000	31,000,000	310,000,000	--	--	6,100,000	NO	25	125	25	125	30
SW 8270C or D	bis (2-chloroethoxy) methane	111-91-1	ug/kg	330	180,000	1,800,000	180,000	1,800,000	--	--	180,000	NO	43	125	43	125	30
SW 8270C or D	bis (2-chloroethyl) ether	111-44-4	ug/kg	330	210	1,000	190	900	--	--	190	YES	38	125	38	125	30
SW 8270C or D	bis (2-chloroisopropyl) ether	108-60-1	ug/kg	330	4,600	22,000	3,500	17,000	--	--	3,500	NO	25	125	25	125	30
SW 8270C or D	bis (2-ethylhexyl) phthalate	117-81-7	ug/kg	330	35,000	120,000	35,000	120,000	--	--	35,000	NO	47	127	47	127	30
SW 8270C or D	Butyl benzylphthalate	85-68-7	ug/kg	1000	260,000	910,000	260,000	910,000	--	--	260,000	NO	49	125	49	125	30
SW 8270C or D	Chrysene	218-01-9	ug/kg	330	15,000	210,000	15,000	210,000	--	--	15,000	NO	53	125	53	125	30
SW 8270C or D	Dibenzo (a,h) anthracene	53-70-3	ug/kg	330	15	210	15	210	--	--	15	YES	41	125	41	125	30
SW 8270C or D	Dibenzofuran	132-64-9	ug/kg	330	78,000	1,000,000	--	--	--	--	78,000	NO	51	125	51	125	30
SW 8270C or D	Diethyl phthalate	84-66-2	ug/kg	330	49,000,000	490,000,000	49,000,000	490,000,000	--	--	49,000,000	NO	50	125	50	125	30
SW 8270C or D	Dimethyl phthalate	131-11-3	ug/kg	330	--	--	--	--	--	--	--	NO	49	125	49	125	30
SW 8270C or D	Di-n-butylphthalate	84-74-2	ug/kg	330	6,100,000	62,000,000	6,100,000	62,000,000	--	--	6,100,000	NO	56	125	56	125	30
SW 8270C or D	Di-n-octylphthalate	117-84-0	ug/kg	1000	--	--	--	--	--	--	--	NO	41	132	41	132	30
SW 8270C or D	Fluoranthene	206-44-0	ug/kg	330	2,300,000	22,000,000	2,300,000	22,000,000	--	--	2,300,000	NO	54	125	54	125	30
SW 8270C or D	Fluorene	86-73-7	ug/kg	330	2,300,000	22,000,000	2,300,000	22,000,000	--	--	2,300,000	NO	49	125	49	125	30
SW 8270C or D	Hexachlorobenzene	118-74-1	ug/kg	330	300	1,100	300	1,100	--	--	300	YES	47	125	47	125	30
SW 8270C or D	Hexachlorobutadiene	87-68-3	ug/kg	330	6,200	22,000	6,200	22,000	--	--	6,200	NO	40	125	40	125	30
SW 8270C or D	Hexachloroethane	67-72-1	ug/kg	330	12,000	43,000	35,000	120,000	--	--	12,000	NO	34	125	34	125	30

TABLE 4-1
Reporting Limits, Accuracy, and Precession Limits for Soil
PG&E Program Quality Assurance Project Plan Addendum

Method	Constituent	CAS	Units	QAPP RL[1]	EPA Regional Screening Levels - May 2012		EPA Regional Screening Levels - 2008		DTSC CHHSL		Most Stringent Screening Level[2]	Does RL Exceed Screening Level?	LCS Accuracy Control Limits (%R)		MS/MSD Accuracy Control Limits (%R)		Precision Soil
					Residential	Commercial	Residential	Commercial	Residential	Commercial			Lower Limit	Upper Limit	Lower Limit	Upper Limit	% RPD
SW 8270C or D	Indeno (1,2,3-c,d) pyrene	193-39-5	ug/kg	330	150	2,100	150	2,100	--	--	150	YES	38	125	38	125	30
SW 8270C or D	Isophorone	78-59-1	ug/kg	330	510,000	1,800,000	510,000	1,800,000	--	--	510,000	NO	43	125	43	125	30
SW 8270C or D	Naphthalene	91-20-3	ug/kg	330	3,600	18,000	3,900	20,000	--	--	3,600	NO	40	125	40	125	30
SW 8270C or D	Nitrobenzene	98-95-3	ug/kg	330	4,800	24,000	31,000	280,000	--	--	4,800	NO	41	125	41	125	30
SW 8270C or D	n-Nitrosodi-n-propylamine	621-64-7	ug/kg	330	69	250	69	250	--	--	69	YES	40	125	40	125	30
SW 8270C or D	n-Nitrosodiphenylamine	86-30-6	ug/kg	330	99,000	350,000	99,000	350,000	--	--	99,000	NO	49	125	49	125	30
SW 8270C or D	Pentachlorophenol	87-86-5	ug/kg	700	890	2,700	3,000	9,000	4,400	13,000	0,890	NO	25	125	25	125	30
SW 8270C or D	Phenanthrene	85-01-8	ug/kg	330	--	--	--	--	--	--	--	NO	50	125	50	125	30
SW 8270C or D	Phenol	108-95-2	ug/kg	330	18,000,000	180,000,000	18,000,000	180,000,000	--	--	18,000,000	NO	39	125	39	125	30
SW 8270C or D	Pyrene	129-00-0	ug/kg	330	1,700,000	17,000,000	1,700,000	17,000,000	--	--	1,700,000	NO	46	125	46	125	30
SW 8270SIM	1-methylnaphthalene	90-12-0	ug/kg	5	16,000	53,000	22,000	99,000	--	--	16,000	NO	30	111	30	111	30
SW 8270SIM	2-methylnaphthalene	91-57-6	ug/kg	5	230,000	2,200,000	310,000	4,100,000	--	--	230,000	NO	30	111	30	111	30
SW 8270SIM	Acenaphthene	83-32-9	ug/kg	5	3,400,000	33,000,000	3,400,000	33,000,000	--	--	3,400,000	NO	28	110	28	110	30
SW 8270SIM	Acenaphthylene	208-96-8	ug/kg	5	--	--	--	--	--	--	--	NO	23	126	23	126	30
SW 8270SIM	Anthracene	120-12-7	ug/kg	5	17,000,000	170,000,000	17,000,000	170,000,000	--	--	17,000,000	NO	28	136	28	136	30
SW 8270SIM	Benzo (a) anthracene	56-55-3	ug/kg	5	150	2,100	150	2,100	--	--	150	NO	31	146	31	146	30
SW 8270SIM	Benzo (a) pyrene	50-32-8	ug/kg	5	15	210	15	210	38	130	15	NO	28	128	28	128	30
SW 8270SIM	Benzo (b) fluoranthene	205-99-2	ug/kg	5	150	2,100	150	2,100	--	--	150	NO	30	139	30	139	30
SW 8270SIM	Benzo (g,h,i) perylene	191-24-2	ug/kg	5	--	--	--	--	--	--	--	NO	21	149	21	149	30
SW 8270SIM	Benzo (k) fluoranthene	207-08-9	ug/kg	5	1,500	21,000	1,500	21,000	--	--	1,500	NO	42	129	42	129	30
SW 8270SIM	Chrysene	218-01-9	ug/kg	5	15,000	210,000	15,000	210,000	--	--	15,000	NO	39	134	39	134	30
SW 8270SIM	Dibenzo (a,h) anthracene	53-70-3	ug/kg	5	15	210	15	210	--	--	15	NO	30	138	30	138	30
SW 8270SIM	Fluoranthene	206-44-0	ug/kg	5	2,300,000	22,000,000	2,300,000	22,000,000	--	--	2,300,000	NO	30	142	30	142	30
SW 8270SIM	Fluorene	86-73-7	ug/kg	5	2,300,000	22,000,000	2,300,000	22,000,000	--	--	2,300,000	NO	27	116	27	116	30
SW 8270SIM	Indeno (1,2,3-c,d) pyrene	193-39-5	ug/kg	5	150	2,100	150	2,100	--	--	150	NO	17	164	17	164	30
SW 8270SIM	Naphthalene	91-20-3	ug/kg	5	3,600	18,000	3,900	20,000	--	--	3,600	NO	29	106	29	106	30
SW 8270SIM	Phenanthrene	85-01-8	ug/kg	5	--	--	--	--	--	--	--	NO	32	127	32	127	30
SW 8270SIM	Pyrene	129-00-0	ug/kg	5	1,700,000	17,000,000	1,700,000	17,000,000	--	--	1,700,000	NO	28	130	28	130	30

Notes:

Please keep in mind, Screening Levels are constantly revised by the EPA. The appropriate Screening levels are specific to the project, the location, the agency providing oversight, and the overall Goals of the project.

mg/kg = milligrams per kilogram
ug/kg = micrograms per kilogram
µmhos/cm = micromhos per centimeter

All soil results (with the exception of Waste characterization) must be reported as dry weight
SW 7199 soil analysis must be accompanied by a SW 3060A extraction
PCB - LCS, MS, and MSD only require Aroclor-1016 and Aroclor-1260 spikes

[1] Screening levels are established by use of statistical analysis and are not based on the analytical capabilities of labortories or methods. The 0.4 mg/kg RL used for hexavalent chromium for this project is currently the lowest RL achievable using SW7199/3060A and is well below the industrial soil screening level.
[2] For soil, most stringent of:
EPA Regional Screening Levels - 2008 and May 2012
CHHSL = California Human Health Screening Levels, January 2005
DTSC = California Department of Toxic Substance Control, January 2005

TABLE 4-2
Reporting Limits, Accuracy, and Precession Limits for Groundwater
PG&E Program Quality Assurance Project Plan Addendum

Method	Constituent	CAS	Units	QAPP RL	EPA Regional Screening Levels May 2012	EPA Regional Screening Levels 2008	Federal Drinking Water Standards MCLs	California Drinking Water Standards MCLs	Most Stringent Screening Level[1]	Does RL Exceed Screening Level?	Does RL Exceed Federal MCL Level?	Does RL Exceed California MCL Level?	LCS Accuracy Control Limits (%R) Lower Limit	LCS Accuracy Control Limits (%R) Upper Limit	MS/MSD Accuracy Control Limits (%R) Lower Limit	MS/MSD Accuracy Control Limits (%R) Upper Limit	Precision Water % RPD
EPA 300.0M	Acetate	64-19-7	mg/L	0.1	--	--	--	--	--	NO	NO	NO	75	125	75	125	20
SM 2320 B	Alkalinity	Alkalinity	mg/L	5	--	--	--	--	--	NO	NO	NO	85	115	75	125	20
SM 4500-NH3 B, C, D, E, or G	Ammonia (as N)	7664-41-7	mg/L	0.5	--	--	--	--	--	NO	NO	NO	85	115	75	125	20
SM 2320 B	Bicarbonate	Bicarbonate	mg/L	5	--	--	--	--	--	NO	NO	NO	85	115	75	125	20
SM 5210 B	BOD	BOD	mg/L	--	--	--	--	--	--	NO	NO	NO	--	--	--	--	10
EPA 300.0	Bromide	Bromide	mg/L	0.5	--	--	--	--	--	NO	NO	NO	90	110	80	120	20
EPA 300.0M	Butyrate	107-92-6	mg/L	0.1	--	--	--	--	--	NO	NO	NO	75	125	75	125	20
SM 4500-CO_2	Carbon dioxide	124-38-9	mg/L	5	--	--	--	--	--	NO	NO	NO	--	--	--	--	20
SM 2320 B	Carbonate	Carbonate	mg/L	5	--	--	--	--	--	NO	NO	NO	85	115	75	125	20
EPA 300.0/SM 4500-Cl B, C, E, or D	Chloride	Chloride	mg/L	0.5	--	--	--	--	--	NO	NO	NO	90	110	80	120	20
SM 2120 E	Color	Color	Color unit	1	--	--	--	--	--	NO	NO	NO	90	110	90	110	20
SM 4500-CN	Cyanide	57-12-5	mg/L	0.01	0.00014		0.2	0.15	0.00014	YES	NO	NO	85	115	75	125	20
EPA 300.0/SM 4500-F B, C, D, or E	Fluoride	Fluoride	mg/L	0.5	--	2.2	4	--	2.2	NO	NO	NO	90	110	80	120	20
SM 2340 B or C	Hardness	Hardness	mg/L	2	--	--	--	--	--	NO	NO	NO	75	125	75	125	20
SM 2320 B	Hydroxide alkalinity	Hydroxide	mg/L	5	--	--	--	--	--	NO	NO	NO	85	115	75	125	20
EPA 300.0M	Lactate	50-21-5	mg/L	0.1	--	--	--	--	--	NO	NO	NO	75	125	75	125	20
EPA 300.0	Nitrate (as N)	14797-55-8	mg/L	0.5	25	58	10	--	10	NO	NO	NO	90	110	80	120	20
EPA 353.2/SM 4500-NO3 E, F or H	Nitrate/nitrite (as N)	NO3NO2N	mg/L	0.5	--	--	--	--	--	NO	NO	NO	85	115	75	125	20
EPA 300.0/SM 4500-NO2 B, F or E	Nitrite (as N)	14797-65-8	mg/L	0.5	--	3.7	1	--	1	NO	NO	NO	90	110	80	120	20
SM 5310 B, C, or D	Organic carbon	DOC/TOC	mg/L	0.3	--	--	--	--	--	NO	NO	NO	85	115	75	125	10
EPA 300.0/SM 4500-P E or F	Ortho phosphate	Ortho Phosphate	mg/L	0.02	--	--	--	--	--	NO	NO	NO	90	110	80	120	20
EPA 314.0	Perchlorate	Perchlorate	µg/L	4	--	26	--	--	26	NO	NO	NO	85	115	85	115	20
SM 4500-H+ B SW 9040	pH	pH	pH units	0.1	--	--	--	--	--	NO	NO	NO	--	--	--	--	20
EPA 300.0M	Propionate	79-09-4	mg/L	0.1	--	--	--	--	--	NO	NO	NO	75	125	75	125	20
EPA 300.0M	Pyruvate	127-17-3	mg/L	0.1	--	--	--	--	--	NO	NO	NO	75	125	75	125	20
SM 4500-SiO_2 E	Reactive silica	7631-86-9	mg/L	1	--	--	--	--	--	NO	NO	NO	75	125	75	125	20
SM 4500-SiO_2 C	Silica	7631-86-9	mg/L	0.04	--	--	--	--	--	NO	NO	NO	75	125	75	125	20
SILICA_CALC	Soluble silica	7631-86-9	mg/L	0.04	--	--	--	--	--	NO	NO	NO	75	125	75	125	20
EPA 120.1/SW 9050	Specific conductance	Conductance	µmhos/cm	2	--	--	--	--	--	NO	NO	NO	85	115	75	125	20
EPA 300.0/SM 4110 B	Sulfate	Sulfate	mg/L	0.5	--	--	--	--	--	NO	NO	NO	90	110	80	120	20
SM 4500-S^{-2} F, E, D, or G	Sulfide	Sulfide	mg/L	0.05	--	--	--	--	--	NO	NO	NO	75	125	75	125	20
SM 2540 C	Total dissolved solids	TDS	mg/L	10	--	--	--	--	--	NO	NO	NO	75	125	--	--	10
SM 4500-N_{org} B or C	Total kjeldahl nitrogen	7727-37-9	mg/L	--	--	--	--	--	--	NO	NO	NO	90	110	75	125	20
EPA 365.1/EPA 365.3 SM 4500-P E or F	Total phosphorous	Total Phosphorous	mg/L	0.02	--	--	--	--	--	NO	NO	NO	75	125	75	125	20
SM 2540 D	Total suspended solids	TSS	mg/L	4	--	--	--	--	--	NO	NO	NO	75	125	75	125	10
EPA 180.1/SM 2130 B	Turbidity	TURB	NTU	0.1	--	--	--	--	--	NO	NO	NO	--	--	--	--	20
SW 6020A/EPA 200.8	Aluminum	7429-90-5	ug/L	50	16,000	37,000	50*	1,000	50	NO	NO	NO	85	115	75	125	20
SW 6020A/EPA 200.8	Antimony	7440-36-0	ug/L	2	6	15	6	--	6	NO	NO	NO	85	115	75	125	20
SW 6020A/EPA 200.8	Arsenic	7440-38-2	ug/L	0.5 (0.1)	0.045	0.045	10	--	0.045	YES	NO	NO	85	115	75	125	20
SW 6020A/EPA 200.8	Barium	7440-39-3	ug/L	2	2,900	7,300	2,000	1,000	1,000	NO	NO	NO	85	115	75	125	20
SW 6020A/EPA 200.8	Beryllium	7440-41-7	ug/L	0.5	16	73	4	--	4	NO	NO	NO	85	115	75	125	20
SW 6010B or C/SW 6020A/EPA 200.7/EPA 200.8	Boron	7440-42-8	ug/L	50	?	?	?	?	?	?	NO	NO	85	115	75	125	20
SW 6020A/EPA 200.8	Cadmium	7440-43-9	ug/L	1	--	18	5	--	5	NO	NO	NO	85	115	75	125	20
SW 6010B/EPA 200.7	Calcium	7440-70-2	ug/L	100	--	--	--	--	--	NO	NO	NO	85	115	75	125	20
SW 6020A/EPA 200.8	Chromium	7440-47-3	ug/L	1	--	--	100	50	50	NO	NO	NO	85	115	75	125	20
EPA 218.6	Chromium, Hexavalent	18540-29-9	ug/L	0.2	0.031	110	100	--	0.031	YES	NO	NO	90	110	90	110	20
EPA 218.6 LL	Chromium, Hexavalent, LL	18540-29-9	ug/L	0.06	0.031	110	100	--	0.031	YES	NO	NO	90	110	90	110	20
SM 3500-Cr	Chromium, Hexavalent	18540-29-9	ug/L	10	0.031	110	100	--	0.031	YES	NO	NO	85	115	80	120	20
SW 6010B or C/SW 6020A/EPA 200.7/EPA 200.8	Cobalt	7440-48-4	ug/L	5	4.7	11	--	--	4.7	YES	NO	NO	85	115	75	125	20
SW 6010B or C/SW 6020A/EPA 200.7/EPA 200.8	Copper	7440-50-8	ug/L	1	620	1,500	1,000*	--	620	NO	NO	NO	85	115	75	125	20
SW 6010B or C/EPA 200.7	Iron	7439-89-6	ug/L	20	11,000	26,000	300*	--	300	NO	NO	NO	85	115	75	125	20
SW 6010B or C/SW 6020A/EPA 200.7/EPA 200.8	Lead	7439-92-1	ug/L	1	--	--	15	--	15	NO	NO	NO	85	115	75	125	20
SW 6010B or C/EPA 200.7	Magnesium	7439-95-4	ug/L	100	--	--	--	--	--	NO	NO	NO	85	115	75	125	20
SW 6020A/EPA 200.8	Manganese	7439-96-5	ug/L	0.5	--	880	50*	--	50	NO	NO	NO	85	115	75	125	20
SW 7070A/EPA 245.1/ EPA 6020A	Mercury	7439-97-6	ug/L	0.2	0.63	0.63	2	--	0.63	NO	NO	NO	75	125	75	125	20
SW 6020A/EPA 200.8	Molybdenum	7439-98-7	ug/L	2	78	180	--	--	78	NO	NO	NO	85	115	75	125	20
SW 6020A/EPA 200.8	Nickel	7440-02-0	ug/L	2	300	730	100*	100	100	NO	NO	NO	85	115	75	125	20
SW 6010B or C/EPA 200.7	Potassium	7440-09-7	ug/L	100	--	--	--	--	--	NO	NO	NO	85	115	75	125	20
SW 6020A/EPA 200.8	Selenium	7782-49-2	ug/L	5	78	180	50	--	50	NO	NO	NO	85	115	75	125	20
SW 6020A/EPA 200.8	Silver	7440-22-4	ug/L	5	71	180	--	--	71	NO	NO	NO	85	115	75	125	20
SW 6010B or C/EPA 200.7	Sodium	7440-23-5	ug/L	100	--	--	--	--	--	NO	NO	NO	85	115	75	125	20
EPA 200.7/EPA 200.8	Strontium	7440-24-6	ug/L	50	9,300	22,000	--	--	9,300	NO	NO	NO	85	115	75	125	20
SW 6020A/EPA 200.8	Thallium	7440-28-0	ug/L	1	0.16	2.4	2	--	0.16	YES	NO	NO	85	115	75	125	20
SW 6020A/EPA 200.8	Uranium	7440-61-1	ug/L	5	230	--	30	--	30	NO	NO	NO	85	115	75	125	20
SW 6020A/EPA 200.8	Vanadium	7440-62-2	ug/L	5	--	2.6	--	--	2.6	YES	NO	NO	85	115	75	125	20
SW 6010B or C/SW 6020A/EPA 200.7/EPA 200.8	Zinc	7440-66-6	ug/L	20	4,700	11,000	5,000*	--	4,700	NO	NO	NO	85	115	75	125	20
SW 8015B or C or D	Motor Oil	TPH-motor oil	mg/L	1	--	--	--	--	--	NO	NO	NO	50	150	50	150	30
SW 8015B or C or D	TPH-Diesel	TPH-diesel	mg/L	0.5	--	--	--	--	--	NO	NO	NO	61	143	61	143	30
SW 8015B or C or D	TPH-Gasoline	TPH-gasoline	mg/L	0.1	--	--	--	--	--	NO	NO	NO	67	136	67	136	30
SW 8081A or B	4,4'-DDD	72-54-8	ug/L	0.1	0.28	0.28	--	--	0.28	NO	NO	NO	50	139	50	139	30
SW 8081A or B	4,4'-DDE	72-55-9	ug/L	0.1	0.2	0.2	--	--	0.2	NO	NO	NO	48	137	48	137	30
SW 8081A or B	4,4'-DDT	50-29-3	ug/L	0.1	0.2	0.2	--	--	0.2	NO	NO	NO	47	138	47	138	30
SW 8081A or B	Aldrin	309-00-2	ug/L	0.1	0.00021	0.004	--	--	0.00021	YES	NO	NO	42	138	42	138	30
SW 8081A or B	alpha-HCH	319-84-6	ug/L	0.1	0.0062	0.011	--	--	0.0062	YES	NO	NO	60	128	60	128	30
SW 8081A or B	alpha-Chlordane	5103-71-9	ug/L	0.1	--	--	2	--	2	NO	NO	NO	63	123	63	123	30
SW 8081A or B	beta-HCH	319-85-7	ug/L	0.1	0.022	0.037	--	--	0.022	YES	NO	NO	66	126	66	126	30

TABLE 4-2
Reporting Limits, Accuracy, and Precession Limits for Groundwater
PG&E Program Quality Assurance Project Plan Addendum

Method	Constituent	CAS	Units	QAPP RL	EPA Regional Screening Levels May 2012	EPA Regional Screening Levels 2008	Federal Drinking Water Standards MCLs	California Drinking Water Standards MCLs	Most Stringent Screening Level[1]	Does RL Exceed Screening Level?	Does RL Exceed Federal MCL Level?	Does RL Exceed California MCL Level?	LCS Accuracy Control Limits (%R) Lower Limit	LCS Accuracy Control Limits (%R) Upper Limit	MS/MSD Accuracy Control Limits (%R) Lower Limit	MS/MSD Accuracy Control Limits (%R) Upper Limit	Precision Water % RPD
SW 8081A or B	delta-HCH	319-86-8	ug/L	0.1	--	--	--	--	--	NO	NO	NO	46	136	46	136	30
SW 8081A or B	Dieldrin	60-57-1	ug/L	0.1	0.0015	0.0042	--	--	0.0015	YES	NO	NO	62	129	62	129	30
SW 8081A or B	Endosulfan I	959-98-8	ug/L	0.1	--	--	--	--	--	NO	NO	NO	49	120	49	120	30
SW 8081A or B	Endosulfan II	33213-65-9	ug/L	0.1	--	--	--	--	--	NO	NO	NO	42	130	42	130	30
SW 8081A or B	Endosulfan sulfate	1031-07-8	ug/L	0.1	--	--	--	--	--	NO	NO	NO	54	137	54	137	30
SW 8081A or B	Endrin	72-20-8	ug/L	0.1	1.7	11	2	--	1.7	NO	NO	NO	56	134	56	134	30
SW 8081A or B	Endrin aldehyde	7421-93-4	ug/L	0.1	--	--	--	--	--	NO	NO	NO	56	137	56	137	30
SW 8081A or B	gamma-HCH (lindane)	58-89-9	ug/L	0.1	0.036	0.061	0.2	--	0.036	YES	NO	NO	30	146	30	146	30
SW 8081A or B	gamma-Chlordane	5103-74-2	ug/L	0.1	--	--	2	--	2	NO	NO	NO	67	120	67	120	30
SW 8081A or B	Heptachlor	76-44-8	ug/L	0.1	0.0018	0.015	0.4	--	0.0018	YES	NO	NO	51	128	51	128	30
SW 8081A or B	Heptachlor Epoxide	1024-57-3	ug/L	0.1	0.0033	0.0074	0.2	--	0.0033	YES	NO	NO	62	131	62	131	30
SW 8081A or B	Methoxychlor	72-43-5	ug/L	0.5	27	180	40	--	27	NO	NO	NO	56	150	56	150	30
SW 8081A or B	Toxaphene	8001-35-2	ug/L	1	0.013	0.061	3	--	0.013	YES	NO	NO	41	126	41	126	30
SW 8082 or A	Aroclor-1016	12674-11-2	ug/L	0.5	0.96	0.96	0.5	--	0.5	NO	NO	NO	40	144	40	144	30
SW 8082 or A	Aroclor-1221	11104-28-2	ug/L	0.5	0.0043	0.0068	0.5	--	0.0043	YES	NO	NO	41	136	41	136	30
SW 8082 or A	Aroclor-1232	11141-16-5	ug/L	0.5	0.0043	0.0068	0.5	--	0.0043	YES	NO	NO	41	136	41	136	30
SW 8082 or A	Aroclor-1242	53469-21-9	ug/L	0.5	0.034	0.034	0.5	--	0.034	YES	NO	NO	39	150	39	150	30
SW 8082 or A	Aroclor-1248	12672-29-6	ug/L	0.5	0.034	0.034	0.5	--	0.034	YES	NO	NO	41	136	41	136	30
SW 8082 or A	Aroclor-1254	11097-69-1	ug/L	0.5	0.034	0.034	0.5	--	0.034	YES	NO	NO	29	141	29	141	30
SW 8082 or A	Aroclor-1260	11096-82-5	ug/L	0.5	0.034	0.034	0.5	--	0.034	YES	NO	NO	45	145	45	145	30
SW 8151A	2,4-D	94-75-7	ug/L	10	130	370	70	--	70	NO	NO	NO	39	120	39	120	30
SW 8151A	2,4-DB	94-82-6	ug/L	20	91	290	--	--	91	NO	NO	NO	44	120	44	120	30
SW 8151A	2,4,5-T	93-76-5	ug/L	20	120	370	--	--	120	NO	NO	NO	44	122	44	122	30
SW 8151A	2,4,5-TP	93-72-1	ug/L	10	84	290	--	--	84	NO	NO	NO	49	126	49	126	30
SW 8151A	Dalapon	75-99-0	ug/L	30	470	1,100	200	--	200	NO	NO	NO	40	120	40	120	30
SW 8151A	Dicamba	1918-00-9	ug/L	30	440	1,100	--	--	440	NO	NO	NO	60	120	60	120	30
SW 8151A	Dichloroprop	120-36-5	ug/L	20	--	--	--	--	--	NO	NO	NO	68	122	68	122	30
SW 8151A	Dinoseb	88-85-7	ug/L	3	11	37	7	--	7	NO	NO	NO	28	115	28	115	30
SW 8151A	MCPA	94-74-6	ug/L	100	5.7	18	--	--	5.7	YES	NO	NO	62	144	62	144	30
SW 8151A	MCPP	7085-19-0	ug/L	100	--	37	--	--	37	YES	NO	NO	60	133	60	133	30
SW 8260B or C	1,1,1,2-Tetrachloroethane	630-20-6	ug/L	0.5	0.5	0.52	--	--	0.5	NO	NO	NO	81	129	81	129	20
SW 8260B or C	1,1,1-Trichloroethane (TCA)	71-55-6	ug/L	1	7,500	9,100	200	200	200	NO	NO	NO	67	132	67	132	20
SW 8260B or C	1,1,2,2-Tetrachloroethane	79-34-5	ug/L	0.5	0.066	0.067	--	1	0.066	YES	NO	NO	63	128	63	128	20
SW 8260B or C	1,1,2-Trichloroethane	79-00-5	ug/L	1	0.24	0.24	5	5	0.24	YES	NO	NO	75	125	75	125	20
SW 8260B or C	1,1,2-Trichlorotrifluoroethane (Freon 113)	76-13-1	ug/L	1	53,000	59,000	--	1,200	1,200	NO	NO	NO	75	125	75	125	20
SW 8260B or C	1,1-Dichloroethane	75-34-3	ug/L	1	2.4	2.4	--	5	2.4	NO	NO	NO	69	133	69	133	20
SW 8260B or C	1,1-Dichloroethene	75-35-4	ug/L	1	260	340	7	6	6	NO	NO	NO	68	130	68	130	20
SW 8260B or C	1,1-Dichloropropene	563-58-6	ug/L	1	--	--	--	--	--	NO	NO	NO	73	132	73	132	20
SW 8260B or C	1,2,3-Trichlorobenzene	87-61-6	ug/L	1	5.2	--	--	--	5.2	NO	NO	NO	67	137	67	137	20
SW 8260B or C	1,2,3-Trichloropropane	96-18-4	ug/L	1	0.00065	0.0096	--	--	0.00065	YES	NO	NO	73	124	73	124	20
SW 8260B or C	1,2,4-Trichlorobenzene	120-82-1	ug/L	1	0.99	8.2	70	5	0.99	YES	NO	NO	66	134	66	134	20
SW 8260B or C	1,2,4-Trimethylbenzene	95-63-6	ug/L	1	15	15	--	--	15	NO	NO	NO	74	132	74	132	20
SW 8260B or C	1,2-Dibromo-3-Chloropropane	96-12-8	ug/L	2	0.00032	0.00032	0.2	--	0.00032	YES	YES	NO	50	132	50	132	20
SW 8260B or C	1,2-Dibromoethane (EDB)	106-93-4	ug/L	1	0.0065	0.0065	0.05	--	0.0065	YES	YES	NO	80	121	80	121	20
SW 8260B or C	1,2-Dichlorobenzene	95-50-1	ug/L	1	280	370	600	600	280	NO	NO	NO	71	122	71	122	20
SW 8260B or C	1,2-Dichloroethane (EDC)	107-06-2	ug/L	0.5	0.15	0.15	5	0.5	0.15	YES	NO	NO	69	132	69	132	20
SW 8260B or C	1,2-Dichloropropane	78-87-5	ug/L	1	0.38	0.39	5	5	0.38	YES	NO	NO	75	125	75	125	20
SW 8260B or C	1,3,5-Trimethylbenzene	108-67-8	ug/L	1	87	12	--	--	12	NO	NO	NO	74	131	74	131	20
SW 8260B or C	1,3-Dichlorobenzene	541-73-1	ug/L	1	--	--	--	--	--	NO	NO	NO	75	124	75	124	20
SW 8260B or C	1,3-Dichloropropane	142-28-9	ug/L	1	290	730	--	--	290	NO	NO	NO	73	126	73	126	20
SW 8260B or C	1,4-Dichlorobenzene	106-46-7	ug/L	0.5	0.42	0.43	75	5	0.42	YES	NO	NO	74	123	74	123	20
SW 8260B or C	2,2-Dichloropropane	594-20-7	ug/L	1	--	--	--	--	--	NO	NO	NO	69	137	69	137	20
SW 8260B or C	2-Butanone (MEK)	78-93-3	ug/L	10	4,900	7,100	--	--	4,900	NO	NO	NO	49	136	49	136	20
SW 8260B or C	2-Chlorotoluene	95-49-8	ug/L	1	180	730	--	--	180	NO	NO	NO	73	126	73	126	20
SW 8260B or C	4-Chlorotoluene	106-43-4	ug/L	1	190	2,600	--	--	190	NO	NO	NO	74	128	74	128	20
SW 8260B or C	4-Isopropyltoluene	99-87-6	ug/L	1	--	--	--	--	--	NO	NO	NO	73	130	73	130	20
SW 8260B or C	4-Methyl-2-Pentanone	108-10-1	ug/L	10	1,000	2,000	--	--	1,000	NO	NO	NO	58	134	58	134	20
SW 8260B or C	Acetone	67-64-1	ug/L	10	12,000	22,000	--	--	12,000	NO	NO	NO	40	135	40	135	20
SW 8260B or C	Acrolein	107-02-8	ug/L	20	0.041	0.042	--	--	0.041	YES	NO	NO	75	125	75	125	20
SW 8260B or C	Acrylonitrile	107-13-1	ug/L	20	0.045	0.045	--	--	0.045	YES	NO	NO	75	125	75	125	20
SW 8260B or C	Benzene	71-43-2	ug/L	0.4	0.39	0.41	5	1	0.39	YES	NO	NO	81	122	81	122	20
SW 8260B or C	Bromobenzene	108-86-1	ug/L	1	54	20	--	--	20	NO	NO	NO	76	124	76	124	20
SW 8260B or C	Bromochloromethane	74-97-5	ug/L	1	83	--	--	--	83	NO	NO	NO	65	129	65	129	20
SW 8260B or C	Bromodichloromethane	75-27-4	ug/L	0.5	0.12	1.1	100	--	0.12	YES	NO	NO	76	121	76	121	20
SW 8260B or C	Bromoform	75-25-2	ug/L	1	7.9	8.5	100	--	7.9	NO	NO	NO	69	128	69	128	20
SW 8260B or C	Bromomethane	74-83-9	ug/L	3	7	8.7	--	--	7	NO	NO	NO	53	141	53	141	20
SW 8260B or C	Carbon Disulfide	75-15-0	ug/L	1	720	1,000	--	--	720	NO	NO	NO	75	125	75	125	20
SW 8260B or C	Carbon Tetrachloride	56-23-5	ug/L	0.5	0.39	0.2	5	0.5	0.2	YES	NO	NO	66	138	66	138	20
SW 8260B or C	Chlorobenzene	108-90-7	ug/L	0.5	72	91	100	--	72	NO	NO	NO	81	122	81	122	20
SW 8260B or C	Chloroethane	75-00-3	ug/L	1	21,000	21,000	--	--	21,000	NO	NO	NO	58	133	58	133	20
SW 8260B or C	Chloroform	67-66-3	ug/L	1	0.19	0.19	100	--	0.19	YES	NO	NO	69	128	69	128	20
SW 8260B or C	Chloromethane	74-87-3	ug/L	1	190	1.8	--	--	1.8	NO	NO	NO	56	131	56	131	20
SW 8260B or C	cis-1,2-Dichloroethene	156-59-2	ug/L	1	28	370	70	6	6	NO	NO	NO	72	126	72	126	20
SW 8260B or C	cis-1,3-Dichloropropene	10061-01-5	ug/L	0.5	--	--	--	--	--	NO	NO	NO	69	131	69	131	20
SW 8260B or C	Dibromochloromethane	124-48-1	ug/L	0.5	0.15	0.8	100	--	0.15	YES	NO	NO	66	133	66	133	20
SW 8260B or C	Dibromomethane	74-95-3	ug/L	1	7.9	370	--	--	7.9	NO	NO	NO	76	125	76	125	20
SW 8260B or C	Dichlorodifluoromethane (Freon 12)	75-71-8	ug/L	1	190	390	--	--	190	NO	NO	NO	53	153	53	153	20

TABLE 4-2
Reporting Limits, Accuracy, and Precession Limits for Groundwater
PG&E Program Quality Assurance Project Plan Addendum

Method	Constituent	CAS	Units	QAPP RL	EPA Regional Screening Levels May 2012	EPA Regional Screening Levels 2008	Federal Drinking Water Standards MCLs	California Drinking Water Standards MCLs	Most Stringent Screening Level[1]	Does RL Exceed Screening Level?	Does RL Exceed Federal MCL Level?	Does RL Exceed California MCL Level?	LCS Accuracy Control Limits (%R) Lower Limit	LCS Accuracy Control Limits (%R) Upper Limit	MS/MSD Accuracy Control Limits (%R) Lower Limit	MS/MSD Accuracy Control Limits (%R) Upper Limit	Precision Water % RPD
SW 8260B or C	Ethylbenzene	100-41-4	ug/L	1	1.3	1.5	700	--	1.3	NO	NO	NO	73	127	73	127	20
SW 8260B or C	Hexachlorobutadiene	87-68-3	ug/L	0.6	0.26	0.86	--	--	0.26	YES	NO	NO	67	131	67	131	20
SW 8260B or C	Isopropylbenzene (Cumene)	98-82-8	ug/L	1	390	680	--	--	390	NO	NO	NO	75	127	75	127	20
SW 8260B or C	Methylene chloride	75-09-2	ug/L	1	9.9	4.8	5	5	4.8	NO	NO	NO	63	137	63	137	20
SW 8260B or C	Naphthalene	91-20-3	ug/L	1	0.14	0.14	--	--	0.14	YES	NO	NO	54	138	54	138	20
SW 8260B or C	n-Butylbenzene	104-51-8	ug/L	1	780	--	--	--	780	NO	NO	NO	69	137	69	137	20
SW 8260B or C	n-Propylbenzene	103-65-1	ug/L	1	530	--	--	--	530	NO	NO	NO	72	129	72	129	20
SW 8260B or C	sec-Butylbenzene	135-98-8	ug/L	1	--	--	--	--	--	NO	NO	NO	72	127	72	127	20
SW 8260B or C	Styrene	100-42-5	ug/L	1	1,100	1,600	100	100	100	NO	NO	NO	65	134	65	134	20
SW 8260B or C	tert-Butyl Methyl Ether (MTBE)	1634-04-4	ug/L	5	12	12	--	13	12	NO	NO	NO	65	123	65	123	20
SW 8260B or C	tert-Butylbenzene	98-06-6	ug/L	1	--	--	--	--	--	NO	NO	NO	70	129	70	129	20
SW 8260B or C	Tetrachloroethene	127-18-4	ug/L	1	9.7	0.11	5	5	0.11	YES	NO	NO	66	128	66	128	20
SW 8260B or C	Toluene	108-88-3	ug/L	1	860	2,300	1,000	150	150	NO	NO	NO	77	122	77	122	20
SW 8260B or C	trans-1,2-Dichloroethene	156-60-5	ug/L	1	86	110	100	10	10	NO	NO	NO	63	137	63	137	20
SW 8260B or C	trans-1,3-Dichloropropene	10061-02-6	ug/L	1	--	--	--	--	--	NO	NO	NO	59	135	59	135	20
SW 8260B or C	Trichloroethene	79-01-6	ug/L	1	0.44	1.7	5	5	0.44	YES	NO	NO	70	127	70	127	20
SW 8260B or C	Trichlorofluoromethane (Freon 11)	75-69-4	ug/L	1	1,100	1,300	--	150	150	NO	NO	NO	57	129	57	129	20
SW 8260B or C	Vinyl Chloride	75-01-4	ug/L	0.5	0.015	0.016	2	0.5	0.015	YES	NO	NO	50	134	50	134	20
SW 8260B or C	Xylenes, Total	1330-20-7	ug/L	2	190	200	10,000	1,750	190	NO	NO	NO	75	125	75	125	20
SW 8260B or C	m -Xylene	108-38-3	ug/L	2	190	1,400	--	--	190	NO	NO	NO	76	128	76	128	20
SW 8260B or C	o-Xylene	95-47-6	ug/L	1	190	1,400	--	--	190	NO	NO	NO	80	121	80	121	20
SW 8260B or C	p-Xylene	106-42-3	ug/L	1	190	1,500	--	--	190	NO	NO	NO	76	128	76	128	20
SW 8270C or D	1,2,4-Trichlorobenzene	120-82-1	ug/L	10	0.99	8.2	70	--	0.99	YES	NO	NO	37	120	37	120	20
SW 8270C or D	1,2-Dichlorobenzene	95-50-1	ug/L	10	280	370	600	--	280	NO	NO	NO	33	120	33	120	20
SW 8270C or D	1,3-Dichlorobenzene	541-73-1	ug/L	10	--	--	--	--	--	NO	NO	NO	32	120	32	120	20
SW 8270C or D	1,4-Dichlorobenzene	106-46-7	ug/L	10	0.42	0.43	75	--	0.42	YES	NO	NO	32	120	32	120	20
SW 8270C or D	2,4,5-Trichlorophenol	95-95-4	ug/L	50	890	3,700	--	--	890	NO	NO	NO	49	120	49	120	20
SW 8270C or D	2,4,6-Trichlorophenol	88-06-2	ug/L	10	3.5	6.1	--	--	3.5	YES	NO	NO	49	126	49	126	20
SW 8270C or D	2,4-Dichlorophenol	120-83-2	ug/L	10	35	110	--	--	35	NO	NO	NO	48	120	48	120	20
SW 8270C or D	2,4-Dimethylphenol	105-67-9	ug/L	10	270	730	--	--	270	NO	NO	NO	28	120	28	120	20
SW 8270C or D	2,4-Dinitrophenol	51-28-5	ug/L	10	30	73	--	--	30	NO	NO	NO	25	130	25	130	20
SW 8270C or D	2,4-Dinitrotoluene	121-14-2	ug/L	10	0.2	73	--	--	0.2	YES	NO	NO	51	120	51	120	20
SW 8270C or D	2,6-Dinitrotoluene	606-20-2	ug/L	10	15	37	--	--	15	NO	NO	NO	49	120	49	120	20
SW 8270C or D	2-Chloronaphthalene	91-58-7	ug/L	10	550	2,900	--	--	550	NO	NO	NO	49	120	49	120	20
SW 8270C or D	2-Chlorophenol	95-57-8	ug/L	10	71	180	--	--	71	NO	NO	NO	37	120	37	120	20
SW 8270C or D	2-Methylnaphthalene	91-57-6	ug/L	10	27	150	--	--	27	NO	NO	NO	46	120	46	120	20
SW 8270C or D	2-Methylphenol (o-Cresol)	95-48-7	ug/L	10	720	1,800	--	--	720	NO	NO	NO	38	120	38	120	20
SW 8270C or D	2-Nitroaniline	88-74-4	ug/L	50	150	--	--	--	150	NO	NO	NO	48	120	48	120	20
SW 8270C or D	2-Nitrophenol	88-75-5	ug/L	10	--	--	--	--	--	NO	NO	NO	39	123	39	123	20
SW 8270C or D	3,3'-Dichlorobenzidine	91-94-1	ug/L	20	0.11	0.15	--	--	0.11	YES	NO	NO	20	120	20	120	20
SW 8270C or D	3-Nitroaniline	99-09-2	ug/L	50	--	3.2	--	--	3.2	YES	NO	NO	20	126	20	126	20
SW 8270C or D	4,6-Dinitro-2-methylphenol	534-52-1	ug/L	50	1.2	3.7	--	--	1.2	YES	NO	NO	40	130	40	130	20
SW 8270C or D	4-Bromophenyl Phenyl Ether	101-55-3	ug/L	10	--	--	--	--	--	NO	NO	NO	52	120	52	120	20
SW 8270C or D	4-Chloro-3-methylphenol	59-50-7	ug/L	20	1,100	--	--	--	1,100	NO	NO	NO	47	120	47	120	20
SW 8270C or D	4-Chloroaniline	106-47-8	ug/L	20	0.32	1.2	--	--	0.32	YES	NO	NO	20	120	20	120	20
SW 8270C or D	4-Chlorophenyl phenyl ether	7005-72-3	ug/L	10	--	--	--	--	--	NO	NO	NO	50	120	50	120	20
SW 8270C or D	4-Methylphenol (p-Cresol)	106-44-5	ug/L	50	1,400	180	--	--	180	NO	NO	NO	32	120	32	120	20
SW 8270C or D	4-Nitroaniline	100-01-6	ug/L	50	3.3	3.2	--	--	3.2	YES	NO	NO	36	120	36	120	20
SW 8270C or D	4-Nitrophenol	100-02-7	ug/L	50	--	--	--	--	--	NO	NO	NO	20	120	20	120	20
SW 8270C or D	Acenaphthene	83-32-9	ug/L	10	400	2,200	--	--	400	NO	NO	NO	47	120	47	120	20
SW 8270C or D	Acenaphthylene	208-96-8	ug/L	10	--	--	--	--	--	NO	NO	NO	50	120	50	120	20
SW 8270C or D	Anthracene	120-12-7	ug/L	10	1,300	11,000	--	--	1,300	NO	NO	NO	54	120	54	120	20
SW 8270C or D	Benzo (a) anthracene	56-55-3	ug/L	10	0.029	0.029	--	--	0.029	YES	NO	NO	56	100	56	100	20
SW 8270C or D	Benzo (a) pyrene	50-32-8	ug/L	10	0.0029	0.0029	0.2	--	0.0029	YES	YES	NO	53	120	53	120	20
SW 8270C or D	Benzo (b) fluoranthene	205-99-2	ug/L	10	0.029	0.029	--	--	0.029	YES	NO	NO	45	124	45	124	20
SW 8270C or D	Benzo (g,h,i) perylene	191-24-2	ug/L	10	--	--	--	--	--	NO	NO	NO	38	123	38	123	20
SW 8270C or D	Benzo (k) fluoranthene	207-08-9	ug/L	10	0.29	0.29	--	--	0.29	YES	NO	NO	45	124	45	124	20
SW 8270C or D	Benzoic acid	65-85-0	ug/L	100	58,000	150,000	--	--	58,000	NO	NO	NO	20	120	20	120	20
SW 8270C or D	Benzyl alcohol	100-51-6	ug/L	20	1,500	18,000	--	--	1,500	NO	NO	NO	30	120	30	120	20
SW 8270C or D	bis (2-chloroethoxy) methane	111-91-1	ug/L	10	47	110	--	--	47	NO	NO	NO	46	120	46	120	20
SW 8270C or D	bis (2-chloroethyl) ether	111-44-4	ug/L	10	0.012	0.012	--	--	0.012	YES	NO	NO	37	120	37	120	20
SW 8270C or D	bis (2-chloroisopropyl) ether	108-60-1	ug/L	10	0.31	0.32	--	--	0.31	YES	NO	NO	26	131	26	131	20
SW 8270C or D	bis (2-ethylhexyl) phthalate	117-81-7	ug/L	10	0.071	4.8	6	--	0.071	YES	YES	NO	42	126	42	126	20
SW 8270C or D	Butyl benzylphthalate	85-68-7	ug/L	10	14	35	--	--	14	NO	NO	NO	46	120	46	120	20
SW 8270C or D	Chrysene	218-01-9	ug/L	10	2.9	2.9	--	--	2.9	YES	NO	NO	55	120	55	120	20
SW 8270C or D	Dibenzo (a,h) anthracene	53-70-3	ug/L	10	0.0029	0.0029	--	--	0.0029	YES	NO	NO	42	127	42	127	20
SW 8270C or D	Dibenzofuran	132-64-9	ug/L	10	5.8	--	--	--	5.8	YES	NO	NO	54	120	54	120	20
SW 8270C or D	Diethyl phthalate	84-66-2	ug/L	10	11,000	29,000	--	--	11,000	NO	NO	NO	41	120	41	120	20
SW 8270C or D	Dimethyl phthalate	131-11-3	ug/L	10	--	--	--	--	--	NO	NO	NO	25	127	25	127	20
SW 8270C or D	Di-n-butylphthalate	84-74-2	ug/L	10	670	3,700	--	--	670	NO	NO	NO	54	120	54	120	20
SW 8270C or D	Di-n-octylphthalate	117-84-0	ug/L	10	--	--	--	--	--	NO	NO	NO	37	137	37	137	20
SW 8270C or D	Fluoranthene	206-44-0	ug/L	10	630	1,500	--	--	630	NO	NO	NO	54	120	54	120	20
SW 8270C or D	Fluorene	86-73-7	ug/L	10	220	1,500	--	--	220	NO	NO	NO	50	120	50	120	20
SW 8270C or D	Hexachlorobenzene	118-74-1	ug/L	10	0.042	0.042	1	--	0.042	YES	YES	NO	52	120	52	120	20
SW 8270C or D	Hexachlorobutadiene	87-68-3	ug/L	10	0.26	0.86	--	--	0.26	YES	NO	NO	27	120	27	120	20
SW 8270C or D	Hexachloroethane	67-72-1	ug/L	10	0.79	4.8	--	--	0.79	YES	NO	NO	28	120	28	120	20
SW 8270C or D	Indeno (1,2,3-c,d) pyrene	193-39-5	ug/L	10	0.029	0.029	--	--	0.029	YES	NO	NO	43	125	43	125	20

TABLE 4-2
Reporting Limits, Accuracy, and Precession Limits for Groundwater
PG&E Program Quality Assurance Project Plan Addendum

Method	Constituent	CAS	Units	QAPP RL	EPA Regional Screening Levels May 2012	EPA Regional Screening Levels 2008	Federal Drinking Water Standards MCLs	California Drinking Water Standards MCLs	Most Stringent Screening Level[1]	Does RL Exceed Screening Level?	Does RL Exceed Federal MCL Level?	Does RL Exceed California MCL Level?	LCS Accuracy Control Limits (%R) Lower Limit	LCS Accuracy Control Limits (%R) Upper Limit	MS/MSD Accuracy Control Limits (%R) Lower Limit	MS/MSD Accuracy Control Limits (%R) Upper Limit	Precision Water % RPD
SW 8270C or D	Isophorone	78-59-1	ug/L	10	67	71	--	--	67	NO	NO	NO	50	120	50	120	20
SW 8270C or D	Naphthalene	91-20-3	ug/L	10	0.14	0.14	--	--	0.14	YES	NO	NO	39	120	39	120	20
SW 8270C or D	Nitrobenzene	98-95-3	ug/L	10	0.12	3.4	--	--	0.12	YES	NO	NO	44	120	44	120	20
SW 8270C or D	n-Nitrosodi-n-propylamine	621-64-7	ug/L	10	0.0093	0.0096	--	--	0.0093	YES	NO	NO	34	128	34	128	20
SW 8270C or D	n-Nitrosodiphenylamine	86-30-6	ug/L	10	10	14	--	--	10	NO	NO	NO	48	120	48	120	20
SW 8270C or D	Pentachlorophenol	87-86-5	ug/L	50	0.17	0.56	1	--	0.17	YES	YES	NO	38	120	38	120	20
SW 8270C or D	Phenanthrene	85-01-8	ug/L	10	--	--	--	--	--	NO	NO	NO	51	120	51	120	20
SW 8270C or D	Phenol	108-95-2	ug/L	10	4,500	11,000	--	--	4,500	NO	NO	NO	20	120	20	120	20
SW 8270C or D	Pyrene	129-00-0	ug/L	10	87	1,100	--	--	87	NO	NO	NO	49	128	49	128	20
SW 8270SIM	1-methylnaphthalene	90-12-0	ug/L	0.2	0.97	2.3	--	--	0.97	NO	NO	NO	35	131	35	131	30
SW 8270SIM	2-methylnaphthalene	91-57-6	ug/L	0.2	27	150	--	--	27	NO	NO	NO	36	121	36	121	30
SW 8270SIM	Acenaphthene	83-32-9	ug/L	0.2	400	2,200	--	--	400	NO	NO	NO	39	125	39	125	30
SW 8270SIM	Acenaphthylene	208-96-8	ug/L	0.2	--	--	--	--	--	NO	NO	NO	43	140	43	140	30
SW 8270SIM	Anthracene	120-12-7	ug/L	0.2	1,300	11,000	--	--	1,300	NO	NO	NO	41	132	41	132	30
SW 8270SIM	Benzo (a) anthracene	56-55-3	ug/L	0.2	0.029	0.029	--	--	0.029	YES	NO	NO	58	141	58	141	30
SW 8270SIM	Benzo (a) pyrene	50-32-8	ug/L	0.2	0.0029	0.0029	0.2	--	0.0029	YES	NO	NO	31	142	31	142	30
SW 8270SIM	Benzo (b) fluoranthene	205-99-2	ug/L	0.2	0.029	0.029	--	--	0.029	YES	NO	NO	42	156	42	156	30
SW 8270SIM	Benzo (g,h,i) perylene	191-24-2	ug/L	0.2	--	--	--	--	--	NO	NO	NO	12	171	12	171	30
SW 8270SIM	Benzo (k) fluoranthene	207-08-9	ug/L	0.2	0.29	0.29	--	--	0.29	NO	NO	NO	49	165	49	165	30
SW 8270SIM	Chrysene	218-01-9	ug/L	0.2	2.9	2.9	--	--	2.9	NO	NO	NO	51	155	51	155	30
SW 8270SIM	Dibenzo (a,h) anthracene	53-70-3	ug/L	0.2	0.0029	0.0029	--	--	0.0029	YES	NO	NO	28	153	28	153	30
SW 8270SIM	Fluoranthene	206-44-0	ug/L	0.2	630	1,500	--	--	630	NO	NO	NO	47	158	47	158	30
SW 8270SIM	Fluorene	86-73-7	ug/L	0.2	220	1,500	--	--	220	NO	NO	NO	40	140	40	140	30
SW 8270SIM	Indeno (1,2,3-c,d) pyrene	193-39-5	ug/L	0.2	0.029	0.029	--	--	0.029	YES	NO	NO	20	167	20	167	30
SW 8270SIM	Naphthalene	91-20-3	ug/L	0.2	0.14	0.14	--	--	0.14	YES	NO	NO	39	125	39	125	30
SW 8270SIM	Phenanthrene	85-01-8	ug/L	0.2	--	--	--	--	--	NO	NO	NO	46	144	46	144	30
SW 8270SIM	Pyrene	129-00-0	ug/L	0.2	87	1,100	--	--	87	NO	NO	NO	39	158	39	158	30
CF-IRMS	D18O	D18O	0/00	--	--	--	--	--	--	NO	NO	NO	--	--	--	--	20
CF-IRMS	DD	DD	0/00	--	--	--	--	--	--	NO	NO	NO	--	--	--	--	20
SM 7110 C	Gross alpha	Gross alpha	pCi/L	3	--	--	15	15	15	NO	NO	NO	--	--	--	--	20
EPA 900.0	Gross beta	Gross beta	pCi/L	4	--	--	--	4	4	NO	NO	NO	--	--	--	--	20
EPA 903.1	Radium-226	013982-63-3	pCi/L	1	--	--	5	--	5	NO	NO	NO	--	--	--	--	20
EPA 904.0	Radium-228	015262-20-1	pCi/L	1	--	--	5	--	5	NO	NO	NO	--	--	--	--	20
EPA 905.0	Strontium	7440-26-4	pCi/L	2	--	--	--	8	8	NO	NO	NO	--	--	--	--	20
EPA 906.0	Tritium	10028-17-8	pCi/L	1,000	--	--	--	20,000	20,000	NO	NO	NO	--	--	--	--	20
EPA 908.0	Uranium	7440-61-1	pCi/L	1	--	--	--	20	20	NO	NO	NO	--	--	--	--	20
RSK-175	Carbon Dioxide	124-38-9	ug/L	5	--	--	--	--	--	NO	NO	NO	80	120	80	120	20
RSK-175	Ethane	74-84-0	ug/L	5	--	--	--	--	--	NO	NO	NO	80	120	80	120	20
RSK-175	Ethene	74-85-1	ug/L	5	--	--	--	--	--	NO	NO	NO	80	120	80	120	20
RSK-175	Methane	74-82-8	ug/L	5	--	--	--	--	--	NO	NO	NO	80	120	80	120	20

Notes:

Please keep in mind, Screening Levels are constantly revised by the EPA. The appropriate Screening levels are specific to the project, the location, the agency providing oversight, and the overall Goals of the project.

mg/L = milligrams per liter
ug/L = micrograms per liter
µmhos/cm = micromhos per centimeter
pCi/L = picocuries per liter
PCB - LCS, MS, and MSD only require Aroclor-1016 and Aroclor-1260 spike

[1] Screening levels are established by use of statistical analysis and are not based on the analytical capabilities of labortories or methods. For groundwater, most stringent of:
EPA Regional Screening Levels - 2008 and May 201
Federal Drinking Water Standards, MCLs
*Secondary Federal Drinking Water Standards, MCLs
California Drinking Water Standards, MCLs

TABLE 4-3
Maximum Concentrations for Title 22
PG&E Program Quality Assurance Project Plan Addendum

					CA TTCL/STLC						LCS Accuracy Control Limits (%R)		MS/MSD Accuracy Control Limits (%R)		Precision Soil
Method	Constituent	CAS	Units	TCLP Regulatory Standards	Title 22 TTLC MCL (mg/kg)	If TTLC Concentration is ≥ this value STLC Analysis Must be performed	Title 22 STLC MCL	Most Stringent Screening Level	RL	Does RL Exceed Screening Level?	Lower Limit	Upper Limit	Lower Limit	Upper Limit	% RPD
SW6010B	Antimony	7440-36-0	mg/L	--	500	150	15	15	0.04	NO	85	115	75	125	20
SW6010B	Arsenic	7440-38-2	mg/L	5	500	50	5	5	0.01	NO	85	115	75	125	20
SW6010B	Barium	7440-39-3	mg/L	100	10,000	1,000	100	100	0.04	NO	85	115	75	125	20
SW6010B	Beryllium	7440-41-7	mg/L	--	75	7.5	0.75	0.75	0.01	NO	85	115	75	125	20
SW6010B	Cadmium	7440-43-9	mg/L	1	100	10	1	1	0.02	NO	85	115	75	125	20
SW6010B	Chromium	7440-47-3	mg/L	5	2,500	50	5	5	0.02	NO	85	115	75	125	20
SW3060A	Chromium, Hexavalent	18540-29-9	mg/L	--	500	50	5	5	0.004	NO	90	110	90	110	20
SW6010B	Cobalt	7440-48-4	mg/L	--	8,000	800	80	80	0.1	NO	85	115	75	125	20
SW6010B	Copper	7440-50-8	mg/L	--	2,500	250	25	25	0.02	NO	85	115	75	125	20
SW6010B	Lead	7439-92-1	mg/L	5	1,000	50	5	5	0.02	NO	85	115	75	125	20
SW7470A	Mercury	7439-97-6	mg/L	0.2	20	2	0.2	0.2	0.004	NO	75	125	75	125	20
SW6010B	Molybdenum	7439-98-7	mg/L	--	3,500	3,500	350	350	0.04	NO	85	115	75	125	20
SW6010B	Nickel	7440-02-0	mg/L	--	2,000	200	20	20	0.04	NO	85	115	75	125	20
SW6010B	Selenium	7782-49-2	mg/L	1	100	10	1	1	0.2	NO	85	115	75	125	20
SW6010B	Silver	7440-22-4	mg/L	5	500	50	5	5	0.1	NO	85	115	75	125	20
SW6010B	Thallium	7440-28-0	mg/L	--	700	70	7	7	0.02	NO	85	115	75	125	20
SW6010B	Vanadium	7440-62-2	mg/L	--	2,400	240	24	24	0.1	NO	85	115	75	125	20
SW6010B	Zinc	7440-66-6	mg/L	--	5,000	2,500	250	250	0.4	NO	85	115	75	125	20
SW8081A	4,4'-DDD	72-54-8	mg/L	--	1	--	0.1	0.1	0.002	NO	50	139	50	139	30
SW8081A	4,4'-DDE	72-55-9	mg/L	--	1	--	0.1	0.1	0.002	NO	48	137	48	137	30
SW8081A	4,4'-DDT	50-29-3	mg/L	--	1	--	0.1	0.1	0.002	NO	47	138	47	138	30
SW8081A	Aldrin	309-00-2	mg/L	--	1.4	--	0.14	0.14	0.002	NO	42	138	42	138	30
SW8081A	Chlordane	57-74-9	mg/L	0.03	2.5	--	0.25	0.03	0.002	NO	63	123	63	123	30
SW8081A	Dieldrin	60-57-1	mg/L	--	8	--	0.8	0.8	0.002	NO	62	129	62	129	30
SW8081A	Endrin	72-20-8	mg/L	0.02	0.2	--	0.02	0.02	0.002	NO	56	134	56	134	30
SW8081A	Heptachlor	76-44-8	mg/L	--	4.7	--	0.47	0.47	0.002	NO	51	128	51	128	30
SW8081A	Heptachlor (and its epoxide)	76-44-8	mg/L	0.008	4.7	--	0.47	0.008	0.002	NO	62	131	62	131	30
SW8081A	Kepone	143-50-0	mg/L	--	21	--	2.1	2.1	1	NO					30
SW8081A	Lindane	58-89-9	mg/L	0.4	4	--	0.4	0.4	0.002	NO	30	146	30	146	30
SW8081A	Methoxychlor	72-43-5	mg/L	10	100	--	10	10	0.01	NO	56	150	56	150	30
SW8081A	Toxaphene	8001-35-2	mg/L	0.5	5	--	0.5	0.5	0.02	NO	41	126	41	126	30
SW8082	Polychlorinated biphenyls (PCB)		mg/L	--	50	--	5	5	1	NO	29	141	29	141	30
SW8151A	2,4,5-Trichlorophenoxypropionic acid (2,4,5-TP) (Silvex)	Vanadium	mg/L	1	10	--	1	1	0.2	NO	49	126	49	126	30
SW8151A	2,4-Dichlorophenoxyacetic acid (2,4-D)	94-75-7	mg/L	10	100	--	10	10	0.2	NO	39	120	39	120	30
SW8260B	1,1-Dichloroethylene	75-35-4	mg/L	0.7	--	--	--	0.7	0.02	NO	68	130	68	130	20
SW8260B	1,2-Dichloroethane (EDC)	107-06-2	mg/L	0.5	--	--	--	0.5	0.01	NO	69	132	69	132	20
SW8260B	1,4-Dichlorobenzene	106-46-7	mg/L	7.5	--	--	--	7.5	0.01	NO	74	123	74	123	20
SW8260B	2-Butanone (MEK)	78-93-3	mg/L	200	--	--	--	200	0.2	NO	49	136	49	136	20
SW8260B	Benzene	71-43-2	mg/L	0.5	--	--	--	0.5	0.008	NO	81	122	81	122	20
SW8260B	Carbon tetrachloride	56-23-5	mg/L	0.5	--	--	--	0.5	0.01	NO	66	138	66	138	20
SW8260B	Chlorobenzene	108-90-7	mg/L	100	--	--	--	100	0.01	NO	81	122	81	122	20
SW8260B	Chloroform	67-66-3	mg/L	6	--	--	--	6	0.02	NO	69	128	69	128	20
SW8260B	Hexachlorobutadiene	87-68-3	mg/L	0.5	--	--	--	0.5	0.012	NO	67	131	67	131	20
SW8260B	m-Cresol	108-39-4	mg/L	200	--	--	--	200	1	NO	29	141	29	141	20
SW8260B	o-Cresol (2-Methylphenol)	95-48-7	mg/L	200	--	--	--	200	1	NO	38	120	38	120	20
SW8260B	p-Cresol (4-Methylphenol)	106-44-5	mg/L	200	--	--	--	200	1	NO	32	120	32	120	20
SW8260B	Tetrachloroethylene (PCE)	127-18-4	mg/L	0.7	2,040	--	204	0.7	0.02	NO	66	128	66	128	20
SW8260B	Total Cresols		mg/L	200	--	--	--	200	10	NO					20
SW8260B	Trichloroethylene (TCE)	79-01-6	mg/L	0.5	--	--	--	0.5	0.02	NO	70	127	70	127	20
SW8260B	Vinyl chloride	75-01-4	mg/L	0.2	--	--	--	0.2	0.01	NO	50	134	50	134	20
SW8270C	2,4,5-Trichlorophenol	95-95-4	mg/L	400	--	--	--	400	1	NO	49	120	49	120	20

TABLE 4-3
Maximum Concentrations for Title 22
PG&E Program Quality Assurance Project Plan Addendum

					CA TTCL/STLC						LCS Accuracy Control Limits (%R)		MS/MSD Accuracy Control Limits (%R)		Precision Soil
Method	Constituent	CAS	Units	TCLP Regulatory Standards	Title 22 TTLC MCL (mg/kg)	If TTLC Concentration is ≥ this value STLC Analysis Must be performed	Title 22 STLC MCL	Most Stringent Screening Level	RL	Does RL Exceed Screening Level?	Lower Limit	Upper Limit	Lower Limit	Upper Limit	% RPD
SW8270C	2,4,6-Trichlorophenol	88-06-2	mg/L	2	--	--	--	2	0.2	NO	49	126	49	126	20
SW8270C	2,4-Dinitrotoluene	121-14-2	mg/L	0.13	--	--	--	0.13	0.1	NO	51	120	51	120	20
SW8270C	Hexachlorobenzene	118-74-1	mg/L	0.13	--	--	--	0.13	0.1	NO	52	120	52	120	20
SW8270C	Hexachlorobutadiene	87-68-3	mg/L	0.5	--	--	--	0.5	0.2	NO	27	120	27	120	20
SW8270C	Hexachloroethane	67-72-1	mg/L	3	--	--	--	3	0.2	NO	28	120	28	120	20
SW8270C	Nitrobenzene	98-95-3	mg/L	2	--	--	--	2	0.2	NO	44	120	44	120	20
SW8270C	Pentachlorophenol	87-86-5	mg/L	100	17	--	1.7	1.7	1	NO	38	120	38	120	20
SW8270C	Pyridine	110-86-1	mg/L	5	--	--	--	5	5	NO	27	120	27	120	20
Dioxins	Dioxin (2,3,7,8-TCDD)	1746-01-6	mg/L	--	0.01	--	0.001	0.001	0.001	NO					20

Notes:

mg/L = milligrams per liter
mg/kg = milligrams per kilogram

TCLP = toxicity characteristic leaching procedure
STLC = soluble threshold limit concentration
TTLC = total threshold limit concentration

Operation and Maintenance Manual

Volume 3

Contingency Plan

Final (100%) Design Submittal for the Final Groundwater Remedy

PG&E Topock Compressor Station Needles, California

Prepared for

Pacific Gas and Electric Company

November 2015

CH2MHILL®

155 Grand Avenue
Suite 800
Oakland, California 94612

Contents

Acronyms and Abbreviations ..... **v**

1.0 Introduction **1-1**

2.0 Contingency Planning **2-1**

2.1 In-Situ Remediation System 2-1
2.2 Remedy-produced Water Management System 2-1
2.3 Freshwater Supply System 2-2
2.4 Power Supply System 2-3
2.5 Remedy SCADA, Control Systems, and Instrumentation 2-4
2.6 Enhanced Evaporation at TCS Evaporation Ponds 2-4

3.0 References **3-1**

Tables

1.0-1 Severity Scoring Used in Failure Mode and Effects Analysis 1-3
2.1-1 Failure Mode Effect Analysis Matrix — In-Situ Remediation System 2-5
2.2-1 Failure Mode Effect Analysis Matrix — Remedy-produced Water Management System 2-15
2.3-1 Failure Mode Effect Analysis Matrix — Freshwater Supply 2-21
2.4-1 Failure Mode Effect Analysis Matrix — Power Supply 2-23
2.5-1 Failure Mode Effect Analysis Matrix — Remedy SCADA, Control Systems, and Instruments 2-25
2.6-1 Failure Mode Effect Analysis Matrix — Enhanced Evaporation at TCS Evaporation Ponds 2-29

Appendices

A Contingent Dissolved Metals Removal System Conceptual Design Basis
B Addendum to Freshwater Pre-injection Treatment System Conceptual Design Basis

Acronyms and Abbreviations

µg/L	micrograms per liter
ARAR	Applicable or Relevant and Appropriate Requirement
CEQA	California Environmental Quality Act
CIP	clean-in-place
Cr(III)	trivalent chromium
Cr(T)	total chromium
Cr(VI)	hexavalent chromium
DMRS	dissolved metals removal system
DOI	U.S. Department of the Interior
EIR	Environmental Impact Report
FMEA	Failure Mode Effect Analysis
FWPTS	freshwater pre-injection treatment system
gpm	gallons per minute
H&S	health and safety
HMI	human-machine interface
HNWR-1A	Havasu National Wildlife Refuge Well No. 1A
IRL	Inner Recirculation Loop
MG	million gallons
NTH IRZ	National Trails Highway In-Situ Reactive Zone
O&M	operation and maintenance
OIT	operator interface terminal
PG&E	Pacific Gas and Electric Company
PLC	programmable logic controller
RAOs	Remedial Action Objectives
RICE	reciprocating internal combustion engine
SCADA	Supervisory Control and Data Acquisition
SWRCB	State Water Resources Control Board
TCS	Topock Compressor Station
UPS	uninterruptible power supply

1.0 Introduction

This volume of the Operation and Maintenance (O&M) Manual presents the contingency plans for the Pacific Gas and Electric Company (PG&E) Topock Compressor Station (TCS) groundwater remedy, as required by the 1996 Consent Agreement (California Department of Toxic Substances Control [DTSC] 1996) and the 2013 Consent Decree (U.S. Department of the Interior [DOI] 2013). Contingency planning was conducted as a part of the final groundwater remedy design process to anticipate potential risks and organize plans to mitigate these risks. A contingency plan such as this one is typically used during the design phase as a tool to anticipate potential risks and to develop methods to mitigate these risks either within the design or as part of the future system operations. The contingency planning is done using a method termed Failure Mode Effect Analysis (FMEA). The FMEA tool provides an analytical and systematic approach to reviewing potential failure modes and their associated causes, and therefore helps to assess which risks pose the greatest concern and to prioritize risk management in order to prevent problems before they arise. The objective of the FMEA process is to outline possible failures that could cause unacceptable conditions in the groundwater remedy. Mitigation measures in design and operation are focused on these issues first and foremost. The FMEA also identifies conditions that, while not unacceptable, are issues that PG&E will strive to avoid or minimize. The following types of unacceptable conditions have been identified:

- **Category A: Unacceptable Remedy Performance** — The Remedial Action Objectives (RAOs) are not met. Specifically, this could include migration of unacceptable concentrations of constituents of concern to the Colorado River, permanent expansion of the target remediation area, or not achieving the numeric cleanup goals of the RAOs.
- **Category B: Schedule** — Failures that cause the schedule to achieving the groundwater remedy RAOs to be extended by more than 5 to 15 years.
- **Category C: Cost** — Failures that cause the cost of achieving the groundwater remedy RAOs to be increased by more than $10,000,000 to $50,000,000.
- **Category D: Significant Change to Impact** — Changes (such as visual impact) that necessitate additional California Environmental Quality Act (CEQA) analysis.
- **Category E: Significant Health and Safety (H&S) or Compliance Incident** — A health and safety incident that results in lost work time for remedy or Compressor Station staff or the public; an environmental compliance Notice of Violation (other than related to remedy performance); or violation of the requirements in the Applicable or Relevant and Appropriate Requirements (ARARs).

The mitigation measures described in the FMEA tables in this Contingency Plan are taken to minimize or eliminate the likelihood, or severity, of these unacceptable conditions. The FMEA also identifies potential failures that could cause conditions that, while not unacceptable as defined above, should be prevented or minimized.

Causes of potential failures are mitigated in the design process (e.g., select equipment to accommodate a range of anticipated operational conditions), in adaptive operations (e.g., adjusting flow rates and/or carbon substrate dosing; installation of future provisional remediation, freshwater supply, and/or monitoring wells; etc.), and/or in corrective action/contingency response planning (e.g., installing additional wells). Operational mitigation descriptions include the condition that an operator would observe and the action he/she would take. A preventative maintenance schedule is proposed as an overall mitigation step to minimize risk of unexpected failures.

Contingency planning has been prepared for six key elements of the groundwater remedy:

- In-Situ Remediation System (Section 2.1)
- Remedy-produced Water Management System (Section 2.2)
- Freshwater Supply (Section 2.3)

- Power Supply (Section 2.4)
- Remedy Supervisory Control and Data Acquisition (SCADA), Control Systems, and Instrumentation (Section 2.5)
- Enhanced Evaporation at TCS Evaporation Ponds (Section 2.6)

Each system's analysis in this FMEA includes an evaluation of the likelihood and severity of each type of potential failure to help prioritize mitigation. The severity scoring is shown in Table 1.0-1 (tables are presented at the end of each section). It should be noted that the "Severity of Effect" column denotes the implication of the effect if it were to occur, which should be unlikely since the mitigation measures are being taken. As shown in Table 1.0-1, unacceptable conditions are those with a severity score of 4 or above. The type of unacceptable condition is only indicated in the FMEA tables where there is a severity score of 4 or above. A potential failure may result in a 6-month schedule increase (severity score of 2), for example, without constituting an unacceptable condition and therefore the type of unacceptable condition would not be indicated in the FMEA table for this example. Quantifiable thresholds have not been defined for condition Categories A (remedy performance), D (change to impact), and E (H&S/compliance) to distinguish between different severity scores. Severity of effect for these categories is assessed qualitatively on a relative scale. For example, an H&S incident (Category E) with a severity score of 5 is expected to be the most serious with comparatively more lost work time, injury to personnel, etc. than a severity-level 4 H&S incident. The likelihood score is also relative, with 5 being the highest likelihood, though not necessarily highly likely.

The RAOs for the final groundwater remedy are to:

1. Prevent ingestion of groundwater as a potable water source having hexavalent chromium (Cr[VI]) in excess of the regional background concentration of 32 micrograms per liter (µg/L).
2. Prevent or minimize migration of total chromium (Cr[T]) and Cr(VI) in groundwater to ensure concentrations in surface water do not exceed water quality standards that support the designated beneficial uses of the Colorado River (11 µg/L Cr[VI]).
3. Reduce the mass of Cr(T) and Cr(VI) in groundwater at the site to achieve compliance with ARARs in groundwater. This RAO will be achieved through cleanup goal of regional background of 32 µg/L of Cr(VI).
4. Ensure that the geographic location of the target remediation area does not permanently expand following completion of the remedial action.

Compliance monitoring will include groundwater and surface water sampling and will focus on confirming that the final groundwater remedy is achieving these RAOs. Compliance monitoring is primarily designed to ensure that the remedy is meeting RAOs 2, 3, and 4, relating to controlling migration and reducing mass to an adequate degree.

The Contingency Plan anticipates potential issues that may occur with the remedy and identifies design and adaptive operations elements to mitigate those issues, which have been incorporated into the 100% Design Submittal. The adaptive operations framework is presented in data quality objectives in the Sampling and Monitoring Plan presented in Volume 2 of this O&M Manual (see also figures in Section 2 of Volume 2) and is referenced in the FMEA for the IRZ. Additional mitigations identified in the FMEA that may be required and are not covered by design or adaptive operations constitute contingency actions, as outlined in this plan.

TABLE 1.0-1

Severity Scoring Used in Failure Mode and Effects Analysis
Groundwater Remedy Operation and Maintenance Manual
Volume 3: Contingency Plan
PG&E Topock Compressor Station, Needles, California

	Category				
Severity of Effect	**A - Unacceptable Remedy Performance**	**B - Schedule**	**C - Cost**	**D - Change to Impact**	**E - H&S or Compliance**
Unacceptable Conditions					
5	Remedy does not meet RAOs, cleanup goals, design objectives, or otherwise perform as required.	Very significant schedule increase more than 15 years	Very significant cost increase more than $50M	Additional CEQA analysis required	• Serious H&S incident • ARARs, mitigation measures, or other compliance Notice of Violation event
4	Not defined	Schedule increase more than 5 years	Cost increase more than $10M	Not defined	Not defined
Other Conditions					
3	Remedy performance, operational, or other issue that prompts remedy (or portions thereof) to be temporarily shut down, but does not constitute unacceptable condition as defined above	Schedule increase 1-5 years	Cost increase $1M - $10M	Not defined	Not defined
2	Less significant/nuisance issues with remedy	Schedule increase 6 mo. - 1 year	Cost increase $0.5M - $1M	Not defined	Not defined
1	An incident that has an impact in one or more of the five categories, but less than defined above.				

Notes:
ARAR = applicable or relevant and appropriate requirement
H&S = health and safety
RAO = remedial action objective

2.0 Contingency Planning

2.1 In-Situ Remediation System

The in-situ remediation system includes the following components, as described above and in Section 3.2 of the Final (100%) Basis of Design Report:

- National Trails Highway In-Situ Reactive Zone (NTH IRZ): Line of wells that may be used as both injection and extraction wells to circulate groundwater and distribute an organic carbon source to promote reduction of Cr(VI) to trivalent chromium (Cr[III]).
- Inner Recirculation Loop (IRL):
  - River Bank Extraction Wells along the Colorado River to provide hydraulic capture of the plume, clean up floodplain downgradient of the IRZ, enhance the flow of contaminated groundwater through the NTH IRZ line, and control migration of IRZ-generated by-products.
  - IRL Injection Wells to re-inject groundwater extracted from the River Bank Extraction Wells (which may be amended with an organic carbon source) and/or fresh water into wells in the upgradient portion of the Cr(VI) plume to flush the plume through the NTH IRZ.
- Freshwater Injection Wells to inject fresh water into wells upgradient of the Cr(VI) plume to control and confine the plume migration to the west, to assist with flushing the chromium plume through the NTH IRZ, and to constrain westward spread of carbon-amended water and in-situ byproducts from the Inner Recirculation Loop.
- TCS Recirculation Loop:
  - East Ravine Extraction Wells in the eastern (downgradient) end of the East Ravine to provide hydraulic capture of contaminated groundwater in bedrock and Transwestern Bench Extraction Wells in the area northeast of the TCS to accelerate capture of Cr(VI) impacted groundwater from the alluvial deposits located downgradient of the TCS.
  - TCS Injection Wells located upgradient of the TCS for the re-injection of groundwater extracted from the East Ravine Extraction Wells and Transwestern Bench Extraction Wells, which will be amended with an organic carbon source, to promote reduction of the Cr(VI) to Cr(III) and remove elevated Cr(VI) groundwater concentrations from the alluvial aquifer in the vicinity of the TCS.

Table 2.1-1 presents the results of the FMEA for the in-situ remediation system.

Potential failures identified include possible ways in which the remedy may not perform per the original intent. This risk is mitigated through design (including pilot testing, predictive simulations/modeling, additional design efforts, and designing in flexibility) and operational flexibility (as described in the Decision Rules/Operational Framework included in Volume 2 of this O&M Manual). The FMEA includes references to elements of the 100% design submittal that provide additional details on how remedy risks are being mitigated in the design and operational strategy. Other potential failures include operational and safety issues involved with mechanical equipment and chemicals for which PG&E has set as a design criterion that two levels of protection would have to fail simultaneously for a failure to be considered significant enough to be included in the FMEA.

2.2 Remedy-produced Water Management System

The final groundwater remedy is reliant on several dozen wells used for the IRZ, freshwater and carbon-amended water injection, and groundwater extraction. For all wells, especially the injection and IRZ wells, regular maintenance such as backwashing and rehabilitation is vital to ensure efficient and effective operations during the 30-year projected life of the remedy. Well maintenance will also prevent or reduce the need for drilling new replacement wells. These maintenance activities will produce an ongoing water stream that must be managed as

part of the remedial action. Other types of produced water with smaller volumes will also need to be managed, such as monitoring well sampling and development purge water, equipment decontamination wastewater, and rainfall that collects in remedy facility secondary containment. Providing a reliable means of managing this wastewater is a necessary supporting component of the overall remedy.

The Remedy-produced Water Management System includes the generation, transportation, conditioning, reuse and disposal of conditioned water. The system is described in Section 2.3 of the Operation and Maintenance Plan (Volume 1 of this O&M Manual).

Table 2.2-1 presents the FMEA matrix for the Remedy-produced Water Management System. Two main failure types were identified. The first type of failure is the system a) not having capacity to condition the produced water due to produced water flow being greater than forecasted, or b) experiences downtime which could be caused by a range of events (vandalism, acts of God, equipment failure, etc.). This would result in having to truck some or all of the produced water off-site for management. This would increase costs and traffic-related impacts of the remedy. However, it would not impact remedy performance. To mitigate this risk, the conditioning system has been conservatively sized and space has been reserved for build-out of additional equipment if needed. Also, multiple disposal/reuse options were established to reduce the risk of disposal/reuse limiting produced water management.

The second type of failure is the conditioning system effluent causing performance problems with wells or pipelines used for re-injecting the water. Problems could range up to the possibility of well fouling or scaling requiring replacement of the wells. Water quality issues that could hurt well performance include high suspended solids, high or low pH, or constituents/ions that precipitate out and scale the well. Loss of wells due to fouling or scaling could slow the remedy performance until the wells are rehabilitated or replaced. This risk is mitigated by including fine-particle filtration and in-line monitoring of pH and turbidity in the design. Operational mitigations will include frequent monitoring of the conditioning system performance and of the injectivity of the wells used for re-injecting treated water.

In response to comments on the 60% design documents (RTC #757 DTSC-239, Tribes' comment #341 [see Appendix I of the 100% Basis of Design Report]), a contingent system is included in this Contingency Plan to remove scale-forming ions from remedy-produced water prior to injecting, if needed. The design basis for the contingent system, referred to herein as the dissolved metals removal system (DMRS), is included in Appendix A of this Contingency Plan. The DMRS would be integrated into the remedy-produced water conditioning A-side process, downstream of the A-side filters (see Volume 1, O&M Plan, of the O&M Manual, Sections 2.5 and 3.3). Effluent water from the DMRS would be sent to the remedy-produced water A-side Conditioned Water Tank Farm (TNK-RTP01-1401 and TNK-RTP01-1402), pumped from there to the conditioned water frac tank (T-IRZ00-0620) at the MW-20 Bench, and then returned to the NTH IRZ injection wells via the conditioned water injection pump (PMP-IRZ00-0648) and piping.

The implementation of the contingent DMRS could be triggered by significant performance losses in pipelines and/or wells due to heavy scaling of calcium, iron, magnesium, and/or manganese that cannot be adequately mitigated using planned preventative measures including the clean-in-place (CIP) loop (see Section 5.1 of Volume 1), routine pipeline maintenance procedures (Sections 5.2 and 5.3 of Volume 1), and the well maintenance program (Section 4 of Volume 1).

The DMRS is designed to be fully integrated into the planned conditioning process for remedy-produced water and has space allocated for it in the design, thereby allowing for installation without expansion of the building footprint if required in the future. The DMRS would be primarily located on the second floor of the planned Remedy-produced Water Conditioning Plant. Certain treatment chemicals will be stored on the first floor of the planned Remedy-produced Water Conditioning Plant.

2.3 Freshwater Supply System

The Freshwater Supply System will provide water for the freshwater injection wells used in the groundwater remedy. The freshwater injection is to control and confine the plume migration to the west, assist with flushing

the chromium plume through the IRZ, and constrain westward spread of carbon-amended water and in-situ byproducts from the IRL. The objective of the freshwater supply system is to provide sufficient water of acceptable quality for successful implementation of the remedy. The quantity and quality requirements are defined in Section 3.3 of the Basis of Design Report. Fresh water for the remedy will be supplied from well HNWR-1A, located in Arizona, with the HNWR-1 well as a secondary source and the Topock-2/-3 and Site B wells as contingent sources. To provide maximum flexibility and reliability in the remedy freshwater supply, provisions to plumb and operate the HNWR-1, Topock-2/-3, and Site B wells, if needed in the future, are provided in the final design. For well water quality protection, Volume 2 of the O&M Manual discusses in detail the proposed monitoring plan for the HNWR-1A well and results of a recent source assessment. Table 2.3-1 presents the FMEA matrix for the supply of fresh water.

Per DTSC direction (comment RTC #21 DTSC-2 on the 60% design), a contingent arsenic treatment system is included in the design and is identified herein as the freshwater pre-injection treatment system (FWPTS). The design basis for the FWPTS is included in Appendix B of this Contingency Plan. Space is reserved for the FWPTS next to the planned Remedy-produced Water Conditioning Plant.

The triggering step for implementation of this contingency system was outlined in a letter from the California State Water Resources Control Board (SWRCB) (2013) to DTSC. The SWRCB letter requires that if the leading edge of the arsenic plume above the 10 μg/L water quality objective extends more than 150 feet away from injection locations, PG&E must immediately reassess its modeling calculations and quickly identify interim actions it can take to limit the migration of the arsenic plume. The letter further directs the cessation of the injection of untreated fresh water if the arsenic concentration caused by injection of fresh water is detected above the water quality objective (10 μg/L) at 225 feet from the injection locations. The letter states that at this point, DTSC should either (i) require pretreatment to remove arsenic prior to injection or (ii) require another source of fresh water in order to meet the water quality objective.

2.4 Power Supply System

The power supply system will provide electricity for the groundwater remedy. The design objective of the system is to reliably provide sufficient electricity to power the groundwater remedy's electrically driven components such as pumps, controls, and lighting.

The primary power supply source for the remedy facilities in California will be power generated by the PG&E Topock Compressor Station. A portable, rental backup generator similar to the existing IM-3 back-up generator (Isuzu Model 6WG1X) will be mobilized onsite as needed during project implementation to provide power. A connection panel is included in the final design (see Basis of Design Report Appendix D, Drawing E-00-61, Detail 4) and space has been reserved for the portable rental generator. The power supply for the new water recirculation system and transfer pumps at the TCS evaporation ponds will be a new natural gas-fueled reciprocating internal combustion engine (RICE) electrical power generator housed in a new enclosed utility building located within the TCS evaporation ponds fence line. Auxiliary equipment planned for installation at the TCS evaporation ponds (e.g., lighting, controls, sensors, security cameras, and valve actuators) will be supplied with 24-volt direct current (VDC) power by new thermoelectric generators (TEGs) installed in a secure fenced area adjacent to the new utility building. A transfer switch will provide for the flexibility of supplying power to the auxiliary equipment from the RICE.

For the freshwater supply well (HNWR-1A) in Arizona, the power supply source will be power provided by Mohave Electric Cooperative. The primary power supply for the long-term remedy support area at Moabi Regional Park will be provided by the City of Needles.

Secondary power supply will be power generated from small photovoltaic solar panels at the workshop building and parking shade structure at Moabi Regional Park for the long-term remedy support area at Moabi Regional Park, and at select remote well locations. Backup power will also be provided for the long-term remedy support area at Moabi Regional Park, if needed, via an on-site diesel generator (Kohler Power Systems 200REOZJF) with an integral, double-walled fuel tank.

A potential failure is the temporary loss of power to the groundwater remedy infrastructure such as pumps and control systems. This could be caused by damage to the power generation equipment or transmission system. The failure modes anticipated would all be repairable in a period of days to weeks. Because the remedy performance is not anticipated to be affected significantly by equipment outages of that duration, the power supply failure modes evaluated are not anticipated to significantly affect remedy schedule or performance.

To mitigate the risk of even temporary power outages, the electrical equipment used in the remedy is designed for the site conditions; site security is provided to minimize risk of vandalism, and an uninterruptible power supply (UPS) is provided for key equipment such as control systems.

Table 2.4-1 presents the FMEA matrix for the power supply system.

2.5 Remedy SCADA, Control Systems, and Instrumentation

The Remedy SCADA system provides operator control, remote access, data logging, and alarm notification for the groundwater remedy. Field instrumentation measures various process data and transmits these data to programmable logic controllers (PLCs). PLCs are industrial computerized controllers that gather this process data and use process-specific algorithms to provide automated control of the groundwater remedy system. Additionally PLCs are used to concentrate hardwired data signals and transmit them to the central SCADA control center via communications network links. The operator interface terminals (OITs) or human/machine interfaces (HMIs) provide graphical displays representing current and historical process data and provides for operator interaction with the process, adjustment to the automation system, and trending of historical data. The final remedy will include field instrumentation and PLCs for each process area or well site tied together via wires, fiber optic communications, radio transmission, or other wireless communications methods, as well as multiple OITs/HMIs to allow operators to interact with various aspects of the groundwater remedy system.

The design objectives of the Remedy SCADA, instrumentation, and control systems are to reliably provide automatic and remote control/monitoring of the groundwater remedy system components, and to reliably record data that are needed for operations and compliance reporting.

A potential failure evaluated is damage to the Remedy SCADA system that causes temporary loss of the ability to view system performance, send/receive control signals from the control room, and log system data. This could have various causes such as hardware or software failures due to site environmental conditions or vandalism, power outages, or damage to communication wiring. Such potential failures are not anticipated to significantly affect remedy schedule or performance.

To mitigate the risk of even temporary loss of Remedy SCADA, instrumentation, and controls systems functions, the Remedy SCADA and instrumentation equipment used in the remedy will be designed for the site conditions, equipment spares will be stocked on-site for critical control equipment, site security to protect against vandalism will be provided, and externally powered instruments will be connected to UPS-fed circuits.

Table 2.5-1 presents the FMEA matrix for the Remedy SCADA, control systems, and instruments.

2.6 Enhanced Evaporation at TCS Evaporation Ponds

One of the management options identified for remedy-produced water is disposal at the existing TCS evaporation ponds (other options include injection into the IRZ wells, re-use in cooling towers, and off-site disposal). Water accumulated in the ponds will evaporate over time. In the event that the ponds are full (i.e., water level in the ponds reaches the maximum level allowed by the Regional Water Quality Control Board), and injection into the IRZ wells and re-use in the cooling towers are not feasible or available, water can also be trucked off-site via the truck loading station at the ponds (or other stations at TCS, Transwestern Bench, MW-20 Bench, or the point of generation [i.e., well sites, etc.]). The preferred method of water disposal is evaporation; therefore, a new drip system and agitators will be installed to enhance evaporation at the ponds. Further, the existing truck loading station will also be improved to support off-site trucking of water or discharge of water to the ponds, if needed. Table 2.6-1 presents the FMEA matrix for the evaporation pond enhancements system.

TABLE 2.1-1
Failure Mode Effect Analysis Matrix - In-Situ Remediation System
Groundwater Remedy Operation and Maintenance Manual
Volume 3: Contingency Plan
PG&E Topock Compressor Station, Needles, California

Potential Failure and Effect without Mitigation	Potential Cause	Mitigation - Design	Mitigation - Operations				Severity (1 Low - 5 High)	Likelihood (1 Low - 5 High)	Severity x Likelihood	Type of Unacceptable Condition					Notes
			Mitigation	Observable Condition		Action if Cause Occurs				A. Unacceptable Remedy Performance	B. Significant Schedule Increase	C. Significant Cost Increase	D. Change to Impact	E. H&S or Compliance NOV (other than related to remedy performance)	
				Remedy SCADA	Human										
Conveyance (General)															
Release from conveyance pipeline. Effect Without Mitigation: Potential release of water with Cr(VI), carbon substrate, and/or well/pipeline maintenance chemicals.	Differential thermal expansion or settlement, deterioration, vandalism, puncture; pressure exceedance; fabrication failure.	Overall pipeline design for durability over project lifetime; secondary containment (double-wall pipe or concrete trench box) with appropriately-designed leak detection systems (see Appendix C - Design Criteria, Section C.5.1 - Piping); redundant/spare pipe installed (or spare space provided for additional pipe); pipe installed within concrete trench box or direct buried without stacking to facilitate access.	Flow monitoring	Alarm conditions - secondary containment sump alarms; out-of-range process alarms (i.e., pipeline flows or pressures)	Observe leak	Stop pipeline operation, switch to spare pipeline and/or repair /replace pipeline, resume operation.	4	1	4					X	Type E unacceptable condition associated with potential environmental release.
Conveyance fouling/clogging. Effect without Mitigation: Potentially insufficient capacity to support remedy.	Solids buildup (i.e., scaling, biofouling).	Overall system/pipeline design to minimize solids buildup; clean-in-place system and cleanouts for pipeline maintenance (see Operations and Maintenance Plan, Section 5 - Pipeline Maintenance); redundant/spare pipe installed (or spare space provided for additional pipe); pipe installed within concrete trench box or direct buried without stacking to facilitate access.	Pipeline pressure/flow monitoring	Pipeline pressure/flow monitoring and data-logging	Significant increase in pipeline pressure or decrease in flow; observed clogging	Stop pipeline operation, switch to spare pipeline and/or clean/repair /replace pipeline, resume operation.	2	3	6						
Pipeline maintenance chemical/fluid release to wells. Effect without Mitigation: Release of chemicals, solids, etc. into wells and groundwater.	Valving between wells and conveyance not closed during pipeline maintenance.	Clean-in-place system programmed to require automated wellhead valves to be closed prior to operation.	Operator training; wellhead/pipeline inspection during maintenance	Well pressure/flow monitoring and data-logging; wellhead valve position monitoring	Loss of pipeline maintenance solution; observed well flows during pipeline maintenance	Well rehab (Operations and Maintenance Plan, Section 4 - Well Maintenance)	2	2	4						

TABLE 2.1-1
Failure Mode Effect Analysis Matrix - In-Situ Remediation System
Groundwater Remedy Operation and Maintenance Manual
Volume 3: Contingency Plan
PG&E Topock Compressor Station, Needles, California

Potential Failure and Effect without Mitigation	Potential Cause	Mitigation - Design	Mitigation - Operations				Severity (1 Low - 5 High)	Likelihood (1 Low - 5 High)	Severity x Likelihood	Type of Unacceptable Condition					Notes
			Mitigation	Observable Condition		Action if Cause Occurs				A. Unacceptable Remedy Performance	B. Significant Schedule Increase	C. Significant Cost Increase	D. Change to Impact	E. H&S or Compliance NOV (other than related to remedy performance)	
				Remedy SCADA	Human										
Remediation Wells (General) - see also Table 2.2-1, Failure Mode Effect Analysis Matrix - Remedy-produced Water Management System															
Extraction well failure. Effect without Mitigation: The well will not be able to contribute to meeting extraction rate/remedy goals.	Capacity declines over time due to fouling or other well issues.	See Appendix C - Design Criteria (Remediation Well Design and Field Construction Approach) and Operations and Maintenance Plan, Section 4 - Well Maintenance - Extraction wells designed to optimize performance - Extraction wells designed to facilitate periodic well rehab - Remedy operations to minimize substrate and remedial by-product concentrations at extraction wells to minimize fouling	Remediation/monitoring well performance monitoring; periodic well rehab (Operations and Maintenance Plan, Section 4 - Well Maintenance)	Well water level/flow monitoring and data-logging	Insufficient capacity of produced water based on remediation/ monitoring well performance monitoring and evaluation	If well maintenance efforts ineffective - stop well operation, repair or replace, resume operation.	2	3	6						
	Well collapse or casing/screen failure (from deterioration, corrosion, etc.), vandalism, accidental damage, etc.	See Appendix C - Design Criteria (Remediation Well Design and Field Construction Approach) - Overall well design for durability over project lifetime - materials selection for resistance against corrosion, deterioration, and damage during routine operation and well rehab - Wells secured within vaults for protection	Visual well inspections	Alarm condition - out-of-range well operation	Observe damage	Stop well operation, repair or replace, resume operation.	2	1	2						
Injection well failure. Effect without Mitigation: The well will not be able to contribute to meeting injection rate/remedy goals.	Capacity declines over time.	See Appendix C - Design Criteria (Remediation Well Design and Field Construction Approach) and Operations and Maintenance Plan, Section 4 - Well Maintenance - Injection wells designed to optimize performance - drop tubes to minimize air entrainment - Injection wells designed to facilitate routine backwashing and periodic well rehab	Remediation/monitoring well performance monitoring; periodic well backwashing and rehab (Operations and Maintenance Plan, Section 4 - Well Maintenance)	Well water level/pressure/flow monitoring and data-logging	Insufficient capacity of injected water based on remediation/ monitoring well performance monitoring and evaluation	If well maintenance efforts ineffective - stop well operation, repair or replace, resume operation.	2	3	6						
	Well collapse or casing/screen failure (from deterioration, corrosion, etc.), vandalism, accidental damage, etc.	See Appendix C - Design Criteria (Remediation Well Design and Field Construction Approach) - Overall well design for durability over project lifetime - materials selection for resistance against corrosion, deterioration, and damage during routine operation and well rehab - Wells secured within vaults for protection	Visual well inspections	Alarm condition - out-of-range well operation	Observe damage	Stop well operation, repair or replace, resume operation.	2	1	2						
Release from wellhead, piping, or vault. Effect Without Mitigation: Potential release of water with Cr(VI), carbon substrate, and/or well/pipeline maintenance chemicals.	Differential thermal expansion, deterioration, vandalism, puncture; pressure exceedance; fabrication failure.	Overall wellhead design for durability over project lifetime; wells secured within vaults for protection; leak detection level switch in vault sump to alarm/stop well operation	Visual well/vault inspections	Alarm condition - well vault sump level switch; out-of-range well operation	Observe leak	Stop well operation, repair, resume operation.	4	1	4					X	Type E unacceptable condition associated with potential environmental release.
	Injection well overflows.	Downwell pressure transducer to shut off well if excessive water level/pressure increase; leak detection level switch in vault sump to alarm/stop well operation; overall injection system designed for flow/pressure balancing across network to minimize potential for well overflow	Visual well/vault inspections; preventative well maintenance (Operations and Maintenance Plan, Section 4 - Well Maintenance)	Alarm condition - well vault sump level switch; out-of-range well operation	Observe leak	Stop well operation, make repairs (as necessary), troubleshoot injection well capacity issues, as necessary - rehab/redevelop well (Operations and Maintenance Plan, Section 4 - Well Maintenance)	4	1	4					X	
Remediation well equipment, valving, instrumentation failure (other than above). Effect without Mitigation: Potential well damage or undesired operation.	Mechanical or electrical failure; general wear and tear; temperature.	Valves/instruments designed to fail in safest position; redundant controls/alarms; well casing relief valves to protect injection wells in case of excess pressure; common equipment/onsite spares for wells to facilitate troubleshooting	Preventative maintenance schedule; visual well/vault inspections	Alarm condition - well vault sump level switch; out-of-range well operation	Observe leak or out-of-range well operation	Stop well operation, repair, resume operation.	2	2	4						

TABLE 2.1-1
Failure Mode Effect Analysis Matrix - In-Situ Remediation System
Groundwater Remedy Operation and Maintenance Manual
Volume 3: Contingency Plan
PG&E Topock Compressor Station, Needles, California

Potential Failure and Effect without Mitigation	Potential Cause	Mitigation - Design	Mitigation - Operations				Severity (1 Low - 5 High)	Likelihood (1 Low - 5 High)	Severity x Likelihood	Type of Unacceptable Condition					Notes
			Mitigation	Observable Condition		Action if Cause Occurs				A. Unacceptable Remedy Performance	B. Significant Schedule Increase	C. Significant Cost Increase	D. Change to Impact	E. H&S or Compliance NOV (other than related to remedy performance)	
				Remedy SCADA	Human										
Carbon Amendment System (MW-20 Bench)															
General carbon amendment system failure. Effect without Mitigation: Unable to operate parts or all of groundwater recirculation and carbon amendment systems to support remedy.	Equipment, valving, instrumentation failure	Valves/instruments that can result in a release if a fail-safe return is not provided are designed to fail in safest position; redundant controls/alarms; common equipment/onsite spares to facilitate troubleshooting; secondary containment at bench systems.	Visual inspections and preventative maintenance schedule	Alarm condition - out-of-range system operation; sump level alarm	Observed failure condition	Stop system operation, repair, resume operation.	3	2	6						
Carbon substrate storage and/or feed system failure. Effect without Mitigation: Potential release of flammable liquid; unable to amend recirculated groundwater with carbon substrate; potential over-dosing of carbon substrate to injection wells.	Human error	See Appendix C - Design Criteria, C.5.7 - Fire Protection Equipment and Final Basis of Design Report, Section 3.2.1.1 - Description of NTH IRZ (Organic Carbon Substrate Amendment System [MW-20 Bench]) - System designed in accordance with all applicable codes for flammable liquids - Overall system design for durability over project lifetime, including materials selection for compatibility, corrosion control, impact/damage protection - Storage tank has impact-resistant construction and double-wall construction with integral interstitial zone for leak detection monitoring - Instrumentation to include: tank interstitial space fluid level sensors, primary tank level transmitter with manual gauging port for operator verification, primary tank fluid temperature sensor, visible beacon/audible alarm within bench areas to notify operators of high level during tank filling, pipeline secondary containment leak detection system - Double-wall tank and piping systems with additional secondary containment in process/filling area - Valves/instruments designed to fail in safest position - Redundant controls/alarms - Fire extinguishers to be located at bench system in accordance with applicable codes - Security fencing/traffic bollards	Visual inspections and preventative maintenance schedule; operator training	Alarm condition - leak detection/ secondary containment alarm; tank overfill alarm; out-of-range system operation (i.e., over- or under-dosing)	Observe failure condition	Stop system operation, repair, replace, or otherwise resolve failure, resume system operation; manual carbon substrate dosing at system or individual wells, if necessary	5	2	10			X		X	Type C/E unacceptable conditions associated with potential cost/H&S issues with flammable liquid storage and handling.
	Physical impact from vehicles														
	Equipment, valving, instrument failure														
	Corrosion, puncture, deterioration, accidental damage														
	Vandalism														

TABLE 2.1-1
Failure Mode Effect Analysis Matrix - In-Situ Remediation System
Groundwater Remedy Operation and Maintenance Manual
Volume 3: Contingency Plan
PG&E Topock Compressor Station, Needles, California

Potential Failure and Effect without Mitigation	Potential Cause	Mitigation - Design	Mitigation - Operations				Severity (1 Low - 5 High)	Likelihood (1 Low - 5 High)	Severity x Likelihood	Type of Unacceptable Condition					Notes
			Mitigation	Observable Condition		Action if Cause Occurs				A. Unacceptable Remedy Performance	B. Significant Schedule Increase	C. Significant Cost Increase	D. Change to Impact	E. H&S or Compliance NOV (other than related to remedy performance)	
				Remedy SCADA	Human										
NTH IRZ															
IRZ is not effective at removing Cr(VI) from groundwater as designed. Effect without Mitigation: Potential schedule/cost increase or other issues with achieving RAOs as designed.	More rapid utilization of carbon substrate after injection than anticipated.	Design included pilot testing, predictive simulations/modeling, and additional design efforts; system designed with flexibility for range of operating flow rates and carbon substrate types and dosing strategies; future provisional wells have been included in the design, if needed; flexibility retained in the design to adjust locations of provisional wells; manual carbon substrate dosing can target individual wells if needed to supplement IRZ-wide dosing; River Bank Extraction Wells are designed to capture downgradient Cr(VI), TOC, and/or byproducts, as needed; system designed with flexibility to re-direct extracted water from TCS Recirculation Loop to NTH IRZ (if system is flow limited)	See Sampling and Monitoring Plan, Decision Rules/Operational Framework (Figures 2.2-2 and 2.2-3) for IRZ performance troubleshooting and operational adaptability philosophy to be conducted based on remedial performance monitoring/evaluation and using the designed system flexibility - operational adjustments may include flow rates, carbon substrate type and dosing strategy, number and location of operating wells, injection of water from the TCS Recirculation Loop into the NTH IRZ (if system is flow limited), etc. River Bank Extraction Wells, Inner Recirculation Loop Injection Wells, and Freshwater Injection Wells may be slowed or shut down to slow groundwater flow rate during NTH IRZ troubleshooting.		See Sampling and Monitoring Plan and Operations and Maintenance Plan for summary of remedy monitoring and how data will be evaluated/applied to remedy system optimization	If operational adjustments outlined in Sampling and Monitoring Plan, Decision Rules/Operational Framework (Figures 2.2-2 and 2.2-3) are not successful in establishing IRZ effectiveness - additional extraction/injection wells or water sources (if system is flow limited) will be considered	4	2	8	X	X	X	X		Unacceptable conditions associated with potential increased level of effort required to achieve remedy performance objectives.
	Well spacing or screen placement is inadequate.						4	2	8	X	X	X	X		
	Recalcitrant mass in immobile porespace.						4	2	8	X	X	X	X		
	Unexpected hydrogeologic conditions (e.g., preferential flow paths allow water to pass through IRZ without adequate treatment).						4	3	12	X	X	X	X		
	Extraction/injection flow limited.						4	2	8	X	X	X	X		
Extraction of organic carbon and/or significant byproducts. Effect without Mitigation: Potential to increase well/pipeline maintenance required to meet remedy goals.	Carbon substrate dosing greater than required.					If operational adjustments outlined in Sampling and Monitoring Plan, Decision Rules/Operational Framework (Figures 2.2-2 and 2.2-3) are not successful in managing organic carbon or by-product concentrations at extraction wells - additional wells or water sources (if system is flow limited) will be considered; treatment of riverbank extracted groundwater prior to re-injection will be considered.	4	2	8			X			
	By-product generation greater than expected/attenuation slower than expected						4	2	8			X			

TABLE 2.1-1
Failure Mode Effect Analysis Matrix - In-Situ Remediation System
Groundwater Remedy Operation and Maintenance Manual
Volume 3: Contingency Plan
PG&E Topock Compressor Station, Needles, California

Potential Failure and Effect without Mitigation	Potential Cause	Mitigation - Design	Mitigation - Operations: Mitigation	Mitigation - Operations: Observable Condition: Remedy SCADA	Mitigation - Operations: Observable Condition: Human	Mitigation - Operations: Action if Cause Occurs	Severity (1 Low - 5 High)	Likelihood (1 Low - 5 High)	Severity x Likelihood	Type of Unacceptable Condition: A. Unacceptable Remedy Performance	B. Significant Schedule Increase	C. Significant Cost Increase	D. Change to Impact	E. H&S or Compliance NOV (other than related to remedy performance)	Notes
Inner Recirculation Loop - see also Table 2.3-1, Failure Mode Effect Analysis Matrix - Freshwater Supply															
Unacceptable migration of Cr(VI) or byproducts. Effect without Mitigation: Potential for Cr(VI) or byproducts to enter the Colorado River; potential plume expansion.	Unexpected hydrogeologic conditions.	Design included pilot testing, predictive simulations/modeling, and additional design efforts; system designed with flexibility for range of operating flow rates and carbon substrate type and dosing strategy; Inner Recirculation Loop Injection Wells designed for flexibility to inject freshwater and/or riverbank extracted groundwater[1]; future provisional wells have been included in the design, if needed; flexibility retained in the design to adjust locations of provisional wells	See Sampling and Monitoring Plan, Decision Rules/Operational Framework (Figures 2.2-4 and 2.2-5) for IRL performance troubleshooting and operational adaptability philosophy to be conducted based on remedial performance monitoring/evaluation and using the designed system flexibility - operational adjustments may include flow rates, carbon substrate type and dosing strategy, number and location of operating wells, injection of freshwater and/or riverbank extracted groundwater into Inner Recirculation Loop Injection Wells[1], etc.		See Sampling and Monitoring Plan and Operations and Maintenance Plan for summary of remedy monitoring and how data will be evaluated/applied to remedy system optimization	If operational adjustments outlined in Sampling and Monitoring Plan, Decision Rules/Operational Framework (Figures 2.2-4 and 2.2-5) are not successful in establishing adequate plume control or plume flushing - additional extraction/injection wells (including wells to the south of RB-5), River Bank Extraction Well pumping from shallow zones, or additional water sources (if system is flow limited) will be considered, as needed, to limit new large-capacity extraction wells; additional mitigation measures, including potential treatment of riverbank extracted groundwater prior to re-injection, will be considered; construction sequence may also be changed to prioritize installation of River Bank Extraction Wells (with possible carbon amendment and injection of extraction groundwater into the NTH IRZ), if needed	4	3	12	X		X	X		Unacceptable conditions associated with potential increased level of effort required to achieve remedy performance objectives.
	Well spacing or screen placement is inadequate.						4	2	8	X		X	X		
	New large-capacity wells (e.g., water supply wells) are installed near the site (e.g., at Park Moabi or elsewhere along the Colorado River).						4	2	8	X		X	X		
Flushing of plume through NTH IRZ not as effective as designed. Effect without Mitigation: Potential schedule delay.	Unexpected hydrogeologic conditions.						4	3	12		X	X	X		
	Well spacing or screen placement is inadequate.						4	2	8	X		X	X		
	Lack of adequate supply of injection water (e.g., River Bank Extraction Well produced water contains unacceptably high concentrations of byproducts/other constituents).						4	2	8		X	X	X		
Natural reducing rind near river is negatively-impacted by pumping resulting in inadequate reducing buffer in floodplain. Effect without Mitigation: Could affect ability to rely on MNA for residual contamination when active remediation ends.	Oxic water from the river being pulled into floodplain by extraction wells near the river	Design included pilot testing, predictive simulations/modeling, and additional design efforts; system designed with flexibility for range of operating flow rates; River Bank Extraction Well pumping planned for deeper zones only				If operational adjustments are not successful in adequately maintaining the natural reducing rind - assess potentially required remedy modifications	2	2	4						

TABLE 2.1-1
Failure Mode Effect Analysis Matrix - In-Situ Remediation System
Groundwater Remedy Operation and Maintenance Manual
Volume 3: Contingency Plan
PG&E Topock Compressor Station, Needles, California

Potential Failure and Effect without Mitigation	Potential Cause	Mitigation - Design	Mitigation - Operations: Mitigation	Mitigation - Operations: Observable Condition: Remedy SCADA	Mitigation - Operations: Observable Condition: Human	Mitigation - Operations: Action if Cause Occurs	Severity (1 Low - 5 High)	Likelihood (1 Low - 5 High)	Severity x Likelihood	Type of Unacceptable Condition: A. Unacceptable Remedy Performance	B. Significant Schedule Increase	C. Significant Cost Increase	D. Change to Impact	E. H&S or Compliance NOV (other than related to remedy performance)	Notes
TCS Recirculation Loop															
Transwestern Bench Extraction Well network does not provide adequate volume or mass removal. Effect without Mitigation: Potential schedule delay as impacted water near TCS not treated as rapidly as planned.	Unexpected hydrogeologic conditions.	Design included pilot testing, predictive simulations/modeling, and additional design efforts; system designed with flexibility for range of operating flow rates and carbon substrate type and dosing strategy; future provisional wells have been included in the design, if needed; flexibility retained in the design to adjust locations of provisional wells; River Bank Extraction Wells are designed to capture downgradient Cr(VI), TOC, and/or byproducts, as needed; system designed with flexibility to re-direct extracted water from TCS Recirculation Loop to NTH IRZ (if system is limited by ability to inject into TCS Injection Wells)	See Sampling and Monitoring Plan, Decision Rules/Operational Framework (Figures 2.2-6 to 2.2-8) for TCS Recirculation Loop performance troubleshooting and operational adaptability philosophy to be conducted based on remedial performance monitoring/evaluation and using the designed system flexibility - operational adjustments may include flow rates, carbon substrate type and dosing strategy, number and location of operating wells, etc.; Transwestern Bench and East Ravine extracted groundwater may be injected into NTH IRZ (if system is limited by ability to inject into TCS Injection Wells).		See Sampling and Monitoring Plan and Operations and Maintenance Plan for summary of remedy monitoring and how data will be evaluated/applied to remedy system optimization	If operational adjustments outlined in Sampling and Monitoring Plan, Decision Rules/Operational Framework (Figures 2.2-6 to 2.2-8) are not successful in achieving design objectives - additional extraction/injection wells or water sources (if system is flow limited) will be considered, including the use of fresh water to supplement injections into the TCS Injection Wells - a plan for constructing arsenic monitoring wells and establishing baseline arsenic conditions including prior carbon injections in the area would be required prior to injecting fresh water into the TCS Injection Wells.	4	3	12		X	X	X		
	Well spacing or screen placement is inadequate.						4	2	8		X	X	X		
	Extraction/injection flow limited.						4	2	8		X	X	X		
East Ravine Extraction Well network does not provide capture of targeted groundwater, as designed. Effect without Mitigation: Potential expansion of plume or Cr(VI) release to Colorado River.	Unexpected hydrogeologic conditions.						4	3	12	X	X	X	X		Unacceptable conditions associated with potential increased level of effort required to achieve remedy performance objectives.
	Well spacing or screen placement is inadequate.						4	2	8	X	X	X	X		
	Extraction/injection flow limited.						4	2	8	X	X	X	X		
Cr(VI) treatment by TCS Injection Well network not as effective as designed. Effect without Mitigation: Potential schedule delay.	Unexpected hydrogeologic conditions.						4	3	12		X	X	X		
	More rapid utilization of carbon substrate after injection than anticipated.						4	2	8		X	X	X		
	Well spacing or screen placement is inadequate.						4	2	8		X	X	X		
	Extraction/injection flow limited.						4	2	8		X	X	X		

TABLE 2.1-1
Failure Mode Effect Analysis Matrix - In-Situ Remediation System
Groundwater Remedy Operation and Maintenance Manual
Volume 3: Contingency Plan
PG&E Topock Compressor Station, Needles, California

Potential Failure and Effect without Mitigation	Potential Cause	Mitigation - Design	Mitigation - Operations: Mitigation	Mitigation - Operations: Observable Condition: Remedy SCADA	Mitigation - Operations: Observable Condition: Human	Mitigation - Operations: Action if Cause Occurs	Severity (1 Low - 5 High)	Likelihood (1 Low - 5 High)	Severity x Likelihood	Type of Unacceptable Condition: A. Unacceptable Remedy Performance	B. Significant Schedule Increase	C. Significant Cost Increase	D. Change to Impact	E. H&S or Compliance NOV (other than related to remedy performance)	Notes
Freshwater Injection System - see also Table 2.3-1, Failure Mode Effect Analysis Matrix - Freshwater Supply															
Flushing of plume through NTH IRZ not as effective as designed. Effect without Mitigation: Potential schedule delay.	Unexpected hydrogeologic conditions.	Design included pilot testing, predictive simulations/modeling, and additional design efforts; system designed with flexibility for range of operating flow rates	See Sampling and Monitoring Plan, Figure 2.2-9 Freshwater Injection System Decision Rules/Operational Framework for freshwater injection performance troubleshooting and operational adaptability philosophy to be conducted based on remedial performance monitoring/evaluation and using the designed system flexibility - operational adjustments may include flow rates, number and location of operating wells, etc.; TCS injections may be adjusted or shut down if FW-02 is not operating as intended		See Sampling and Monitoring Plan and Operations and Maintenance Plan for summary of remedy monitoring and how data will be evaluated/applied to remedy system optimization	If operational adjustments outlined in Sampling and Monitoring Plan, Figure 2.2-9 Freshwater Injection System Decision Rules/Operational Framework are not successful in achieving design objectives - additional injection wells will be considered	4	3	12		X	X	X		Unacceptable conditions associated with potential increased level of effort required to achieve remedy performance objectives.
	Well or screen placement is inadequate.						4	2	8		X	X	X		
	Lack of adequate supply of injection water.						4	2	8		X	X	X		
Insufficient FW-02 performance to maintain control of southwestern plume margin. Effect without Mitigation: Potential plume expansion.	Unexpected hydrogeologic conditions.						4	3	12	X					
	Well or screen placement is inadequate.						4	2	8	X					
	Lack of adequate supply of injection water.						4	2	8	X					
Analytical data collected from freshwater arsenic monitoring wells located 225 feet from freshwater injection locations indicate arrival of arsenic plume above the 10 µg/L water quality objective. Effect without Mitigation: Per the California State Water Resources Control Board (SWRCB) letter to DTSC (SWRCB 2013), PG&E is required to cease injection of untreated water and either 1) add pre-treatment or 2) use a freshwater source without arsenic if data collected from freshwater arsenic monitoring wells located 225 feet from freshwater injection locations indicate arrival of arsenic plume above the 10 µg/L water quality objective. Modeling calculations will be re-assessed and these or other actions may also be considered for implementation if data collected from freshwater arsenic monitoring wells located 150 feet from freshwater injection locations indicate arrival of the leading edge of the arsenic plume above the 10 µg/L water quality objective.	Unexpected hydrogeologic/ geochemical conditions.	Design included pilot testing, predictive simulations/modeling and additional design efforts; system designed with flexibility for range of operating flow rates	Sampling of freshwater arsenic monitoring wells located 150 feet from freshwater injection locations. If data from these wells indicate arrival of the leading edge of the arsenic plume above the 10 µg/L water quality objective, modeling calculations will be re-assessed and operational adjustments may include flow rates, number and location of Inner Recirculation Loop Injection Wells operating with fresh water versus riverbank extracted groundwater[1], aeration of fresh water prior to injection to reduce arsenic mobility, etc. (see Sampling and Monitoring Plan, Section 2.2.4)		See Sampling and Monitoring Plan and Operations and Maintenance Plan for summary of remedy monitoring and how data will be evaluated/applied to remedy system optimization	If operational adjustments/interim actions discussed in Sampling and Monitoring Plan, Section 2.2.4 are not successful in achieving design objectives - implementation of the freshwater pre-injection treatment system (see also Section 2.3) for freshwater arsenic treatment and/or additional/alternative freshwater sources will be implemented per the SWRCB letter to DTSC (SWRCB 2013).	4	2	8		X	X			Type B/C unacceptable condition associated with potential schedule/cost increases.

TABLE 2.1-1
Failure Mode Effect Analysis Matrix - In-Situ Remediation System
Groundwater Remedy Operation and Maintenance Manual
Volume 3: Contingency Plan
PG&E Topock Compressor Station, Needles, California

Potential Failure and Effect without Mitigation	Potential Cause	Mitigation - Design	Mitigation - Operations			Severity (1 Low - 5 High)	Likelihood (1 Low - 5 High)	Severity x Likelihood	Type of Unacceptable Condition					Notes
			Mitigation	Observable Condition		Action if Cause Occurs									
				Remedy SCADA	Human										
In-Situ Remediation System (General)															
Aerial or vertical extent of Cr(VI) plume greater than currently defined. Effect without Mitigation: Potential expansion of remedy footprint.	Inadequate characterization of Cr(VI) in groundwater	Groundwater characterization efforts to date indicate it is unlikely that significant Cr(VI) concentrations exist outside of currently-defined plume footprint. Remedy system design includes some flexibility to expand outside of planned footprint, if needed. See Chapter 5 of the Construction/Remedial Action Work Plan for the Construction Contingency Plan/Procedures.	Installation of remediation and monitoring wells will be conducted in a step-wise manner with a focus on first gathering lithologic data, then water quality data, before finalizing well locations/well screen intervals and installing wells. Well construction will also consider previous well data to ensure the latest data is used in the well installation process.			Assess potentially required remedy modifications, including system expansion	4	2	8			X	X		Unacceptable conditions associated with potential cost increase/additional CEQA analysis required due to expansion of remedy footprint.
Cr(III) re-oxidation to Cr(VI) after in-situ treatment. Effect without Mitigation: Potential issues with achieving RAOs as designed.	Unexpected high availability of reactive MnO_2 surfaces along groundwater flow path.	Design included pilot testing, predictive simulations/modeling, and additional design efforts that indicated significant re-oxidation of Cr(III) to Cr(VI) is unlikely	See Sampling and Monitoring Plan, Decision Rules/Operational Framework (Figures 2.2-2 to 2.2-9) for remedy performance troubleshooting and operational adaptability philosophy to be conducted based on remedial performance monitoring/evaluation and using the designed system flexibility such as adjusting operational flow rates, organic carbon dosing strategy, etc.		See Sampling and Monitoring Plan and Operations and Maintenance Plan for summary of remedy monitoring and how data will be evaluated/applied to remedy system optimization	Assess potentially required remedy modifications	1 to 4	1	1 to 4	X	X	X	X		Unacceptable conditions associated with potential increased level of effort required to achieve remedy performance objectives.
Changes in aquifer pH not adequately buffered. Effect without Mitigation: Potential issues with achieving RAOs as designed.	Inadequate groundwater and/or biogeochemical characterization	Design included pilot testing and predictive simulations/modeling that indicated significant change in pH is unlikely				Assess potentially required remedy modifications	1 to 3	1	1 to 3						
In-situ remedy byproduct (arsenic) concentrations do not sufficiently attenuate. Effect without Mitigation: Potential issues with achieving RAOs as designed.		Design included pilot testing, predictive simulations/modeling, and additional design efforts that indicate sufficient byproduct attenuation following remedy operation				Assess potentially required remedy modifications, including potential treatment of extracted riverbank groundwater prior to re-injection	1 to 3	1	1 to 3						
In-situ remedy byproduct (manganese) concentrations do not sufficiently attenuate. Effect without Mitigation: Potential issues with achieving RAOs as designed.							1 to 3	1	1 to 3						
In-situ remedy byproduct (iron) concentrations do not sufficiently attenuate. Effect without Mitigation: Potential issues with achieving RAOs as designed.							1 to 3	1	1 to 3						

TABLE 2.1-1
Failure Mode Effect Analysis Matrix - In-Situ Remediation System
Groundwater Remedy Operation and Maintenance Manual
Volume 3: Contingency Plan
PG&E Topock Compressor Station, Needles, California

Potential Failure and Effect without Mitigation	Potential Cause	Mitigation - Design	Mitigation - Operations			Severity (1 Low - 5 High)	Likelihood (1 Low - 5 High)	Severity x Likelihood	Type of Unacceptable Condition					Notes
			Mitigation	Observable Condition		Action if Cause Occurs									
				Remedy SCADA	Human				A. Unacceptable Remedy Performance	B. Significant Schedule Increase	C. Significant Cost Increase	D. Change to Impact	E. H&S or Compliance NOV (other than related to remedy performance)	
Natural Disaster														
Seismic damage. Effect without Mitigation: Damage to remedy infrastructure may cause shutdown of parts or all of remedy.	Earthquake	See Appendix C - Design Criteria, C.3.5 - Seismic Loads - Structures will be designed in accordance with applicable seismic codes		Alarm conditions will shut system down if significant damage	Observed failure condition	Stop system operation, inspect system, repair/replace system infrastructure (as needed), resume system operation	varies	1	varies		X	X			Type B/C unacceptable condition associated with potential schedule/cost increases.
Flooding. Effect without Mitigation: Damage to remedy infrastructure may cause shutdown of parts or all of remedy; potential loss of access.	Rising water levels in Colorado River and/or extreme rain events	Remedy infrastructure located outside of ordinary high water mark and 100-year floodplain to the extent possible; system can be operated/shutdown remotely if access limited	Preventative system shutdown or other action if flood conditions predicted	Alarm conditions will shut system down if significant flooding (sump levels)/ damage	Observed failure condition		varies	1	varies		X	X			Type B/C unacceptable condition associated with potential schedule/cost increases.
Fire damage. Effect without Mitigation: Damage to remedy infrastructure may cause shutdown of parts or all of remedy.	Wildfires/vegetation fires; Compressor station or gas pipeline explosion	System can be operated/shutdown remotely if access limited	Routine vegetation clearing/housekeeping in remedy facility areas; preventative system shutdown or other actions if fires in area	Alarm conditions will shut system down if significant damage	Observed failure condition		varies	1	varies		X	X			Type B/C unacceptable condition associated with potential schedule/cost increases.
Freezing conditions. Effect without Mitigation: Potential damage to remedy infrastructure may cause shutdown of parts or all of remedy.	Cold temperatures	Site conditions/temperatures unlikely to be cold enough to cause issues.	Preventative system shutdown and system/pipeline draining if freezing temperatures predicted	Alarm conditions will shut system down if significant freezing/ damage	Observed failure condition		1	1	1						
Wind-blow dust damage. Effect without Mitigation: Potential damage to remedy infrastructure may cause shutdown of parts or all of remedy.	Dust, sands, etc. blown by high desert winds	Most remedy infrastructure located within enclosed buildings or vaults.	Preventative maintenance and visual inspection schedule to observe damage	Alarm conditions will shut system down if equipment failure due to dust damage	Observed damage or failure condition		1	2	2						

Abbreviations:
PLC - process logic controller
DOI - United States Department of the Interior
DTSC - Department of Toxic Substances Control
EIR - environmental impact report
H&S - health and safety
NOV - notice of violation
RAO - remedial action objective
TW - Transwestern
IRZ - In-Situ Reactive Zone
NTH - National Trails Highway
TCS - Topock Compressor Station
IRL - Inner Recirculation Loop
MNA - monitored natural attenuation
Cr(VI) - hexavalent chromium
Cr(III) - trivalent chromium
MnO_2 - manganese dioxide
P/V - pressure/vacuum
SWRCB - State Water Resources Control Board
TOC - total organic carbon

Notes:
1. Under the nominal operational scenario, riverbank extracted groundwater will be injected into the lower two-thirds of the saturated interval at IRL-1 and IRL-2. Changes in the wells and/or intervals into which riverbank extracted groundwater is injected will first be discussed with the DTSC and DOI.

TABLE 2.2-1
Failure Mode Effect Analysis Matrix — Remedy-produced Water Management System
Groundwater Remedy Operation and Maintenance Manual
Volume 3: Contingency Plan
PG&E Topock Compressor Station, Needles, California

Potential Failure and Effect without Mitigation	Potential Cause	Mitigation - Design	Mitigation - Operations				Severity (1 Low - 5 High)	Likelihood (1 Low - 5 High)	Severity x Likelihood	Type of Unacceptable Condition					Notes
			Mitigation	Observable Condition		Action if Cause Occurs				A. Unacceptable Remedy Performance	B. Significant Schedule Increase	C. Significant Cost Increase	D. Significant Change to Impacts (Additional CEQA Analysis)	E. H&S or Compliance NOV (other than related to remedy performance)	
				Remedy SCADA	Human										
1. Conditioning System Capacity Insufficient [2,3] Effect without Mitigation: Some water will not be able to be conditioned or re-used/ disposed on-site.	a. Generate more water that must be managed in a single backwash event – Short- term capacity condition	Plant designed for 35 gpm capacity and safety factor applied in sizing storage tanks	Temporarily decrease backwash frequency which would cause an increase in water level in the injection well	Influent flow measurements	N/A	Adjust operations to reduce backwash Investigate root cause and re-evaluate well O&M procedures	1	1	1						In cases resulting in loss of well performance, see the SOPs in the O&M Manual for diagnostic and maintenance procedures.[4]
	b. Wells need more maintenance then anticipated – Long-term capacity condition	Plant designed for 35 gpm capacity and safety factor applied in sizing storage tanks. Process is divided into 2 sides (Remedy A-side and Freshwater B-side) to allow for flexibility in managing conditioned water.	Investigate root cause, re-evaluate well operations, and maintenance procedures (see Section 4). If needed, evaluate the need and methods to increase plant capacity.	Flow transmitters, High well operating level	N/A	Adjust operations to reduce backwash Investigate root cause and re-evaluate well O&M procedures	3	2	6						See Note [1]. Severity depends on downtime and cost.
	c. Excessive load of solids on filters. Frequent filter change-outs	Install tanks to settle solids and turbidity analyzers on conditioned water tanks. Design coarse, then fine filter and standby filters on each train and instrumentation to measure pressure across the filters.	Conduct jar testing for alternative coagulants, to improve settling in tanks. Normal operation is flow through 2-stage filters. Standby filters put into service if operating filter is fouled. Stock spare filters on site	Quick increase in differential pressure across cartridge filters Alarms	Scheduled inspections, check water chemistry for scaling conditions	Well sampling to evaluate influent solids concentrations; Replace cartridges. If scaling, change pH target or add antiscalant	2	1	2						In cases resulting in loss of well performance, see the O&M Manual, Volume 1, Section 4 for diagnostic and maintenance procedures.[4]
	d. Grit build-up in tank	Design capability to pump solids from these tanks to phase separators. Design capability to use vac truck to remove solids.	Operators to monitor solids level	N/A	Operators to monitor solids level	Operators to hose down solids so they'll pump out, or remove by vac truck	1	1	1						
	e. Phase separator bins cannot be removed due to problems with hauling contractor and solids fill up in system. Plant capacity limited or stopped.	N/A	Have backup destination for disposal planned	N/A	N/A	Store full bins on site or at other PG&E facilities	1	1	1						

TABLE 2.2-1
Failure Mode Effect Analysis Matrix — Remedy-produced Water Management System
Groundwater Remedy Operation and Maintenance Manual
Volume 3: Contingency Plan
PG&E Topock Compressor Station, Needles, California

Potential Failure and Effect without Mitigation	Potential Cause	Mitigation - Design	Mitigation - Operations				Severity (1 Low - 5 High)	Likelihood (1 Low - 5 High)	Severity x Likelihood	Type of Unacceptable Condition					Notes
			Mitigation	Observable Condition		Action if Cause Occurs				A. Unacceptable Remedy Performance	B. Significant Schedule Increase	C. Significant Cost Increase	D. Significant Change to Impacts (Additional CEQA Analysis)	E. H&S or Compliance NOV (other than related to remedy performance)	
				Remedy SCADA	Human										
	f. IRZ and other on-site reuse/disposal options do not have the capacity to take all treated water – Short term condition	N/A	Storage	N/A	N/A	Adjust operations	2	1	2						
	g. IRZ and other on-site reuse/disposal options do not have the capacity to take all treated water – Long term condition	N/A	Evaluate alternative re-use options	N/A	N/A	Trucking	3	1	3						.
	h. More wells or higher flow rates are needed to achieve RAOs, which produces more water to manage	Reserve space for additional storage and/or conditioning equipment	N/A	N/A	N/A	N/A	2	1	2						See Note 3.
2. Poor Quality Water to Wells: High or low pH Effect without Mitigation: Out of Spec Water may cause increased well or formation fouling or geochemical changes releasing minerals which could affect IRZ performance or plume composition. Excessive pH either high or low could reduce or change microorganism populations, which in turn could also reduce IRZ performance.	a. Tank eductor failure, and poor mixing of conditioning chemicals	Install redundant tank eductors	N/A	N/A	If chemical addition loses effectiveness at altering pH. Will do periodic visual inspections of educators	Repair or replace	1	1	1						
	b. pH Analyzer Failure	Install analyzers on influent and conditioned water tanks	Periodic calibration and system inspections	High and low alarm	Scheduled inspections and monitoring with handheld meter	N/A	1	1	1						
3. Poor Quality Water to Wells: High Suspended Solids Effect without Mitigation: Increase potential for well fouling which could result in increased well maintenance	Cartridge filter rupture or operator not install cartridge	Install turbidity analyzers on conditioned water tanks	Injection well performance monitoring SOP and RPWC System SOPs.[4] Normal operation is flow through 2-stage filters. Standby filter put into service if operating filter is fouled	Alarms on analyzers	Equipment inspections	Follow well maintenance procedures (Section 4), replace cartridges	2	1	2						

TABLE 2.2-1
Failure Mode Effect Analysis Matrix — Remedy-produced Water Management System
Groundwater Remedy Operation and Maintenance Manual
Volume 3: Contingency Plan
PG&E Topock Compressor Station, Needles, California

Potential Failure and Effect without Mitigation	Potential Cause	Mitigation - Design	Mitigation - Operations: Mitigation	Observable Condition: Remedy SCADA	Observable Condition: Human	Action if Cause Occurs	Severity (1 Low - 5 High)	Likelihood (1 Low - 5 High)	Severity x Likelihood	Type of Unacceptable Condition: A. Unacceptable Remedy Performance	B. Significant Schedule Increase	C. Significant Cost Increase	D. Significant Change to Impacts (Additional CEQA Analysis)	E. H&S or Compliance NOV (other than related to remedy performance)	Notes
4. Poor Quality Water to Wells: Presence of scaling ions: (Ca, Mg, Mn, Fe, etc.) or high pH water Effect without Mitigation: Scaling in pipelines and wells	Presence of ions in well water	Reserve space to add conditioning units, if needed. These contingent units are described in Section 2.2 of this Contingency Plan. Pipe blowoffs and cleanouts are included in the pipelines. May need to add anti-scalants continuously or use other chemical cleaners.	Monitor effluent quality and injection well performance (see additional information in the Notes column).	N/A	N/A	Follow well maintenance procedures (Section 4)	2	2	4						System is not designed for removing dissolved metals. Modify conditioning process if dissolved ions and metals pose or are causing declining well performance. Addition of conditioning methods may be required if pH increase is not effective in removing constituents. More frequent rehabs or backwash at wells that are fouling due to poor effluent water quality.
5. Equipment Failure Effect Without Mitigation: Leak, contamination, personnel exposure	a. Pipe rupture	Select piping material that is appropriate for the liquid being conveyed and is rated for the anticipated operating pressure.	N/A	N/A	Visual	Follow SOPs,[4] and perform repair	2	1	2						
	b. Tank Failure	Install tank vents, barriers to prevent vehicle impact, seismic supports, coatings, corrosion protection system, and secondary containment for tanks	Preventive maintenance	N/A	Visual	Follow SOPs,[4] and perform repair	2	1	2						
	c. Pump Failure	Mech. seals, drainage for leaks and drips, evaluate seal flush system destination, evaluate cavitation potential on low suction head pumps.	Preventive maintenance	Run fail indication	N/A	Follow SOPs[4] for pump and seals, and perform repair	1	1	1						
	d. Filter failure	Install instrumentation to measure pressure across the filters and alarm. Install 2-stage filters (coarse and fine). Set vessel pressure rating to contain “deadhead” pump condition.	Preventive maintenance	Increased pressure across filters	N/A	Follow SOPs,[4] and perform repair/ replace cartridges	1	1	1						
	e. Eductor failure	Install multiple tank eductors. Monitor vacuum on educator to evaluate erosion or fouling.	Preventive maintenance and inspection. Do routine maintenance and adjust procedures and equipment accordingly.	N/A	Visual inspections/ maintenance	Follow SOPs[4] and perform repair/ replace educators.	1	1	1						

TABLE 2.2-1
Failure Mode Effect Analysis Matrix — Remedy-produced Water Management System
Groundwater Remedy Operation and Maintenance Manual
Volume 3: Contingency Plan
PG&E Topock Compressor Station, Needles, California

			Mitigation - Operations							Type of Unacceptable Condition					
				Observable Condition											
Potential Failure and Effect without Mitigation	Potential Cause	Mitigation - Design	Mitigation	Remedy SCADA	Human	Action if Cause Occurs	Severity (1 Low - 5 High)	Likelihood (1 Low - 5 High)	Severity x Likelihood	A. Unacceptable Remedy Performance	B. Significant Schedule Increase	C. Significant Cost Increase	D. Significant Change to Impacts (Additional CEQA Analysis)	E. H&S or Compliance NOV (other than related to remedy performance)	Notes
6. Freezing Effect without mitigation: No fluid flow	Low ambient temperature	Install heat trace for some chemical piping and storage tanks.	Drain system. Other responses include heat tape, wrapping lines with cloth or rags, or placing heat lamps.	N/A	Weather forecast and anticipated outage schedule.	Upgrade freeze protection or change chemical strength or type	2	1	2						Not been a problem historically at TCS or IM-3
7. Spills Effect without Mitigation: Exposure and contamination of soil	Equipment or pipe failure	Provide adequate secondary containment	SOP[4] and training and alarms (also in HMBP, BMPs, SWPPP)	Alarm for pump running and no flow. Secondary containment level alarms	Visual inspections	Drain system, pump to influent storage tanks. Repair leak.	2	1	2						
8. Unexpected constituents/ material by-product in conditioned water Effect without Mitigation: Carry over contaminant to cooling tower or injection wells	a. Not following RPWC SOPs[4]	N/A	Follow the Operation and Maintenance Manual and SOPs	N/A	N/A	Reinforce/training	1	1	1						Examples include, iron, manganese, silica, calcium, magnesium, and biological materials
	b. Unexpected material enters system	N/A	Investigate root cause, re-evaluate well operations, and maintenance procedures (see Section 4)	N/A	N/A	Revise SOPs[4] or process as needed, could modify monitoring procedures.	2	1	2						
9. Lightning Strike Effect without mitigation: Damage to plant may cause shutdown of system. May cause release of produced water or conditioning chemicals	Lightning	Provide lightning protection and adequate secondary containment for tanks and equipment	Maintain appropriate spare parts to minimize downtime. If necessary, can truck offsite or stop backwashing to mitigate downtime of conditioning system.	N/A	Add inspections into SOPs[4] to watch for leaks or overfilling after a strike	Inspect and assess site for damage / mechanical integrity or repair. If necessary, can truck offsite or stop backwashing until repair is done.	2	1	2						
10. Seismic Damage Effect without Mitigation: Damage to plant may cause shutdown of system	Earthquake	Design in accordance with structural design criteria in 90% Basis of Design Report, Appendix C. Provide adequate secondary containment for tanks and equipment	If necessary, can truck offsite or stop backwashing to mitigate downtime of conditioning system.	N/A	N/A	Inspect and assess site for damage / mechanical integrity or repair. If necessary, can truck offsite or stop backwashing until repair is done.	3	1	3						
11. Fire Effect without Mitigation: Damage to plant may cause shutdown of system	Fire	Fire hydrant in proximity of building. Provide adequate secondary containment for equipment and tanks.	Fire water/pumps at station. If necessary, can truck offsite or stop backwashing to mitigate downtime of conditioning system.	N/A	N/A	Contact Fire Dept. Inspect, assess damage, begin repairs, startup. If necessary, can truck offsite or stop backwashing until repair is done.	2	1	2						

TABLE 2.2-1
Failure Mode Effect Analysis Matrix — Remedy-produced Water Management System
Groundwater Remedy Operation and Maintenance Manual
Volume 3: Contingency Plan
PG&E Topock Compressor Station, Needles, California

			Mitigation - Operations							Type of Unacceptable Condition					
				Observable Condition											
Potential Failure and Effect without Mitigation	**Potential Cause**	**Mitigation - Design**	**Mitigation**	**Remedy SCADA**	**Human**	**Action if Cause Occurs**	**Severity (1 Low - 5 High)**	**Likelihood (1 Low - 5 High)**	**Severity x Likelihood**	**A. Unacceptable Remedy Performance**	**B. Significant Schedule Increase**	**C. Significant Cost Increase**	**D. Significant Change to Impacts (Additional CEQA Analysis)**	**E. H&S or Compliance NOV (other than related to remedy performance)**	**Notes**
12. System is damaged due to vandalism Effect without Mitigation: Damage to wells could result in increased trucking or well repair/ replacement. Plant is off-line for weeks to months while being re-built.	Vandalism	Facilities within the TCS will be secured by current TCS security system. Controls built into the system (alarms, containment, automatic cutoffs and shutdowns) are designed to help mitigate uncontrolled releases or discharges following several types of due to vandalism	Periodic inspections of all equipment inside and outside conditioning system and wells. TCS access control and security will help protect plant.	N/A	N/A	Inspect and assess site for damage / mechanical integrity or repair.	2	1	2						

Notes:

[1] Anticipated annual remedy-produced water volume is 7.6 million gallons (MG) per year. With provisional wells this volume could increase to 10 MG per year. The automated backwashing and conditioning system has been designed to accommodate this range of anticipated volume of wastewater. If the system functions as designed, the amount of trucking needed during O&M would be minimal, and within the range analyzed in the certified EIR (DTSC 2011; see Section 3.5.3, page 3-26).

[2] Current estimated annual flow is 7.6 MG; with provisional wells could be 10 MG/yr. Peak design flow is 35 gpm (18.4 MG/yr.).

[3] Space is reserved to allow for increase storage and system conditioning capacity if needed.

[4] Standard Operating Procedures are presented in O&M Manual Volume 1, Operation and Maintenance Plan, Appendix B.

Acronyms and Abbreviations:

ARAR = Applicable or Relevant and Appropriate Requirements
BMP = Best Management Practices
EIR = Environmental Impact Report
H&S = Health & Safety
HMBP = Hazardous Materials Business Plan
IM-3 = Interim Measure No. 3
NOV = Notice of Violation
N/A = Not Applicable
O&M = Operation and Maintenance
RAO = Remedial Action Objective
RPWC = Remedy-Produced Water Conditioning
SCADA = Supervisory Control and Data Acquisition
SOP = Standard Operating Procedure
SWPPP = Storm Water Pollution Prevention Plan
TCS = Topock Compressor Station

TABLE 2.3-1
Failure Mode Effect Analysis Matrix — Freshwater Supply
Groundwater Remedy Operation and Maintenance Manual
Volume 3: Contingency Plan
PG&E Topock Compressor Station, Needles, California

	Failure Mode	Likely Causes for Failure	Effects of Failure	Operational Actions	Possible Contingency Measures
Failure Modes Associated with HNWR-1A Source	Well yield declines below the minimum required for optimal remedy operation[1]	• Pump failure • Extraction well fouling • Excessive drawdown due to competing water users	• Delay in reaching Remedial Action Objectives	• Replace pump • Rehab well • Replace well • Bring HNWR-1 online	• Supplement flow with water from Topock 2/3 or bring Site B well online. Blend Site B water with water from Topock-2/3 and/or HNWR-1/1A. Potentially implement a contingent arsenic treatment system per State Water Resources Control Board letter (SWRCB 2013)[2].
	Quality of water in freshwater well declines over time	• Pumping draws in saline water from below or geochemically reduced water containing iron and manganese	• Could result in shutting down remedial action if water quality is not suitable for injection	• Isolate the upper well screen interval from the lower screen interval (e.g., using an in-well packer) • Aerate freshwater prior to injection (note that this option requires a small amount of piping changes and addition of fittings) • Increase riverbank extraction (note that this option could only be used to offset a marginal reduction in freshwater supply)	• Supplement flow with water from Topock 2/3 or bring Site B well on line. • Potentially implement a contingent arsenic treatment system per State Water Resources Control Board letter (SWRCB 2013)[2]
	Freshwater pumping causes adverse effects on water quality or capacity in nearby wells	• Over pumping of aquifer in areas with marginal groundwater quality / transmissivity	• Could result in shutting down remedial action if affected water users cannot be made whole	• None	• Bring Site B well on line. Blend Site B water with water from Topock-2/3 and/or HNWR-1/1A. Potentially implement a contingent arsenic treatment system per State Water Resources Control Board letter (SWRCB 2013)[2]

Notes:

[1] PG&E provided a response to a two-part question regarding the potential effects of a prolonged drought on Arizona water supply and the remedy process via an email from Yvonne Meeks/PG&E to Doug Bonamici/Colorado River Indian Tribes, titled Re; February TWG Action Item and dated March 24, 2015. The questions and responses are stated as follows:

"1.) Are you saying severe drought will not adversely affect remedy flow characteristics as it operates, and,

PG&E Response: That's correct, PG&E professional judgment is that potential future drought conditions would not be expected to significantly impact the remedy flow characteristics as it operates, and therefore the remedy performance or simulated timeframes. The remedy doesn't depend on local precipitation for its function.

2) That a prolonged drought is unlikely to reduce/impair the availability of Arizona freshwater supply so much that it would jeopardize the remedy process?

PG&E Response: Again correct, as long as there is flow in the Colorado River, then the remedy is expected function as designed (including the availability of freshwater from Arizona). The aquifer on both sides of the river Topock is fed by the Colorado River and the river is

TABLE 2.3-1
Failure Mode Effect Analysis Matrix — Freshwater Supply
Groundwater Remedy Operation and Maintenance Manual
Volume 3: Contingency Plan
PG&E Topock Compressor Station, Needles, California

Failure Mode	Likely Causes for Failure	Effects of Failure	Operational Actions	Possible Contingency Measures

highly controlled by the dams upstream. So as long as there is some water flowing in the Colorado River, there would be adequate water in the aquifer to support the pumping associated with the remedy.

Although it has never happened, in an extreme drought there could possibly be curtailments on water usage in the Colorado River basin. That could cause PG&E, along with other water users, to have to reduce pumping – although we have water rights well in excess of planned pumping needs. A reduction in pumping would not result in a failure of the remedy. The natural hydraulic gradient would continue to move the plume through the IRZ even in the absence of pumping, just at a slower rate."

[2] The referenced letter provides the SWRCB's findings and conditions for allowing injection of fresh water containing naturally occurring arsenic above the maximum contaminant level (MCL) without pre-treatment. The letter requires that if the leading edge of the arsenic plume above the 10 parts per billion [μg/L] water quality objective extends more than 150 feet away from injection locations, PG&E must immediately reassess its modeling calculations and quickly identify interim actions it can take to limit the migration of the arsenic plume. The letter further directs the cessation of the injection of untreated fresh water if the arsenic concentration caused by injection of fresh water is detected above the water quality objective (10 μg/L) at 225 feet from the injection locations. The letter states that at this point, DTSC should either (i) require pretreatment to remove arsenic prior to injection or (ii) require another source of fresh water in order to meet the water quality objective.

TABLE 2.4-1
Failure Mode Effect Analysis Matrix — Power Supply
Groundwater Remedy Operation and Maintenance Manual
Volume 3: Contingency Plan
PG&E Topock Compressor Station, Needles, California

Potential Failure and Effect without Mitigation	Potential Cause	Mitigation – Design	Mitigation - Operations				Severity (1 Low - 5 High)	Likelihood (1 Low - 5 High)	Severity x Likelihood	Type of Unacceptable Condition					Notes
			Mitigation	Observable Condition		Action if Cause Occurs				A. Unacceptable Remedy Performance	B. Significant Schedule Increase	C. Significant Cost Increase	D. Significant Change to Impacts (e.g., Additional CEQA Analysis)	E. H&S or Compliance NOV (other than related to remedy	
				Remedy SCADA	Human										
1. Utility or generated power supply failure Effect Without Mitigation: Loss of equipment function and eventual loss of control system functionality. May prohibit systematic shutdown of processes	Raptor entanglement, lightning strike on line, high wind, post insulator destroyed by gunshot, traffic collision with pole, or external customer causes distribution circuit trip	Uninterruptible Power Supplies (UPS) for control circuits	Maintain site security.	N/A	N/A	Repair, replace	1	2	2						
	Generator mechanical, electrical, or controller failure	Interconnection to other source(s) of generated electrical power, connection point for dedicated portable generator (note that a portable, rental backup generator of similar make and model of the existing generator [Isuzu Model 6WG1X] will be mobilized onsite as needed during project implementation to provide power).	N/A	N/A	N/A	Repair, replace	2	1	2						
2. Electrical distribution equipment failure Effect Without Mitigation: Loss of power downstream of failed equipment. May prohibit systematic shutdown of processes	Manufacturing defects, age, and heat exposure, or ingress of dirt/sand into electrical equipment	Use utility-grade equipment, rated for installation environment. Utilize common equipment styles for quick replacement	Periodic electrical testing, including transformer dissolved gas analysis	N/A	N/A	Repair, replace	3	1	3						
3. Damage from direct or nearby lightning strikes Effect Without Mitigation: Loss of power downstream of failed equipment. May prohibit systematic shutdown of processes	If power is from utility: Connection to utility overhead lines which attract lightning	Use of Surge Protective Devices	Periodic inspection of SPD indicators	N/A	N/A	Repair, replace	3	1	3						
	Direct strike on equipment	None	None	Loss of Power Detected	Charred Enclosure	Repair, replace	3	2	6						
4. Cable damage/fault/failure Effect Without Mitigation: Loss of power downstream of failed equipment. May prohibit systematic shutdown of processes	Digging near underground lines, rodents in termination cabinets, over temperature leading to insulation failure	Protect power cabling in raceway and enclosures. Minimize sun exposure to insulation systems and size circuits conservatively	Keep enclosure doors closed, use proper bolt torques	Loss of Power Detected	N/A	Repair, replace	3	1	3						
5. Externally caused equipment failure Effect Without Mitigation: Loss of power downstream of failed equipment. May prohibit systematic shutdown of processes	Vandalism, theft, force majeure	Provide secure, robust, and lockable system enclosures	Inspect accessible equipment for damage	N/A	Inspect accessible equipment for damage	Repair, replace	3	1	3						

TABLE 2.4-1
Failure Mode Effect Analysis Matrix — Power Supply
Groundwater Remedy Operation and Maintenance Manual
Volume 3: Contingency Plan
PG&E Topock Compressor Station, Needles, California

			Mitigation - Operations							Type of Unacceptable Condition					
				Observable Condition											
Potential Failure and Effect without Mitigation	Potential Cause	Mitigation – Design	Mitigation	Remedy SCADA	Human	Action if Cause Occurs	Severity (1 Low - 5 High)	Likelihood (1 Low - 5 High)	Severity x Likelihood	A. Unacceptable Remedy Performance	B. Significant Schedule Increase	C. Significant Cost Increase	D. Significant Change to Impacts (e.g., Additional CEQA Analysis)	E. H&S or Compliance NOV (other than related to remedy	Notes

Notes:
ARAR = applicable or relevant and appropriate requirement
H&S = health and safety
N/A = not applicable
NOV = Notice of Violation
PLC = programmable logic controller

TABLE 2.5-1
Failure Mode Effect Analysis Matrix — Remedy SCADA, Control Systems, and Instruments
Groundwater Remedy Operation and Maintenance Manual
Volume 3: Contingency Plan
PG&E Topock Compressor Station, Needles, California

Potential Failure and Effect without Mitigation	Potential Cause	Mitigation - Design	Mitigation - Operations: Mitigation	Mitigation - Operations: Observable Condition: Remedy SCADA	Mitigation - Operations: Observable Condition: Human	Mitigation - Operations: Action if Cause Occurs	Severity (1 Low – 5 High)	Likelihood (1 Low – 5 High)	Severity x Likelihood	Type of Unacceptable Condition: A. Unacceptable Remedy Performance	B. Significant Schedule Increase	C. Significant Cost Increase	D. Significant Change to Impacts (e.g., Additional CEQA Analysis	E. H&S or Compliance NOV (other than related to remedy	Notes
1. PLC hardware failure Effect Without Mitigation: Lose ability to send/ receive control signals from control room. Lose ability to collect data.	a. Over-temperature	Keep cooled, design includes shade or active cooling where required for equipment longevity.	Keep spares on-site in stock	Remedy SCADA monitors communication and PLC health, and alarms in failure event	Failure may result in unchanged or frozen process variable	Repair, replace	1	3	3						Would be fixed before would cause RAO or schedule issues
	b. Dust/Rainfall/Spray from washdown or pipe break	Design utilizes industrial-grade equipment, housing in National Electrical Manufacturers Association (NEMA)-rated enclosures appropriate for environment. For open enclosures include filters.													Would be fixed before would cause RAO or schedule issues
	c. Power supply irregularity (lightning, shifting generator power, utility's overvoltage, harmonics, temporary power loss)	UPS provided for each PLC.													Would be fixed before would cause RAO or schedule issues
2. Cabling or termination damage/failure Effect Without Mitigation: Lose ability to send/ receive control signals from control room. Lose ability to collect data.	Mechanical damage by backhoe or shovel for underground circuits, traffic or vandalism for above-ground circuits, or temperature changes loosen terminations	Provide conduit for mechanical protection of circuits, route fiber optic cables in protected areas of panels, monitor communications, detection tape, rigid conduit, concrete cap, pipe markers.	Use proper torque on cable terminations	Remedy SCADA monitors communications network, alarms in failure event	Routine patrols of utility corridors and facilities	Repair, replace	1	2	2						

TABLE 2.5-1
Failure Mode Effect Analysis Matrix — Remedy SCADA, Control Systems, and Instruments
Groundwater Remedy Operation and Maintenance Manual
Volume 3: Contingency Plan
PG&E Topock Compressor Station, Needles, California

			Mitigation - Operations							Type of Unacceptable Condition					
				Observable Condition											
Potential Failure and Effect without Mitigation	**Potential Cause**	**Mitigation - Design**	**Mitigation**	**Remedy SCADA**	**Human**	**Action if Cause Occurs**	**Severity (1 Low – 5 High)**	**Likelihood (1 Low – 5 High)**	**Severity x Likelihood**	**A. Unacceptable Remedy Performance**	**B. Significant Schedule Increase**	**C. Significant Cost Increase**	**D. Significant Change to Impacts (e.g., Additional CEQA Analysis**	**E. H&S or Compliance NOV (other than related to remedy**	**Notes**
3. Field instrumentation damage/failure Effect Without Mitigation: Lose ability to receive accurate control signals from control room or at local controllers. Diminished process data accuracy.	a. Thermal or physical damage to instrument or aging of internal parts or circuits, drifting of instrument output signal(s)	Provide sun protection and mechanical protection where instruments are vulnerable to damage	Calibrate instruments according to manufacturer's recommended schedules	Reduced control system and process performance	Test critical alarms as part of O&M procedure and field verification (e.g., water levels)	Adjust, repair, replace	1	1	1						For severities upon loss of critical instrumentation, see Process FMEAs.
	b. Power supply irregularity (lightning, shifting generator power, utility's overvoltage, harmonics, temporary power loss)	Connect externally powered instruments to UPS-fed circuits	Routine testing of battery capacity or regular replacement	Erroneous alarms, reduced control system and process performance	N/A	Repair, replace	1	1	1						
4. SCADA controls software failure: Effect without Mitigation: Control system commands lock themselves into last state	Software bug, OS or applications software	Use HMI software suited for size of system, rigorous testing of applications software prior to and during startup	Keep backup files onsite and offsite for all OS and application software programs	N/A	Loss of real-time monitoring and/or control	Reboot system, potential reload of software	2	2	4						
5. Valve fails in non-safe state. Effect without Mitigation: Water or chemical may flow not per design.	a. Power failure	Valves that are important to fail in safe position will be designed or configured with a fail-safe mode or passive valves (checks), alarm at PLC	N/A	Detection of undesirable process condition	N/A	Repair, replace	2	2	4						
	b. Electrically actuated valves - power loss at valve	Program to fail to safe position	N/A	Objectionable flow condition	N/A	Repair, replace	2	2	4						

TABLE 2.5-1
Failure Mode Effect Analysis Matrix — Remedy SCADA, Control Systems, and Instruments
Groundwater Remedy Operation and Maintenance Manual
Volume 3: Contingency Plan
PG&E Topock Compressor Station, Needles, California

Potential Failure and Effect without Mitigation	Potential Cause	Mitigation - Design	Mitigation - Operations				Severity (1 Low – 5 High)	Likelihood (1 Low – 5 High)	Severity x Likelihood	Type of Unacceptable Condition					Notes
			Mitigation	Observable Condition		Action if Cause Occurs				A. Unacceptable Remedy Performance	B. Significant Schedule Increase	C. Significant Cost Increase	D. Significant Change to Impacts (e.g., Additional CEQA Analysis	E. H&S or Compliance NOV (other than related to remedy	
				Remedy SCADA	Human										
6. Radio Communication interruption Effect Without Mitigation: Lose ability to send/ receive control signals from control room. Lose ability to collect data.	Vegetation or other obstruction in radio path	Antennas on towers with clear line of sight, use appropriate carrier frequency for link, program communications heartbeat	Vegetation management	Communication loss for radio link	N/A	Clear obstruction	1	2	2						
7. Externally caused SCADA equipment failure Effect Without Mitigation: Lose ability to send/ receive control signals from control room. Lose ability to collect data.	Vandalism, theft, force majeure	Provide secure and robust system enclosures, bollards where required, installations above flood plain	Periodic inspections of all equipment inside and outside conditioning system and wells. TCS access control will help protect plant.	Loss of equipment functionality	Visibly damaged or missing equipment	Repair, replace	1	1	1						
8. pH probe or other analytical probe/device fouling Effect Without Mitigation: Lose ability to monitor pH/parameter. Lose ability to collect data.	Contact with process liquid over time	Make pH probes or other devices accessible to operators	Routine inspection of cleaning of pH probes or devices	N/A	Rapid loss of calibration, visual fouling	Clean and re-calibrate	1	1	1						
9. Cyber-security: Software security, remote access security, or operating system update errors. Effect Without Mitigation: Lose ability to send/ receive control signals from control room. Lose ability to collect data.	Not keeping software up to date, remote hack	Design in site access security, and remote access security, password protected access	Maintain software license, password protection	N/A	N/A		2	1	2						

TABLE 2.5-1
Failure Mode Effect Analysis Matrix — Remedy SCADA, Control Systems, and Instruments
Groundwater Remedy Operation and Maintenance Manual
Volume 3: Contingency Plan
PG&E Topock Compressor Station, Needles, California

			Mitigation - Operations							Type of Unacceptable Condition					
				Observable Condition											
Potential Failure and Effect without Mitigation	**Potential Cause**	**Mitigation - Design**	**Mitigation**	**Remedy SCADA**	**Human**	**Action if Cause Occurs**	**Severity (1 Low – 5 High)**	**Likelihood (1 Low – 5 High)**	**Severity x Likelihood**	**A. Unacceptable Remedy Performance**	**B. Significant Schedule Increase**	**C. Significant Cost Increase**	**D. Significant Change to Impacts (e.g., Additional CEQA Analysis**	**E. H&S or Compliance NOV (other than related to remedy**	**Notes**
10. Remedy SCADA does not get alarms Effect Without Mitigation: Systems are shut down	Loss of communications which results in loss of status, control, and alarms.	Design includes layers of protection against such consequences. Such a failure would result in an alarm indicating loss of communication. See control scheme for the PLC in Appendix E of the 90% BOD Report, Section Number 26 79 15.	Periodic verification of SCADA/PLC communications	No communication	No communication		3	1	3						

Notes:
ARAR = applicable or relevant and appropriate requirement
BOD = Basis of Design
CEQA = California Environmental Quality Act
H&S = health and safety
FMEA = Failure Mode Effects Analysis
N/A = not applicable
NOV = Notice of Violation
O&M = operation and maintenance
OS = operating system
PLC = programmable logic controller
RAO = remedial action objective
SCADA = supervisory control and data acquisition
TCS = Topock Compressor Station
UPS = uninterruptible power supply

TABLE 2.6-1
Failure Mode Effect Analysis Matrix — Enhanced Evaporation at TCS Evaporation Ponds
Groundwater Remedy Operation and Maintenance Manual
Volume 3: Contingency Plan
PG&E Topock Compressor Station, Needles, California

	Failure Mode	Likely Causes for Failure	Effects of Failure	Operational Actions	Possible Contingency Measures
Failure Modes Associated with Evaporation Ponds	Discharge rate will cause ponds to exceed capacity	• Compressor station wastewater discharge needs are high • Remedial waste water production rates are high	• Potential overflow of evaporation ponds	• Utilize portable pumps to transfer water to ponds with available capacity • Storage water in temporary tanks • Truck water offsite • Identify operational adjustments at compressor station to reduce station waste water generation	• Add drip system to Pond 1 and/or 2
	Flow rates through drip evaporation system decline	• Pump failure • Build-up in the circulation piping • Clogging of the circulation pipe perforations	• Potential overflow of evaporation ponds	• Rehab pump • Replace pump • Flush pipe or perform mechanical cleaning • Inspect and clean perforations	• Add drip system to Pond 1 and/or 2

3.0 References

California Department of Toxic Substances Control (DTSC). 1996. *Corrective Action Consent Agreement (Revised), Pacific Gas and Electric Company's Topock Compressor Station, Needles, California.* EPA ID No. CAT080011729. February 2.

_____. 2011. *Final Environmental Impact Report for the Topock Compressor Station Groundwater Remediation Project*. January 31.

California State Water Resources Control Board (SWRCB). 2013. Letter from Jon Bishop/SWRCB to Stewart Black/DTSC. Subject: Topock Compressor Station: Remedy Requirements Associated with Injection of Groundwater Containing Naturally Occurring Arsenic. November 20.

U.S. Department of the Interior (DOI). 2013. Remedial Action/Remedial Design Consent Decree (CD) between the United States of America and Pacific Gas & Electric Company. Case 5:13-cv-00074-BRO-OP, Document 23. Entered November 21.

Appendix A
Contingent Dissolved Metals Removal System Conceptual Design Basis

Contingent Dissolved Metals Removal System Conceptual Design Basis
PG&E Topock Compressor Station, Needles, California

PREPARED FOR: Pacific Gas and Electric Company

PREPARED BY: CH2M HILL

DATE: August 14, 2014

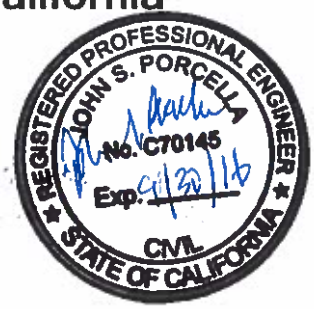

1.0 Introduction

In response to the California Department of Toxic Substances Control's (DTSC's) comment #757 DTSC-239 and the Tribes' comment #341 on the 60% Basis of Design Report for Pacific Gas and Electric Company's (PG&E's) Final Groundwater Remedy for the Topock Compressor Station (TCS), a contingency plan to remove scaling ions from remedy-produced water is presented in this technical memorandum (TM). The information contained herein includes a description of the contingent removal system along with an estimate of the system footprint, chemical use, electricity use, and waste generation.

The contingent system, referred to herein as the dissolved metals removal system (DMRS), will be located entirely in the planned Remedy-produced Water Conditioning Building inside the TCS. No additional footprint is required for installation of this contingency system. The DMRS is designed to be fully integrated into the currently planned conditioning process for remedy-produced water, thereby allowing for easy installation if required in the future.

The DMRS will be primarily located on the second floor of the Remedy-produced Water Conditioning Building. Certain treatment chemicals will be stored on the first floor of the planned Remedy-produced Water Conditioning Building. For additional information on Remedy Produced Water management, see Appendix F of the Basis of Design Report (CH2M HILL, 2014).

2.0 Water Quality, Treatment Goals, and Design Flow Rates

This conceptual basis of design is based on Topock-specific groundwater data collected from Floodplain Area monitoring wells and in-situ pilot test wells, as well as experience in designing and operating iron, manganese, calcium, and magnesium groundwater treatment systems on non-Topock projects. Once the Final Groundwater Remedy is up and running, this basis of design should, at a minimum, be verified with actual water quality information and any adjustments to the conceptual design should be made accordingly.

Prior to implementation, bench-scale and pilot-scale tests should be conducted using actual remedy-produced water to determine the final design of the DMRS and finalize equipment selection.

2.1 Design Influent Water Quality

For the purpose of this conceptual design, it is assumed that the quality of remedy-produced water generated from the future National Trails Highway (NTH) In-situ Reactive Zone (IRZ) injections wells will be similar to the groundwater quality data of the existing Floodplain Area monitoring wells that are considered to be anoxic (that is, low oxygen concentrations representative of anticipated groundwater during IRZ operations). Table 1 (presented at the end of this TM) summarizes the groundwater quality for these Floodplain Area anoxic monitoring wells (data collected through November 2013). The mean concentrations of the parameters in the anoxic Floodplain Area monitoring wells are the primary basis of the "expected" concentrations of DMRS influent water quality parameters. Exhibit 1 summarizes the DMRS influent water quality and flow design basis.

EXHIBIT 1
Conceptual Design Flow Rate, Influent Water Quality, and Treatment Goals
Contingent Dissolved Metals Removal System Conceptual Design Basis TM
PG&E Topock Compressor Station, Needles, California

Parameter	Units	Expected Influent Value [a]	Upper Expected Influent Value [a]	Target Effluent Value
Process Flow Rate	Gallons per minute	20-35		
pH	pH units	7.4	7.9	6.5-8.5
Alkalinity	mg/L (as $CaCO_3$)	160	330	--
Total Dissolved Solids	mg/L	6,000	12,000	--
Temperature	degrees Celsius	29.0	30.5	--
Iron	mg/L	2.6	8.6	< 0.15
Manganese	mg/L	1.8	2.7	< 0.02
Calcium	mg/L	304	500	< 200[b]
Magnesium	mg/L	99	150	--
Chloride	mg/L	2,600	4,050	--
Sulfate	mg/L	790	1,550	--
CCPP [c]	mg/L	21.2	121	< 0

Notes:
[a] Values are estimated on the basis of existing groundwater data and anticipated changes in groundwater conditions at injection wells. Remedy-produced water quality data collected after the Final Groundwater Remedy is implemented should be compared to these expected values, and the final design should be adjusted accordingly. Bench-scale tests for equipment components should also be conducted using remedy-produced water in the final design.

[b] The target effluent value of calcium is the concentration threshold determined using WaterPro for which the calcium carbonate precipitation potential (CCPP) is less than zero when all other water quality parameters are at their expected concentrations.

[c] CCPP is used as the indicator to evaluate the potential for scaling to occur for this memorandum. CCPP is estimated using WaterPro.

-- = No target value specified

Sources:
2013 Annual Monitoring Report for the Floodplain Reductive Zone In-Situ Pilot Test, Tables 3 and 4 (ARCADIS, 2013)
Concentrations in Floodplain Area monitoring wells (see Table 1 at the end of this TM).

2.2 Design Flow Rate and Treatment Goals

The design flow rate is equivalent to the design flow rates of the Remedy-produced Water Conditioning System. The DMRS will be designed to treat “A-side” remedy-produced water only, as this is the water that is likely to have high concentrations of scaling compounds. The goal of the DMRS is to minimize precipitation of iron, manganese, calcium, and magnesium in the piping system and the injection wells by removing the metals. Exhibit 1 shows the DMRS design flow rates and the treatment goals.

Concentrations of iron and manganese that will not cause adverse aesthetic effects are defined as secondary maximum contaminant levels (MCLs). Aesthetic effects include such things as scaling and discoloration, but do not cause adverse health effects. The target effluent concentration values for iron and manganese shown in Exhibit 1 are about 50% lower than their respective secondary MCLs in order to provide more protection from scaling. Calcium and magnesium contribute to water “hardness,” and the influent water quality

conditions shown in Exhibit 1 are considered "very hard"(typically water with combined hardness concentrations greater than 300 milligrams per liter [mg/L] as calcium carbonate ($CaCO_3$) is considered very hard [American Water Works Association, 1995]). Under these influent water quality conditions, calcium and magnesium will likely scale the piping and wells, and thus the treatment goal would be to reduce the magnesium and calcium concentrations so they do not precipitate. The degree to which calcium and magnesium precipitate depends on pH, temperature, and dissolved salt concentrations, and the calcium carbonate precipitation potential (CCPP) will be used as the indicator in this conceptual design.

Water!Pro™ [1](WaterPro) modeling software was used to evaluate the design water quality and establish a design treatment goal. The treatment goal for calcium is the concentration threshold determined by WaterPro for which the CCPP is less than zero when all other water quality parameters are at their expected concentrations (note that a measure of CCPP below zero indicates that calcium carbonate is under-saturated in solution, therefore not likely to precipitate).

3.0 Evaluation and Selection of Removal Technologies

For this conceptual design basis, PG&E has identified and evaluated proven treatment technologies for iron, manganese, calcium, and magnesium that have been successfully used by municipalities and industry. Unproven technologies or technologies that have not been widely used in full-scale applications were not considered.

The initial technologies considered included the following:

- For iron and manganese:
  - Oxidation with several oxidants followed by filtration
  - Biological removal
  - Chemical precipitation softening (with lime or caustic)
  - Ion (cation) exchange
  - Adsorption onto manganese oxide-containing media such as manganese dioxide (MnO_2) or greensand
- For calcium and magnesium:
  - Ion (cation) exchange
  - Chemical precipitation softening (with lime, soda ash and/or caustic [sodium hydroxide])
  - Membrane softening with reverse osmosis or nanofiltration membranes

Descriptions of the considered technologies and a discussion of the preferred technology that was selected are presented in the subsections below; the conceptual design is then presented in Section 4.0.

3.1 Iron and Manganese Removal

There are many effective iron and manganese treatment methods available, including oxidation and filtration, chemical precipitation softening, adsorptive filtration, ion exchange, membrane filtration (e.g., reverse osmosis), and biological filtration (Odell, 2009). Membrane filtration was not considered for the DMRS due to the anticipated high energy usage and large volume of wastewater generated. Biological filtration was eliminated because of the potential for treatment upsets with influent pH changes. The methods of oxidation and filtration and ion (cation) exchange were ruled out because they are typically less effective at the relatively high expected concentrations of iron and manganese in influent water. In addition, ion (cation) exchange for iron and manganese removal was eliminated because all of the iron and manganese must be in the reduced form for this process to be effective and some of the iron and manganese in the remedy-produced water is likely to be oxidized.

[1] Corrosion Control & Treatment Process Modeling Program developed by Schott Engineering Associates for use with Microsoft Excel.

Chemical precipitation softening—typically done with lime and less so with caustic—is effective in removing iron and manganese from water, but not typically used due to higher capital costs than other proven technologies; however, it was retained for further consideration as a feasible option.

Adsorptive filtration is a method where the iron and manganese are oxidized, then adsorbed onto one of several available types of high-content manganese oxide-containing mineral surface. Adsorptive filtration with MnO_2 was considered for removing iron and manganese in this conceptual design because of its proven performance, high efficiency, low energy use, low waste generation, and small amount of space needed for equipment.

In this removal method, an oxidant (such as chlorine) is injected just upstream of the filtration vessels. After a short contact time of 15 to 30 seconds, iron and manganese will be oxidized and adsorb onto the surface of the MnO_2 media. The excess chlorine in the process water keeps the MnO_2 media catalytically active by converting the iron and manganese to oxides (ferric hydroxide [$Fe(OH)_3$] and MnO_2), thereby providing additional adsorption sites for oxidation to take place (MWH, 2005). These rapid reactions allow the removal system to be designed with relatively high hydraulic loading rates (i.e., ratio of flow rate to filter cross section area) and small footprint. Any residual chlorine oxidant will be removed to prevent adverse effects when re-injected to the IRZ wells. The filtration vessels are backwashed periodically and any solids that are removed can be settled in a clarifier or decant tank by gravity. Polymers or other settling aids may be needed to improve solids formation. Solids are dewatered before being disposed of off-site. Water can be decanted and recycled back to the head of the process up to 95 percent of the backwash flow.

Another technology that operates using the same principle of oxidation followed by adsorption that has often been used to remove iron and manganese is potassium permanganate oxidation and greensand filtration. However, relative to oxidation followed by MnO_2 adsorption, this technology requires longer contact times, slower loading rates, and larger diameter vessels, and the manganese effluent concentration are more difficult to control (AdEdge, 2004). Potassium permanganate is also not an ideal oxidant because the unreacted permanganate produces pink discoloration of the water and would require removal following treatment. Similar to MnO_2 filtration, the filter beds are backwashed periodically and solids are dewatered and then disposed of off-site.

3.2 Calcium and Magnesium Removal

The technologies considered for calcium and magnesium removal included ion exchange, chemical precipitation softening (with lime, soda ash and/or caustic), and membrane softening with reverse osmosis or nanofiltration membranes. The adsorptive filtration method is effective at removing iron and manganese but ineffective in removing calcium and magnesium, so was discarded.

Ion exchange softening is typically carried out using strong acid cation exchange resins. Using the sodium form of strong acid resin, the sodium ions (Na^+) enter solution and divalent ions such as calcium (Ca^{2+}) and magnesium (Mg^{2+}) are adsorbed to the resin. After a resin bed becomes loaded with Ca^{2+} and Mg^{2+}, it is regenerated with high strength sodium chloride brine solution. The resin bed regeneration involves a sequence of steps consisting of backwashing, brine injection, slow rinse displacement, and fast rinsing. Ion exchange for the anticipated remedy-produced water would result in a large wastewater stream (more than 20 percent of influent flow) and is therefore rejected from further consideration.

Membrane softening with reverse osmosis and nanofiltration membranes was eliminated from consideration because of the high operational costs and the large amount of concentrated brine produced by this alternative (20 percent to 50 percent of the entire plant production).

Chemical softening involves coagulation, flocculation, and sedimentation; these steps occur in one basin, called a solids contact clarifier or reactor clarifier with sludge recirculation (MWH, 2005) or in a package treatment unit. Produced water treated by any of the chemical softening processes needs to be filtered before injecting back into the subsurface.

Lime-soda ash softening, partial (i.e., not fully softened) lime softening, and partial caustic softening are forms of chemical softening in which calcium (Ca^{2+}), magnesium (Mg^{2+}), and a combination of Ca^{2+} and Mg^{2+} along with iron (Fe^{2+}) and manganese (Mn^{2+}) are precipitated by chemical addition to the stream being treated. The chemical reactions are complex but result in primarily solid forms of calcium carbonate, ferric carbonate, and oxides of manganese or manganese hydroxide. If magnesium is precipitated, it would form magnesium hydroxide. Lime-soda ash softening is the most common of these softening processes. Partial (lime or caustic) softening relies on naturally occurring alkalinity in the stream being treated, so no additional soda ash (sodium carbonate) needs to be added.

In the case of the expected influent water quality, the alkalinity (160 to 330 mg/L as $CaCO_3$) is sufficient to precipitate most of the calcium as calcium carbonate using either partial lime or caustic softening. Partial caustic softening has a number of advantages over partial lime softening for calcium removal; for one, addition of caustic, unlike lime, does not introduce additional calcium to the stream that would also need to be removed, and all the alkalinity is used to precipitate calcium from the raw water. Using liquid caustic eliminates the difficulties in handling dry chemical feeding of lime or lime and soda ash. Although caustic is more expensive than lime, the higher cost is partially offset by the reduced labor needed to maintain an all-liquid system. Partial caustic softening also produces less by-product sludge than partial lime softening. Taking all of this into account, partial caustic softening would be the most suitable chemical softening option for calcium and magnesium removal in the DRMS.

3.3 Selected Process

After ruling out all treatment technologies for removal of either iron and manganese or calcium and magnesium that are unsuitable for the DMRS under the anticipated water quality conditions, it is determined that partial caustic softening is the best available option for removing calcium and magnesium as well as iron and manganese. Although not necessarily the least costly alternative for either of the two pairs of target constituents when considered individually, partial caustic softening is the best alternative that will be effective at removing all four constituents from the remedy-produced water stream, obviating the additional costs and design challenges that would be posed by providing two different treatment trains to handle the four constituents. Therefore partial caustic softening was the process selected to carry into the conceptual design stage for removal of calcium and magnesium as well as iron and manganese.

4.0 Contingent Dissolved Metals Removal Process and System Description

This section describes the design philosophy, the removal process, and the conceptual system configuration for a partial chemical softening process using caustic. The process flow diagram (PFD) is shown on Figure 1a and the corresponding mass balance is shown in Figure 1b (figures are presented at the end of this TM).

4.1 System Description

The DMRS is a potential future process addition for the A-side stream of the remedy-produced water conditioning process. The contingent system would be installed downstream of the influent tanks (where batch conditioning including pH adjustment, coagulant addition, solids settling, and sludge draw-off occurs) and the cartridge filters (where suspended solids are removed from the process stream). Exhibit 2 illustrates the contingent dissolved metals removal process and its integration into the planned Remedy produced Water Conditioning System.

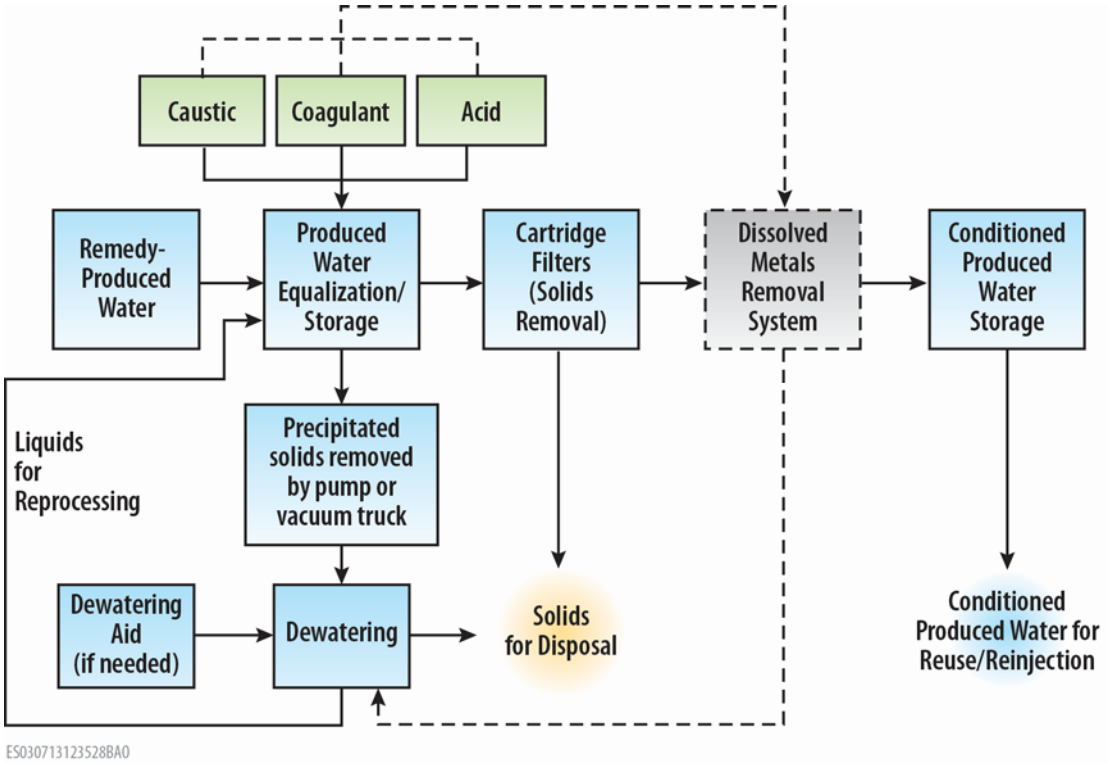

EXHIBIT 2
Dissolved Metals Removal System Schematic Diagram
Contingent Dissolved Metals Removal System Conceptual Design Basis TM
PG&E Topock Compressor Station, Needles, California

After filtration, the produced water would be fed into a process unit to improve the coagulation/flocculation and enhance solids removal. This unit combines several steps including:

1. Rapid mixing of the chemical agents – Rapid mixing is used to quickly and uniformly disperse the chemical agents throughout the water. Chemical agents will include 25 percent caustic and possibly a coagulant. The need for coagulant would be confirmed during bench-scale testing. Caustic addition would result in a solution pH of 9.7 to 10 to enable sufficient calcium to be removed to achieve a desired CCPP level.
2. Chemical reactions – Calcium forms calcium carbonate, a solid precipitate, by reacting with caustic or sodium carbonate (formed by reaction of carbonic acid with caustic). Magnesium is soluble up to a pH of 11 and so would not be removed to a great extent. Additional residence time is needed in the reaction chamber due to the high dissolved solids concentrations which slow the reaction rate (estimated to be 35 to 40 minutes).
3. Solids formation –The carbonate solids will form as tiny particles initially. A coagulant and also a flocculant may be needed to aid in forming larger masses so as to settle more easily. The use of these chemical agents would be confirmed during bench scale testing
4. Effluent clarification – Carbonate solids would be allowed to settle by gravity to clarify the water. Gravity clarification is often enhanced by the use of parallel plates or tubes to aid in settling the solids. The tubes and plates interfere with the rising solid particles, increasing the rate of agglomeration, thereby causing the solids to settle to the bottom of the process unit. Flocculants can also help with clarification, and if needed would be identified during bench scale testing. A portion of the solids would be recycled

to "seed" the reaction and improve solids settling efficiency. Periodically, solids would be pumped out of the process unit to a dewatering device – in this case the phase separators located in the 1st floor.

As shown on the process flow diagram (Figure 1a), effluent water flows to a clear well and then is pumped through two single or media filter vessels sized for 4 to 6 gallons per minute per square foot (gpm/sq. ft.) hydraulic loading. Both vessels would be in service and the flow would be evenly split between them (parallel configuration). The media beds would be expected to capture any solids escaping the clarifier (15 to 30 mg/L is typical). Iron and manganese removal will be accomplished in the softening step. The filtered water would flow through cartridge filters to a treated water tank and from there be pumped to the conditioned water tank farm. Acid would be added upstream of the media filter vessels to neutralize the pH (to approximately pH 7.5) and to mitigate precipitation of calcium carbonate in the media filters. The neutralized water would be re-injected to the IRZ wells via the clean-in-place (CIP) pump located at the MW-20 Bench.

Filters would be backwashed periodically using filtered water for 10 minutes using a loading rate of 15 gpm/sq. ft. (47 gpm) or 5 minutes using a loading rate of 30 gpm/sq. ft. (94 gpm), depending on the media. The backwash stream would flow to a cone bottom decant tank. The liquid stream would be returned to the influent tanks and solids would be pumped to the phase separators.

4.1.1 Reserved Space for the Contingent DMRS within the Planned Remedy-produced Water Conditioning Plant

Many equipment manufacturers offer solids contact clarifiers with different configurations. These units are sized for larger flows (typically 500,000 gallons per day and larger) than what is anticipated for the DMRS. Some manufacturers offer package treatment units geared for small communities or small industrial facilities for different treatment processes including chemical softening. Solids contact clarifiers typically require a large vertical space to have sufficient mixing, solids accumulation and installation/maintenance for the unit mixers. For the purposes of this conceptual design, a package unit suitable for softening processes (supplied by companies such as Evoqua [formerly Siemens], Veolia, and Infilco Degremont) would be installed in the 2nd floor of the Remedy-produced Water Conditioning Building. The 1st floor has chemical storage and the phase separators for solids dewatering and would be used to support DMRS operations. The general arrangement is shown on Figure 2.

4.1.2 Solid Waste & Wastewater Generation

Solid wastes are generated largely from the solids contact clarifier, with lesser amounts from the filter backwash. Wastewater is generated by daily backwashing of the filter media to reduce pressure losses and maintain uniform bed flow profiles to maintain system performance. Daily backwashing removes precipitated non-hazardous suspended solids including calcium carbonate and precipitated iron and manganese from the media bed. Backwashing is anticipated to occur daily. The solid and liquid portions of the backwash water are separated in the cone bottom decant tank. The liquid portion of the backwash water is expected to have similar qualities to the treated water, with very little soluble scaling ions present. A summary of the waste generation calculations is shown in Exhibit 3.

EXHIBIT 3
Summary of Waste Generation
Contingent Dissolved Metals Removal System Conceptual Design Basis TM
PG&E Topock Compressor Station, Needles, California

Item	Amount, Units
Backwash wastewater [a]	9,800 gallons per year
Sludge [a]	168 tons per year
Spent filter media	2.6 tons over project life (assume 30 years)

Notes:
[a] Based on assumed volume of 4.67 million gallons per year that would be processed in this system.

The volume of wastewater was estimated based on the following assumptions:

- Backwash rate is 15 to 30 gpm/sq. ft. and vessel cross section area is 3.1 sq. ft, depending on the media provided with the filters.
- Backwashing time is 5 to 10 minutes (5 minutes for the media requiring 30 gpm/sq. ft. and 10 minutes for the media requiring 15 gpm/sq. ft.) resulting in 470 gallons per backwash per vessel.
- Two vessels are backwashed daily.
- 95 percent of the backwash water is recycled to the influent tank farm with the remainder pumped to the evaporation ponds.

The backwash volume of 470 gallons/backwash x 2 vessels/day x 4 days of operation/week x 52 weeks of operation/year x 5% remaining after recycling = 9,800 gallons /year. This volume is small enough that it could be disposed of in the Compressor Station ponds if necessary.

Wastewater sludge is mostly calcium carbonate ($CaCO_3$); for this calculation all of the sludge from the clarifier and backwash filter stream is considered to be $CaCO_3$: 104 mg/L Ca x (1/40 mg/millimole [mmol] Ca) x 1 mmol $CaCO_3$ / mmol Ca x 100 mg $CaCO_3$ /mmol = 260 mg/L.

Pounds of dry solids/million gallons (MG): 260 mg/L x 8.34 lb/MG = 2,170 lb/MG. Assumes the sludge can be dewatered to 3 percent solids.

The amount of dry solids generated per year based on the calculated annual flow (Table 2) is 4.67 MG/yr x 2,170 lb/MG / 0.03 = 337,000 lb / yr = 168 tons/yr.

At 10 tons per phase separator, this results in about 17 phase separator bins being disposed of annually.

The possible disposal of the worn filter media would as also produce a solid waste stream. The filter media has a long service life of typically 10-15 years, but the actual lifespan is project- and system-specific. The mass of solid waste to be managed is estimated based on the following assumptions:

- The media has a specific gravity of 1.92 with water density of 62.4 pounds per cubic foot (cf)
- Each vessel has 11 cf of media
- Two vessels need replacement twice during the project life

Therefore the estimated solid waste generated per year for the DMRS is 2 vessels x 11 cf x 2 replacements = 44 cf x 1.92 x 62.4 lb/cf = 5,270 lb = 2.6 tons.

4.2 Chemical and Media Use

Chemicals will be used in the treatment system for pH adjustment in the partial softening process. WaterPro was used to calculate caustic and hydrochloric acid use. In addition a coagulant and/or flocculent may be necessary for efficient solids removal, and these would be selected during bench-scale testing. The estimated chemical usage is shown in Exhibit 4.

4.3 Electricity Usage

Electricity usage was estimated based on the power consumption from equipment (primarily pumps) usage. The estimated electricity usage of the DMRS is 3,200 kilowatt-hours per year.

EXHIBIT 4
Estimated Chemical Usage
Contingent Dissolved Metals Removal System Conceptual Design Basis TM
PG&E Topock Compressor Station, Needles, California

Item, Units	25% Caustic	19% Hydrochloric Acid	Coagulant (If needed)	Polymer[b] (If needed)
Calculated dose, mg/L	93	3.6	TBD	1
Pure chemical used, pounds/year [a]	3,600	140	TBD	39
Chemical product usage, gallons/year	340	15	TBD	3.4

Notes:
[a] Based on assumed volume of 4.67 million gallons per year that would be processed in this system.
[b] A polymer if required would be used as a flocculating agent. Its need would be determined during bench scale testing.
mg/L – milligrams per liter
TBD = to be determined

4.4 Controls Philosophy

The system will be automated to reduce the need for continuous operator oversight. Electronic notifications will be sent automatically to on-site operators that notify them of system alarms, shutdown, or other issues. System automation will be controlled using a programmable logic controller that will communicate with the groundwater remedy supervisory control and data acquisition system (SCADA). Remotely controlled valves will have pneumatic actuators if possible for diverting water or stopping flow. Online pH will be incorporated to enable remote process monitoring and control. Iron, manganese, calcium and magnesium cannot be monitored directly using an online analyzer. Grab samples will be collected periodically from sample ports and analyzed using bench-top colorimetric instruments in the sample room (located in the Remedy-produced Water Conditioning Building) to monitor iron, manganese, calcium and magnesium levels.

4.5 Supporting Facilities

As discussed previously, the DMRS would be installed in the Remedy-produced Water Conditioning Building. Electricity will be provided to the Remedy-produced Water Conditioning Building from the Compressor Station. The building will have a heating, ventilation, and air conditioning system for the sample room and electrical equipment room. A programmable logic controller located at the Remedy-produced Water Conditioning Building will control the DMRS with remote monitoring and control accomplished by the groundwater remedy SCADA.

4.6 Contingent DMRS in Relation to the Overall Well Maintenance Program for the Groundwater Remedy

The DMRS, if required, would be a part of the Remedy-produced Water Conditioning System. Effluent water from the DMRS is sent to the A-side conditioned water storage tanks, and from there can be pumped to tank TNK-720 at the MW-20 Bench and returned to the NTH IRZ injection wells via the CIP injection pump and piping that feeds the North and South NTH IRZ headers. If implemented, the blending ratio of the DMRS effluent to total injected water flow is 20-35 gpm to 200-400 gpm. Therefore, the DMRS effluent could account for 5-18 percent of the injected water into the IRZ wells, which is small compared to the amount of groundwater to be injected into the wells. Therefore, routine and non-routine well maintenance procedures will continue to be the primary means to mitigate the effects of scaling/fouling in wells due to dissolved metals. Procedures for well maintenance are described in detail in the Operations and Maintenance (O&M) Plan for the Groundwater Remedy (Volume 1 of the O&M Manual, Section 4 and Appendix B).

4.7 Design Philosophy/Uncertainties in Design

Because this conceptual design was developed absent the actual water quality information of the future groundwater and remedy-produced water and without bench testing the selected equipment and chemicals using remedy-produced water, various uncertainties exist in the design that will need to be confirmed after the Final Remedy is implemented. The design of the DMRS and expected chemical usage, waste production, and electricity usage should be adjusted based on actual water quality information and bench-scale testing results. Some or all of the following testing and bench-scale tests may be needed to confirm the design of the Contingent DMRS:

- Water quality testing of A-side remedy-produced water; this should include testing for key parameters listed in Exhibit 1, as well as other constituents that are prone to causing scaling/fouling of the remedy system.
- Bench-scale testing the process of caustic additions should be conducted using 25 percent caustic (or the final strength/type of caustic selected for the Remedy-produced Water Conditioning Plant) to determine the dose needed to drive the pH of the treated water to the optimal pH between 9.7 and 10 for the chemical softening process.
- Bench-scale testing of the reactor clarifier to determine the effectiveness of the chemical softening processes (coagulation, flocculation, and sedimentation), and what the optimal pH and additional hydraulic residence time is. This testing should also be used to determine if a coagulant or flocculant is needed to aid with solids settling and any possible benefits of solids recycling.
- Bench-scale testing with single or multimedia filters (such as a column test) to determine the effectiveness of the media in lowering levels of iron, manganese, and solids in the clarifier effluent, and to verify the filter sizing, loading rates, and backwash regimen. These results could also affect the size of the treated water tank and cone bottom decant tank.
- Bench-scale testing the process of acidification should be conducted using 19 percent hydrochloric acid (or the final strength/type of acid selected for the Remedy-produced Water Conditioning Plant) to determine the dose needed to drive the pH of the treated water to 7.5 (or an alternative target pH determined from other bench-scale testing).
- Bench-scale testing of media filters backwash water using the Imhoff Cone Test to determine the effectiveness and rate of solids settling in the cone bottom decant tank. Based on these testing results, further analysis should be conducted to determine the necessity of a polymer addition to aid in solids settling. Testing should then be further conducted to determine the appropriate polymer and regimen for use. If the cone bottom decant tank and polymer are unsuccessful, an alternative option such as a low-profile clarifier may be considered.
- Bench-scale testing the process of acidification should be conducted using 19 percent hydrochloric acid (or the final strength/type of acid selected for the Remedy-produced Water Conditioning Plant) to determine the dose needed to drive the pH of the treated water to 7.5 (or an alternative target pH determined from other bench-scale testing).

Based on the results of the tests listed above, the need for additional and/or alternative testing may be determined and should be conducted as warranted. The conceptual design is conservative in assuming that iron, manganese, calcium and magnesium will all contribute to scaling in pipelines. However, if bench-scale testing determines that one or more or the constituents are not affecting remedy performance, equipment and process steps may need to be modified accordingly.

5.0 Design Information

Process calculations used to develop the design criteria were prepared using the estimated water quality in the NTH IRZ injection wells. Conceptual design information is presented in Tables 2 and 3 and on Figures 1a, 1b, and 2 attached at the end of this TM.

6.0 References

AdEdge Technologies, Inc. 2004. *AD26 Systems for Iron, Manganese, Sulfide and Arsenic Removal*. February.

American Water Works Association. 1999. *Water Quality & Treatment*. R. Letterman, Editor.

ARCADIS. 2013. *PG&E Topock Compressor Station, Needles, California, Floodplain Reductive Zone In Situ Pilot Test, 2013 Annual Monitoring Report*. October 11.

CH2M HILL. 2013. *Basis of Design Report/Intermediate (60%) Design Submittal for the Final Groundwater Remedy, PG&E Topock Compressor Station, Needles, California*. April.

CH2M HILL. 2014. *Basis of Design Report/Pre-Final (90%) Design Submittal for the Final Groundwater Remedy, PG&E Topock Compressor Station, Needles, California*. In preparation.

MWH. 2005. *Water Treatment: Principles and Design*. 2nd ed. Hoboken, New Jersey, John Wiley & Sons, Inc.

Odell, Lee. 2009. *Optimizing Iron and Manganese Removal*. Unpublished Technical Memorandum.

Tables

TABLE 1
Summary of Floodplain Water Quality
Contingent Dissolved Metals Removal System Conceptual Design Basis TM
PG&E Topock Compressor Station, Needles, California

		Floodplain Anoxic Wells[1]				In-Situ Pilot Test[3]			IM-3 Influent[4]			Dissolved Metals Removal System					
Parameter	Units	Minimum Detected Value	Mean Value	Maximum Detected Value	BTV[2]	Minimum Detected Value	Mean	Maximum Detected Value	Minimum Value	Mean	Maximum Value	Minimum Value	Expected Influent Value[5]	Upper Expected Influent Value[5]	Maximum Value	Justification for Expected Value	Justification for Upper-Expected Value
Calcium	mg/L	26.2	304	1220	NC	78.9	241	432	200	230	260	26.2	304	432	1,220	Mean value of Floodplain Anoxic Wells data	Maximum of In-Situ Pilot Test data
Iron	mg/L	0.09	2.6	13.9	14.6	0.058	3.80	34.3	0.02	0.064	0.5	0.02	2.56	14.6	34.3	Mean value of Floodplain Anoxic Wells data	BTV of Floodplain Anoxic Wells data
Magnesium	mg/L	6.43	99	586	NC	9.58	47.1	214	29	32	35	6.43	99	214	586	Mean value of Floodplain Anoxic Wells data	Maximum of In-Situ Pilot Test data
Manganese	mg/L	0.006	NC	2.2	2.5	0.002	1.74	11.3	0.0078	0.0098	0.01	0.002	1.74	2.5	11.3	Mean value of In-Situ Pilot Test data	BTV of Floodplain Anoxic Wells data
Alkalinity	mg/L (as $CaCO_3$)	--	--	--	--	27.5	160	880	140	156	210	27.5	160	880	880	Mean value of In-Situ Pilot Test data	Maximum of In-Situ Pilot Test data
Chloride	mg/L	104	2,600	12,600	NC	798	2,558	5,210	2,100	2,260	2,500	104	2,600	5,210	12,600	Mean value of Floodplain Anoxic Wells data	Maximum of In-Situ Pilot Test data
Sulfate	mg/L	240	789	2,420	2,360	1	488	1,130	500	532	550	0.931	789	2,360	2,420	Mean value of Floodplain Anoxic Wells data	BTV of Floodplain Anoxic Wells data
pH	pH units	6.88	NC	8.05	8.05	--	--	--	7.1	7.4	7.9	6.88	7.4	8.05	8.05	Mean value of IM-3 Influent data and calculated midpoint of Floodplain Anoxic Wells data	BTV of Floodplain Anoxic Wells data
Temperature	degrees Celsius	--	--	--	--	--	--	--	--	--	--	--	29	31	--	Estimated from IM-3 field records	Estimated from IM-3 field records
Total Dissolved Solids (TDS)	mg/L	736	NC	21,500	25,000	1,820	5,524	11,400	4,000	4,520	5,100	736	6,000	11,400	21,500	Mean of In-Situ Pilot Test data rounded up to the nearest thousand	Maximum of In-Situ Pilot Test data

Notes:

[1] Data collected from Topock monitoring wells located in the Floodplain Area that are situated in anoxic groundwater conditions, through November 2013. Remedy-produced water entering the DMRS will largely be extracted from wells in the Floodplain Area or wells in anoxic conditions.

[2] The background threshold value (BTV) is the upper limit estimate of the background concentration of the constituent based on statistical analysis.

[3] Data collected from Floodplain Reductive Zone In-Situ Pilot Test from March 2006 to July 2013 (ARCADIS, 2013). Data represent the changing groundwater conditions over time due to the injection of a food-grade reagent mixture into groundwater, which is what will be implemented in the final groundwater remedy.

[4] Data collected from the influent of the Topock Interim Measure 3 (IM-3) groundwater treatment system. Data are from a total of 11 samples collected between June 2009 and June 2012. Wells that feed IM-3 are situated in generally more oxic groundwater conditions than the expected anoxic conditions of the remedy-produced water. Therefore, IM-3 influent data are the least significant of the datasets presented. Nondetect concentrations are included in the minimum, maximum, and mean value calculations at their reporting limits.

NC = Not calculated

-- = Not available

TABLE 2
Conceptual Design Criteria for Contingent Dissolved Metals Removal System
Contingent Dissolved Metals Removal System Conceptual Design Basis TM
PG&E Topock Compressor Station, Needles, California

Subject	Criteria	Comments/Reason
OPERATIONAL CRITERIA		
Maximum Process Flow Capacity	35 gpm	
Average Process Flow Capacity	20 gpm	
Average Daily Flow – Well Rehabilitation Period (22 weeks/year)	29,645 gallons	A side water is processed 4 days of the week. Assume annual well rehabilitation takes place for continuous period of time limiting the number of days routine backwashing can occur..
Average Daily Flow – Rest of the year (30 weeks/year)	17,145 gallons	A side water is processed 4 days of the week during normal backwashing operations.
Annual Flow	4,670,000 gallons	
SITE CIVIL		
Location	Remedy-produced Water Conditioning Plant at PG&E Topock Compressor Station near Needles, California.	
Building Finish Floor Elevation	Finished first floor, Elevation 626 feet (NGVD88). Finished second floor, Elevation 640 feet (NGVD88)	
Grading	Longitudinal Slopes: Minimum 1% away from structures (2% desirable).	
Vehicle Access	WB 50 (turning radius for semi-truck and trailer with 50-foot wheel base). Highway truck (wheel loading on access roadways and parking areas). 50-foot minimum turning radius. Designated site accommodates truck circulation. Roads will be constructed at new facility for maintenance activities.	Required for delivery of chemicals, pumps, motors, and fire vehicles.
Site Constraints	Proposed facility located within the boundary of the compressor station. Access to all critical compressor station facilities must be maintained.	No modifications to the perimeter site fence or entrance gate will be made.
Parking	No parking will be required for new facility.	
Pedestrian Traffic	Limited to paved roadways, sidewalks are not located between existing facilities.	
PROCESS EQUIPMENT, MOTORS, VALVES, AND ANCILLARIES		
Treatment Process	Partial caustic softening to remove calcium and magnesium hardness and iron and manganese. This will be accomplished largely in a solids contact clarifier or package treatment unit. Process steps include rapid chemical mixing, softening reaction, coagulation, flocculation, settling, sludge recirculation, and sludge withdrawal. Effluent is filtered in media and cartridge filters to achieve desired effluent quality.	Design criteria listed below are what is expected from planned pre-purchase bid, but not a guarantee of what equipment will be selected. The information in this section will be verified during the detailed design.

TABLE 2
Conceptual Design Criteria for Contingent Dissolved Metals Removal System
Contingent Dissolved Metals Removal System Conceptual Design Basis TM
PG&E Topock Compressor Station, Needles, California

Subject	Criteria	Comments/Reason
Softening Treatment		
Treatment Objective	Hardness and iron and manganese removal	Primary iron and manganese removal will be through media filters, but some removal will be accomplished in softening step.
Number of Clarifier Units	One	Package treatment unit designed for chemical softening
Number of Media Vessels	Two	Single or multimedia vessels designed for solids removal
Reaction Zone Residence Time	35 to 40 minutes	Allow additional time to counteract reduced rate caused by salty (high TDS) groundwater
Rise Rate	0.75 gpm/square foot	
Materials of Construction	Carbon steel vessels with internal epoxy lining skid-mounted on structural steel frame	
Performance Targets		
Effluent Iron Concentration	< 0.15 mg/L	This performance target is for media filter effluent. Empirical evidence shows that Fe concentrations > 0.15 mg/L cause scaling
Effluent Manganese Concentration	< 0.02 mg/L	This performance criterion is for media filter effluent. Empirical evidence shows that Mn concentrations > 0.02 mg/L cause scaling
Effluent Calcium Concentration	< 200 mg/L	By definition, calcium carbonate precipitation potential (CCPP) < 0 mg/L indicates that calcium carbonate is undersaturated in solution. The WaterPro™ model indicates that CCPP < 0 when calcium concentrations <200 mg/L and with the remaining parameters are at their “expected” values.
Caustic Feed System		
Chemical Feed System	One chemical feeder system— high-density cross-link polyethylene (HDXLPE) tank and pump skid with duplex pumps, controller, and panel with 120 volt receptacle. Sized for up to 10 gph. Tank sized for minimum one month’s storage (approximately 55 gallons)	Assumed able to use all of planned Remedy-produced Water Conditioning caustic feed system.
Safety Equipment	One eyewash and shower unit	Use planned 2nd floor unit
Coatings/Finishes	Chemical resistant coatings in chemical areas	
Controls	Chemical feed pump speed control and tank level controls	

TABLE 2
Conceptual Design Criteria for Contingent Dissolved Metals Removal System
Contingent Dissolved Metals Removal System Conceptual Design Basis TM
PG&E Topock Compressor Station, Needles, California

Subject	Criteria	Comments/Reason
Acid Feed System		
Chemical Feed System	One chemical pump system —Pump skid with duplex pumps, controller, and panel with 120 volt receptacle. Sized for up to 0.01 gph. Tank not needed due to low demand of 15 gallons per year.	Assumed able to use all of planned Remedy-produced Water Conditioning acid feed system.
Safety Equipment	One eyewash and shower unit	Use planned 2nd floor unit
Coatings/Finishes	Chemical resistant coatings in chemical areas	
Controls	Chemical feed pump speed control and tank level controls	
Backwash Tank and Treated Water Tank		
Number	Two	One cone bottom tank (Backwash Tank) and one flat bottom tank (Treated Water Tank).
Material	Fiberglass Reinforced Plastic (FRP)	An ultra-high molecular weight coating may be considered for the inside surface of the cone bottom tank (Backwash Tank) to improve the slickness of the surface for solids to settle onto.
Capacity	1,000-gallon tanks	Backwash is anticipated to be approximately 470 gallons per vessel (940 gallons total per day) – 10 minutes of backwashing at 15 gpm/ft^2 or 5 minutes of backwashing at 30 gpm/ft^2 depending upon filter media. Backwash tank will have cone bottom to aid in solids recovery and improve backwash recycle rate.
Static Mixer		
Number	As required	
Diameter	2-inch	
Type	Wafer style with integral injection ports	
Piping Materials		
Process	HDPE SDR 11 or CPVC Schedule 80, per ASTM D1784, ASTM D1785, and NSF/ANSI 14 and NSF 61 listed	
Potable Water	Buried: Copper, Type K, per ASTM B88 Exposed: Copper, Type L, per ASTM B88 or CPVC Sch. 80	
Process Piping Installation	Major process piping headers will be installed in pipe trenches inside the treatment building and buried outside the building. Media vessel piping will be aboveground. Actuated valves will be installed above grade whenever possible.	

TABLE 2

Conceptual Design Criteria for Contingent Dissolved Metals Removal System

Contingent Dissolved Metals Removal System Conceptual Design Basis TM
PG&E Topock Compressor Station, Needles, California

Subject	Criteria	Comments/Reason
YARD PIPING		
Design Criteria	Appendix C, 90% Basis of Design Report (CH2M HILL, 2014)	
CORROSION CONTROL		
Design Criteria	Appendix C, 90% Basis of Design Report (CH2M HILL, 2014)	
ARCHITECTURAL/STRUCTURAL		
Building Code	Appendix C, 90% Basis of Design Report (CH2M HILL, 2014)	
Building Construction Materials	Appendix C, 90% Basis of Design Report (CH2M HILL, 2014)	
Loads	Appendix C, 90% Basis of Design Report (CH2M HILL, 2014)	
HVAC		
Codes/Standards	Appendix C, 90% Basis of Design Report (CH2M HILL, 2014)	
Design Conditions		
Site Elevation	See Section C.2 Civil, Appendix C, 90% Basis of Design Report (CH2M HILL, 2014)	
Cooling Load Basis	Building envelope heat gain and internal heat gains from equipment.	
System Type		
Process Building	None.	
PLUMBING		
Lavatory/Toilet Room	No facilities provided.	
Potable Water	Existing emergency shower/eye wash station available on 2nd floor of building.	Per 2010 California Plumbing Code, and ANSI Z358.1.
Non-potable Water	The non-potable water supply will have a reduced pressure backflow preventer. Non-potable water will be supplied for wash down water. Wash down hose valves, hoses and hose racks will be furnished in the area as required.	Per 2010 California Plumbing Code.

TABLE 2
Conceptual Design Criteria for Contingent Dissolved Metals Removal System
Contingent Dissolved Metals Removal System Conceptual Design Basis TM
PG&E Topock Compressor Station, Needles, California

Subject	Criteria	Comments/Reason
ELECTRICAL		
Electrical Load	The electrical load will consist of process pumps, motor operated valves, filter system, control panel and instrumentation. Power distribution will be sized in accordance with NFPA 70 (National Electric Code) to operate process and facility loads. Short-circuit current interrupting capacity of power distribution equipment will be coordinated with existing power distribution system.	.
Service Voltage	480V, 3-phase, 3-wire power will be supplied from XFMR 099	
Utilization Voltage	Appendix C, 90% Basis of Design Report (CH2M HILL, 2014)	
Redundancy Requirements	Power distribution system redundancy will be limited to equipment supporting the operation of back-up process and facility equipment (i.e. motor control combination starters, and breakers,). Power distribution system will incorporate spare breakers and fuses. Supporting quick replacement of failed components.	.
Manufacturers of Electrical Equipment, Grounding, Lightning Protection, Illumination, Emergency Lights, Stand-by/Backup Power, Raceways, and Duct Banks	Appendix C, 90% Basis of Design Report (CH2M HILL, 2014)	
SECURITY		
Security	None	All security covered through TCS main facility
CONTROL AND TELEMETRY		
Control and Telemetry Design Criteria	The treatment vessels will be a packaged system with the equipment manufacturer providing a fully configured programmable logic controller based system control panel with panel-mounted operator interface terminal. The control panel will be specified with an uninterruptible power supply to provide true online conditioned power sized to operate the connected load for 30 minutes.	
Communications, Other Networks, Supervisory Control and Data Acquisition, Instrumentation	Appendix C, 90% Basis of Design Report (CH2M HILL, 2014)	

TABLE 2
Conceptual Design Criteria for Contingent Dissolved Metals Removal System
Contingent Dissolved Metals Removal System Conceptual Design Basis TM
PG&E Topock Compressor Station, Needles, California

Subject	Criteria	Comments/Reason
Environmental Requirements	Equipment and instrumentation will be suitable for the following conditions: • Non-air-conditioned Spaces: 0°C to 50°C and a relative humidity of 10 to 95 percent. • Outdoors: 0°C to 60°C and a relative humidity of 5 to 100 percent.	Environmental controls, such as heaters, fans, and air conditioning will be provided to maintain equipment within the operating conditions recommended by the manufacturer.
Standards/References	Appendix C, 90% Basis of Design Report (CH2M HILL, 2014)	

TABLE 3
Preliminary Major Equipment List
Contingent Dissolved Metals Removal System Conceptual Design Basis TM
PG&E Topock Compressor Station, Needles, California

Quantity	Name	Description
2	Single or Multimedia Filter Vessels	2 foot diameter carbon steel vessels with internal epoxy lining skid-mounted on a structural steel frame (maximum of 6 gpm/sq. ft. feed hydraulic loading rate and 15 to 30 gpm/sq. ft. backwash hydraulic loading rates)
1	Package treatment unit designed for chemical softening	Carbon steel epoxy coated internals. Functions include softening, coagulation, flocculation, settling, sludge recirculation, and sludge withdrawal. Complete with mixers, scrapers and other mechanical equipment (sludge pump). Automatic operation with built in control panel and digital controller allowing communication/control to Remedy SCADA.
1	Chemical Feed System	No new equipment needed; use planned acid and caustic feed systems
2	Media Filter Feed Pumps	Duplex centrifugal pumps
1	Duplex cartridge filters with replaceable elements	Package unit with differential pressure indication and alarm, automated valves (pneumatic type), and electric actuated purge valves
2	Backwash Recycle Pumps	Duplex centrifugal pumps
1	Treated Water Tank	Flat bottom 1,000 gallon fiberglass reinforced plastic tank
1	Backwash Tank	Cone bottom 1,000 gallon fiberglass reinforced plastic tank provided with tank support
1	Backwash Solids Pump	Air operated diaphragm pump
1	Softener Clearwell	250 gallon HDPE tank, flat bottom
2	Backwash Pumps	Duplex centrifugal pumps
2	Treated Water Pumps	Duplex centrifugal pumps
1	Polymer System (contingency)	Pre-engineered skid with chemical metering pumps for polymer

Figures

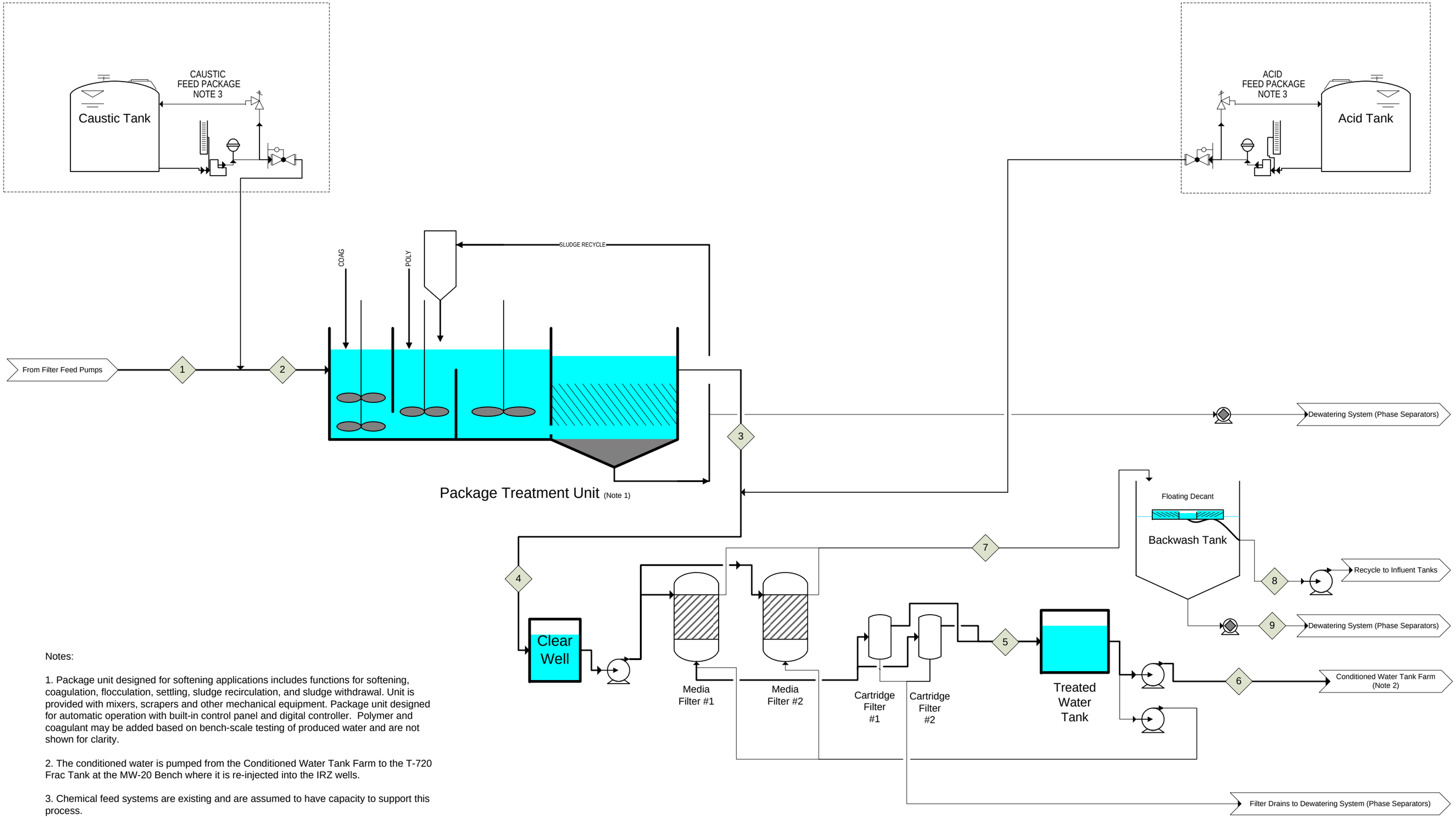

Notes:

1. Package unit designed for softening applications includes functions for softening, coagulation, flocculation, settling, sludge recirculation, and sludge withdrawal. Unit is provided with mixers, scrapers and other mechanical equipment. Package unit designed for automatic operation with built-in control panel and digital controller. Polymer and coagulant may be added based on bench-scale testing of produced water and are not shown for clarity.

2. The conditioned water is pumped from the Conditioned Water Tank Farm to the T-720 Frac Tank at the MW-20 Bench where it is re-injected into the IRZ wells.

3. Chemical feed systems are existing and are assumed to have capacity to support this process.

CH2MHILL

FIGURE 1a

Process Flow Diagram

Contingent Dissolved Metals Removal System Conceptual Design Basis Memorandum
PG&E Topock Compressor Station, Needles, California

Stream #:	1	2	3	4	5	6	7	8	9
Parameter	From Filter Feed Pumps	To the Package Treatment Unit	Downstream of Package Treatment Unit	To Clear Well	To Treated Water Tank	To Conditioned Water Tank Farm	To Backwash Tank	Recycle to Influent Tank Farm	To the Liquid Phase Separators
Maximum Flowrate (gpm)	35	35	35	35	35	35	94	12	--
Nominal Flowrate (gpm)	20	20	20	20	20	20	94	12	--
Iron (mg/L)	2.56	2.56	2.56	2.56	0.15	0.15	0.15	0.15	--
Iron (lbs/yr)	100	100	100	100	5.8	5.8	5.8	5.8	--
Manganese (mg/L)	1.74	1.74	1.74	1.74	0.02	0.02	0.02	0.02	--
Manganese (lbs/yr)	67.8	67.8	67.8	67.8	0.8	0.8	0.8	0.8	--
Calcium (mg/L)	304	304	200	200	200	200	200	200	104
Calcium (lbs/yr)	11840	11840	7790	7790	7790	7790	7790	7790	4,051
Magnesium (mg/L)	99	99	99	99	99	99	99	99	--
Magnesium (lbs/yr)	3856	3856	3856	3856	3856	3856	3856	3856	--
pH	7.40	9.70	9.70	7.5	7.5	7.5	7.5	7.5	--
Caustic (mg/L)	--	93	93	--	--	--	--	--	--
Caustic (gal/year)	--	340	340	--	--	--	--	--	--
Hydrochloric Acid (mg/L)	--	--	3.6	3.6	--	--	--	--	--
Hydrochloric Acid (gal/year)	--	--	15	15	--	--	--	--	--
Sludge (mg/L)	--	--	--	--	--	--	260	--	260
Sludge (tons/yr)	--	--	--	--	--	--	168	--	168

Assumptions

Annual water flow 4.67 million gallons

Media filter backwash daily frequency at a rate of 94 gpm or 30 gpm/sf

Number of media filter vessels in service - 2

No magnesium is assumed to precipitate due to pH conditions. Iron and manganeses quantities are neglected in sludge mass due to small contribution

Sludge concentration is 3% solids

CH2MHILL

FIGURE 1b

Mass Balance

Contingent Dissolved Metals Removal System Conceptual Design Basis Memorandum

PG&E Topock Compressor Station, Needles, California

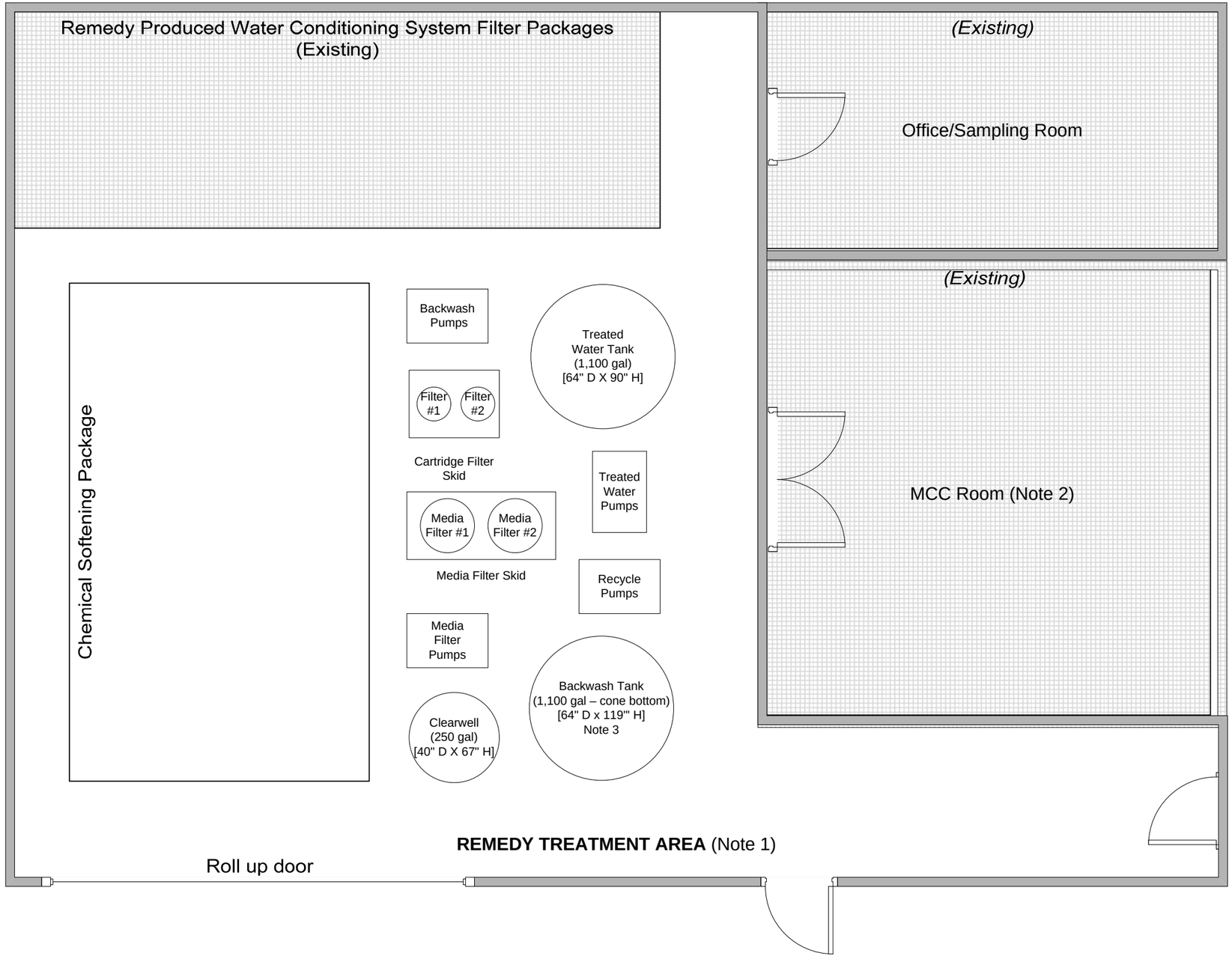

Notes:
1. Total 2nd floor space approximately 32" x 28 based on building column spacing.
2. Shower/eyewash located outside of MCC, near wall between MCC and Office/Sampling Room (not shown for clarity).
3. Solids pump is located beneath the Backwash Tank.

CH2MHILL

Scale: 1/4" = 1'-0"

0 ft. 3 ft. 5 ft. 10 ft.

FIGURE 2
General Arrangement
Contingent Dissolved Metals Removal System Conceptual Design Basis Memorandum
PG&E Topock Compressor Station, Needles, California

Appendix B
Addendum to Freshwater Pre-injection Treatment System Conceptual Design Basis

Addendum to Freshwater Pre-injection Treatment System Conceptual Design Basis PG&E Topock Compressor Station, Needles, California



PREPARED FOR: Pacific Gas and Electric Company

PREPARED BY: CH2M HILL

DATE: August 28, 2014

1.0 Introduction

Since the submittal of the 60% design of the Pacific Gas and Electric Company (PG&E) Topock Compressor Station (TCS) (CH2M HILL 2013), the State Water Resources Control Board (State Board) has issued a decision letter on November 20, 2013, and the California Department of Toxic Substances Control (DTSC) has provided direction in its comment on the 60% design (#145 DTSC-50) that will include an arsenic pre-treatment contingency as part of the 90% design. In compliance with this DTSC directive, this technical memorandum (TM) presents the design basis for a potential future pre-treatment option for freshwater.

This option assumes that the primary source is groundwater from well HNWR-1A and the secondary source is groundwater from wells HNWR-1 or Site B. All three freshwater supply wells are located in Arizona. This assumption will be revisited after completion of the alternative freshwater source evaluation—the field work is currently under way. The potential future treatment system, referred to herein as the freshwater pre-injection treatment system (FWPTS), will be located in the vicinity of the planned remedy-produced water-conditioning plant. All components of the FWPTS are located on previously disturbed areas within the PG&E-owned parcel.

The treatment goals of the FWPTS are arsenic removal to concentrations less than the federal and California maximum contaminant level (MCL) of 10 micrograms per liter (µg/L) (California Department of Public Health, 2013). This TM discusses the evaluation of available treatment technologies for arsenic; the selection of technologies for bench-scale testing; the results from bench-scale testing at CH2M HILL's Applied Science Laboratory (ASL) in Corvallis, Oregon; and the design basis/design criteria for the FWPTS. This document also includes a process flow diagram, a preliminary equipment layout, and a preliminary list of key equipment.

The design information presented herein has been developed based on Topock-specific information (that is, bench-scale testing results of HNWR-1 water) and experience in designing and operating arsenic groundwater treatment systems on non-Topock projects. Because of its location, the potential future FWPTS will be designed to achieve a safe, harmonious, and sustainable operation within TCS. Engineering design details of the FWPTS are included in the 90% design.

2.0 Freshwater Water Quality, Treatment Goals, and Design Flow Rates

For the purpose of this conceptual design, it is assumed that the water quality from the future supply well (HNWR-1A) in Arizona is similar to that of the HNWR-1 well. PG&E has collected and analyzed six samples from HNWR-1 starting in November 2010. Analytical results from November 2010 through February 2014 indicate that the naturally-occurring arsenic concentrations in HNWR-1 water were 14-16 µg/L, greater than the federal and California MCL of 10 µg/L arsenic. Tables 1A and 1B summarize available analytical results for HNWR-1 (all tables and figures are presented at the end of this TM). As previously mentioned, the treatment goals for the FWPTS are to remove arsenic to concentrations less than 10 µg/L.

The total freshwater supply flow rates are based on the sum of the modeled freshwater flows into the Freshwater and Inner Recirculation Loop injection wells. The FWPTS will be designed to treat freshwater for remedy injection only. Exhibit 1 shows the FWPTS design flow rates.

EXHIBIT 1
Design Flow Rates
Addendum to Freshwater Pre-injection Treatment System Design Basis Memorandum
PG&E Topock Compressor Station, Needles, California

Element	Unit	Minimum Flow	Nominal Flow	Maximum Flow
Freshwater Pre-Injection Treatment System (FWPTS)	gpm	150	450	900

3.0 Evaluation and Selection of Treatment Technologies

For this conceptual design basis, PG&E has identified and evaluated proven treatment technologies for arsenic that are United States Environmental Protection Agency (USEPA) Best Available Technologies (USEPA 2001) and have been successfully used by municipalities and industry. Unproven technologies or technologies that have not been used in full-scale applications were not considered.

The initial list included nine technologies: anion exchange, activated alumina (AA) adsorbents, reverse osmosis (RO), electrodialysis reversal (EDR), lime softening, distillation, iron-based adsorbents, titanium-based adsorbents, and coagulation/filtration (see Exhibit 2). These technologies were evaluated and screened in a two-step process: (1) the initial screening was based on the experience of the engineering team with the individual technology, and (2) the second-level screening was based on a set of criteria - namely treatment effectiveness, reliability and flexibility[1], operational complexity, waste generation, footprint, and cost effectiveness. After completion of the technology screening and evaluation process, the AA technology with disposable and regenerable (AA) adsorptive media, coagulation filtration, and iron-based adsorbent granular ferric hydroxide (GFH) were selected for bench-scale testing. For more details of this screening and a description of the evaluation processes, see Attachment A.

EXHIBIT 2
Technologies Considered for Arsenic Removal
Addendum to Freshwater Pre-injection Treatment System Design Basis Memorandum
PG&E Topock Compressor Station, Needles, California

Technology	Evaluation Status
Anion exchange	Screened out, significant waste generation.
AA	Selected for bench-testing
Titanium-based adsorbents	Screened out, similar as other adsorbents considered, with less experience.
Reverse osmosis (RO)	Screened out, significant waste generation.
Electrodialysis reversal (EDR)	Screened out, significant waste generation.
Lime softening	Screened out, significant waste generation.
Distillation	Screened out, significant energy use and capital cost.
Coagulation filtration	Selected for bench-testing
Iron-based adsorbents	Selected for bench-testing

[1] Flexibility is defined as the ability of a system to respond to potential internal or external changes affecting its performance, in a timely and cost-effective manner. Also includes aspects such as handling changes in influent water quality and flowrates.

4.0 Summary of Bench-scale Testing Results

The objectives of bench-scale testing were to: (1) verify the effectiveness of each adsorptive media in removing arsenic from HNWR-1 water to the treatment goals, (2) understand the time to break through (critical for equipment sizing and waste management) for AA and GFH, (3) understand effectiveness of coagulation with a jar test, and (4) understand waste generation amounts. This section summarizes the testing and results to date as it relates to arsenic treatment.

To accomplish the first two objectives, CH2M HILL's ASL employs a testing procedure for evaluating adsorptive media effectiveness in removing arsenic in a small-diameter laboratory column analogous to the rapid small-scale column test method developed for assessing granular-activated carbon in a continuous flow system. This method significantly reduces the amount of time and water required for testing compared to pilot-scale and full-scale systems (USEPA 1996). A jar test was performed to evaluate the effectiveness of ferric chloride as coagulant.

A groundwater sample was continuously pumped, sampled, and collected in three 55-gallon drums from HNWR-1 well in early January 2013 and was shipped to ASL for bench-scale testing. The groundwater sample was processed continuously through the column, and the treated water was sampled and analyzed for arsenic until breakthrough (defined as at least 70 percent of the average influent concentration). After the first breakthrough, the media was regenerated, and the test was repeated. Two treatment cycles (termed Service Cycle 1 and Service Cycle 2) were conducted for regenerable AA (due to fluoride breakthrough caused by the greater affinity of fluoride versus arsenic to AA). Because of time constraints, not all media samples were able to be tested until arsenic breakthrough. In total, 133 liters of HNWR-1 well water were processed using disposable AA and 204 liters using GFH. These samples were tested for as long as time permitted in the laboratory. The rapid small-scale column test results provide information on adsorption capacity (extent of adsorption) and the rate of adsorption (adsorption kinetics), which are the two dominant factors affecting breakthrough in the media columns.

The rapid small-scale column test for arsenic removal was performed using the following media

- Regenerable AA (BASF AA-400G)
- Disposable AA (BASF AA-FS50)
- Alum-impregnated AA (AIAA)
- GFH

Prior to passing the water over the media, the groundwater was pretreated as follows: the pH was adjusted to 6.5 with hydrochloric acid and the water was injected with chlorine to maintain a residual concentration of 1 mg/L for 60 seconds (this is to oxidize any arsenite present in the water to arsenate), and was followed by inline filtration.

Column Testing Treatment Effectiveness and Time to Breakthrough

Figure 1 shows concentrations of arsenic in treated water versus the number of bed-volumes of groundwater passed through (one bed-volume is equivalent to the amount of adsorptive media in the column). During the first service cycle, the regenerable AA performs well, but in the second service cycle the effluent concentration begins to increase more rapidly indicating after the initial service cycle the media loses capacity to adsorb arsenic. Due to this fact and the difficulty in regenerating AA media which requires using strong chemicals like caustic and sulfuric acid increasing safety concerns, cost, and associated wastewater management[2], this method is eliminated from further analysis. The AIAA performed somewhat better than the regenerable AA, but not as well as the disposable AA media. The poorer performance and the additional effort to impregnate the alum onto the AA, eliminates this media from further evaluation. The disposable media performed well to more than 44,000 bed volumes, although the arsenic effluent concentration appears to have increased more than the effluent from the GFH media column.

To ascertain the relative performance of the two media, another figure was prepared (Figure 2), which shows the measured effluent concentration as a function of the amount of arsenic adsorbed on the treatment media. The amount of arsenic absorbed was calculated by multiplying the measured concentration in effluent samples by the volume of water passing through during the sampling interval and dividing by the mass of media in the column.

[2] The estimated wastewater volume ranged from 3.3 to 11 million gallons per year (CH2M HILL 2013).

The effluent concentration in the disposable AA, begins to rise rapidly when the adsorption reaches 0.4 µg/mg media where as in the GFH varies between 0.15 and 0.35 µg/mg media until the test was stopped. These results more clearly indicate GFH will perform better.

Jar Testing Results

Jar testing was performed to test arsenic removal by coagulation with ferric chloride. Water samples were pre-oxidized with free chlorine dosed to provide approximately 1 mg/L free chlorine residual for 60 seconds prior to ferric chloride addition and mixing. Ferric chloride was added to reach doses 5, 10, 15, and 20 mg/L. The mixers were run at 70 revolutions per minute (rpm) for 30 seconds followed by 25 rpm for 20 minutes. The samples were then filtered through a 0.45 micron filter and the filtered water tested for arsenic and pH.

Figure 3 shows the arsenic concentration versus ferric chloride dose applied during testing. Jar testing demonstrated that arsenic could effectively be removed to <10 µg/L with ferric chloride dosed to 5 mg/L.

Process Selection

As shown above, the GFH was effective at removing arsenic to below the treatment goals (the federal and California MCL of 10 µg/L). The effluent remained less than 1 µg/L of arsenic for over 70,000 bed-volumes. The GFH media performed better than the disposable AA offering longer running periods between media change-outs. Coagulation and filtration although effective creates a solid waste stream 5 times greater than GFH that must be transported and disposed of off-site and is more difficult to operate. Based on these reasons, GFH was selected for the FWPTS design.

Section 5 discusses the treatment and backwash process in more details and provides a summary of the sustainability factors.

5.0 Freshwater Treatment Process and System Description

As previously mentioned, GFH was selected as the treatment technology to be carried forward into the design of the FWPTS. GFH is a granular, ferric-based, non-regenerative media that adsorbs arsenic and other heavy metal ions from solution. The USEPA has identified GFH as an effective media to remove arsenic (USEPA 2003). This section describes the design philosophy, the treatment process, and the system configuration envisioned at this stage. This section also discusses the uncertainties with the ongoing design and the work that is currently underway or being planned to address these uncertainties.

5.1 Treatment System Description

Groundwater will be pumped and conveyed from the future water supply well in Arizona to the remedy freshwater storage tank. Water will be pumped from this tank and will be injected with hypochlorite for arsenic oxidation and with acid to reduce pH to 6.5; both hypochlorite and lower pH improve arsenic removal in the media vessels. After chemical injection, water will be passed through cartridge filters to remove solids that would otherwise clog the media, reducing performance and runtime. With the solids removed, the water will be divided into two or three streams (nominal or maximum flow) and each will be processed through a single treatment media vessel (configured in parallel) in a downward flow direction. Automatic valves will divert the flow to the proper vessels and will control the flow rate into each in service vessel. During nominal flow, the third and treatment media vessel will be in standby mode. During maximum flow, three treatment media vessels will be operating.

PG&E evaluated dechlorination alternatives to remove residual chlorine from the treated freshwater. The reason for this step is to prevent the dechlorination chemicals in the freshwater plume from adversely effecting microorganisms in the remediation zones. Dechlorination is often accomplished by addition of commonly used chemicals such as ascorbic acid, calcium thiosulfate, and hydrogen peroxide. The evaluation included cost-effectiveness and safety issues related with handling and storage, and the results showed calcium thiosulfate was the best. The equipment needed include chemical storage tanks or totes, metering pumps, and an inline static mixer. Due to climate condition at Topock, the equipment would be housed in an air-conditioned storage building.

5.2 Media Backwash & Replacement Process

The amount of wastewater generated is primarily a function of backwash frequency. Backwashing prevents over compaction of the media bed enabling good flow conditions. The media bed should be backwashed once a month for proper media maintenance. Backwashing occurs in an upflow mode, the reverse of normal forward down-flow operation. Once the backwash process is complete, normal forward down-flow operation may resume. Each media vessel backwash process is expected take ten minutes.

At some point during treatment operations, the media will lose its adsorptive capacity and will need to be replaced. Based on bench scale testing, this point is anticipated to be after more than 70,000 bed-volumes or about 8 months at maximum flow rates. The actual replacement frequency will be determined during full-scale operation. For the purpose of the conceptual design, it is assumed that the media will be replaced once a year. Spent media will be removed from each vessel and sent to a landfill. Prior experience operating GFH treatment process shows the spent media is not hazardous (Ela 2006). Waste characterization testing will be performed in accordance with state and federal requirements and facility waste acceptance procedures. Virgin media will be placed in the media vessel and normal forward down-flow operation may resume.

Wastewater & Solid Waste Generation

The volume of wastewater needing to be managed is estimated based on the following assumptions:

- Backwash rate is 15 gpm/sq. ft. and vessel cross section area is 50 sq. ft.
- Backwashing time is 10 minutes resulting in 7,550 gallons per backwash
- Four vessels backwashed monthly at 900 gpm and two vessels backwashed monthly at 450 gpm
- 95 percent of the backwash water is recycled to the beginning of the process

At 450 gpm – 7,550 gallons/backwash x 2 vessels per month x 12 months per year x 5% = 9,000 gallons per year

For 900 gpm – 7,550 gallons/backwash x 4 vessels per month x 12 months per year x 5% = 18,000 gallons per year

The remaining (5 percent of the) backwash water can be discharged to the TCS evaporation ponds or disposed offsite at permitted facilities. There is no need to treat or neutralize the pH of the discharged backwash water as it will be within acceptable ranges. Treated water is used for backwashing and no arsenic desorbs from the media during the backwashing process. Discharged backwash water will have more solids compared to the treated water but it will be able to be pumped to the TCS evaporation ponds or disposed offsite without treatment.

Periodic disposal of the spent GFH media would be required also as a solid waste stream. Based on the bench testing, this would be no more frequently than every 8 months, but is expected to be less frequent. For the purposes of this conceptual design, it is assumed that the media will require annual replacement. The mass of solid waste to be managed

- The media has a specific gravity of 1.1 with water density of 62.4 pounds per cubic foot
- Each vessel has 200 cubic feet of media
- Four vessels need replacement at a rate 900 gpm and 2 vessels at a rate of 450 gpm

At 450 gpm – 200 cubic feet/vessel x 2 vessels per year x 1.1 x 62.4 pounds per cubic foot / 2,000 tons/pound = 13.7 tons per year

At 900 gpm – 200 cubic feet/vessel x 4 vessels per year x 1.1 x 62.4 pounds per cubic foot / 2,000 tons/pound = 27.5 tons per year

5.3 Chemical and Media Use

Chemicals will be used in the treatment system. Chlorine in the form of calcium hypochlorite tablets is used to oxidize arsenite to arsenate. Arsenate is more readily removed by the treatment process. Acid is used in pretreatment to improve adsorption by lowering the pH to about 6.5. The estimated chemical use is shown in Exhibit 3.

EXHIBIT 3
Annual Chemical Usage Rates
Addendum to Freshwater Pre-injection Treatment System Design Basis Memorandum
PG&E Topock Compressor Station, Needles, California

Flow Case	Flowrate, gpm	Hypochlorite, pounds/year	93% Sulfuric Acid, gallons/year	Calcium Thiosulfate
Nominal	450	3,500	5,150	2,550
Maximum	900	7,000	10,300	1,275

5.4 Sustainability Summary

For each of the treatment plant operating scenarios (450 and 900 gpm), sustainability parameters such as waste generation, chemical usage, energy use, and greenhouse gas emissions were estimated for the FWPTS as shown on Exhibit 4.

EXHIBIT 4
Sustainability Summary [a]
Addendum to Freshwater Pre-injection Treatment System Design Basis Memorandum
PG&E Topock Compressor Station, Needles, California

	Operations								Construction	
Treatment Case	Chemical Truck Trips	Solid Waste Truck Trips	Electricity, kw-hr/yr	Wastewater Generation, MG/yr	Solid Waste Generated, tons/ year[b]	Chemical Use, gal/yr	Total Miles/ year	Emissions, CO2 eq, Tons/year[c]	CO2 eq, Tons [d]	Footprint, sf [e]
450 gpm	20	2	280,000	Minimal	17	21,300	7,000	180	210	2,400
900 gpm	39	~3	320,000	Minimal	33	42,500	13,000	200	250	3,900

Notes:
Units: kw-hr/year = kilowatt-hours per year; MG/yr = million gallons per year; gal = gallons; sf = square feet; gpm=gal per minute; CO2 eq – carbon dioxide equivalent
[a] Previously submitted on March 29, 2013. Additional effects for using a dechlorination agent if required will be added to this table in the 90% design submittal.
[b] Solid waste includes spent filter cartridges (500 to 1,000 per year)
[c] Operational emissions include vehicle emission and electricity generation
[d] Construction includes site work, material delivery, and workers travel
[e] Footprint based on foundations for building, process tanks, and chemical storage

5.5 Controls Philosophy

The system will be automated to reduce the need for continuous operator oversight. Electronic notifications will be sent automatically to on-site operators that notify them of system alarms, shutdown, or other issues. System automation will be controlled using a programmable logic controller that will communicate with the groundwater remedy supervisory control and data acquisition system. Pneumatic valves will be automated to control flow. Online pH, turbidity, and conductivity sensors will be incorporated to enable remote process monitoring and control. Arsenic cannot be monitored using an online analyzer. Grab samples will be collected periodically and analyzed using a bench top colorimetric instrument in the sample room (located in the Remedy Produced Water Conditioning Building) to monitor arsenic levels.

5.6 Other Related Systems and Infrastructure

Electricity will be provided from the Compressor Station. The new FWPTS location will have a heating, ventilation, and air conditioning (HVAC) system for only critical equipment such as electrical and controls equipment.

5.7 Design Philosophy/Uncertainties in Design

As previously mentioned, the FWPTS will be designed to achieve a safe, efficient, and sustainable operation within the compressor station over the anticipated decades-long life of the remedy. Most of the uncertainty in the design is related to the bed life and adsorptive capacity of the media. Based on bench testing, it is anticipated that the media will not need to be replaced before 70,000 bed volumes are processed– or every 8 months. The actual adsorptive capacity will need to be determined during full-scale operation and the result will greatly influence the amount of wastewater and solid waste generated by the process.

6.0 Design Information

Process calculations used to develop the design criteria were prepared using the conservative assumption that the treatment vessels each needed to be backwashed once a month and media replaced annually. Conceptual design information is presented in Tables 2, 3, and 4 and on Figures 4, 5, and 6.

7.0 References

California Department of Public Health. 2013. "Comparison of MCLs and PHGs for Regulated Contaminants in Drinking Water" Web page. Online: http://www.cdph.ca.gov/certlic/drinkingwater/Pages/MCLsandPHGs.aspx. Accessed March 22.

CH2M HILL. 2009. *Groundwater Background Study, Steps 3 and 4: Revised Final Report of Results, PG&E Topock Compressor Station, Needles, California*. November 6.

_____. 2013. *Basis of Design Report/Intermediate (60%) Design Submittal for the Final Groundwater Remedy, PG&E Topock Compressor Station, Needles, California*. April 5.

_____. 2014. *Basis of Design Report/Pre-Final (90%) Design Submittal for the Final Groundwater Remedy, PG&E Topock Compressor Station, Needles, California*. In preparation for submittal on September 8.

Ela, Wendell P., and A. E. Saez. *Innovative Technologies for Arsenic Residuals Stabilization*. Publication. AWWA Research Foundation, 2006. Web.

United States Environmental Protection Agency (USEPA). 1996. *ICR Manual for Bench- and Pilot-Scale Treatment Studies.* EPA 814/B-96-003. April.

_____. 2001. National Primary Drinking Water Regulations; Arsenic and Clarifications to Compliance and New Source Contaminants Monitoring; Final Rule Federal Register / Vol. 66, No. 14 / Monday, January 22, 2001 / Rules and Regulations [[Page 6976]] 40 CFR Parts 9, 141 and 142

_____. 2003. *Design Manual: Removal of Arsenic from Drinking Water by Adsorptive Media,* EPA/600/R-03/019. March.

Tables

TABLE 1A
HNWR-1 Analytical Results (November 2010 through January 2013)
Groundwater Remedy Operation and Maintenance Manual
Volume 3: Contingency Plan
PG&E Topock Compressor Station, Needles, California

	Location:	HNWR-01	HNWR-01	HNWR-01	HNWR-01	HNWR-01	HNWR-01
	Sample Date:	11/10/2010	2/23/2012	3/14/2012	4/4/2012	6/27/2012	1/22/2013
Parameter	**Units**						
Field							
Dissolved oxygen	mg/L	**5.33**	**3.52**	**3.29**	**3.72**	**---**	**---**
Oxidation reduction potential	mV	**159**	**172**	**200**	**112**	**33.5**	**---**
pH	pH units	**7.84**	**7.68**	**7.61**	**8.07**	**7.51**	**---**
Salinity	%	**0.42**	**0.0662**	**0.0537**	**0.0509**	**0.439**	**---**
Specific conductance	µS/cm	**870**	**1,024**	**830**	**787**	**6,791**	**---**
Temperature	°C	**35.9**	**38.3**	**38.1**	**38.0**	**37.9**	**---**
Turbidity	NTU	**5.10**	**5.10**	**2.50**	**---**	**8.00**	**---**
Anions							
Bromide	mg/L	**---**	**---**	**---**	**---**	**---**	**---**
Chloride	mg/L	**---**	**130**	**130**	**130**	**130**	**---**
Fluoride	mg/L	**3.80**	**---**	**---**	**---**	**4.00**	**3.90**
Nitrate (as nitrogen)	mg/L	**2.50**	**2.60**	**2.50**	**2.50**	**2.60**	**---**
Nitrite as Nitrogen	mg/L	**---**	**---**	**---**	**---**	**---**	**---**
Sulfate	mg/L	**47.0**	**45.0**	**44.0**	**45.0**	**44.0**	**---**
General Chemistry							
Alkalinity, bicarb as CaCO3	mg/L	**---**	**110**	**110**	**110**	**100**	**---**
Alkalinity, carb as CaCO3	mg/L	**---**	ND (5.0)	ND (5.0)	ND (5.0)	ND (5.0)	**---**
Alkalinity, hydroxide	mg/L	**---**	ND (5.0)	ND (5.0)	ND (5.0)	ND (5.0)	**---**
Alkalinity, total as CaCO3	mg/L	**100**	**110**	**110**	**110**	**100**	**---**
Ammonia as nitrogen	mg/L	ND (0.1)	**0.13**	**0.12**	**0.15**	ND (0.1)	**---**
Cyanide	mg/L	**---**	**---**	ND (0.01)	ND (0.01)	ND (0.01)	**---**
Deuterium	0/00	**-75.3**	**-73.8**	**---**	**---**	**-77.1**	**---**
Oxygen 18	0/00	**-10.3**	**-10.2**	**---**	**---**	**-10.2**	**---**
pH	pH units	**---**	**---**	**---**	**---**	**---**	**---**
Soluble silica	mg/L	**28.6**	**---**	**---**	**---**	**25.9**	**---**
Specific conductance	µS/cm	**740**	**---**	**---**	**---**	**---**	**---**
Total dissolved solids	mg/L	**490 J**	**480**	**510**	**430**	**440**	**---**
Total Kjeldahl Nitrogen	mg/L	ND (0.4)	**---**	**---**	**---**	**---**	**---**
Total organic carbon	mg/L	ND (1.0)	ND (1.0)	ND (1.0)	ND (1.0)	ND (1.0)	**---**
Total suspended solids	mg/L	**---**	**---**	ND (10)	**---**	ND (10)	**---**
Herbicides							
2,4,5-T	µg/L	**---**	**---**	ND (2.7)	ND (0.26)	**---**	**---**
2,4,5-TP (Silvex)	µg/L	**---**	**---**	ND (2.7)	ND (0.26)	**---**	**---**
2,4-D	µg/L	**---**	**---**	ND (2.7)	ND (0.26)	**---**	**---**
2,4-DB	µg/L	**---**	**---**	ND (2.7)	ND (0.26)	**---**	**---**
4-Nitrophenol	µg/L	**---**	**---**	ND (2.7)	**---**	**---**	**---**

TABLE 1A
HNWR-1 Analytical Results (November 2010 through January 2013)
Groundwater Remedy Operation and Maintenance Manual
Volume 3: Contingency Plan
PG&E Topock Compressor Station, Needles, California

Location:		HNWR-01	HNWR-01	HNWR-01	HNWR-01	HNWR-01	HNWR-01
Sample Date:		**11/10/2010**	**2/23/2012**	**3/14/2012**	**4/4/2012**	**6/27/2012**	**1/22/2013**
Parameter	**Units**						
Herbicides							
Dalapon	µg/L	---	---	ND (4.4)	ND (0.42)	---	---
Dicamba	µg/L	---	---	ND (2.7)	ND (0.26)	---	---
Dichlorprop	µg/L	---	---	ND (2.7)	ND (0.26)	---	---
Dinoseb	µg/L	---	---	ND (2.7)	ND (0.26)	---	---
MCPA	µg/L	---	---	ND (2.7)	ND (0.26)	---	---
MCPP	µg/L	---	---	ND (2.7)	ND (0.26)	---	---
Pentachlorophenol	µg/L	---	---	ND (2.7)	ND (0.26)	---	---
Metals							
Aluminum, dissolved	µg/L	ND (50)	---	ND (50)	ND (50)	ND (50)	---
Antimony, dissolved	µg/L	ND (10)	ND (10)	ND (10)	ND (0.5)	ND (0.5)	---
Arsenic	µg/L	---	---	---	---	---	**16.0**
Arsenic, dissolved	µg/L	**15.0**	**15.0**	**16.0**	**15.0**	**16.0**	**16.0**
Barium, dissolved	µg/L	**130**	**110**	**110**	**110**	**110**	---
Beryllium, dissolved	µg/L	ND (1.0)	ND (1.0)	ND (1.0)	ND (1.0)	ND (1.0)	---
Boron, dissolved	µg/L	**380**	---	---	---	---	---
Cadmium, dissolved	µg/L	ND (3.0)	ND (3.0)	ND (3.0)	ND (3.0)	ND (3.0)	---
Calcium, dissolved	µg/L	**23,000**	**19,000 J**	**19,000**	**20,000**	---	---
Chromium, Hexavalent	µg/L	**17.5**	**15.0**	**18.0**	**14.0**	**15.0**	---
Chromium, total dissolved	µg/L	**19.2**	**16.0**	**18.0**	**17.0**	**18.0**	---
Cobalt, dissolved	µg/L	ND (3.0)	ND (3.0)	ND (3.0)	ND (3.0)	ND (3.0)	---
Copper, dissolved	µg/L	ND (5.0)	ND (5.0)	ND (5.0)	ND (5.0)	ND (5.0)	---
Iron, dissolved	µg/L	ND (20)	**37.0**	ND (20)	**25.0**	**38.0**	---
Lead, dissolved	µg/L	ND (10)	ND (10)	ND (10)	ND (10)	ND (10)	---
Magnesium, dissolved	µg/L	**4,000**	**3,100**	**3,200 J**	**3,100 J**	---	---
Manganese, dissolved	µg/L	ND (10)	**1.90**	**0.64**	**1.70**	**1.70**	---
Mercury, dissolved	µg/L	ND (0.2)	ND (0.2)	ND (0.2)	ND (0.2)	ND (0.2)	---
Molybdenum, dissolved	µg/L	**11.0**	**9.40**	**10.0**	**9.00**	**9.10**	---
Nickel, dissolved	µg/L	ND (5.0)	ND (5.0)	ND (5.0)	ND (5.0)	ND (5.0)	---
Potassium, dissolved	µg/L	**5,100**	**4,400**	**4,000**	**3,700**	---	---
Selenium, dissolved	µg/L	**0.73**	**0.87**	**0.75**	**0.75**	**0.71**	---
Silver, dissolved	µg/L	ND (3.0)	ND (3.0)	ND (3.0)	ND (3.0)	ND (3.0) J	---
Sodium, dissolved	µg/L	**130,000**	**130,000**	**130,000**	**130,000**	---	---
Soluble silica	mg/L	---	---	---	---	---	---
Thallium, dissolved	µg/L	ND (0.5)	ND (0.5)	ND (0.5)	ND (0.5)	ND (0.5)	---
Vanadium, dissolved	µg/L	**20.0**	**21.0**	**22.0 J**	**20.0**	**20.0**	---
Zinc, dissolved	µg/L	ND (10)	ND (10)	**16.0**	ND (10)	ND (10)	---

TABLE 1A
HNWR-1 Analytical Results (November 2010 through January 2013)
Groundwater Remedy Operation and Maintenance Manual
Volume 3: Contingency Plan
PG&E Topock Compressor Station, Needles, California

Location:		HNWR-01	HNWR-01	HNWR-01	HNWR-01	HNWR-01	HNWR-01
Sample Date:		**11/10/2010**	**2/23/2012**	**3/14/2012**	**4/4/2012**	**6/27/2012**	**1/22/2013**
Parameter	**Units**						
Perchlorate							
Perchlorate	µg/L	---	---	ND (2.0)	ND (2.0)	---	---
Pesticides							
4,4-DDD	µg/L	---	---	ND (0.053)	ND (0.052)	---	---
4,4-DDE	µg/L	---	---	ND (0.053)	ND (0.052)	---	---
4,4-DDT	µg/L	---	---	ND (0.053)	ND (0.052)	---	---
Aldrin	µg/L	---	---	ND (0.027)	ND (0.026)	---	---
alpha-BHC	µg/L	---	---	ND (0.027)	ND (0.026)	---	---
alpha-Chlordane	µg/L	---	---	ND (0.027)	ND (0.026)	---	---
beta-BHC	µg/L	---	---	ND (0.027)	ND (0.026)	---	---
delta-BHC	µg/L	---	---	ND (0.027)	ND (0.026)	---	---
Dieldrin	µg/L	---	---	ND (0.053)	ND (0.052)	---	---
Endo sulfan I	µg/L	---	---	ND (0.027)	ND (0.026)	---	---
Endo sulfan II	µg/L	---	---	ND (0.053)	ND (0.052)	---	---
Endosulfan sulfate	µg/L	---	---	ND (0.053)	ND (0.052)	---	---
Endrin	µg/L	---	---	ND (0.053)	ND (0.052)	---	---
Endrin aldehyde	µg/L	---	---	ND (0.053)	ND (0.052)	---	---
gamma-BHC	µg/L	---	---	ND (0.027)	ND (0.026)	---	---
gamma-Chlordane	µg/L	---	---	ND (0.027)	ND (0.026)	---	---
Heptachlor	µg/L	---	---	ND (0.027)	ND (0.026)	---	---
Heptachlor Epoxide	µg/L	---	---	ND (0.027)	ND (0.026)	---	---
Methoxy chlor	µg/L	---	---	ND (0.27)	ND (0.26)	---	---
Toxaphene	µg/L	---	---	ND (2.7) J	ND (2.6) J	---	---
Polyaromatic Hydrocarbons							
1-Methyl naphthalene	µg/L	---	---	ND (0.22)	ND (0.2)	---	---
2-Methyl naphthalene	µg/L	---	---	ND (0.22)	ND (0.2)	---	---
Acenaphthene	µg/L	---	---	ND (0.22)	ND (0.2)	---	---
Acenaphthylene	µg/L	---	---	ND (0.22)	ND (0.2)	---	---
Anthracene	µg/L	---	---	ND (0.22)	ND (0.2)	---	---
B(a)P Equivalent	µg/L	---	---	ND (0.19)	ND (0.18)	---	---
Benzo (a) anthracene	µg/L	---	---	ND (0.22)	ND (0.2)	---	---
Benzo (a) pyrene	µg/L	---	---	ND (0.22)	ND (0.2)	---	---
Benzo (b) fluoranthene	µg/L	---	---	ND (0.22)	ND (0.2)	---	---
Benzo (ghi) perylene	µg/L	---	---	ND (0.22)	ND (0.2)	---	---
Benzo (k) fluoranthene	µg/L	---	---	ND (0.22)	ND (0.2)	---	---
Chrysene	µg/L	---	---	ND (0.22)	ND (0.2)	---	---
Dibenzo (a,h) anthracene	µg/L	---	---	ND (0.22)	ND (0.2)	---	---

TABLE 1A
HNWR-1 Analytical Results (November 2010 through January 2013)
Groundwater Remedy Operation and Maintenance Manual
Volume 3: Contingency Plan
PG&E Topock Compressor Station, Needles, California

Location:		HNWR-01	HNWR-01	HNWR-01	HNWR-01	HNWR-01	HNWR-01
Sample Date:		**11/10/2010**	**2/23/2012**	**3/14/2012**	**4/4/2012**	**6/27/2012**	**1/22/2013**
Parameter	**Units**						
Polyaromatic Hydrocarbons							
Fluoranthene	µg/L	---	---	ND (0.22)	ND (0.2)	---	---
Fluorene	µg/L	---	---	ND (0.22)	ND (0.2)	---	---
Indeno (1,2,3-cd) pyrene	µg/L	---	---	ND (0.22)	ND (0.2)	---	---
Naphthalene	µg/L	---	---	ND (0.22)	ND (0.2)	---	---
PAH High molecular weight	µg/L	---	---	ND (0.0)	ND (0.0)	---	---
PAH Low molecular weight	µg/L	---	---	ND (0.0)	ND (0.0)	---	---
Phenanthrene	µg/L	---	---	ND (0.22)	ND (0.2)	---	---
Pyrene	µg/L	---	---	ND (0.22)	ND (0.2)	---	---
Polychlorinated Biphenyls							
Aroclor 1016	µg/L	---	---	ND (0.53)	ND (0.52)	---	---
Aroclor 1221	µg/L	---	---	ND (1.1)	ND (1.0)	---	---
Aroclor 1232	µg/L	---	---	ND (0.53)	ND (0.52)	---	---
Aroclor 1242	µg/L	---	---	ND (0.53)	ND (0.52)	---	---
Aroclor 1248	µg/L	---	---	ND (0.53)	ND (0.52)	---	---
Aroclor 1254	µg/L	---	---	ND (0.53)	ND (0.52)	---	---
Aroclor 1260	µg/L	---	---	ND (0.53)	ND (0.52)	---	---
Radiochemistry							
Gross Alpha	pCi/L	---	---	---	---	---	---
Gross Beta	pCi/L	---	---	---	---	---	---
Total Petroleum Hydrocarbons							
Orthophosphate, dissolved	mg/L	---	---	---	---	---	---
TPH as diesel	µg/L	---	---	**190**	ND (51) J	---	---
TPH as gasoline	µg/L	---	---	ND (100)	ND (100)	---	---
TPH as motor oil	µg/L	---	---	ND (53)	ND (51)	---	---
Volatile Organic Compounds							
1,1,1,2-Tetrachloroethane	µg/L	---	---	ND (1.0)	ND (1.0)	---	---
1,1,1-Trichloroethane	µg/L	---	---	ND (1.0)	ND (1.0)	---	---
1,1,2,2-Tetrachloroethane	µg/L	---	---	ND (1.0)	ND (1.0)	---	---
1,1,2-Trichloroethane	µg/L	---	---	ND (1.0)	ND (1.0)	---	---
1,1,2-Trichlorotrifluoroethane (Freon 113)	µg/L	---	---	ND (1.0)	ND (1.0)	---	---
1,1-Dichloroethane	µg/L	---	---	ND (1.0)	ND (1.0)	---	---
1,1-Dichloroethene	µg/L	---	---	ND (1.0)	ND (1.0)	---	---
1,1-Dichloropropene	µg/L	---	---	ND (1.0)	ND (1.0)	---	---
1,2,3-Trichlorobenzene	µg/L	---	---	ND (1.0)	ND (1.0)	---	---
1,2,3-Trichloropropane	µg/L	---	---	ND (1.0)	ND (1.0)	---	---
1,2,4-Trichlorobenzene	µg/L	---	---	ND (1.0)	ND (1.0)	---	---

TABLE 1A
HNWR-1 Analytical Results (November 2010 through January 2013)
Groundwater Remedy Operation and Maintenance Manual
Volume 3: Contingency Plan
PG&E Topock Compressor Station, Needles, California

Location:		HNWR-01	HNWR-01	HNWR-01	HNWR-01	HNWR-01	HNWR-01
Sample Date:		**11/10/2010**	**2/23/2012**	**3/14/2012**	**4/4/2012**	**6/27/2012**	**1/22/2013**
Parameter	**Units**						
Volatile Organic Compounds							
1,2,4-Trimethylbenzene	µg/L	---	---	ND (1.0)	ND (1.0) J	---	---
1,2-Dibromo-3-chloropropane	µg/L	---	---	ND (2.0)	ND (2.0)	---	---
1,2-Dibromoethane	µg/L	---	---	ND (1.0)	ND (1.0)	---	---
1,2-Dichlorobenzene	µg/L	---	---	ND (1.0)	ND (1.0)	---	---
1,2-Dichloroethane	µg/L	---	---	ND (1.0)	ND (1.0)	---	---
1,2-Dichloropropane	µg/L	---	---	ND (1.0)	ND (1.0)	---	---
1,3,5-Trimethylbenzene	µg/L	---	---	ND (1.0)	ND (1.0) J	---	---
1,3-Dichlorobenzene	µg/L	---	---	ND (1.0)	ND (1.0)	---	---
1,3-Dichloropropane	µg/L	---	---	ND (1.0)	ND (1.0)	---	---
1,4-Dichlorobenzene	µg/L	---	---	ND (1.0)	ND (1.0)	---	---
2,2-Dichloropropane	µg/L	---	---	ND (1.0)	ND (1.0)	---	---
2-Chlorotoluene	µg/L	---	---	ND (1.0)	ND (1.0)	---	---
4-Isopropyltoluene	µg/L	---	---	ND (1.0)	ND (1.0)	---	---
Acetone	µg/L	---	---	ND (10)	ND (10)	---	---
Acrolein	µg/L	---	---	ND (20)	ND (20)	---	---
Acrylonitrile	µg/L	---	---	ND (20)	ND (20)	---	---
Benzene	µg/L	---	---	ND (1.0)	ND (1.0)	---	---
Bromobenzene	µg/L	---	---	ND (1.0)	ND (1.0)	---	---
Bromochloromethane	µg/L	---	---	ND (1.0)	ND (1.0)	---	---
Bromodichloromethane	µg/L	---	---	ND (1.0)	ND (1.0)	---	---
Bromoform	µg/L	---	---	ND (1.0)	ND (1.0)	---	---
Bromomethane	µg/L	---	---	ND (1.0)	ND (1.0)	---	---
Carbon disulfide	µg/L	---	---	ND (1.0)	ND (1.0)	---	---
Carbon tetrachloride	µg/L	---	---	ND (1.0)	ND (1.0)	---	---
Chloro methane	µg/L	---	---	ND (1.0)	ND (1.0)	---	---
Chlorobenzene	µg/L	---	---	ND (1.0)	ND (1.0)	---	---
Chloroethane	µg/L	---	---	ND (1.0)	ND (1.0)	---	---
Chloroform	µg/L	---	---	ND (1.0)	ND (1.0)	---	---
cis-1,2-Dichloroethene	µg/L	---	---	ND (1.0)	ND (1.0)	---	---
cis-1,3-Dichloropropene	µg/L	---	---	ND (1.0)	ND (1.0)	---	---
Dibromochloromethane	µg/L	---	---	ND (1.0)	ND (1.0)	---	---
Dibromomethane	µg/L	---	---	ND (1.0)	ND (1.0)	---	---
Dichlorodifluoromethane	µg/L	---	---	ND (1.0)	ND (1.0)	---	---
Ethyl- benzene	µg/L	---	---	ND (1.0)	ND (1.0)	---	---
Hexachlorobutadiene	µg/L	---	---	ND (1.0)	ND (1.0)	---	---
Isopropylbenzene	µg/L	---	---	ND (1.0)	ND (1.0)	---	---
Methyl ethyl ketone	µg/L	---	---	ND (10)	ND (10)	---	---

TABLE 1A
HNWR-1 Analytical Results (November 2010 through January 2013)
Groundwater Remedy Operation and Maintenance Manual
Volume 3: Contingency Plan
PG&E Topock Compressor Station, Needles, California

Location:		HNWR-01	HNWR-01	HNWR-01	HNWR-01	HNWR-01	HNWR-01
Sample Date:		**11/10/2010**	**2/23/2012**	**3/14/2012**	**4/4/2012**	**6/27/2012**	**1/22/2013**
Parameter	**Units**						
Volatile Organic Compounds							
Methyl isobutyl ketone	µg/L	---	---	ND (10)	ND (10)	---	---
Methyl tert-butyl ether (MTBE)	µg/L	---	---	ND (1.0)	ND (1.0) J	---	---
Methylene chloride	µg/L	---	---	ND (5.0)	ND (5.0)	---	---
N-Butylbenzene	µg/L	---	---	ND (1.0)	ND (1.0)	---	---
N-Propylbenzene	µg/L	---	---	ND (1.0)	ND (1.0)	---	---
p-Chlorotoluene	µg/L	---	---	ND (1.0)	ND (1.0)	---	---
sec-Butylbenzene	µg/L	---	---	ND (1.0)	ND (1.0)	---	---
Styrene	µg/L	---	---	ND (1.0)	ND (1.0) J	---	---
tert-Butylbenzene	µg/L	---	---	ND (1.0)	ND (1.0)	---	---
Tetrachloroethene	µg/L	---	---	ND (1.0)	ND (1.0)	---	---
Toluene	µg/L	---	---	ND (2.5)	ND (2.5)	---	---
trans-1,2-Dichloroethene	µg/L	---	---	ND (1.0)	ND (1.0)	---	---
trans-1,3-Dichloropropene	µg/L	---	---	ND (1.0)	ND (1.0)	---	---
Trichloroethene	µg/L	---	---	ND (1.0)	ND (1.0)	---	---
Trichlorofluoromethane (Freon 11)	µg/L	---	---	ND (1.0)	ND (1.0)	---	---
Vinyl chloride	µg/L	---	---	ND (1.0)	ND (1.0)	---	---
Xylene, m,p-	µg/L	---	---	ND (1.0)	ND (1.0)	---	---
Xylene, o-	µg/L	---	---	ND (1.0)	ND (1.0)	---	---
Xylenes, total	µg/L	---	---	ND (2.0)	ND (2.0)	---	---

Notes:

---	not collected or not available.
%	percent
0/00	differences from global standards in ppt.
°C	degrees Celcius.
J	analyte was present, but reported value was estimated.
mg/L	milligrams per liter.
mV	millivolts.
ND	parameter not detected at the listed reporting limit.
NTU	nephelometric turbidity units.
µg/L	micrograms per liter.
µS/cm	microSiemens per centimeter.

TABLE 1B
HNWR-1 Analytical Results (October 2013 through February 2014)
Groundwater Remedy Operation and Maintenance Manual
Volume 3: Contingency Plan
PG&E Topock Compressor Station, Needles, California

Location:	HNWR-01	HNWR-01	HNWR-01	HNWR-01	HNWR-01	HNWR-01	HNWR-01
Sample Date:	10/22/2013	2/11/2014	2/12/2014	2/12/2014	2/12/2014	2/13/2014	2/14/2014
Time (hours):	--	1	6	12	24	48	72
Parameter	**Units**						
Anions							
Bromide	mg/L	ND (0.5)	ND (0.5)	---	---	---	---	ND (0.5)
Chloride	mg/L	**140**	**140**	---	---	---	---	140
Fluoride	mg/L	**3.90**	**4.00**	**4.00**	**4.00**	**4.00**	**3.80**	3.90
Nitrate (as nitrogen)	mg/L	**2.50**	**2.60**	**2.70**	**2.70**	**2.70**	**2.50**	2.50
Nitrite as Nitrogen	mg/L	ND (2.5)	ND (1.0)	---	---	---	---	ND (1.0)
Sulfate	mg/L	**45.0**	**45.0**	---	---	---	---	51.0
General Chemistry								
Deuterium	0/00	---	**-73.6**	**-73.4**	**-73.4**	**-73.4**	**-74.3**	-72.5
Oxygen 18	0/00	---	**-10.1**	**-10.4**	**-10.4**	**-10.4**	**-10.5**	-10.4
pH	pH units	---	**7.90 J**	---	---	---	---	7.70 J
Total organic carbon	mg/L	---	ND (1.0)	---	---	---	---	ND (1.0)
Herbicides								
2,4,5-T	µg/L	---	ND (0.012)	---	---	---	---	ND (0.012)
2,4,5-TP (Silvex)	µg/L	---	ND (0.016)	---	---	---	---	ND (0.016)
2,4-D	µg/L	---	ND (0.065)	---	---	---	---	ND (0.065)
2,4-DB	µg/L	---	ND (0.32)	---	---	---	---	ND (0.32)
Dalapon	µg/L	---	ND (2.4) J	---	---	---	---	ND (2.4) J
Dicamba	µg/L	---	ND (0.037)	---	---	---	---	ND (0.037)
Dichlorprop	µg/L	---	ND (0.012)	---	---	---	---	ND (0.012)
Dinoseb	µg/L	---	ND (0.04)	---	---	---	---	ND (0.04)
MCPA	µg/L	---	ND (0.29) J	---	---	---	---	ND (0.29) J
MCPP	µg/L	---	ND (0.3) J	---	---	---	---	ND (0.3) J
Metals								
Antimony, dissolved	µg/L	ND (0.5)	ND (0.5)	ND (0.5)	ND (0.5)	ND (0.5)	ND (0.5)	ND (0.5)
Arsenic, dissolved	µg/L	**14.0**	**16.0**	**16.0**	**16.0**	**16.0**	**15.0**	14.0
Barium, dissolved	µg/L	**110**	**120**	**120**	**120**	**120**	**130**	120
Beryllium, dissolved	µg/L	ND (1.0)	ND (0.5)	ND (0.5)	ND (0.5)	ND (0.5)	ND (0.5)	ND (0.5)
Cadmium, dissolved	µg/L	ND (3.0)	ND (0.5)	ND (0.5)	ND (0.5)	ND (0.5)	ND (0.5)	ND (0.5)
Calcium, dissolved	µg/L	---	**19,000**	---	---	---	---	23,000
Chromium, Hexavalent	µg/L	**20.0**	**20.0**	**20.0**	**20.0**	**20.0**	**19.0**	19.0
Chromium, total dissolved	µg/L	**17.0**	**18.0**	**19.0**	**19.0**	**19.0**	**17.0**	16.0
Cobalt, dissolved	µg/L	ND (3.0)	ND (0.5)	ND (0.5)	ND (0.5)	ND (0.5)	ND (0.5)	ND (0.5)
Copper, dissolved	µg/L	ND (5.0)	ND (1.0)	ND (1.0)	ND (1.0)	ND (1.0)	ND (1.0)	ND (1.0)
Iron, dissolved	µg/L	---	ND (20)	---	---	---	---	ND (20)
Lead, dissolved	µg/L	ND (10)	ND (1.0)	ND (1.0)	ND (1.0)	ND (1.0)	ND (1.0)	ND (1.0)
Magnesium, dissolved	µg/L	---	**3,200**	---	---	---	---	4,200

TABLE 1B
HNWR-1 Analytical Results (October 2013 through February 2014)
Groundwater Remedy Operation and Maintenance Manual
Volume 3: Contingency Plan
PG&E Topock Compressor Station, Needles, California

Location:	HNWR-01	HNWR-01	HNWR-01	HNWR-01	HNWR-01	HNWR-01	HNWR-01
Sample Date:	10/22/2013	2/11/2014	2/12/2014	2/12/2014	2/12/2014	2/13/2014	2/14/2014
Time (hours):	--	1	6	12	24	48	72
Parameter / **Units**							
Metals							
Manganese, dissolved µg/L	---	ND (0.5)	---	---	---	---	ND (0.5)
Mercury, dissolved µg/L	ND (0.2)	ND (0.2)	ND (0.2)	ND (0.2)	ND (0.2)	ND (0.2)	ND (0.2)
Molybdenum, dissolved µg/L	**9.10**	**9.00**	**9.40**	**9.40**	**9.40**	**9.20**	8.90
Nickel, dissolved µg/L	ND (5.0)	ND (1.0)	ND (1.0)	ND (1.0)	ND (1.0)	ND (1.0)	ND (1.0)
Potassium, dissolved µg/L	---	**4,100**	---	---	---	---	4,600
Selenium, dissolved µg/L	**0.68**	**0.79**	**0.77**	**0.77**	**0.77**	**0.76**	0.75
Silver, dissolved µg/L	ND (3.0)	ND (0.5)	ND (0.5)	ND (0.5)	ND (0.5)	ND (0.5)	ND (0.5)
Sodium, dissolved µg/L	---	**130,000**	---	---	---	---	140,000
Soluble silica mg/L	**27.0**	**24.0**	**25.0 J**	**25.0 J**	**25.0 J**	**25.0**	27.0
Thallium, dissolved µg/L	ND (0.5)	ND (0.5)	ND (0.5)	ND (0.5)	ND (0.5)	ND (0.5)	ND (0.5)
Vanadium, dissolved µg/L	**20.0**	**18.0**	**19.0**	**19.0**	**19.0**	**17.0**	16.0
Zinc, dissolved µg/L	**12.0**	ND (10)	ND (10)	ND (10)	ND (10)	ND (10)	ND (10)
Perchlorate							
Perchlorate µg/L	---	ND (2.0)	---	---	---	---	ND (2.0)
Pesticides							
4,4-DDD µg/L	---	ND (0.05)	---	---	---	---	ND (0.052)
4,4-DDE µg/L	---	ND (0.05)	---	---	---	---	ND (0.052)
4,4-DDT µg/L	---	ND (0.05)	---	---	---	---	ND (0.052)
Aldrin µg/L	---	ND (0.025)	---	---	---	---	ND (0.026)
alpha-BHC µg/L	---	ND (0.025)	---	---	---	---	ND (0.026)
alpha-Chlordane µg/L	---	ND (0.025)	---	---	---	---	ND (0.026)
beta-BHC µg/L	---	ND (0.025)	---	---	---	---	ND (0.026)
delta-BHC µg/L	---	ND (0.025)	---	---	---	---	ND (0.026)
Dieldrin µg/L	---	ND (0.05)	---	---	---	---	ND (0.052)
Endo sulfan I µg/L	---	ND (0.025)	---	---	---	---	ND (0.026)
Endo sulfan II µg/L	---	ND (0.05)	---	---	---	---	ND (0.052)
Endosulfan sulfate µg/L	---	ND (0.05)	---	---	---	---	ND (0.052)
Endrin µg/L	---	ND (0.05)	---	---	---	---	ND (0.052)
Endrin aldehyde µg/L	---	ND (0.05)	---	---	---	---	ND (0.052)
gamma-BHC µg/L	---	ND (0.025)	---	---	---	---	ND (0.026)
gamma-Chlordane µg/L	---	ND (0.025)	---	---	---	---	ND (0.026)
Heptachlor µg/L	---	ND (0.025)	---	---	---	---	ND (0.026)
Heptachlor Epoxide µg/L	---	ND (0.025)	---	---	---	---	ND (0.026)
Methoxy chlor µg/L	---	ND (0.25)	---	---	---	---	ND (0.26)
Toxaphene µg/L	---	ND (2.5)	---	---	---	---	ND (2.6)

TABLE 1B
HNWR-1 Analytical Results (October 2013 through February 2014)
Groundwater Remedy Operation and Maintenance Manual
Volume 3: Contingency Plan
PG&E Topock Compressor Station, Needles, California

Location:		HNWR-01	HNWR-01	HNWR-01	HNWR-01	HNWR-01	HNWR-01	HNWR-01
Sample Date:		10/22/2013	2/11/2014	2/12/2014	2/12/2014	2/12/2014	2/13/2014	2/14/2014
Time (hours):		--	1	6	12	24	48	72
Parameter	**Units**							
Polyaromatic Hydrocarbons								
1-Methyl naphthalene	µg/L	---	ND (0.2)	---	---	---	---	ND (0.21)
2-Methyl naphthalene	µg/L	---	ND (0.2)	---	---	---	---	ND (0.21)
Acenaphthene	µg/L	---	ND (0.2)	---	---	---	---	ND (0.21)
Acenaphthylene	µg/L	---	ND (0.2)	---	---	---	---	ND (0.21)
Anthracene	µg/L	---	ND (0.2)	---	---	---	---	ND (0.21)
Benzo (a) anthracene	µg/L	---	ND (0.2)	---	---	---	---	ND (0.21)
Benzo (a) pyrene	µg/L	---	ND (0.2)	---	---	---	---	ND (0.21)
Benzo (b) fluoranthene	µg/L	---	ND (0.2)	---	---	---	---	ND (0.21)
Benzo (ghi) perylene	µg/L	---	ND (0.2)	---	---	---	---	ND (0.21)
Benzo (k) fluoranthene	µg/L	---	ND (0.2)	---	---	---	---	ND (0.21)
Chrysene	µg/L	---	ND (0.2)	---	---	---	---	ND (0.21)
Dibenzo (a,h) anthracene	µg/L	---	ND (0.2)	---	---	---	---	ND (0.21)
Fluoranthene	µg/L	---	ND (0.2)	---	---	---	---	ND (0.21)
Fluorene	µg/L	---	ND (0.2)	---	---	---	---	ND (0.21)
Indeno (1,2,3-cd) pyrene	µg/L	---	ND (0.2)	---	---	---	---	ND (0.21)
Naphthalene	µg/L	---	ND (0.2)	---	---	---	---	ND (0.21)
Phenanthrene	µg/L	---	ND (0.2)	---	---	---	---	ND (0.21)
Pyrene	µg/L	---	ND (0.2)	---	---	---	---	ND (0.21)
Polychlorinated Biphenyls								
Aroclor 1016	µg/L	---	ND (0.5)	---	---	---	---	ND (0.52)
Aroclor 1221	µg/L	---	ND (1.0)	---	---	---	---	ND (1.0)
Aroclor 1232	µg/L	---	ND (0.5)	---	---	---	---	ND (0.52)
Aroclor 1242	µg/L	---	ND (0.5)	---	---	---	---	ND (0.52)
Aroclor 1248	µg/L	---	ND (0.5)	---	---	---	---	ND (0.52)
Aroclor 1254	µg/L	---	ND (0.5)	---	---	---	---	ND (0.52)
Aroclor 1260	µg/L	---	ND (0.5)	---	---	---	---	ND (0.52)
Radiochemistry								
Gross Alpha	pCi/L	---	**7.42**	---	---	---	---	6.34 J
Gross Beta	pCi/L	---	ND (4.0)	---	---	---	---	ND (4.0)
Total Petroleum Hydrocarbons								
Orthophosphate, dissolved	mg/L	---	ND (0.02)	---	---	---	---	ND (0.02)
TPH as diesel	µg/L	---	ND (50)	---	---	---	---	ND (50)
TPH as gasoline	µg/L	---	ND (100)	---	---	---	---	ND (100)
TPH as motor oil	µg/L	---	ND (50)	---	---	---	---	ND (50)

Notes:

---	not collected or not available.
0/00	differences from global standards in ppt.
J	analyte was present, but reported value was estimated.
mg/L	milligrams per liter.
ND	parameter not detected at the listed reporting limit.
NTU	nephelometric turbidity units.
pCi/L	picocurries per liter.
µg/L	micrograms per liter.

TABLE 2

Design Criteria for Arsenic Treatment System

Addendum to Freshwater Pre-injection Treatment System Design Basis Memorandum
PG&E Topock Compressor Station, Needles, California

Subject	Criteria	Comments/Reason
OPERATIONAL CRITERIA		
Maximum Groundwater Injection Flow Capacity	900 gpm	
Minimum Groundwater Injection Flow Capacity	150 gpm	
Average Groundwater Injection Flow Capacity	450 gpm	
SITE CIVIL		
Location	Designated freshwater treatment at PG&E Topock Compressor Station near Needles, California. Next to the Remedy Produced Water Conditioning Building, within the footprint of the planned Decontamination Pad	
Building Finish Floor Elevation	Finished first floor, Elevation 626 feet (NGVD88).	
Grading	Longitudinal Slopes: Minimum 1% away from structures (2% desirable).	
Vehicle Access	WB 50 (turning radius for semi-truck and trailer with 50-foot wheel base). HS 20 (wheel loading on access roadways and parking areas). 50-foot minimum turning radius. Designated site accommodates truck circulation. Roads will be constructed at new facility for maintenance activities.	Required for delivery of chemicals, pumps, motors, and fire vehicles.
Site Constraints	Proposed facility located within the boundary of the compressor station. Access to all critical compressor station facilities must be maintained.	No modifications to the perimeter site fence or entrance gate will be made.
Parking	No parking will be required for new facility.	
Pedestrian Traffic	Limited to paved roadways, sidewalks are not located between existing facilities.	
PROCESS EQUIPMENT, MOTORS, VALVES, AND ANCILLARIES		
Treatment Process	Pre-oxidation, influent pH adjustment, followed by ligand exchange with granular ferric hydroxide for arsenic removal. Periodic backwash of media with treated water and annual media replacement. Treated water will be dechlorinated to limit adverse effects on microorganisms and remedy performance (see Dechlorination System below).	Design criteria listed below is what is expected from planned pre-purchase bid, but not a guarantee of what equipment will be selected.

TABLE 2

Design Criteria for Arsenic Treatment System

Addendum to Freshwater Pre-injection Treatment System Design Basis Memorandum
PG&E Topock Compressor Station, Needles, California

Subject	Criteria	Comments/Reason
Granular Ferric Hydroxide (GFH) Treatment		
Treatment Objective	Arsenic removal	
Number of Vessels	Three when operating a maximum flow: Three online. Two online when operating at nominal flow;	Three vessels were included in the 90% design instead of four following a value engineering evaluation. Three vessels on-line will meet treatment requirements and have a very small effect on performance because the total downtime during backwashing (i.e., vessel is off-line) is 30 minutes per month (<0.1% of time).
Residence Time	5 minutes empty bed contact time	USEPA guidance.
Vessel Height	10.5 feet overall	
Vessel Diameter	8 feet	4 to 8 gpm/ft^2 hydraulic loading.
Materials of Construction	Low-carbon steel with epoxy lining that is NSF 61 listed.	
Media	Granular ferric hydroxide	Siemens, Severn Trent, or equal
Performance Limits		
Effluent Arsenic Concentration	< 10 µg/L	
Wastewater Volume	9,000 – 18,000 gal/year	
Chlorine Feed System		
Chemical Feed System	One calcium hypochlorite tablet feeder system—HDXLPE (with oxidation resistant liner) mix tank, feed pump, tablet hopper, controller and panel with disconnect. Sized for 0.2 to 2 lbs/hour of chlorine. Three days' minimum tablet capacity.	Feed system located in a containment area.
Safety Equipment	One eyewash and shower unit	Located in chemical storage area.
Coatings/Finishes	Chemical resistant coatings in chemical areas	
Controls	Chemical feed pump speed control	
Sulfuric Acid Feed System		
Chemical Feed System	One 1,000-gallon carbon steel with baked phenolic lining. Desiccant drier installed on vent. Sulfuric acid tank with tank pad. One chemical feed skid with two controllable chemical feed pumps (up to 2 gal/hour)	Tank will be located in a containment area. Monthly fill frequency is the design basis. Solution concentration will be 93%.
Safety Equipment	One eyewash and shower unit	Located in chemical storage area.
Coatings/Finishes	Chemical resistant coatings in chemical areas	
Controls	Chemical feed pump speed control	
Backwash Tank and Treated Water Tank		
Material	Fiberglass Reinforced Plastic (FRP)	
Number	Two	

TABLE 2

Design Criteria for Arsenic Treatment System

Addendum to Freshwater Pre-injection Treatment System Design Basis Memorandum
PG&E Topock Compressor Station, Needles, California

Subject	Criteria	Comments/Reason
Capacity	10,000-gallons tanks	Backwash is anticipated to be just over 7,000 gallons per vessel – 10 minutes of backwashing at 15 gpm/ft^2. Backwash tank will have floating decanter and cone bottom to aid in solids recovery and improve backwash recycle rate. Treated water tank will be flat-bottomed. Both tanks will be equipped with ladders and top access platforms with safety cages and railings.
Dechlorination System		Chemical selected for use in dechlorination is calcium thiosulfate.
Chemical Feed System	Drums or chemical tote compatible with calcium thiosulfate. One chemical feed skid with two controllable chemical feed pumps	Container will be located in a containment area. Monthly fill frequency is the design basis, It is assumed there is sufficient space for this equipment.
Safety Equipment	One eyewash and shower unit	Located in chemical storage area.
Coatings/Finishes	Chemical resistant coatings in chemical areas	
Controls	Chemical feed pump speed control Inline static mixer	
Flow Meters		
Type	Magnetic	
Number	Seven	
Flow Control Strategy	FWPTS will receive raw water from the primary source well (HNWR-1A) into a new freshwater storage tank (10,000 gallons). The secondary sources (HNWR-1 and Site B) may be connected to the pipeline in the future. PG&E is considering augmenting the supply with a gravity flow line from the existing TCS storage tanks only when required.) A booster pump with variable frequency drive will vary the flow through the treatment plant to maintain set point water levels in the treated water tank and prevent pump operating when the remedy freshwater storage tank water levels are below the setpoint. Media vessel inlet control valves equalize flows through each vessel based on flowmeters located downstream of each media vessel.	
Pressure Transmitters	Furnished before/after media vessels.	
Static Mixer		
Number	Two (at the inlet and outlet)	
Diameter	10-inch	
Type	Wafer style with integral injection ports	

TABLE 2

Design Criteria for Arsenic Treatment System

Addendum to Freshwater Pre-injection Treatment System Design Basis Memorandum
PG&E Topock Compressor Station, Needles, California

Subject	Criteria	Comments/Reason
Piping Materials		
Process	HDPE SDR 11 or CPVC Schedule 80, per ASTM D1784, ASTM D1785, and NSF/ANSI 14 and NSF 61 listed	
Treatment Media Vessel Manifold	HDPE SDR 11 or CPVC Schedule 80, per ASTM D178, ASTM D1785, NSF/ANSI 14 and NSF-61 listed	
Potable Water	Buried: Copper, Type K, per ASTM B88 Exposed: Copper, Type L, per ASTM B88 or CPVC Sch. 80	
Process Piping Installation	Major process piping headers will be installed in pipe trenches inside the treatment building and buried outside the building. Media vessel piping will be aboveground. Actuated valves will be installed above grade whenever possible.	
Remedy freshwater storage tank Interface	Inlet from Remedy freshwater storage tank	
YARD PIPING		
Design Criteria	Appendix C, Basis of Design Report (CH2M HILL 2014)	
CORROSION CONTROL		
Design Criteria	Appendix C, Basis of Design Report (CH2M HIL, 2014)	
ARCHITECTURAL/STRUCTURAL		
Building Code	Appendix C, Basis of Design Report (CH2M HILL 2014)	
Building Design Concept	Single building adjacent to Remedy Produced Water Conditioning System	
Building Construction Materials	Appendix C, Basis of Design Report (CH2M HILL 2014)	
Loads	Appendix C, Basis of Design Report (CH2M HILL 2014)	
HVAC		
Codes/Standards	Appendix C, Basis of Design Report (CH2M HILL 2014)	
Design Conditions		
Site Elevation	See Section C.2 Civil, Appendix C, Basis of Design Report (CH2M HILL 2014)	
Cooling Load Basis	Building envelope heat gain and internal heat gains from equipment.	
System Type		
Process Building	A free standing electrical and controls equipment panel will be installed. The panel will have dedicated cooling system.	
PLUMBING		
Lavatory/Toilet Room	No facilities provided.	
Potable Water	Emergency shower/eye wash stations.	Per 2010 California Plumbing Code, and ANSI Z358.1.

TABLE 2

Design Criteria for Arsenic Treatment System

Addendum to Freshwater Pre-injection Treatment System Design Basis Memorandum
PG&E Topock Compressor Station, Needles, California

Subject	Criteria	Comments/Reason
Non-potable Water	The non-potable water supply will have a reduced pressure backflow preventer. Non-potable water will be supplied for wash down water. Wash down hose valves, hoses and hose racks will be furnished in the area as required.	Per 2010 California Plumbing Code.
ELECTRICAL		
Electrical Load	The electrical load will consist of process pumps, motor operated valves, filter system, control panel and instrumentation, building HVAC, convenience receptacles and interior and exterior lighting. Power distribution will be sized in accordance with NFPA 70 (National Electric Code) to operate process and facility loads. Short-circuit current interrupting capacity of power distribution equipment will be coordinated with existing power distribution system.	.
Service Voltage	480V, 3-phase, 3-wire power will be supplied from XFMR 099	
Utilization Voltage	Appendix C, Basis of Design Report (CH2M HILL 2014)	
Redundancy Requirements	Power distribution system redundancy will be limited to equipment supporting the operation of back-up process and facility equipment (i.e. motor control combination starters, and breakers,). Power distribution system for FWPTS will incorporate spare breakers and fuses. Supporting quick replacement of failed components. Backup power when needed by portable diesel generator located near Remedy Produced Conditioning Building.	.
Manufacturers of Electrical Equipment, Grounding, Lightning Protection, Illumination, Emergency Lights, Stand-by/Backup Power, Raceways, and Duct Banks	Appendix C, Basis of Design Report (CH2M HILL 2014)	
SECURITY		
Security	None	All security covered through TCS main facility
CONTROL AND TELEMETRY		
Control and Telemetry Design Criteria	The treatment vessels will be a packaged system with the equipment manufacturer providing a fully configured programmable logic controller based system control panel with panel-mounted operator interface terminal. The control panel will be specified with an uninterruptible power supply to provide true online conditioned power sized to operate the connected load for 30 minutes.	

TABLE 2

Design Criteria for Arsenic Treatment System

Addendum to Freshwater Pre-injection Treatment System Design Basis Memorandum
PG&E Topock Compressor Station, Needles, California

Subject	Criteria	Comments/Reason
Communications, Other Networks, Supervisory Control and Data Acquisition, Instrumentation	Appendix C, Basis of Design Report (CH2M HILL 2014)	
Environmental Requirements	Equipment and instrumentation will be suitable for the following conditions: Air-conditioned Spaces: 10°C to 35°C and a relative humidity of 10 to 80 percent. Non-air-conditioned Spaces: 0°C to 50°C and a relative humidity of 10 to 95 percent. Outdoors: 0°C to 60°C and a relative humidity of 5 to 100 percent.	Environmental controls, such as heaters, fans, and air conditioning will be provided to maintain equipment within the operating conditions recommended by the manufacturer.
Standards/References	Appendix C, Basis of Design Report (CH2M HILL 2014)	

TABLE 3
Major Equipment List
Addendum to Freshwater Pre-injection Treatment System Design Basis Memorandum
PG&E Topock Compressor Station, Needles, California

Quantity	Name	Description
3	Treatment Media Vessels	8-feet-diameter low-carbon steel with epoxy lining (4 - 8 gpm/ft^2 hydraulic loading rate)
1	Hypochlorite Feeder	Calcium hypochlorite tablet feeder: HDXLPE (with oxidation-resistant liner) mix tank, feed pump, tablet hopper, controller, and panel with disconnect
1	Sulfuric Acid Tank	1,000-gallon, (93% sulfuric acid), desiccant drier installed on vent. Baked phenolic lining on steel.
1	Acid Feed System	Pre-engineered skid with two chemical metering pumps for 93% sulfuric acid (0.5 to 2 gph)
1	Dechlorination System	Pre-engineered chemical feed skid to pump calcium thiosulfate, storage tote(s) or tanks, and static mixer. Air-conditioned chemical storage shed will be provided to maintain chemical quality.
2	Pre-and post-treatment Wafer-Style Static Mixers	With integral injection ports
2	Booster Pumps	Centrifugal pump with variable frequency drive
2	Filters skids with replaceable elements	Package unit with differential pressure indication and alarm and flow control valves to divert water to the online filter. Cartridge type
2	Backwash Recycle Pumps	Multistage centrifugal pump
2	Backwash Pumps	Centrifugal pump 755 gpm (15 gpm/ft^2 hydraulic loading rate)

TABLE 4

Mass Balance Table

Addendum to Freshwater Pre-injection Treatment System Design Basis Memorandum
PG&E Topock Compressor Station, Needles, California

Stream # (see Figure 4)	1	2	3	4	5	6	7
Waste Stream	Downstream of the Booster Pumps	To the Media Filters	To the Treated Water Tank	To the Injection Wells	Backwash	Recycle	Liquid Phase Separators in Remedy Produced Water Conditioning Building
Maximum Flow (gpm)	900	900	900	900			
Maximum Flow (ac-ft/Year)	1,452	1,452	1,452	1,452			
Arsenic (mg/L)	0.015	0.015	0.001	0.001	0.001		
Arsenic (lbs/yr)	59.1	59.1					
pH	8.0	6.5	6.5	6.5	6.5		
Chlorine (mg/L)	0	1.15	1.15	1.15	1.15		
Calcium Hypochlorite (lb/year)		6,969					
Sulfuric Acid (mg/L)		40					
Acid (gal/year)		10,297					
Dechlorination Agent (mg/L)					74		
Dechlorination Agent (gal/yr)					2,550		
Wastewater Volume (MG/yr)					0.36	0.344	0.018
Wastewater Volume (ac-ft/yr)					1.11	1.055	0.056
Nominal Flow (gpm)	450	450	450	450			
Nominal Flow (ac-ft/Year)	726	726	726	726			
Arsenic (mg/L)	0.015	0.015	0.001	0.001	0.001		
Arsenic (lbs/yr)	29.5	29.5					
pH	8.0	6.5	6.5	6.5	6.5		
Chlorine (mg/L)	0	1.15	1.15	1.15	1.15		
Calcium Hypochlorite (lb/year)		3,485					
Sulfuric Acid (mg/L)		40					
Acid (gal/year)		5,148					
Dechlorination Agent (mg/L)					74		
Dechlorination Agent (gal/yr)					1275		
Wastewater Volume (MG/yr)					0.18	0.172	0.009
Waste Volume (ac-ft/yr)					0.56	0.528	0.028

CH2MHILL

REUSE OF DOCUMENTS

© CH2M HILL 2008. ALL RIGHTS RESERVED.

THIS DOCUMENT, AND THE IDEAS AND DESIGNS INCORPORATED HEREIN, AS AN INSTRUMENT OF PROFESSIONAL SERVICE, IS THE PROPERTY OF CH2M HILL AND IS NOT TO BE USED, IN WHOLE OR IN PART, FOR ANY OTHER PROJECT WITHOUT THE WRITTEN AUTHORIZATION OF CH2M HILL

GROUNDWATER REMEDY PROJECT
PG&E TOPOCK COMPRESSOR STATION
NEEDLES, CA

PROCESS

FRESHWATER PRE-INJECTION TREATMENT SYSTEM – MASS BALANCE

SHEET	
DWG NO.	
DATE	8/21/2014 01:35
REV	1

PRINTED AUGUST 9, 2014 06:39

Figures

FIGURE 1

Arsenic Effluent Concentration versus Bed Volumes

Addendum to Freshwater Pre-injection Treatment System Design Basis Memorandum

PG&E Topock Compressor Station, Needles, California

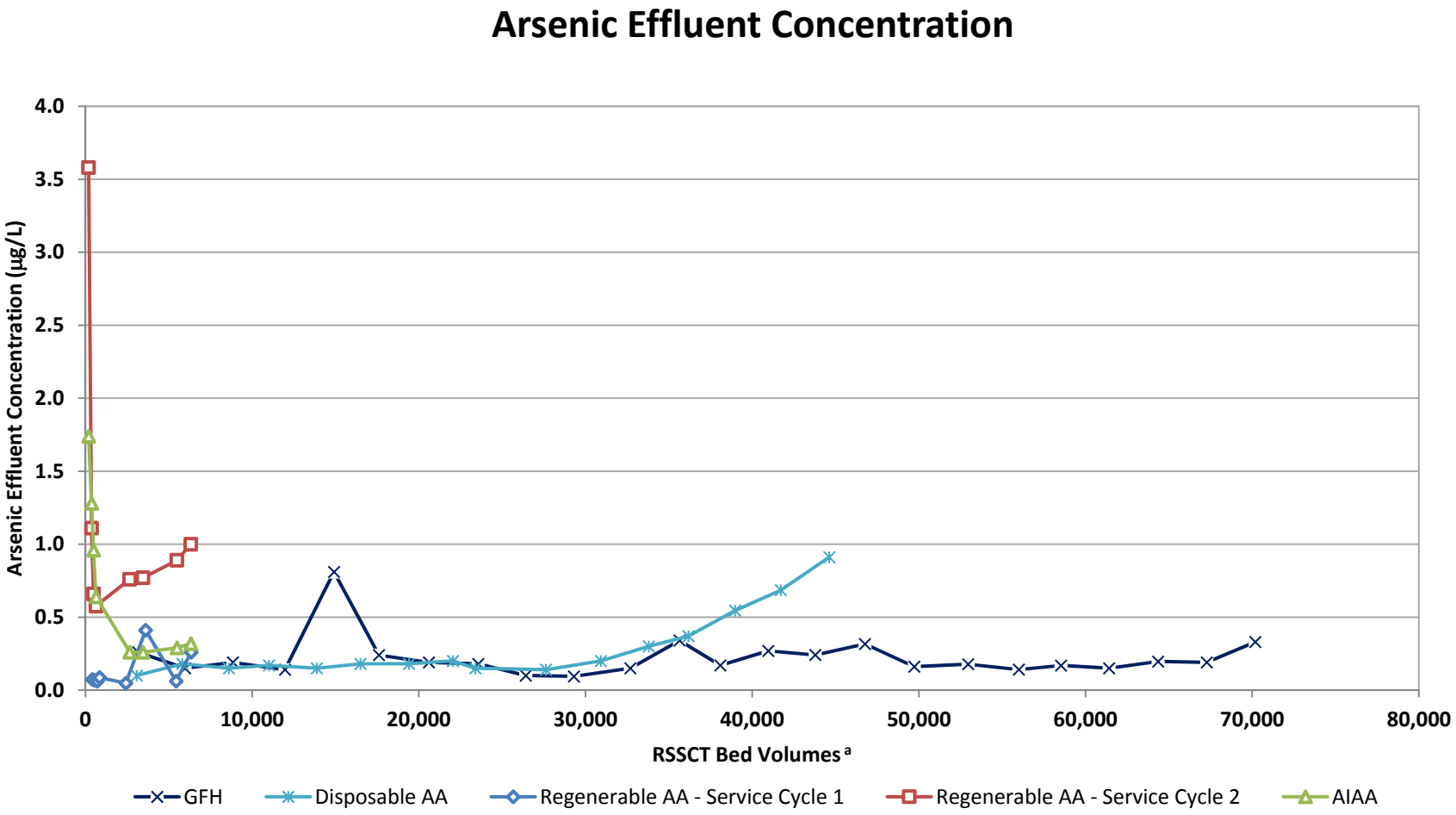

Notes:

a. One bed-volume is equivalent to the amount of adsorptive media in the column. At maximum flow, this equates to about 289 bed volumes per day.

FIGURE 2

Arsenic Effluent and Adsorption Rate

Addendum to Freshwater Pre-injection Treatment System Design Basis Memorandum
PG&E Topock Compressor Station, Needles, California

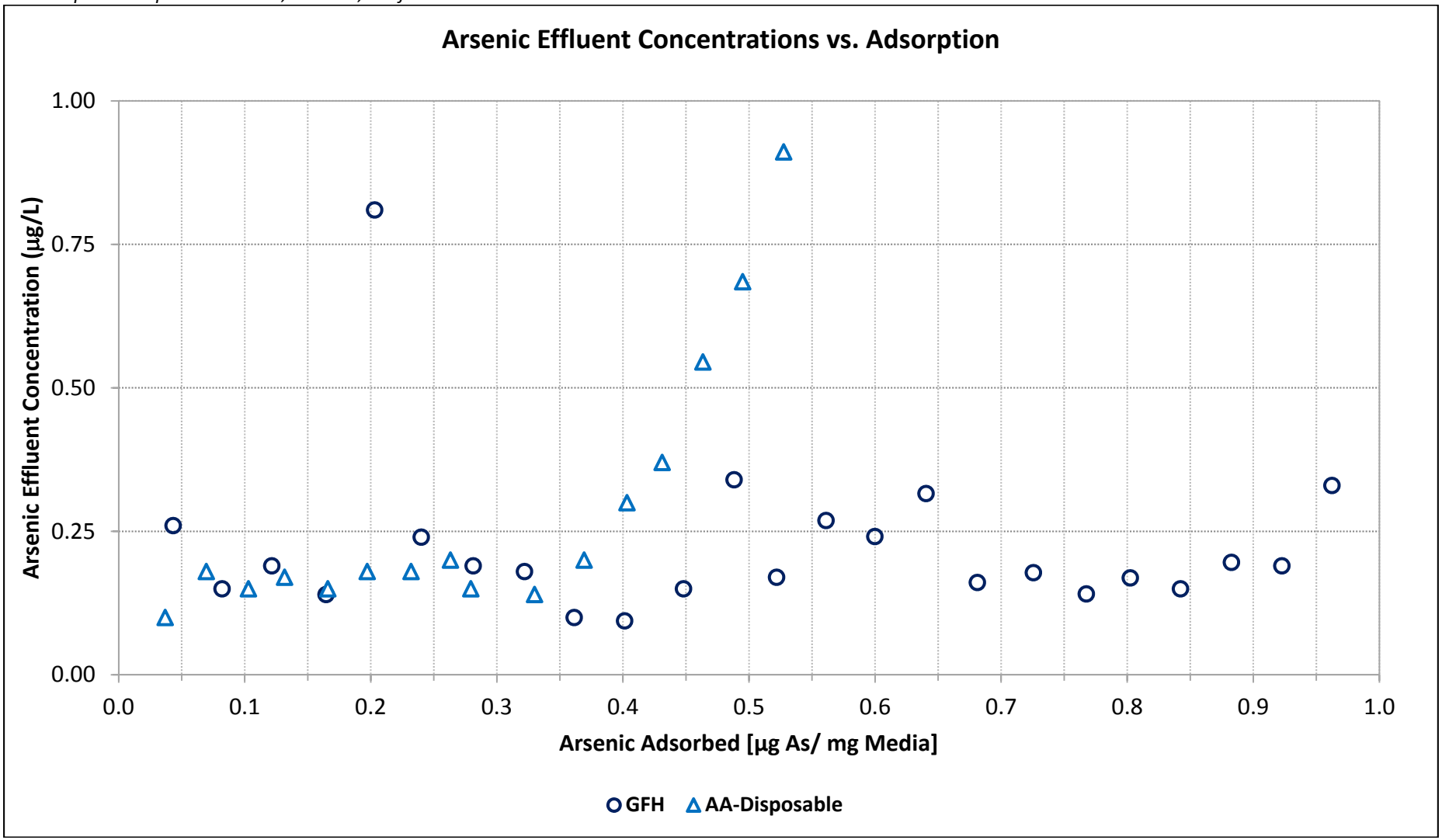

FIGURE 3

Jar Test Results

Addendum to Freshwater Pre-injection Treatment System Design Basis Memorandum
PG&E Topock Compressor Station, Needles, California

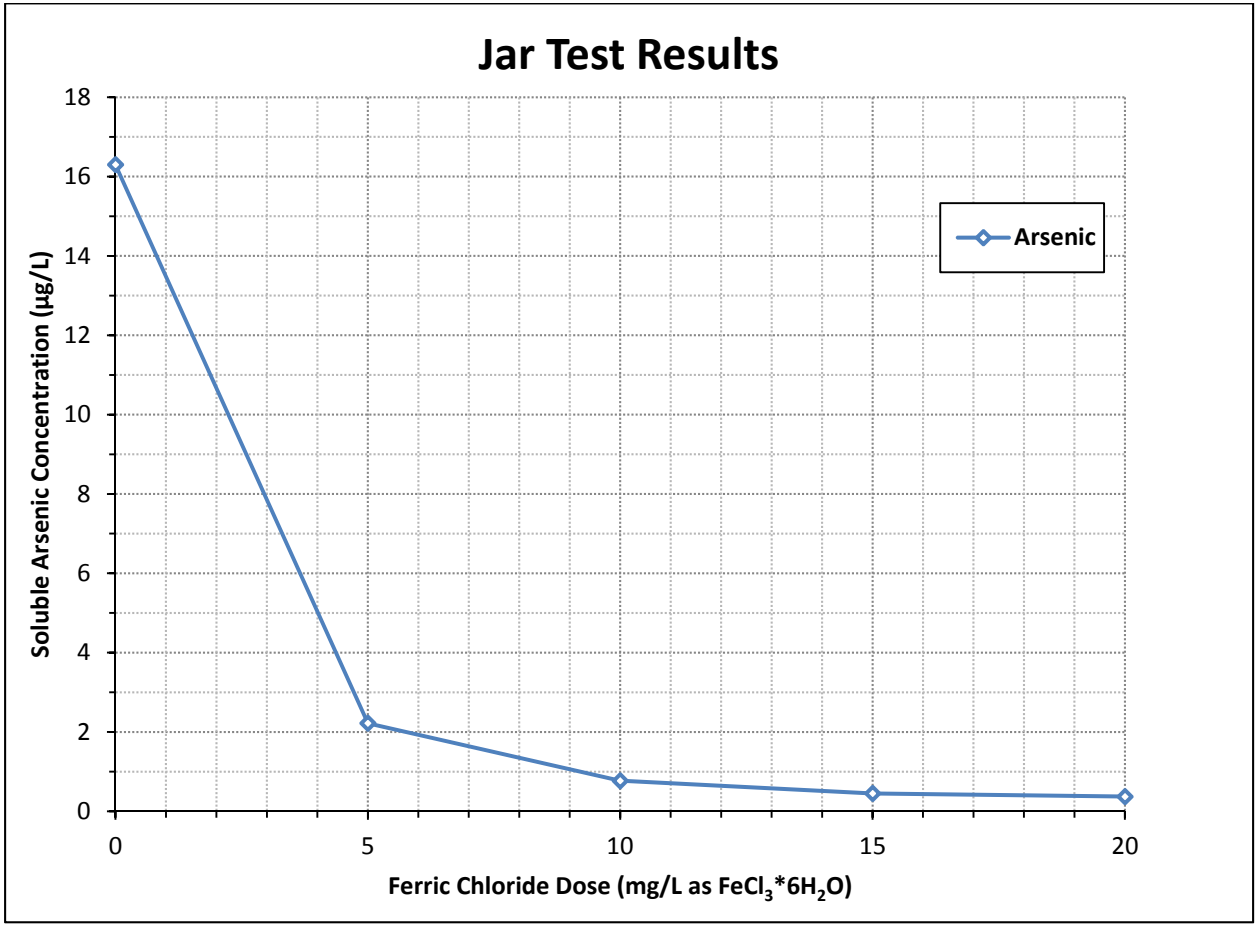

FIGURE 4

Process Flow Diagram

Addendum to Freshwater Pre-injection Treatment System Design Basis Memorandum

PG&E Topock Compressor Station, Needles, California

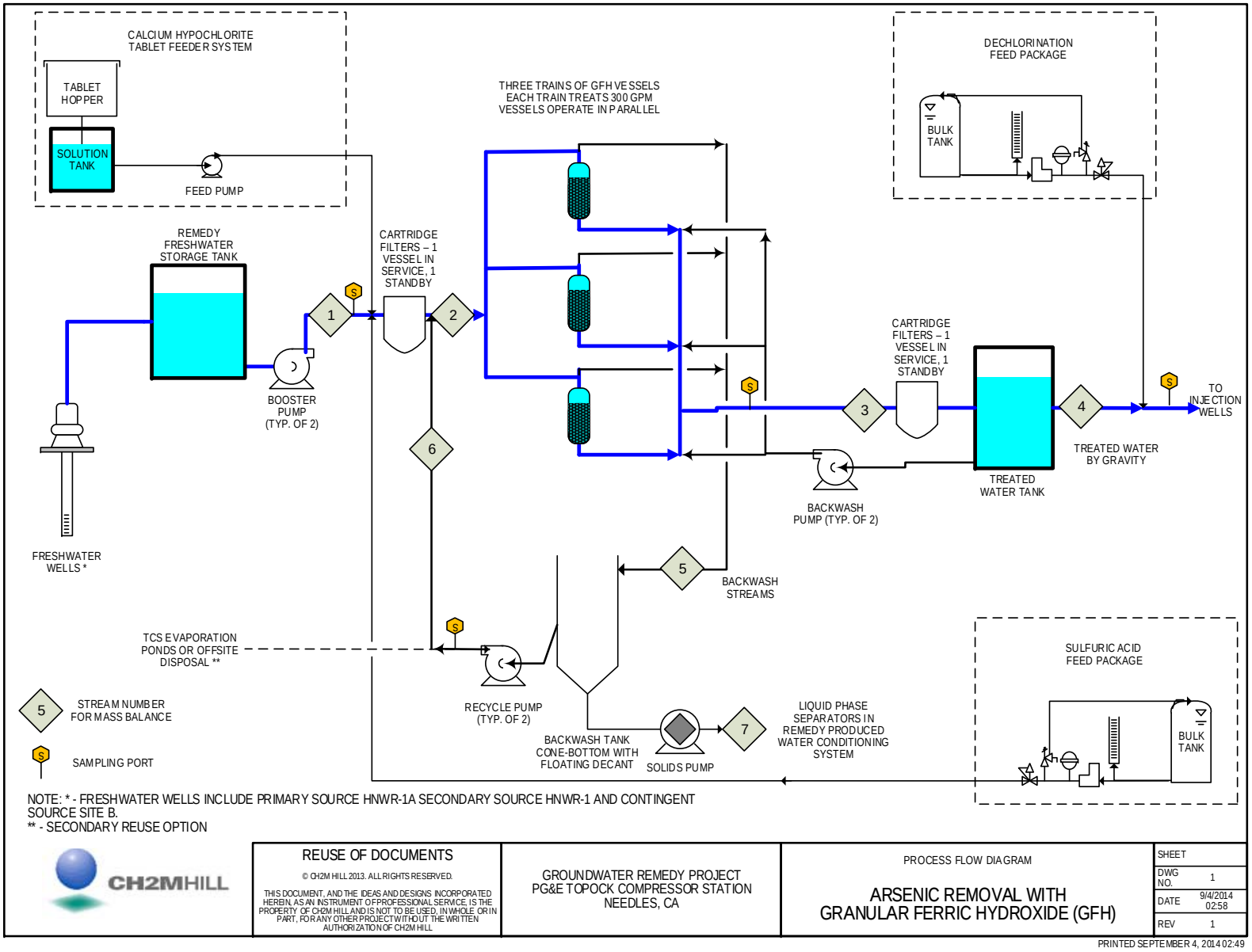

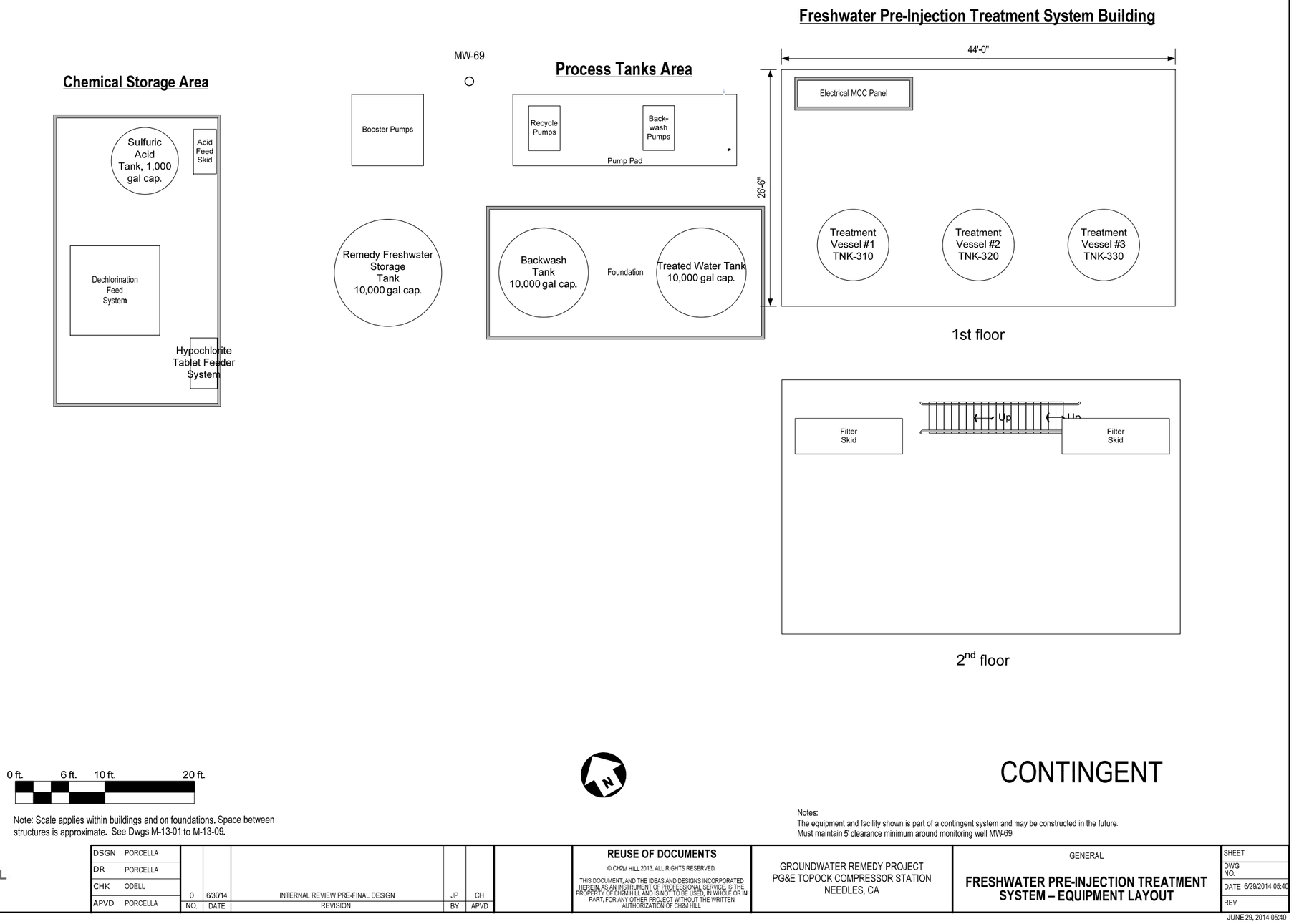

DSGN	PORCELLA						
DR	PORCELLA						
CHK	ODELL						
APVD	PORCELLA	0	6/30/14	INTERNAL REVIEW PRE-FINAL DESIGN	JP	CH	
		NO.	DATE	REVISION	BY	APVD	

REUSE OF DOCUMENTS
© CH2M HILL 2013. ALL RIGHTS RESERVED.
THIS DOCUMENT, AND THE IDEAS AND DESIGNS INCORPORATED HEREIN, AS AN INSTRUMENT OF PROFESSIONAL SERVICE, IS THE PROPERTY OF CH2M HILL AND IS NOT TO BE USED, IN WHOLE OR IN PART, FOR ANY OTHER PROJECT WITHOUT THE WRITTEN AUTHORIZATION OF CH2M HILL

GROUNDWATER REMEDY PROJECT
PG&E TOPOCK COMPRESSOR STATION
NEEDLES, CA

GENERAL

FRESHWATER PRE-INJECTION TREATMENT SYSTEM – EQUIPMENT LAYOUT

SHEET
DWG NO.
DATE 6/29/2014 05:40
REV

JUNE 29, 2014 05:40

FIGURE 5
Equipment Layout
Addendum to Freshwater Pre-injection Treatment System Design Basis Memorandum
PG&E Topock Compressor Station, Needles, California

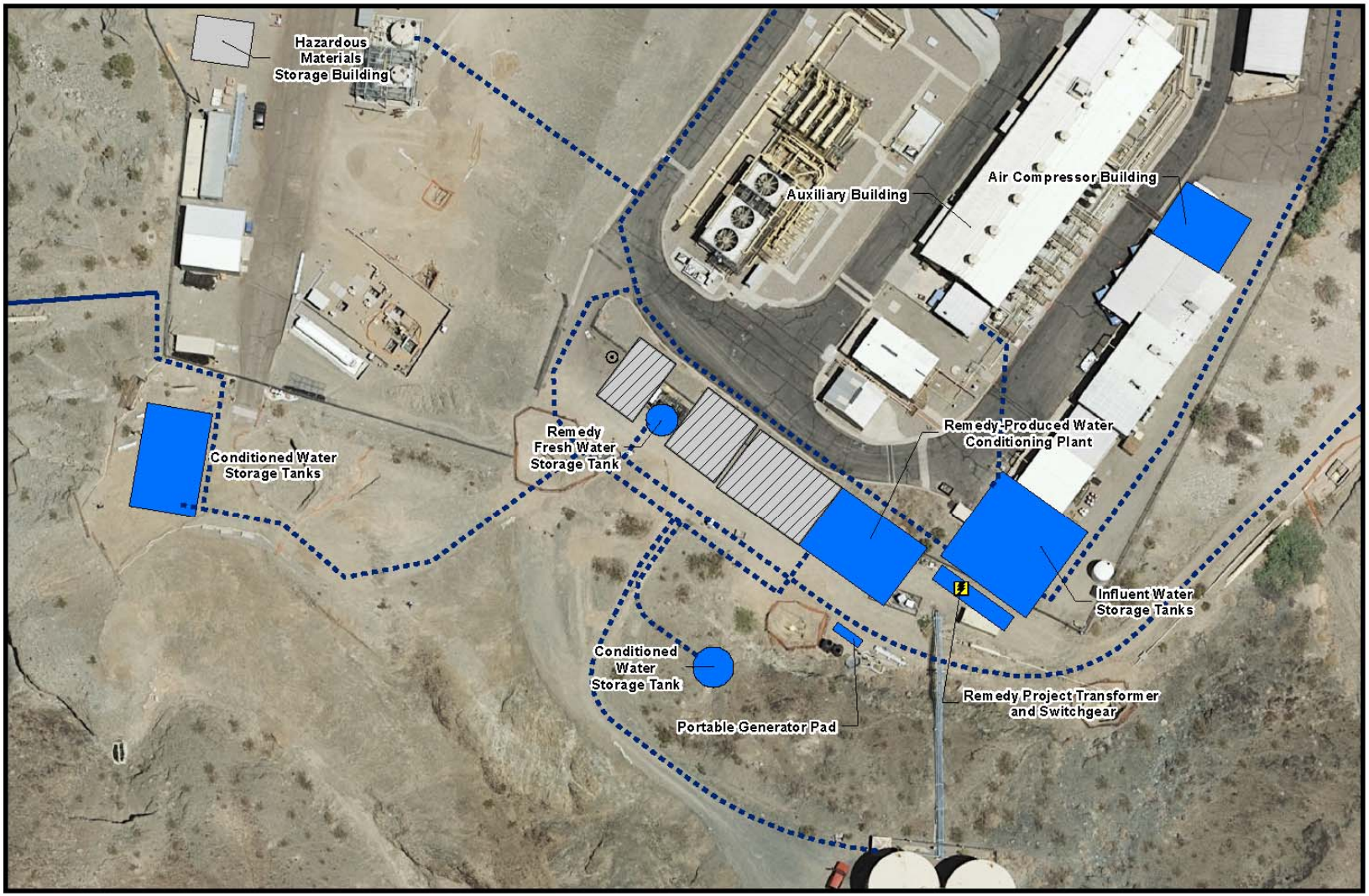

FIGURE 6

Site Layout

Addendum to Freshwater Pre-injection Treatment System Design Basis Memorandum
PG&E Topock Compressor Station, Needles, California

Attachment A
Arsenic and Fluoride Treatment Technology Screening

ATTACHMENT A

Arsenic and Fluoride Treatment Technology Screening

As part of the pre-conceptual design work, several treatment technologies were identified and screened to help select an effective and efficient treatment process for two removal processes -- arsenic/fluoride removal and arsenic only removal. After technology identification, the list was screened qualitatively with a more detailed screening was completed on a short list of five technologies. Bench-scale testing was then performed to select the technology to carry forward into design.

A.1 Initial Screening

The United States Environmental Protection Agency, water and wastewater utilities, industrial concerns, research universities and centers, and industry groups have published numerous case studies and reports on testing and performance of these technologies in treating arsenic and fluoride in water (American Water Works Association, 1999; Odell, 2010). The initial list of technologies evaluated for the Topock freshwater pre-injection treatment system was developed from those technologies that have been successfully used by municipalities and industry. Unproven technologies or technologies that have not been used in full-scale applications were not considered in the screening. The initial list included anion exchange, activated alumina (AA), reverse osmosis (RO), electrodialysis reversal (EDR), lime softening, distillation, iron-based adsorbents, titanium-based adsorbents, and coagulation/filtration. The status of selection is summarized in Table A-1.

TABLE A-1
Technologies Considered for Arsenic and Fluoride Removal
Addendum to Freshwater Pre-injection Treatment System Design Basis Memorandum
PG&E Topock Compressor Station, Needles, California

Technology	Status
Anion exchange	Screened out, significant waste generation.
Activated Alumina (AA)	Selected for bench-testing. Primary treatment option is regenerable AA if arsenic and fluoride treatment required.
Titanium-based adsorbents	Screened out, similar as other adsorbents considered, with less experience.
Reverse Osmosis (RO)	Screened out, significant waste generation.
Electrodialysis Reversal (EDR)	Screened out, significant waste generation.
Lime Softening	Screened out, significant waste generation.
Distillation	Screened out, significant energy use and capital cost.
Coagulation Filtration	Screened out, this process does not treat fluoride. If arsenic-only treatment is required, this technology would be screened out due to more residuals are generated, additional chemicals are used, and the process is more complex than iron-based adsorbents. However, it will be retained for bench-scale testing for data collection due to the quick and simple test.
Iron-based Adsorbents	Screened out, this process does not treat fluoride. If arsenic-only treatment required, this process may be used.

A brief process description is provided below.

Anion Exchange. Anions such as fluoride, nitrate, arsenate, selenate, and chromate can be removed from water by using ion exchange with resin. This physical-chemical process involves an easily displaceable ion on the solid phase, exchanging with an unwanted ion in the water that adsorbs to the solid phase. To accomplish the exchange reaction, a packed bed of ion-exchange resin beads is used. Source water is continually passed through the bed in a downflow or upflow mode until the adsorbent is exhausted, as evidenced by the appearance (breakthrough) of the unwanted contaminant at an unacceptable concentration in the effluent.

The most useful ion-exchange reactions are reversible. In the simplest cases, the exhausted bed is regenerated using an excess of the displaceable ion in the form of salt brine. Ideally, no permanent media structural change occurs during the exhaustion/regeneration cycle. This is a proven technology, is widely used, and is easy to automate, but it generates considerable wastewater.

Activated Alumina*.* AA is a semi-crystalline porous inorganic adsorbent, is a proven technology for fluoride removal, and effectively removes arsenic. The removal mechanism, which is one of exchange of contaminant anions for surface hydroxides on the alumina, is generally called adsorption, although ligand exchange is a more appropriate term for the highly specific surface reactions involved. Packed beds of AA are used in water treatment plants in a similar manner to anion exchange. Regeneration is accomplished using a basic solution like sodium hydroxide (caustic). The adsorbent media can be purchased in a disposable form as well. In this case, the spent media is disposed in an offsite facility. This is a proven technology, is widely used, is easy to automate, but it generates considerable wastewater.

Titanium-based adsorbents*.* These are porous adsorbents made with titanium that work similarly to AA in that surface hydroxides exchange with fluoride in the water stream. Similarly, caustic is used to regenerate the adsorbent in the packed beds. This is a newer process with fewer systems in service.

Reverse Osmosis. RO is a membrane water treatment system in which water is pressurized to more than 100 pounds per square inch and is directed through small pores in a synthetic membrane. Treated water is produced through the other side of the small pores while larger particulates are retained on the inlet side of the membrane. RO is effective in removing uranium, radium, arsenic, fluoride, nitrates, microbial contaminants, and many chemicals. Because of the high pressure required for the process, RO systems typically are energy-intensive and have high initial costs. Furthermore, these systems can require more operator attention and can require membrane integrity testing. RO systems also risk fouling and scaling from hard water, colloids, and bacteria. The fouling and scaling increase the pressure drop and result in a shorter lifetime for the membrane or frequent chemical cleaning. In addition, this process generates considerable volumes of wastewater.

Electrodialysis Reversal. EDR is a membrane water treatment process that relies on polarizing electrodes to remove contaminants. The ions in the water are attracted to the membrane by a cathode or anode. Once attracted to the membrane, the ion is transported electrically through the membrane. EDR systems reverse the polarity of the electrodes every 15 to 20 minutes. This process releases accumulated ions and has the following advantages:

- Breaks up scale and reduces the potential for scaling.
- Reduces microbiological growth on the membrane.
- Reduces membrane cleaning frequency.

EDR systems operate at higher pressures than most water treatment systems but not as high as RO systems. They are maintenance intensive and generate considerable volumes of wastewater.

Lime Softening. Hardness in water is characterized by elevated levels of magnesium and calcium. Lime softening removes the hardness by mixing lime (slaked or hydrated) during the treatment process. The lime addition increases the pH of the water and causes the magnesium and calcium to precipitate out. Flocculation and sedimentation units are employed to provide a sufficient time and space to accumulate solids. Magnesium requires a higher pH than calcium to cause precipitation and results in water with a pH as high as 11. Carbon dioxide is used commonly to reduce the pH back to desired levels. This process, although used often, requires

careful chemical dosing and process monitoring, requires large amounts of chemicals, and generates large amounts of waste sludge.

Distillation. To distill water, water is heated until boiling and vaporized. The resulting steam is collected and condensed in a clean storage tank. Distillation is effective in removing metals, hardness, and particulates because they do not vaporize with the water. The boiling process also kills bacteria and some viruses. Distillation is ineffective in removing contaminants with a lower boiling point than water, such as benzene. These contaminants must be removed before condensation or recontamination will occur. This process is straightforward to operate but uses high amounts of energy and requires costly metal alloys for construction.

Coagulation Filtration. Coagulation is a process in which smaller particles in suspension attach to one another through electrostatic forces. As the particles attach to one another, larger particles start to form. Aluminum and ferric salts are the most commonly used compounds to enhance coagulation because aluminum or iron hydroxide is formed. Once finished with the coagulation process, the water is filtered through a media filter or microfilter to remove the aggregated particles. Coagulation filtration has been found very effective in removing arsenic from water. While often some form of pretreatment is needed (usually chlorine oxidation), coagulation filtration systems can achieve over a 90 percent reduction in arsenic. However, this process does not treat fluoride. The process is relatively easy to operate.

Iron-based Adsorbents. Contaminated water is passed through a pressure vessel that contains iron based adsorbents that remove arsenic. Granular ferric hydroxide is a common example that is in an amorphous crystalline form. Iron-based adsorbents have been shown effective in removing arsenic (not fluoride) at pH levels normally found in drinking water; however, best performance happens at lower pH levels. Lower pH levels may result in the need for more operator attention and the possibility of handling hazardous chemicals. Once the media has been lost its adsorbent capacity, the spent media is replaced.

A.1.1 Initial Screening Results

As a result of the screening, four technologies were retained for further evaluation:

- AA adsorption – disposal media and regenerable media
- Iron-based adsorbents
- Coagulation/filtration

The following technologies were rejected based on the reasons listed below.

- **Anion exchange, EDR, and RO:** processes generate large residual wastewater streams that must be disposed of.
- **Lime softening:** generates large volume of waste sludge that is difficult and costly to dispose of.
- **Titanium-based adsorbents:** effective at very low pH or with expensive rare earth metals and has the fewest number of operating systems.
- **Distillation:** high cost for energy use.

A.2 Second-level Screening

The two remaining technologies were screened at a second level with AA divided into regenerable and disposable forms. The screening criteria were as follows:

1. Treatment Effectiveness
   - Ability to achieve treatment goals
2. Reliability and Flexibility
   - Ability to allow variation in influent water
   - Expandability

3. Operational Complexity
   - Ease of operation
   - Safety
4. Waste Generation
   - Quantity and quality
5. Footprint
6. Cost Effectiveness

As a result of the screening, anion exchange was not carried forward and was dropped from further consideration because of its lower effectiveness, greater operational complexity, the wastewater volumes generated, and its higher operating cost. The four processes— regenerable AA and disposable AA, iron-based adsorbents, and coagulation/filtration —were advanced to bench-scale testing.

A.3 Bench-scale Testing

As described in the body of the Design Basis Technical Memorandum, bench-scale testing was performed after the technology screening. Testing showed that regenerable AA and iron-based adsorbent were the technologies that best met design needs if both arsenic and fluoride removal, or arsenic removal alone is required Disposable AA was eliminated from further evaluation.

A.4 References

American Water Works Association. 1999. *Water Quality and Treatment - A Handbook of Community Water Supplies*, 5th Edition. Ed. by R.D. Letterman.

Odell, Lee H. 2010. *Treatment Technologies for Groundwater*. American Water Works Association.

Operation and Maintenance Manual

Volume 4

Soil Management Plan

Final (100%) Design Submittal for the Final Groundwater Remedy

PG&E Topock Compressor Station Needles, California

Prepared for

Pacific Gas & Electric Company

November 2015

CH2MHILL®
155 Grand Avenue
Suite 800
Oakland, CA 94612

Contents

Section **Page**

Acronyms and Abbreviations ..... **iii**

1.0 Introduction **1-1**
1.1 Soil Management Plan Purpose and Objectives 1-2
1.2 Site Description, Soil Investigation History, and Findings 1-3
1.2.1 Soil Investigation History and Findings Outside the Compressor Station Fence Line 1-5
1.2.2 Soil Investigation History and Findings Inside the Compressor Station Fence Line 1-6
1.3 Report Organization 1-6

2.0 Soil Management **2-1**
2.1 Soil RFI/RI Investigation Areas Intersected by the Groundwater Remedy Project 2-1
2.2 Soil and Waste Characterization Process 2-2
2.3 Screening and Classification of Soil 2-3
2.4 Handling and Storage of Clean Soil 2-4
2.5 Handling and Off-site Disposal of Non-Hazardous Soil 2-5

3.0 Soil Storage **3-1**
3.1 Methods to Store Soil 3-1
3.1.1 Drums/Small Containers 3-1
3.1.2 Stockpiles 3-2
3.1.3 Roll-off Bins 3-3
3.2 Hazardous Waste Soil Storage Time Limit 3-3
3.3 Labeling 3-4
3.3.1 Hazardous Waste Soil 3-4
3.3.2 Clean Soil/Non-Hazardous Soil 3-4
3.4 Inspections 3-5
3.5 Security/Emergency Response 3-5

4.0 Waste Training, Profiling, Transportation, and Disposal **4-1**
4.1 Employee Training for Waste Soil Management 4-1
4.2 Hazardous Waste Profiling 4-1
4.3 Manifests/Shipping Documentation 4-1
4.4 Department of Transportation (DOT) Requirements 4-2
4.4.1 Shipping Name 4-2
4.4.2 Packaging, Marking, and Labeling 4-2
4.4.3 Placards 4-2
4.5 California and Arizona Transportation Requirements 4-2
4.6 Transporter Requirements 4-2
4.7 Spill Reporting 4-3
4.8 Spill Response 4-3
4.9 Waste Disposal 4-3

5.0 Recordkeeping **5-1**

6.0 Soil Management Plan Updates **6-1**

7.0 References **7-1**

Exhibit

1.2-1 Soil RCRA Facility Investigation/Remedial Investigation Solid Waste Management Units, Areas of Concern, and Undesignated Areas 1-4

Tables

1.2-1 Historical Activities Summary, Constituents Exceeding Interim Screening Levels for Soil RFI/RI Units Outside the Fence Line, Perimeter Area, and Storm Drains, and Associated Analytical Suites 1-9

1.2-2 Historical Area Summary and Constituents Exceeding Background Threshold Value for Soil RFI/RI Units Inside the Fence Line and Associated Analytical Suites 1-15

2.4-1 Reference List of Potentially Applicable Analytes and Associated Screening Levels 2-7

2.4-2 Hazardous Waste Toxicity Characteristic Levels 2-13

Figures

1.0-1 Groundwater Remedy Features, Solid Waste Management Units, and Areas of Concern 1-21

2.4-1 Clean Soil Storage Area 2-17

Appendices

A Groundwater Remedy Implementation—Baseline Soil Sampling and Analysis Plan

B Revised Management Protocol for Handling and Disposition of Displaced Site Material

C Construction and Operations Best Management Practices (BMPs) Plan for Soil Storage

D Technical Memorandum 3: Ecological Comparison Values for Metals and Polycyclic Aromatic Hydrocarbons in Soil

Acronyms and Abbreviations

AOC	Area of Concern
APE	Area of Potential Effects
ARAR	applicable or relevant and appropriate requirement
bgs	below ground surface
BLM	U.S. Bureau of Land Management
BMP	Best Management Practice
BOR	U.S. Bureau of Reclamation
CCR	California Code of Regulations
CD	Consent Decree
CERCLA	Comprehensive Environmental Response, Compensation, and Liability Act
CEQA	California Environmental Quality Act
CFR	Code of Federal Regulations
DQO	Data Quality Objective
DOI	U.S. Department of the Interior
DOT	U.S. Department of Transportation
DTSC	California Department of Toxic Substances Control
EIR	environmental impact report
FMIT	Fort Mojave Indian Tribe
HAZWOPER	Hazardous Waste Operations and Emergency Response
HERO	California Department of Toxic Substances Control's Human and Ecological Risk Office
HSP	Health and Safety Plan
IM-3	Interim Measure No. 3
LDR	Land Disposal Restriction
mg/kg	milligrams per kilogram
O&M	operation and maintenance
OSHA	Occupational Health and Safety Administration
PAH	polycyclic aromatic hydrocarbon
PG&E	Pacific Gas and Electric Company
RCRA	Resource Conservation and Recovery Act
RFI	RCRA Facility Investigation
RD/RA	Remedial Design/Remedial Action
RI	Remedial Investigation
SAP	Sampling and Analysis Plan

SMP	Soil Management Plan
STLC	soluble threshold limit concentration
SWMU	Solid Waste Management Unit
TC	toxicity characteristic
TCLP	toxicity characteristic leaching procedure
TTLC	total threshold limit concentration
UA	Undesignated Area
USEPA	United States Environmental Protection Agency
WET	Waste Extraction Test

SECTION 1

Introduction

Pacific Gas and Electric Company (PG&E) is implementing the selected groundwater remedy to address chromium contamination in groundwater at the Topock Compressor Station (Compressor Station) in San Bernardino County, Needles, California. In addition, after receipt of approval from the California Department of Toxic Substances Control (DTSC), with the U.S. Department of the Interior's (DOI's) concurrence, PG&E will decommission and remove the Interim Measure No. 3 (IM-3) Groundwater Extraction and Treatment System (referred to herein as the "IM-3 system"). The IM-3 Treatment Plant and MW-20 Bench Facility (a portion of which is part of the IM-3 system) areas have been identified as investigation areas (Areas of Concern [AOCs] 29 and AOC 30, respectively) in the concurrent Soil RCRA Facility Investigation/Remedial Investigation (RFI/RI) program.

The mitigation measure HAZ-2c set forth in the certified environmental impact report (EIR) (DTSC 2011) adopted by the DTSC for the groundwater remediation project requires that contaminated soil identified during ground disturbance activities be managed and disposed of in accordance with a project-specific Soil Management Plan (SMP) and Health and Safety Plan (HSP). If activities involve stockpiling of excavated hazardous soil, this would trigger the need for compliance with the California action-specific applicable or relevant and appropriate requirement (ARAR) #86: Waste piles for RCRA hazardous waste (22 CCR, Div 4.5, Ch. 14, Article 12) (DOI 2010), which is addressed in this SMP.

At the final design stage of the groundwater remediation project, proposed remedy infrastructure (excluding future provisional wells) is within 20 feet of or overlaps with twenty-four Soil Investigation Areas that are undergoing investigations as part of the Soil RFI/RI (see Figure 1.0-1 located at the end of this section). As shown in Figure 1.0-1, the overlap between the groundwater remediation project and ongoing soil investigations (or areas within 20 feet of these investigation areas) occurs in the following areas:

- Soil Investigation Areas inside the Compressor Station:
  - SWMU 5 – Sludge Drying Beds
  - SWMU 6 – Chromium Reduction Tank
  - SWMU 9 – Transfer Sump
  - AOC 7 – Hazardous Materials Storage Area
  - AOC 8 – Paint Locker
  - AOC 13 – Unpaved Areas within the Compressor Station
  - AOC 17 – Onsite Septic System
  - AOC 18 – Combined Hazardous Waste Transference Pipelines
  - AOC 21 – Round Area by Sludge Drying Beds
  - AOC 22 – Unidentified Three-sided Structure
  - AOC 33 – Potential Former Burn Area near AOC 17
  - Unit 4.3 – Oil/Water Holding Tank
- Soil Investigation Areas outside Compressor Station:
  - SWMU 1 – Former Percolation Bed
  - AOC 1 – Area Around Former Percolation Bed
  - AOC 4 - Debris Ravine
  - AOC 9 – Southeast Fence Line (Outside Visitor Parking Area)
  - AOC 10 – East Ravine
  - AOC 11 – Topographic Low Areas
  - AOC 12 – Fill Areas
  - AOC 27 – MW-24 Bench
  - AOC 28 – Pipeline Drip Legs
  - AOC 30 – MW 20 Bench

- Perimeter Area outside of but adjacent to the Compressor Station fence line
- Storm Drain System

In compliance with the aforementioned EIR mitigation measure and action-specific ARAR, this SMP includes procedures and protocols for the management and disposal of potentially contaminated and contaminated soil displaced during drilling, construction, operation and maintenance (O&M) of the groundwater remedy, and the decommissioning and removal of the IM-3 system. Potentially contaminated and contaminated soil is expected to be limited to within and near the boundaries of the Soil RFI/RI Investigation Areas. This SMP is Volume 4 of the O&M Manual, which is Appendix L of the Basis of Design Report for the final design. The HSP for O&M activities is Volume 5 of the O&M Manual. The HSP for groundwater remedy construction activities was submitted as part of the Construction/Remedial Action Work Plan (CH2M HILL 2015). Details of the decommissioning and removal of the IM-3 system are submitted as part of the IM-3 Decommissioning, Removal, and Restoration Work Plan. Soil and material originating in or near Soil RFI/RI Investigation Areas (areas of known or suspected soil contamination) that is displaced as part of the groundwater remediation project will be handled and managed in accordance with this SMP and the HSPs for construction and O&M activities. Displaced soil and material originating outside areas of known or suspected contamination will be pre-characterized prior to remedy construction to identify areas potentially impacted by nearby current and former roadways (polycyclic aromatic hydrocarbons [PAHs] and lead). Displaced soil from areas outside of known or suspected contamination areas that is impacted with PAHs and lead will be handled and managed in accordance with this SMP and the HSPs for construction and O&M activities. Uncontaminated soil will be reused as backfill into the same trench or excavation area, if practicable. Uncontaminated soil that cannot be immediately used as backfill may be reused in other areas within the Area of Potential Effects (APE), or stockpiled for future reuse within the APE. The stockpiled uncontaminated soil will be managed following the Construction and Operations Best Management Practices (BMPs) Plan for Soil Storage that is summarized in Section 3.1.2 of this SMP, the Construction/Remedial Action Work Plan (CH2M HILL 2015), and the Groundwater Remedy O&M Storm Water Pollution Prevention Plan (also called the Industrial SWPPP) (Appendix E of Volume 1 of the O&M Manual).

In addition, handling and management of displaced soil and material from Soil RFI/RI Investigation Areas, and soil displaced as part of the decommissioning and removal of the IM-3 system will be performed in accordance with this SMP and the IM-3 Decommissioning, Removal, and Restoration Work Plan. Soil generated from Soil RFI/RI work activities will follow the protocols for handling of soil specified in the Revised Final Soil RFI/RI Work Plan (CH2M HILL 2013).

1.1 Soil Management Plan Purpose and Objectives

The purpose and objectives of this SMP are as follows:

1. Ensure that soil is handled in a manner that complies with ARARs and the EIR mitigation measures.
2. Ensure that displaced soil from in and near Soil RFI/RI Investigation Areas that are generated during drilling, construction, decommissioning, removal, and O&M activities is handled in a manner that is protective of human health (including construction workers) and the environment within the framework of appropriate federal, state, and local requirements, and consistent with United States Environmental Protection Agency (USEPA) guidance.
3. Maximize onsite reuse of soil that was displaced during drilling, construction, decommissioning, removal, and O&M activities, following guidelines and protocols of the *Revised Management Protocol for Handling and Disposition of Displaced Site Material, Topock Remediation Project, Needles, California* (PG&E 2015) presented in Appendix B.
4. Minimize offsite transportation and disposal of soil that was displaced during drilling, construction, decommissioning, removal, and O&M.
5. Collect data to help guide future decision-making regarding the disposition of displaced soil and material.

1.2 Site Description, Soil Investigation History, and Findings

The Compressor Station is located adjacent to the Colorado River in eastern San Bernardino County, California, approximately 12 miles southeast of Needles, California, south of Interstate 40 (I-40), in the north end of the Chemehuevi Mountains. The APE for the Topock site is contained within what the Fort Mojave Indian Tribe (FMIT) and other Native American Tribes have identified as a larger area of traditional and cultural importance. The Tribes believe that the environmental, cultural, and spiritual resources may not be physically perceptible. DTSC has concluded within the January 2011 certified EIR that the 779.2-acre project site "appears to qualify as a historic resource under CEQA [California Environmental Quality Act] as an area that is significant in the social and cultural annals of California," and the U.S. Bureau of Land Management (BLM) also has determined that a traditional cultural property or property of traditional religious and cultural significance that is eligible for listing on the National Register of Historic Places exists in the area of the Topock project within the current APE, consisting of 1,600 acres of surface area and a section of the Colorado River (DTSC 2011).

In recognition of this, all remedial activities at the Compressor Station are planned in such a way as to minimize impact to this area. Specifically, impacts to cultural resources will be minimized by implementing the mitigation measures required by the EIR. In addition, mitigation measures will be implemented in accordance with the Programmatic Agreement (PA), the Cultural and Historic Properties Management Plan (CHPMP), and the Cultural Impact Mitigation Program (CIMP), and in consultation with the Tribes. The work will be conducted in a manner that recognizes and respects these resources and the spiritual values of the area.

Since 1996, there have been multiple phases of investigation at the Topock site to collect data to evaluate the nature and extent of contamination at the Solid Waste Management Units (SWMUs), AOCs, and Undesignated Areas (UAs). Results from the RFI/RI at the site are being documented in three volumes:

- **RFI/RI Volume 1**. The *Revised Final RCRA Facility Investigation and Remedial Investigation Report, Volume 1 – Site Background and History* (CH2M HILL 2007a) was completed in August 2007 and was approved by DTSC and DOI. Volume 1 of the RFI/RI identifies the 20 SWMUs, AOCs, and other UAs at the Topock Compressor Station to be carried forward in the Final RFI/RI. An Addendum to the RFI/RI Volume 1 (CH2M HILL 2014) was submitted and approved in May 2014. This Addendum summarizes the history and available data for 15 new units identified since the completion of the RFI/RI Volume 1.
- **RFI/RI Volume 2.** The Revised *Final RCRA Facility Investigation/Remedial Investigation, Volume 2— Hydrogeologic Characterization and Results of Groundwater and Surface Water Investigation Report* (CH2M HILL 2009a) was completed in February 2009 and approved by DTSC and DOI. Volume 2 of the RFI/RI contains the hydrogeologic characterization and results of groundwater and surface water investigations to address historical releases to groundwater from wastewater discharged at Bat Cave Wash and injection well PGE-8 at the Topock Compressor Station. The purpose of the Volume 2 RFI/RI is to complete the RFI/RI requirements for groundwater impacts associated with the past discharge of wastewater from Bat Cave Wash (SMWU 1/ AOC 1) and injection well PGE-8 (SWMU 2). An Addendum to the RFI/RI Volume 2 (CH2M HILL 2009b) was submitted in June 2009. This Addendum included select data and information collected between October 2007 and September 2008, after the data cutoff period for RFI/RI Volume 2.
- **RFI/RI Volume 3.** RFI/RI Volume 3 will include final characterization data to complete the RFI/RI requirements for remaining Topock Compressor Station operations, including results of soils investigations and the current East Ravine (AOC 10) and Compressor Station groundwater investigation. Also included in Volume 3 will be new or additional SWMUs and AOCs that have been identified in the Addendum to the RFI/RI Volume 1.

PG&E will continue to document and notify the Agencies of any new units discovered in the future. The SWMUs, AOCs, UAs, and other investigation areas still being characterized in support of the RFI/RI Volume 3 are presented in Exhibit 1.2-1 and shown on Figure 1.0-1.

Two draft work plans were initially prepared to describe collection of additional soil data to complete site characterization activities at the SWMUs, AOCs, and UAs identified in the Revised Final RFI/RI Volume 1 in support of RFI/RI Volume 3 preparation. Investigation areas outside the compressor station fence line were addressed in

the *Draft RCRA Facility Investigation/Remedial Investigation Soil Investigation Work Plan Part A, PG&E Topock Compressor Station, Needles, California* (Draft Soil Part A Work Plan) (CH2M HILL 2006). Investigation areas within the compressor station fence line were addressed in the *Draft RCRA Facility Investigation/Remedial Investigation Soil Investigation Work Plan Part B, PG&E Topock Compressor Station, Needles, California* (Draft Part B Work Plan) (CH2M HILL 2007b).

EXHIBIT 1.2-1
Soil RCRA Facility Investigation/Remedial Investigation Solid Waste Management Units, Areas of Concern, and Undesignated Areas
Groundwater Remedy Operation and Maintenance Manual
Volume 4: Soil Management Plan
PG&E Topock Compressor Station, Needles, California

Soil Investigation Areas		Overlaps or Is within 20 feet of Groundwater Remedy Infrastructure? (Y/N) — List type of infrastructure
Located Outside the Topock Compressor Station Fence Line		
SWMU 1	Former Percolation Bed	Yes - pipes
AOC 1	Area Around Former Percolation Bed	Yes – wells, pipes
AOC 4	Debris Ravine	Yes – pipes
AOC 9	Southeast Fence Line (Outside Visitor Parking Area)	Yes – pipes
AOC 10	East Ravine	Yes – pipes, wells
AOC 11	Topographic Low Areas	Yes – pipes, wells, building
AOC 12	Fill Area	Yes – pipe, wells
AOC 14	Railroad Debris Site	No
AOC 27	MW 24 Bench	Yes – well, pipe
AOC 28	Pipeline Drip legs	Yes – pipes, wells
AOC 29	IM-3 Treatment Plant	No
AOC 30	MW 20 Bench	Yes – pipes, wells, building, tanks
AOC 31	Former Teapot Dome Oil Pit	No
UA 1	Potential Pipe Disposal Area	No
UA 2	Former 300B Pipeline Liquids Tank	No
Located Inside the Topock Compressor Station Fence Line		
SWMU 5	Sludge-Drying Beds	Yes - pipes
SWMU 6	Chromate Reduction Tank	Yes - pipes
SWMU 8	Process Pump Tank	No
SWMU 9	Transfer Sump	Yes - pipes
SWMU 11	Former Sulfuric Acid Tanks	No
AOC 5	Cooling Tower A	No
AOC 6	Cooling Tower B	No
AOC 7	Hazardous Materials Storage Area	Yes – pipes, tanks
AOC 8	Paint Locker	Yes – pipes, tanks
AOC 13	Unpaved Areas within the Compressor Station	Yes – pipes, wells, buildings
AOC 15	Auxiliary Jacket Water Cooling Pumps	No
AOC 16	Sandblast Shelter	No
AOC 17	Onsite Septic System	Yes – pipes
AOC 18	Combined Hazardous Waste Transference Pipelines	Yes – pipes
AOC 19	Former Cooling Liquid Mixing Area and Former Hotwell	No
AOC 20	Industrial Floor Drains	No
AOC 21	Round Depression near Sludge Drying Bed	Yes - pipes

EXHIBIT 1.2-1
Soil RCRA Facility Investigation/Remedial Investigation Solid Waste Management Units, Areas of Concern, and Undesignated Areas
Groundwater Remedy Operation and Maintenance Manual
Volume 4: Soil Management Plan
PG&E Topock Compressor Station, Needles, California

Soil Investigation Areas		Overlaps or Is within 20 feet of Groundwater Remedy Infrastructure? (Y/N) — List type of infrastructure
AOC 22	Unidentified Three-sided Structure	Yes – pipes
AOC 23	Former Water Conditioning Building	No
AOC 24	Stained Area and Former American Petroleum Institute Oil/Water Separator	No
AOC 25	Compressor and Generator Engine Basements	No
AOC 26	Former Scrubber Oil Sump	No
AOC 32	Oil Storage Tanks and Waste Oil Sump	No
AOC 33	Potential Former Burn Area near AOC 17	Yes – pipes
Unit 4.3	Oil/Water Holding Tank	Yes - pipes
Unit 4.4	Oil Water Separator	No
Unit 4.5	Portable Waste Oil Storage Tank	No
Perimeter Area		Yes – pipes, wells
Storm Drain System		Yes – pipes

Subsequent to submitting the two draft work plans, the Part A and Part B work plans were combined into a single work plan: *Draft Soil RFI/RI Work Plan, PG&E Topock Compressor Station, Needles, California* (CH2M HILL 2011a). The Draft Soil RFI/RI Work Plan contains the Part A and B Data Quality Objectives (DQOs) process, data gaps analysis for each SWMU/AOC, and the proposed sampling plan for the next phase of investigation.

A Revised Final Soil RFI/RI Work Plan was prepared to incorporate comments received from Agencies and stakeholders on the Draft Work Plan, and was submitted to Agencies on January 14, 2013 (CH2M HILL 2013) for final review and approval. The Revised Final Soil RFI/RI Work Plan was approved by DTSC and DOI on August 24, 2015.

1.2.1 Soil Investigation History and Findings Outside the Compressor Station Fence Line

Ten investigation areas located outside of the Compressor Station fence line, one new investigation area (AOC 28 – Pipeline Drip Legs), Perimeter Area, and Storm Drains System located outside of the Compressor Station fence line require further investigation in order to satisfy the Part A DQOs. These investigation areas are:

- SWMU 1 – Former Percolation Bed
- AOC 1 – Area Around Former Percolation Bed
- AOC 4 – Debris Ravine
- AOC 9 – Southeast Fence Line (Outside Visitor Parking Area)
- AOC 10 – East Ravine
- AOC 11 – Topographic Low Areas, including the two new areas
- AOC 14 – Railroad Debris Area
- AOC 28 – Pipeline Drip Legs
- AOC 27 – MW-24 Bench Area
- UA-1 – Potential Pipeline Disposal Area
- AOC 31 – Former Teapot Dome Oil Pit
- Perimeter Area
- Storm Drains System

The proposed sampling plan for these units is described in the Revised Final Soil RFI/RI Work Plan (CH2M HILL 2013). Table 1.2-1 (tables are presented at the end of each section) provides a summary of historical activities at the Part A investigation areas, a list of constituents that exceeded interim screening levels, and the proposed analytical suites.

1.2.2 Soil Investigation History and Findings Inside the Compressor Station Fence Line

Twenty-four investigation areas located inside the compressor station fence line require further investigation in order to satisfy the Part B DQOs. These investigation areas are:

- SWMU 5 – Sludge-drying Beds
- SWMU 6 – Chromate Reduction Tank
- SWMU 8 – Process Pump Tank
- SWMU 9 – Transfer Sump
- SWMU 11 – Former Sulfuric Acid Tanks
- AOC 5 – Cooling Tower A
- AOC 6 – Cooling Tower B
- AOC 7– Hazardous Materials Storage Area
- AOC 8 – Paint Locker
- AOC 13 – Unpaved Areas within the Compressor Station
- AOC 15 – Auxiliary Jacket Cooling Water Pumps
- AOC 16 – Sandblast Shelter
- AOC 17 – Onsite Septic System
- AOC 18 – Combined Wastewater Transference Pipelines
- AOC 19 – Former Cooling Liquid Mixing Area and Former Hotwell
- AOC 20 – Industrial Floor Drains
- AOC 21 – Round Depression near Sludge Drying Bed
- AOC 22 – Three-sided Structure
- AOC 23 – Former Water Conditioning Building
- AOC 24 – Stained Area and Former American Petroleum Institute Oil/Water Separator
- AOC 26 – Former Scrubber Sump
- AOC 33 – Potential Former Burn Area Near AOC 17
- Unit 4.3 – Oily Water Holding Tank
- Unit 4.4 – Oil/Water Separator
- Unit 4.5 – Portable Waste Oil Holding Tank

The proposed sampling plan for these units was described in the Revised Final Soil RFI/RI Work Plan (CH2M HILL 2013). Table 1.2-2 provides a summary of historical activities at the Part B investigation areas, a list of constituents that exceeded interim screening levels, and the proposed analytical suites.

1.3 Report Organization

This SMP is organized into the following sections:

- Section 1.0 contains background information, objectives, a summary of the previous investigations conducted at the site, and a list of Soil RFI/RI Investigation Areas within 20 feet of or overlapping groundwater remedy infrastructure.
- Section 2.0 presents details related to soil management activities including identifying areas of potential/ known contamination in the vicinity of the groundwater remedy system and IM-3 system, and the process for soil characterization, soil screening and classification, handling, and storage of soil at the site.
- Section 3.0 describes storage methods, labeling requirements and inspection of soil storage areas.

- Section 4.0 summarizes the employee training required for waste soil management, hazardous waste profiling, transportation, and disposal of the various waste streams.
- Section 5.0 summarizes the records and documents that should be maintained at the site.
- Section 6.0 presents the process for updating the SMP.
- Section 7.0 presents a list of references used in the preparation of this SMP.

TABLE 1.2-1
Historical Activities Summary, Constituents Exceeding Interim Screening Levels for Soil RFI/RI Units Outside the Fence Line, Perimeter Area, and Storm Drains, and Associated Analytical Suites
Groundwater Remedy Operation and Maintenance Manual
Volume 4: Soil Management Plan
PG&E Topock Compressor Station, Needles, California

Units	Summary of Historical Activities	Constituents Exceeding Interim Screening Levels	Analytical Suites[1]	Overlaps or Is within 20 feet of Groundwater Remedy Infrastructure?
SWMU 1	SWMU 1 is located outside the facility fence line in the bed of Bat Cave Wash. During the 1950s, the facility discharged wastewater containing chromium (cooling tower blowdown) wastewater into Bat Cave Wash without any impoundment. From about 1964 to approximately 1971, the facility discharged wastewater containing chromium to a percolation bed and allowed water to percolate into the ground and/or evaporate. The chromium-containing wastewater was combined with a small quantity (approximately 5 percent) of treated water from the oily waste treatment system discharged from the station.	As, Ba, Ca, Total Cr, Cr^{+6}, Co, Cu, Pb, Mn, Mo, Ni, K, Se, V, Zn, Ca, Mg, Mn, K	Title 22 metals, hexavalent chromium, VOCs. SVOCs, PAHs, TPH, pH, pesticides, PCBs[2]	Yes
AOC 1	AOC 1 is located in the area surrounding SWMU 1, outside the fence line within Bat Cave Wash. This area comprises property owned by PG&E, Havasu National Wildlife Refuge, and the Bureau of Reclamation. As discussed for SWMU 1, the facility discharged wastewater containing chromium into the Bat Cave Wash until approximately 1964.	As, Ba, Total Cr, Cr^{+6}, Cu, Pb, Mo, Ni, Zn, Mn, Benzo (a) anthracene; Benzo (a) pyrene; Benzo (b) fluoranthene; PAH High Molecular weight; B(a)P Equivalent; Aroclor 1254; Total PCBs	Title 22 metals, hexavalent chromium, VOCs. SVOCs, PAHs, TPH, pH, pesticides, PCBs[2], dioxins and furans	Yes
AOC 4	AOC 4 is located south of the fence line, and is a narrow, steep ravine that drains into the Bat Cave Wash. This area comprises property owned by PG&E and the Havasu National Wildlife Refuge. Operation of the area is not well known, but trash burning has been identified on site. In 2009, a Removal Action and erosion control were conducted.	An, Ba, Cd, Total Cr, Cr^{+6}, Co, Cu, Pb, Hg, Ni, V, Zn, Benzo (a) anthracene; Benzo (a) pyrene; Benzo (b) fluoranthene; Benzo (k) fluoranthene; Indeno (1,2,3-cd) pyrene; PAH High Molecular weight; B(a)P Equivalent; Aroclor 1254; Aroclor 1260, Total PCBs	Title 22 metals, hexavalent chromium, VOCs, SVOCs, PAHs, TPH, pH, pesticides, PCBs, dioxins and furans	Yes
AOC 9	AOC 9 is located outside the fence line on the east side, south of the visitor parking lot on a steep slope. In 2000, a broken stormwater drainage pipe and stained soil were found in the area. The staining most likely originated from leaks near the Auxiliary Building. The stained soil was excavated, a new stormwater drainage pipe was installed, and the area was backfilled with 1 – 2 feet of clean soil. The exact location of the former storm drain line is uncertain, and the footprint of AOC 9 is sufficiently large to address both potential locations.	Total Cr, Cr^{+6}, Cu, Pb, Hg, Mo, Ni, Tl, Zn, Benzo (a) pyrene; B(a)P Equivalent; 4,4-DDE	Title 22 metals, hexavalent chromium, VOCs, SVOCs, PAHs, TPH, pH, asbestos, pesticides, PCBs	Yes

TABLE 1.2-1
Historical Activities Summary, Constituents Exceeding Interim Screening Levels for Soil RFI/RI Units Outside the Fence Line, Perimeter Area, and Storm Drains, and Associated Analytical Suites
Groundwater Remedy Operation and Maintenance Manual
Volume 4: Soil Management Plan
PG&E Topock Compressor Station, Needles, California

Units	Summary of Historical Activities	Constituents Exceeding Interim Screening Levels	Analytical Suites[1]	Overlaps or Is within 20 feet of Groundwater Remedy Infrastructure?
AOC 10	AOC 10 is the east ravine located on the southeast side, outside of the fence line. This AOC comprises property owned by PG&E and the Havasu National Wildlife Refuge. The ravine is bisected by three constructed berms built between 1916 and the 1950s. AOC 10 receives run-off from the eastern portion of the upper yard of the compressor station, and the station access road.	As, Ba, Total Cr, Cr^{+6}, Co, Cu, Pb, Mo, Ni, Se, V, Zn, Benzo (a) anthracene; Benzo (a) pyrene; Benzo (b) fluoranthene; Benzo (k) fluoranthene; Indeno (1,2,3-cd) pyrene; PAH High Molecular weight; B(a)P Equivalent	Title 22 metals, hexavalent chromium, VOCs, SVOCs, PAHs, TPH, general chemistry parameters, pesticides, PCBs, dioxins and furans (if burn material present)	Yes
AOC 11	AOC 11 consists of the topographic low areas on the northeast side of the Topock Compressor Station. AOC 11 is located on PG&E and Havasu National Wildlife Refuge property. Multiple storm drains may be discharging to this area, or have discharged to this area in the past. AOC 11 also includes the topographic low area north of the plant access road near the Old Route 66 sign. This area receives run-off from the station access road.	As, Ba, Total Cr, Cr^{+6}, Cu, Pb, Mo, Se, Zn, Al, Mn, K, Benzo (a) anthracene; Benzo (a) pyrene; Benzo (b) fluoranthene; Benzo (k) fluoranthene; PAH High Molecular weight; B(a)P Equivalent; Aroclor 1260; Total PCBs; 4,4-DDE; Dieldrin	Title 22 metals, hexavalent chromium, VOCs, SVOCs, PAHs, TPH, pH, PCBs, pesticides	Yes
AOC 12	AOC 12, known as the Fill Area, included three areas located near the Transwestern gas pipeline meter station, east of the compressor station. Portions of AOC 12 are located on PG&E and Havasu National Wildlife Refuge property. These areas were identified as locations that may contain buried construction-related debris, but no debris was found in the identified areas during the Soil Part A Phase investigation.	Co, Cu, Se, Zn, Di-N-butyl phthalate; Benzo (a) pyrene; B(a)P Equivalent	Title 22 metals, hexavalent chromium, VOCs, SVOCs, PAHs, TPH, pH, asbestos, pesticides, PCBs	Yes
AOC 14	AOC 14, the Railroad Debris Site, is located immediately north of I-40. It is bounded by Santa Fe railroad tracks to the north. The area sits approximately 100 feet above the bottom of the Bat Cave Wash. Aerial photos dated from 1947 to 1955 depicted materials and debris scattered in this area, and water softening (lime) sludge is also believed to have been disposed of in this area. An asbestos removal action was completed in 1999, and sampling detected no remaining asbestos. Field observations identified scattered debris and a potential burn layer (visible in the I-40 road cut) in this area.	Total Cr, Cr^{+6}, Cu, Pb, Hg, Mo, Se, Zn, Benzo (a) pyrene; PAH High Molecular weight; B(a)P Equivalent; 4,4-DDE; 4,4-DDT	Title 22 metals, hexavalent chromium, VOCs, SVOCs, PAHs, TPH, pH, asbestos, pesticides, PCBs, dioxins and furans (if burn material present)	No

TABLE 1.2-1
Historical Activities Summary, Constituents Exceeding Interim Screening Levels for Soil RFI/RI Units Outside the Fence Line, Perimeter Area, and Storm Drains, and Associated Analytical Suites
Groundwater Remedy Operation and Maintenance Manual
Volume 4: Soil Management Plan
PG&E Topock Compressor Station, Needles, California

Units	Summary of Historical Activities	Constituents Exceeding Interim Screening Levels	Analytical Suites[1]	Overlaps or Is within 20 feet of Groundwater Remedy Infrastructure?
AOC 27	AOC 27, known as the MW-24 Bench, is located north of the upper yard of the compressor station and south of I-40. During employee interviews conducted by PG&E, a former PG&E Topock Compressor Station employee indicated this area was also used as a potential waste disposal area. In January 2008, during trenching activities in the MW-24 bench area associated with installation of a control panel related to the upland *in-situ* pilot test, debris consisting mostly of treated wood, concrete, and scrap steel/tin (including a possible fragment of a storage tank) were encountered.	No data have been collected in this area.	Title 22 metals, hexavalent chromium, pesticides, PAHs, VOCs, SVOCs, PCBs, TPH, pH, dioxins and furans (if burn material present)	Yes
AOC 28	AOC 28, the Pipeline Drip Legs, consists of three drip legs associated with the 300A and 300B pipelines are located to the east of the compressor station and a drip leg for the 300B pipeline downstream of the compressor station in Bat Cave Wash. A drip leg collects pipeline liquids by gravity. It is connected to a valve used to drain the pipeline liquids to a fixed or portable tank.	No data have been collected in this area.	TPH, PAHs, and PCBs	Yes
AOC 29	AOC 29, the Interim Measure-3 Treatment Plant, is located north of Interstate-40. The Interim Measure-3 provides hydraulic control of the plume boundaries near the Colorado River to maintain a landward gradient. This facility was established and is operated under modern waste management laws, and will be closed pursuant to a decommissioning plan. Investigation of this AOC has been postponed until the plant is closed.	No data have been collected in this area.	Title 22 metals, hexavalent chromium, sodium, chloride	No
AOC 30	AOC 30, the MW 20 Bench, is located between the National Trails Highway and the Colorado River. This area is part of the floodplain reductive zone in-situ pilot test. This facility was established and is operated under modern waste management laws and will be closed in accordance with agency requirements; therefore, investigation of this AOC is postponed until this unit is closed.	No data have been collected in this area.	Title 22 metals, hexavalent chromium, sodium, chloride	Yes

TABLE 1.2-1
Historical Activities Summary, Constituents Exceeding Interim Screening Levels for Soil RFI/RI Units Outside the Fence Line, Perimeter Area, and Storm Drains, and Associated Analytical Suites
Groundwater Remedy Operation and Maintenance Manual
Volume 4: Soil Management Plan
PG&E Topock Compressor Station, Needles, California

Units	Summary of Historical Activities	Constituents Exceeding Interim Screening Levels	Analytical Suites[1]	Overlaps or Is within 20 feet of Groundwater Remedy Infrastructure?
AOC 31	AOC 31, the Teapot Dome oil pit, is located on the northeast side of the facility, just outside the compressor station fence line. It is located within and overlaps with the Perimeter Area investigation. Former employees indicated that they had been told that the Teapot Dome restaurant provided oil changes, and that oil from vehicles was dumped into a pit. Potential wastes in this area pre-date the construction of the compressor station.	No data have been collected in this area.	Title 22 metals, hexavalent chromium, TPH, SVOCs, PAHs, and PCBs	No
UA 1	UA 1 is located north of the gas pipeline road near the former evaporation ponds. During site investigations, a former employee identified this area as a possible burial for asbestos-covered metal pipes. In 2008, a geophysical survey did not reveal any presence of the buried pipes, only small metallic anomalies found underground. This area will be investigated further, but no historical data have been documented. UA-1 is located within an especially culturally sensitive area, and the Tribes have expressed their desire to avoid or greatly limit any further activity in this area.	No data have been collected in this area.	Asbestos	No
UA 2	UA 2, the former 300B Pipeline Drip Tank, is located southeast of the plant on a shelf in the hill next to old Route 66. In 1994, investigation found oil-stained soil in a small area underneath and adjacent to this tank. In 1996 the tank was removed, and a cleanup was implemented. Soil was excavated to a depth of 5.5 ft. No further characterization is recommended in this area.	As, Ba, Pb, Zn	Title 22 metals, hexavalent chromium, VOCs, SVOCs, PAHs, TPH, pH, pesticides, PCBs	No
Perimeter Area[3]	The Perimeter Area is the area extending from the facility fence line to the toe of the slope. The majority of the Perimeter Area is lower than the station, and these topographically lower areas could have received runoff and incidental spills from the station. The Perimeter Area excludes those portions of the slope that are already part of a designated unit (i.e., portions of SWMU 1, AOC 9, AOC 10, and AOC 11). There has been no previous investigations or sampling in this area.	No data have been collected in this area.	Title 22 metals, hexavalent chromium, TPH, SVOCs, PAHs, and PCBs	Yes

TABLE 1.2-1
Historical Activities Summary, Constituents Exceeding Interim Screening Levels for Soil RFI/RI Units Outside the Fence Line, Perimeter Area, and Storm Drains, and Associated Analytical Suites
Groundwater Remedy Operation and Maintenance Manual
Volume 4: Soil Management Plan
PG&E Topock Compressor Station, Needles, California

Units	Summary of Historical Activities	Constituents Exceeding Interim Screening Levels	Analytical Suites[1]	Overlaps or Is within 20 feet of Groundwater Remedy Infrastructure?
Storm Drains[3]	Fifteen storm drain outfalls have been visually identified outside the fence line, but little information is known regarding the exact locations of historic lines and drainage to these lines. Contaminants discharged to catch basins within the compressor station would most likely have entered the storm drains and been transported to the outfalls.	No data have been collected in this area.	Title 22 metals, hexavalent chromium, TPH, PAHs, and PCBs	Yes

Notes:

[1] Analytical suites as presented in the Revised Final Soil RFI/RI Work Plan (CH2M HILL 2013).

[2] PCB analysis only on soil collected between 0 and 2 feet below ground surface.

[3] The Perimeter Area and Storm Drains are being investigated separately from the areas outside (Part A) and within (Part B) the fence line; once the data from the Perimeter Area and Storm Drains investigations have been collected, they will be combined with the appropriate existing Part A or B unit(s) or identified as a hotspot if there is no apparent connection to an existing unit.

Metals: Antimony (An); Arsenic (As); Barium (Ba); Beryllium (Be), Cadmium (Cd); Hexavalent Chromium (Cr^{+6}); Total Chromium (Total Cr); Cobalt (Co); Copper (Cu); Lead (Pb); Mercury (Hg); Molybdenum (Mo); Nickel (Ni); Selenium (Se); Silver (Hg); Thallium (Tl); Vanadium (V); Zinc (Zn)

Inorganics: Aluminum (Al); Calcium (Ca); Iron (Fe); Magnesium (Mg); Manganese (Mn); Potassium (K); Sodium (Na); Cyanide (CN)

Semivolatile Organic Compounds (SVOCs): 4-Methylphenol; Bis (2-ethylhexyl) phthalate; Di-N-butyl phthalate

Volatile Organic Compounds (VOCs): Methyl acetate

Polycyclic Aromatic Hydrocarbons (PAHs): 1-Methyl naphthalene; 2-Methyl naphthalene; Acenaphthene, Anthracene; Benzo (a) anthracene; Benzo (a) pyrene; Benzo (b) fluoranthene; Benzo (ghi) perylene; Benzo (k) fluoranthene; Chrysene; Dibenzo (a,h) anthracene; Fluoranthene; Fluorene; Indeno (1,2,3-cd) pyrene, Naphthalene; Phenanthrene; Pyrene, PAH Low molecular weight; PAH High Molecular weight; B(a)P Equivalent

Polychlorinated biphenyls (PCBs): Aroclor-1016; Aroclor-1254; Aroclor-1260; Total PCBs

Pesticides: 1,1-dichloro-2.2-bis[p-chlorophenyl] ethylene (4,4-DDE); 1,1,1-Trichloro-2,2-bis(4-chlorophenyl)ethane (4,4-DDT)

Total Petroleum Hydrocarbons (TPH): TPH as diesel; TPH as motor oil

TABLE 1.2-2
Historical Area Summary and Constituents Exceeding Background Threshold Value for Soil RFI/RI Units Inside the Fence Line and Associated Analytical Suites
Groundwater Remedy Operation and Maintenance Manual
Volume 4: Soil Management Plan
PG&E Topock Compressor Station, Needles, California

Units	Summary of Historical Activities	Constituents Exceeding Background Threshold Value	Analytical Suites[1]	Overlaps or Is within 20 feet of Groundwater Remedy Infrastructure?
SWMU 5	SWMU 5 is located inside the fence line and comprises the two former sludge-drying beds. Both of these beds were approximately 20 feet wide by 50 feet long. Bed 1, constructed in the early 1950s, was used to dehydrate lime sludge generated by the water softening process. From 1964 through 1969, it was used to treat chromium-bearing wastewater in the single-step chromate reduction process. A second bed was constructed in the late 1960s, and from 1969 through 1985, the two drying beds were used to dehydrate chromic hydroxide sludge. Use of these beds ceased in 1985. Closure of the drying beds was accomplished during Phase I of the Hazardous Waste Treatment System Closure, between 1988 and 1989.	Total Cr, Pb, Zn	Title 22 metals, hexavalent chromium, VOCs, TPH, SVOCs, and PAHs	Yes
SWMU 6	SWMU 6 was the chromate reduction tank located in the southern end of the lower yard. The tank was part of the two-step waste water treatment system installed in 1969 and was in operation through 1985. The tank was approximately 10 feet high and 5 feet in diameter, with a capacity of 1,500 gallons. Closure of this system was completed during Phase I Hazardous Waste Treatment System Closure.	Total Cr, Cr^{+6}, Zn	Title 22 metals, hexavalent chromium, VOCs, TPH, SVOCs, and PAHs	Yes
SWMU 8	SWMU 8 was located on the southern end of the lower yard in an area that is now covered by the new Fire Pump Building. SWMU 8 was the process pump tank that was part of the two-step waste water treatment system. The tank was approximately 8 feet high and 5.5 feet in diameter. The pump tank was used as a temporary holding tank for treated wastewater discharged from the precipitation tank, before it was pumped to the former percolation bed. In 1985, this unit was removed from service and closure was accomplished during Phase I.	Co, Cu, Ni	Title 22 metals, hexavalent chromium, VOCs, TPH, SVOCs, and PAHs	No
SWMU 9	SWMU 9, located in the southwestern portion of the lower yard, was the transfer sump that was part of a two-step wastewater treatment system. The sump was a pre-fabricated concrete septic tank that had the capacity of 1,500 gallons. The sump was 3 feet in diameter and 20 feet deep. From 1969 through 1985 effluent from the chromate reduction tank was routed through SWMU 9. In 1989, the transfer sump was removed during Phase 2 of the Hazardous Waste Treatment System Closure.	Be	Title 22 metals, hexavalent chromium, VOCs, TPH, SVOCs, and PAHs	Yes
SWMU 11	SWMU 11 consists of two 400-gallon sulfuric acid tanks, located in the cooling tower A (AOC 5) and cooling Tower B (AOC 6). These tanks were used to control pH to minimize scale, corrosion, and biological growth. The 1950s through 1984, sulfuric acid was delivered to the facility in drums and pumped directly into the basins. To date, no data have been collected to evaluate any potential concerns related to sulfuric acid tanks.	No data have been collected in this area.	Title 22 metals, hexavalent chromium, and pH	No

TABLE 1.2-2
Historical Area Summary and Constituents Exceeding Background Threshold Value for Soil RFI/RI Units Inside the Fence Line and Associated Analytical Suites
Groundwater Remedy Operation and Maintenance Manual
Volume 4: Soil Management Plan
PG&E Topock Compressor Station, Needles, California

Units	Summary of Historical Activities	Constituents Exceeding Background Threshold Value	Analytical Suites[1]	Overlaps or Is within 20 feet of Groundwater Remedy Infrastructure?
AOC 5	AOC 5 is the area surrounding original Cooling Tower A, and encompasses the cooling tower, former chemical shed, and SWMU 11. Most of the area is covered with gravel, but pavement bounds the surrounding area. From 1951 to 1985 chromium-based corrosion inhibitors were used to treat the cooling water, and stored within the chemical shed. Stained soils were observed within the shed during demolition of the shed in 2000. The stained soils were excavated.	Cr^{+6}, total Cr, Cu, Zn	Title 22 metals, hexavalent chromium, and pH	No
AOC 6	AOC 6 is the entire area surrounding Cooling Tower B, and encompasses the cooling tower, former chemical shed, and SWMU 11. Most of the area is covered with gravel, but pavement bounds the surrounding area. From 1951 to 1985 chromium-based corrosion inhibitors were used to treat the cooling water, and stored within the chemical shed. Stained soils were observed within the shed during demolition of the shed in 2000. The stained soils were excavated.	Cr^{+6}, total Cr, Cu, Ni, Zn	Title 22 metals, hexavalent chromium, and pH	No
AOC 7	AOC 7 consists of the hazardous materials storage area and loading dock, and the adjacent Carpenter Shop (former Chemical Storage Building). The current hazardous material storage area has been used since the mid-1980s to store chemical products used at the station. The former Chemical Storage Building was constructed in 1951 as part of the original station configuration.	No data have been collected in this area.	Title 22 metals, hexavalent chromium, VOCs, SVOCs, PAHs, PCBs, TPH, and pH	Yes
AOC 8	AOC 8 consists of a small storage locker used for paint storage. The locker is 5 feet wide by 5 feet long and is set back into southern retaining wall at the Compressor Station. The paint locker is constructed of steel with tight fitting doors, and located on pavement. No evidence of release is present.	No data have been collected in this area.	Title 22 metals, VOCs and TPH	Yes
AOC 13	AOC 13 consists of the current and former unpaved areas within the fence line. Many of the former unpaved areas are now paved and covered by buildings. Spills that have occurred at the facility and may have affected unpaved areas.	Be, Cd, Cr+6, Total Cr, Co, Cu, Pb, Mo, Ni, Se, Zn	Title 22 metals, hexavalent chromium, VOCs, TPH, SVOCs, PAHs, PCBs, and asbestos	Yes
AOC 15	AOC 15 consist of the auxiliary jacket cooling water pumps located north of the Auxiliary Building. AOC 15 is part of the closed-loop cooling system for the generator engines. From 1951 through 1985, chromium-based cooling water additives were used in the closed loop cooling systems. Leaks from valve seals and pumps may have affected the soil at AOC 15.	Cr^{+6}, total Cr, Cu, Pb, Mo, Ni, Zn	Title 22 metals, hexavalent chromium, and pH	No

TABLE 1.2-2
Historical Area Summary and Constituents Exceeding Background Threshold Value for Soil RFI/RI Units Inside the Fence Line and Associated Analytical Suites
Groundwater Remedy Operation and Maintenance Manual
Volume 4: Soil Management Plan
PG&E Topock Compressor Station, Needles, California

Units	Summary of Historical Activities	Constituents Exceeding Background Threshold Value	Analytical Suites[1]	Overlaps or Is within 20 feet of Groundwater Remedy Infrastructure?
AOC 16	AOC 16 is the sand blast shelter located in the lower yard. The sandblast shelter was installed in the early 1990s, and used primarily for smaller items (fixed infrastructure and large items are typically sandblasted in place).	No data have been collected in this area.	Title 22 metals	No
AOC 17	AOC 17 is the onsite septic system that serves the Auxiliary Building and nearby buildings. It consists of the septic located northeast of the air dryer building, and the associated leachfield. Wastewater from the facility laboratory of the Auxiliary Building is routed to the septic system. According to informal station drawings, the leachfield consists of 3 100-foot-long lines spaced 6 feet apart. The onsite septic system is believed to have been installed as part of the original compressor station facilities.	No data have been collected in this area.	Title 22 metals, hexavalent chromium, VOCs, TPH, SVOCs, and PAHs	Yes
AOC 18	AOC 18 consists of the hazardous waste transference pipelines associated with the hazardous waste treatment system, as well as the pipelines conveying the cooling tower blowdown to the lower yard. In the 1980s, the pipelines were uncovered, pressure tested, and removed in accordance with the hazardous waste treatment system closure plan. Visually contaminated soil was removed, confirmation sampling was conducted, and supplemental soil excavation was conducted where needed. Not all sections of the piping could be removed, and active sections were not pressure tested.	Be, Cr^{+6}, Total Cr, Pb, Mo, Ni, Zn	Title 22 metals, hexavalent chromium, pH, VOCs, TPH, SVOCs, and PAHs	Yes
AOC 19	AOC 19 is the Former Cooling Liquid Mixing and Jacket Cooling Water Hot Well Area located east of the Compressor Building. Employee interviews indicated that the hot well periodically overflowed. The hotwell was replaced with surge tanks circa 1967. Remnants of the hotwell were discovered and removed during a construction project in the 1990s. The former cooling liquid mixing area consists of a small concrete pad. Green droplets were noticed on the concrete pad during a routine test of a nearby eyewash fountain/safety shower in 2006. Elevated level of chromium were found in the green water.	Cd, Cr^{+6}, total Cr, Cu, Pb, Mo, Se, Zn	Title 22 metals, hexavalent chromium, and pH	No
AOC 20	AOC 20 consists of the industrial floor drains within the compressor station building and other buildings within the upper yard, as well as the associated pipelines, and the pipelines conveying the drainage to the oily water holding tank in the lower yard. Historically, the pipes associate with AOC 20 were made from vitrified clay.	No data have been collected in this area.	Title 22 metals, hexavalent chromium, VOCs, TPH, PCBs, and PAHs	No

TABLE 1.2-2
Historical Area Summary and Constituents Exceeding Background Threshold Value for Soil RFI/RI Units Inside the Fence Line and Associated Analytical Suites
Groundwater Remedy Operation and Maintenance Manual
Volume 4: Soil Management Plan
PG&E Topock Compressor Station, Needles, California

Units	Summary of Historical Activities	Constituents Exceeding Background Threshold Value	Analytical Suites[1]	Overlaps or Is within 20 feet of Groundwater Remedy Infrastructure?
AOC 21	AOC 21 is a former round structure found adjacent to Sludge Drying Bed No. 1. This round structure was filled with white material that was most likely water softener (lime) sludge. The material appears to be similar to the material found in Sludge Drying Bed No. 1. No information is available on the construction of this area, although it appears to be of earthen materials.	No data have been collected in this area.	Title 22 metals, hexavalent chromium, calcium, sodium, and pH	Yes
AOC 22	AOC 22 consists of a three-sided structure located in the upper yard, along the present compressor station fence line. A 1955 aerial photo appears to depict a drum that was near the structure. No further information about this structure is available.	No data have been collected in this area.	Title 22 metals, hexavalent chromium, pH, VOCs, TPH, SVOCs, PCBs, and PAHs	Yes
AOC 23	AOC 23 is the former water conditioning (water softening) building located in the southern part of the upper yard. Currently AOC 23 is used for storage of dry non-hazardous materials. Chemical feed tanks for the water softening process were located inside the building, and the precipitator for the water softening system was located outside the building.	No data have been collected in this area.	Title 22 metals, hexavalent chromium, VOCs, TPH, SVOCs, PAHs, PCBs, and pH	No
AOC 24	AOC 24 consists of the stained area near the API oil/water separator formerly located northeast of the northern scrubbers, as well as the footprint of the separator. The staining is apparent in 1955 aerial photographs and some plant photographs. The separator was later moved and reused as part of the old oily water treatment system adjacent to Sludge Drying Bed No. 1.	No data have been collected in this area.	Title 22 metals, hexavalent chromium, VOCs, TPH, SVOCs, PAHs, PCBs, and pH	No
AOC 25	AOC 25 consists of the compressor and generator engine basements. There are 10 compressor engines, 9 of which are still active, and four generators engines. Each of the engines is mounted on a concrete pedestal on a concrete foundation. The pedestal is surrounded by a concrete trench. The trench around the pedestal is known as the basement. Drips and leaks from the engines would discharge into the drains in the basements, and enter AOC 20. Surface and shallow subsurface site investigation and soil removal have been conducted in areas immediately adjacent to the auxiliary and compressor buildings.	No data have been collected in this area.	Title 22 metals, hexavalent chromium, VOCs, TPH, SVOCs, PAHs, PCBs, and asbestos	No

TABLE 1.2-2
Historical Area Summary and Constituents Exceeding Background Threshold Value for Soil RFI/RI Units Inside the Fence Line and Associated Analytical Suites
Groundwater Remedy Operation and Maintenance Manual
Volume 4: Soil Management Plan
PG&E Topock Compressor Station, Needles, California

Units	Summary of Historical Activities	Constituents Exceeding Background Threshold Value	Analytical Suites[1]	Overlaps or Is within 20 feet of Groundwater Remedy Infrastructure?
AOC 26	AOC 26 is the location of the former scrubber oil sump located in the lower yard south of the South Scrubbers. The sump received pipeline liquids of the natural gas scrubbers, as well as oil from the oil bath filters until the filters were taken out of service in the 1960s. The scrubber sump was removed in 1996 as part of an upgrade to the waste oil system. The area was investigated and contaminated soil was removed to the degree feasible (excavation was limited by the presence of infrastructure). Residual contamination is present below the maximum excavation depth (approximately 10 feet).	No data have been collected in this area.	Title 22 metals, hexavalent chromium, VOCs, TPH, SVOCs, PAHs, PCBs, and pH	No
AOC 32	AOC 32 is the oil storage area in the upper yard immediately west of the visitor parking lot. AOC 32 contains five 7,150-gallon capacity oil storage tanks, the steel-lined waste oil sump, and two 150-gallon capacity lubricating oil surge tanks. The tanks and oil sump are part of the original compressor station installation. The tanks and sump are located within a concrete containment structure. The sidewalls of the containment structure are apparent in a ca. 1956 station photograph; however, it is uncertain if the floor of the oil storage area has always been paved. Associated piping is also located within the containment. The containment structure appears to be in good repair; an inspection conducted in 1994 indicated that it was in good condition at the time. The dirty oil sump receives waste oil from the oil/water separator, and pipeline liquids collected from the scrubbers. It formerly received used oil from the scrubber sump.	No data have been collected in this area.	Title 22 metals, hexavalent chromium, VOCs, TPH, SVOCs, PAHs, and PCBs	No
AOC 33	AOC 33 is the potential burn area located near AOC 17. This area was identified when PG&E conducted additional interviews with current and former employees to collect new anecdotal information pertaining to historical compressor station practices. Several employees reported that PG&E may have conducted a yearly fire training exercise during which materials were set on fire and employees practiced extinguishing the fire. The employees indicated that these fire extinguishing drills took place in the early 1980s (and may have taken place prior to then) and continued into the 1990s.	No data have been collected in this area.	Title 22 metals, hexavalent chromium, VOCs, TPH, SVOCs, PAHs, PCBs, asbestos, and dioxin and furans	Yes
Unit 4.3	Unit 4.3 is the oil/water holding tank that was installed in 1970. It was a cylindrical steel tank 15 feet long by 5 feet in diameter that was used to collect oily water from the compressor floor drainage, engine and steam-cleaning operations, and other activities discharging to AOC 20.	None, sampled only for TPH.	Title 22 metals, hexavalent chromium, pH, VOCs, TPH, SVOCs, and PAHs	Yes

TABLE 1.2-2

Historical Area Summary and Constituents Exceeding Background Threshold Value for Soil RFI/RI Units Inside the Fence Line and Associated Analytical Suites

Groundwater Remedy Operation and Maintenance Manual

Volume 4: Soil Management Plan

PG&E Topock Compressor Station, Needles, California

Units	Summary of Historical Activities	Constituents Exceeding Background Threshold Value	Analytical Suites[1]	Overlaps or Is within 20 feet of Groundwater Remedy Infrastructure?
Unit 4.4	Unit 4.4 was the oil water separator located adjacent to Unit 4.3 (the API oil/water separator relocated from the area northeast of the north scrubbers. Unit 4.4 was equipped with an underflow weir to control discharge, and the floating oil was transferred by hose to a portable waste oil storage tank.	None, sampled only for TPH.	Title 22 metals, hexavalent chromium, pH, VOCs, TPH, SVOCs, and PAHs	No
Unit 4.5	Unit 4.5 was the portable waste oil storage tank adjacent to the Unit 4.3 and 4.4. Skimmed oil from Unit 4.4 was discharged into Unit 4.5. The portable tank was stationed on a concrete pad; when it was full it was transported to the east side of the facility, and pumped into the waste oil tank. Starting in 1975, the oil was either sold for reuse or transported to a recycling center.	None, sampled only for TPH.	Title 22 metals, hexavalent chromium, pH, VOCs, TPH, SVOCs, and PAHs	No

Notes:

[1] Analytical suites as presented in the Revised Final Soil RFI/RI Work Plan (CH2M HILL 2013).

Metals: Antimony (An); Arsenic (As); Barium (Ba); Beryllium (Be), Cadmium (Cd); Hexavalent Chromium (Cr^{+6}); Total Chromium (Total Cr); Cobalt (Co); Copper (Cu); Lead (Pb); Mercury (Hg); Molybdenum (Mo); Nickel (Ni); Selenium (Se); Silver (Hg); Thallium (Tl); Vanadium (V); Zinc (Zn)

Inorganics: Aluminum (Al); Calcium (Ca); Iron (Fe); Magnesium (Mg); Manganese (Mn); Potassium (K); Sodium (Na); Cyanide (CN)

Semivolatile Organic Compounds (SVOCs): 4-Methylphenol; Bis (2-ethylhexyl) phthalate; Di-N-butyl phthalate

Volatile Organic Compounds (VOCs): Methyl acetate

Polycyclic Aromatic Hydrocarbons (PAHs): 1-Methyl naphthalene; 2-Methyl naphthalene; Acenaphthene, Anthracene; Benzo (a) anthracene; Benzo (a) pyrene; Benzo (b) fluoranthene; Benzo (ghi) perylene; Benzo (k) fluoranthene; Chrysene; Dibenzo (a,h) anthracene; Fluoranthene; Fluorene; Indeno (1,2,3-cd) pyrene, Naphthalene; Phenanthrene; Pyrene, PAH Low molecular weight; PAH High Molecular weight; B(a)P Equivalent

Polychlorinated biphenyls (PCBs): Aroclor-1016; Aroclor-1254; Aroclor-1260; Total PCBs

Pesticides: 1,1-dichloro-2.2-bis[p-chlorophenyl] ethylene (4,4-DDE); 1,1,1-Trichloro-2,2-bis(4-chlorophenyl)ethane (4,4-DDT)

Total Petroleum Hydrocarbons (TPH): TPH as diesel; TPH as motor oil

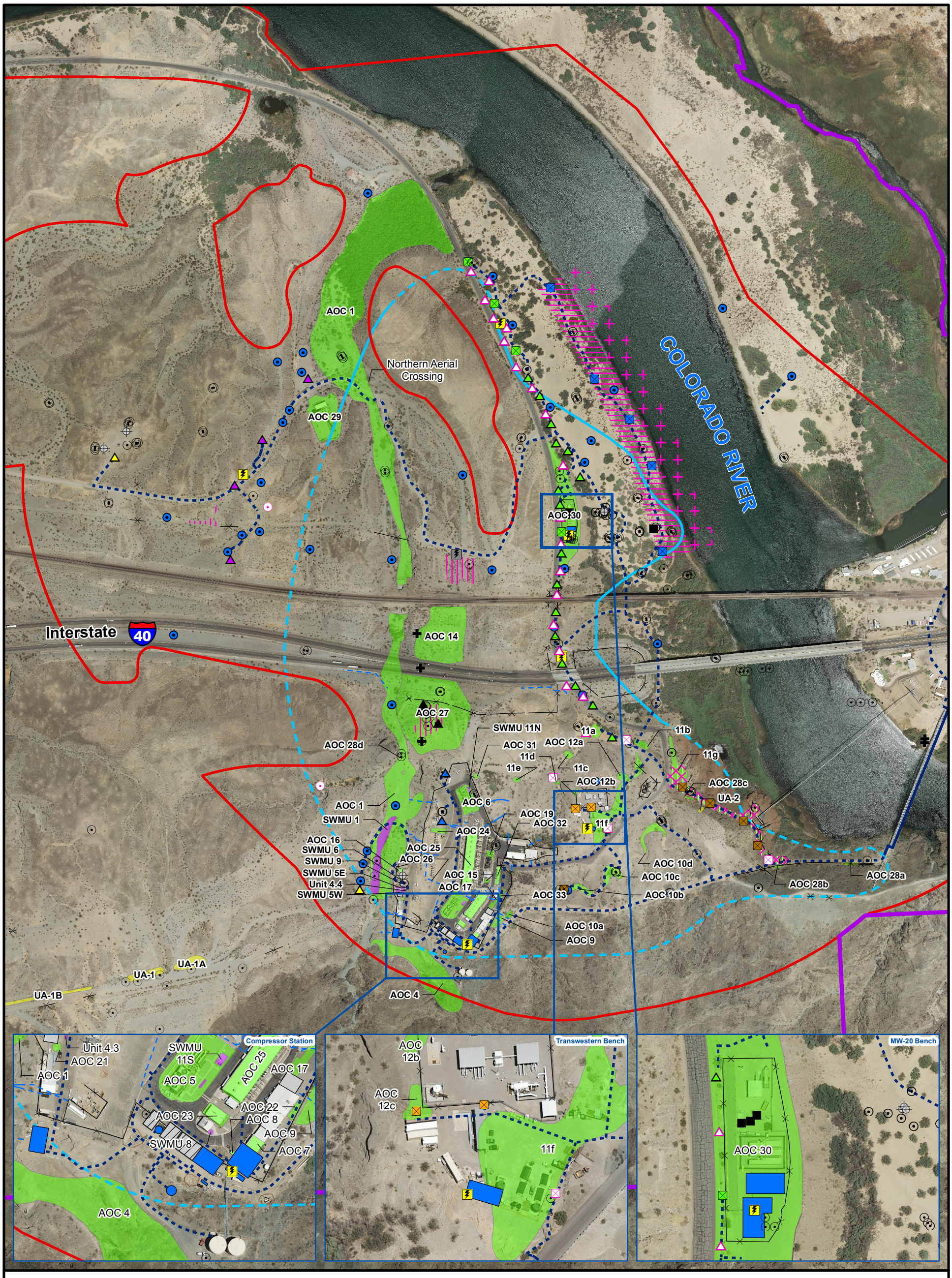

LEGEND

Existing Wells:
- Extraction Well
- Injection Well
- Monitoring Well
- Water Supply Well

Provisional Wells:
- Extraction Well
- Injection Well
- Monitoring Well
- Area for East Ravine (ER) Wells (ER-7 to ER-11)
- Area for Potential Slant Well Screens
- Area for Inner Recirculation Loop (IRL) Wells
- Area for River Bank Extraction Wells

Planned Wells:
- Extraction, East Ravine
- Extraction, National Trails Highway (NTH) In-situ Reactive Zone (IRZ)
- Extraction, Riverbank
- Extraction, Transwestern Bench
- Injection, Freshwater
- Injection, Inner Recirculation Loop
- Injection, NTH IRZ
- Injection, Topock Compressor Station
- Remedy Monitoring Well
- Recirculation Well
- Area for Monitoring Well MW-T

Transformers
- Planned Transformer
- Future Provisional Transformer

- Site Fence Boundary
- Stormwater Piping Below Ground
- Stormwater Piping Above Ground

Pipeline Corridor for Remedy
- Aboveground Pipe
- Underground Pipe/Conduit
- Area of Potential Effects (APE)
- EIR Project Area

Work Areas
- Solid Waste Management Unit (SWMU)
- Area of Concern (AOC)
- Other

Remedy Facilities
- Proposed Remedy Structure
- Contingent Freshwater Pre-injection Treatment System

Approximate extent of hexavalent chromium [Cr(VI)] concentrations exceeding 32 micrograms per liter (µg/L) at any depth in groundwater based on fourth quarter 2013 sampling events. Dashed where based on limited data.

Notes:
1. All wells and remedy structure locations are approximate.
2. AOC 13 consists of the current and former unpaved areas within the fence line.AOC 18 consists of the hazardous waste transference pipelines and cooling tower blowdown pipelines.

N

0 550
Feet

FIGURE 1.0-1
GROUNDWATER REMEDY FEATURES, SOLID WASTE MANAGEMENT UNITS, AND AREAS OF CONCERN
GROUNDWATER REMEDY IMPLEMENTATION -
SOIL MANAGEMENT PLAN
PG&E TOPOCK COMPRESSOR STATION,
NEEDLES, CALIFORNIA

CH2MHILL

Path: R:\PGEAlliance\Topock\MapFiles\2015\CMS\100PercentDesign\OM_Manual\FIG101_RemedyLayout_AOCs_Samples.mxd Date Saved: 10/6/2015 12:15:03 PM

SECTION 2

Soil Management

Soil that may be displaced in the vicinity of the groundwater remedy system during drilling, construction, and O&M activities that are part of the groundwater remediation project or decommissioning and removal of the IM-3 system will be managed according to the processes described in this SMP. This section identifies Soil RFI/RI Investigation Areas in the vicinity of the groundwater remedy system and IM-3 system, and describes the processes for soil characterization, soil screening and classification, handling, short-term storage, and longer storage of displaced soil.

The process presented herein for determining whether displaced soil (including drill cuttings) is hazardous waste, is in compliance with California action-specific ARAR #74 (22 CCR Section 66262.11), Requirements for Waste Determination (DOI 2010). Once determined to be a hazardous waste, the waste will be managed in compliance with California action-specific ARARs #75 through #80, and #84 through #86 (DOI 2010):

- ARAR #75 (22 CCR 66262.12): USEPA identification number
- ARAR #76 (22 CCR, Div 4.5, Ch 14, Article 2): General requirements for hazardous waste facilities
- ARAR #77 (22 CCR 66262.20 and 66262.22): Use of hazardous waste manifest
- ARAR #78 (22 CCR 66262.30, 66262.31, 66262.32 and 66262.33): Packaging, marking, labeling, and placarding hazardous waste shipments
- ARAR #79 (22 CCR 66262.34): Accumulation requirements for hazardous waste
- ARAR #80 (22 CCR 66262.40 and 66262.41): Recordkeeping
- ARAR #84 (22 CCR, Div 4.5, Ch 14, Article 9): Use and management of containers
- ARAR #85 (22 CCR, Div 4.5, Ch 14, Article 10): Tank systems
- ARAR #86 (22 CCR, Div 4.5, Ch 14, Article 12): Waste piles for RCRA hazardous waste

In addition, to maximize onsite reuse of displaced soil and minimize offsite transportation and disposal of site soil, characterization, screening, handling, and storage processes were developed following guidelines in the *Revised Management Protocol for Handling and Disposition of Displaced Site Material, Topock Remediation Project, Needles, California* (Appendix B).

2.1 Soil RFI/RI Investigation Areas Intersected by the Groundwater Remedy Project

At the final design stage, proposed remedy pipeline/conduit alignments (includes direct burial pipelines/conduits, pipeline trenches, and remediation wells [i.e., injection and extraction wells] that are connected to those pipelines), remedy structures, and new monitoring well will intersect twenty-four Soil RFI/RI Investigation Areas. These areas are listed below and shown on Figure 1.0-1:

- SWMU 1 – Former Percolation Bed
- SWMU 5 – Sludge-Drying Beds
- SWMU 6 – Chromium Reduction Tank
- SWMU 9 – Transfer Sump
- AOC 1 – Area Around Former Percolation Bed
- AOC 4 – Debris Ravine
- AOC 7 – Hazardous Materials Storage Area
- AOC 8 – Paint Locker

- AOC 9 – Southeast Fence Line (Outside Visitor Parking Area)
- AOC 10 – East Ravine
- AOC 11 – Topographic Low Areas
- AOC 12 – Fill Areas
- AOC 13 – Unpaved Areas within the Compressor Station
- AOC 17 – Onsite Septic System
- AOC 18 – Combined Hazardous Waste Transference Pipelines
- AOC-21 – Round Area by Sludge Drying Beds
- AOC 22 – Unidentified Three-sided Structure
- AOC 27 – MW-24 Bench
- AOC 28 – Pipeline Drip Legs
- AOC 30 – MW 20 Bench
- AOC 33 – Potential Former Burn Area near AOC 17
- Unit 4.3 – Oil/Water Holding Tank
- Perimeter Area outside of but adjacent to the Compressor Station fence line
- Storm Drain System

The decommissioning and removal of the IM-3 system will affect two AOCs – AOC 29 (IM-3 Treatment Plant) and AOC 30 (MW 20 Bench).

These Soil RFI/RI Investigation Areas are currently being investigated under the Soil RFI/RI program. Tables 1.2-1 and 1.2-2 provide a summary of historical activities at each of these investigation areas, a list of constituents that exceeded interim screening levels, and the proposed analytical suites as presented in the revised Soil FRI/RI Work Plan. Existing soil data collected from within AOCs will be used to assess required protection of workers for health and safety purposes. Personnel engaged in field activities within known AOC areas will have completed the Occupational Safety Health Administration 40-hour health and safety training that meet the requirements of Title 29 CFR Section 1910.120 and Title 8 CCR Section 5192. All personnel will read applicable project-specific health and safety plans.

2.2 Soil and Waste Characterization Process

Soil in the vicinity of the groundwater remedy system expected to be displaced will be pre-characterized following the Groundwater Remedy Implementation—Baseline Soil Sampling and Analysis Plan (Baseline SAP), included as Appendix A of this document. The baseline soil sampling results will be screened following the process described below in Section 2.3 to classify the displaced soil for handling, storage, and/or disposal purposes. Soil generated during 1) post-construction O&M in or near Soil RFI/RI Investigation Areas that has not been pre-characterized and 2) the decommissioning and removal of the IM-3 system infrastructure used for the groundwater remedy, will be stockpiled or placed in lined roll-off bins at the work site, if practicable, or onsite in a temporary storage area designated by PG&E until they have been characterized.

Field segregation of soil will be a key step in the process of management of displaced soil for any ground disturbance activities that occur during remedy construction. As soil is displaced, any soil with odors or visual evidence of contamination will be segregated, characterized, and handled following procedures outlined in this SMP.

Representative sample profile results, existing soil sample results, and knowledge of the area history will be used to assess waste classification for displaced soil that has not been pre-characterized. Additional characterization of displaced soil from or near Soil RFI/RI Investigation Areas will be performed as needed. In general, characterization will entail collection of composite samples from roll-off bins and stockpiles. One four-point composite sample will be taken from each roll-off bin. For stockpiles, one four-point composite sample will be collected per 250 cubic yards.

The waste characterization soil samples collected within or near Soil RFI/RI Investigation Areas will be analyzed for the applicable Soil RFI/RI Investigation Area analytical suite presented in Tables 1.2-1 and 1.2-2. The samples

collected outside areas of known or suspected contamination will be analyzed for PAHs and lead. Analytical results will be screened according to the procedure listed in Section 2.3 to classify the soil for handling, storage, and disposal purposes. It is imperative to coordinate with the waste hauler and disposal facility to ensure proper completion of the profile.

Soil at 1 foot below ground surface (bgs) from each new monitoring, extraction, and injection well locations will be characterized per Section 2.3 as part of the Baseline SAP. Drill cuttings from installation of new monitoring, extraction, and injection wells will be containerized in 55-gallon U.S. Department of Transportation (DOT) drums or lined roll-off bins and characterized as described below. Drill cuttings from RFI/RI Investigation Areas will be segregated from those not within Investigation Areas to prevent comingling. The drill cuttings drums/bins will be stored onsite in a temporary storage area designated by PG&E until they have been characterized. Drum and roll-off bin storage are described in Section 3.1.

Characterization of drilling cuttings will be performed by collection of samples as follows:

- For one drum, one discrete sample will be collected from the drum. The sample will be collected from the center of the drum from at least 12-inches below the surface of the soil.
- For 2 to 10 drums, one discrete sample will be collected from each drum and composited into a single composite sample.
- For more than 10 drums, one composite sample will be collected for every 10 drums.
- For each roll-off bin, one four-point composite sample will be taken from the roll-off bin.

The samples will be analyzed for applicable Soil RFI/RI Investigation Area analytical suite presented in Tables 1.2-1 and 1.2-2. Analytical results will be screened according to the procedure listed in Section 2.3 to classify the soil for handling, storage, and disposal purposes.

2.3 Screening and Classification of Soil

The following process for screening and classification of displaced soil in compliance with California action-specific ARAR #74 (22 CCR 66262.11) is based on the *Revised Management Protocol for Handling and Disposition of Displaced Site Material, Topock Remediation Project, Needles, California* (PG&E 2015) (see Appendix B).

Analytical results from the baseline soil sampling or other characterization of soil samples (i.e., drum or roll-off bins, or areas not pre-characterized) will be used to assess whether displaced soil is suitable for retention onsite for eventual return, reuse, or replacement, or if the soil must be removed from the site for disposal in accordance with applicable state and federal laws and regulations. Analytes detected in the baseline soil sampling or other characterization of soil samples above laboratory detection limits will be screened against the screening values included on Tables 2.4-1 and 2.4-2. These screening values include the following:

- **Interim Screening Levels (Table 2.4-1)** – The screening levels for metals are predominantly Topock-specific soil background values. However, if a background value is not available then the lesser of the DTSC Residential Screening Level (*Human Health Risk Assessment Note 3 – DTSC-Modified Screening Levels* [HERO 2015]) or the ecological comparison value is used. If a DTSC Residential Screening Level is not available, then the lesser of the USEPA residential regional screening level or the ecological comparison value is used (the source document for the ecological comparison values is included in Appendix D of this SMP). These levels are the most conservative, and it is assumed that the project-specific soil cleanup goal will be equal to or greater than these levels. Once established, the project-specific cleanup goals will replace the interim screening levels.
- **Hazardous Waste Toxicity Characteristic Levels (Table 2.4-2)** – These values will be used to assess if the soil should be classified as a non-hazardous waste, a state (non-RCRA California) hazardous waste, or a federal (RCRA) hazardous waste. Specifically, total constituent concentrations expressed in milligrams per kilogram (mg/kg) will be compared to the hazardous waste characteristic levels in Table 2.4-2, and will be evaluated as follows:

- Step 1 – If the total constituent concentration exceeds the total threshold limit concentration (TTLC), the soil represented by the sample will be classified as a non-RCRA hazardous waste. Additional evaluation of the soluble threshold limit concentration (STLC), as described in Step 3 below, will not be performed.
- Step 2 – If the total constituent concentration exceeds the numeric value of the RCRA toxicity characteristic (TC) level by about 20 times or more, the toxicity characteristic leaching procedure (TCLP) will be performed. If the constituent concentration in the TCLP leachate exceeds the TC level, the soil represented by the sample will be classified as a RCRA hazardous waste. Additional evaluation of the STLC, as described in Step 3 below, will not be performed.
- Step 3 – If the sample has not been classified as hazardous waste in Steps 1 or 2, the total constituent concentration will be compared to the STLC. If the total constituent concentration exceeds the numeric value of the STLC by 10 times or more, the California Waste Extraction Test (WET) will be performed. If the constituent concentration in the WET exceeds the STLC, the soil represented by the sample will be classified as a non-RCRA hazardous waste.
- Step 4 – If the sample has not been classified as a hazardous waste in Steps 1, 2, or 3, the soil represented by the sample will be not be classified or managed as hazardous waste.

Subsequent to screening, soil that may be displaced in the vicinity of the groundwater remedy system will be classified into four categories and will be managed as follows:

- RCRA hazardous waste—The waste will be removed from the site within 90 days of generation and disposed of offsite in accordance with applicable laws and regulations (California action-specific ARARs #78 and #79) and the Remedial Design/Remedial Action Consent Decree (CD) (DOI 2013). It is imperative to coordinate with the waste hauler and disposal facility to ensure proper completion of the waste profile and to avoid unnecessary delays in acceptance of a waste to a specific facility (as discussed in Section 4.0).
- Non-RCRA hazardous waste – Same as management of the RCRA hazardous waste.
- Non-hazardous soil for offsite disposal — Soil that is not classified as a hazardous waste, and is greater than the interim screening level or project-specific cleanup goal (once established), will be disposed of offsite (as discussed in Section 2.5).
- Clean soil—Soil that is not classified as a hazardous waste, and is equal to or below the interim screening level, is suitable for immediate return, reuse, or replacement onsite (as discussed in Section 2.4).

2.4 Handling and Storage of Clean Soil

Non-hazardous clean displaced soil (i.e., soil below interim screening levels or project-specific cleanup goals [once established]) will be stockpiled at the work site, if practicable, and recorded in an inventory as described in Section 5.0. Clean soil that was removed from trenches or excavations will be reused as backfill into the same trench or excavation area, if practicable. Clean soil that cannot be immediately used as backfill may be reused in other areas within the APE, or stockpiled for future reuse within the APE. Displaced soil that is stockpiled for future use will be managed following the BMPs described in Section 3.1.2 below, the BMPs Plan presented in Appendix C, the Construction/Remedial Action Work Plan, and the Groundwater Remedy Industrial SWPPP (Appendix E of Volume 1 of this O&M Manual).

Consistent with the special handling procedures requested by the Hualapai Department of Cultural Resources for displaced material generated from clay beds (this does not include clay-containing sediment mixtures, only clay beds), if clay bed(s) are encountered during construction, the clay material will be set aside on 100% cotton muslin (dye free) for future disposition following discussions with the Tribes. For the purposes of this project the identification of a “clay bed,” and therefore the application of this special handling procedure, will be based on the practicability for the clay material to be separated from other excavated soils or drill cuttings. For example, when trenching with a backhoe it may be possible to identify relatively thin beds of clay material (e.g., less than a foot) and separate it from the rest of the excavated soil, but when drilling with a method that doesn’t retrieve

cores that can be closely observed and precisely separated (e.g., hollow-stem auger), a relatively thin clay bed might not be identified or the clay material might become mixed with the rest of the cuttings to the point where it cannot be practicably separated. PG&E will notify the Agencies and Tribes in the event clay material is encountered and separated for storage. Further, salvage of topsoil during installation of trenches will be done where the proposed excavation will occur in areas where undisturbed topsoil may be present. In such areas, the upper 4 inches of soil will be carefully removed and placed near the excavation. The remaining subsurface-soil will then be excavated and stored separately from the topsoil. Following the installation of piping/conduits and backfilling of the trench, the topsoil will be replaced over the trench. Therefore, there will be no need for long-term storage of undisturbed topsoil. The rest of the excavated soil that is not undisturbed topsoil consists of desert soils that are generally low in nutrients and organic matter. Desert soil that has been subject to disturbance typically loses a large percentage of the available nutrient supply and important soil biota. Therefore, salvage of soil from disturbed areas will not occur and there will be no specific actions related to protecting biological integrity while these soils are being stored.

Additional segregation or sorting of material by size may occur, e.g., separating oversize rocks and gravel that are excavated during trenching but are not considered suitable for backfill. Oversize rocks may be used as erosion control (riprap) or processed (crushed) to provide aggregates in concrete, pavements or road surfacing. An onsite segregation unit for screening/crushing may be used to process material for onsite use.

The estimated volume of clean soil (generated from construction of the groundwater remedy) needing storage is approximately 11,000 cubic yards. This volume is based on the total net volume of soil excavated from trenches and building foundations located outside of Soil RFI/RI Investigation Areas that cannot be immediately used as backfill. During the 60% design comment resolution process (September 2013 through March 2014), potential locations for soil storage were evaluated by PG&E and Tribes and discussed with Agencies and landowners/managers (BLM/BOR). As a result of these discussions, PG&E proposed to use an area (located on federal land) in Moabi Regional Park for storage of non-hazardous clean soil (see Figure 2.4-1 at the end of this section). The estimated storage capacity in the identified area is 11,700 cubic yards. It is anticipated that clean soil will be stored in stockpiles and managed per the BMPs presented in the BMPs Plan (Appendix C) and summarized in Section 3.1.2 below, the Construction/Remedial Action Work Plan, and the Groundwater Remedy Industrial SWPPP (Appendix E of Volume 1 of this O&M Manual).

The volume and classification of clean displaced soil from the decommissioning and removal of the IM-3 system requiring storage will not be known until after the system has been decommissioned and removed, which will not occur until after the start of implementation of the groundwater remedy. Since the amount of displaced soil from the decommissioning and removal of the IM-3 system is expected to be minimal and characterization of this displaced soil will not occur until after the SMP has been revised to include the baseline soil sampling results, this displaced soil will be stored and managed following the same process as the soil displaced during the groundwater remedy installation and O&M provided in the revised SMP.

2.5 Handling and Off-site Disposal of Non-Hazardous Soil

The SMP and the revised management protocol for handling and disposition of displaced site material (Appendix B) exclude storage of soil that is non-hazardous but unsuitable for final disposition onsite because contaminants are present above the interim screening level or project-specific cleanup goal (once established).

The estimated volume of non-hazardous soil (from construction of the groundwater remedy) (i.e., soil above interim screening levels) needing disposal is approximately 4,000 cubic yards. This volume is based on the total net volume of soil excavated from trenches and building foundations located within Soil RFI/RI investigation areas. It is anticipated that this soil will be stored initially in roll-off bins and managed per the BMPs described in Section 3.1.3.

It is anticipated that project-specific cleanup goals will be established by the time of the decommissioning and removal of the IM-3 system. Displaced soils (from the decommissioning activities) that are above the clean-up goals will be disposed of offsite as described in the Revised Management Protocol (Appendix B). The volume and

classification of this soil will not be known until after the system has been decommissioned and removed, which will be after the start of implementation of the groundwater remedy. The amount of displaced soil from the decommissioning and removal of the IM-3 system is expected to be minimal.

TABLE 2.4-1
Reference List of Potentially Applicable Analytes and Associated Screening Levels (rev. July 2015)
Management Protocol for Handling and Disposition of Displaced Material
PG&E Topock Compressor Station, Needles, California

Group	Analyte	Interim Screening Level		Interim Screening Level Source	Hazardous Waste Disposal Criteria
Dioxins and Furans (ng/kg)					
	1,2,3,4,6,7,8-HpCDD	NE		Not Established	NE
	1,2,3,4,6,7,8-HpCDF	NE		Not Established	NE
	1,2,3,4,7,8,9-HpCDF	NE		Not Established	NE
	1,2,3,4,7,8-HxCDD	NE		Not Established	NE
	1,2,3,4,7,8-HxCDF	NE		Not Established	NE
	1,2,3,6,7,8-HxCDD	NE		Not Established	NE
	1,2,3,6,7,8-HxCDF	NE		Not Established	NE
	1,2,3,7,8,9-HxCDD	NE		Not Established	NE
	1,2,3,7,8,9-HxCDF	NE		Not Established	NE
	1,2,3,7,8-PeCDD	4.8		EPA Residential RSL	NE
	1,2,3,7,8-PeCDF	NE		Not Established	NE
	2,3,4,6,7,8-HxCDF	NE		Not Established	NE
	2,3,4,7,8-PeCDF	NE		Not Established	NE
	2,3,7,8-TCDD	4.8		EPA Residential RSL	See Table 2
	2,3,7,8-TCDF	NE		Not Established	NE
	OCDD	NE		Not Established	NE
	OCDF	NE		Not Established	NE
	TEQ Avian	16		Soil Ecological Comparison Value (ECV)	NE
	TEQ Human	50		DTSC HHRA Note 2	NE
	TEQ Mammals	1.6		Soil Ecological Comparison Value (ECV)	NE
Metals (mg/kg)					
	Aluminum	16,400		Background Level	NE
	Antimony	0.285		Soil Ecological Comparison Value (ECV)	See Table 2
	Arsenic	11	*	Background Level	See Table 2
	Barium	410	*	Background Level	See Table 2
	Beryllium	0.672		Background Level	See Table 2
	Cadmium	1.1	*	Background Level	See Table 2
	Calcium	66,500		Background Level	NE
	Chromium, Hexavalent	0.83	*	Background Level	See Table 2
	Chromium, total	39.8	*	Background Level	See Table 2
	Cobalt	12.7	*	Background Level	See Table 2
	Copper	16.8		Background Level	See Table 2
	Cyanide	0.9		Soil Ecological Comparison Value (ECV)	NE
	Iron	55,000		EPA Residential RSL	NE
	Lead	8.39	*	Background Level	See Table 2
	Magnesium	12,100		Background Level	NE
	Manganese	402	*	Background Level	NE
	Mercury	0.0125		Soil Ecological Comparison Value (ECV)	See Table 2
	Molybdenum	1.37	*	Background Level	See Table 2
	Nickel	27.3	*	Background Level	See Table 2
	Potassium	4,400		Background Level	NE
	Selenium	1.47	*	Background Level	See Table 2
	Silver	5.15		Soil Ecological Comparison Value (ECV)	See Table 2
	Sodium	2,070		Background Level	NE
	Thallium	0.78		EPA Residential RSL	See Table 2
	Vanadium	52.2	*	Background Level	See Table 2
	Zinc	58	*	Background Level	See Table 2

TABLE 2.4-1
Reference List of Potentially Applicable Analytes and Associated Screening Levels (rev. July 2015)
Management Protocol for Handling and Disposition of Displaced Material
PG&E Topock Compressor Station, Needles, California

Group	Analyte	Interim Screening Level	Interim Screening Level Source	Hazardous Waste Disposal Criteria
Pesticides (µg/kg)				
	4,4-DDD	2.1	Soil Ecological Comparison Value (ECV)	See Table 2
	4,4-DDE	2	EPA Residential RSL	See Table 2
	4,4-DDT	1.9	EPA Residential RSL	See Table 2
	Aldrin	39	EPA Residential RSL	See Table 2
	alpha-BHC	86	EPA Residential RSL	NE
	alpha-Chlordane	470	Soil Ecological Comparison Value (ECV)	See Table 2
	beta-BHC	300	EPA Residential RSL	NE
	delta-BHC	300	EPA Residential RSL	NE
	Dieldrin	5	Soil Ecological Comparison Value (ECV)	See Table 2
	Endo sulfan I	470,000	EPA Residential RSL	NE
	Endo sulfan II	470,000	EPA Residential RSL	NE
	Endosulfan sulfate	470,000	EPA Residential RSL	NE
	Endrin	19,000	EPA Residential RSL	See Table 2
	Endrin aldehyde	19,000	EPA Residential RSL	NE
	Endrin ketone	19,000	EPA Residential RSL	NE
	gamma-BHC (Lindane)	570	EPA Residential RSL	See Table 2
	gamma-Chlordane	0.43	DTSC-Residential SLs	See Table 2
	Heptachlor	130	EPA Residential RSL	See Table 2
	Heptachlor Epoxide	70	EPA Residential RSL	See Table 2
	Methoxychlor	320,000	EPA Residential RSL	See Table 2
	Toxaphene	490	EPA Residential RSL	See Table 2
Polyaromatic Hydrocarbons (µg/kg)				
	1-Methyl naphthalene	18,000	EPA Residential RSL	NE
	2-Methyl naphthalene	240,000	EPA Residential RSL	NE
	Acenaphthene	3,600,000	EPA Residential RSL	NE
	Acenaphthylene	3,600,000	EPA Residential RSL	NE
	Anthracene	18,000,000	EPA Residential RSL	NE
	B(a)P Equivalent	16	EPA Residential RSL	NE
	Benzo (a) anthracene	160	EPA Residential RSL	NE
	Benzo (a) pyrene	16	EPA Residential RSL	NE
	Benzo (b) fluoranthene	160	EPA Residential RSL	NE
	Benzo (ghi) perylene	1,800,000	EPA Residential RSL	NE
	Benzo (k) fluoranthene	0.39	DTSC-Residential SLs	NE
	Chrysene	3.9	DTSC-Residential SLs	NE
	Dibenzo (a,h) anthracene	16	EPA Residential RSL	NE
	Fluoranthene	2,400,000	EPA Residential RSL	NE
	Fluorene	2,400,000	EPA Residential RSL	NE
	Indeno (1,2,3-cd) pyrene	160	EPA Residential RSL	NE
	Naphthalene	3,800	EPA Residential RSL	NE
	PAH High molecular weight	1,160	Soil Ecological Comparison Value (ECV)	NE
	PAH Low molecular weight	10,000	Soil Ecological Comparison Value (ECV)	NE
	Phenanthrene	1,800,000	EPA Residential RSL	NE
	Pyrene	1,800,000	EPA Residential RSL	NE
Polychlorinated Biphenyls (µg/kg)				
	Aroclor 1016	0.23	DTSC-Residential SLs	See Table 2
	Aroclor 1221	170	EPA Residential RSL	See Table 2

TABLE 2.4-1
Reference List of Potentially Applicable Analytes and Associated Screening Levels (rev. July 2015)
Management Protocol for Handling and Disposition of Displaced Material
PG&E Topock Compressor Station, Needles, California

Group	Analyte	Interim Screening Level	Interim Screening Level Source	Hazardous Waste Disposal Criteria
Polychlorinated Biphenyls (µg/kg)				
	Aroclor 1232	170	EPA Residential RSL	See Table 2
	Aroclor 1242	230	EPA Residential RSL	See Table 2
	Aroclor 1248	230	EPA Residential RSL	See Table 2
	Aroclor 1254	240	EPA Residential RSL	See Table 2
	Aroclor 1260	240	EPA Residential RSL	See Table 2
	Aroclor 1262	240	EPA Residential RSL	See Table 2
	Aroclor 1268	240	EPA Residential RSL	See Table 2
	Total PCBs	204	Soil Ecological Comparison Value (ECV)	See Table 2
Semivolatile Organic Compounds (µg/kg)				
	1,1´-Biphenyl	47,000	EPA Residential RSL	NE
	1,2,4,5-Tetrachlorobenzene	23,000	EPA Residential RSL	NE
	1,4-Dioxane	5,300	EPA Residential RSL	NE
	2,3,4,6-Tetrachlorophenol	1,900,000	EPA Residential RSL	NE
	2,4,5-Trichlorophenol	6,300,000	EPA Residential RSL	See Table 2
	2,4,6-Trichlorophenol	7.5	DTSC-Residential SLs	See Table 2
	2,4-Dichlorophenol	190,000	EPA Residential RSL	NE
	2,4-Dimethylphenol	1,300,000	EPA Residential RSL	NE
	2,4-Dinitrophenol	130,000	EPA Residential RSL	NE
	2,4-Dinitrotoluene	1,700	EPA Residential RSL	See Table 2
	2,6-Dinitrotoluene	360	EPA Residential RSL	NE
	2-Chloro naphthalene	4,800,000	EPA Residential RSL	NE
	2-Chlorophenol	390,000	EPA Residential RSL	NE
	2-Methylphenol (o-Cresol)	3,200,000	EPA Residential RSL	See Table 2
	2-Nitroaniline	630,000	EPA Residential RSL	NE
	3,3-Dichlorobenzidene	1,200	EPA Residential RSL	NE
	3-Nitroaniline	630,000	EPA Residential RSL	NE
	4,6-Dinitro-2-methylphenol	5,100	EPA Residential RSL	NE
	4-Chloro-3-methylphenol	6,300,000	EPA Residential RSL	NE
	4-Chloroaniline	2,700	EPA Residential RSL	NE
	4-Methylphenol (p-Cresol)	500	Soil Ecological Comparison Value (ECV)	See Table 2
	4-Nitroaniline	27,000	EPA Residential RSL	NE
	Acetophenone	7,800,000	EPA Residential RSL	NE
	Atrazine	2,400	EPA Residential RSL	NE
	Benzaldehyde	7,800,000	EPA Residential RSL	NE
	Benzoic acid	250,000,000	EPA Residential RSL	NE
	Benzyl alcohol	6,300,000	EPA Residential RSL	NE
	Bis (2-chloroethoxy) methane	190,000	EPA Residential RSL	NE
	Bis (2-ethylhexyl) phthalate	2,870	Soil Ecological Comparison Value (ECV)	NE
	Butyl benzyl phthalate	290,000	EPA Residential RSL	NE
	Caprolactam	31,000,000	EPA Residential RSL	NE
	Carbazole	1,600,000	EPA Residential RSL	NE
	Dibenzofuran	73,000	EPA Residential RSL	NE
	Diethyl phthalate	51,000,000	EPA Residential RSL	NE
	Dimethyl phthalate	51,000,000	EPA Residential RSL	NE
	Di-N-butyl phthalate	46.9	Soil Ecological Comparison Value (ECV)	NE
	Di-N-octyl phthalate	630,000	EPA Residential RSL	NE
	Hexachlorobenzene	210	EPA Residential RSL	See Table 2

TABLE 2.4-1
Reference List of Potentially Applicable Analytes and Associated Screening Levels (rev. July 2015)
Management Protocol for Handling and Disposition of Displaced Material
PG&E Topock Compressor Station, Needles, California

Group	Analyte	Interim Screening Level	Interim Screening Level Source	Hazardous Waste Disposal Criteria
Semivolatile Organic Compounds (µg/kg)				
	Hexachloroethane	1,800	EPA Residential RSL	See Table 2
	N-Nitroso-di-n-propylamine	78	EPA Residential RSL	NE
	N-nitrosodiphenylamine	110,000	EPA Residential RSL	NE
	Pentachlorophenol	1,000	EPA Residential RSL	See Table 2
	Phenol	19,000,000	EPA Residential RSL	NE
Total Petroleum Hydrocarbons (mg/kg)				
	TPH as diesel	240	SF RWQCB ESL for direct exposure (2013)	NE
	TPH as gasoline	770	SF RWQCB ESL for direct exposure (2013)	NE
	TPH as motor oil	10,000	SF RWQCB ESL for direct exposure (2013)	NE
Volatile Organic Compounds (µg/kg)				
	1,1,1,2-Tetrachloroethane	550	DTSC-Residential SLs	NE
	1,1,1-Trichloroethane	1,700	DTSC-Residential SLs	NE
	1,1,2,2-Tetrachloroethane	600	EPA Residential RSL	NE
	1,1,2-Trichloroethane	1,100	EPA Residential RSL	NE
	1,1,2-Trichlorotrifluoroethane (Freon 113)	40,000,000	EPA Residential RSL	NE
	1,1-Dichloroethane	1,600	DTSC-Residential SLs	NE
	1,1-Dichloroethene	230,000	EPA Residential RSL	See Table 2
	1,1-Dichloropropene	1,800	EPA Residential RSL	NE
	1,2,3-Trichlorobenzene	63,000	EPA Residential RSL	NE
	1,2,3-Trichloropropane	5.1	EPA Residential RSL	NE
	1,2,4-Trichlorobenzene	24,000	EPA Residential RSL	NE
	1,2,4-Trimethylbenzene	58,000	EPA Residential RSL	NE
	1,2-Dibromo-3-chloropropane	5.3	EPA Residential RSL	NE
	1,2-Dibromoethane	7.2	DTSC-Residential SLs	NE
	1,2-Dichlorobenzene	1,800,000	EPA Residential RSL	NE
	1,2-Dichloroethane	460	EPA Residential RSL	See Table 2
	1,2-Dichloropropane	1,000	EPA Residential RSL	NE
	1,3,5-Trimethylbenzene	210	DTSC-Residential SLs	NE
	1,3-Dichlorobenzene	1,800,000	EPA Residential RSL	NE
	1,3-Dichloropropane	420	DTSC-Residential SLs	NE
	1,4-Dichlorobenzene	2,600	EPA Residential RSL	See Table 2
	2,2-Dichloropropane	1,600,000	EPA Residential RSL	NE
	2-Chlorotoluene	480	DTSC-Residential SLs	NE
	2-Hexanone	200,000	EPA Residential RSL	NE
	4-Isopropyltoluene	1,900,000	EPA Residential RSL	NE
	Acetone	61,000,000	EPA Residential RSL	NE
	Acrolein	140	EPA Residential RSL	NE
	Acrylonitrile	0.068	DTSC-Residential SLs	NE
	Benzene	0.33	DTSC-Residential SLs	See Table 2
	Bis (2-chloroethyl) ether	230	EPA Residential RSL	NE
	Bis (2-chloroisopropyl) ether	4,900	EPA Residential RSL	NE
	Bromobenzene	290,000	EPA Residential RSL	NE
	Bromochloromethane	150,000	EPA Residential RSL	NE
	Bromodichloromethane	280	DTSC-Residential SLs	NE
	Bromoform	19,000	EPA Residential RSL	NE
	Bromomethane	6,800	EPA Residential RSL	NE

TABLE 2.4-1
Reference List of Potentially Applicable Analytes and Associated Screening Levels (rev. July 2015)
Management Protocol for Handling and Disposition of Displaced Material
PG&E Topock Compressor Station, Needles, California

Group	Analyte	Interim Screening Level	Interim Screening Level Source	Hazardous Waste Disposal Criteria
Volatile Organic Compounds (µg/kg)				
	Carbon disulfide	770,000	EPA Residential RSL	NE
	Carbon tetrachloride	0.099	DTSC-Residential SLs	See Table 2
	Chlorobenzene	280,000	EPA Residential RSL	See Table 2
	Chloroethane	3.1	DTSC-Residential SLs	NE
	Chloroform	320	EPA Residential RSL	See Table 2
	Chloromethane	110,000	EPA Residential RSL	NE
	cis-1,2-Dichloroethene	19	DTSC-Residential SLs	NE
	cis-1,3-Dichloropropene	1,800	EPA Residential RSL	NE
	Cyclohexane	6,500,000	EPA Residential RSL	NE
	Dibromochloromethane	750	EPA Residential RSL	NE
	Dibromomethane	23,000	EPA Residential RSL	NE
	Dichlorodifluoromethane	87,000	EPA Residential RSL	NE
	Ethylbenzene	5,800	EPA Residential RSL	NE
	Hexachlorobutadiene	1,200	EPA Residential RSL	See Table 2
	Hexachlorocyclopentadiene	1,800	EPA Residential RSL	NE
	Isophorone	570,000	EPA Residential RSL	NE
	Isopropylbenzene	1,900,000	EPA Residential RSL	NE
	m,p-Xylenes	550,000	EPA Residential RSL	NE
	Methyl acetate	24,000	DTSC-Residential SLs	NE
	Methyl ethyl ketone	27,000,000	EPA Residential RSL	See Table 2
	Methyl isobutyl ketone	5,300,000	EPA Residential RSL	NE
	Methyl tert-butyl ether (MTBE)	47,000	EPA Residential RSL	NE
	Methylcyclohexane	6,500,000	EPA Residential RSL	NE
	Methylene chloride	5.5	DTSC-Residential SLs	NE
	N-Butylbenzene	1,200	DTSC-Residential SLs	NE
	Nitrobenzene	5,100	EPA Residential RSL	See Table 2
	N-Propylbenzene	3,800,000	EPA Residential RSL	NE
	o-Xylene	650,000	EPA Residential RSL	NE
	p-Chlorotoluene	440	DTSC-Residential SLs	NE
	sec-Butylbenzene	2,200	DTSC-Residential SLs	NE
	Styrene	6,000,000	EPA Residential RSL	NE
	tert-Butylbenzene	2,200	DTSC-Residential SLs	NE
	Tetrachloroethene	0.6	DTSC-Residential SLs	See Table 2
	Toluene	1,100	DTSC-Residential SLs	NE
	trans-1,2-Dichloroethene	190	DTSC-Residential SLs	NE
	trans-1,3-Dichloropropene	1,800	EPA Residential RSL	NE
	Trichloroethene	940	EPA Residential RSL	See Table 2
	Trichlorofluoromethane (Freon 11)	730,000	EPA Residential RSL	NE
	Vinyl chloride	59	EPA Residential RSL	See Table 2
	Xylenes, total	650,000	EPA Residential RSL	NE

Notes:

This table presents a reference list of analytes and associated screening levels that may be applicable for making decisions related to disposition of displaced site materials. The specific analytes and screening levels applicable for characterization of displaced material will be determined based on the origin of the material and potential disposition locations.

Interim screening level is background value. If background value is not available then the lesser of the DTSC HHRA Note 3 Residential Screening Levels (DTSC Residential SL) or the ecological comparison value is used. If a DTSC Residential SL is not available, it is the lesser of the USEPA residential regional screening level or the ecological comparison value.

Background	"Final Soil Background Investigation at Pacific Gas and Electric Company Topock Compressor Station, Needles, California" (CH2M HIll 2009c)
DTSC-Residential SLs	Human Health Risk Assessment Note 3 – DTSC-Modified Screening Levels, May 2015.
EPA Residential RSL	United States Environmental Protection Agency Residential Soil Regional Screening Level (THQ=1.0), June 2015.
ECV	Ecological Comparison Values; ECV were calculated as needed for constituents detected during the Part A Phase I sampling (Arcadis 2008)
HHRA Note 2	DTSC Human Health Risk Assessment (HHRA) Note 2: Remedial Goals for Dioxins and Dioxin-like Compounds for Consideration at California Hazardous Waste Sites – Interim (May 2009).
SF RWQCB ESL	San Francisco Bay Regional Water Quality Control Board Environmental Screening Levels for residential direct exposure (2013)
*	One or more screening levels (EPA Residential RSL, DTSC-Residential SLs, ECV, or Soil SL) have values lower than the background level.
NE	not established
mg/kg	milligrams per kilogram
ng/kg	nanograms per kilogram
µg/kg	micrograms per kilogram

TABLE 2.4-2

Hazardous Waste Toxicity Characteristic Levels

Groundwater Remedy Operation and Maintenance Manual (Volume 4: Soil Management Plan)

PG&E Topock Compressor Station, Needles, California

Group	Analyte	TTLC [a, i]	STLC [b] Screen	RCRA TC [c] Screen	STLC [d, i] (from WET)	RCRA TC [e] (from TCLP)	EPA HW [f]
		mg/kg	mg/kg	mg/kg	mg/L	mg/L	
Asbetos							
	Asbestos	1%	NE	NE	NE	NE	NE
Dioxins and Furans							
	2,3,7,8-TCDD	0.01	0.01	NE	0.001	NE	NE
Metals							
	Antimony	500	150	NE	15	NE	NE
	Arsenic	500	50	100	5	5	D004
[j]	Barium	10,000	1,000	2,000	100	100	D005
	Beryllium	75	7.5	NE	0.75	NE	NE
	Cadmium	100	10	20	1	1	D006
	Chromium, Hexavalent	500	50	NE	5	NE	NE
[k]	Chromium, total	2,500	50	100	5	5	D007
	Cobalt	8,000	800	NE	80	NE	NE
	Copper	2,500	250	NE	25	NE	NE
	Lead	1,000	50	100	5	5	D008
	Mercury	20	2	4	0.2	0.2	D009
[l]	Molybdenum	3,500	3,500	NE	350	NE	NE
	Nickel	2,000	200	NE	20	NE	NE
	Selenium	100	10	20	1	1	D010
	Silver	500	50	100	5	5	D011
	Thallium	700	70	NE	7	NE	NE
	Vanadium	2,400	240	NE	24	NE	NE
	Zinc	5,000	2,500	NE	250	NE	NE
Pesticides							
	4,4-DDD	1	1	NE	0.1	NE	NE
	4,4-DDE	1	1	NE	0.1	NE	NE
	4,4-DDT	1	1	NE	0.1	NE	NE
	Aldrin	1.4	1.4	NE	0.14	NE	NE
	alpha-Chlordane	2.5	2.5	0.6	0.25	0.03	D020
	Dieldrin	8	8	NE	0.8	NE	NE
	Endrin	0.2	0.2	0.4	0.02	0.02	D012
	gamma-BHC (Lindane)	4	4	8	0.4	0.4	D013
	gamma-Chlordane	2.5	2.5	0.6	0.25	0.03	D020
	Heptachlor	4.7	4.7	0.16	0.47	0.008	D031
	Heptachlor Epoxide	4.7	4.7	0.16	0.47	0.008	D031
	Methoxychlor	100	100	200	10	10	D014
	Toxaphene	5	5	10	0.5	0.5	D015
Polychlorinated Biphenyls							
	Aroclor 1016	50	50	NE	5	NE	NE
	Aroclor 1221	50	50	NE	5	NE	NE
	Aroclor 1232	50	50	NE	5	NE	NE
	Aroclor 1242	50	50	NE	5	NE	NE
	Aroclor 1248	50	50	NE	5	NE	NE
	Aroclor 1254	50	50	NE	5	NE	NE
	Aroclor 1260	50	50	NE	5	NE	NE
	Aroclor 1262	50	50	NE	5	NE	NE
	Aroclor 1268	50	50	NE	5	NE	NE
	Total PCBs	50	50	NE	5	NE	NE

TABLE 2.4-2

Hazardous Waste Toxicity Characteristic Levels

Groundwater Remedy Operation and Maintenance Manual (Volume 4: Soil Management Plan)

PG&E Topock Compressor Station, Needles, California

Group	Analyte	TTLC [a, i]	STLC [b] Screen	RCRA TC [c] Screen	STLC [d, i] (from WET)	RCRA TC [e] (from TCLP)	EPA HW [f]
		mg/kg	mg/kg	mg/kg	mg/L	mg/L	
Polychlorinated Biphenyls							
Semivolatile Organic Compounds							
	2,4-Dinitrotoluene	NE	NE	2.6	NE	0.13	D030
g	2-Methylphenol (o-Cresol)	NE	NE	4,000	NE	200	D023
g	3-Methylphenol (m-Cresol)	NE	NE	4,000	NE	200	D024
g	4-Methylphenol (p-Cresol)	NE	NE	4,000	NE	200	D025
	Hexachlorobenzene	NE	NE	2.6	NE	0.13	D032
	Hexachloroethane	NE	NE	60	NE	3	D034
	Pentachlorophenol	17	17	2,000	1.7	100	D037
Volatile Organic Compounds							
	1,1-Dichloroethene	NE	NE	14	NE	0.7	D029
	1,2-Dichloroethane	NE	NE	10	NE	0.5	D028
	1,4-Dichlorobenzene	NE	NE	150	NE	7.5	D027
	2,4,5-Trichlorophenol	NE	NE	8,000	NE	400	D041
	2,4,6-Trichlorophenol	NE	NE	40	NE	2	D042
	Benzene	NE	NE	10	NE	0.5	D018
	Carbon tetrachloride	NE	NE	10	NE	0.5	D019
	Chlorobenzene	NE	NE	2,000	NE	100	D021
	Chloroform	NE	NE	120	NE	6	D022
	Hexachlorobutadiene	NE	NE	10	NE	0.5	D033
	Methyl ethyl ketone	NE	NE	4,000	NE	200	D035
	Nitrobenzene	NE	NE	40	NE	2	D036
	Tetrachloroethene	NE	NE	14	NE	0.7	D039
	Trichloroethene	2,040	2,040	10	204	0.5	D040
	Vinyl chloride	NE	NE	4	NE	0.2	D043

Notes:

NE	not established
mg/kg	milligrams per kilogram
mg/L	milligrams per liter
EPA HW	Environmental Protection Agency Hazardous Waste Code
TC	Toxicity Characteristic
TTLC	Total Threshold Limit Concentration
STLC	Soluble Threshold Limit Concentration
RCRA	Resource Conservation and Recovery Act
TCLP	Toxicity Characteristic Leaching Procedure
WET	California Waste Extraction Test

Hazardous waste critiera exist for kepone, 2,4-D, mirex, pyridine, and 2,45-TP (Silvex); however, since they are not contaminants of potential concern at the Topock site, they are excluded from this table.

a	Total Threshold Limit Concentration (TTLC) from 22 CCR 66261.24(a)(2). Calculated based on the concentration of the elements, not the compounds.
b	Screening level is 10x Soluble Threshold Limit Concentraction (STLC). If screening level is exceeded in total analysis, California Waste Extraction Test (WET) should be run to evaluate whether STLC is exceeded.
c	Screening level is 20x RCRA Toxicity Characteristic (TC). If screening level is exceeded in total analysis, Toxicity Characteristic Leaching Procedure (TCLP) should be run to evaluate whether RCRA TC is exceeded.
d	Soluble threshold limit concentration from 22 CCR 66261.24(a)(2), measured using the WET. Calculated based on the concentration of the elements, not the compounds.
e	RCRA TC level from 22 CCR 66261.24(a)(1), measured using the TCLP.
f	A waste is assigned a RCRA waste code for each constituent where the results of the TCLP equal or exceed the RCRA TC level.
g	If o-, m- and p-Cresol concentrations cannot be differentiated, the total cresol (D026) concentration is used. The regulatory level of total cresol is 200 mg/L.
i	In the case of asbestos and elemental metals, the specified concentration limits apply only if the substances are in a friable, powdered or finely divided state. Asbestos includes chrysotile, amosite, crocidolite, tremolite, anthophyllite, and actinolite.
j	TTLC and STLC exclude barite. TTLC excludes barium sulfate.
k	For STLC, if the waste does not exceed the RCRA TC or exhibit another RCRA hazardous characteristic, the STLC is 560 mg/L, not 5 mg/L.
l	For TTLC, excludes molybdenum disulfide.
h	Quantitation limit is greater than the calculated regulatory level. The quantitation limit therefore becomes the regulatory level.

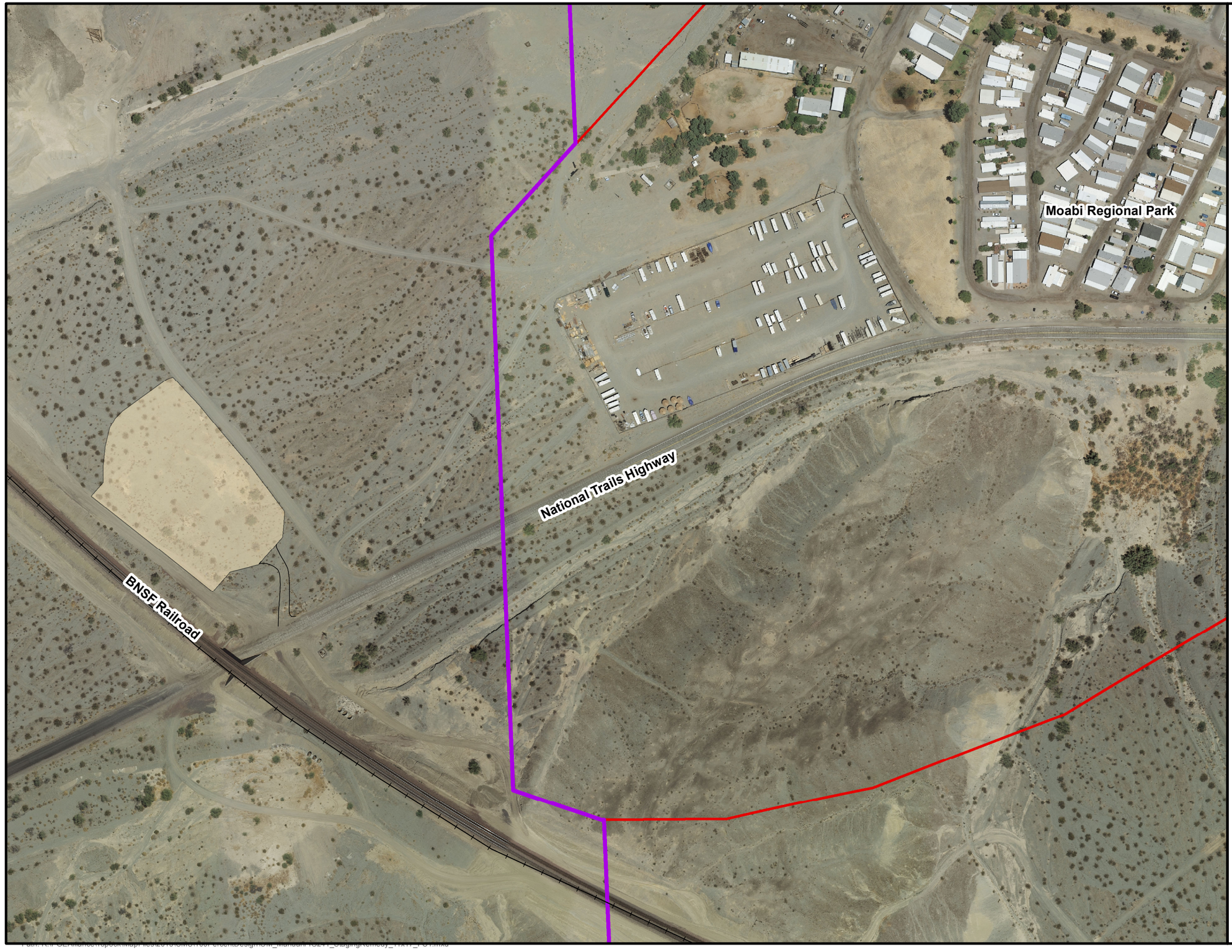

VICINITY MAP

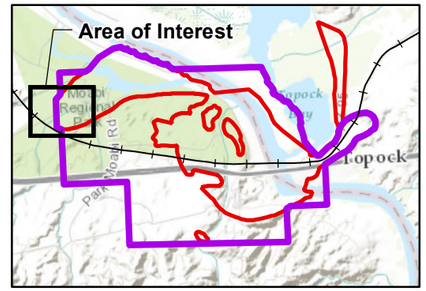

LEGEND

- Clean Soil Storage Area (2.56 Acres Approximate)
- Area of Potential Effects (APE)
- EIR Project Area

N

0 90 180 360 Feet

Service Layer Credits: Sources: Esri, HERE, DeLorme, Intermap, increment P Corp., GEBCO, USGS, FAO, NPS, NRCAN, GeoBase, IGN, Kadaster NL, Ordnance Survey, Esri Japan, METI, Esri China (Hong Kong), swisstopo, MapmyIndia, © OpenStreetMap contributors, and the GIS

FIGURE 2.4-1
CLEAN SOIL STORAGE AREA
GROUNDWATER REMEDY IMPLEMENTATION - SOIL MANAGEMENT PLAN
PG&E TOPOCK COMPRESSOR STATION, NEEDLES, CALIFORNIA

CH2MHILL

SECTION 3

Soil Storage

This section describes the storage procedures for soil displaced in the vicinity of the groundwater remedy system during drilling, construction, decommissioning, removal, and O&M activities at the site. Displaced soil will be segregated into the following streams:

- RCRA hazardous waste
- Non-RCRA hazardous waste
- Non-hazardous soil above interim screening levels or project-specific cleanup goals (once established)
- Clean soil

Soil that is classified as clean soil that is suitable for final deposition onsite will be managed following the BMPs described in Section 3.1.2 below, the PG&E Program Quality Assurance Project Plan (Appendix C of the Construction/Remedial Action Work Plan), and the Groundwater Remedy Industrial SWPPP (Appendix E of Volume 1 of this O&M Manual).

The procedures for accumulation of hazardous waste onsite will be in compliance with California action-specific ARAR #79 (22 CCR 66262.34). In addition, containerization of hazardous waste will be in compliance with ARAR #84 (22 CCR, Div 4.5, Ch 14, Article 9), ARAR #85 (22 CCR, Div 4.5, Ch 14, Article 10) and for RCRA hazardous waste, ARAR #86 (22 CCR Div 4.5, Ch 14, Article 12).

3.1 Methods to Store Soil

Soil will be stored in 55-gallon drums/small containers, roll-off bins, and/or stockpiles. Soil that is classified as hazardous waste and placed in containers must comply with Title 22 CCR Div. 4.5, Chapter 15, Article 9 (container management), Article 27, Article 28 and Article 28.5 (air emission standards) as required by ARAR #79, and with 22 CCR Div. 4.5, Chapter 14, Article 9 (container management) as required by ARAR #84. A BMPs Plan for soil storage is included in Appendix C of this SMP, and is summarized in the subsections below. PG&E does not anticipate utilizing any remote locations for storage of hazardous waste. If hazardous waste is encountered, it will likely be stored at the Compressor Station and/or the Transwestern Bench.

3.1.1 Drums/Small Containers

Drums containing soils which are hazardous waste will be stored in a hazardous waste storage area at the Compressor Station and/or Transwestern Bench and disposed of within 90 days of generation. If needed, drums/small containers that contain soil that may be displaced in the vicinity of the groundwater remedy system that is non-hazardous, but unsuitable for final disposition onsite because contaminants are present above the interim screening level, will be staged for offsite transportation following these BMPs:

- Only DOT-specification containers will be used for soil accumulation.
- Empty drums will be inspected and inventoried upon arrival onsite for signs of contamination and/or deterioration.
- Drums and small containers will be transported to the temporary accumulation areas on wood pallets and will be secured together with non-metallic banding.
- Drums will be placed within a bermed and lined area or otherwise will be provided with secondary containment.
- Adequate aisle space (e.g., 36 inches) will be provided for containers such as 55-gallon drums to allow the unobstructed movement of personnel and equipment for inspection purposes. Drums will be placed with no more than two drums per row. The column length must fit within the lined, bermed area.
- Each drum will be provided with its own label, and labels will be visible for inspection purposes.

- Drums will remain closed except when removing or adding soil to the drum. Closed means that the lid and securing ring must be on and securely tightened.
- Drums containing hazardous waste will not be reused.

3.1.2 Stockpiles

Stockpile management procedures and practices will be implemented to reduce or eliminate pollution to the air and stormwater from materials that are stockpiled. Stockpile protection is required year-round. Any stockpiles will be stored in the staging area and outside of the roadway right-of-way. Stockpiles will be located a minimum of 50 feet away from any concentrated flow of stormwater, drainage courses, and inlets. During the rainy season, stockpiles will be covered and anchored down with gravel bags and/or sand bags.

RCRA and non-RCRA Hazardous Soil. Stockpiling of RCRA and non-RCRA hazardous waste/soil is not planned. It is anticipated that all soil that is above soil screening levels or project-specific cleanup goals (once established) will be placed in roll-off bins or similar containers.

If it is necessary to temporarily stockpile soil classified as RCRA or non-RCRA hazardous waste for up to 90 days to facilitate characterization or staging for offsite transportation, the liner will consist of a single sheet of material, or multiple sheets with seams that are sealed together. Hazardous waste stockpiles will use a minimum 20-mil liner if constructed on a foundation (e.g., pavement or compacted soil) or a 60-mil liner if constructed in a location without a foundation (e.g., unpaved, uncompacted soil). Stockpiled soil will not contain free liquids.

Stockpiles will be inspected by a California-registered professional engineer to verify conformance with these requirements. Temporary staging for up to 90 days prior to offsite transportation will not trigger compliance with ARAR #86 (requirements for waste piles that are applicable to RCRA hazardous waste). The contents of the stockpile, including the words “Hazardous Waste” and the accumulation start date, will be posted on a sign next to the stockpile, and the contents and accumulation start date will be entered in the field logbook. Stockpiles will be inspected on a weekly basis to verify that controls to prevent run-on, runoff, and windblown dispersal of soil are in place and effective. Security and emergency response equipment will be provided as described in Section 3.5. After the final volume of stockpiled soil has been removed, the area will be inspected for visual contamination due to stockpiling activities, and any remaining residual contaminated material will be removed.

Non-Hazardous Soil Above Interim Screening Levels or Project-Specific Cleanup Goals (once established). It is anticipated that all soil that is above soil screening levels or project-specific cleanup goals will not be stockpiled and will be placed in roll-off bins or similar containers. If it is necessary to temporarily stockpile displaced soil that is non-hazardous, but unsuitable for final disposition onsite because contaminants are present above the interim screening level, the following BMPs will be implemented:

- Stockpiles will be constructed with liner and perimeter berm to prevent release or infiltration of liquids. Minimum 20-mil polyethylene sheeting or equivalent will be used for liners.
- Wind erosion will be prevented by use of a cover, applying Soiltac® or a similar soil stabilization product, or other suitable means. If a cover is employed it will be minimum 6-mil polyethylene sheeting or equivalent.
- The perimeter berm will be constructed of clean materials (such as hay bales or straw wattle under the liner).
- If a cover is employed, it will extend over the outer edges of the perimeter berm and liner so that rainfall is prevented from entering the stockpile.
- Covers and perimeter berms will be secured in place when not in use and at the end of each workday and as necessary to prevent wind dispersion or run-off from precipitation events.
- Liquids that accumulate inside the berm will be pumped from the stockpile to a container or tank for characterization and disposal.
- If the stockpile is outside of a secured area, the stockpile will be demarcated with barricades, orange cones, and/or caution tape until the stockpiles are removed from the site.

- Erosion control measures will be employed to prevent stockpiled soil from contributing to surface runoff and wind-generated particulate matter as shown on Figure C-1.
- After the final volume of stockpiled soil has been removed, the area will be inspected for visual contamination due to stockpiling activities, and any remaining residual contaminated material will be removed.

Clean Soil. Stockpiles of displaced soil outside of Soil RFI/RI Investigation Areas that is non-hazardous, clean, and suitable for immediate reuse will be stored following these BMPs:

- Stockpiles will be constructed with liner and perimeter berm to prevent release or infiltration of liquids. Minimum 20-mil polyethylene sheeting or equivalent will be used for liners.
- Wind erosion will be prevented by use of a cover, applying Soiltac® or a similar soil stabilization product, or other suitable means. If a cover is employed it will be minimum 6-mil polyethylene sheeting or equivalent.
- The perimeter berm will be constructed of clean materials (such as hay bales or straw wattle under the liner).
- If a cover is employed, it will extend over the outer edges of the perimeter berm and liner so that rainfall is prevented from entering the stockpile.
- Covers and perimeter berms will be secured in place when not in use and at the end of each workday and as necessary to prevent wind dispersion or run-off from precipitation events.
- If the stockpile is outside of a secured area, the stockpile will be demarcated with barricades, orange cones, and/or caution tape until it is removed from the site.
- Erosion control measures will be employed to prevent stockpiled soil from contributing to surface runoff and wind-generated particulate matter as shown on Figure C-1.
- After the stockpile has been removed, all residual material will be removed from the underlying and surrounding areas.

3.1.3 Roll-off Bins

- All empty roll-off bins will be inspected upon arrival onsite. Any roll-off containers arriving with contents, residual contamination, or deterioration will be rejected. Existing damage (dings, significant paint scratches, broken wheels, etc.), if not significant enough to result in rejection, will be documented upon arrival of the bin using photos and written documentation.
- Roll-off bins will be provided with covers and disposable liners.
- Covers will be properly secured, except when adding or removing soil.
- Old labels will be removed, and each bin will be provided with its own label. Labels will be visible.
- Roll-off bins containing soils that are hazardous waste will be stored in a hazardous waste storage area and disposed of within 90 days of generation.
- Roll-off bins containing clean soil can be stored anywhere on PG&E property or at other properties that have granted permission to PG&E.
- Roll-off bins that contain displaced soil that is non-hazardous, but unsuitable for final disposition onsite because contaminants are present above the interim screening level will be stored at designated locations. The bins will be covered and inspected at a specified frequency (see Section 3.4 for inspection frequencies).

3.2 Hazardous Waste Soil Storage Time Limit

In compliance with 22 CCR 66262.34 (California action-specific ARAR #79), non-RCRA and RCRA hazardous wastes will be removed from the site within 90 days from date of generation. The date of generation is the day that a waste is first placed in a container (drum or roll-off bin) or stockpile. Accumulation start date for containers is

documented on the hazardous waste label. A log or other record will be used to document the accumulation start date for stockpiles.

3.3 Labeling

This section describes the labeling of waste containers.

3.3.1 Hazardous Waste Soil

Labeling for hazardous waste soil and soil pending characterization that could potentially be classified as hazardous will be in accordance with 22 CCR, Division 4.5, Chapter 12 (California action-specific ARAR #78) and 49 Code of Federal Regulations (CFR) 172, 173, and 178. Labels will include the type of waste, location from which the waste was generated, and accumulation start date. "Remediation Waste" will be written on the container with a paint pen, or on a blank label on the side of the container. Containers and roll-off bins used to store/accumulate hazardous waste will be labeled with a pre-printed "Hazardous Waste" label specific to California, with the following information:

- Accumulation start date
- Generator name, address, and phone number
- USEPA ID number
- Waste codes
- Description of waste, including hazardous properties and physical state
- DOT shipping description

Prior to transport, the manifest number will be added to each label. Soil pending characterization that could potentially be classified as hazardous will be labeled with the hazardous waste label described above, except that the waste codes and DOT shipping description will not be entered until the analytical results are received. An "Analysis Pending" or "Waste Material" label, which is a temporary or handwritten label, will be placed next to the hazardous waste label until analytical results are received and reviewed. This label will include generator information, type and location of waste, and the accumulation start date. The waste codes and DOT shipping description must be entered on the Hazardous Waste label, and the Analysis Pending label must be removed, within 10 days of receipt of the analytical results.

The appropriate DOT hazard class label will also be placed on the container prior to loading onto the transport vehicle.

3.3.2 Clean Soil/Non-Hazardous Soil

Containers and roll-off bins used to store/accumulate non-hazardous soil will be labeled as follows:

- Place a "Clean Soil" label on containers/roll-off bins containing soil determined to be suitable for onsite reuse. This is a handwritten label with the following information:
  - Material origin – Specific location of the site
  - Material description (e.g., soil, rock, etc.)
  - Date(s) of displacement or accumulation
  - Generating activity (e.g., drilling, excavation, etc.)
- Place a "Non-hazardous Soil for Offsite Disposal" label on containers/roll-off bins containing soil identified for off-site disposal. This is a handwritten label with the following information:
  - Material origin – Specific location of the site
  - Material description (e.g., soil, rock, etc.)
  - Date(s) of displacement or accumulation
  - Generating activity (e.g., drilling, excavation, etc.)
- Different color labels will be used to distinguish between "Non-Hazardous Clean Soil" and "Non-Hazardous Soil for Offsite Disposal."

3.4 Inspections

In compliance with 22 CCR 66264.15 (California action-specific ARAR #76), soil accumulation or storage areas for hazardous waste will be inspected at a frequency specified in the BMPs Plan (Appendix C) for malfunctions, deterioration, discharges, and leaks that could result in a release.

- Containers and roll-off containers will be inspected for proper closure, leaks, signs of corrosion, or signs of general deterioration, proper labeling, and accumulation time.
- Stockpiles will be inspected for liner, cover, and berm integrity and to check that controls for windborne dispersion and run-on and run-off control are functioning properly.
- Secondary containment structures will be inspected for integrity and accumulation of liquids.
- All areas will be inspected to ensure that good housekeeping practices are maintained.

Any deficiencies observed during inspection will be corrected upon discovery, and corrective measures will be documented. The employee inspecting the storage areas will be responsible for documenting the deficiency and implementing its remedy.

Appropriate measures may include transfer of waste from leaking container to new container, replacement of liner or cover, or repair of containment berm. Copies of inspection reports and corrective measures will be maintained onsite and will be available for review.

As part of BMPs, soil storage areas for displaced soil that has been classified as non-hazardous clean soil will be inspected on a monthly basis as specified in the BMPs Plan (Appendix C).

3.5 Security/Emergency Response

In compliance with 22 CCR 66264.14 (California action-specific ARAR #76), a barrier, such as temporary fencing, will be provided for hazardous waste accumulation areas. PG&E does not anticipate utilizing any remote locations for storage of hazardous waste. If hazardous waste is encountered, it will likely be stored at the Compressor Station and/or the Transwestern Bench.

Hazardous waste soil accumulation areas will also have signs that provide 24-hour emergency contacts and telephone numbers. Hazardous waste accumulation areas will contain emergency response equipment appropriate to applicable waste hazards. The project-specific HSPs will identify the project emergency response procedures and equipment, including emergency response contacts and phone numbers.

In addition to the project-specific HSP procedures, hazardous waste accumulation areas will be provided with fire extinguishers, decontamination equipment including an eye wash station, and an alarm system (if radio equipment is not available to all staff working in accumulation area).

SECTION 4

Waste Training, Profiling, Transportation, and Disposal

This section describes guidelines for waste management training, waste profiling, transportation for offsite disposal, and disposal of displaced soil that is classified as a hazardous or non-hazardous waste soil. The previously established practice at the site is that transportation within the plume boundary is considered to be onsite transportation. Consistent with this practice, transportation of soil within the project's APE is considered to be onsite transportation for purposes of complying with hazardous waste requirements.

4.1 Employee Training for Waste Soil Management

In compliance with 22 CCR 66264.16 (California action-specific ARAR #76), field personnel that will manage hazardous or potentially hazardous waste will obtain:

- Hazardous waste management training that meets the requirements of 22 CCR 66265.16, and that will address how to implement applicable provisions of the hazardous waste contingency plan and how to perform job duties related to hazardous waste management in a manner that complies with hazardous waste regulatory requirements. Each employer working at the site is responsible for providing this training to their employees. The specific content of this training will vary by employer and by job function.
- On-the-job training (as applicable to the job description), including:
  - Project-specific HSP review that requires each site worker and guests to review and sign the plan
  - Activity hazard analysis and daily "tailgate" meetings
  - Project-specific Work Plan review (e.g., this SMP)
  - DOT hazardous material training (49 CFR 172.704)

Training documentation will be maintained and will include the job title for each position involving hazardous waste soil management and the name of the person filling the job, written job description including skills and required qualifications, description of type and amount of continuing training given, and records that document training or job experience.

4.2 Hazardous Waste Profiling

As discussed in Section 2, displaced soil from in and near Soil RFI/RI Investigation Areas will be screened to assess whether it is hazardous using prior knowledge of the soil and sample analytical results. However, in some cases, offsite disposal facilities may require additional analyses to evaluate the soil waste stream prior to acceptance. The purpose of pre-disposal profiling of the hazardous waste soil identified for offsite disposal is to characterize the appropriate disposal method and location.

Ultimately, the profile of the waste must meet the acceptance criteria of the disposal facility and be in compliance with all pertinent federal, state, and local regulations. Characterization will be documented on a waste profile form provided by the offsite treatment or disposal facility as part of the waste acceptance process. An approved copy of the waste profile will be received prior to offsite transportation of the material.

4.3 Manifests/Shipping Documentation

In compliance with 22 CCR 66262.20 and 66262.22 (California action-specific ARAR #77), each load of soil classified as hazardous waste will be manifested prior to leaving the site. The hazardous waste manifest (USEPA Form 8700-22) is the shipping document for tracking shipments of hazardous waste from the site to the final disposal facility. Note that each load of non-hazardous waste will be accompanied by a properly completed non-hazardous waste manifest form or bill of lading.

Additionally, each shipment of waste soil will also have a haul ticket. If the signed hazardous waste manifest from the designated offsite facility is not received within 35 days, PG&E will contact the transporter or the designated facility to determine the status of the waste. All communications will be documented. If the signed hazardous waste manifest has not been received within 45 days, PG&E will prepare an Exception Report and submit it to the State of California, as required under 22 CCR 66262.42.

4.4 Department of Transportation (DOT) Requirements

Requirements under 49 CFR 171-178 (DOT) and 22 CCR 66262.30 through 66262.33 (California action-specific ARAR #78) and the CD (DOI 2013) will apply to all offsite shipments of soil that is classified as hazardous waste. These requirements do not apply to shipments of non-hazardous waste. The information contained in this section is provided as a general guide. Requirements specific to each hazardous waste will be determined in the field. It is the responsibility of a DOT-trained individual to ensure that the requirements of 49 CFR 171-178 are met.

4.4.1 Shipping Name

Each shipment will be properly classified using the Hazardous Materials Table in 49 CFR 172.101. All determinations will be made by DOT-trained personnel.

4.4.2 Packaging, Marking, and Labeling

The shipping name, hazard class, identification number, technical names (if applicable), USEPA markings and waste code numbers, and consignee/consignor designations will be marked on packages for shipment (49 CFR 172.301). Once a waste is characterized, reference will be made to the Hazardous Materials Table in 49 CFR 172.101 to determine the appropriate label.

4.4.3 Placards

Appropriate placards will be determined by DOT-trained personnel. Specific placard descriptions are found starting at 49 CFR 172.521. If a placard is required, it will be affixed on each side and each end of the vehicle. It is the shipper's responsibility to provide the proper placards for their shipment if the transporter does not have them.

4.5 California and Arizona Transportation Requirements

California hazardous waste regulations (22 CCR Division 4.5, Chapter 13) require that anyone engaged in the transportation of hazardous waste within California must possess a valid hazardous waste hauler registration issued by DTSC. Transporters operating in Arizona must also be registered with the Arizona Department of Environmental Quality. Transporters operating in Nevada must also hold a permit and certificate of registration issued by the Nevada Department of Environmental Protection.

4.6 Transporter Requirements

Each transportation vehicle and load of hazardous waste will be inspected before leaving the site and will be documented. A PG&E representative will verify that the driver has the appropriate class of driver's license with appropriate endorsements for the class of vehicle being driven before loading hazardous waste onto the vehicle. The quantities of hazardous waste leaving the site will be recorded on a transportation and disposal log. The transporter must be registered with DTSC as a hazardous waste hauler, have a USEPA Identification number, and must comply with transportation requirements outlined in 49 CFR 171-179 (DOT) and 22 CCR 66262.33 (California action-specific ARAR #78).

The transporter will be responsible for ensuring that loaded trucks comply with all applicable weight limits. For each load of material, weight measurements will be obtained for each full and empty container and dump truck. Disposal quantities will be based on the difference of weight measurements between the full and empty container or dump truck. Weights will be recorded on the waste manifest and weight ticket by the disposal facility.

The transporter will observe the following practices when hauling and transporting hazardous waste (and non-hazardous waste) offsite:

- Minimize impacts to general public traffic.
- Trucks/trailers and roll-off bins used for hauling hazardous or regulated waste will be lined and covered with a tarp or ridged closure before transport to comply with EIR mitigation measure HAZ-2f and to prevent spills or releases.
- Decontaminate exterior of vehicle using dry methods as necessary prior to leaving the site.
- Wastes or materials from other projects may not be combined with wastes generated during this project.
- All personnel involved in offsite disposal activities will follow safety and spill response procedures outlined in project-specific HSPs.

4.7 Spill Reporting

In the event of a spill or release of hazardous (or non-hazardous) waste, the transporter must immediately notify a PG&E representative**.** The following information about the spill will be reported and recorded:

- Type of material (for example, soil) and contaminant
- Location
- Estimated volume
- Media affected (for example, spilled on concrete pad or soil)
- Time of spill/release
- Final disposition of spilled material

The transporter will also report any spill or release of hazardous waste, as required by 49 CFR 171.15, to the National Response Center at 800/424-8802 or 202/426-2675. The transporter will also report, in writing, as required by 49 CFR 171.16, to the Director, Office of Hazardous Materials Regulations, Materials Transportation Bureau, Department of Transportation, Washington D.C. 20590.

4.8 Spill Response

The transporter will clean up any spill or release of hazardous (or non-hazardous) waste (including soil) that occurs during transportation or will take such action as may be required or approved by federal, state, or local officials. Spilled waste will be immediately cleaned up, including soils on the outside of the trucks, the truck and/or container, or road surface. Where appropriate, the spilled material will be returned to the original waste container. Regardless, the spilled material will be properly contained and disposed.

4.9 Waste Disposal

Soil classified as RCRA or non-RCRA hazardous waste, and non-hazardous soil will be disposed of at an appropriately permitted facility. In accordance with the requirements of the CD (DOI 2013), prior to the first shipment of waste material offsite, and annually thereafter, PG&E will demonstrate to DOI's satisfaction that USEPA has determined that the proposed receiving facility is operating in compliance with 42 U.S.C. § 9621(d)(3) and 40 CFR § 300.440. If PG&E knows or has reason to know the facility no longer meets the criteria of 40 CFR § 300.440(b), PG&E will inform DOI, propose an alternate receiving facility prior to any subsequent shipments, and demonstrate to DOI's satisfaction that USEPA has determined that the alternate receiving facility is operating in compliance with 42 U.S.C. § 9621(d)(3) and 40 CFR § 300.440. The waste material will be stored onsite in accordance with this waste management plan until approval is received and the waste material is transported offsite. If the waste management facility is out-of-state, prior to the first shipment of waste material, PG&E will provide written notice for disposal of waste material at the listed facilities to the appropriate state environmental official in each receiving facility's state and the DOI Project Manager, and will comply with state law with regard to providing any further notifications. Additionally, PG&E will notify the state environmental official referenced

above and the DOI Project Manager of any major changes in the shipment plan, such as a decision to ship the waste material to a different out-of-state facility.

SECTION 5

Recordkeeping

California action-specific ARAR #80 (22 CCR 66262.40) requires that hazardous waste manifests, biennial reports, exception reports, and waste analysis and waste determination records be retained for three years. Further, 22 CCR 66262.41 requires large quantity generators of RCRA hazardous waste to submit a biennial report to USEPA by March 1 of each even-numbered year that describes hazardous waste generated in the previous odd-numbered year. In addition, the CD (DOI 2013) requires that project-related records be retained until 10 years after receipt of the Certificate of Completion. The following records and documents will be maintained for the hazardous waste:

- Transportation and offsite disposal records, including:
  - Profiles and associated characterization data
  - Manifests, Land Disposal Restriction (LDR) notifications/certifications, bills of lading, and weight tickets
  - Offsite facility waste receipts, certificates of disposal/destruction/recycle
  - Trucking logs
- Training records
- Inspection records

In addition, in accordance with the *Revised Management Protocol for Handling and Disposition of Displaced Site Material* (Appendix B), PG&E will maintain a Displaced Material Inventory for all displaced soil, which will include:

- Material origin – Specific location of the site.
- Material description (e.g., soil, rock, etc.).
- Date(s) of displacement or accumulation.
- Generating activity (e.g., drilling, excavation, etc.).
- Approximate volume of material stored.
- Short-term storage mode and location – Type of storage (including container identification number, as applicable) and location of short-term storage pending soil characterization. In some cases, this information may need to be updated as containers are moved between areas of the site.
- Characterization status – Characterization sample information (e.g., date of submittal and laboratory used), date of receipt of results, and the contamination assessment based on comparison to screening criteria (as discussed in Section 2.3).
- Storage mode and location – Type of storage (including container identification number, as applicable) and location of storage pending decision regarding final disposition. This information may need to be updated as containers are moved between areas of the site.
- Final disposition information – Indication of the onsite or offsite final disposition action identified through discussion with the Tribe(s), Agencies, and the affected land owner(s), as appropriate, based on review of material type and the contamination assessment.

SECTION 6

Soil Management Plan Updates

PG&E developed this SMP based on the final design for the groundwater remedy, current understanding of historical site activities, and available soil data. This final SMP is submitted with the final design documents. An addendum to the SMP will be prepared to update the screening levels for non-hazardous soil after the project specific cleanup goals are established and during future O&M activities, as warranted. A data report will be prepared after the implementation of the baseline soil sampling to document sampling results and refine soil classification volumes.

In addition, as the soil RFI/RI program advances through the RCRA/CERCLA processes, PG&E will also obtain a better understanding of existing soil conditions across the site by collecting additional analytical data, performing a risk assessment, and (if necessary) developing a Corrective Measures Study/Feasibility Study (CMS/FS) for soil. The CMS/FS will develop project-specific goals and propose appropriate soil remedy(ies). In addition, screening levels included in Tables 2.4-1 and 2.4-2 will be updated as regulations change and project-specific decisions are made. PG&E will review all such new relevant information as it becomes available, incorporate it into future addendum to this SMP as appropriate, and submit the addendum to the regulatory agencies for review and approval.

SECTION 7

References

Alisto, Arcadis, CH2M HILL, NES, and Turnkey. 2009. *Work Plan for Time-Critical Removal Action at AOC 4, Pacific Gas and Electric Company Topock Compressor Station, Needles, California.* December.

ARCADIS. 2008. *Technical Memorandum 3: Ecological Comparison Values for Metals and Polycyclic Aromatic Hydrocarbons in Soil.* May 28. Provided as Appendix D.

California Department of Toxic Substances Control (DTSC). 2011. *Final Environmental Impact Report for the Topock Compressor Station Groundwater Remediation Project*. January.

California Department of Toxic Substances Control Human and Ecological Risk Office. 2015. *Human Health Risk Assessment Note 3-DTSC-Modified Screening Levels*. May.

CH2M HILL. 2006. *Draft RCRA Facility Investigation/Remedial Investigation Soil Investigation Work Plan Part A, PG&E Topock Compressor Station, Needles, California*. November.

_____. 2007a. *Revised Final RFI/RI Volume 1, PG&E Topock Compressor Station, Needles, California*. August 10.

_____. 2007b. *Draft RCRA Facility Investigation Soil Investigation Work Plan Part B, PG&E Topock Compressor Station, Needles, California*. December.

_____. 2009a. *Revised Final RCRA Facility Investigation/Remedial Investigation, Volume 2— Hydrogeologic Characterization and Results of Groundwater and Surface Water Investigation Report, Pacific Gas and Electric Company (PG&E), Topock Compressor Station, Needles, California.* February 11.

_____. 2009b. *Final RCRA Facility Investigation/Remedial Investigation Report, Volume 2 Addendum— Hydrogeologic Characterization and Results of Groundwater and Surface Water Investigation, Pacific Gas and Electric Company, Topock Compressor Station, Needles, California*. June 29.

_____. 2009c. *Final Soil Background Investigation at Pacific Gas and Electric Company Topock Compressor Station, Needles, California*. May.

_____. 2011a. *Draft Soil RCRA Facility Investigation/Remedial Investigation Work Plan, PG&E Topock Compressor Station, Needles, California*. May 10.

_____. 2011b. *Soil Investigation Part A Phase 1 Data Gaps Evaluation Report, PG&E Topock Compressor Station, Needles, California.* (Appendix A of the *Draft Soil RCRA Facility Investigation/Remedial Investigation Work Plan* [CH2M HILL 2011a]). May 6.

_____. 2013. *Revised Final Soil RCRA Facility Investigation/Remedial Investigation Work Plan, Pacific Gas and Electric Company, Topock Compressor Station*, *Needles, California.* January 14.

_____. 2014. *Addendum to the Revised Final RCRA Facility Investigation and Remedial Investigation Report, Volume 1 – Site Background and History, Topock Compressor Station, Needles, California.* May.

_____. 2015. *Construction/Remedial Action Work Plan for the Final Groundwater Remedy, PG&E Topock Compressor Station, Needles, California.* November 18.

Pacific Gas and Electric Company (PG&E). 2015. *Revised Management Protocol for Handling and Disposition of Displaced Site Material, Topock Remediation Project, Needles, California*. Presented as Appendix B. November.

U.S. Department of the Interior (DOI). 2010. *Groundwater Record of Decision, Pacific Gas and Electric Company, Topock Compressor Station, Needles, San Bernardino County, California*. ROD cover date is December 2010; signed/approved by DOI on January 20, 2011

_____. 2013. Remedial Action/Remedial Design Consent Decree (CD) between the United States of America and Pacific Gas & Electric Company. Case 5:13-cv-00074-BRO-OP, Document 23. Entered November 21.

Appendix A
Groundwater Remedy Implementation—
Baseline Soil Sampling and Analysis Plan

Groundwater Remedy Implementation—Baseline Soil Sampling and Analysis Plan, Pacific Gas and Electric Company, Topock Compressor Station, Needles, California

1.0 Introduction

Pacific Gas and Electric Company (PG&E) is implementing the selected groundwater remedy of chromium at the Topock Compressor Station (Compressor Station) in Needles, San Bernardino County, California. The selected remedy consists of the following five primary components:

- In-Situ Reactive Zone (IRZ)
- Inner Recirculation Loop
- Freshwater Injection System
- Institutional Controls (ICs)
- Monitored Natural Attenuation (MNA)

Three components for the groundwater remedy system—IRZ, Inner Recirculation Loop, and Freshwater Injection System—involve construction and installation of infrastructure such as pipelines, pipe trenches, buildings, tanks, electrical equipment, and remediation/monitoring wells, and are the focus of this Sampling and Analysis Plan (SAP).

To document baseline soil conditions prior to groundwater remedy implementation, this SAP has been developed to provide the approach and methods to collect and analyze soil samples in the areas used by the groundwater remedy. In addition, the SAP also includes the collection of data to assist with the management of materials displaced during construction activities, in accordance with the *Revised Management Protocol for Handling and Disposition of Displaced Site Material, Topock Remediation Project, Needles, California* (PG&E 2015) (Appendix B of the Soil Management Plan [SMP]) that was developed by a subgroup consisting of representatives from PG&E, Agencies, Interested Tribes, and other stakeholders. As discussed in Section 2.5 of the Soil Management Plan, the management protocol excludes the provision for long-term storage of soil above the interim screening levels. The process for assessing the baseline data for management of displaced materials is described in the main text of the SMP.

In areas where groundwater remedy infrastructure is within 20 feet of or overlaps with Soil Investigation Areas, the approach presented in this SAP has been fully coordinated with the current RCRA Facility Investigation/ Remedial Investigation (RFI/RI) (CH2M HILL 2013) planning activities to minimize the total number of soil samples to be collected and associated ground disturbances, as well as to ensure consistency between the groundwater and soil programs at Topock. Figures A-1, A-1A, A-2, and A-3 show these overlapping areas (or areas within 20 feet) (tables and figures are presented at the end of this appendix). As shown, remedy infrastructure proposed at the final design stage (i.e., excluding future provisional wells) is within 20 feet of or overlaps with the following twenty-four Soil Investigation Areas:

- SWMU 1 – Former Percolation Bed
- SWMU 5 – Sludge Drying Beds
- SWMU 6 – Chromium Reduction Tank
- SWMU 9 – Transfer Sump
- AOC 1 – Area Around Former Percolation Bed
- AOC 4 - Debris Ravine
- AOC 7 – Hazardous Materials Storage Area
- AOC 8 – Paint Locker
- AOC 9 – Southeast Fence Line (Outside Visitor Parking Area)
- AOC 10 – East Ravine

- AOC 11 – Topographic Low Areas
- AOC 12 – Fill Areas
- AOC 13 – Unpaved Areas within the Compressor Station
- AOC 17 – Onsite Septic System
- AOC 18 – Combined Hazardous Waste Transference Pipelines
- AOC 21 – Round Area by Sludge Drying Beds
- AOC 22 – Unidentified Three-sided Structure
- AOC 27 – MW-24 Bench
- AOC 28 – Pipeline Drip Legs
- AOC 30 – MW 20 Bench
- AOC 33 – Potential Former Burn Area near AOC 17
- Unit 4.3 – Oil/Water Holding Tank
- Perimeter Area outside of but adjacent to the Compressor Station fence line
- Storm Drain System

The following sections discuss the sampling and analytical approach (Section 2); sampling methods, sample management, and shipping (Section 3); procedures for waste management and decontamination (Section 4); data management and reporting (Section 5); references (Section 6); and certification (Section 7). The final SAP has a professional stamp by Keith Sheets, CH2M HILL's supervising California-registered Professional Geologist.

2.0 Sampling and Analytical Approach

Baseline soil samples will be collected along the remedy pipelines/conduits alignments, which include direct burial pipelines/conduits, pipeline trenches, and the remediation wells (i.e., injection and extraction wells) that are connected to those pipelines, as well as at the new remedy monitoring well locations. The exception is that baseline soil sampling will not occur along the alignment of the freshwater pipeline in Arizona, and on the California side, leading to the Compressor Station. The freshwater pipeline will contain groundwater pumped from water supply well(s) installed on the Havasu National Wildlife Refuge (HNWR) in Arizona, near the Topock Marsh. Because inorganic compounds are present in the fresh water at such low concentrations, soil underlying the pipeline would not be adversely impacted by inorganic compounds from incidental releases, spills or leaks from the pipeline. All other remedy pipeline alignments will be part of the baseline sampling plan and will follow the sampling guidelines provided below and presented in Figure A-4 .

Baseline soil samples will also be collected at locations of remedy structures/buildings following the sampling guidelines below and presented in Figure A-5.

Where practicable, proposed sample locations are located near existing roads or in other disturbed areas to minimize the potential for impacts to sensitive resources (cultural, historical, and/or biological). Access routes used to collect baseline soil samples are expected to be the same routes used to construct and install the remedy infrastructure. Qualified biologists and cultural resource consultants will be consulted during the selection of final sampling locations.

2.1 Pipeline Alignment (including Connecting Remediation Wells)

The remedy pipeline/conduit alignments will be installed both above and below ground. To assess baseline conditions along the pipeline/conduit alignments, soil samples will be collected approximately every 500 linear feet along the proposed pipeline/conduit runs. If pipelines/conduits are aboveground, baseline soil samples will be collected at 0.5 foot below ground surface (bgs). If pipelines/conduits alignments are underground, then soil samples will be collected at the bottom of the trench if the pipelines/conduit alignments are outside Soil RFI/RI Investigation areas. Except as noted below, if the pipelines/conduit alignments are in or within 20 feet of Soil RFI/RI Investigation Areas, a soil sample will be collected at 1 foot bgs and at the bottom of the trench to assess conditions for management of disturbed soil.

Proposed remedy pipelines/conduits alignments intersect twenty-four Soil RFI/RI Investigation Areas as shown on Figures A-1 and A-1A. These investigation areas are currently undergoing investigations under the Soil RFI/RI program:

- SWMU 1 – Former Percolation Bed
- SWMU 5 – Sludge Drying Beds
- SWMU 6 – Chromium Reduction Tank
- SWMU 9 – Transfer Sump
- AOC 1 – Area Around Former Percolation Bed
- AOC 4 – Debris Ravine
- AOC 7 – Hazardous Materials Storage Area
- AOC 8 – Paint Locker
- AOC 9 – Southeast Fence Line (Outside Visitor Parking Area)
- AOC 10 – East Ravine
- AOC 11 – Topographic Low Areas, including the two new areas
- AOC 12 – Fill Areas
- AOC 13 – Unpaved Areas within the Compressor Station
- AOC 17 – Onsite Septic System
- AOC 18 – Combined Hazardous Waste Transference Pipelines
- AOC 21 – Round Area by Sludge Drying Beds
- AOC 22 – Unidentified Three-sided Structure (in upper yard)
- AOC 27 – MW-24 Bench
- AOC 28 –Pipeline Drip Legs
- AOC 30 – MW 20 Bench
- AOC 33 – Burn Area near AOC 17
- Unit 4.3 – Oil/Water Holding Tank
- Perimeter Area
- Storm Drain System

As part of the Soil RFI/RI, soil samples will be collected from several samples locations within these seventeen areas. To minimize disturbance and potential impacts to sensitive resources, baseline soil samples will not be collected along a pipeline segment if soil RFI/RI Investigation proposed sample locations and/or existing soil data locations are located within 20 feet of the pipeline/conduit run and meet the criteria of the baseline sample program. Proposed Soil RFI/RI sample locations and existing soil data locations pertinent to this baseline sampling plan are shown in Figures A-1 and A-1A. Figure A-4 shows the decision process that will be used to collect baseline soil samples along the pipelines/conduits.

Baseline soil samples will be analyzed for PAHs, sodium, and Title 22 metals in order to assess potential affects to soil associated with the operation of the groundwater remedy and to provide pre-characterization information prior to remedy construction. Title 22 metals is standard testing methodology for assessment of metals, and includes certain metals that are generally of concern at the Topock Compressor Station. If a baseline soil sample location is within 20 feet of a Soil RFI/RI Investigation Area, the sample will also be analyzed for the Soil RFI/RI Investigation Area analytical suite as presented in Table A-1.

2.2 Remedy Structures

A number of remedy structures are proposed to be constructed to support the groundwater remedy system. A majority of the proposed structures will be within the Compressor Station fence line, the Transwestern Bench, and the MW-20 Bench as shown in Figures A-1 and A-1A. There are a few miscellaneous structures that will also require baseline sampling, including well vaults and soil storage areas as well as the satellite maintenance and storage yard at Moabi Regional Park. The following is a list of key remedy structures; these structures are also shown in Figures A-1, A-1A, and A-2:

- **Structures Located Inside the Compressor Station**
  - Remedy-Produced Water Conditioning Plant
  - Conditioned Water Storage Tanks and Secondary Containment
  - Influent Water Storage Tanks and Secondary Containment
  - Freshwater Storage Tank
  - Decontamination Pad (occupies the same footprint as the Contingent Freshwater Pre-injection Treatment Building)
  - Contingent Storage Tanks associated with the Contingent Freshwater Pre-injection Treatment System
- **Structures Located at the Transwestern Bench**
  - Operation Building
- **Structures Located at the MW-20 Bench**
  - Carbon Amendment Building
  - Carbon Storage Tank
- **Other Remedy Structures**
  - Well Vaults
  - Soil Storage/Processing at Moabi Regional Park
  - Long term remedy support area at Moabi Regional Park (this area will also be used as the main construction yard during remedy construction)

To assess baseline conditions in areas where remedy structures will be constructed, soil samples will be collected on a 50-foot grid, or a minimum of one sample location within each remedy structure footprint. Soil samples will be collected at 0.5 foot below the proposed remedy structure. If the remedy structure is being constructed over an existing structure footprint, baseline soil samples will be collected only if the former structure's foundation is being removed and exposing underlying soil. Surface soil samples (0.5 foot below the ground surface) will be collected on a 100-foot grid in the soil storage areas and the satellite maintenance and storage yard at Moabi Regional Park.

The currently proposed remedy structures are located within 20 feet of or overlap six Soil RFI/RI Investigation Areas. These Soil RFI/RI Investigation Areas and their associated analytical suites are included in Table A-1 and are currently undergoing investigations under the Soil RFI/RI program:

- AOC 7 – Hazardous Materials Storage Area
- AOC 8 – Paint Locker
- AOC 11 – Topographic Low Areas, including the two new areas
- AOC 13 – Unpaved Areas within the Compressor Station
- AOC 17 – Onsite Septic System
- AOC 30 – MW 20 Bench

As part of the Soil RFI/RI, soil samples will be collected from several sample locations within these six Soil RFI/RI areas. To minimize disturbance and impacts to sensitive resources, baseline soil samples will not be collected within the remedy structure footprint if soil RFI/RI Investigation proposed sample locations and/or existing soil data points are located within the proposed structure footprint or within 20 feet of the footprint and meet the criteria of the baseline sample program. Figure A-5 shows the decision process that will be used to collect baseline soil samples within remedy structure footprints.

Baseline soil samples will be analyzed for Title 22 metals, PAHs, and sodium. Except as noted below, if the baseline soil sample location is within 20 feet of or overlaps a Soil RFI/RI Investigation Area, the sample will also be analyzed for the same analytical suite for that Soil RFI/RI Investigation Area as presented in Table A-1.

In addition, select baseline sample locations will be used to collect geotechnical data to support the groundwater remedy design. The areas where geotechnical samples will be collected have been identified and are included in the Final Basis of Design Report, Appendix C.

2.3 New Monitoring Well Locations

A number of new monitoring wells are proposed to be installed to support the groundwater remedy system. To assess baseline conditions in areas where the monitoring wells will be installed, one soil sample will be collected at each new monitoring well location at 1.0 feet bgs. Baseline soil samples will be analyzed for Title 22 metals and sodium. If the baseline soil sample location is within 20 feet of or overlaps a Soil RFI/RI Investigation Area, the sample will also be analyzed for the same analytical suite for that Soil RFI/RI Investigation Area as presented in Table A-1.

The new monitoring well locations intersect nine Soil RFI/RI Investigation Areas:

- AOC 1 – Area Around Former Percolation Bed
- AOC 10 – East Ravine
- AOC 11 – Topographic Low Areas, including the two new areas
- AOC 12 – Fill Areas
- AOC 13 – Unpaved Areas within the Compressor Station
- AOC 27 – MW-24 Bench
- AOC 28 – Pipeline Drip Legs
- AOC 30 – MW 20 Bench
- Perimeter Area

3.0 Sampling Methods, Sample Management, and Shipping

For consistency between the groundwater remedy and the Soil RFI/RI program, soil sample collection and handling activities will follow the standard operating procedures (SOPs) included in the Revised Final Soil RFI/RI Work Plan. Those SOPs are also included in Attachment 1 of this SAP. Sample containers, preservation, and hold times are summarized in Table A-1A.

3.1 Sample Management and Storage

Samples will be placed immediately into field coolers with ice; VOC and TPH-gasoline containers will be arranged in the sample cooler standing upright. The field coolers will be taken to the sample management area, where the samples will be transferred into a refrigerator and/or freezer. If transport of a sample to the laboratory is scheduled for a pickup more than 24 hours after sampling, samples will be stored in the freezer.

3.2 Shipping

Samples collected for chemical analysis will be transported to the laboratory via courier, generally daily. Chains-of-custody will accompany all samples to the laboratory.

4.0 Waste Management and Decontamination

The approach for investigation-derived waste (IDW) management and equipment decontamination is presented in the following subsections.

4.1 Equipment Decontamination

If used for sample collected, the downhole drilling tools, tracks on track rigs, and the back ends of the drilling rigs will be decontaminated prior to arrival at the site and will be cleaned between investigation areas as determined necessary by the field team leader. In addition, a visual inspection will be conducted between boring locations to determine if decontamination is necessary. Decontamination will be accomplished by steam-cleaning or pressure washing the core barrel, drill stem, drive casing, and back of the drilling rig. Equipment may also be cleaned using dry methods prior to leaving an excavation area to prevent the tracking of material out of the area. The backs of drill rigs and down-hole drilling tools will be decontaminated before arrival at the site.

Steam-cleaning or pressure washing will be conducted on the decontamination pad located at the Transwestern Bench. Rinseate from the decontamination operation will be collected on the containment pad and will be transferred to the cuttings bin/drum or portable storage tank. Rinseate will be processed at the IM-3 treatment

plant, the new remedy-produced water conditioning plant, or transported to a PG&E-contracted offsite disposal facility.

4.2 Investigation-derived Waste Management

Several types of waste materials will be generated during the drilling and sampling of soil borings, excavation of potholes, and hand excavation for utility clearance. IDW materials that will be generated include drill cuttings, incidental trash, equipment decontamination water, and possibly small quantities of soil from pothole or hand excavation areas. The IDW will be handled in accordance with the *Revised Management Protocol for Handling and Disposition of Displaced Site Material, Topock Remediation Project, Needles, California* (Soil Management Plan Appendix B).

Drill cuttings include fragments of rock and soil that are removed to create the borehole. The cuttings will be contained in drums or lined roll-off bins at staging areas during drilling and sampling activities. After sampling and characterization, drums and bins will be removed from the staging areas. If cuttings or soil are free from contaminants (below interim screening levels presented in Table A-2), material will be designated appropriate for reuse on site. Cuttings and any soil from excavation areas that exceed the hazardous waste characteristic levels presented in Table A-3 will be considered contaminated and transported to a permitted offsite disposal facility. Cuttings and any soil from excavation areas that are below hazardous waste characteristic levels, but above interim screening levels, will be managed following protocols prescribed in this Soil Management Plan.

Water generated during equipment decontamination will be collected in bins or portable storage tanks temporarily located in staging areas near the drilling sites or at the Compressor Station as needed. Secondary containment will be set up at the drilling area for the portable storage tanks or bins. Rinseate will be processed at the IM No. 3 treatment plant, the new remedy-produced water conditioning plant, or transported to a PG&E-contracted offsite disposal facility.

Incidental trash will be collected at the end of each drilling shift and will be disposed of properly.

5.0 Data Management and Reporting

The electronic data will be used to generate validation reports, data summary tables, and figures. Management of data generated from baseline soil sampling will be conducted in a manner that is consistent with the Soil RFI/RI program.

5.1 Data Validation

Data validation will be carried out when the data packages are received from the laboratory. It will be performed on an analytical batch basis using the summary results of calibration and laboratory quality control, as well as those of the associated field samples. Data packages will be reviewed for all analytes. Raw data will be reviewed when deemed necessary. Data validation procedures will include:

- Review of the data package for completeness.
- Review of chain-of-custody records for discrepancies that might degrade data quality.
- Review for compliance with holding time and quality control frequency requirements.
- Evaluation of all calibration and quality control summary results against the project requirements.
- Verification of analyte identification and calculations for at least 10 percent of the data.
- Qualification of the data using appropriate qualifier flags, as necessary, to reflect data usability limitations.
- Initiation of corrective actions, as necessary, based on the data review findings.

Data validation procedures follow the United States Environmental Protection Agency (USEPA) *Contract Laboratory National Functional Guidelines for Inorganic Data Review* (USEPA 2002) and *Contract Laboratory National Functional Guidelines for Organic Data Review* (USEPA 1999), substituting the qualifiers, the calibration and quality control requirements specified in the *PG&E Program Quality Assurance Project Plan, Revision 2* (CH2M HILL 2012), the Addendum to the QAPP, Revision 2 (CH2M HILL 2015), and the *PG&E Program Quality Assurance Project Plan for Dioxins and Furans* (CH2M HILL 2010).

5.2 Reporting

PG&E will present the results of the baseline soil sampling in a data report, summarizing the sampling event and analysis results. The data report will consist of a discussion of the sampling, laboratory analytical results, a discussion of uncertainties in the data, and a discussion of the implications on management of displaced soil, especially storage of soil. Field documentation, summary tables of laboratory results, and laboratory analytical data sheets will be included as attachments or appendices to the report.

6.0 References

California Department of Toxic Substances Control's Human and Ecological Office (HERO). 2015. *Human Health Risk Note 3–DTSC-Modified Screening Levels*. May.

CH2M HILL. 2005. *Sampling, Analysis, and Field Procedures Manual, PG&E Topock Program*. March 31.

_____. 2009. *Final Soil Background Investigation at Pacific Gas and Electric Company Topock Compressor Station, Needles, California*. May.

_____. 2010. *PG&E Program Quality Assurance Project Plan for Dioxins and Furans*. January.

_____. 2012. *PG&E Program Quality Assurance Project Plan, Revision 2, Topock Compressor Station, Needles, California*. August.

_____. 2013. *Revised Final Soil RFI/RI Work Plan, Pacific Gas and Electric Company, Topock Compressor Station, Needles, California.* January.

_____. 2015. *Addendum to PG&E Program Quality Assurance Plan, Revision 2, for the RCRA Facility Investigation/Remedial Investigation, Topock Compressor Station, Needles, California*. November.

Pacific Gas and Electric Company (PG&E). 2015. *Revised Management Protocol for Handling and Disposition of Displaced Site Material, Topock Remediation Project, Needles, California*. Presented as Appendix B of the Soil Management Plan. November

United States Environmental Protection Agency (USEPA). 1999. *Contract Laboratory National Functional Guidelines for Organic Data Review*.

_____. 2002. *Contract Laboratory National Functional Guidelines for Inorganic Data Review.*

7.0 Certification

This report was prepared by CH2M HILL under the supervision of the professional whose seal and signature appears herein, in accordance with currently accepted professional practices; no warranty, expressed or implied, is made.

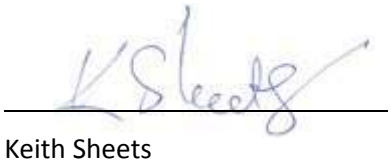

Keith Sheets
California Professional Geologist, PG No. 6888

Tables

TABLE A-1

List of RFI/RI Investigation Areas within 20 feet of or that Overlap with Groundwater Remedy Infrastructure and Proposed Analyte Suite

Groundwater Remedy Implementation - Baseline Soil Sampling and Analysis Plan
Pacific Gas and Electric Company, Topock Compressor Station, Needles, California

Soil RFI/RI Investigation Area	Analytical Suite[1]
SWMU 1 – Former Percolation Bed	Title 22 metals, hexavalent chromium, VOCs. SVOCs, PAHs, TPH, pH, pesticides, PCBs[2]
SWMU 5 – Sludge Drying Beds	Title 22 metals, hexavalent chromium, VOCs, TPH, SVOCs, and PAHs
SWMU 6 – Chromium Reduction Tank	Title 22 metals, hexavalent chromium, VOCs, TPH, SVOCs, and PAHs
SWMU 9 – Transfer Sump	Title 22 metals, hexavalent chromium, VOCs, TPH, SVOCs, and PAHs
AOC 1 - Area Around Former Percolation Bed	Title 22 metals, hexavalent chromium, PAHs, pH, PCBs[2], and dioxins and furans
AOC 4 – Debris Ravine	Title 22 metals, PAHs, PCBs, and dioxins/furans
AOC 7 - Hazardous Materials Storage Area	Title 22 metals, hexavalent chromium, VOCs, SVOCs, PAHs, PCBs, TPH, and pH
AOC 8 – Paint Locker	Title 22 metals, VOCs, and TPH
AOC 10 – East Ravine	Title 22 metals, hexavalent chromium, PAHs, Asbestos, dioxins and furans
AOC 9 – Southeast Fence Line (Outside Visitor Parking Area)	Hexavalent chromium, Title 22, PAHs, PCBs, and pesticides
AOC 11 - Topographic Low Areas	Title 22 metals, hexavalent chromium, TPH, SVOCs, PAHs, and PCBs
AOC 12 - Fill Areas	Title 22 metals, hexavalent chromium, VOCs, TPH, PAHs, pH, asbestos, pesticides, and PCBs
AOC 13 - Unpaved Areas within the Compressor Station	Title 22 metals, hexavalent chromium, VOCs, TPH, SVOCs, PAHs, PCBs, and asbestos
AOC 17 - Onsite Septic System	Title 22 metals, hexavalent chromium, VOCs, TPH, SVOCs, and PAHs
AOC 18 – Combined Hazardous Waste Transference Pipelines	Title 22 metals, hexavalent chromium, pH, VOCs, TPH, SVOCs, PCBs, and PAHs
AOC 21 – Round Area by Sludge Drying Beds	Title 22 metals, hexavalent chromium, calcium, sodium, and pH
AOC 22 - Unidentified Three-sided Structure	Title 22 metals, hexavalent chromium, pH, VOCs, TPH, SVOCs, PCBs, and PAHs
AOC 27 – MW-24 Bench	Title 22 metals, hexavalent chromium, pH, VOCs, TPH, SVOCs, PCBs, pesticides, PAHs, and dioxins and furans
AOC 28 - Pipeline Drip Leg	TPH, PAHs, and PCBs
AOC 30 - MW 20 Bench	Title 22 metals, hexavalent chromium, sodium, and chloride
AOC 33 – Former Potential Burn Area Near AOC 17	Title 22 metals, hexavalent chromium, VOCs, TPH, SVOCs, PAHs, PCBs, asbestos, and dioxin and furans
Unit 4.3 – Oil/Water Holding Tank	Title 22 metals, hexavalent chromium, pH, VOCs, TPH, SVOCs, and PAHs
Perimeter Area	Title 22 metals, hexavalent chromium, TPH, SVOCs, PAHs, and PCBs
Storm Drain System	Title 22 metals, hexavalent chromium, TPH, PAHs, and PCBs

Notes:

[1] Analytical suites as presented in the Revised Final Soil RFI/RI Work Plan.(CH2M HILL 2013)
[2] PCB analysis only on soil collected between 0 and 2 feet below ground surface
AOC - Area of Concern
PAHs - polynuclear aromatic hydrocarbons
PCBs - polychlorinated biphenyls
SVOCs - semivolatile organic compounds
TPH - total petroleum hydrocarbons
VOCs - volatile organic compounds

TABLE A-1A

Sample Containers, Preservation, and Holding Times

Groundwater Remedy Implementation – Baseline Soil Sampling and Analysis Plan
PG&E Topock Compressor Station, Needles, California

Analyte	Method	Container and Minimum Quantity		Preservation	Holding Time
		Water	Soil/Sediment		
Metals (except hexavalent chromium)	SW6010B or C, SW6020A, EPA200.7, EPA200.8, SM3120B, EPA245.1, SW7000 series methods	1-liter P or G	8-oz/P, G, or T	Water: Add HNO_3 to pH<2; soil/sediment: None	28 days for mercury; 180 days for all others
Hexavalent Chromium	SW7199	Not applicable	4-oz/P, G, or T	Soil/sediment: Chill to 4°C (±2°C)	Soil: 30 days to extraction, 7 days to analysis

TABLE A-1A

Sample Containers, Preservation, and Holding Times

Groundwater Remedy Implementation – Baseline Soil Sampling and Analysis Plan
PG&E Topock Compressor Station, Needles, California

Analyte	Method	Container and Minimum Quantity		Preservation	Holding Time
		Water	Soil/Sediment		
Pesticides	SW8081A or B	Two 1-liter Amber G	8-oz/ G or T	Chill to 4°C (±2°C)	Water: 7 days to extraction; 40 days to analysis Soil: 14 days to extraction; 40 days to analysis
PCBs	SW8082 or SW8082A	Two 1-liter Amber G	8-oz/ G or T	Chill to 4°C (±2°C)	Water: 7 days to extraction; 40 days to analysis Soil: 14 days to extraction; 40 days to analysis

TABLE A-1A

Sample Containers, Preservation, and Holding Times

Groundwater Remedy Implementation – Baseline Soil Sampling and Analysis Plan
PG&E Topock Compressor Station, Needles, California

Analyte	Method	Container and Minimum Quantity		Preservation	Holding Time
		Water	Soil/Sediment		
Asbestos	Water – EPA 100.1/100.2-TEM Soil- PLM/BULK (present/absent); CARB435/PLM; TEM	1-liter sonicated P	4-oz G	Chill to 4°C (±2°C)	Water: 48 hour holding time Soil: 1 year
Multiple (California WET)	STLC Extraction Analysis by methods listed above	See specific method above for container	8-oz G	Chill to 4°C (±2°C)	See specific matrix and method above for holding time
Multiple (RCRA TCLP)	TCLP Extraction Analysis by methods listed above	See specific method above for container	8-oz G	Chill to 4°C (±2°C)	See specific matrix and method above for holding time

Notes:

< = less than
≤ = less than or equal to
°C = degrees centigrade
G = glass
HCl = hydrochloric acid
HNO_3 = nitric acid
mL = milliliters
NH_4OH = ammonium hydroxide
$(NH_4)_2SO_4$ = ammonium sulfate
oz = ounce
P = polyethylene
PCBs = polychlorinated biphenyls
PAHs = polynuclear aromatic hydrocarbons
RCRA = Resource Conservation and Recovery Act
SIM = selected ion monitoring
SVOCs = semivolatile organic compounds
T = brass sleeves in the sample barrel (sometimes called California brass)
TCLP = Toxicity Characteristic Leaching Procedure
TLC = Teflon lined closure
TPH = total petroleum hydrocarbons
VOCs = volatile organic compounds
WET = Waste Extraction Test

TABLE A-2
Reference List of Potentially Applicable Analytes and Associated Screening Levels (rev. July 2015)
Groundwater Remedy Implementation - Baseline Soil Sampling and Analysis Plan
PG&E Topock Compressor Station, Needles, California

Group	Analyte	Interim Screening Level		Interim Screening Level Source	Hazardous Waste Disposal Criteria
Dioxins and Furans (ng/kg)					
	1,2,3,4,6,7,8-HpCDD	NE		Not Established	NE
	1,2,3,4,6,7,8-HpCDF	NE		Not Established	NE
	1,2,3,4,7,8,9-HpCDF	NE		Not Established	NE
	1,2,3,4,7,8-HxCDD	NE		Not Established	NE
	1,2,3,4,7,8-HxCDF	NE		Not Established	NE
	1,2,3,6,7,8-HxCDD	NE		Not Established	NE
	1,2,3,6,7,8-HxCDF	NE		Not Established	NE
	1,2,3,7,8,9-HxCDD	NE		Not Established	NE
	1,2,3,7,8,9-HxCDF	NE		Not Established	NE
	1,2,3,7,8-PeCDD	4.8		EPA Residential RSL	NE
	1,2,3,7,8-PeCDF	NE		Not Established	NE
	2,3,4,6,7,8-HxCDF	NE		Not Established	NE
	2,3,4,7,8-PeCDF	NE		Not Established	NE
	2,3,7,8-TCDD	4.8		EPA Residential RSL	See Table A-3
	2,3,7,8-TCDF	NE		Not Established	NE
	OCDD	NE		Not Established	NE
	OCDF	NE		Not Established	NE
	TEQ Avian	16		Soil Ecological Comparison Value (ECV)	NE
	TEQ Human	50		DTSC HHRA Note 2	NE
	TEQ Mammals	1.6		Soil Ecological Comparison Value (ECV)	NE
Metals (mg/kg)					
	Aluminum	16,400		Background Level	NE
	Antimony	0.285		Soil Ecological Comparison Value (ECV)	See Table A-3
	Arsenic	11	*	Background Level	See Table A-3
	Barium	410	*	Background Level	See Table A-3
	Beryllium	0.672		Background Level	See Table A-3
	Cadmium	1.1	*	Background Level	See Table A-3
	Calcium	66,500		Background Level	NE
	Chromium, Hexavalent	0.83	*	Background Level	See Table A-3
	Chromium, total	39.8	*	Background Level	See Table A-3
	Cobalt	12.7	*	Background Level	See Table A-3
	Copper	16.8		Background Level	See Table A-3
	Cyanide	0.9		Soil Ecological Comparison Value (ECV)	NE
	Iron	55,000		EPA Residential RSL	NE
	Lead	8.39	*	Background Level	See Table A-3
	Magnesium	12,100		Background Level	NE
	Manganese	402	*	Background Level	NE
	Mercury	0.0125		Soil Ecological Comparison Value (ECV)	See Table A-3
	Molybdenum	1.37	*	Background Level	See Table A-3
	Nickel	27.3	*	Background Level	See Table A-3
	Potassium	4,400		Background Level	NE
	Selenium	1.47	*	Background Level	See Table A-3
	Silver	5.15		Soil Ecological Comparison Value (ECV)	See Table A-3
	Sodium	2,070		Background Level	NE
	Thallium	0.78		EPA Residential RSL	See Table A-3
	Vanadium	52.2	*	Background Level	See Table A-3
	Zinc	58	*	Background Level	See Table A-3

TABLE A-2
Reference List of Potentially Applicable Analytes and Associated Screening Levels (rev. July 2015)
Groundwater Remedy Implementation - Baseline Soil Sampling and Analysis Plan
PG&E Topock Compressor Station, Needles, California

Group	Analyte	Interim Screening Level	Interim Screening Level Source	Hazardous Waste Disposal Criteria
Pesticides (µg/kg)				
	4,4-DDD	2.1	Soil Ecological Comparison Value (ECV)	See Table A-3
	4,4-DDE	2	EPA Residential RSL	See Table A-3
	4,4-DDT	1.9	EPA Residential RSL	See Table A-3
	Aldrin	39	EPA Residential RSL	See Table A-3
	alpha-BHC	86	EPA Residential RSL	NE
	alpha-Chlordane	470	Soil Ecological Comparison Value (ECV)	See Table A-3
	beta-BHC	300	EPA Residential RSL	NE
	delta-BHC	300	EPA Residential RSL	NE
	Dieldrin	5	Soil Ecological Comparison Value (ECV)	See Table A-3
	Endo sulfan I	470,000	EPA Residential RSL	NE
	Endo sulfan II	470,000	EPA Residential RSL	NE
	Endosulfan sulfate	470,000	EPA Residential RSL	NE
	Endrin	19,000	EPA Residential RSL	See Table A-3
	Endrin aldehyde	19,000	EPA Residential RSL	NE
	Endrin ketone	19,000	EPA Residential RSL	NE
	gamma-BHC (Lindane)	570	EPA Residential RSL	See Table A-3
	gamma-Chlordane	0.43	DTSC-Residential SLs	See Table A-3
	Heptachlor	130	EPA Residential RSL	See Table A-3
	Heptachlor Epoxide	70	EPA Residential RSL	See Table A-3
	Methoxychlor	320,000	EPA Residential RSL	See Table A-3
	Toxaphene	490	EPA Residential RSL	See Table A-3
Polyaromatic Hydrocarbons (µg/kg)				
	1-Methyl naphthalene	18,000	EPA Residential RSL	NE
	2-Methyl naphthalene	240,000	EPA Residential RSL	NE
	Acenaphthene	3,600,000	EPA Residential RSL	NE
	Acenaphthylene	3,600,000	EPA Residential RSL	NE
	Anthracene	18,000,000	EPA Residential RSL	NE
	B(a)P Equivalent	16	EPA Residential RSL	NE
	Benzo (a) anthracene	160	EPA Residential RSL	NE
	Benzo (a) pyrene	16	EPA Residential RSL	NE
	Benzo (b) fluoranthene	160	EPA Residential RSL	NE
	Benzo (ghi) perylene	1,800,000	EPA Residential RSL	NE
	Benzo (k) fluoranthene	0.39	DTSC-Residential SLs	NE
	Chrysene	3.9	DTSC-Residential SLs	NE
	Dibenzo (a,h) anthracene	16	EPA Residential RSL	NE
	Fluoranthene	2,400,000	EPA Residential RSL	NE
	Fluorene	2,400,000	EPA Residential RSL	NE
	Indeno (1,2,3-cd) pyrene	160	EPA Residential RSL	NE
	Naphthalene	3,800	EPA Residential RSL	NE
	PAH High molecular weight	1,160	Soil Ecological Comparison Value (ECV)	NE
	PAH Low molecular weight	10,000	Soil Ecological Comparison Value (ECV)	NE
	Phenanthrene	1,800,000	EPA Residential RSL	NE
	Pyrene	1,800,000	EPA Residential RSL	NE
Polychlorinated Biphenyls (µg/kg)				
	Aroclor 1016	0.23	DTSC-Residential SLs	See Table A-3
	Aroclor 1221	170	EPA Residential RSL	See Table A-3

TABLE A-2
Reference List of Potentially Applicable Analytes and Associated Screening Levels (rev. July 2015)
Groundwater Remedy Implementation - Baseline Soil Sampling and Analysis Plan
PG&E Topock Compressor Station, Needles, California

Group	Analyte	Interim Screening Level	Interim Screening Level Source	Hazardous Waste Disposal Criteria
Polychlorinated Biphenyls (µg/kg)				
	Aroclor 1232	170	EPA Residential RSL	See Table A-3
	Aroclor 1242	230	EPA Residential RSL	See Table A-3
	Aroclor 1248	230	EPA Residential RSL	See Table A-3
	Aroclor 1254	240	EPA Residential RSL	See Table A-3
	Aroclor 1260	240	EPA Residential RSL	See Table A-3
	Aroclor 1262	240	EPA Residential RSL	See Table A-3
	Aroclor 1268	240	EPA Residential RSL	See Table A-3
	Total PCBs	204	Soil Ecological Comparison Value (ECV)	See Table A-3
Semivolatile Organic Compounds (µg/kg)				
	1,1´-Biphenyl	47,000	EPA Residential RSL	NE
	1,2,4,5-Tetrachlorobenzene	23,000	EPA Residential RSL	NE
	1,4-Dioxane	5,300	EPA Residential RSL	NE
	2,3,4,6-Tetrachlorophenol	1,900,000	EPA Residential RSL	NE
	2,4,5-Trichlorophenol	6,300,000	EPA Residential RSL	See Table A-3
	2,4,6-Trichlorophenol	7.5	DTSC-Residential SLs	See Table A-3
	2,4-Dichlorophenol	190,000	EPA Residential RSL	NE
	2,4-Dimethylphenol	1,300,000	EPA Residential RSL	NE
	2,4-Dinitrophenol	130,000	EPA Residential RSL	NE
	2,4-Dinitrotoluene	1,700	EPA Residential RSL	See Table A-3
	2,6-Dinitrotoluene	360	EPA Residential RSL	NE
	2-Chloro naphthalene	4,800,000	EPA Residential RSL	NE
	2-Chlorophenol	390,000	EPA Residential RSL	NE
	2-Methylphenol (o-Cresol)	3,200,000	EPA Residential RSL	See Table A-3
	2-Nitroaniline	630,000	EPA Residential RSL	NE
	3,3-Dichlorobenzidene	1,200	EPA Residential RSL	NE
	3-Nitroaniline	630,000	EPA Residential RSL	NE
	4,6-Dinitro-2-methylphenol	5,100	EPA Residential RSL	NE
	4-Chloro-3-methylphenol	6,300,000	EPA Residential RSL	NE
	4-Chloroaniline	2,700	EPA Residential RSL	NE
	4-Methylphenol (p-Cresol)	500	Soil Ecological Comparison Value (ECV)	See Table A-3
	4-Nitroaniline	27,000	EPA Residential RSL	NE
	Acetophenone	7,800,000	EPA Residential RSL	NE
	Atrazine	2,400	EPA Residential RSL	NE
	Benzaldehyde	7,800,000	EPA Residential RSL	NE
	Benzoic acid	250,000,000	EPA Residential RSL	NE
	Benzyl alcohol	6,300,000	EPA Residential RSL	NE
	Bis (2-chloroethoxy) methane	190,000	EPA Residential RSL	NE
	Bis (2-ethylhexyl) phthalate	2,870	Soil Ecological Comparison Value (ECV)	NE
	Butyl benzyl phthalate	290,000	EPA Residential RSL	NE
	Caprolactam	31,000,000	EPA Residential RSL	NE
	Carbazole	1,600,000	EPA Residential RSL	NE
	Dibenzofuran	73,000	EPA Residential RSL	NE
	Diethyl phthalate	51,000,000	EPA Residential RSL	NE
	Dimethyl phthalate	51,000,000	EPA Residential RSL	NE
	Di-N-butyl phthalate	46.9	Soil Ecological Comparison Value (ECV)	NE
	Di-N-octyl phthalate	630,000	EPA Residential RSL	NE
	Hexachlorobenzene	210	EPA Residential RSL	See Table A-3

TABLE A-2
Reference List of Potentially Applicable Analytes and Associated Screening Levels (rev. July 2015)
Groundwater Remedy Implementation - Baseline Soil Sampling and Analysis Plan
PG&E Topock Compressor Station, Needles, California

Group	Analyte	Interim Screening Level	Interim Screening Level Source	Hazardous Waste Disposal Criteria
Semivolatile Organic Compounds (µg/kg)				
	Hexachloroethane	1,800	EPA Residential RSL	See Table A-3
	N-Nitroso-di-n-propylamine	78	EPA Residential RSL	NE
	N-nitrosodiphenylamine	110,000	EPA Residential RSL	NE
	Pentachlorophenol	1,000	EPA Residential RSL	See Table A-3
	Phenol	19,000,000	EPA Residential RSL	NE
Total Petroleum Hydrocarbons (mg/kg)				
	TPH as diesel	240	SF RWQCB ESL for direct exposure (2013)	NE
	TPH as gasoline	770	SF RWQCB ESL for direct exposure (2013)	NE
	TPH as motor oil	10,000	SF RWQCB ESL for direct exposure (2013)	NE
Volatile Organic Compounds (µg/kg)				
	1,1,1,2-Tetrachloroethane	550	DTSC-Residential SLs	NE
	1,1,1-Trichloroethane	1,700	DTSC-Residential SLs	NE
	1,1,2,2-Tetrachloroethane	600	EPA Residential RSL	NE
	1,1,2-Trichloroethane	1,100	EPA Residential RSL	NE
	1,1,2-Trichlorotrifluoroethane (Freon 113)	40,000,000	EPA Residential RSL	NE
	1,1-Dichloroethane	1,600	DTSC-Residential SLs	NE
	1,1-Dichloroethene	230,000	EPA Residential RSL	See Table A-3
	1,1-Dichloropropene	1,800	EPA Residential RSL	NE
	1,2,3-Trichlorobenzene	63,000	EPA Residential RSL	NE
	1,2,3-Trichloropropane	5.1	EPA Residential RSL	NE
	1,2,4-Trichlorobenzene	24,000	EPA Residential RSL	NE
	1,2,4-Trimethylbenzene	58,000	EPA Residential RSL	NE
	1,2-Dibromo-3-chloropropane	5.3	EPA Residential RSL	NE
	1,2-Dibromoethane	7.2	DTSC-Residential SLs	NE
	1,2-Dichlorobenzene	1,800,000	EPA Residential RSL	NE
	1,2-Dichloroethane	460	EPA Residential RSL	See Table A-3
	1,2-Dichloropropane	1,000	EPA Residential RSL	NE
	1,3,5-Trimethylbenzene	210	DTSC-Residential SLs	NE
	1,3-Dichlorobenzene	1,800,000	EPA Residential RSL	NE
	1,3-Dichloropropane	420	DTSC-Residential SLs	NE
	1,4-Dichlorobenzene	2,600	EPA Residential RSL	See Table A-3
	2,2-Dichloropropane	1,600,000	EPA Residential RSL	NE
	2-Chlorotoluene	480	DTSC-Residential SLs	NE
	2-Hexanone	200,000	EPA Residential RSL	NE
	4-Isopropyltoluene	1,900,000	EPA Residential RSL	NE
	Acetone	61,000,000	EPA Residential RSL	NE
	Acrolein	140	EPA Residential RSL	NE
	Acrylonitrile	0.068	DTSC-Residential SLs	NE
	Benzene	0.33	DTSC-Residential SLs	See Table A-3
	Bis (2-chloroethyl) ether	230	EPA Residential RSL	NE
	Bis (2-chloroisopropyl) ether	4,900	EPA Residential RSL	NE
	Bromobenzene	290,000	EPA Residential RSL	NE
	Bromochloromethane	150,000	EPA Residential RSL	NE
	Bromodichloromethane	280	DTSC-Residential SLs	NE
	Bromoform	19,000	EPA Residential RSL	NE
	Bromomethane	6,800	EPA Residential RSL	NE

TABLE A-2
Reference List of Potentially Applicable Analytes and Associated Screening Levels (rev. July 2015)
Groundwater Remedy Implementation - Baseline Soil Sampling and Analysis Plan
PG&E Topock Compressor Station, Needles, California

Group	Analyte	Interim Screening Level	Interim Screening Level Source	Hazardous Waste Disposal Criteria
Volatile Organic Compounds (µg/kg)				
	Carbon disulfide	770,000	EPA Residential RSL	NE
	Carbon tetrachloride	0.099	DTSC-Residential SLs	See Table A-3
	Chlorobenzene	280,000	EPA Residential RSL	See Table A-3
	Chloroethane	3.1	DTSC-Residential SLs	NE
	Chloroform	320	EPA Residential RSL	See Table A-3
	Chloromethane	110,000	EPA Residential RSL	NE
	cis-1,2-Dichloroethene	19	DTSC-Residential SLs	NE
	cis-1,3-Dichloropropene	1,800	EPA Residential RSL	NE
	Cyclohexane	6,500,000	EPA Residential RSL	NE
	Dibromochloromethane	750	EPA Residential RSL	NE
	Dibromomethane	23,000	EPA Residential RSL	NE
	Dichlorodifluoromethane	87,000	EPA Residential RSL	NE
	Ethylbenzene	5,800	EPA Residential RSL	NE
	Hexachlorobutadiene	1,200	EPA Residential RSL	See Table A-3
	Hexachlorocyclopentadiene	1,800	EPA Residential RSL	NE
	Isophorone	570,000	EPA Residential RSL	NE
	Isopropylbenzene	1,900,000	EPA Residential RSL	NE
	m,p-Xylenes	550,000	EPA Residential RSL	NE
	Methyl acetate	24,000	DTSC-Residential SLs	NE
	Methyl ethyl ketone	27,000,000	EPA Residential RSL	See Table A-3
	Methyl isobutyl ketone	5,300,000	EPA Residential RSL	NE
	Methyl tert-butyl ether (MTBE)	47,000	EPA Residential RSL	NE
	Methylcyclohexane	6,500,000	EPA Residential RSL	NE
	Methylene chloride	5.5	DTSC-Residential SLs	NE
	N-Butylbenzene	1,200	DTSC-Residential SLs	NE
	Nitrobenzene	5,100	EPA Residential RSL	See Table A-3
	N-Propylbenzene	3,800,000	EPA Residential RSL	NE
	o-Xylene	650,000	EPA Residential RSL	NE
	p-Chlorotoluene	440	DTSC-Residential SLs	NE
	sec-Butylbenzene	2,200	DTSC-Residential SLs	NE
	Styrene	6,000,000	EPA Residential RSL	NE
	tert-Butylbenzene	2,200	DTSC-Residential SLs	NE
	Tetrachloroethene	0.6	DTSC-Residential SLs	See Table A-3
	Toluene	1,100	DTSC-Residential SLs	NE
	trans-1,2-Dichloroethene	190	DTSC-Residential SLs	NE
	trans-1,3-Dichloropropene	1,800	EPA Residential RSL	NE
	Trichloroethene	940	EPA Residential RSL	See Table A-3
	Trichlorofluoromethane (Freon 11)	730,000	EPA Residential RSL	NE
	Vinyl chloride	59	EPA Residential RSL	See Table A-3
	Xylenes, total	650,000	EPA Residential RSL	NE

Notes:

This table presents a reference list of analytes and associated screening levels that may be applicable for making decisions related to disposition of displaced site materials. The specific analytes and screening levels applicable for characterization of displaced material will be determined based on the origin of the material and potential disposition locations.

Interim screening level is background value. If background value is not available then the lesser of the DTSC HHRA Note 3 Residential Screening Levels (DTSC Residential SL) or the ecological comparison value is used. If a DTSC Residential SL is not available, it is the lesser of the USEPA residential regional screening level or the ecological comparison value.

Background	"Final Soil Background Investigation at Pacific Gas and Electric Company Topock Compressor Station, Needles, California" (CH2M HIll 2009c)
DTSC-Residential SLs	Human Health Risk Assessment Note 3 – DTSC-Modified Screening Levels, May 2015.
EPA Residential RSL	United States Environmental Protection Agency Residential Soil Regional Screening Level (THQ=1.0), June 2015.
ECV	Ecological Comparison Values; ECV were calculated as needed for constituents detected during the Part A Phase I sampling (Arcadis 2008)
HHRA Note 2	DTSC Human Health Risk Assessment (HHRA) Note 2: Remedial Goals for Dioxins and Dioxin-like Compounds for Consideration at California Hazardous Waste Sites – Interim (May 2009).
SF RWQCB ESL	San Francisco Bay Regional Water Quality Control Board Environmental Screening Levels for residential direct exposure (2013)
*	One or more screening levels (EPA Residential RSL, DTSC-Residential SLs, ECV, or Soil SL) have values lower than the background level.
NE	not established
mg/kg	milligrams per kilogram
ng/kg	nanograms per kilogram
µg/kg	micrograms per kilogram

TABLE A-3
Hazardous Waste Toxicity Characteristic Levels
Groundwater Remedy Implementation - Baseline Soil Sampling and Analysis Plan
PG&E Topock Compressor Station, Needles, California

Group	Analyte	TTLC [a, i]	STLC [b] Screen	RCRA TC [c] Screen	STLC [d, i] (from WET)	RCRA TC [e] (from TCLP)	EPA HW [f]
		mg/kg	mg/kg	mg/kg	mg/L	mg/L	
Asbetos							
	Asbestos	1%	NE	NE	NE	NE	NE
Dioxins and Furans							
	2,3,7,8-TCDD	0.01	0.01	NE	0.001	NE	NE
Metals							
	Antimony	500	150	NE	15	NE	NE
	Arsenic	500	50	100	5	5	D004
j	Barium	10,000	1,000	2,000	100	100	D005
	Beryllium	75	7.5	NE	0.75	NE	NE
	Cadmium	100	10	20	1	1	D006
	Chromium, Hexavalent	500	50	NE	5	NE	NE
k	Chromium, total	2,500	50	100	5	5	D007
	Cobalt	8,000	800	NE	80	NE	NE
	Copper	2,500	250	NE	25	NE	NE
	Lead	1,000	50	100	5	5	D008
	Mercury	20	2	4	0.2	0.2	D009
l	Molybdenum	3,500	3,500	NE	350	NE	NE
	Nickel	2,000	200	NE	20	NE	NE
	Selenium	100	10	20	1	1	D010
	Silver	500	50	100	5	5	D011
	Thallium	700	70	NE	7	NE	NE
	Vanadium	2,400	240	NE	24	NE	NE
	Zinc	5,000	2,500	NE	250	NE	NE
Pesticides							
	4,4-DDD	1	1	NE	0.1	NE	NE
	4,4-DDE	1	1	NE	0.1	NE	NE
	4,4-DDT	1	1	NE	0.1	NE	NE
	Aldrin	1.4	1.4	NE	0.14	NE	NE
	alpha-Chlordane	2.5	2.5	0.6	0.25	0.03	D020
	Dieldrin	8	8	NE	0.8	NE	NE
	Endrin	0.2	0.2	0.4	0.02	0.02	D012
	gamma-BHC (Lindane)	4	4	8	0.4	0.4	D013
	gamma-Chlordane	2.5	2.5	0.6	0.25	0.03	D020
	Heptachlor	4.7	4.7	0.16	0.47	0.008	D031
	Heptachlor Epoxide	4.7	4.7	0.16	0.47	0.008	D031
	Methoxychlor	100	100	200	10	10	D014
	Toxaphene	5	5	10	0.5	0.5	D015
Polychlorinated Biphenyls							
	Aroclor 1016	50	50	NE	5	NE	NE
	Aroclor 1221	50	50	NE	5	NE	NE
	Aroclor 1232	50	50	NE	5	NE	NE
	Aroclor 1242	50	50	NE	5	NE	NE
	Aroclor 1248	50	50	NE	5	NE	NE
	Aroclor 1254	50	50	NE	5	NE	NE
	Aroclor 1260	50	50	NE	5	NE	NE
	Aroclor 1262	50	50	NE	5	NE	NE
	Aroclor 1268	50	50	NE	5	NE	NE
	Total PCBs	50	50	NE	5	NE	NE

TABLE A-3
Hazardous Waste Toxicity Characteristic Levels
Groundwater Remedy Implementation - Baseline Soil Sampling and Analysis Plan
PG&E Topock Compressor Station, Needles, California

Group	Analyte	TTLC [a, i]	STLC [b] Screen	RCRA TC [c] Screen	STLC [d, i] (from WET)	RCRA TC [e] (from TCLP)	EPA HW [f]
		mg/kg	mg/kg	mg/kg	mg/L	mg/L	
Polychlorinated Biphenyls							
Semivolatile Organic Compounds							
	2,4-Dinitrotoluene	NE	NE	2.6	NE	0.13	D030
g	2-Methylphenol (o-Cresol)	NE	NE	4,000	NE	200	D023
g	3-Methylphenol (m-Cresol)	NE	NE	4,000	NE	200	D024
g	4-Methylphenol (p-Cresol)	NE	NE	4,000	NE	200	D025
	Hexachlorobenzene	NE	NE	2.6	NE	0.13	D032
	Hexachloroethane	NE	NE	60	NE	3	D034
	Pentachlorophenol	17	17	2,000	1.7	100	D037
Volatile Organic Compounds							
	1,1-Dichloroethene	NE	NE	14	NE	0.7	D029
	1,2-Dichloroethane	NE	NE	10	NE	0.5	D028
	1,4-Dichlorobenzene	NE	NE	150	NE	7.5	D027
	2,4,5-Trichlorophenol	NE	NE	8,000	NE	400	D041
	2,4,6-Trichlorophenol	NE	NE	40	NE	2	D042
	Benzene	NE	NE	10	NE	0.5	D018
	Carbon tetrachloride	NE	NE	10	NE	0.5	D019
	Chlorobenzene	NE	NE	2,000	NE	100	D021
	Chloroform	NE	NE	120	NE	6	D022
	Hexachlorobutadiene	NE	NE	10	NE	0.5	D033
	Methyl ethyl ketone	NE	NE	4,000	NE	200	D035
	Nitrobenzene	NE	NE	40	NE	2	D036
	Tetrachloroethene	NE	NE	14	NE	0.7	D039
	Trichloroethene	2,040	2,040	10	204	0.5	D040
	Vinyl chloride	NE	NE	4	NE	0.2	D043

Notes:

NE	not established
mg/kg	milligrams per kilogram
mg/L	milligrams per liter
EPA HW	Environmental Protection Agency Hazardous Waste Code
TC	Toxicity Characteristic
TTLC	Total Threshold Limit Concentration
STLC	Soluble Threshold Limit Concentration
RCRA	Resource Conservation and Recovery Act
TCLP	Toxicity Characteristic Leaching Procedure
WET	California Waste Extraction Test

Hazardous waste critiera exist for kepone, 2,4-D, mirex, pyridine, and 2,45-TP (Silvex); however, since they are not contaminants of potential concern at the Topock site, they are excluded from this table.

a	Total Threshold Limit Concentration (TTLC) from 22 CCR 66261.24(a)(2). Calculated based on the concentration of the elements, not the compounds.
b	Screening level is 10x Soluble Threshold Limit Concentraction (STLC). If screening level is exceeded in total analysis, California Waste Extraction Test (WET) should be run to evaluate whether STLC is exceeded.
c	Screening level is 20x RCRA Toxicity Characteristic (TC). If screening level is exceeded in total analysis, Toxicity Characteristic Leaching Procedure (TCLP) should be run to evaluate whether RCRA TC is exceeded.
d	Soluble threshold limit concentration from 22 CCR 66261.24(a)(2), measured using the WET. Calculated based on the concentration of the elements, not the compounds.
e	RCRA TC level from 22 CCR 66261.24(a)(1), measured using the TCLP.
f	A waste is assigned a RCRA waste code for each constituent where the results of the TCLP equal or exceed the RCRA TC level.
g	If o-, m- and p-Cresol concentrations cannot be differentiated, the total cresol (D026) concentration is used. The regulatory level of total cresol is 200 mg/L.
i	In the case of asbestos and elemental metals, the specified concentration limits apply only if the substances are in a friable, powdered or finely divided state. Asbestos includes chrysotile, amosite, crocidolite, tremolite, anthophyllite, and actinolite.
j	TTLC and STLC exclude barite. TTLC excludes barium sulfate.
k	For STLC, if the waste does not exceed the RCRA TC or exhibit another RCRA hazardous characteristic, the STLC is 560 mg/L, not 5 mg/L.
l	For TTLC, excludes molybdenum disulfide.
h	Quantitation limit is greater than the calculated regulatory level. The quantitation limit therefore becomes the regulatory level.

Figures

COLORADO RIVER

MW-20 Bench

See Figure A-1A
for Detailed Drawing
of the
Topock Compressor Station Area

Transwestern Bench

LEGEND

- Proposed Remedy System Soil Sample Location
- Proposed Remedy System Well and Vault Soil Sample Location
- Proposed RFI/RI Soil Sample Location
- Proposed XRF Screening Location
- Existing Soil Sample Location
- Existing Opportunistic Soil Sample Location

Provisional Wells:

- Extraction Well
- Injection Well
- Monitoring Well

- Planned Transformer
- Future Provisional Transformer
- Site Fence Boundary
- Stormwater Piping Below Ground
- Stormwater Piping Above Ground

Pipeline Corridor for Remedy

- Aboveground Pipe
- Underground Pipe/Conduit
- Property Boundaries
- Area of Potential Effects (APE)
- EIR Project Area

- Area for East Ravine (ER) Wells (ER-7 to ER-11)
- Area for Potential Slant Well Screens
- Area for Inner Recirculation Loop (IRL) Wells
- Area for River Bank Extraction Wells

Work Areas

- Solid Waste Management Unit (SWMU)
- Area of Concern (AOC)
- Other

Remedy Facilities

- Proposed Remedy Structure
- Contingent Freshwater Pre-injection Treatment System

Notes:
1. Soil sampling locations are approximate.
2. No baseline soil sampling is proposed for freshwater pipeline, wells, and associated infrastructure.
3. Baseline soil samples will be collected at 0.5 feet below ground surface (bgs) for aboveground pipelines/conduit runs and from the bottom of the trench for underground pipelines/conduit runs approximately every 500 linear feet along proposed pipeline/conduit runs (see Figure A-4 for more details).
4. Baseline soil samples will be collected at 0.5 feet bgs below the remedy structure on a 50-foot grid, or a minimum of one sample location within each remedy structure footprint (see Figure A-5 for more details).
5. Baseline soil samples will be collected at 1 foot bgs at each new monitoring, extraction, injection, and recirculation well and at 0.5 feet bgs from the bottom of the associated well vault.
6. If provisional groundwater remedy infrastructure and areas are needed, they will be sampled according to the baseline sampling program at the time of installation/use.
7. To minimize disturbance and potential impacts to sensitive resources, baseline soil samples have not been proposed at remedy infrastructure if soil RFI/RI Investigation proposed sample locations and/or existing soil data locations are located within 20 feet the infrastructure and meet the criteria of the baseline sample program.
8. All well and structure locations are approximate.

N

0 145 290 580 Feet

FIGURE A-1
GROUNDWATER REMEDY FEATURES, SOLID WASTE MANAGEMENT UNITS, AREAS OF CONCERN, BASELINE SOIL SAMPLE LOCATIONS, EXISTING AND PROPOSED RFI/RI SOIL SAMPLE LOCATIONS OUTSIDE THE COMPRESSOR STATION

GROUNDWATER REMEDY IMPLEMENTATION - SOIL MANAGEMENT PLAN
PG&E TOPOCK COMPRESSOR STATION,
NEEDLES, CALIFORNIA

CH2MHILL

Path: R:\PGEAlliance\Topock\MapFiles\2015\CMS\100PercentDesign\OM_Manual\FgA1_RemedyLayout_AOCs_Samples.mxd Date Saved: 10/15/2015 4:57:06 PM

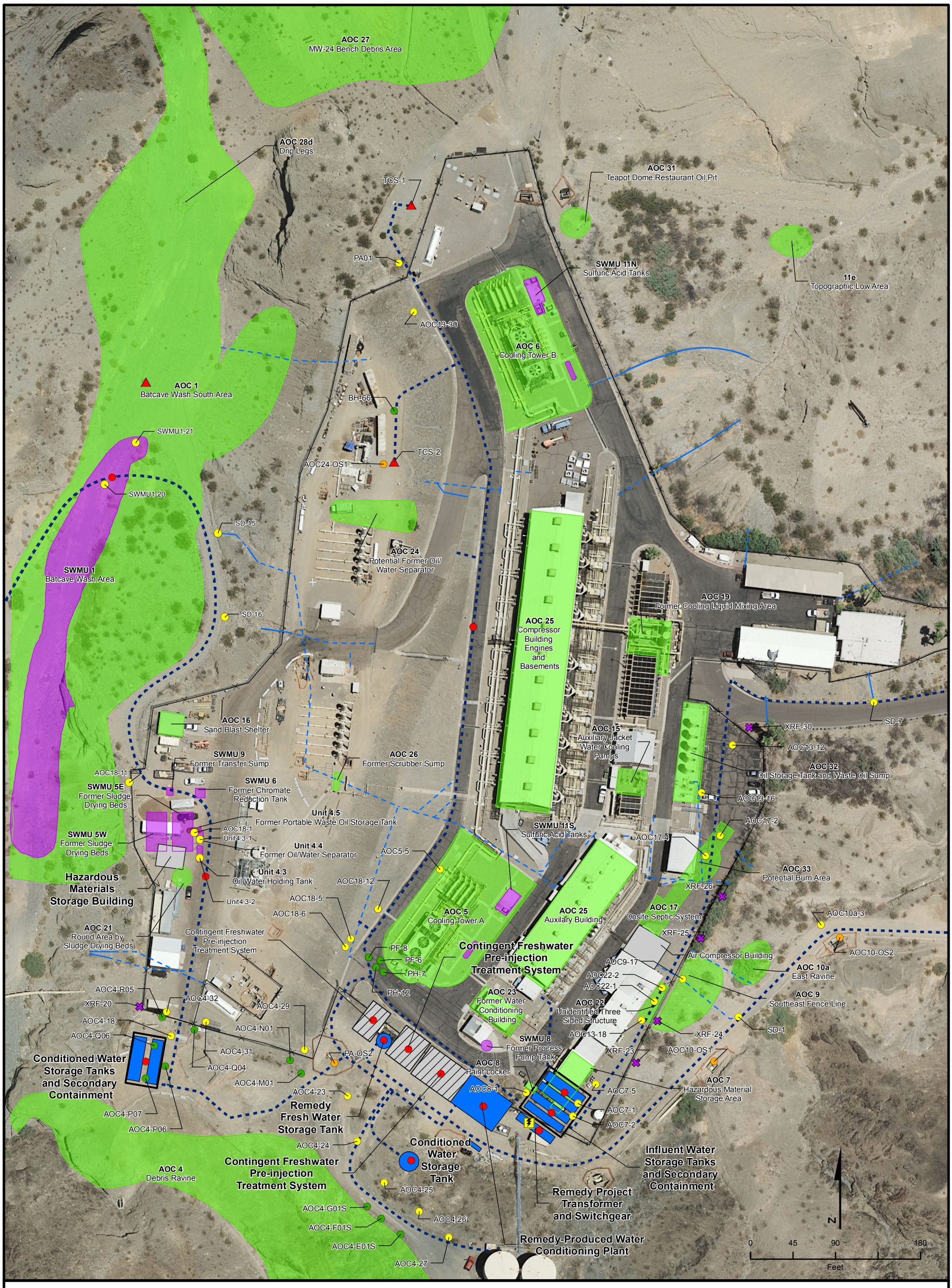

LEGEND

- Proposed Remedy System Soil Sample Location
- Planned Transformer
- Site Fence Boundary
- Stormwater Piping Below Ground
- Stormwater Piping Above Ground

Pipeline Corridor for Remedy

- Underground Pipe/Conduit

Work Areas

- Solid Waste Management Unit (SWMU)
- Area of Concern (AOC)

Remedy Facilities

- Proposed Remedy Structure
- Contingent Freshwater Pre-injection Treatment System

Notes:

1. Soil sampling locations are approximate.
2. No baseline soil sampling is proposed for freshwater pipeline, wells, and associated infrastructure.
3. Baseline soil samples will be collected approximately every 500 linear feet along proposed pipeline/conduit runs (see Figure A-4 for more details).
4. Baseline soil samples will be collected on a 50-foot grid, or a minimum of one sample location within each remedy structure footprint (see Figure A-5 for more details).
5. Baseline soil samples will be collected at each new monitoring, extraction, injection, and recirculation well and associated well vault.
6. If provisional groundwater remedy infrastructure and areas are needed, they will be sampled according to the baseline sampling program at the time of installation/use.
7. To minimize disturbance and potential impacts to sensitive resources, baseline soil samples have not been proposed at remedy infrastructure if soil RFI/RI Investigation proposed sample locations and/or existing soil data locations are located within 20 feet the infrastructure and meet the criteria of the baseline sample program.
8. All well and structure locations are approximate.

FIGURE A-1A
GROUNDWATER REMEDY FEATURES, SOLID WASTE MANAGEMENT UNITS, AREAS OF CONCERN, BASELINE SOIL SAMPLE LOCATIONS, EXISTING AND PROPOSED RFI/RI SOIL SAMPLE LOCATIONS WITHIN AND NEARBY THE COMPRESSOR STATION

GROUNDWATER REMEDY IMPLEMENTATION - SOIL MANAGEMENT PLAN
PG&E TOPOCK COMPRESSOR STATION, NEEDLES, CALIFORNIA

CH2MHILL

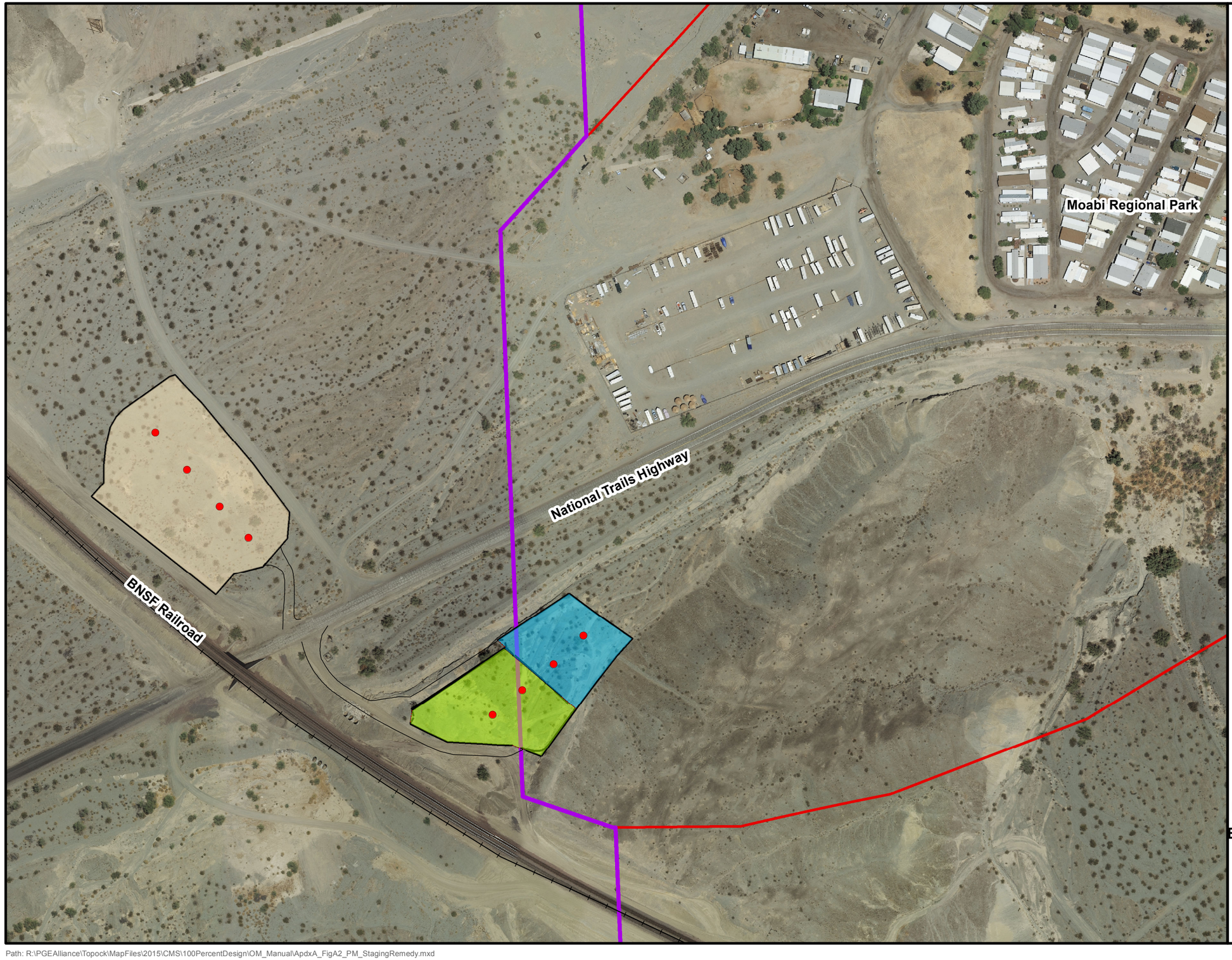

VICINITY MAP

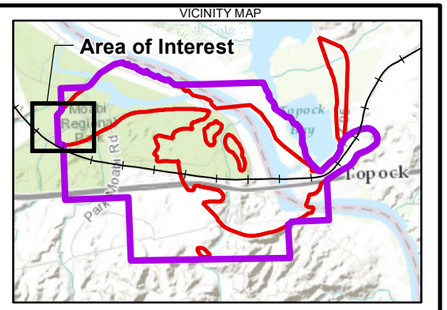

LEGEND

- Proposed Remedy System Soil Sample Location
- Long-term Remedy Support Area (0.8 Acres Approximate)
- Soil Storage/Processing Area (2.56 Acres)
- Temporary Construction Laydown Area (1.05 Acres Approximate)
- Area of Potential Effects (APE)
- EIR Project Area

Notes:
1. Soil sampling locations are approximate.
2. Surface soil samples (0.5 feet below ground surface) on a 100 foot grid within the soil processing area and the longterm remedy support/temporary construction laydown area.

N

0 90 180 360 Feet

Service Layer Credits: Sources: Esri, HERE, DeLorme, Intermap, increment P Corp., GEBCO, USGS, FAO, NPS, NRCAN, GeoBase, IGN, Kadaster NL, Ordnance Survey, Esri Japan, METI, Esri China (Hong Kong), swisstopo, MapmyIndia, © OpenStreetMap contributors, and the GIS

FIGURE A-2

MOABI REGIONAL PARK FACILITIES

BASELINE SOIL SAMPLE LOCATIONS

GROUNDWATER REMEDY IMPLEMENTATION -
SOIL MANAGEMENT PLAN
PG&E TOPOCK COMPRESSOR STATION,
NEEDLES, CALIFORNIA

CH2MHILL

Path: R:\PGEAlliance\Topock\MapFiles\2015\CMS\100PercentDesign\OM_Manual\ApdxA_FigA2_PM_StagingRemedy.mxd

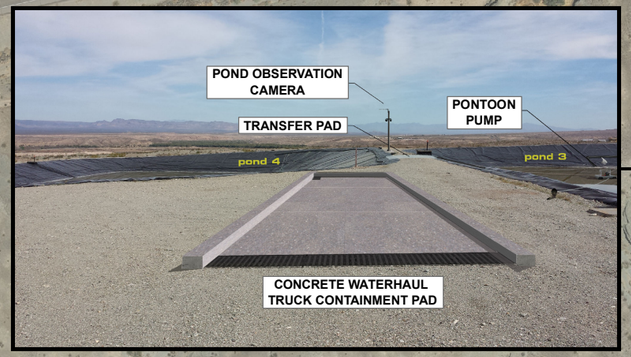

NYLON GUY WIRES

PONTOON PUMP (TYP)

POND 4

AGITATOR (TYP)

CONCRETE WATERHAUL TRUCK CONTAINMENT PAD

POND OBSERVATION CAMERA

POND 3

PONTOON PUMP (TYP)

AGITATOR (TYP)

POND 2

UTILITY BUILDING

THERMOELECTRIC GENERATORS

POND 1

INSTRUMENTAL MOTOR OPERATED VALVE (TYP)

GAS SUPPLY

L-300B

L-300B

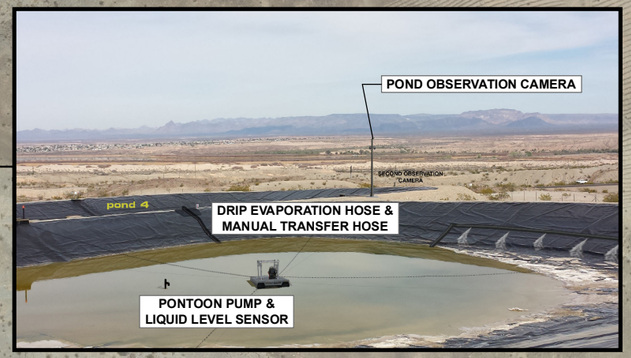

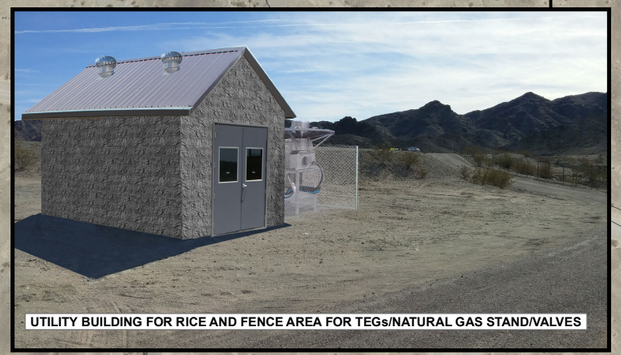



LEGEND

- Proposed Remedy System Soil Sample Location
- Underground Gas Supply Pipe
- Proposed Remedy Structure

Notes:

1. All remedy structure locations are approximate.

N

0 100 200 400 Feet

FIGURE A-3
TCS EVAPORATION PONDS BASELINE SOIL SAMPLE LOCATIONS
GROUNDWATER REMEDY IMPLEMENTATION - SOIL MANAGEMENT PLAN
PG&E TOPOCK COMPRESSOR STATION, NEEDLES, CALIFORNIA

CH2MHILL

BAO R:\PGEALLIANCE\TOPOCK\MAPFILES\2015\CMS\100PERCENTDESIGN\OM_MANUAL\APDXA_FIGA3_PONDLAYOUT.MXD ETOWERS_CH2MHILLENVG 10/2/2015 12:27:39 PM

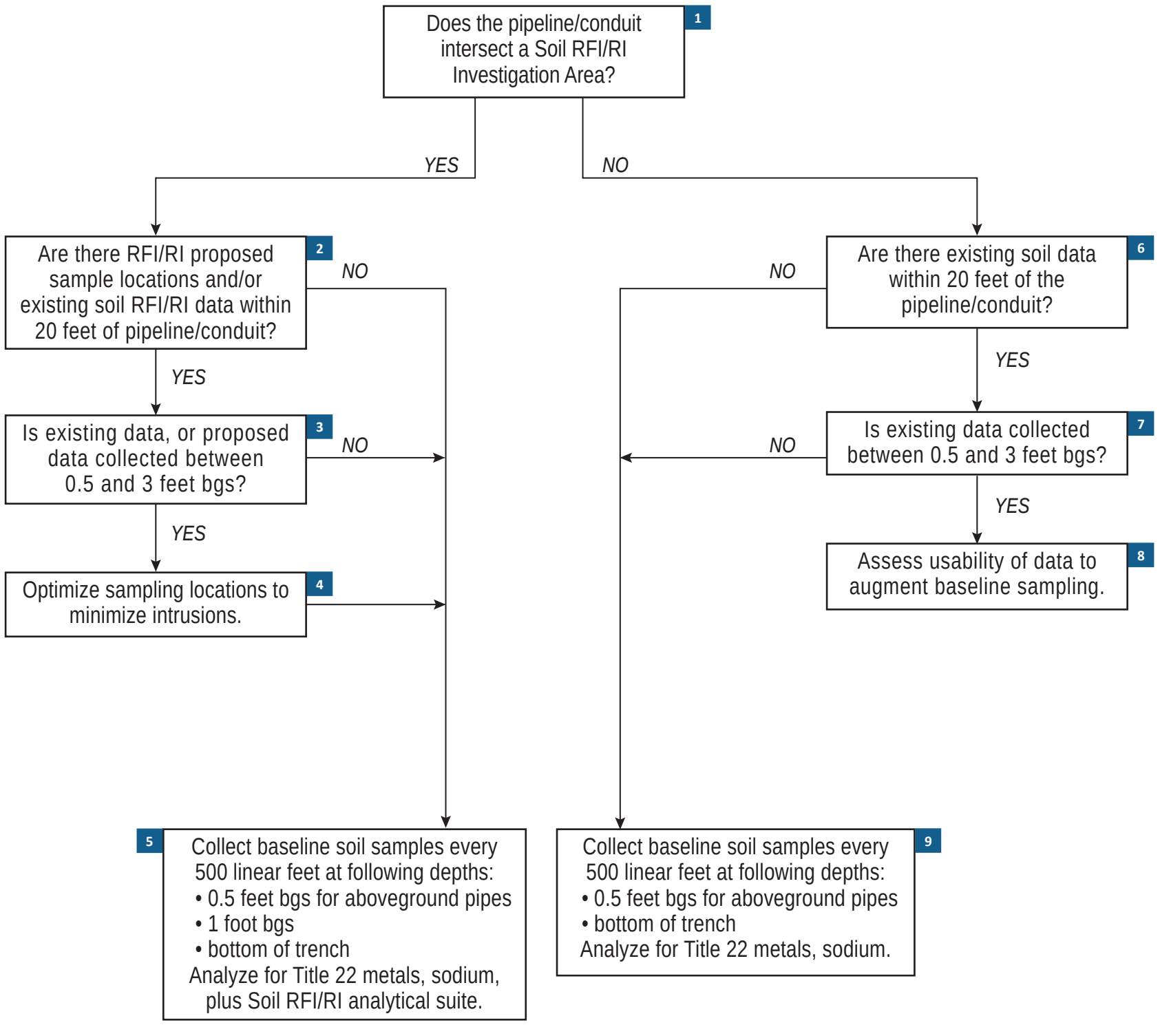

LEGEND

bgs below ground surface
RFI/RI Resource Recovery and Conservation Act Facility Investigation/Remedial Investigation

Figure A-4
Pipelines/Conduits Baseline Sampling Decision Tree
Groundwater Remedy Implementation – Baseline Soil Sampling and Analysis Plan
Pacific Gas and Electric Company
Topock Compressor Station
Needles, California

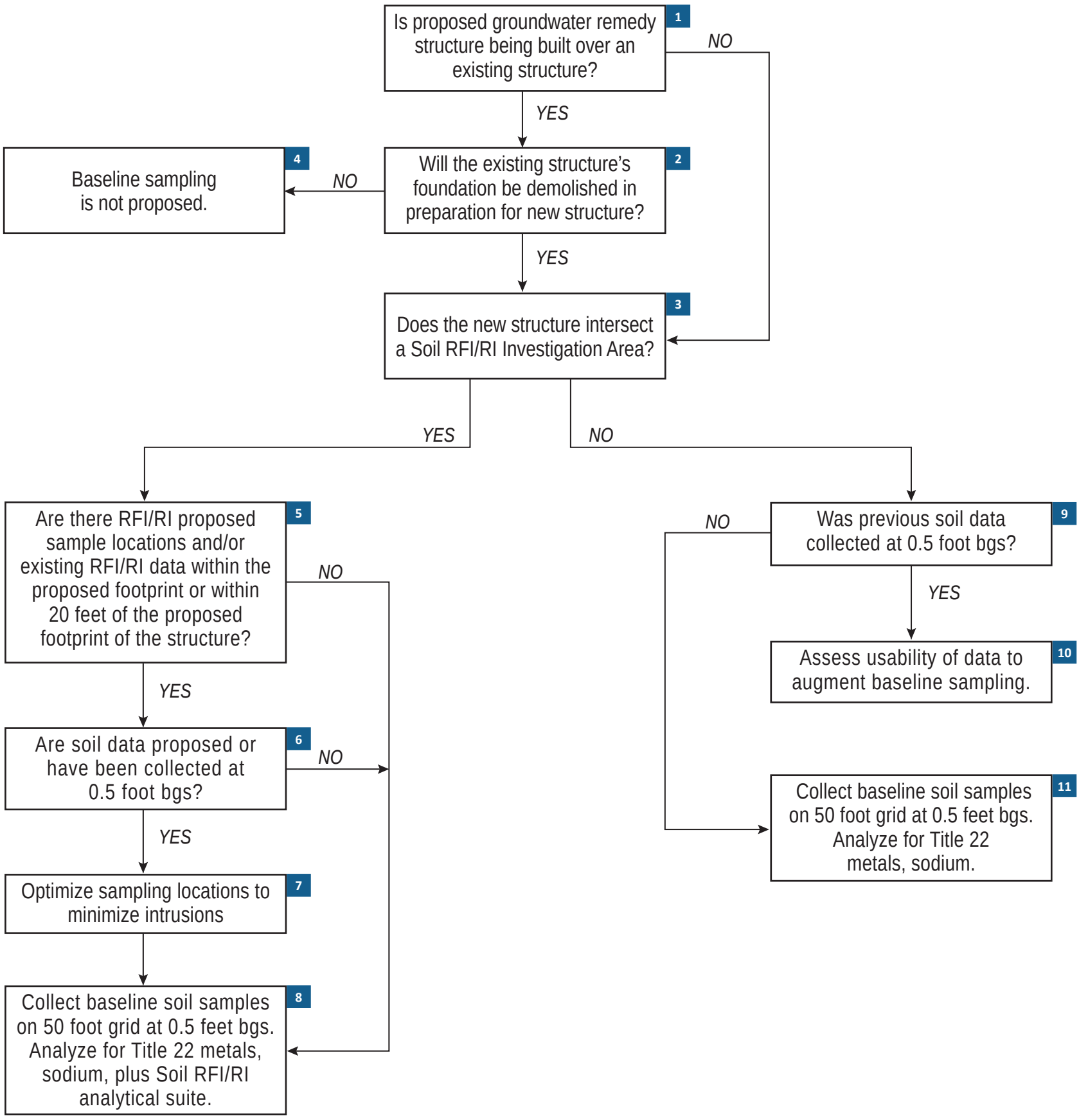

LEGEND

bgs below ground surface
RFI/RI Resource Recovery and Conservation Act Facility Investigation/Remedial Investigation

Figure A-5
Remedy Structure Baseline Sampling Decision Tree
Groundwater Remedy Implementation – Baseline Soil Sampling and Analysis Plan
Pacific Gas and Electric Company
Topock Compressor Station
Needles, California

Attachment 1
Standard Operating Procedures (SOPs)

(Provided on CD-ROM Only)

Well-SOP-01 Rev. 0

Standard Operating Procedure for Well and Borehole Permanent Decommissioning

PREPARED FOR:	Topock Groundwater Remediation Project
COPY TO:	Project File
PREPARED BY:	Pacific Gas & Electric Company
DATE:	August 27, 2014

This document defines the standard operating procedures (SOP) for decommissioning groundwater wells and boreholes associated with the Pacific Gas and Electric Company (PG&E) Topock Remediation Project, Needles, California (Site). This document was developed, in part, as a direct result of Tribal concerns that included dialog regarding future decommissioning activities at the site between PG&E, agencies, and Native American Indian Tribes (Tribes). PG&E acknowledges that the Topock Remediation Project is an area that is culturally important to the Tribes and that the activities, materials, and procedures used in this process are of specific interest. Tribes have raised concerns with drilling intrusions, well and borehole decommissioning, emplacement of foreign materials into the earth, and retention of soils displaced as a result of drilling. Based on Tribal input, the potential for use of displaced site material in the decommissioning process, which may require a variance with the applicable permitting agency, is included in this document (Section 2.2.3).

An initial draft of this SOP was submitted for review and comment by the agencies and Tribes. The comments received, PG&E responses to these comments, as well as the conclusions of discussion during a June 6, 2014 conference call regarding the PG&E responses to comments are documented in Attachment A.

This SOP will be used as a reference to guide the development of future work plans required for agency, Tribal, and stakeholder review prior to conducting all well and borehole decommissioning tasks associated with the groundwater remedy. For the purpose of this SOP, an exploratory borehole (borehole) is defined as a drilled borehole in which no casings have been installed, regardless of whether or not the borehole was drilled to the water table. However, California boreholes drilled to the water table must be decommissioned per water well standards. The technical procedures included in this SOP are based on applicable regulatory and project-specific guidance information; however, specific work plans for well decommissioning tasks are necessary to evaluate task-specific details and ensure overall compliance. The structure of the SOP has been developed to provide adequate flexibility such that it can be applied to different well types and sizes in a variety of environmental settings. Specifically, this SOP provides a summary of the following key criteria that must be considered when developing a scope of work to decommission a well or exploratory borehole:

- Regulatory information and project-specific resources
- General technical specifications and procedures used for well or borehole decommissioning
- Evaluation of the well or borehole decommissioning scenarios

1.0 Summary of Guidance Information

Multiple sources of guidance information must be considered prior to conducting well or borehole decommissioning activities. Groundwater wells at the Site are located in the states of California and Arizona. Both states regulate the minimum specifications and procedures for the decommissioning of groundwater monitoring and supply wells to protect the quality of groundwater. Further, project-specific documents provide additional guidance related to sensitive cultural and biological resources. A summary of key regulatory information (project-specific applicable or relevant and appropriate [ARAR] numbers are provided) and project-specific resource documents associated with conducting groundwater well or borehole decommissioning activities is provided in the following subsections.

1.1 Regulatory Information – California (ARAR #98)

Statewide minimum standards for decommissioning a groundwater well in the State of California were established by the California Department of Water Resources (DWR) in the California Well Standards. The California Well Standards were originally established in Bulletin 74 (February 1968), later re-written as Bulletin 74-81 (December 1981), and later supplemented by Bulletin 74-90 (June 1991). The DWR states that the California Well Standards may not be sufficient for local conditions and local permitting agencies may need to adopt more stringent standards to ensure groundwater quality protection. However, The County of San Bernardino is the local permitting agency for Site wells located in California and have adopted the DWR standards.

The California Well Standards identify well destruction (or decommissioning for this SOP) requirements for both water supply wells (Part III of Bulletin 74-81), and monitoring wells and exploratory boreholes[1] (Part III of Bulletin 74-90). Although San Bernardino County does not require permits for the decommissioning of boreholes that do not reach the water table, DTSC has stated that they may request that some exploratory boreholes that do not reach the water table be decommissioned as wells under certain circumstances. For example, a borehole that terminates within 10 to 20 feet the water table and is located in an area where the potential for infiltration (e.g., wash channels) or future spills (e.g., an area of active industrial operations) is greater. The general requirements for both well types are similar; however, special considerations for monitoring wells and exploratory boreholes address the potential for these well types to be in areas of known or potential pollution or contamination.

1.2 Regulatory Information – Arizona (ARARs #48 and #49)

Development of rules for adopting standards for the construction and abandonment (or decommissioning for this SOP) of a groundwater well in the State of Arizona are required under Arizona Revised Statute 45-594(A). In response to the statute, the Arizona Department of Water Resources (ADWR), adopted the Well Abandonment Rule. The Well Abandonment Rule as Arizona Administrative Code (A.A.C) R12-15-816 was originally established on March 5, 1984. An amendment to the rule was effected on June 18, 1990. The Well Abandonment Rule requires that the abandonment (decommissioning) of a well be accomplished through filling or sealing the well so as to prevent the well from allowing the vertical movement of water. The rule contained general guidance for the decommissioning process, but lacked specific information regarding applicable aquifer conditions, and for the depths, types of materials and methods for the well decommissioning. ADWR provided additional written guidance for well abandonment to comply with A.A.C. R12-15-816(G) in the Well Abandonment Handbook on October 3, 2008.

The Well Abandonment Handbook (WAH) provides a standard well decommissioning method to be used for the post-installation of any well or borehole, regardless of the aquifer or vadose zone conditions applicable to the well (Section IV A). In addition, the WAH details five alternative abandonment methods. The five alternatives are for specific vadose zone and aquifer conditions which may include contamination, single or multiple aquifers, or dry wells (Section IV B). For example, Alternative 4, which applies to wells that only penetrate a single aquifer without vertical flow components and no water quality contamination issues, might be applicable to wells in the Topock area that are 8-inches or greater in diameter. A variance option to Alternative 4 permits the use of clean fine sand to fill the well being decommissioned.

Legal authorization from the ADWR is required to decommission most types of wells in the State of Arizona. ADWR requires a statewide decommissioning form to be filed and reviewed prior to decommissioning. The notice of intention to abandon a well (NOIA) can be obtained from the ADWR Groundwater Management Support Section in Phoenix or other local offices. In addition, all forms are available online at http://www.azwater.gov/azdwr/WaterManagement/NOI/documents/PermitsFormsApplicationsNOI.htm. The permit must be signed and filed by the well owner. The information on the NOIA must include a well construction diagram with proposed decommissioning specifications; casing type, description of the proposed method of decommissioning (over-drilling, jacking, perforation, etc.); a description of the method of emplacing sealing or fill materials; and the specific type and estimated amount of grout material to be used (water-cement ratio, water-

[1] San Bernardino County does not require permits for the installation or decommissioning of boreholes that do not reach the water table.

bentonite ratio and/or other materials or additives used). ADWR performs a completeness and substantive review of the NOIA to determine whether the proposed abandonment methods and materials meet the requirements of the ADWR abandonment rule in R12-15-816(G). If an alternative method of decommissioning is proposed in lieu of the standard method, further substantive review is performed by ADWR to verify that the proposed methods apply, and whether appropriate fill materials were chosen. A proposal to use an alternative decommissioning method requires an application to ADWR for a variance from the well decommissioning rule (a deviation from the standard decommissioning method). Following ADWR confirmation that the proposed well decommissioning methods and materials meet the requirements of the rule, a well decommissioning authorization card is mailed to the designated well drilling contractor and well decommissioning operations may begin.

1.3 Project-specific Resources

In addition to regulatory guidance, project specific requirements or information must be considered prior to initiating well decommissioning activities. The following is a list of documents that may be applicable:

- **Topock Well Inventory Data Package** – Inventory of wells related to the Topock Remediation Project for reference when developing specific plans for well decommissioning. This data package includes a technical memorandum, well location map, and a searchable spreadsheet of well details. As requested by DTSC, the well inventory spreadsheet (electronic file) and available well logs associated with the Topock Project will be archived on the DTSC website. This archive will be updated periodically as additional wells and boreholes are installed.
- **Environmental Impact Report (EIR) Mitigation Measures Reporting Program (MMRP)** – This document details specific compliance criteria that must be considered before, during, and after implementation of well decommissioning activities.
- **Management Protocol for Handling and Disposition of Displaced Site Material** – This document identifies the general approach and management protocols required for the handling and disposition of soil and/or rock that is displaced as a result of activities associated with the Pacific Gas and Electric Company (PG&E) Topock Remediation Project. The use of displaced site material for use in the well decommissioning process is discussed in Section 2.2.3.
- **Special Handling for Clay Material Encountered During Drilling** – As requested by the Hualapai Department of Cultural Resources, special handling procedures for drill cuttings generated from clay beds will be used in the field (this does not include clay-containing sediment mixtures, only clay beds). If clay bed(s) are encountered during drilling, then the cutting from those interval(s) will be set aside on 100% cotton muslin (dye free) for future disposition, following discussions with the Tribes. PG&E will notify the agencies and Tribes in the event clay material is encountered and separated for storage.
- **Previous Well Decommissioning Work Plans** –
  - Well PGE-6 Revised Decommissioning Work Plan (November 10, 2006).
  - Final Revised Implementation Plan for Repair of Monitoring Wells MW-38S and MW-38D and Old Well/Pipe Reconnaissance (February 11, 2011).
- **Comprehensive Environmental Response, Compensation, and Liability Act (CERCLA) Permit Exemption –** Per the November 16, 2007 Memorandum from the United States Department of the Interior, remedial actions including well decommissioning are exempt from the federal, state, and local permitting process. Since the issuance of this memorandum, the applicability of this exemption has been confirmed with the County of San Bernardino, California in February 2008 and January 2011. However, the County of San Bernardino will need to be consulted in the event a variance to the California Well Standards is required. The applicability of this exemption has not been confirmed with the State of Arizona. Regardless of the permit exemption, all work plans for decommissioning activities will be reviewed and approved by the appropriate state and federal agencies prior to implementation.

1.4 General Technical Resources

In addition to regulatory guidance and project specific information various technical resources should be considered during the development of a work plan for well or borehole decommissioning. The following is a list of documents that may be useful:

- Monitoring Well Design and Construction for Hydrogeologic Characterization. Guidance Manual for Ground Water Investigations. July 1995. State of California, Environmental Protection Agency.
- ASTM Standard D5299-99 (2005), "Standard Guidance for Decommissioning of Groundwater Wells, Vadose Zone Monitoring Devices, Boreholes, and Other Devices for Environmental Activities", ASTM International, West Conshohocken, PA, 2005, www.astm.org.
- ASTM Standard C150/C150M-12, "Standard Specification for Portland Cement", ASTM International, West Conshohocken, PA, 2012, www.astm.org.
- ASTM Standard D4380-84 (2006), "Standard Test Method for Density of Bentonitic Slurries", ASTM International, West Conshohocken, PA, 2012, www.astm.org.

2.0 General Technical Specifications and Procedures for Decommissioning Wells and Exploratory Boreholes

Monitoring wells or exploratory boreholes that are no longer useful must be properly decommissioned to ensure the quality of groundwater is protected and eliminate a possible physical hazard to humans and animals. Notification or permitting requirements should be evaluated prior to the initiation of well decommissioning activities in the field. Involved oversight agencies will be notified in advance of any decommissioning activities to ensure concurrence with decommissioning of a particular well(s). The general process for decommissioning a well at the Topock site is presented on Figure 1, Well Decommissioning Decision Protocol. The information provided in this section is intended to be applicable for wells or boreholes located in either California or Arizona; however, it is assumed that the details included in the specific work plan(s) will be designed in compliance with the appropriate state regulations, and reviewed by the appropriate permitting agency. In addition, depending on the condition of the aquifer and well(s) subject to decommissioning, potentially applicable variance options that include the minimization of the placement of sealing material should be evaluated with the lead agencies during well decommission work plan development (e.g., Arizona Alternative 4 – variance option). A discussion of the primary steps identified in this protocol, including the potential materials and methods required for each, is presented in the following subsections.

2.1 Evaluation of Well or Borehole

Key well or borehole information should be assembled and reviewed prior to initiating decommissioning activities to determine lithologic and well construction details, the current condition of the well or borehole, soil and water quality information, applicable regulatory criteria, and identification of the procedures and materials that should be used. The majority of this information will be available through review of drilling and well installation information, the Topock Well Inventory, groundwater sample collection logs, or other related documents. The Topock Well Inventory can be found online at: http://dtsc-topock.com/sites/default/files/Topock-Well-Inventory_Tech-Memo.pdf. However, it is possible that additional survey of the given well or borehole will be required to obtain all key information. The following is a list of survey techniques that may be utilized to evaluate the condition of well or borehole (list is not intended to be all-inclusive):

- Well measurement – Evaluation of the depth to the bottom of, or the depth to water within, a well or borehole. This is typically accomplished using a graduated measuring tape with a water sensor or blunt weight at the end.
- Video survey – An in-well video camera can be used to evaluate the condition of the well casing and screen, and identify obstructions. In-well cameras are typically calibrated for depth and orientation (i.e. north, south, east and west), and deployed on a cable using a winch.

- Geophysical survey – Depending on the well casing type, depth to water, potential presence of metallic centralizers or other well construction components, and other variables, select geophysical survey tools may be useful. Similar to an in-well camera, in-well geophysical tools are deployed on a cable using a winch. While not a complete list, examples of geophysical tools that may be useful include:
  - Acoustic (Cement Bond Log) – Used to determine the quality of cement bonding in cased or sealed wells.
  - Gamma – Used to determine intervals of bentonite seals and gravel pack.
  - Caliper – Used to verify diameter of the well or borehole, which is used to calculate borehole and well casing volumes, and identifies obstructions or areas of borehole washout or constriction.
  - Casing Inspection Thickness Measurement (CITM) – An in well survey that uses electromagnetic waves to measure well casing wall thickness in carbon based steels. Survey can be used to understand or measure the integrity of the well casing.

2.2 Identification of Materials and Placement Requirements

Different types of materials are required for different well or borehole decommissioning scenarios depending on above-ground, and subsurface environment. Sealing materials are required when the potential for flow of water through the material must be kept to an absolute minimum such that the volume of water and possible pollutants and contaminants passing through them will be of minimal consequence (no material is completely impervious). Filler material is permitted for use under some circumstances when the flow of water through the material is not of critical concern. Potential materials suitable for use during well and borehole decommissioning at the Topock site and associated placement requirements are listed in the following subsections.

2.2.1 Sealing Material

Conventional sealing activities are performed with the objective of completely filling the borehole or well casing, voids in the formation in the vicinity of the borehole, and if not over-drilled, the gravel pack and annular spaces. Sealing materials are required for use when decommissioning wells and boreholes regardless of whether they are located in an area of known or potential pollution or contamination. In uncontaminated areas where the well is wholly situated in unconsolidated material in an unconfined groundwater zone, the sealing material is focused in the upper 20 feet of the well or borehole to prevent the infiltration of potential surface contamination. In areas of known or potential soil or groundwater contamination, sealing material is required throughout the entirety of the well or borehole. The following is a list of sealing materials that may be used at the Topock site:

- Neat cement – Compose entirely of Type II/V Portland cement grout with up to 6% bentonite powder.
- Sand-cement grout – Composed of Portland cement with no more than two parts sand to one part cement by weight of sand.
- Concrete – Composed of Portland cement and aggregated mixed at a ratio of at least 564 lbs. of cement per cubic yard of aggregate. Aggregate used must be smaller than 1/5 of the radial thickness of the annular seal and is typically reserved for large volume/diameter borehole or well decommissioning.
- Bentonite clay – Composed of commercially prepared, powdered, granulated, pelletized, or chipped/crushed sodium montmorillonite clay with the largest dimension of pellet or chip being less than 1/5 the radial thickness of the annular seal. Bentonite cannot be used as a sealing material opposite zones of fractured rock, unless otherwise approved by lead agencies. As bentonite seals may have a tendency to dry, shrink and crack in arid and semi-arid areas where subsurface moisture levels can be low, they are not recommended for sealing the vadose zone at the Topock site. In addition, bentonite is not recommended for application in high TDS environments (e.g., >5,000 parts per million) due to the adverse effects on its ability to properly swell and seal in these conditions.

According to Arizona and California Well Standards, drilling mud or cuttings are not acceptable sealing materials.

Water used for the preparation of sealing materials should be potable, compatible with the type of sealing material used and free of contaminants and suspended matter. All manufacturers' specifications for mixture

volumes and curing times must be strictly followed (typically, ASTM C150, Standard Specification for Portland cement). Further, the use of any additives must comply with the requirements of ASTM C494 (Standard Specification for Chemical Admixtures for Concrete).

Sealing material must be placed into a well or borehole at the required interval(s) in one continuous decommissioning operation, which may include multiple lifts of sealant, using methods that prevent the free-fall, dilution, and/or separation of aggregates from the cementing materials. Typically, fluid sealing material is placed using a tremie pipe with positive displacement pumping (pumped under pressure), beginning at the bottom of the sealed interval with the end of the tremie pipe submerged two feet or more below the surface of the grout during placement. When using a tremie pipe, if sealing material is placed throughout the well or borehole, static water is either displaced out of the top by the injected column of sealing material, or into the formation (applicable SOPs for waste management/spill containment will followed). Alternatively, fluid sealing material may need to be pumped into the well under pressure, using the well casing as the conduit. In this case the static water and the sealing material are forced into the voids of the well/borehole and formation. When fluid sealing material is placed under pressure, the pressure must be maintained long enough for the sealing material to cure, as applicable. Dry sealing material, such as bentonite chips or pellets, are typically placed by using a tremie pipe or the well casing as a conduit. Dry sealing materials require water for hydration and proper sealing. Regardless of sealing material type or placement method, verification shall be made that the volume of the material placed in the well or borehole is at least equal to the calculated volume of void space to be sealed.

2.2.2 Filler Material

Filler materials are permitted for use in select portions of the decommissioned well or borehole when located in uncontaminated areas. Suitable filler materials include clay, silt, sand, gravel, crushed stone, native soils, mixtures of the aforementioned types, as well as sealing materials defined above. However, materials containing organic matter are not acceptable.

Filler material must be placed into the well or borehole from the bottom up, such that bridging does not occur and the entire void space is filled. To assure that bridging has not occurred during placement, verification shall be made that the volume of the material placed in the well or borehole (with appropriate porosity assumptions) is at least equal to the calculated volume of void space to be filled (i.e., empty hole).

2.2.3 Displaced Site Material

As discussed in Section 1.3 (Management Protocol for Handling and Disposition of Displaced Site Material), soil and rock that are displaced as a result of the Topock Remediation Project may be retained on site for future use. One of the potential reuses for this material identified in the management protocol is replacement into borings. If the material was generated as drill cuttings, then lead agencies must agree that the material can be used as a component of either sealing or filler material for the purpose of well or borehole decommissioning (a variance may be required).

The requirements for placement of displaced site material, should it be deemed appropriate for use based on physical and chemical composition, are the same as that for filler material. Additional processing of the displaced material may be required to ensure that grain size requirements are met, that the material is free of organic matter, and that the material can be practicably placed into the well or borehole (i.e., prevent bridging). This processing may require the use of heavy equipment for grading or crushing the material so that it is suitable for use in the decommissioning process. An appropriate onsite location would need to be identified if such processing were required.

2.3 Well or Borehole Decommissioning Scenarios

Following evaluation of the well or borehole and in coordination with lead agencies, it must be determined if the well can be decommissioned in place (with or without modification) or if the well materials must be removed. The following subsections define the decommissioning scenarios that may apply pending completion of the well evaluation and coordination with lead agencies, responsible agencies (San Bernardino County or Arizona

Department of Water Resources), affected land owner, Tribes, and other stakeholders. Artesian groundwater conditions have not been observed at the Topock site, and therefore, are not considered in this SOP.

All wells associated with the Topock Remediation Project are considered to be in non-urban areas. When developing work plans that include well or borehole decommissioning, lead and responsible agencies (San Bernardino County) in California will be consulted to confirm this assumption. For the purpose of this SOP, well or borehole decommissioning scenarios are presented for two types of well site environments. These environments, Type 1 and Type 2, are defined as:

- Type 1 Well Environment – A well classified as Type 1 is located outside the area of known or potential soil or groundwater contamination (e.g., as determined by the soil and/or groundwater quality data available for the location or the likelihood of a future release in the area) and is not located in an area that is subject to increased surface water infiltration relative to nearby upland areas (e.g., channel of Bat Cave Wash).
- Type 2 Well Environment – A well classified as Type 2 is located in an area of known or potential soil or groundwater contamination (e.g., as determined by the soil and/or groundwater quality data available for the location or the likelihood of a future release in the area) and/or in an area that is subject to increased surface water infiltration relative to nearby upland areas (e.g., channel of Bat Cave Wash). Any wells located on the Topock Compressor Station, within wash channels, within areas of concern (AOCs), or within/adjacent to roads are in a Type 2 environment.

Three approaches to well and borehole decommissioning, including one approach that would require the approval of a variance to the California Well Standards, were presented by DTSC as draft concepts for discussion during the January 19, 2012 TWG Meeting. This information is provided as Attachment B to this SOP for consideration when developing future work plans that involve borehole or well decommissioning. The overriding consideration for the variance scenario presented in Attachment B was that the decommissioning method would provide seals that had a net permeability equal to or less than the naturally occurring geologic materials encountered along the borehole.

2.3.1 Exploratory Borehole

Typically, exploratory boreholes at the Topock site are installed as part of a data collection effort (i.e., lithologic, soil or groundwater sample collection) and are immediately decommissioned once the data collection objectives for that borehole have been achieved. Therefore, the borehole is typically decommissioned while the drilling tools or casing is still in place, prior to demobilization from that borehole. The following general procedure should be followed for decommissioning an exploratory borehole:

1. Evaluate the borehole for obstructions immediately prior to conducting decommissioning activities. If an obstruction is encountered that will prevent successful sealing of the borehole, attempts must be made to remove it prior to placement of the sealing material.
2. Place sealing material from total depth to ground surface. Typically, sealing material will be placed using a tremie pipe with positive displacement pumping. Industry practice is to place sealing material from total depth to the ground surface. However, if the boring is not within an area of known or potential pollution or contamination as determined by the soil and/or groundwater quality data available for the borehole, evaluate using displaced site material, or filler material if displaced site material is not available or appropriate, in lieu of sealing material in the upper 5 to 10 feet of the borehole. The use of displaced site material or filler material may require a permit variance if the borehole reached the water table.
3. Verify that the resulting condition of the borehole opening at the surface does not present a physical hazard to humans or animals. If voids are present fill voids created with displaced site material, or filler material if displaced site material is not available or appropriate.

2.3.2 Decommissioning a Well in Place

Wells determined to have been constructed in conformance with applicable standards without indication of compromise since the time of installation may be decommissioned in place. This decommissioning option should be utilized whenever acceptable to the regulatory agencies as it represents the field procedures that are least intrusive and create the least amount of disturbance. Further, this decommissioning method is appropriate if the well is in good repair but cannot be removed (e.g., wells constructed with large diameter steel casing), or if removal would negatively influence sealing of the well (e.g., a collapse during removal). In this case the monitoring well casing and any other significant voids (i.e., pore spaces in the gravel pack), at a minimum, should be completely filled with sealing material. The following general procedure should be followed for decommissioning a well in place:

1. Conduct evaluation of the well as detailed in Section 2.1 and verify with lead agencies, responsible agencies (San Bernardino County or Arizona Department of Water Resources), affected land owner, Tribes, and other stakeholders that the well should be decommissioned in place, and whether it is in a location considered to be Type 2.
2. Evaluate well for obstructions immediately prior to conducting decommissioning activities. If an obstruction is encountered that will prevent successful sealing of the well, attempts must be made to remove it prior to placement of the sealing and/or filler material.
3. Place sealing material. Typically, if fluid sealing material is used, this will be conducted using a tremie pipe with positive displacement pumping.
    a. Type 1 Well – Evaluate using filler material in lieu of sealing material in portions of the well casing. Place sealing material from total depth to near ground surface.
    b. Type 2 Well – Place sealing material from total depth to within 5 feet of the ground surface (bgs).
4. Decommission well head.
    a. Type 1 Well – Remove all well head protection and excavate around the well casing to a depth of approximately 1 to 5 feet bgs, or as practicable. Remove all well materials to a depth of approximately 1 to 5 feet bgs, or as practicable, cap casing with sealing material such that it extends beyond the diameter of the borehole and will drain fluids away from the borehole. Backfill the void created with displaced site material, or filler material if displaced site material is not available or appropriate.
    b. Type 2 Well – Remove all well head protection and excavate around the well casing to a depth of 5 feet bgs. Remove all well materials to a depth of 5 feet bgs, cap casing with sealing material such that it extends beyond the diameter of the borehole and will drain fluids away from the borehole. Backfill the void created with displaced site material, or filler material if displaced site material is not available or appropriate.

Note that the Type 1 and Type 2 well scenarios are subtly different. While the Type 2 scenario requires the removal of all well materials to a depth of 5 feet bgs (per CA well standards), Type 1 wells do not require the removal of any well materials. The removal of well materials to a depth of approximately 1 to 5 feet bgs, or as practicable, is not required by CA well standards, but included per stakeholder comments.

2.3.3 Decommissioning a Well in Place with Modification

It may be determined that a well should be decommissioned in place, but requires modification prior to sealing. This method may be appropriate in the event well materials or an obstruction cannot be removed, clogged screen cannot be removed, or if removal would negatively influence sealing of the well. In this scenario it may be required to remove a portion of the well casing, perforate sections of the well screen or casing, or conduct other well modifications to facilitate proper sealing. The following general procedure should be followed for decommissioning a well in place when a modification is required:

1. Conduct evaluation of the well as detailed in Section 2.1 and verify with lead agencies, responsible agencies (San Bernardino County or Arizona Department of Water Resources), affected land owner, Tribes, and other stakeholders that the well should be decommissioned in place, what modification work is required, and whether it is considered to be Type 2.
2. Implement required well modification.
3. Place sealing material. The condition that warrants well modification must be evaluated to determine the method use to place the sealing material. For example, if casing perforations above the water table are required, sealing under pressure may be appropriate.
    a. Type 1 Well – Evaluate using filler material in lieu of sealing material in portions of the borehole. Place sealing material from total depth to near ground surface, or in the event casing is removed, the new top of casing depth. If a portion of the casing is removed, sealing or filler material requirements for the interval above the top of casing must be determined through discussion with lead agencies, responsible agencies (San Bernardino County or Arizona Department of Water Resources), affected land owner, Tribes, and other stakeholders.
    b. Type 2 Well – Place sealing material from total depth to within 5 feet of the ground surface (bgs). If a portion of the casing is removed, sealing or filler material requirements for the interval above the top of casing must be determined through discussion with lead agencies, responsible agencies (San Bernardino County or Arizona Department of Water Resources), affected land owner, Tribes, and other stakeholders.
5. Decommission well head.
    a. Type 1 Well –Remove all well head protection and excavate around the well casing to a depth of approximately 1 to 5 bgs, or as practicable. Removal all well materials to a depth of approximately 1 to 5 feet bgs, or as practicable, cap casing with sealing material such that it extends beyond the diameter of the borehole and will drain fluids away from the borehole. Backfill the void created with displaced site material, or filler material if displaced site material is not available or appropriate.
    b. Type 2 Well – Remove all well head protection and excavate around the well casing to a depth of 5 bgs. Removal all well materials to a depth of 5 feet bgs, cap casing with sealing material such that it extends beyond the diameter of the borehole and will drain fluids away from the borehole. Backfill the void created with displaced site material, or filler material if displaced site material is not available or appropriate.

2.3.4 Decommissioning a Well by Removing Well Materials

In some cases a well may be decommissioned by complete removal of the well materials. This method may be appropriate in the event a well was not constructed in accordance with applicable standards and the deficiencies may prevent the proper sealing of the well, even with modification. Further, when removal is practicable, lead agencies, responsible agencies (San Bernardino County or Arizona Department of Water Resources), affected land owner, or other stakeholders may determine this method preferable to others. Removal is typically conducted by over-drilling the existing well materials with larger diameter drilling tools. Typically, this method is only applied to wells constructed with polyvinyl chloride (PVC) casing or limited lengths of smaller diameter steel casing. Other methods of casing removal (e.g., hydraulic casing jacks) may be useful to remove limited lengths of larger diameter steel casing. The following general procedure should be followed for decommissioning a well by removing the well materials:

1. Conduct evaluation of the well as detailed in Section 2.1 and verify with lead agencies, responsible agencies (San Bernardino County or Arizona Department of Water Resources), affected land owner, Tribes, and other stakeholders that the well should be decommissioned by removal.
2. Remove well materials. Typically, this is conducted by over-drilling or in some cases by combination of the use of hydraulic casing jacks combined with over-drilling.

3. Evaluate borehole for obstructions immediately prior to conducting decommissioning activities. If an obstruction is encountered that will prevent successful sealing of the borehole, it must be removed prior to placement of the sealing material.
4. Place sealing/filler material from total depth to ground surface. Typically, this will be conducted using a tremie pipe with positive displacement pumping. Industry practice is to place sealing material from total depth to the ground surface. However, if the boring is not within an area of known or potential pollution or contamination, evaluate using filler material in lieu of sealing material in portions of the borehole.
5. Decommission remaining elements of the well head protection and fill voids created with displaced site material, or filler material if displaced site material is not available or appropriate.

Other methods may be employed for removal of the well, particularly for steel well materials and steel conductor casings used to seal off upper lithologic zones. Specifically, the well string (or conductor casing) may be pulled by jacking with external equipment, or with the drill rig. Once the well string is removed from the borehole, the remaining materials in the original borehole should be over-drilled to remove them from the formation.

2.4 Well Decommissioning Reporting

Following completion of well decommissioning tasks, reporting of field activities must be completed in compliance with the lead agencies requirements. In addition, project-specific reporting must be completed (as required) and the Topock Well Inventory must be updated to reflect the results of decommissioning activities. The timeline for reporting requirements will be specified in the project-specific work plan. The Well Decommissioning Report will be submitted to lead agencies no later than 90 days after completion of well decommissioning activities and will include, at a minimum:

- A summary of the approval process completed prior to well decommissioning, including reference to submitted work plans, subsequent communication and modifications (as applicable) and documentation of approval to proceed;
- Discussion regarding application of the Well Decommissioning Decision Protocol;
- Details of the work performed, including explanation of the applicable well decommissioning scenario and materials utilized;
- Documentation of compliance with applicable permitting requirements, and;
- Signature and seal of an appropriately licensed professional geologist or engineer.

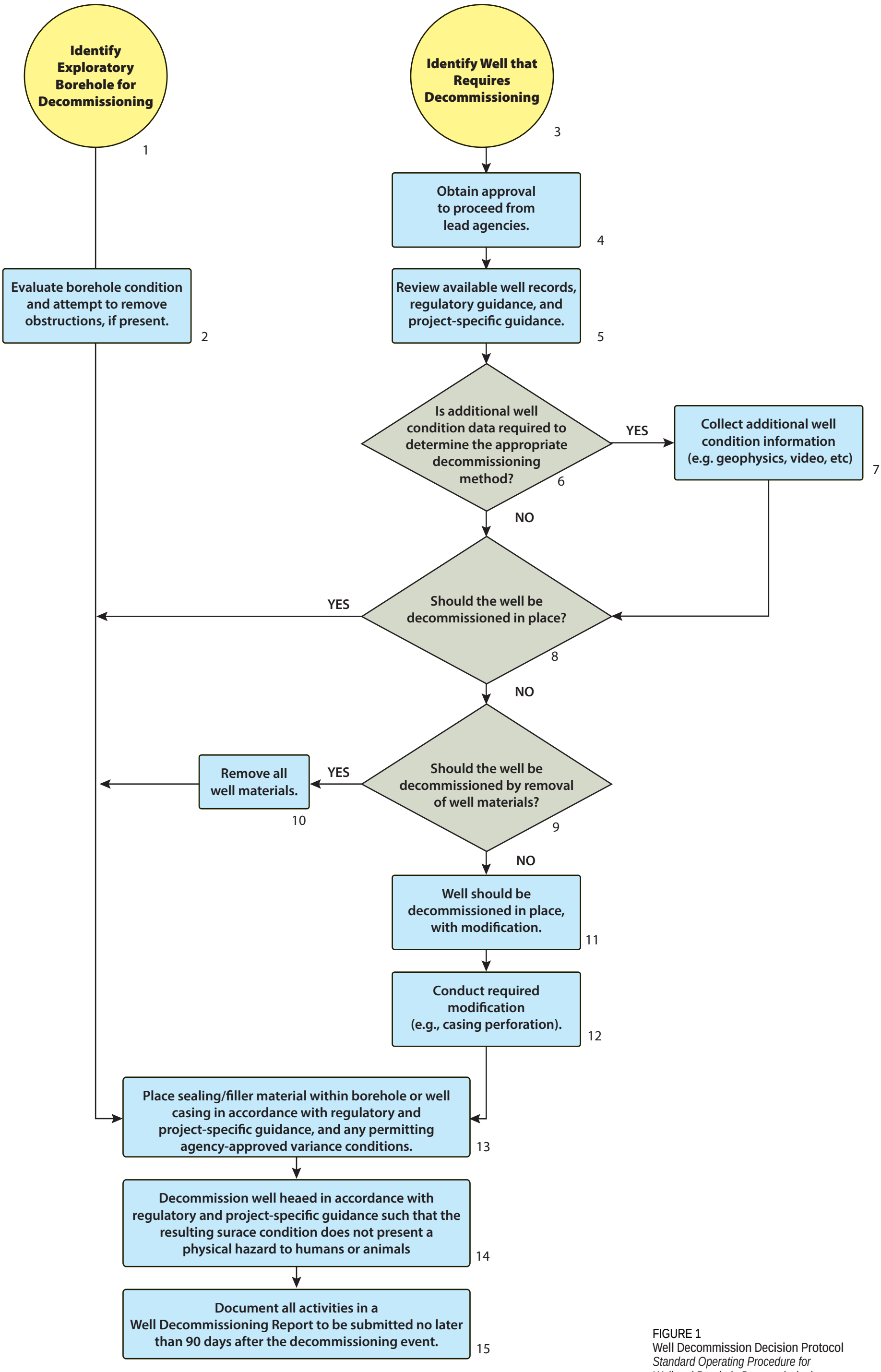

FIGURE 1
Well Decommission Decision Protocol
Standard Operating Procedure for
Well and Borehole Decommissioning
PG&E Topock Compressor Station
Needles, California

Attachment A
Responses to Comments on Draft *Standard Operating Procedure for Well and Borehole Decommissioning*

Responses to Comments on *Standard Operating Procedure for Well and Borehole Decommissioning*, Pacific Gas and Electric Company, Topock Compressor Station, Needles, California

Absolute Comment No.	Comment Source/Number	Section	Reference Text	Comment	Response	Summary of June 6, 2014 RTC Discussion
1	Arizona Department of Water Resources (ADWR) February 28, 2013 Letter ADWR-1			The text in the Standard Operation Procedure (SOP), section 1.2 states that all required forms can be obtained from the Phoenix ADWR offices. All forms are available online at: http://www.azwater.gov/iazdwr/WaterManagement/NOI/documents/PermitsFormsApplicationsNOI.htm	The text in **bold** will be added to the following statement. The notice of intention to abandon a well (NOIA) can be obtained from the ADWR Groundwater Management Support Section in Phoenix or other local offices. **In addition, all forms are available online at:** http://www.azwater.gov/iazdwr/WaterManagement/NOI/documents/PermitsFormsApplicationsNOI.htm	No additional comments.
2	ADWR-2			The SOP document describes requirements for abandoning (decommissioning) wells in Arizona and California and technical specifications and procedures for abandoning wells at the Topock Compressor Station remediation site. The proposed methods are thorough, protective of the aquifer, and consistent with minimum well construction and abandonment requirements in Arizona Administrative Code (A.A.C.) R12-15-816 and substantive policy described in the ADWR "Well Abandonment Handbook" (2008).	PG&E appreciates the review and input from ADEQ and ADWR on this SOP.	No additional comments.
3	ADWR-3			The proposed methods suggested for abandoning exploratory boreholes in Arizona utilizing "granulated material" are satisfactory. The methods are consistent with the variance option of Alternative 4 in the "Well Abandonment Handbook". Notices of Intent to Abandon a Well must be accompanied with a written request for a variance from the provisions of the minimum well construction and abandonment standards and in accordance with A.A.C. R12-15-820.	This comment is specific to the *Revised Implementation Plan for Evaluation of Alternative Freshwater Sources in the Topock Remediation Project Area, Pacific Gas and Electric Company, Topock Compressor Station, Needles, California* (January 28, 2013). However, as noted by the Fort Mojave Indian Tribe in comment FMIT-6, this represents an example of successful application of a variance to the standard well decommissioning procedure in Arizona. This variance was approved by ADWR based on project-specific information about the condition of the aquifer and planned boreholes (not a well in this example). PG&E anticipates similar discourse with the regulatory agencies based on future project-specific information in the development of future well decommissioning work plans.	No additional comments.
4	Department of Toxics Substances Control (DTSC) Document edits in redline strikeout DTSC-1	2nd paragraph	However, California boreholes drilled to the water table must be decommissioned per water well standards.	[DTSC Comment CG1]: Revise text. Clarify that an exploratory borehole drilled to the water table in California must comply with well decommissioning standards. Underlined text indicates new text inserted into document.	The text in **bold** will be added to the following statement. For the purpose of this SOP, an exploratory borehole (borehole) is defined as a drilled borehole in which no casings have been installed, regardless of whether or not the borehole was drilled to the water table. **However, California boreholes drilled to the water table must be decommissioned per water well standards.**	No additional comments.
5	DTSC-2	1.1	[1.] San Bernardino County does not require permits for the installation or decommissioning of boreholes that do not reach the water table.	[DTSC Comment CG2]: Please note that DTSC may request that some exploratory boreholes that do not reach the water table be decommissioned as wells under certain circumstances (e.g., deep boreholes that almost reach the water table). Please incorporate this concept into the SOP.	The text in **bold** will be added to the following statement. The California Well Standards identify well destruction (or decommissioning for this SOP) requirements for both water supply wells (Part III of Bulletin 74-81), and monitoring wells and exploratory boreholes[1]. **Although San Bernardino County does not require permits for the decommissioning of boreholes that do not reach the water table, DTSC has stated that they may request that some exploratory boreholes that do not reach the water table be decommissioned as wells under certain circumstances. For example, a borehole that terminates within 10 to 20 feet the water table and is located in an area where the potential for infiltration (e.g., wash channels) or future spills (e.g., an area of active industrial operations) is greater.**	No additional comments.

Absolute Comment No.	Comment Source/Number	Section	Reference Text	Comment	Response	Summary of June 6, 2014 RTC Discussion
6	DTSC-3	1.3	However, the County of San Bernardino will need to be consulted in the event a variance to the California Well Standards is required.	[DTSC Comment CG3]: As the SOP is now sufficiently developed, it is important to have San Bernardino review the next version and provide input as they are a key decision maker regarding well decommissioning.	After PG&E response to comments from ADWR, DTSC, Fort Mojave Indian Tribe and the Hualapai Dept of Cultural Resources included in this table have been addressed and discussed by the Well Decommissioning Subgroup, a draft of this SOP will be submitted to the County San Bernardino for their review and input.	No additional comments.
7	DTSC-4	2.0	Involved oversight agencies will be notified in advance of any decommissioning activities to ensure concurrence with decommissioning of a particular well(s).	Underlined text indicates new text inserted into document.	The proposed text has been added to the document.	No additional comments.
8	DTSC-5	2.1	drilling and well installation information	[DTSC Comment YA4]: A repository of drilling logs and installation notes should be put into a central archive for access by involved stakeholders.	Drilling logs and installation notes, where available, have been included in various documents submitted to the agencies following field work. As specific well decommissioning work plans are developed, this information will be included in those plans. **Further, as requested by DTSC, the well inventory spreadsheet (electronic file) and available well logs associated with the Topock Project will be archived on the DTSC website. This archive will be updated periodically as additional wells and boreholes are installed.** The text above in **bold** will be added to Section 1.3, first bullet (Topock Well Inventory Data Package).	No additional comments.
9	DTSC-6	2.1	Topock Well Inventory	[DTSC Comment CG5]; Include the current Topock Well Inventory as an electronic attachment to this SOP.	The text in **bold** will be added to the following statement. The majority of this information will be available through review of drilling and well installation information, the Topock Well Inventory, groundwater sample collection logs, or other related documents**. An electronic copy of the Topock Well Inventory has been included in this SOP under Attachment A.**	No additional comments.
10	DTSC-7	2.1	Geophysical survey – Depending on the well casing type, depth to water, presence or absence of centralizers, and other variables, select geophysical survey tools may be useful.	Underlined text indicates new text inserted into document.	The modified text in **bold** will be added to the statement. Geophysical survey – Depending on the well casing type, depth to water, **potential presence of metallic centralizers or other well construction components**, and other variables, select geophysical survey tools may be useful.	No additional comments.
11	DTSC-8	2.2.1	Bentonite cannot be used as a sealing material opposite zones of fractured rock, unless otherwise approved by lead agencies (DTSC/DOI).	Underlined text indicates new text inserted into document. Deleted text includes "the permitting" agency. Subsequent comment from DTSC regarding when bentonite is appropriate as a sealing material…	The proposed edit has been incorporated into the document. In addition, based on subsequent discussion with DTSC, the following text in **bold** has been added to Section 2.2.1, fourth bullet (bentonite clay): **In addition, bentonite is not recommended for application in high TDS environments (e.g., >5,000 parts per million) due to the adverse effects on its ability to properly swell and seal in these conditions.**	No additional comments.
12	DTSC-9	2.2.3	If the material was generated as drill cuttings, then lead agencies must agree that the material can be used as a component of either sealing or filler material for the purpose of well or borehole decommissioning (a variance may be required).	[DTSC Comment CG6]: Change text as a permit exemption may be used and since DOI and DTSC will, at a minimum, be approving agencies. Underlined text indicates new text inserted into document. Deleted text includes "the permitting" agency.	The proposed edit has been incorporated into the document.	No additional comments.

Absolute Comment No.	Comment Source/Number	Section	Reference Text	Comment	Response	Summary of June 6, 2014 RTC Discussion
13	DTSC-10	2.3	Following evaluation of the well or borehole and in coordination with the lead agencies, it must be determined if the well can be decommissioned in place (with or without modification) or if the well materials must be removed.	Underlined text indicates new text inserted into document. Deleted text includes "the permitting" agency.	The proposed edit has been incorporated into the document.	No additional comments.
14	DTSC-11	2.3	The following subsections define the decommissioning scenarios that may apply pending completion of the well evaluation and coordination with lead agencies, responsible agencies **(San Bernardino County or Arizona Department of Water Resources)**, affected land owner, **Tribes,** and other stakeholders.	Underlined text indicates new text inserted into document. Deleted text includes "the permitting" agency.	The proposed edit has been incorporated into the document.	Tech in **bold and underlined** in the "Reference Text" column has been added globally as requested during the call.
15	DTSC-12	2.3.2	1. Conduct evaluation of the well as detailed in Section 2.1 and verify with lead agencies, responsible agencies, affected land owner, and other stakeholders that the well should be decommissioned in place.	[DTSC Comment CG7]: The urban versus non-urban terms created concern to some tribes and distracted from the technical issues at hand. It is recommended that explicit reference to the term be minimized (see highlights in text and Figure 1). Perhaps just referencing the standards will suffice. Underlined text indicates new text inserted into document. Deleted text includes "the permitting" agency.	The proposed edit has been incorporated into the document. See response to comment DTSC-16 regarding the urban and non-urban topic. Reference June 6, 2014 RTC Discussion and what changes result (e.g. Type 1 and Type 2).	As a result of the June 6, 2014 RTC Discussion the terms "urban" and "non-urban" have been removed from the SOP. These terms have been replaced throughout with "Type 1" and "Type 2". A definition for these terms has been added to the beginning of Section 2.3. In addition, Figure 1 has been revised to include the new terminology.
16	DTSC-13	2.3.2	a. Non-urban Area – Place sealing material from total depth to near ground surface.	Yellow highlight added.	See response to comment DTSC-16.	See summary for comment DTSC-12.
17	DTSC-14	2.3.2	b. Urban Area – Place sealing material from total depth to within 5 feet of the ground surface (bgs).	Yellow highlight added.	See response to comment DTSC-16.	See summary for comment DTSC-12.
18	DTSC-15	2.3.2	c. For urban or non-urban area wells located outside an area of known or potential pollution or contamination as determined by the soil and/or groundwater quality data available for the location, evaluate using filler material in lieu of sealing material in portions of the well casing.	[DTSC Comment CG8]: Made edit assuming that well is left in place and could only fill well casing with filler or sealing material. Yellow highlight added. Underlined text indicates new text inserted into document. Deleted text includes "borehole".	The proposed edits have been incorporated into the document. See response to comment DTSC-16 regarding highlighted text.	See summary for comment DTSC-12.

Absolute Comment No.	Comment Source/Number	Section	Reference Text	Comment	Response	Summary of June 6, 2014 RTC Discussion
19	DTSC-16	2.3.2	a. Non-urban Area – Remove all well head protection and excavate around the well casing to a depth of approximately 5 feet bgs, or as practicable. Remove all well materials to a depth of approximately 5 feet bgs, or as practicable, cap casing with sealing material such that it extends beyond the diameter of the borehole and will drain fluids away from the borehole. Backfill the void created with displaced site material, or filler material if displaced site material is not available or appropriate. b. Urban Area – Remove all well head protection and excavate around the well casing to a depth of 5 <u>feet</u> bgs. <u>Remove</u> all well materials to a depth of 5 feet bgs, cap casing with sealing material <u>such that it extends beyond the diameter of the borehole and will drain fluids away from the borehole</u>. Backfill the void created with displaced site material, or filler material if displaced site material is not available or appropriate.	[DTSC Comment YA9]: Urban and non-urban decommissioning scenarios appear to be the same. If that the case, let's not differentiate between the two. Yellow highlight added. Underlined text indicates new text inserted into document.	The proposed edits have been incorporated into the document. The following text in **bold** has been added at the end of Section 2.3.2 to address the comment regarding the urban and non-urban topic: **Note that the urban and non-urban scenarios are only subtly different. While the urban scenario requires the removal of all well materials to a depth of 5 feet bgs (per CA well standards), non-urban areas do not require the removal of any well materials. The removal of well materials to a depth of approximately 5 feet bgs, or as practicable, is not required by CA well standards, but included per stakeholder comments.** To further clarify this difference in the text, bullet 4a (decommission well head, non-urban area) has been revised to indicate a range of 1 to 5 feet bgs. The same revision has been made to Section 2.3.3, bullet 4a, and Figure 1.	See summary for comment DTSC-12.
20	DTSC-17	2.3.3	1. Conduct evaluation of the well as detailed in Section 2.1 and verify with <u>lead agencies</u>, <u>responsible agencies</u>, affected land owner, and other stakeholders that the well should be decommissioned in place, what modification work is required, and whether it is in a location considered to be urban.	Underlined text indicates new text inserted into document. Deleted text includes "the permitting".	The proposed edit has been incorporated into the document.	See summary for comment DTSC-11.
21	DTSC-18	2.3.3	a. Non-urban Area – Place sealing material from total depth to near ground surface, or in the event casing is removed, the new top of casing depth. If a portion of the casing is removed, sealing or filler material requirements for the interval above the top of casing must be determined through discussion with <u>lead agencies, responsible agencies</u>, affected land owner, and other stakeholders.	Yellow highlight added. Underlined text indicates new text inserted into document. Deleted text includes "the permitting".	The proposed edit has been incorporated into the document. See response to comment DTSC-16 regarding highlighted text.	See summary for comment DTSC-12.
22	DTSC-19	2.3.3	b. Urban Area – Place sealing material from total depth to within 5 feet of the ground surface (bgs). If a portion of the casing is removed, sealing or filler material requirements for the interval above the top of casing must be determined through discussion with <u>lead agencies, responsible agencies</u>, affected land owner, and other stakeholders.	Yellow highlight added. Underlined text indicates new text inserted into document. Deleted text includes "the permitting".	The proposed edit has been incorporated into the document. See response to comment DTSC-16 regarding highlighted text.	See summary for comment DTSC-12.

Absolute Comment No.	Comment Source/Number	Section	Reference Text	Comment	Response	Summary of June 6, 2014 RTC Discussion
23	DTSC-20	2.3.3	c. For urban or non-urban area wells located outside an area of known or potential pollution or contamination, evaluate using filler material in lieu of sealing material in portions of the borehole.	Yellow highlight added.	See response to comment DTSC-16.	See summary for comment DTSC-12.
24	DTSC-21	2.3.3	a. Non-urban Area –Remove all well head protection and excavate around the well casing to a depth of approximately 5 bgs, or as practicable. Remove all well materials to a depth of approximately 5 feet bgs, or as practicable, cap casing with sealing material such that it extends beyond the diameter of the borehole and will drain fluids away from the borehole. Backfill the void created with displaced site material, or filler material if displaced site material is not available or appropriate. b. Urban Area – Remove all well head protection and excavate around the well casing to a depth of 5 bgs. Removal all well materials to a depth of 5 feet bgs, cap casing with sealing material such that it extends beyond the diameter of the borehole and will drain fluids away from the borehole. Backfill the void created with displaced site material, or filler material if displaced site material is not available or appropriate.	[DTSC Comment CG10]: See Comment YA9 above. Urban and non-urban decommissioning scenarios appear to be the same. If that the case, let's not differentiate between the two. Yellow highlight added.	See response to comment DTSC-16.	See summary for comment DTSC-12.
25	DTSC-22	2.3.4	Further, when removal is practicable, lead agencies, responsible agencies, affected land owner, or other stakeholders may determine this method preferable to others. Removal is typically conducted by over-drilling the existing well materials with larger diameter drilling tools.	Underlined text indicates new text inserted into document. Deleted text includes "the permitting".	The proposed edit has been incorporated into the document.	See summary for comment DTSC-11.
26	DTSC-23	2.3.4	1. Conduct evaluation of the well as detailed in Section 2.1 and verify with lead agencies, responsible agencies, affected land owner, and other stakeholders that the well should be decommissioned by removal.	Underlined text indicates new text inserted into document. Deleted text includes "the permitting".	The proposed edit has been incorporated into the document.	See summary for comment DTSC-11.
27	DTSC-24	2.4	Following completion of well decommissioning tasks, reporting of field activities must be completed in compliance with the lead agencies requirements.	Underlined text indicates new text inserted into document.	The proposed edit has been incorporated into the document.	No additional comments.
28	DTSC-25	2.4	The Well Decommissioning Report will be submitted to lead agencies no later than 90 days after completion of well decommissioning activities.	Underlined text indicates new text inserted into document.	The proposed text and text deletions have been incorporated into the document.	No additional comments.
29	DTSC-26	Figure 1	Between steps 3 and 4	Insert step: "Obtain approval to proceed from lead agencies"	The proposed revision to Figure 1 has been incorporated.	

Absolute Comment No.	Comment Source/Number	Section	Reference Text	Comment	Response	Summary of June 6, 2014 RTC Discussion
30	DTSC-27	Figure 1	After step 13	Insert step: "Document all activities in a Well Decommissioning Report to be submitted no later than 90 days after the decommissioning event.	The proposed revision to Figure 1 has been incorporated.	
31	DTSC-28	Figure 1	Step 12	Delete "e.g., urban area vs. non-urban area" within the brackets.	The proposed revision to Figure 1 has been incorporated.	
32	Hargis + Associates, Inc. Fort Mojave Indian Tribe (FMIT) April 19, 2013 Letter FMIT-1	General	No specific text.	The Tribe has asked for and supported this effort to proceduralize the decommissioning of the physical intrusions into the landscape created by the drilling of wells and boreholes. Nevertheless, the alternatives available for the decommissioning procedure remain hurtful as they represent a permanent disfiguration of the hallowed landscape across which the project will be constructed. Basically, once a well/borehole is in place, the options for decommissioning involve either the emplacement of foreign, unnatural materials in place of the materials emplaced for during well construction/operation, or attempting to destroy the original downhole materials. In the process of well destruction, however, an even greater disturbance results. Neither option is attractive to the Tribe. Avoiding further disturbances by not constructing additional wells/boreholes of course is the Tribe's preference, particularly recognizing that the cumulative number of anticipated intrusions will perhaps be 350 or more before the project is over. Nevertheless, considering the reality that more disturbances will be created as a result of the remedy, the Tribe emphasizes that flexibility must be maintained. The decision as to how to proceed with decommissioning will necessarily be case-specific and requires advance discussions and consultations with the Tribes.	Comment noted. PG&E has drafted this SOP in coordination with the agencies and Tribes to meet regulatory requirements and minimize both disturbance and the placement of foreign materials. PG&E anticipates further discussions with and input from the Tribes on future work plans, as well as consultation with Tribes in accordance with the consultation protocol detailed in the Programmatic Agreement.	
33	FMIT-2	Preface	"This document was developed as a direct result of Tribal concerns …	The preface claims that "This document was developed as a direct result of Tribal concerns …" While this is in part true, it should be acknowledged that it would have been necessary to develop and SOP for this purpose for overall project purposes anyway. The Tribal request is consistent with the ARARs identified for this action.	Comment noted. The second sentence of the first paragraph has been edited to read as follows (new text in **bold**): This document was developed**, in part,** as a direct result of Tribal concerns that included dialog regarding future decommissioning activities at the site between PG&E, agencies, and Native American Indian Tribes (Tribes).	No additional comments.
34	FMIT-3	Preface	"… use of displaced site material in the decommissioning process …"	The preface also asserts that the "… use of displaced site material in the decommissioning process …" is based on Tribal input. This again is not a possibility related to Tribal input or preference. Provisions for backfilling certain boreholes with drill cuttings is an option that is commonly exercised, such as for exploratory borings. Nevertheless, the Tribe generally regards the earth materials removed from their natural place as a disturbance and potentially a desecration of the land. This section should probably also reference the preparation of an SOP for the handling and disposition of soils displaced as a result of project activities.	While permits are not required for the decommissioning of exploratory boreholes that do not reach the water table, based on the regulations~~, it is not best industry practice to backfill boreholes with drill cuttings~~. The SOP for the handling of disposition of soils displaced as a result of project activities (Management Protocol for Handling and Disposition of Displaced Site Material) is referenced in Section 1.3. A reference to the use of displaced site material (Section 2.2.3) is already included in the first paragraph of the document.	The response has been revised per the discussion. Changes shown in ~~strikeout~~.
35	FMIT-4	Preface	"exploratory borehole."	The preface offers a definition of an "exploratory borehole." Considering that the shelf life of this document is anticipated to be in excess of three decades, there should be a definition section for this term as well as others used throughout the text, such as "decommissioning," "displaced site material," "sealing material," "filler material," "monitor well," "production or extraction well," "injection well," etc. It is understood that some of these terms do not presently appear in the text, but it is necessary to establish the types of wells/boreholes to which this SOP applies. Perhaps a section further explaining the applicability and scope of this SOP is needed.	The first sentence of the second paragraph of the SOP has been revised as follows (new text in **bold**): This SOP will be used as a reference to guide the development of future work plans required for agency, Tribal, and stakeholder review prior to conducting **all** well and borehole decommissioning tasks **associated with the groundwater remedy**. Based on the revised text definition of well types would only add complexity to the SOP. The definition of "sealing material", "filler material", and "displaced site material" is provided in detail in Sections 2.2.1, 2.2.2, and 2.2.3, respectively.	No additional comments.

Absolute Comment No.	Comment Source/Number	Section	Reference Text	Comment	Response	Summary of June 6, 2014 RTC Discussion
36	FMIT-5	Section 1.0		Both California and Arizona regulatory requirements are outlined in Section 1.0, however, the respective subsections fail to mention provisions for variances within the regulations and guidance documents cited. Additionally, are there any conflicts between the rules promulgated by the two states?	Section 1.2 (Regulatory Information – Arizona [ARARs #48 and #49]) states: *If an alternative method of decommissioning is proposed in lieu of the standard method, further substantive review is performed by ADWR to verify that the proposed methods apply, and whether appropriate fill materials were chosen. A proposal to use an alternative decommissioning method requires an application to ADWR for a variance from the well decommissioning rule (a deviation from the standard decommissioning method).* The technical specifications and procedures for decommissioning well and exploratory boreholes presented in Section 2 of the SOP were developed to be in compliance with both California and Arizona regulations.	No additional comments.
37	FMIT-6	Section 1.3		Section 1.3 discusses CERCLA exemptions for permitting proposed well abandonment. It refers to various discussions with San Bernardino County authorities in this regard and further indicates that, to date, no discussions have been scheduled. It is strongly recommended that PG&E initiate the further discussions with the respective regulatory authorities in both California and Arizona. In fact, it may be advisable to familiarize the regulatory personnel with the context of this particular procedure. The Tribe notes that a preliminary exchange has been made with the Arizona Department of Water Resources (ADWR) through the Arizona Department of Environmental Quality (ADEQ) in regard to the decommissioning of borings proposed in support of exploration for a freshwater source in Arizona. The February 28, 2013, letter from ADWR addresses a proposed variance for this purpose. This seems to indicate ADWR's willingness to work with PG&E in regard to such requests. Accordingly, further liaison with these agencies may be helpful in future situations. If the Tribe can do anything to facilitate such discussions in the interest of its preferences, it stands ready to support such an effort.	PG&E appreciates the Tribe's willingness to assist with discussions with state permitting agencies related to well decommissioning variance options. PG&E anticipates holding these discussions with the agencies when future work plans that involves well decommissioning are being developed so that specific aquifer and well conditions can be contemplated in the context of potential variance options. Further, given that the groundwater remediation project is estimated to last for tens of years, the evaluation of variance options at the time each well decommissioning plan is developed will allow for potential changes in well decommissioning regulations to also be considered.	No additional comments.

Absolute Comment No.	Comment Source/Number	Section	Reference Text	Comment	Response	Summary of June 6, 2014 RTC Discussion
38	FMIT-7	Section 2.0		Section 2.0 discusses general procedures for decommissioning. Considering the subsections that follow, it appears that PG&E is targeting a specific recommendation for the well/borehole decommissioning procedure under consideration. As discussed earlier, the Tribe requires discussion and consultation on a case-by-case basis because of the variation in construction characteristics, location, and other factors that enter into the decision. Accordingly, at the outset of such discussions, the Tribe would need information in regard to the alternative procedures available for each case. This information would facilitate the Tribes' decisions on the long-term fate of the intrusions.	As stated at the beginning Section 2.0, *The information provided in this section is intended to be applicable for wells or boreholes located in either California or Arizona; however, it is assumed that the details included in the specific work plan(s) will be designed in compliance with the appropriate state regulations, and reviewed by the appropriate permitting agency.* To more clearly acknowledge that potential for well decommissioning procedures that would require a variance to the applicable state regulations, the following statement in **bold** has been added to the document after the text referenced above: **In addition, depending on the condition of the aquifer and well(s) subject to decommissioning, potentially applicable variance options that include the minimization of the placement of sealing material should be evaluated with the lead agencies during well decommission work plan development (e.g., Arizona Alternative 4 – variance option).** In addition, the following text has been added to the end of the second paragraph in Section 1.2 (new text in **bold**): *The Well Abandonment Handbook (WAH) provides a standard well decommissioning method to be used for the post-installation of any well or borehole, regardless of the aquifer or vadose zone conditions applicable to the well (Section IV A). In addition, the WAH details five alternative abandonment methods. The five alternatives are for specific vadose zone and aquifer conditions which may include contamination, single or multiple aquifers, or dry wells (Section IV B).* ***For example, Alternative 4, which applies to wells that only penetrate a single aquifer without vertical flow components and no water quality contamination issues, might be applicable to wells in the Topock area that are 8-inches or greater in diameter. A variance option to Alternative 4 permits the use of clean fine sand to fill the well being decommissioned.*** Further, the text included in box number 13 on the decision flow chart presented in Figure 1 has been revised as follows (including text strikeout per comment DTSC-28 and with new text in **bold**): Place sealing/filler material within the borehole or well casing in accordance with regulatory and project-specific guidance**, and any permitting agency-approved variance conditions**.	During the June 6, 2014 subgroup discussion, the Tribes requested that additional information on potential variance conditions that had been previously developed by DTSC be added to this SOP. Please advise if the three schematics included in new Attachment A to this SOP are appropriate and meet the intent of this comment. Thank you.
39	FMIT-8	Section 2.2		The subsections under Section 2.2 do not appear to recognize provisions for variances as discussed earlier. Indeed such scenarios need to be developed and discussions held with the respective regulatory authorities as to the acceptability, need and justifications, and technical rationale for such requests. To this point, the subcommittee has spent time on alternative conceptual designs. This SOP does not include or acknowledge this work.	The subsections under Section 2.2 simply present the different types of materials that can be used for various well or borehole decommissioning scenarios, and not is not intended to evaluate or disqualify variance well decommissioning options. See the response to FMIT-7, which adds text to more clearly acknowledge the potential for variance options.	During the June 6, 2014 subgroup discussion, the Tribes requested that additional information on potential variance conditions that had been previously developed by DTSC be added to this SOP. Please advise if the three schematics included in new Attachment A to this SOP are appropriate and meet the intent of this comment. Thank you.

Absolute Comment No.	Comment Source/Number	Section	Reference Text	Comment	Response	Summary of June 6, 2014 RTC Discussion
40	FMIT-9	Section 2.3		Section 2.3 develops different scenarios. However, these scenarios only relate to standard situations and again do not consider the possibilities of variances. The situations in which variances are appropriate and applicable for consideration need to be developed in this procedure, otherwise those following the procedure will simply adhere strictly to the content. Additionally, this section appears to only consider the California rules, which distinguish between "urban" and "non-urban" areas. This, for example, is not a relevant consideration for the Site and is not referenced in the Arizona guidelines. The design for well decommissioning should not have to be a choice between these two options.	The evaluation of scenarios in Section 2.3 were developed in consideration of both California and Arizona regulations. The distinction between urban and non-urban is subtle and has been clarified as detailed in the response to comment DTSC-16. Both California and Arizona regulations detail specific procedures depending on aquifer and well conditions. California regulations do not reference any variance conditions, while the Arizona regulations reference alternatives to the recommended standard decommissioning procedure and some variance options associated with those alternatives. Variance conditions or potential scenarios that may or may not be approved by regulatory agencies should not be included in an SOP. Also, see comment FMIT-7.	During the June 6, 2014 subgroup discussion, the Tribes requested that additional information on potential variance conditions that had been previously developed by DTSC be added to this SOP. Please advise if the three schematics included in new Attachment A to this SOP are appropriate and meet the intent of this comment. Thank you.
41	FMIT-10	Section 2.4		Section 2.4 discusses "Well Decommissioning Reporting," and specifies that the information be reported in the Topock Well Inventory. Is this information also reported in the Well Registry for the respective states?	Yes, well decommissioning reports are filed with ADWR and California DWR in accordance with the respective well standards for each state. As noted in the first sentence of Section 2.4 (including edit made in accordance with comment DTSC-24): Following completion of well decommissioning tasks, reporting of field activities must be completed in compliance with the lead agencies requirements.	No additional comments.
42	FMIT-11	Figure 1		Figure 1 needs to be changed to reflect the above comments.	See response to comment FMIT-7.	No additional comments.
43	Hualapai Department of Cultural Resources (HDCR) April 24, 2013 Letter HDCR-1			On behalf of the Hualapai Tribe, we feel that is very important to have minimal disturbance in an area that has been under constant environmental change due to the operations of the Topock Compressor Station. As wells and well materials are intrusive, we feel that it is best that all well casings be left in-situ when and if wells are to be decommissioned. This will be the least intrusive and create the least amount of disturbance.	PG&E agrees that the decommissioning procedure which involves the least amount of disturbance that is acceptable to the regulatory agencies should be implemented. The following text in **bold** has been added to Section 2.3.2 (Decommissioning a Well in Place): **This decommissioning option should be utilized whenever acceptable to the regulatory agencies as it represents the field procedures that are least intrusive and create the least amount of disturbance.**	No additional comments.
44	HDCR-2			In the process of decommissioning, Hualapai prefer that natural materials from the immediate vicinity be placed inside the well-casings, and that wells be capped with the least amount of invasive materials, i.e. concrete, steel bolts, etc. As wells come under the decommissioning process, Hualapai would like to be informed about each well that is going to be subject to decommissioning.	See response to comment FMIT-1 regarding consultation with the Tribes on future work plans, and FMIT-7 regarding clarifying information that is being added to the document to acknowledge the potential for variance conditions.	No additional comments.

Attachment B
Draft DTSC Concepts for Well and Borehole Decommissioning

Category 1: Contaminant Free – No Variance

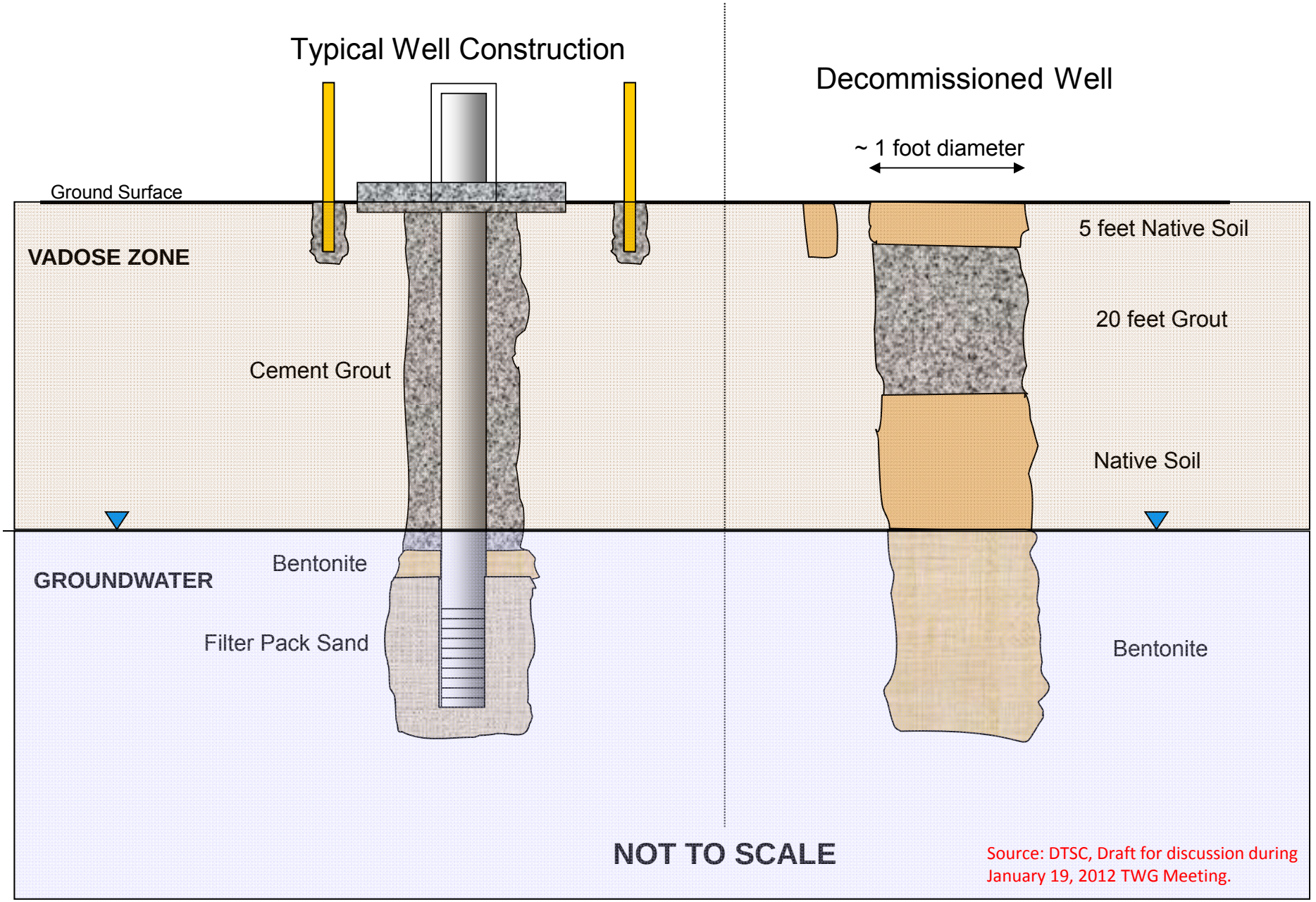

Source: DTSC, Draft for discussion during January 19, 2012 TWG Meeting.

Category 2: Contaminanted Area – No Variance

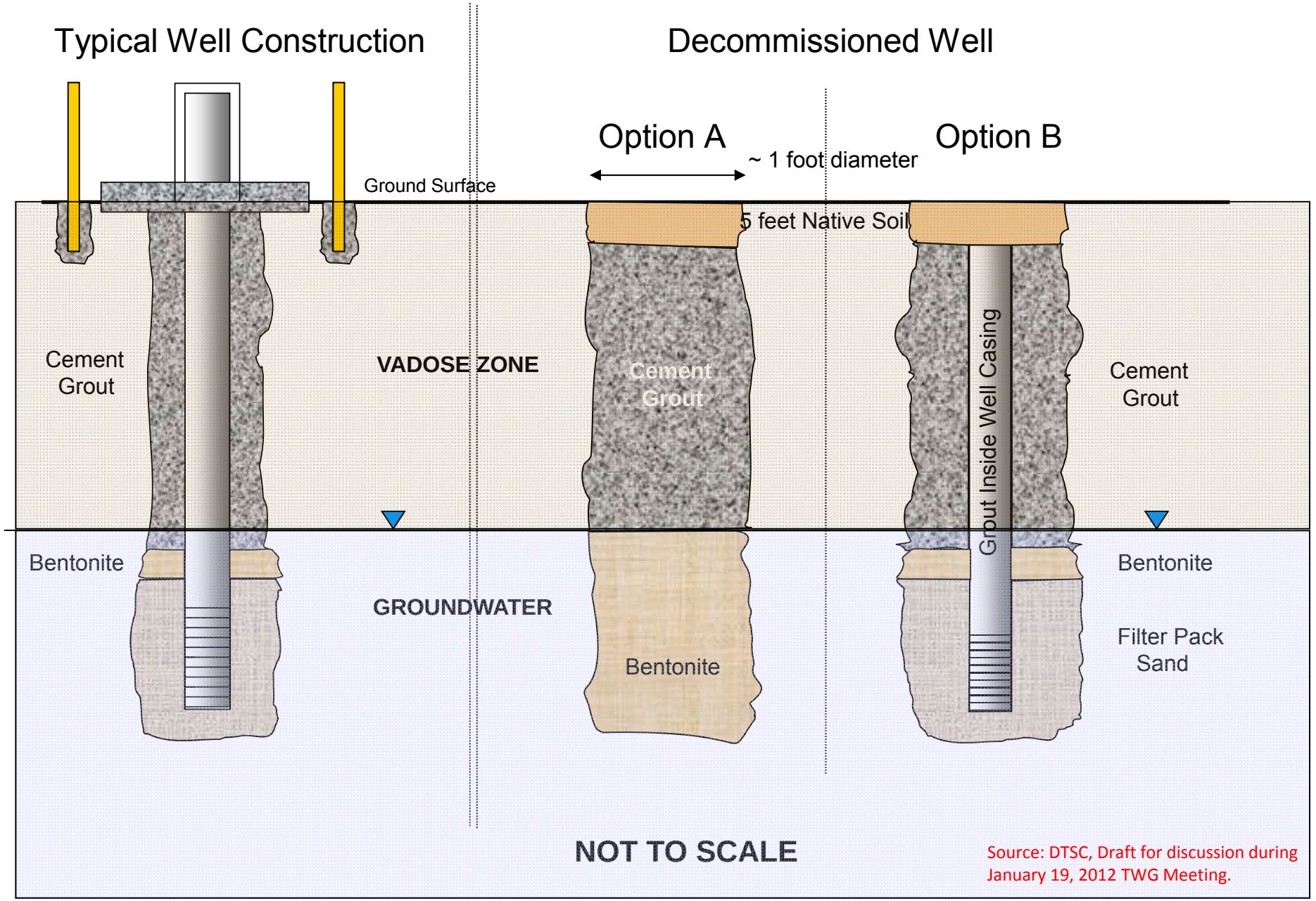

Source: DTSC, Draft for discussion during January 19, 2012 TWG Meeting.

Category 3: Contaminant Free – Variance

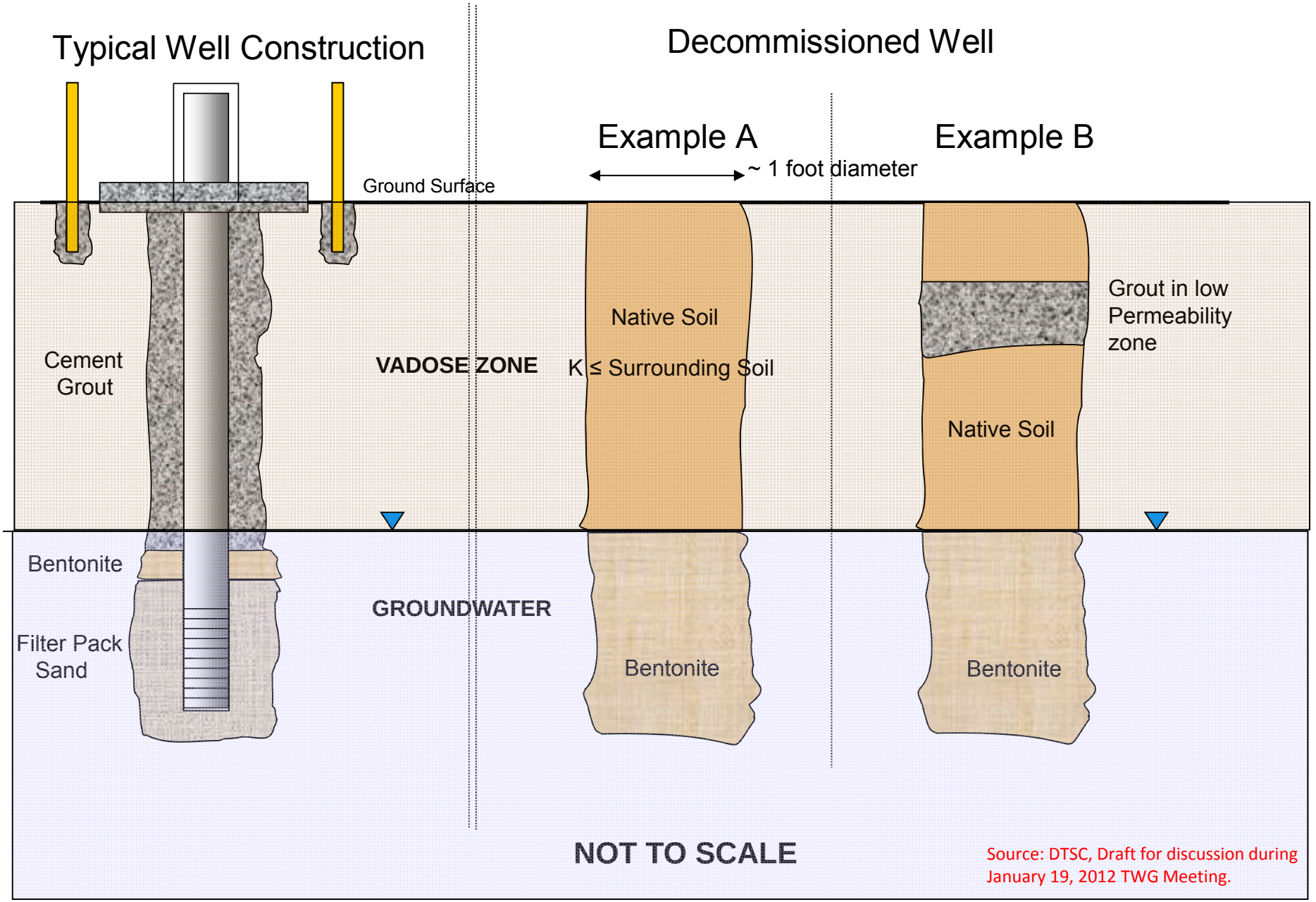

Source: DTSC, Draft for discussion during January 19, 2012 TWG Meeting.

SOP-B2

Soil Classification and Logging Procedures
Standard Operating Procedures for PG&E Topock Program

This standard operating procedure (SOP) provides guidance to obtain accurate and consistent descriptions of soil characteristics during soil-sampling operations. The characterization is based on visual examination and manual tests not on laboratory determinations.

REQUIRED DOCUMENTS

1) Event-specific sampling and analysis plan, work plan or event-specific field instructions. Planned borehole depth, proposed well construction/specifications, and field sampling summary table, if available.

2) Applicable project work plan or monitoring plan. Refer to Topock Program *Sampling, Analysis, and Field Procedures Manual* and *Quality Assurance Project* Plan (Procedures Manual), as required.

3) Topock Program Health and Safety Plan (HSP).

4) Previous sampling, drilling, or well construction logs from other boreholes or wells in the vicinity, if available.

5) Blank field notebook.

6) Blank CH2M HILL soil boring log Form D1586.

PREPARATION AND SETUP

1) Review event-specific work plan or event-specific field instructions, previous sampling logs, Procedures Manual, and HSP.

2) Initiate field logbook for sampling activity.

3) Review sampling procedures and equipment, and planned sample depths with drilling contractor and field crew.

EQUIPMENT LIST

- Indelible pens
- Tape measure or ruler
- Field logbook
- Spatula
- HCl, 10-percent solution
- Squirt bottle/Spray bottle with water

- Rock- or soil-color chart (e.g., Munsell)
- Grain-size chart
- Hand lens
- Unified Soil Classification System index charts and tables to help with soil classification

PROCEDURES

This section covers several aspects of the soil characterization: instructions for completing the CH2M HILL soil boring log (see Form D1586, Attachment A) and the field logging of soil using the "Unified Soil Classification System and Logging Criteria" (Attachment B).

Instructions for Completing Soil Boring Logs

- Soil boring logs will be completed on field boring log forms. Information collected will be consistent with that required for Form D1586 (attached), a standard CH2M HILL form, or an equivalent form that supplies the same information.
- The information collected in the field to perform the soil characterization is described below.
- Field personnel should review completed logs for accuracy, clarity, and thoroughness of detail. Samples also should be checked to see that information is correctly recorded on both jar lids and labels and on the log sheets.

Heading Information

1) **Boring/Well Number.** Enter the boring/well number. A numbering system should be chosen that does not conflict with information recorded for previous exploratory work done at the site. Number the sheets consecutively for each boring.
2) **Location.** If stationing, coordinates, mileposts, or similar project layout information is available, indicate the position of the boring to that system using modifiers such as "approximate" or "estimated," as appropriate.
3) **Elevation.** Elevation will be determined at the conclusion of field activities.
4) **Drilling Contractor.** Enter the name of the drilling company and the city and state where the company is based.
5) **Drilling Method and Equipment.** Identify the bit size and type, drilling fluid (if used), and method of drilling (e.g., rotary, hollow-stem auger, sonic). Information on the drilling equipment (e.g., CME 55, Mobile B61) should be noted.
6) **Water Level and Date.** Enter the depth below ground surface to the apparent water level in the borehole. The information should be recorded as a comment. If free water is not encountered during drilling or cannot be detected because of the drilling method, this information should be noted. Record date and time of day (for tides, river stage) of each water level measurement.

7) **Date of Start and Finish.** Enter the dates the boring was started and completed. Time of day should be added if several borings are performed on the same day.

8) **Logger.** Enter the first initial and full last name of the logger.

Technical Data

1) **Depth Below Surface.** Use a depth scale that is appropriate for the sample spacing and for the complexity of subsurface conditions.

2) **Sample Interval.** Note the depth at the top and bottom of the sample interval.

3) **Sample Type and Number.** Enter the sample type and number. SS-1 = split spoon, first sample. Number samples consecutively regardless of type. Enter a sample number even if no material was recovered in the sampler.

4) **Sample Recovery.** Enter the length to the nearest 0.1 foot of soil sample recovered from the sampler. Often, there will be some wash or caved material above the sample; do not include the wash material in the measurement. Record recovery in feet.

5) **Soil Description.** The soil classification should follow the format described in the "Field Classification of Soil" subsection below.

6) **Comments.** Include all pertinent observations (changes in drilling fluid color, rod drops, drilling chatter, rod bounce as in driving on a cobble, damaged Shelby tubes, and equipment malfunctions). In addition, note if casing was used, the sizes and depths installed, and if drilling fluid was added or changed. You should instruct the driller to alert you to any significant changes in drilling (changes in material, occurrence of boulders, and loss of drilling fluid). Such information should be attributed to the driller and recorded in this column. Specific information might include:

   - The date and the time drilling began and ended each day.
   - The depth and size of casing and the method of installation.
   - The date, time, and depth of water level measurements.
   - Depth of rod chatter.
   - Depth and percentage of drilling fluid loss.
   - Depth of hole caving or heaving.
   - Depth of change in material.
   - Health and safety monitoring data.
   - Drilling interval through a boulder.

Field Classification of Soil

This section presents the format for the field classification of soil. In general, the approach and format for classifying soils should conform to the "United Soils Classification System and Logging Criteria" (see charts and criteria, Attachment B).

- The Unified Soil Classification System (USCS) is based on numerical values of certain soil properties that are measured by laboratory tests (ASTM D 2487). It is possible, however, to estimate these values in the field with reasonable accuracy using visual-manual procedures (ASTM D 2488). In addition, some elements of a complete soil description, such as the presence of cobbles or boulders, changes in strata, and the relative proportions of soil types in a bedded deposit can be obtained only in the field.
- Soil descriptions should be precise and comprehensive without being verbose. The correct overall impression of the soil should not be distorted by excessive emphasis on insignificant details. In general, similarities rather than differences between consecutive samples should be stressed.

Soil Descriptions

Soil descriptions must be recorded for every soil sample collected. The format and order for soil descriptions should be:

1) Soil name (synonymous with ASTM D 2488 Group Name) with appropriate modifiers. Soil name should be in all capitals in the log, for example "POORLY-GRADED SAND."
2) Group symbol, in parentheses, for example, "(SP)."
3) Color, using Munsell color designation.
4) Particle size distribution (i.e., sand, silt, clay).
5) Moisture content.
6) Relative density or consistency.
7) Soil structure, mineralogy, or other descriptors.

This order follows, in general, the format described in ASTM D 2488.

(1) Soil Name

The basic name of a soil should be the ASTM D 2488 Group Name on the basis of visual estimates of gradation and plasticity. The soil name should be capitalized.

Examples of acceptable soil names are illustrated by the following descriptions:

- A soil sample is visually estimated to contain 15-percent gravel, 55-percent sand, and 30-percent fines (passing No. 200 sieve). The fines are estimated as either low- or highly-plastic silt. This visual classification is SILTY SAND WITH GRAVEL with a Group Symbol of (SM).
- Another soil sample has the following visual estimate: 10-percent gravel, 30-percent sand, and 60-percent fines (passing the No. 200 sieve). The fines are estimated as low-plastic silt. This visual classification is SANDY SILT. The gravel portion is not included in the soil name because the gravel portion was estimated as less than 15 percent. The Group Symbol is (ML).

The gradation of coarse-grained soil (more than 50 percent retained on No. 200 sieve) is included in the specific soil name in accordance with ASTM D 2488.

- There is no need to further document the gradation.
- However, the maximum size and angularity or roundness of gravel and sand-sized particles should be recorded.
- For fine-grained soil (50 percent or more passing the No. 200 sieve), the name is modified by the appropriate plasticity/elasticity term in accordance with ASTM D 2488.

Interlayered soil should each be described starting with the predominant type.

- An introductory name, such as "Interlayered Sand and Silt," should be used.
- In addition, the relative proportion of each soil type should be indicated (see Table 1 for example).

Where helpful, the evaluation of plasticity/elasticity can be justified by describing results from any of the visual-manual procedures for identifying fine-grained soils, such as reaction to shaking, toughness of a soil thread, or dry strength as described in ASTM D 2488.

(2) Group Symbol

The appropriate group symbol from ASTM D 2488 must be given after each soil name.

1) The group symbol should be placed in parentheses to indicate that the classification has been estimated.
2) In accordance with ASTM D 2488, dual symbols (e.g., GP-GM or SW-SC) can be used to indicate that a soil is estimated to have about 10-percent fines.
3) Borderline symbols (e.g., GM/SM or SW/SP) can be used to indicate that a soil sample has been identified as having properties that do not distinctly place the soil into a specific group. Generally, the group name assigned to a soil with a borderline symbol should be the group name for the first symbol. The use of a borderline symbol should not be used indiscriminately. Every effort should be made to first place the soil into a single group.

(3) Color

Soil color is described by comparing the sample with the Munsell Soil Color Charts. The Munsell colors should be used unless directed otherwise by project sampling plans. Instructions for their proper use are in the color charts. The color name shall precede the Munsell color notation (e.g., "yellowish brown, 10 YR 5/4"), with color hue and chroma number parenthetically entered in the borelog description. If no color chip is available, the color should be simply described as primary color (i.e., green, brown, gray, yellow, tan, etc.).

(4) Particle Size Distribution

Within the gravel sizes and the sand sizes, there are further divisions based on particle sizes. Gravel is divided into fine and coarse gravel. Fine-gravel particles (pebbles) are those that would pass through 3/4-inch opening but not a 1/4-inch opening. The fine gravel ranges from pea- to marble-sized. Coarse-gravel particles are those that would pass through a 3-inch opening but not a 3/4-in opening. Common objects of this size are grapes and tennis balls. Cobbles range from 3 inches to 12 inches in size; boulders are larger than 12 inches.

Sand is divided into three sizes: fine, medium, and coarse. Sand passes a No. 4 sieve (approximately 1/4 inch) and is retained in a No. 200 sieve (0.003 inch). Fine-sand particles pass a No. 40 sieve (approximately 1/64 inch) and are retained in the No. 200 (0.003 inch) sieve. These particles are sugar- or table salt-sized. Medium sand passes the No. 10 sieve (approximately 1/2 inch) and retained on the No. 40 sieve. These particles are about the same size as the openings in window screening. Coarse-sand particles would pass a No. 4 sieve (approximately 1/4 inch) and be retained on a No. 10 sieve. Rock salt granules fall in this size range. Sand and gravel particle sizes are illustrated in ASTM D2488 along with percentage estimating charts. The percentages of different grain size fractions are important in the soil type determination.

(5) Moisture Content

Soil moisture content shall be estimated using only the terminology described below:

- Dry - Absence of moisture, dusty, dry to the touch
- Moist - Damp but no visible water
- Wet - Visibly free water, usually sampled from below the water table

(6) Relative Density or Consistency

An estimate of the consistency shall accompany descriptions of all fine-grained soil (silt and clay where more than 50 percent of the material would pass the No. 200 sieve). A pocket penetrometer is the most accurate method for estimating the consistency of fine-grained soils. The table below lists characteristics for soil consistency identification.

Consistency	Unconfined Compressive Strength (tons/ft)[a]	Blows/foot (SPT) [b]	Manual Procedure
Very soft	<0.25	0 – 4	Thumb will penetrate soil more than 1 inch (25 mm).
Soft	0.25 - 0.50	4 – 8	Thumb will penetrate soil about 1 inch (25 mm).
Firm (formerly stiff)	-1.50	8 – 15	Thumb will indent soil about 1/4 inch (6 mm).
Hard	-2.00	15 – 30	Thumb will not indent soil but readily indented with thumbnail.
Very hard	>4.0	> 30	Thumbnail will not indent soil.

Notes:

[a] Pocket penetrometer

[b] Blows/foot is defined as the total number of blows required to drive the second and third 6 inches of penetration (blow counts for the first 6 inches are also noted) while driving an 18-inch SPT sampler with a 140-pound hammer falling a free height of 30 inches. Conversion factors may be applied when the field log information is transferred to the final log when using a sampler other than an SPT (Standard penetrometer) (e.g., S&H or Modified California), or when using different hammer weights and drop. The conversion factor is approximately 0.5 for an S&H sampler with a hammer weight of 140 pounds falling 30 inches.

Descriptions of all coarse-grained soil (sand and gravel where less than 50 percent of the material would pass the No. 200 sieve and 100 percent would pass the 3-inch sieve) shall be

accompanied by an estimate of the density based upon standard penetrometer (SPT) blow counts. The following terminology should be used:

Density	Blows/foot (SPT)
Very loose	< 4
Loose	4-10
Medium dense	10-30
Dense	30-50
Very dense	> 50

(7) Soil Structure, Mineralogy, and Other Descriptors

Discontinuities and inclusions are important and should be described. Such features include joints or fissures, slickensides, bedding or laminations, veins, root holes, and wood debris.

Significant mineralogical information such as cementation, abundant mica, or unusual mineralogy should be described.

Other descriptors may include particle angularity or shape, maximum particle size, hardness of large particles, plasticity of fines, dry strength, dilatancy, toughness, reaction to HCl, and staining, as well as other information such as organic debris, odor, or presence of free product. Criteria for the use of these other descriptions include:

- Structure:
  - Stratified - Alternating layers of varying material or color with layers at least 1/4-inch thick; note thickness.
  - Laminated - Alternating layers of varying material or color with the layers less than 1/4-inch thick; note thickness.
  - Fissured - Breaks along definite planes of fracture with little resistance.
  - Slickensides - Fracture planes appear polished or glossy, often striated.
  - Blocky - Cohesive soil that can be broken down into small angular lumps that resist further breakdown.
  - Lensed - Inclusion of small pockets of different soils, such as lenses of sand within clay; note thickness.
  - Homogeneous - Same color and appearance throughout.
  - Grading - Whether the particles increase or decrease in size toward the top of logged interval.
- Particle Shape:
  - Flat - Particles with width/thickness ratio > 3.
  - Elongated - Particles with length/width ratio > 3.

  - Elongated and flat - Particles meet criteria for both flat and elongated.

- Particle Angularity:
  - Angular - Particles have sharp edges and relatively planar sides with unpolished surfaces.
  - Subangular - Particles are similar to angular description but have rounded edges.
  - Subrounded - Particles have nearly planar sides but have well-rounded corners and edges.
  - Rounded - Particles have smoothly-curved sides and no edges.
- Cementation:
  - Weak - rumbles or breaks with handling or little finger pressure.
  - Moderate - Crumbles or breaks with considerable finger pressure.
  - Strong - Will not crumble or break with finger pressure.
- Reaction with HCl:
  - None - No visible reaction.
  - Weak - Some reaction, bubbles forming slowly.
  - Strong - Vigorous reaction, bubbles forming immediately.

Comments

This section should be reserved for information not pertaining to lithologic description. Sample information including sample identifier, analysis, matrix, and depth interval should be included in the boring log comments. Information related to drilling, such as drilling rate, chatter, and equipment malfunctions should also be well documented in the comments section of the boring log. Additionally interpretations of the lithologic data may also be presented in the comments section. Examples of this include "transition between Older Alluvium and Fanglomerate," "paleosol horizon B," or "conductive zone."

Recovery

Recovery data are entered along the left side of the boring log. Enter the length of retrieved core to the nearest 0.1 foot of sample recovered and record the value in feet. Do not count slough or caved material as part of the total recovered length of core. Record total length and percent of sample recovered. If using a 5-foot sample barrel, multiply the total length by 2 and 100 to get a percentage number. Similarly, if using a 2.5-foot sampler, multiply by 4 and 100 to get the percent recovery.

Backfilling

When a boring is completed and the water level measured, the boring shall be backfilled to ground surface according to applicable regulations. The destruction of the hole shall be noted on the log. Borehole destruction should follow SOP 28 *Soil Boring Abandonment*

Attachments

- Soil Boring Log, CH2M HILL Form D1586, and a completed example
- Unified Soil Classification System and Logging Criteria

Key Checks and Preventive Maintenance

Check entries to the soil boring log and field logbook in the field; because the samples will be disposed of, confirmation and corrections cannot be made later. Check that sample numbers and intervals are properly specified. Check that drilling and sampling equipment is decontaminated using the procedures defined in SOP *Decontamination of Drilling Rigs and Equipment*.

ATTACHMENT A

Examples of Soil Bore Logs

CH2MHILL

PROJECT NUMBER	BORING NUMBER SHEET OF

SOIL BORING LOG

PROJECT _____ LOCATION _____

ELEVATION _____ DRILLING CONTRACTOR _____

DRILLING METHOD AND EQUIPMENT _____

WATER LEVELS _____ START _____ FINISH _____ LOGGER _____

DEPTH BELOW SURFACE (FT)	SAMPLE			STANDARD PENETRATION TEST RESULTS	SOIL DESCRIPTION	COMMENTS
	INTERVAL	NUMBER AND TYPE	RECOVERY (FT)	6"-6"-6" (N)	SOIL NAME, USCS GROUP SYMBOL, COLOR, MOISTURE CONTENT, RELATIVE DENSITY OR CONSISTENCY, SOIL STRUCTURE, MINERALOGY	DEPTH OF CASING, DRILLING RATE, DRILLING FLUID LOSS, TESTS AND INSTRUMENTATION

REV 9/96 FORM D1586

SHEET 1 of 9	**PROJECT NUMBER:** 326128.01.16.EN	**BORING NUMBER:** *MW-47*

SOIL BORING LOG - DRAFT FOR DISCUSSION

PROJECT NAME: IMPM Drill Program		**HOLE DEPTH (ft):** 288.0	**DRILLING CONTRACTOR:** Prosonic Corp. Phoenix, AZ	
SURFACE ELEVATION: 482.6 ft. MSL	**NORTHING (CCS NAD 27 Z 5):** 2,103,450.05	**EASTING (CCS NAD 27 Z 5):** 7,615,629.49	**DATE STARTED:** 02/27/2006	**DATE COMPLETED:** 03/13/2006
DRILLING METHOD: Rotosonic			**DRILLING EQUIPMENT:** Sonic AT (track mounted)	
LOCATION: PG&E Compressor Station - Flood Plain, Topock, California			**LOGGED BY:** B. Moayyad, K. Ebel	

DEPTH BGS (feet)	SAMPLE INTERVAL	SAMPLE TYPE/ NUMBER	SAMPLE RECOVERY (ft)	USCS CODE	SOIL DESCRIPTION SOIL NAME, USCS SYMBOL, COLOR, PERCENT COMPOSITION, GRADING, GRAIN SHAPE, MINERALOGY, DENSITY/CONSISTENCY, STRUCTURE, MOISTURE.	COMMENTS DRILLING OBSERVATIONS AND OPERATIONS, DAILY START AND END TIMES , DRILL RATE, REFUSALS, SAMPLING AND TESTING NOTES.
5			6	SP	**POORLY GRADED SAND (SP)** - very lt brn (10YR7/3), =2% fines, 98% f to m lithic quartz sand, subang to subrnd, dry - fine roots, iron staining, some iron oxide coating on grains	Hand augured to 5' bgs
10			10	SP	- slightly moist - dry	Rapid drill rate, no chatter
15						
20			16	SW	**WELL GRADED SAND w/ GRAVEL (SW)** - lt yellowish brn (10YR6/4), 45% gravel up to 7cm, 50% f to m sand, 5% fines, loose, met subang gravel, dry(moist@ 17') - cobble present in slough - one subrnd chert gravel - Possible Fluvially Reworked Alluvium - lt grey (10YR7/2), subang to rnd met gravel up to 9cm, 2% to 5% fines - dk yellowish brn (10YR4/4), mostly c sand subang to ang, met, some Miocene conglomerate gravel	
25					- 65% sand, 30% gravel up to 4cm, 5% fines	
30				SW	**WELL GRADED SAND w/ GRAVEL (SW)** - dk yellowish brn (10YR3/6), 35% gravel up to 4cm, 55% m to c sand, 10% silty fines, met clasts are grain supported some mm siltstone - some oxide staining	
35				SW	**WELL GRADED SAND w/ GRAVEL AND CLAY (SW)** - dk yellowish brn (10YR3/6), 30% subang met gravel up to 7 cm, 55% subrnd to subang m to c sand, 15% clayey fines, m density, moist	Drill rate slowed to clean out 8" pipe

CH2MHILL

PROJECT NUMBER: 326128.01.16.EN

BORING NUMBER: *MW-47*

SOIL BORING LOG - DRAFT FOR DISCUSSION

PROJECT NAME: IMPM Drill Program		**HOLE DEPTH (ft):** 288.0	**DRILLING CONTRACTOR:** Prosonic Corp. Phoenix, AZ	
SURFACE ELEVATION: 482.6 ft. MSL	**NORTHING (CCS NAD 27 Z 5):** 2,103,450.05	**EASTING (CCS NAD 27 Z 5):** 7,615,629.49	**DATE STARTED:** 02/27/2006	**DATE COMPLETED:** 03/13/2006
DRILLING METHOD: Rotosonic			**DRILLING EQUIPMENT:** Sonic AT (track mounted)	
LOCATION: PG&E Compressor Station - Flood Plain, Topock, California			**LOGGED BY:** B. Moayyad, K. Ebel	

DEPTH BGS (feet)	SAMPLE INTERVAL	SAMPLE TYPE/ NUMBER	SAMPLE RECOVERY (ft)	USCS CODE	SOIL DESCRIPTION SOIL NAME, USCS SYMBOL, COLOR, PERCENT COMPOSITION, GRADING, GRAIN SHAPE, MINERALOGY, DENSITY/CONSISTENCY, STRUCTURE, MOISTURE.	COMMENTS DRILLING OBSERVATIONS AND OPERATIONS, DAILY START AND END TIMES , DRILL RATE, REFUSALS, SAMPLING AND TESTING NOTES.
			2.5	SW	**WELL GRADED SAND w/ GRAVEL (SW)** - dr yellowish brn (10YR3/6), 30% gravel, 60% sand, 10% silty fines	Drilling smooth but preceeds less rapidly
40			10	SW	**WELL GRADED SAND w/ GRAVEL (SW)** - 40% subang met gravel up to 6cm, 55% subrnd to ang sand, 5% fines - more gravel below 38'	
45					- gravel is mostly fine	
50			10	SW	**WELL GRADED SAND w/ GRAVEL (SW)** - Pale brn (10YR6/3), 30% subang met gravel up to 5cm, 60% subrnd to subang m to c met sand, 10% silty fines, wet	Soil sample collected
				SP	**POORLY GRADED SAND w/ GRAVEL (SP)** - pale brn (10TR6/3), 30% f subang gravel up to 2 cm, 65% mostly c sand, =2% fines	
55				SW	**WELL GRADED SAND w/ GRAVEL (SW)** - yellowish brn (10YR5/4), 40% subang met gravel up to 9cm, 55% f to c met sand, 5% silty fines, clast supported, m density, wet	
60			9.5	GW	**WELL GRADED GRAVEL w/ SILT AND SAND (GW)** - brn (7.5YR5/4), 55% subang to ang met gravel up to 4cm, 25% f to c sand, 20% silty fines, dense, moist to dry - soil dries out	Collected Isoflow sample
65					- lt grey (10YR7/2) and powder dry - moist sandy zone, 55% gravel, 35% sand, 10% fines - dry silty lt grey GW below 65'	Drill rate slows to 2' / min
70				SW	**WELL GRADED SAND w/ GRAVEL (SW)** - yellowish brn (10YR5/4), 35% subang met gravel up to 4cm, 60% subrnd sand, 5% silty fines, loose, moist to wet	Moderate Drill Rate

CH2MHILL

PROJECT NUMBER: 326128.01.16.EN

BORING NUMBER: *MW-47*

SOIL BORING LOG - DRAFT FOR DISCUSSION

PROJECT NAME: IMPM Drill Program		**HOLE DEPTH (ft):** 288.0	**DRILLING CONTRACTOR:** Prosonic Corp. Phoenix, AZ	
SURFACE ELEVATION: 482.6 ft. MSL	**NORTHING (CCS NAD 27 Z 5):** 2,103,450.05	**EASTING (CCS NAD 27 Z 5):** 7,615,629.49	**DATE STARTED:** 02/27/2006	**DATE COMPLETED:** 03/13/2006
DRILLING METHOD: Rotosonic			**DRILLING EQUIPMENT:** Sonic AT (track mounted)	
LOCATION: PG&E Compressor Station - Flood Plain, Topock, California			**LOGGED BY:** B. Moayyad, K. Ebel	

DEPTH BGS (feet)	SAMPLE INTERVAL	SAMPLE TYPE/ NUMBER	SAMPLE RECOVERY (ft)	USCS CODE	SOIL DESCRIPTION SOIL NAME, USCS SYMBOL, COLOR, PERCENT COMPOSITION, GRADING, GRAIN SHAPE, MINERALOGY, DENSITY/CONSISTENCY, STRUCTURE, MOISTURE.	COMMENTS DRILLING OBSERVATIONS AND OPERATIONS, DAILY START AND END TIMES , DRILL RATE, REFUSALS, SAMPLING AND TESTING NOTES.
			6	SP	**POORLY GRADED SAND w/ SILT (SP)** - brn (7.5YR4/4), 5% subrnd to subang met gravel up to 4cm, 85% f to c sand, 10% fines, poorly graded, wet, no odor	
145			3	SM	**SILTY SAND W/ GRAVEL (SM)** - brn (7.5YR4/4), 20% subang to subrnd gravel up to 6cm, 60% f to c sand, 20% silty fines, well graded, m consolidated, met, wet, no odor	
150			5	SM	**SILTY SAND w/ GRAVEL (SM)** - dk yellowish brn (10YR4/4), 25% subang to subrnd up to 4cm met gravel, 60% well graded f to c sand, 15% fines, wet, no odor	
155			4	SW	**WELL GRADED SAND w/ SILT AND SAND (SW)** - dr yellowish brn (10YR4/4), 10% subang to subrnd up to 3cm met gravel, 75%well graded f to c sand, 15% fines, moist to wet	
			2	SW	**SILTY SAND (SM)** - brn (7.5YR4/4), 5% ang to subrnd met gravel up to 1.5cm increasing with depth, 85% poorly graded m to c sand, 10% fines, loose, wet	
			2	SM	**SILTY SAND w/ GRAVEL (SM)** - dk yellowish brn (10YR4/4), 15% subang to subrnd up to 2.5cm met gravel, 75% well graded f to c sand, 10% fines, mostly met, trace chert, loose, wet, no odor	Collected Isoflow sample
160			4	SM	**SILTY SAND W/ GRAVEL (SM)** - brn (7.5YR4/4), 25% subang to subrnd gravel up to 6.5cm, 60% m to c sand, 15% silty fines, well graded, m consolidated, met, wet, no odor	Drill rate = 0.75' to 1.5' / min
165			4	SW	**SILTY SAND (SW)** - mottled dk reddish brn (5YR3/4), 10% subang to subrnd gravel up to 2.5cm, 50% well graded f to m sand, 40% silt, metamorphic, dry to damp, no odor, interbedded sandy silt laminations	
170			5.5	SW	**SAND w/ GRAVEL (SW)** - dk reddish brn (5YR3/4), 20% subang to subrnd gravel up to 5cm, 75% f to c sand, 5% fines, well graded, loose, met, wet	
175			2.5	SM	**SILTY SAND w/ GRAVEL (SM)** - brn (7.5YR4/4), 15% subang to subrnd gravel, 70% f to m sand, 15% fines, poorly graded, met,increasingly consolidated, slightly to moderately calcareous, moist to wet	

PROJECT NUMBER:	BORING NUMBER:
326128.01.16.EN	*MW-47*

SOIL BORING LOG - DRAFT FOR DISCUSSION

PROJECT NAME: IMPM Drill Program		**HOLE DEPTH (ft):** 288.0	**DRILLING CONTRACTOR:** Prosonic Corp. Phoenix, AZ	
SURFACE ELEVATION: 482.6 ft. MSL	**NORTHING (CCS NAD 27 Z 5):** 2,103,450.05	**EASTING (CCS NAD 27 Z 5):** 7,615,629.49	**DATE STARTED:** 02/27/2006	**DATE COMPLETED:** 03/13/2006
DRILLING METHOD: Rotosonic			**DRILLING EQUIPMENT:** Sonic AT (track mounted)	
LOCATION: PG&E Compressor Station - Flood Plain, Topock, California			**LOGGED BY:** B. Moayyad, K. Ebel	

DEPTH BGS (feet)	SAMPLE INTERVAL	SAMPLE TYPE/ NUMBER	SAMPLE RECOVERY (ft)	USCS CODE	SOIL DESCRIPTION SOIL NAME, USCS SYMBOL, COLOR, PERCENT COMPOSITION, GRADING, GRAIN SHAPE, MINERALOGY, DENSITY/CONSISTENCY, STRUCTURE, MOISTURE.	COMMENTS DRILLING OBSERVATIONS AND OPERATIONS, DAILY START AND END TIMES , DRILL RATE, REFUSALS, SAMPLING AND TESTING NOTES.
285			0	BR	**MIOCENE CONGLOMERATE BEDROCK (BR)** - 60% well graded subang to rnd gravel up to 10cm, 30% well graded sand, 10% fines, very calcareous, well consolidated to mostly hard, mod to very altered locally, mostly met, dry to moist	
					Boring Terminated at 288 ft	

ABBREVIATIONS

cc = continuous core run
brn = brown
lt = light
dk = dark
vf = very fine-grained
f = fine-grained
m = medium-grained
c = coarse-grained
vc = very coarse-grained
ang = angular
subang = subangular
subrnd = subrounded
rnd = rounded
br = bedrock formation
ss = sandstone
conglom = conglomerate
comptd = compacted
qtz = quartz

CH2MHILL

ATTACHMENT B

Unified Soil Classification System and Logging Criteria

GENERAL SOIL CATEGORIES			SYMBOLS		TYPICAL SOIL TYPES
COARSE GRAINED SOILS More than half is larger than No. 200 sieve	GRAVEL More than half coarse fraction is larger than No. 4 sieve size	Clean Gravel with little or no fines	GW		Well Graded Gravel, Gravel-Sand Mixtures
			GP		Poorly Graded Gravel, Gravel-Sand Mixtures
		Gravel with more than 12% fines	GM		Silty Gravel, Poorly Graded Gravel-Sand-Silt Mixtures
			GC		Clayey Gravel, Poorly Graded Gravel-Sand-Clay Mixtures
	SAND More than half coarse fraction is smaller than No. 4 sieve size	Clean sand with little or no fines	SW	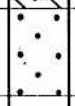	Well Graded Sand, Gravelly Sand
			SP		Poorly Graded Sand, Gravelly Sand
		Sand with more than 12% fines	SM		Silty Sand, Poorly Graded Sand-Silt Mixtures
			SC		Clayey Sand, Poorly Graded Sand-Clay Mixtures
FINE GRAINED SOILS More than half is smaller than No. 200 sieve	SILT AND CLAY Liquid Limit Less than 50%		ML		Inorganic Silt and Very Fine Sand, Rock Flour, Silty or Clayey Fine Sand, or Clayey Silt with Slight Plasticity
			CL		Inorganic Clay of Low to Medium Plasticity, Gravelly Clay, Sandy Clay, Silty Clay, Lean Clay
			OL		Organic Clay and Organic Silty Clay of Low Plasticity
	SILT AND CLAY Liquid Limit Greater than 50%		MH		Inorganic Silt, Micaceous or Diatomaceous Fine Sandy or Silty Soils, Elastic Silt
			CH		Inorganic Clay of High Plasticity, Fat Clay
			OH		Organic Clay of Medium to High Plasticity, Organic Silt
HIGHLY ORGANIC SOILS			PT		Peat and Other Highly Organic Soils

UNIFIED SOIL CLASSIFICATION SYSTEM

JOB NUMBER	DATE	APPROVED	PLATE

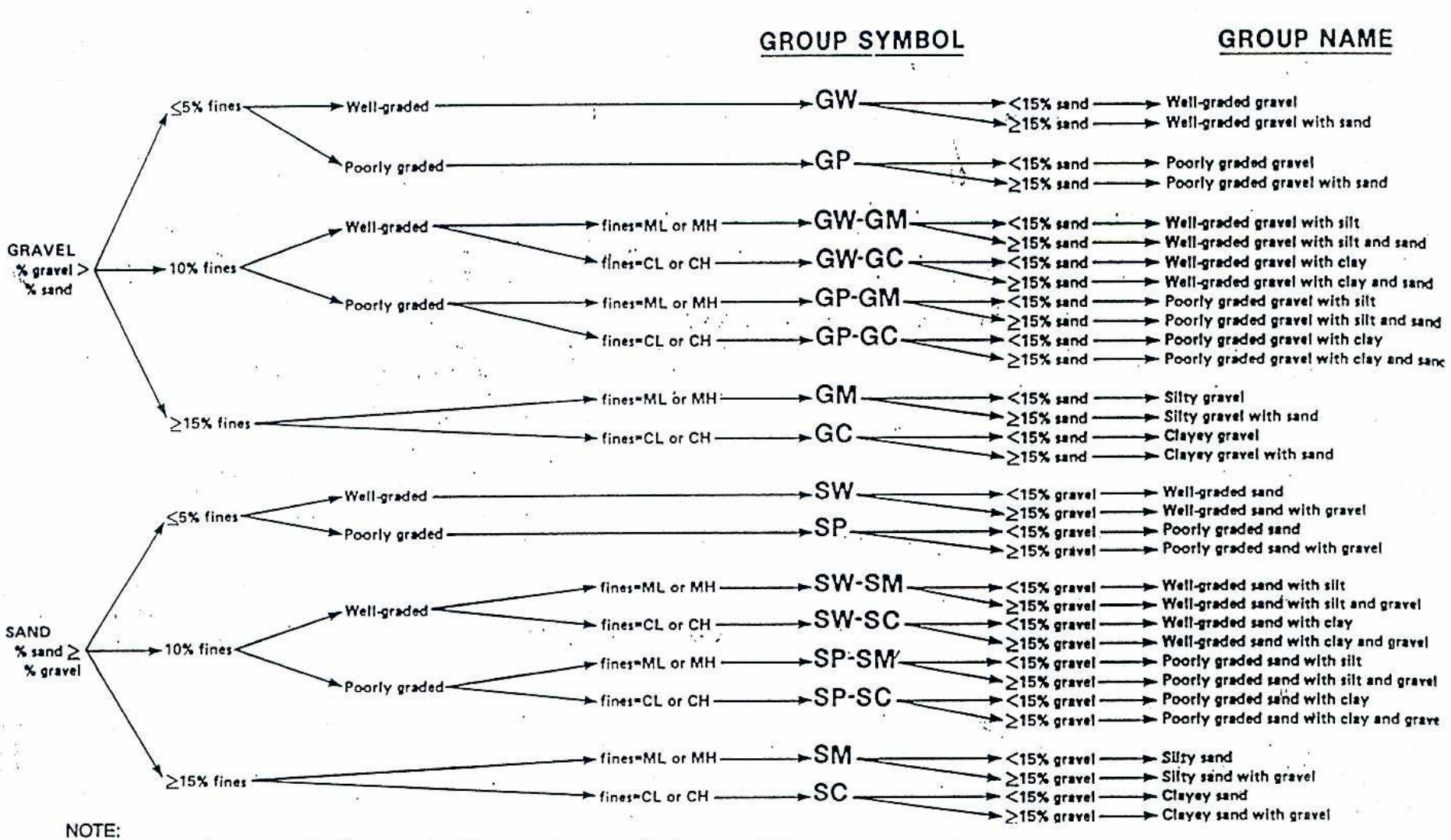

NOTE:
Percentages are based on estimating amounts of fines, sand, and gravel to the nearest 5%
(After ASTM Designation D2488 Standard Test Method for Classification of Soils for Engineering Purposes)

Flow Chart for Classifying Coarse-grained Soil
(50% or more retained on No. 200 sieve)
Field Guide for Soil Classification and Logging Procedures

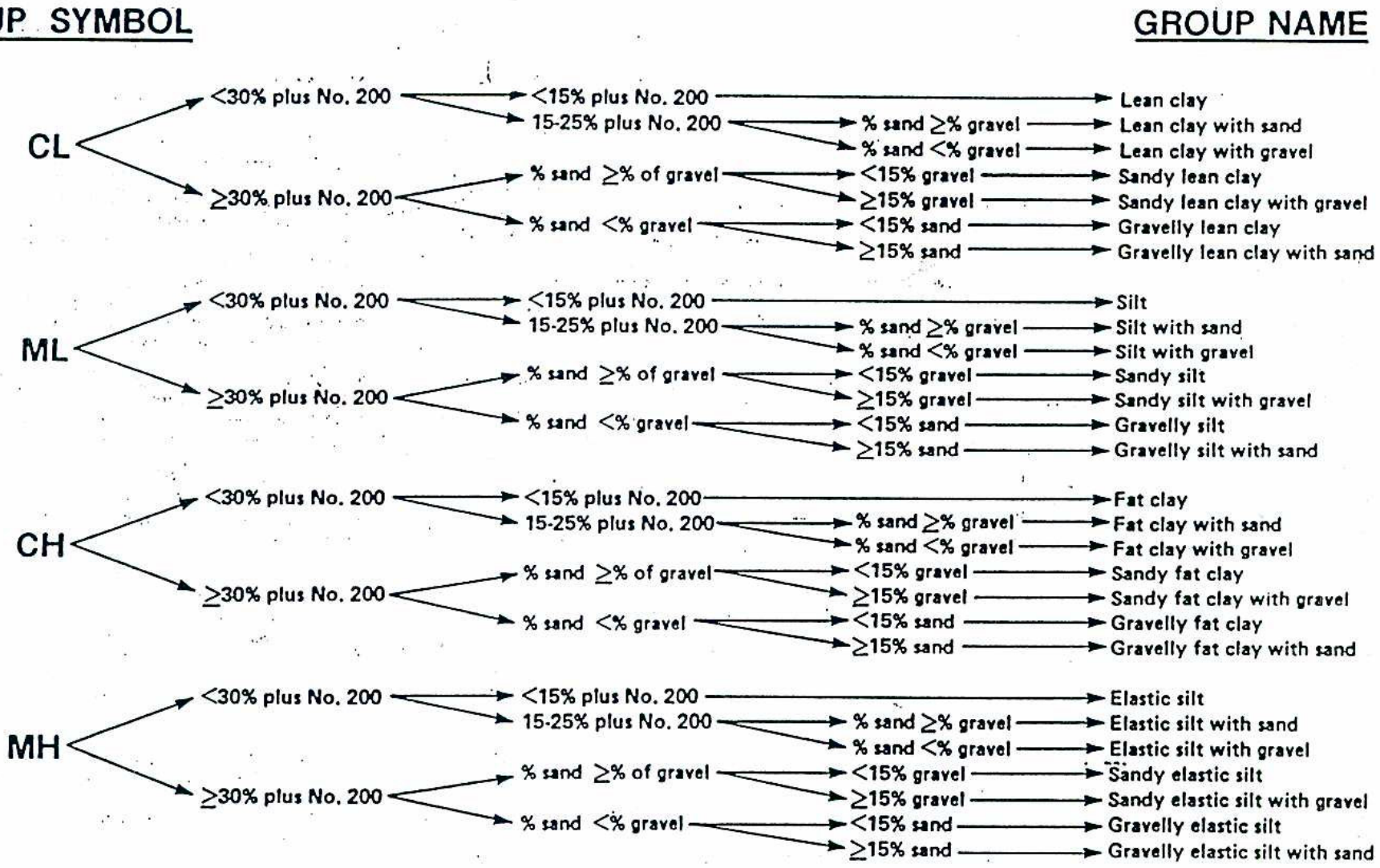

NOTE:
Percentages are based on estimating amounts of fines, sand, and gravel to the nearest 5%
(After ASTM Designation D2488 Standard Test Method for Classification of Soils for Engineering Purposes)

Flow Chart for Classifying Fine-grained Soil
(50% or more passing No. 200 sieve)
Field Guide for Soil Classification and Logging Procedures

similar, the material is classified as poorly graded or well sorted. If fines represent less than 5 percent of the total mass, the symbol SP is used for a poorly-graded sand and SW for a well graded sand. If silts and/or clays exceed 12 percent, the symbols GC, SC, GM, and SM are used, respectively.

If the silts and clays are between 5 to 12 percent of the total sample weight, a dual classification with two group symbols is used. The first symbol is GW, GP, SW, or, SP, and the second is GC, GM, SC, or SM. The group name corresponds to the first group symbol plus the modifying words "with clay" or "with silt" to indicate the plasticity characteristics. If the fines plot on the CL-ML range on the plasticity chart (Figure 2-2), possible dual classification group names are:

GW-GM	well graded gravel with silt
GW-GC	well graded gravel with clay
GP-GM	poorly graded gravel with silt
GP-GC	poorly graded gravel with clay
SW-SM	well graded sand with silt
SW-SC	well graded sand with clay
SP-SM	poorly graded sand with silt
SP-SC	poorly graded sand with clay

If silts and clays exceed 12 percent of the total weight of sample, the modifiers "M" and "C" are used, respectively. If a sand or gravel has more than 15 percent of the other coarse-grained constituent, the words "with gravel" or "with sand" are added to the group name. A flow chart for classifying coarse-grained soils is presented in Figure 2-3.

2.2 Fine-grained Soils

Particles passing the No. 200 sieve are silts (M) and clays (C). These soils must undergo testing in order to differentiate between them. Typical tests used are: dry strength, dilatancy, toughness, and plasticity. These terms are further discussed in Tables 2-2 through Table 2-6. Silts have little or no dry strength when dry, while clays have considerable dry strength. Dry strength, dilatancy, and toughness are also used to identify the fine-grained fraction of coarse-grained soils.

TABLE 2-2
Criteria for Describing Dry Strength

Description	Criteria
None	The dry specimen crumbles into powder with the mere pressure of handling.
Low	The dry specimen crumbles into powder with some finger pressure.
Medium	The dry specimen breaks into pieces or crumbles with considerable finger pressure.
High	The dry specimen cannot be broken with finger pressure. The specimen will break into pieces between the thumb and a hard surface.
Very high	The dry specimen cannot be broken between the thumb and a hard surface.

TABLE 2-3
Criteria for Describing Dilatancy

Description	Criteria
None	There is no visible change in the specimen.
Slow	Water appears slowly on the surface of the specimen during shaking, and does not disappear, or disappears slowly upon squeezing.
Rapid	Water appears quickly on the surface of the specimen during shaking, and disappears quickly upon squeezing.

TABLE 2-4
Criteria for Describing Toughness

Description	Criteria
Low	Only slight pressure is required to roll the thread near the plastic limit. The thread and the lump are weak and soft.
Medium	Medium pressure is required to roll the thread to near the plastic limit. The thread and the lump have medium stiffness.
High	Considerable pressure is required to roll the thread to near the plastic limit. The thread and the lump have very high stiffness.

TABLE 2-5
Identification of Inorganic Fine-grained Soils from Manual Tests

Soil Symbol	Dry Strength	Dilatancy	Toughness
ML	None to low	Slow to rapid	Low or thread cannot form
CL	Medium to high	None to slow	Medium
MH	Low to medium	None to slow	Low to medium
CH	High to very high	None	High

TABLE 2-6
Criteria for Describing Plasticity

Description	Criteria
Nonplastic	A 1/8-inch (3-mm) thread cannot be rolled at any water content.
Low	The thread can barely be rolled, and the lump cannot be formed when drier than the plastic limit.
Medium	The thread is easy to roll, and not much time is required to read the plastic limit. The thread cannot be re-rolled after reaching the plastic limit. The lump crumbles when drier than the plastic limit.
High	It takes considerable time rolling and kneading to reach the plastic limit. The thread can be re-rolled several times after reaching the plastic limit. The lump can be formed without crumbling when drier that the plastic limit.

Fine-grained soils are accurately determined in the laboratory using the Atterberg Limits test. This test include liquid limit, plastic limit, and plasticity index measurements. The liquid limit is the water content of a soil at the point of transition from a plastic to a liquid state. The plastic limit is the water content of a soil at the point of transition from a semisolid to a plastic state. The plasticity index is the difference between the liquid limit and the plastic limit.

As shown in the Figure 2-2, five fields have been identified. These include:

- Silty Clays (CL), Organic Silts (OL) or Organic Silty Clays (OL) of low plasticity
- Fat Clays (CH) and Organic Clays (OH)
- Inorganic Silts (ML) and Organic Silty Clays (OL) of low plasticity
- Silts (MH) and Organic Clays (OH) of a high plasticity
- Silty Clays to Clayey Silt (CL-ML) of low plasticity

Fine-grained soils with a liquid limit > 50 are modified by the symbol H (MH or CH), and those with a liquid limit < 50 are modified by the symbol L (ML or CL). Fine-grained soils containing 30 percent or more coarse-grained fraction should be modified by descriptive terms, such as "gravelly" or "sandy." If the coarse fraction is between 15 and 30 percent, the words" with sand and/or gravel" should be added to the group name. A flow chart for classifying fine-grained soils is presented in Figure 2-4.

2.3 Organic Soils

To classify organic soils, the percentage organic material present in the soil as well as the non-organic fines must be estimated. When the organic content ranges from 18 to 36 percent, the material is an organic clay or an organic silt, depending on the nature of the fine-grained constituents. When the organic content is between 36 and 90 percent, the material is designated a muck or peaty muck (OL or OH). A flow chart for classifying organic soil is presented in Figure 2-4. The term "peaty" is added if the organic remains are

SOP-B3

Borehole Sampling and Logging of Soil Borings
Standard Operating Procedures for PG&E Topock Program

This standard operating procedure (SOP) provides guidance for sample collection from soil borings during the drilling process, and proper documentation necessary. Detailed guidance for sample collection, preservation and handling is provided in Section 4.0 of the site Quality Assurance Project Plan (QAPP) and in the Topock Program *Sampling, Analysis, and Field Procedures Manual* (Procedures Manual). SOP-B2 provides detailed guidance for soil characterization and logging.

REQUIRED DOCUMENTS

1) Event-specific sampling and analysis plan (SAP), work plan or event-specific field instructions. Planned borehole depth, proposed well construction/specifications, and field sampling summary table, if available.

2) Applicable project work plan or monitoring plan. Refer to the Procedures Manual and QAPP, as required.

3) Topock Program Health and Safety Plan (HSP).

4) Previous sampling, drilling, or well construction logs from other boreholes or wells in the vicinity, if available.

5) Blank sampling log and field notebook.

PREPARATION AND SETUP

1) Review event-specific work plan or event-specific field instructions, previous sampling logs, Procedures Manual, and HSP.

2) Initiate field logbook for sampling activity.

3) Review sampling procedures and equipment, and planned sample depths with drilling contractor and field crew.

Equipment List

- Field logbook
- Borehole log
- Blue or black waterproof or permanent ink pens
- Trash bags
- Plastic sandwich bags
- Paper towels

- Stainless steel sampling equipment (provided by driller)
- Decontamination equipment (Alconox® solution in spray bottle, brushes, buckets, rinse water spray bottle)
- Soil sample containers appropriate for sample analysis and preservation as called for in SAP and QAPP (glass jars, brass sleeves, Encore® containers, sandwich bags, etc.)
- Soil sampling equipment not provided by driller (spatula or putty knife, stainless steel compositing bowl, hand auger, etc.)
- Groundwater sample containers appropriate for sample analysis and preservation as called for in SAP and QAPP (glass jars, VOA vials, plastic jars, etc.)
- Groundwater sample equipment not provided by driller (pump, filters, tubing, power supply, etc.)
- Water quality meters
- Water level indicator
- Distilled water
- Coolers with ice
- Protective waterproof gloves (nitrile or latex)

GUIDELINES

Soil Boring Logs Documentation

Soil boring logs will be completed on the soil boring log forms during the drilling activities at the time of the logging and soil descriptions. Information collected will be consistent with the standard CH2M HILL form (See SOP-B2 attachment A). Sample data may also be documented in the comments section of the boring log.

Items documented on the borehole log include:

1) **Sample Interval:** The top and bottom depth of each sample run should be recorded on the borelog. Sampling includes samples collected for analysis as well as core retrieved for logging purposes.

2) **Sample Type and Number:** Enter the sample type and number consistent with the sampling and analysis plan at the correct depth intervals. An "x" should be placed across the vertical interval where the environmental soil, grab groundwater, or geotechnical sample was collected.

3) **Sample Recovery:** Enter the length of retrieved core to the nearest 0.1 foot of sample recovered, and record the value in feet. Do not count slough or caved material as part of the total recovered length of core. Record total length and percent of sample recovered. If using a 5-foot sample barrel, multiply the total length by 2 and 100 to get a percentage number. Similarly, if using a 2.5-foot sampler, multiply by 4 and 100 to get the percent recovery.

4) **Sampling:** Sampling difficulties shall be noted. Disturbed samples shall be noted on the log as well as the sample recovery. The top of the sample shall be marked on the container.

5) **Water Levels:** Water-level measurements, where groundwater is encountered, are required for each boring. Changes in soil moisture shall be noted and, if there is no water encountered, a note to that effect shall be included on the borehole log. The date and time of water-level measurements shall be documented.

At a minimum, sample identifiers (IDs) should be noted on boring logs at the depth collected. When time and space allows, a summary of analytical sample information can be included. When inclusion of these data prevents documentation of drilling information, sample data should be omitted in order to document drilling.

Borehole Sampling by Drilling—General Procedure

Split-spoon sampling procedures shall be executed in accordance with American Society for Testing and Materials (ASTM) D1586, "Standard Method for Penetration Test and Split-barrel Sampling of Soils" (ASTM 1984). California (2-inch) or Modified California (2.5-inch) split-barrel samplers may also be used.

1) The split-spoon or split-barrel sampler shall be advanced to the top of the sampling interval using a wire-line or sample rods such as A or AW. The larger-diameter samplers may be fitted with three 6-inch-long stainless-steel sleeves. The sampler shall be driven 18 inches or to refusal, with a 140-pound hammer dropping repeatedly 30 inches. Refusal shall be defined as requiring 50 blows with the hammer to advance the sampler less than 6 inches.

2) The number of blows required to drive the sampler each 6 inches shall be recorded on the borelog.

3) As the sample tubes are disassembled, an organic vapor monitor probe shall be inserted into the gap between two sample liners, and the liner exhibiting the highest reading shall be selected for analysis.

4) In general, the middle liner is collected for laboratory analysis, and 10 percent of the bottom liners are collected for quality assurance testing. A sample of the soil in the top liner typically is placed in a re-sealable plastic bag or 8-ounce clear glass jar and left in the sun for approximately 15 minutes to allow any volatile organic compounds (VOC) to volatilize.

5) After the 15 minute volatilization period, the soil vapor in the plastic bag is then measured for VOCs by taking a reading of the headspace. Background VOCs for the bag are determined by monitoring the air in an empty bag.

6) Results of the organic vapor monitoring are recorded on the boring log.

7) Small portions of soil at the ends of the sleeve are scraped off for classification.

Borehole Sampling by Drilling—Split Spoon Sampling

1) Samples collected for laboratory analysis using split spoon sampling device will be separated and transferred from the split-spoon halves into sample jars by clean stainless-steel utensils.

2) Samples for VOCs will be separated and collected first, followed by semivolatile organic compounds samples.

3) For VOC samples, avoid mixing the soil before sampling and sample directly from the split spoon. See SOPs for guidance on homogenizing soil samples and for VOC sampling using EnCore samplers, respectively.

Borehole Sampling by Drilling—Direct-push Sampling

1) Samples collected for laboratory analysis using a direct-push sampling drill rig will be handled by either opening the tube and placing the soil in sample jars or cutting the acetate tube and submitting it the laboratory directly.

2) For samples that will be removed from the acetate tube, the tube will be cut open longitudinally using a double-bladed razor knife.

   - Soil will be inspected and logged prior to removal of soil samples.
   - A short section of soil will be removed from the acetate sleeve using a stainless-steel utensil, homogenized in a clean stainless-steel bowl, and placed in sample jars.
   - Soil collected for VOC analysis will be sampled directly from the split acetate sleeve using EnCore samplers.

3) Alternatively, a short (6-inch) length of liner will be cut from the acetate sleeve and collected directly for laboratory analysis.

   - The section of acetate liner will be removed, capped with Teflon sheeting and plastic end caps at both ends, and taped with clear label or packing tape.
   - Labels shall be affixed to the liners with job designation, time, boring number, sample depth interval, sample number, date sampled, and the initials of the sampler clearly marked.
   - The samples shall then be enclosed in a plastic bag and stored in a cooler maintained at 4°C.
   - Sample information shall be placed on the chain-of-custody, the borelog, and the field logbook. All samples shall be handled in accordance with *Chain of Custody Procedures*.

Borehole Sampling by Drilling—Split-barrel Sampling

Soil samples can also be collected using a 3-foot-long or 5-foot-long split-barrel sampler. The split-barrel sampler is similar to the split-spoon sampler that is used to hold steel or brass sampling sleeves, but the split-barrel sampler typically is not used to hold sample sleeves.

1) The sampler is lowered to the base of the drill bit and is advanced slightly ahead of the drill bit and augers (or conductor casing). The weight of the drill string and sample barrel along with the drilling and cutting action of the drill bit advances the face of the split-barrel sampler into the formation.

2) Once the desired depth interval is reached, the split-barrel sampler is retrieved using a cable or tool steel sections.

3) The retrieved sampler is unscrewed, and one or both halves are laid on the sample table. The soil typically will form a continuous column of soil in one of the split-barrel halves.

4) The soil column is split longitudinally for soil descriptions using a putty knife or spatula.

5) Samples for VOC analysis are collected immediately directly from the soil column.

6) Other soil samples are collected after the core section has been described and logged. The soil is described following the procedures in the following sections.

Groundwater Sampling

1) Groundwater samples can be collected by hydropunch by bailer or by pumping from an isolated zone. Collection of groundwater by bailing is not an accurate method of collection depth discrete groundwater samples, as the zone sampled is poorly isolated.

2) Hydropunch samples are collected below the bit of the drill stem, in relatively undisturbed soil zone. This method of sample collection may be difficult in fine-textured soils and in very rocky soils. To collect these samples, a point is driven below the depth of the drill bit, then a screen zone is opened within this point and water allowed to flow in. The hydropunch tool must be decontaminated between samples.

Groundwater can also be collected from the open or cased borehole with a bailer. A disposable or decontaminated stainless-steel bailer is lowered into the boring, and water is collected. This method is preferable for collection of groundwater from the water table. Attempts can be made to collect discrete groundwater samples beneath the water table; however, the boring must be cased with watertight, stainless-steel pipe, and the boring must be evacuated prior to collection of samples.

Alternatively, discrete groundwater samples can be collected by isolating a zone with casing and packers. To collect these samples, the borehole is first advanced to the depth at which a sample is required. Then casing is advanced to within 20 feet of the sample zone. Next, a pump and packers are lowered into the hole. The zone from which samples are to be collected is isolated with a packer, and water is pumped directly from the target zone.

Sample Handling

Sample preservation and sampling procedures are detailed in Section 4.0 of the QAPP. Additional information is provided in the Procedures Manual and in the appropriate SAP.

KEY CHECKS AND ITEMS

- Check entries to the soil boring log and field logbook in the field during sampling activities because the samples will be disposed at the end of the fieldwork, confirmation and corrections cannot be made later.

- Check that the sample numbers and intervals are properly specified.
- Ensure that drilling equipment is decontaminated prior to the beginning of work and between each borehole.
- All materials generated during sampling (debris, PPE, decontamination liquids, etc.) will be placed in 55-gallon drums or roll-off bins for storage pending analysis and disposal off site, as outlined in SOP 39, Standard of Practice H-83, and Appendix D of the project *Soil and Groundwater Management Plan*.

ATTACHMENT A

Examples of Soil Bore Logs

CH2MHILL

PROJECT NUMBER	BORING NUMBER SHEET OF

SOIL BORING LOG

PROJECT _____ LOCATION _____

ELEVATION _____ DRILLING CONTRACTOR _____

DRILLING METHOD AND EQUIPMENT _____

WATER LEVELS _____ START _____ FINISH _____ LOGGER _____

DEPTH BELOW SURFACE (FT)	SAMPLE			STANDARD PENETRATION TEST RESULTS	SOIL DESCRIPTION	COMMENTS
	INTERVAL	NUMBER AND TYPE	RECOVERY (FT)	6"-6"-6" (N)	SOIL NAME, USCS GROUP SYMBOL, COLOR, MOISTURE CONTENT, RELATIVE DENSITY OR CONSISTENCY, SOIL STRUCTURE, MINERALOGY	DEPTH OF CASING, DRILLING RATE, DRILLING FLUID LOSS, TESTS AND INSTRUMENTATION

REV 9/96 FORM D1586

SHEET 1 of 9	**PROJECT NUMBER:** 326128.01.16.EN	**BORING NUMBER:** *MW-47*

SOIL BORING LOG - DRAFT FOR DISCUSSION

PROJECT NAME: IMPM Drill Program		**HOLE DEPTH (ft):** 288.0	**DRILLING CONTRACTOR:** Prosonic Corp. Phoenix, AZ	
SURFACE ELEVATION: 482.6 ft. MSL	**NORTHING (CCS NAD 27 Z 5):** 2,103,450.05	**EASTING (CCS NAD 27 Z 5):** 7,615,629.49	**DATE STARTED:** 02/27/2006	**DATE COMPLETED:** 03/13/2006
DRILLING METHOD: Rotosonic			**DRILLING EQUIPMENT:** Sonic AT (track mounted)	
LOCATION: PG&E Compressor Station - Flood Plain, Topock, California			**LOGGED BY:** B. Moayyad, K. Ebel	

DEPTH BGS (feet)	SAMPLE INTERVAL	SAMPLE TYPE/ NUMBER	SAMPLE RECOVERY (ft)	USCS CODE	SOIL DESCRIPTION SOIL NAME, USCS SYMBOL, COLOR, PERCENT COMPOSITION, GRADING, GRAIN SHAPE, MINERALOGY, DENSITY/CONSISTENCY, STRUCTURE, MOISTURE.	COMMENTS DRILLING OBSERVATIONS AND OPERATIONS, DAILY START AND END TIMES , DRILL RATE, REFUSALS, SAMPLING AND TESTING NOTES.
5			6	SP	**POORLY GRADED SAND (SP)** - very lt brn (10YR7/3), =2% fines, 98% f to m lithic quartz sand, subang to subrnd, dry - fine roots, iron staining, some iron oxide coating on grains	Hand augured to 5' bgs
10			10	SP	- slightly moist - dry	Rapid drill rate, no chatter
15						
20			16	SW	**WELL GRADED SAND w/ GRAVEL (SW)** - lt yellowish brn (10YR6/4), 45% gravel up to 7cm, 50% f to m sand, 5% fines, loose, met subang gravel, dry(moist@ 17') - cobble present in slough - one subrnd chert gravel - Possible Fluvially Reworked Alluvium - lt grey (10YR7/2), subang to rnd met gravel up to 9cm, 2% to 5% fines - dk yellowish brn (10YR4/4), mostly c sand subang to ang, met, some Miocene conglomerate gravel	
25					- 65% sand, 30% gravel up to 4cm, 5% fines	
30				SW	**WELL GRADED SAND w/ GRAVEL (SW)** - dk yellowish brn (10YR3/6), 35% gravel up to 4cm, 55% m to c sand, 10% silty fines, met clasts are grain supported some mm siltstone - some oxide staining	
35				SW	**WELL GRADED SAND w/ GRAVEL AND CLAY (SW)** - dk yellowish brn (10YR3/6), 30% subang met gravel up to 7 cm, 55% subrnd to subang m to c sand, 15% clayey fines, m density, moist	Drill rate slowed to clean out 8" pipe

CH2MHILL

PROJECT NUMBER: 326128.01.16.EN

BORING NUMBER: *MW-47*

SOIL BORING LOG - DRAFT FOR DISCUSSION

PROJECT NAME: IMPM Drill Program		**HOLE DEPTH (ft):** 288.0	**DRILLING CONTRACTOR:** Prosonic Corp. Phoenix, AZ	
SURFACE ELEVATION: 482.6 ft. MSL	**NORTHING (CCS NAD 27 Z 5):** 2,103,450.05	**EASTING (CCS NAD 27 Z 5):** 7,615,629.49	**DATE STARTED:** 02/27/2006	**DATE COMPLETED:** 03/13/2006
DRILLING METHOD: Rotosonic			**DRILLING EQUIPMENT:** Sonic AT (track mounted)	
LOCATION: PG&E Compressor Station - Flood Plain, Topock, California			**LOGGED BY:** B. Moayyad, K. Ebel	

DEPTH BGS (feet)	SAMPLE INTERVAL	SAMPLE TYPE/ NUMBER	SAMPLE RECOVERY (ft)	USCS CODE	SOIL DESCRIPTION SOIL NAME, USCS SYMBOL, COLOR, PERCENT COMPOSITION, GRADING, GRAIN SHAPE, MINERALOGY, DENSITY/CONSISTENCY, STRUCTURE, MOISTURE.	COMMENTS DRILLING OBSERVATIONS AND OPERATIONS, DAILY START AND END TIMES , DRILL RATE, REFUSALS, SAMPLING AND TESTING NOTES.
			2.5	SW	**WELL GRADED SAND w/ GRAVEL (SW)** - dr yellowish brn (10YR3/6), 30% gravel, 60% sand, 10% silty fines	Drilling smooth but preceeds less rapidly
40			10	SW	**WELL GRADED SAND w/ GRAVEL (SW)** - 40% subang met gravel up to 6cm, 55% subrnd to ang sand, 5% fines - more gravel below 38'	
45					- gravel is mostly fine	
50			10	SW	**WELL GRADED SAND w/ GRAVEL (SW)** - Pale brn (10YR6/3), 30% subang met gravel up to 5cm, 60% subrnd to subang m to c met sand, 10% silty fines, wet	Soil sample collected
				SP	**POORLY GRADED SAND w/ GRAVEL (SP)** - pale brn (10TR6/3), 30% f subang gravel up to 2 cm, 65% mostly c sand, =2% fines	
55				SW	**WELL GRADED SAND w/ GRAVEL (SW)** - yellowish brn (10YR5/4), 40% subang met gravel up to 9cm, 55% f to c met sand, 5% silty fines, clast supported, m density, wet	
60			9.5	GW	**WELL GRADED GRAVEL w/ SILT AND SAND (GW)** - brn (7.5YR5/4), 55% subang to ang met gravel up to 4cm, 25% f to c sand, 20% silty fines, dense, moist to dry - soil dries out	Collected Isoflow sample
65					- lt grey (10YR7/2) and powder dry - moist sandy zone, 55% gravel, 35% sand, 10% fines - dry silty lt grey GW below 65'	Drill rate slows to 2' / min
70				SW	**WELL GRADED SAND w/ GRAVEL (SW)** - yellowish brn (10YR5/4), 35% subang met gravel up to 4cm, 60% subrnd sand, 5% silty fines, loose, moist to wet	Moderate Drill Rate

CH2MHILL

PROJECT NUMBER: 326128.01.16.EN

BORING NUMBER: *MW-47*

SOIL BORING LOG - DRAFT FOR DISCUSSION

PROJECT NAME: IMPM Drill Program		**HOLE DEPTH (ft):** 288.0	**DRILLING CONTRACTOR:** Prosonic Corp. Phoenix, AZ	
SURFACE ELEVATION: 482.6 ft. MSL	**NORTHING (CCS NAD 27 Z 5):** 2,103,450.05	**EASTING (CCS NAD 27 Z 5):** 7,615,629.49	**DATE STARTED:** 02/27/2006	**DATE COMPLETED:** 03/13/2006
DRILLING METHOD: Rotosonic			**DRILLING EQUIPMENT:** Sonic AT (track mounted)	
LOCATION: PG&E Compressor Station - Flood Plain, Topock, California			**LOGGED BY:** B. Moayyad, K. Ebel	

DEPTH BGS (feet)	SAMPLE INTERVAL	SAMPLE TYPE/ NUMBER	SAMPLE RECOVERY (ft)	USCS CODE	SOIL DESCRIPTION SOIL NAME, USCS SYMBOL, COLOR, PERCENT COMPOSITION, GRADING, GRAIN SHAPE, MINERALOGY, DENSITY/CONSISTENCY, STRUCTURE, MOISTURE.	COMMENTS DRILLING OBSERVATIONS AND OPERATIONS, DAILY START AND END TIMES , DRILL RATE, REFUSALS, SAMPLING AND TESTING NOTES.
			6	SP	**POORLY GRADED SAND w/ SILT (SP)** - brn (7.5YR4/4), 5% subrnd to subang met gravel up to 4cm, 85% f to c sand, 10% fines, poorly graded, wet, no odor	
145			3	SM	**SILTY SAND W/ GRAVEL (SM)** - brn (7.5YR4/4), 20% subang to subrnd gravel up to 6cm, 60% f to c sand, 20% silty fines, well graded, m consolidated, met, wet, no odor	
150			5	SM	**SILTY SAND w/ GRAVEL (SM)** - dk yellowish brn (10YR4/4), 25% subang to subrnd up to 4cm met gravel, 60% well graded f to c sand, 15% fines, wet, no odor	
155			4	SW	**WELL GRADED SAND w/ SILT AND SAND (SW)** - dr yellowish brn (10YR4/4), 10% subang to subrnd up to 3cm met gravel, 75%well graded f to c sand, 15% fines, moist to wet	
			2	SW	**SILTY SAND (SM)** - brn (7.5YR4/4), 5% ang to subrnd met gravel up to 1.5cm increasing with depth, 85% poorly graded m to c sand, 10% fines, loose, wet	
			2	SM	**SILTY SAND w/ GRAVEL (SM)** - dk yellowish brn (10YR4/4), 15% subang to subrnd up to 2.5cm met gravel, 75% well graded f to c sand, 10% fines, mostly met, trace chert, loose, wet, no odor	Collected Isoflow sample
160			4	SM	**SILTY SAND W/ GRAVEL (SM)** - brn (7.5YR4/4), 25% subang to subrnd gravel up to 6.5cm, 60% m to c sand, 15% silty fines, well graded, m consolidated, met, wet, no odor	Drill rate = 0.75' to 1.5' / min
165			4	SW	**SILTY SAND (SW)** - mottled dk reddish brn (5YR3/4), 10% subang to subrnd gravel up to 2.5cm, 50% well graded f to m sand, 40% silt, metamorphic, dry to damp, no odor, interbedded sandy silt laminations	
170			5.5	SW	**SAND w/ GRAVEL (SW)** - dk reddish brn (5YR3/4), 20% subang to subrnd gravel up to 5cm, 75% f to c sand, 5% fines, well graded, loose, met, wet	
175			2.5	SM	**SILTY SAND w/ GRAVEL (SM)** - brn (7.5YR4/4), 15% subang to subrnd gravel, 70% f to m sand, 15% fines, poorly graded, met,increasingly consolidated, slightly to moderately calcareous, moist to wet	

PROJECT NUMBER:	BORING NUMBER:
326128.01.16.EN	*MW-47*

SOIL BORING LOG - DRAFT FOR DISCUSSION

PROJECT NAME: IMPM Drill Program		**HOLE DEPTH (ft):** 288.0	**DRILLING CONTRACTOR:** Prosonic Corp. Phoenix, AZ	
SURFACE ELEVATION: 482.6 ft. MSL	**NORTHING (CCS NAD 27 Z 5):** 2,103,450.05	**EASTING (CCS NAD 27 Z 5):** 7,615,629.49	**DATE STARTED:** 02/27/2006	**DATE COMPLETED:** 03/13/2006
DRILLING METHOD: Rotosonic			**DRILLING EQUIPMENT:** Sonic AT (track mounted)	
LOCATION: PG&E Compressor Station - Flood Plain, Topock, California			**LOGGED BY:** B. Moayyad, K. Ebel	

DEPTH BGS (feet)	SAMPLE INTERVAL	SAMPLE TYPE/ NUMBER	SAMPLE RECOVERY (ft)	USCS CODE	SOIL DESCRIPTION SOIL NAME, USCS SYMBOL, COLOR, PERCENT COMPOSITION, GRADING, GRAIN SHAPE, MINERALOGY, DENSITY/CONSISTENCY, STRUCTURE, MOISTURE.	COMMENTS DRILLING OBSERVATIONS AND OPERATIONS, DAILY START AND END TIMES , DRILL RATE, REFUSALS, SAMPLING AND TESTING NOTES.
285			0	BR	**MIOCENE CONGLOMERATE BEDROCK (BR)** - 60% well graded subang to rnd gravel up to 10cm, 30% well graded sand, 10% fines, very calcareous, well consolidated to mostly hard, mod to very altered locally, mostly met, dry to moist	
					Boring Terminated at 288 ft	

ABBREVIATIONS

cc = continuous core run
brn = brown
lt = light
dk = dark
vf = very fine-grained
f = fine-grained
m = medium-grained
c = coarse-grained
vc = very coarse-grained
ang = angular
subang = subangular
subrnd = subrounded
rnd = rounded
br = bedrock formation
ss = sandstone
conglom = conglomerate
comptd = compacted
qtz = quartz

CH2MHILL

ATTACHMENT B

Unified Soil Classification System and Logging Criteria

GENERAL SOIL CATEGORIES			SYMBOLS		TYPICAL SOIL TYPES
COARSE GRAINED SOILS More than half is larger than No. 200 sieve	GRAVEL More than half coarse fraction is larger than No. 4 sieve size	Clean Gravel with little or no fines	GW		Well Graded Gravel, Gravel-Sand Mixtures
			GP		Poorly Graded Gravel, Gravel-Sand Mixtures
		Gravel with more than 12% fines	GM		Silty Gravel, Poorly Graded Gravel-Sand-Silt Mixtures
			GC		Clayey Gravel, Poorly Graded Gravel-Sand-Clay Mixtures
	SAND More than half coarse fraction is smaller than No. 4 sieve size	Clean sand with little or no fines	SW	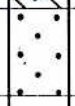	Well Graded Sand, Gravelly Sand
			SP		Poorly Graded Sand, Gravelly Sand
		Sand with more than 12% fines	SM		Silty Sand, Poorly Graded Sand-Silt Mixtures
			SC		Clayey Sand, Poorly Graded Sand-Clay Mixtures
FINE GRAINED SOILS More than half is smaller than No. 200 sieve	SILT AND CLAY Liquid Limit Less than 50%		ML		Inorganic Silt and Very Fine Sand, Rock Flour, Silty or Clayey Fine Sand, or Clayey Silt with Slight Plasticity
			CL		Inorganic Clay of Low to Medium Plasticity, Gravelly Clay, Sandy Clay, Silty Clay, Lean Clay
			OL		Organic Clay and Organic Silty Clay of Low Plasticity
	SILT AND CLAY Liquid Limit Greater than 50%		MH		Inorganic Silt, Micaceous or Diatomaceous Fine Sandy or Silty Soils, Elastic Silt
			CH		Inorganic Clay of High Plasticity, Fat Clay
			OH		Organic Clay of Medium to High Plasticity, Organic Silt
HIGHLY ORGANIC SOILS			PT		Peat and Other Highly Organic Soils

UNIFIED SOIL CLASSIFICATION SYSTEM

JOB NUMBER	DATE	APPROVED	PLATE

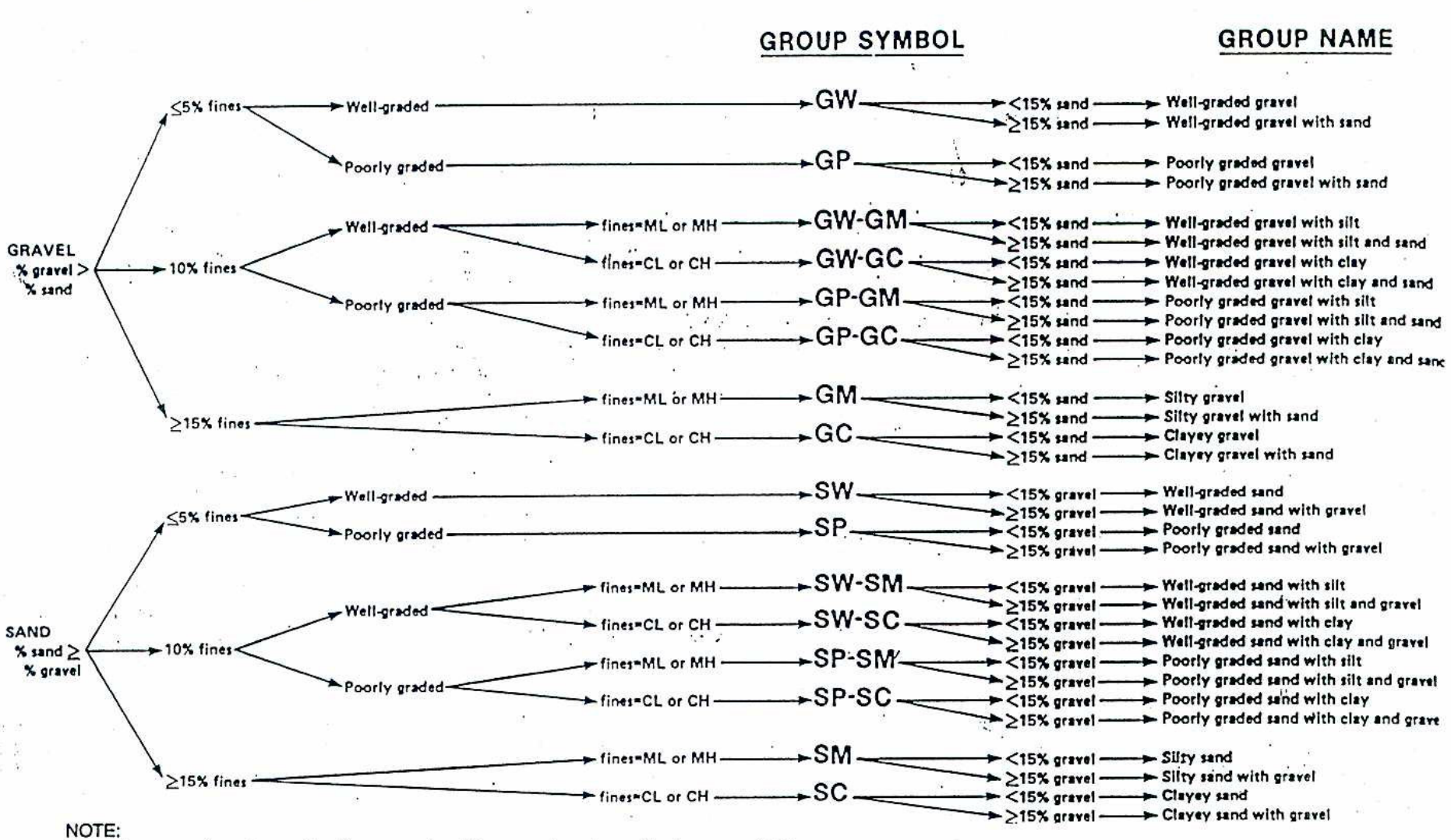

NOTE:
Percentages are based on estimating amounts of fines, sand, and gravel to the nearest 5%
(After ASTM Designation D2488 Standard Test Method for Classification of Soils for Engineering Purposes)

Flow Chart for Classifying Coarse-grained Soil
(50% or more retained on No. 200 sieve)
Field Guide for Soil Classification and Logging Procedures

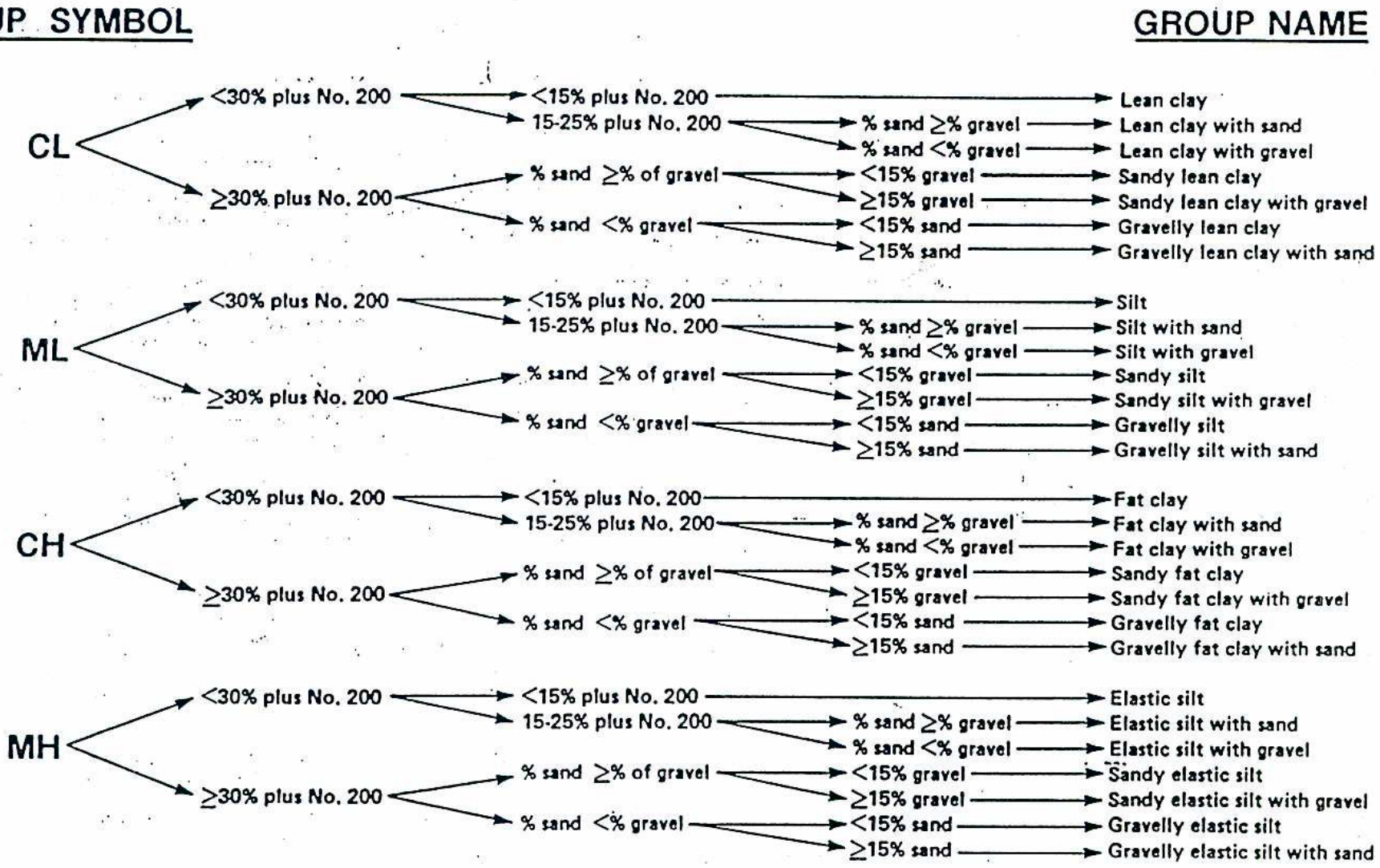

NOTE:
Percentages are based on estimating amounts of fines, sand, and gravel to the nearest 5%
(After ASTM Designation D2488 Standard Test Method for Classification of Soils for Engineering Purposes)

Flow Chart for Classifying Fine-grained Soil
(50% or more passing No. 200 sieve)
Field Guide for Soil Classification and Logging Procedures

similar, the material is classified as poorly graded or well sorted. If fines represent less than 5 percent of the total mass, the symbol SP is used for a poorly-graded sand and SW for a well graded sand. If silts and/or clays exceed 12 percent, the symbols GC, SC, GM, and SM are used, respectively.

If the silts and clays are between 5 to 12 percent of the total sample weight, a dual classification with two group symbols is used. The first symbol is GW, GP, SW, or, SP, and the second is GC, GM, SC, or SM. The group name corresponds to the first group symbol plus the modifying words "with clay" or "with silt" to indicate the plasticity characteristics. If the fines plot on the CL-ML range on the plasticity chart (Figure 2-2), possible dual classification group names are:

GW-GM	well graded gravel with silt
GW-GC	well graded gravel with clay
GP-GM	poorly graded gravel with silt
GP-GC	poorly graded gravel with clay
SW-SM	well graded sand with silt
SW-SC	well graded sand with clay
SP-SM	poorly graded sand with silt
SP-SC	poorly graded sand with clay

If silts and clays exceed 12 percent of the total weight of sample, the modifiers "M" and "C" are used, respectively. If a sand or gravel has more than 15 percent of the other coarse-grained constituent, the words "with gravel" or "with sand" are added to the group name. A flow chart for classifying coarse-grained soils is presented in Figure 2-3.

2.2 Fine-grained Soils

Particles passing the No. 200 sieve are silts (M) and clays (C). These soils must undergo testing in order to differentiate between them. Typical tests used are: dry strength, dilatancy, toughness, and plasticity. These terms are further discussed in Tables 2-2 through Table 2-6. Silts have little or no dry strength when dry, while clays have considerable dry strength. Dry strength, dilatancy, and toughness are also used to identify the fine-grained fraction of coarse-grained soils.

TABLE 2-2
Criteria for Describing Dry Strength

Description	Criteria
None	The dry specimen crumbles into powder with the mere pressure of handling.
Low	The dry specimen crumbles into powder with some finger pressure.
Medium	The dry specimen breaks into pieces or crumbles with considerable finger pressure.
High	The dry specimen cannot be broken with finger pressure. The specimen will break into pieces between the thumb and a hard surface.
Very high	The dry specimen cannot be broken between the thumb and a hard surface.

TABLE 2-3
Criteria for Describing Dilatancy

Description	Criteria
None	There is no visible change in the specimen.
Slow	Water appears slowly on the surface of the specimen during shaking, and does not disappear, or disappears slowly upon squeezing.
Rapid	Water appears quickly on the surface of the specimen during shaking, and disappears quickly upon squeezing.

TABLE 2-4
Criteria for Describing Toughness

Description	Criteria
Low	Only slight pressure is required to roll the thread near the plastic limit. The thread and the lump are weak and soft.
Medium	Medium pressure is required to roll the thread to near the plastic limit. The thread and the lump have medium stiffness.
High	Considerable pressure is required to roll the thread to near the plastic limit. The thread and the lump have very high stiffness.

TABLE 2-5
Identification of Inorganic Fine-grained Soils from Manual Tests

Soil Symbol	Dry Strength	Dilatancy	Toughness
ML	None to low	Slow to rapid	Low or thread cannot form
CL	Medium to high	None to slow	Medium
MH	Low to medium	None to slow	Low to medium
CH	High to very high	None	High

TABLE 2-6
Criteria for Describing Plasticity

Description	Criteria
Nonplastic	A 1/8-inch (3-mm) thread cannot be rolled at any water content.
Low	The thread can barely be rolled, and the lump cannot be formed when drier than the plastic limit.
Medium	The thread is easy to roll, and not much time is required to read the plastic limit. The thread cannot be re-rolled after reaching the plastic limit. The lump crumbles when drier than the plastic limit.
High	It takes considerable time rolling and kneading to reach the plastic limit. The thread can be re-rolled several times after reaching the plastic limit. The lump can be formed without crumbling when drier that the plastic limit.

Fine-grained soils are accurately determined in the laboratory using the Atterberg Limits test. This test include liquid limit, plastic limit, and plasticity index measurements. The liquid limit is the water content of a soil at the point of transition from a plastic to a liquid state. The plastic limit is the water content of a soil at the point of transition from a semisolid to a plastic state. The plasticity index is the difference between the liquid limit and the plastic limit.

As shown in the Figure 2-2, five fields have been identified. These include:

- Silty Clays (CL), Organic Silts (OL) or Organic Silty Clays (OL) of low plasticity
- Fat Clays (CH) and Organic Clays (OH)
- Inorganic Silts (ML) and Organic Silty Clays (OL) of low plasticity
- Silts (MH) and Organic Clays (OH) of a high plasticity
- Silty Clays to Clayey Silt (CL-ML) of low plasticity

Fine-grained soils with a liquid limit > 50 are modified by the symbol H (MH or CH), and those with a liquid limit < 50 are modified by the symbol L (ML or CL). Fine-grained soils containing 30 percent or more coarse-grained fraction should be modified by descriptive terms, such as "gravelly" or "sandy." If the coarse fraction is between 15 and 30 percent, the words" with sand and/or gravel" should be added to the group name. A flow chart for classifying fine-grained soils is presented in Figure 2-4.

2.3 Organic Soils

To classify organic soils, the percentage organic material present in the soil as well as the non-organic fines must be estimated. When the organic content ranges from 18 to 36 percent, the material is an organic clay or an organic silt, depending on the nature of the fine-grained constituents. When the organic content is between 36 and 90 percent, the material is designated a muck or peaty muck (OL or OH). A flow chart for classifying organic soil is presented in Figure 2-4. The term "peaty" is added if the organic remains are

SOP-B5

Decontamination of Personnel and Equipment, Well Drilling, and Subsurface Sampling and Investigations
Standard Operating Procedures for PG&E Topock Program

This standard operating procedure provides general guidelines for the decontamination of personnel, sampling equipment, and monitoring equipment used in potentially-contaminated areas.

REQUIRED DOCUMENTS

1) Event-specific sampling and analysis plan (SAP).
2) Applicable project work plan or monitoring plan, which includes a health and safety plan. Refer to Topock Program *Sampling, Analysis, and Field Procedures Manual* and *Quality Assurance Project Plan*, as required.

PREPARATION AND SETUP

1) Initiate field log sampling book for activity.
2) Inspect all equipment necessary to carry out activities detailed in event-specific SAP.
3) Review decontamination guidelines for equipment necessary to carry out activities.

Equipment List

- Demonstrated analyte-free, deionized water (specifically, ASTM Type II water)
- Distilled water
- Potable water; must be from a municipal water supplier, otherwise an analysis must be run for appropriate volatile and semivolatile organic compounds and inorganic chemicals (e.g., Target Compound List and Target Analyte List chemicals)
- 2.5% (W/W) Liquinox® and water solution
- Large plastic pails or tubs for Liquinox® and water, scrub brushes, spray or squirt bottles for Liquinox® solution, and distilled or deionized water, plastic bags, and sheets
- Department of Transportation (DOT)-approved 55-gallon drum for disposal of waste
- Nitrile or latex gloves
- Decontamination pad and steam cleaner/high pressure cleaner for large equipment

GUIDELINES

Personnel Decontamination

Decontamination should be performed after completion of tasks whenever personnel come in contact with contaminated (or potentially-contaminated) soils or fluids. Full or emergency decontamination should be performed when contaminant concentrations are not known and when potentially-contaminated fluids come into contact with skin beneath clothing, eyes, nose, or ears.

Procedures for full/emergency decontamination are to:

1) Remove contaminated clothing.

2) Step into containment area (decontamination pad or large pail).

3) Rinse away fluids and soil.

4) Wash skin with Liquinox® solution in such a way as to not abrade skin. (Liquinox® solution should be made with potable water and sufficient detergent to create foamy suds.) Eyes and mucus membranes in contact with contaminants must be washed with eye wash or drinking water continuously for at least 15 minutes.

5) Rinse with potable water.

6) If no other clothes are available, wash affected clothes in Liquinox® solution prior to donning. If other clothes are available, contaminated clothes may be isolated for later wash or disposed of along with personal protective equipment (PPE).

7) Any PPE worn (including disposable latex booties, gloves, and disposable coveralls) should be discarded into DOT-approved 55-gallon drum located at the MW-20 bench.

8) Dispose of wash and rinseate water in an appropriate container with other chromium contaminated fluids. These fluids may be taken to the MW-20 bench for treatment or to a Baker® tank within the PG&E facility for containerization.

9) Replace all appropriate clothing and PPE before resuming work or departing site.

Moist soil or water containing known concentrations of hexavalent chromium less than 50 parts per billion that comes into contact with hands need not require full decontamination. Dry soil containing chromium that comes into contact with clothing can also be decontaminated in an abbreviated manner.

Daily decontamination and minor exposure contact decontamination procedures are to:

1) Wash hands and skin that comes in contact with soils or water that may contain small concentrations of chromium as soon as possible after contact. Wash with Liquinox® solution and rinse with potable water.

2) If contaminated soil or water contacts hands through hole or over lip of gloves, remove gloves and wash hands thoroughly before donning new gloves.

3) Discard gloves into DOT-approved 55-gallon drum located on the MW-20 bench at the end of the day or event.

4) Remove coveralls or dry soils from clothing before leaving site. Clothing contaminated by moist soil or water containing hexavalent chromium should be removed and promptly washed.

5) At the end of the work day, shower entire body, including hair, either at the work site or at hotel.

Sampling Equipment Decontamination—Groundwater Sampling Pumps

Sampling pumps are decontaminated after each use as follows:

1) Don waterproof (nitrile or latex) gloves.

2) Run pump and reusable tubing through with Liquinox® solution (made with potable water) so that the pump and all portions or the tubing have been flushed with the solution for at least 30 to 60 seconds. More time is required if water is present in the tubing. If unsure, run for 2.5 minutes. Outside of the tubing should also be submerged and washed in the solution.

3) Run pump and reusable tubing through first rinse (with potable or distilled water) so that the pump and all portions or the tubing have been flushed with the solution for at least 60 seconds. More time is required if any suds are present in the pump or tubing.

4) Run pump and reusable tubing through second rinse (with distilled water) so that the pump and all portions or the tubing have been flushed with the solution for at least 30 seconds. More time is required if water from first rinse is present in tubing.

5) Equipment blank samples may be taken at this point using ASTM Type II water or distilled water as required by laboratory.

Sampling Equipment Decontamination—Other Equipment

Reusable sampling equipment is decontaminated after each use as follows:

1) Don nitrile or latex gloves.

2) Wash all equipment surfaces that contacted the potentially contaminated soil/water with Liquinox® solution (made from potable water). Water quality meters that are not placed within wells should not be washed with detergent, as this will degrade sensors; these meters should be double-rinsed. Any portion of equipment that is placed inside wells (including cables and pipe) and that comes in contact with moisture should be washed with detergent.

3) Rinse equipment and supplies with potable water, if the equipment is not used to collect groundwater or soil samples. Equipment used to collect samples or take water quality parameters should be rinsed with distilled water.

4) Air dry or towel dry with paper towels.

5) Collect all rinseate and dispose of in Baker® tank within the PG&E facility or Denbeste® tank at the MW-20 bench.

6) Decontamination materials (e.g., plastic sheeting, tubing, etc.) that have come in contact with used decontamination fluids or sampling equipment will be disposed of in DOT-approved 55-gallon drums if highly contaminated. If not contaminated, equipment can be washed and disposed of in trash.

7) Preserved bottles may need to be washed before being packed or handed without gloves. The outsides of filled bottles should be rinsed and toweled dry to prevent contact with strong acids or based.

Heavy Equipment and Tools

Heavy equipment such as drilling rigs, drilling rods/tools, and the backhoe will be decontaminated upon arrival at the site and between locations as follows:

1) Set up a decontamination pad in designated area.

2) Steam clean heavy equipment until no visible signs of dirt are observed. This may require wire or stiff brushes to dislodge dirt from some areas.

KEY CHECKS AND ITEMS

- Clean with solutions of Liquinox® and potable water. Rinse with distilled or deionized water if equipment is used to collect samples or water readings; otherwise, rinse with potable water.
- Equipment placed within wells should be thoroughly decontaminated and before being placed in a well. All potions of this equipment that come into contact with moisture should be decontaminated.
- Decontaminate filled sample bottles before relinquishing them to anyone.

SOP-B7

Homogenization of Soil and Sediment Samples
Standard Operating Procedures for PG&E Topock Program

The homogenization of soil and sediment samples is performed to minimize any bias of sample representativeness introduced by the natural stratification of constituents within the sample. Standard techniques for soil and sediment homogenization and equipment are provided in this SOP. These procedures do not apply to aliquots collected for volatile organic compounds (VOCs) or field gas chromography screening; samples for these analyses should NOT be homogenized.

REQUIRED DOCUMENTS

1) Event-specific sampling and analysis plan (SAP).
2) Applicable project work plan or monitoring plan. Refer to Topock Program *Sampling, Analysis, and Field Procedures Manual* and *Quality Assurance Project Plan,* as required.
3) Topock Program Health and Safety Plan (HSP).
4) Previous sampling logs.
5) Blank sampling logs and field notebook.

PREPARATION AND SETUP

1) Review event-specific SAP or event-specific field instructions, previous sampling logs, Procedures Manual, and HSP.
2) Initiate field logbook for sampling activity.

EQUIPMENT LIST

- Sample containers
- Stainless-steel spoons or spatulas
- Stainless-steel pans
- Phthalate-free gloves

PROCEDURES

Sample Homogenization

1) Soil and sediment samples to be analyzed for semivolatiles, pesticides, polychlorinated biphenyls, metals, cyanide, or field x-ray fluorescence screening should be homogenized in the field.
2) After a sample is taken, a stainless-steel spatula should be used to remove the sample from the split spoon or other sampling device. The sampler should not use fingers to do this, as gloves may introduce organic interferences into the sample.

3) Samples for VOCs should be taken immediately upon opening the spoon and should not be homogenized.

4) Prior to homogenizing the soil or sediment sample, any rocks, twigs, leaves, or other debris should be removed from the sample.

5) The sample should be placed in a decontaminated stainless-steel pan and thoroughly mixed using a stainless-steel spoon. The soil or sediment material in the pan should be scraped from the sides, corners, and bottom, rolled into the middle of the pan, and initially mixed.

6) The sample should then be quartered and moved to the four corners of the pan. Each quarter of the sample should be mixed individually, then rolled to the center of the pan and mixed with the entire sample again.

Equipment Decontamination

1) All stainless-steel spoons, spatulas, and pans must be decontaminated following procedures specified in SOP *Decontamination of Personnel and Equipment* prior to homogenizing the sample.

2) A composite equipment rinse blank of homogenization equipment should be taken each day it is used.

SOP-B9

Drilling--Sonic Method
Standard Operating Procedures for PG&E Topock Program

REQUIRED DOCUMENTS

1) Event-specific sampling and analysis plan (SAP), Work Plan or event-specific field instructions. Planned borehole depth, proposed well construction/specifications, and field sampling summary table, if available.

2) Applicable project work plan or monitoring plan. Refer to Topock Program Sampling, Analysis, and Field Procedures Manual and QAPP (Procedures Manual), as required.

3) Topock Program Health and Safety Plan (HSP)

4) Previous sampling, drilling, or well construction logs from other boreholes or wells in the vicinity, if available

5) Blank sampling log and field notebook

Equipment List:

- Drilling rig (Sonic)
- Drill rods and core barrel

GUIDELINES

PRIOR TO INTRUSIVE ACTIVITIES AT ANY DRILLING LOCATION THE AREA WILL HAVE BEEN CLEARED OF ALL UTILITIES AND THE CLEARANCE RECORDED IN THE FIELD LOGBOOK. It is also the field team leader's responsibility to confirm that all required access permits are in place.

Prior to the start of drilling, the area of site activity will be identified and delineated using stakes and/or flagging. The extent of impact will be mineralized at all times and the delineated area of activity decreased when possible. All sensitive vegetation or habitats will be delineated with stakes and/or flagging and no impact will occur in these areas.

Sampling depths and total depths of holes shall be determined by temporary marking of drill equipment, by reference to standard equipment dimensions (for example, 5-foot hollow-stem auger flights), or by measurement using a fiberglass tape. Final total depth measurements will be confirmed using a weighted fiberglass tape. Observations by the field geologist or engineer shall be recorded directly in the borehole log.

The field borehole log is the standard form used to document subsurface geologic conditions. The borehole log is divided into two areas. One portion contains spaces for noting information on the drilling and sampling methods. The second portion contains space for noting lithologic descriptions. All sheets shall be filled out completely, legibly, and in ink. The borehole log will be filled out in the field at the time of the drilling and sampling. The original logs shall be permanent records, and information on the logs may not be

erased. If corrections are needed, information shall be crossed out with a single line and the correction shall be initialed and dated.

The use of water and drilling fluid to assist in sonic drilling for monitoring well installation will be avoided, unless required for such conditions as running sands or drilling bedrock formations.

Temporary outer casing, drill rods, core barrels, and other downhole drilling tools will be properly decontaminated prior to the initiation of drilling activities and between each borehole location. Core barrels and other downhole soil sampling equipment will also be properly decontaminated before and after each use.

Sonic inner casing (sample tube) will have an inside diameter of at least 3.25 inches. Samples may be collected for chemical analysis. For sonic drilling, these samples are collected in a metal trough. A continuous core is collected and the sample interval is selected from the length of core run.

Surface casing may be installed where soil borings will penetrate a confining layer or when there is risk of eroding soil during the drilling process if water is used.

PROCEDURES

Instructions for Completing Soil Boring Logs

Soil boring logs will be completed in the field log books. Information collected will be consistent with that required for Form D1586 (attached), a standard CH2M HILL form or an equivalent form that supplies the same information. Procedures will follow the SOP "*Soil*

Non-Core Collection Drilling

At locations or depths from which core collection is not required, drilling may proceed without the recovery of soil cores. The drilling will include advancing the larger outer casing and the use of water to facilitate cuttings removal from the boring. The inner casing drill rods may or may not be used, depending on the cuttings recovery when drilling with the larger outer casing.

Continuous Core Drilling

At locations or depths when core collection is required, drilling will proceed using an outer casing and an inner core sample tube. The inner core sampling tube will be advanced first without the use of water. Before removal of the sampling tube, the outer casing will be advanced, using water only as needed for cuttings removal, to the same total depth as the inner casing. The outer casing will stabilize the boring when the sampling tube is removed. The process is repeated in 10 to 20 foot intervals, as the lithology of the boring permits.

The length of each drilling interval should be adjusted depending on the lithology and the quality and recovery percentage of the sample cores retrieved. At locations with very hard drilling (i.e. with large cobbles or hard materials) or when percent recovery decreases, the drilling interval should be decreased until such time that the conditions change.

After retrieval of the inner sampling core tube, the minimally disturbed sample cores will be collected into plastic liner sleeves in intervals of 2 to 3 feet. The plastic sleeves will be

immediately sealed on both ends. The cores will be used for visual descriptions and may be used for analysis for geochemical and geotechnical parameters.

KEY CHECKS AND ITEMS

- Check entries to the soil boring log and field logbook in the field during sampling activities because the cores will be disposed at the end of the fieldwork, confirmation and corrections cannot be made later.
- Check that the sample numbers and intervals are properly specified.
- Ensure that drilling equipment is decontaminated prior to the beginning of work and between each borehole.
- All materials generated during sampling (debris, PPE, decontamination liquids, etc.) will be placed in approved IDW storage containers pending analysis and disposal off site as outlined in SOP-B6, *Disposal of Waste Fluids and Solids (IDW)*.

SOP-B11

Site Clearance and Permitting
Standard Operating Procedures for PG&E Topock Program

This standard operating procedure (SOP) addresses the procedures for site clearance and permitting at the Topock site. This SOP should be used to obtain proper site clearance and permits before any work is performed at a site.

REQUIRED DOCUMENTS

1) Applicable project work plan, event-specific sampling and analysis plan (SAP), and/or Procedures Manual, if applicable.

2) Topock Program Health and Safety Plan (HSP).

3) Site map with work locations identified.

PREPARATION AND SETUP

1) Review applicable project work plan, event-specific SAP, Procedures Manual, and HSP.

2) Identify locations where work will be performed, determine if any subsurface work will be needed.

3) Before the start of any work obtain approval by the appropriate land agencies (such as BLM, USFWS, County of San Bernardino). Activities located on PG&E property fall under the jurisdiction of the County; however, approval may also be required from BLM and/or USFWS for activities such as access, waste management, etc. Work in Topock, Arizona falls under the jurisdiction of the Arizona Department of Water Resources.

4) Before the start of any work obtain appropriate approval by the regulatory agencies. These include at a minimum the DTSC if in California, and ADEQ is in Arizona. Other regulatory approvals that may be required include, but are not limited to CDFG, USFWS, USACE and RWQCB. Approval from the Arizona Land Department may also be required for wells drilled in Arizona.

If subsurface work will be involved, follow the following steps:

1) Follow the guidelines of the Southern California Underground Service Alert (USA) agency to mark the edges of the work location as outlined on their web page (http://www.digalert.org). If in Arizona, the Arizona Blue Stake should be contacted for location of buried facilities (www.azbluestake.com). Make sure to:

   - Identify delineated areas with white markings with the requesters company name or logo within the pre-marked zones

   - Delineate the exact area of excavation with white paint through the use of dots or dashes, or a continuous solid line. Limit the size of each dash to approximately 6" in length and 1" width with interval spacing not less that approximately 4 feet. Dots of

approximately 1" diameter are typically used to define arcs or radii and may be placed at closer intervals in lieu of dashes. Limit width of lines to 1".

- For point locations (such as a soil boring or well) mark the exact location in the USA or Blue Stake box with a stake. Make sure the delineated area around the stake is of adequate radius (50 to 100 feet is appropriate for drilling).

2) Call USA at 1-800-227-2600 or Arizona Blue Stake at 1-800-782-5348 at least three working days before the start of work at the identified location and provide them with the information requested on the location request form. Be ready to give the location in terms of feet relative to I-40 and to Park Moabi Road when calling. You will be assigned a Dig Alert Number, file this number until work at the delineated area is complete. (The number does expire after two weeks and a new number may need to be obtained if work has been delayed.)

3) Mark the Dig Alert Number in the delineated area using white paint as soon as possible after calling USA or Arizona Blue Stake.

4) If the location is in a developed area, contact a private utility locator and have them perform a sweep of the delineated work area. Util-Locate at (866) 421-5325 is typically used for this service.

5) In some cases the utility companies may need to be contacted directly by CH2M HILL. If the following companies do not respond to the USA or Blue Stake ticket or if we are working in their easements, use the following contact information and procedures:

Southwest Gas: Main contact is Jim Default/702-365-2097 (The required minimum clearance distance from gas pipelines is 18-inches**.** Potholing may need to be performed in advance of design completion Southwest Gas should be called prior to construction activities). If Southwest Gas does not come to the site after the USA call, contact them at their Bullhead City office at (928) 763-7766

Southern California Gas Co.: Main contact is Frank Castro/818-701-4566; secondary contact is Martin Woodsworth/818-701-4543. If we need to work in their easement, we must provide a letter from BLM giving us permission to be on the property. Southern California Gas Co. also requires advance notification of construction activities. They may also require a copy of the design drawing, potholing activities, and the issuance of a "Non-Interference" letter, if applicable, before work can proceed. One of their representatives may need to be in the field when digging is occurring near their pipeline.

TransWestern Pipeline Co.: Main contacts are Ron Westbrook (ROW Department)/713-345-3067 and Mike Baxter (Operations)/928-757-3620. They may require potholing if proposed construction activities are near their pipelines. Crossing pipeline requires filling out a simple form.

Burlington Northern Santa Fe Railroad: Main contact is Greg Rousseau (BNSF)/909-386-4079. Prior to work in their easements submit the proper application with the $250 fee to the Staubach Company.

City of Needles Utility Dept: Main contact is Ron Myers/760-326-5700 (ext. 7 for the utilities department). Work activities may need to be a minimum of 10 to 15 feet from their utility poles.

6) Do not start subsurface work at the site until the delineated area has been marked or cleared by the appropriate utility agencies.

If the work includes a performing a well installation or abandonment, or drilling a boring in California:

1) Apply for a San Bernardino County well permit two to three weeks before the start of drilling (one permit per well; cost is /$212.00 per well). Obtain a permit application by calling the Environmental Health Services Department at 1-909-387-4666 (open Monday through Friday, 8:00 a.m. to 5:00 p.m. The fee schedule for permits is located at http://www.sbcounty.gov/ dehs/FEESCHEDULE/feeschedule.htm#wateranchor. Fill out the appropriate permit form and provide it to the California-licensed driller contracted to perform the well installation. The driller is expected to review and file the permit with the San Bernardino County Department of Environmental Health Services (Steve Sesler), address below.

Environmental Health Services
385 N. Arrowhead, 2nd Floor
San Bernardino, CA 92415-0160

2) A well permit needs to be obtained from San Bernardino County for well abandonment by the same procedure described in #11. Check the 'destruction' box on the same permit form used for well installation.

3) A permit also needs to be obtained from San Bernardino County for any boring that reaches to or below the water table, even if a well is not actually installed. The permit process is the same as described in #11.

If the work includes a performing a well installation or abandonment, or drilling a boring in Arizona:

1) Apply for an Arizona Department of Water Resources (DWR) well permit two to three weeks before the start of drilling (one permit per well; cost is /$150.00 per well). Obtain a permit application by calling the DWR at 1-(602) 771-8500 (open Monday through Friday, 8:00 a.m. to 5:00 p.m. MST). All ADW permits and instructions can be found at http://www.azwater.gov/dwr/Content/Find_by_Category/Permits_Forms_Applications/default.htm
Fill out the appropriate permit form (55-44A) and provide it to the Arizona-licensed driller contracted to perform the well installation. The driller is expected to review and file the permit with the Arizona Department of Water Resources address below.

Arizona Department of Water Resources
3550 N. Central Avenue
Phoenix, AZ 85012

Upon completion of the well, the driller must submit a Driller Report and Well Log (Form 55-55) to the DWR within 30 days. The form and instructions can be found on the DWR webpage.

2) A well abandonment permit needs to be obtained from the Arizona Department of Water Resources prior to well abandonment (form 55-38). Exploratory wells that are abandoned before the drill rig leaves the site are exempt from the well abandonment permit requirements. The well abandonment form and instructions are included as Attachment 4 and can be found at the ADW webpage . No fee is required for filing this form.

   Within 30 days of well abandonment a Well Abandonment Completion Report (Form 55-58) must be filed with the DWR.

SOP-B15

Volatile Organic Compound (VOC) Soil Sampling
Standard Operating Procedures for PG&E Topock Program

This standard operating procedure (SOP) provides guidance for Volatile Organic Compound (VOC) sample collection from soil. Additional guidance for sample collection, preservation and handling is provided in Section 4.0 of the PG&E Quality Assurance Project Plan (QAPP). SOP-B2 and SOP-B3 *Sampling, Analysis, and Field Procedures Manual, PG&E Topock Program* (CH2M HILL, 2005) provides additional guidance for soil characterization and logging.

Required Documents

1) Event-specific planned sample table (PST).
2) Applicable project work plan or monitoring plan. Refer to the Procedures Manual and QAPP as required.
3) Topock Program Health and Safety Plan (HSP).
4) Previous sampling, drilling, or well construction logs from other boreholes or wells in the vicinity, if available.
5) Field notebook.
6) Database generated sampling logs.

Preparation and Setup

1) Review event-specific PST or event-specific field instructions, previous sampling logs, Procedures Manual, and HSP.
2) Coordinate with the Project Chemist for coolers, sample containers, and courier pickup of the samples.
3) Initiate field logbook for sampling activity.
4) Review sampling procedures and planned sample depths with field crew.
5) Field-check and set up equipment for sampling, decontamination, spill prevention, and health and safety.

Equipment List

- Pre-labeled soil sample containers appropriate for sample analysis and preservation as called for in PST and QAPP (Pre-weighed Vials, glass jars, auger sleeves, etc.)
- Soil sampling equipment (stainless steel trowel, spatula, EnCore™ Sampler, EasyDraw Syringe®, or a disposable plastic syringe with a barrel smaller than the neck of the soil vial with the cap removed from the plunger, etc.)
- Field notebook

- Sediment sampling logs generated from database
- Blue or black waterproof or permanent ink pens
- Trash bags
- Paper towels
- Decontamination equipment (Alconox® solution in spray bottle, brushes, buckets, rinse water spray bottle)
- Water level indicator
- Distilled water
- Coolers with ice
- Protective waterproof gloves (nitrile or latex)

SOIL SAMPLING LOGS DOCUMENTATION

Soil sampling logs or boring logs (SOP-B2 and SOP-B3 *Sampling, Analysis, and Field Procedures Manual, PG&E Topock Program* [CH2M HILL, 2005]) will be completed at the time of sample collection. Items to be documented on the sampling log include:

6) **Sample Interval:** The top and bottom depth of each sample run should be recorded on the log. Sampling includes samples collected for analysis as well as retrieved for logging purposes.

7) **Sample Type and Number:** Enter the sample type and number consistent with the sampling and analysis plan at the correct depth intervals. An "x" should be placed across the vertical interval where the environmental soil, grab groundwater, or geotechnical sample was collected.

8) **Sample Recovery:** Enter the length of retrieved sample to the nearest inch of sample recovered. Record total length and percent of sample recovered.

9) **Sampling:** Sampling difficulties shall be noted. The top of the sample shall be marked on the container.

10) **Water Levels:** Water-level measurements, where groundwater is encountered, are required for each boring. Changes in soil moisture shall be noted and, if there is no water encountered, a note to that effect shall be included on the sediment sampling log. The date and time of water-level measurements shall be documented.

At a minimum, sample identifiers (IDs) should be noted on sampling logs at the depth collected. When time and space allows, a summary of analytical sample information can be included.

VOLATILE ORGANIC COMPOUNDS (VOC) SOIL SAMPLING - COLLECTION OF SAMPLES FOR ANALYSIS

It is recommended (EPA Method 5035A) that VOC soil samples be collected in a coring device to minimize volatilization and soil disturbance to prevent constituent losses. After

collection, the sample shall be immediately transferred to the sample vial (to be used for analysis) and stored for no longer than 48 hours at 4 C ± 2° C prior to analysis. Freezing the samples between -7 and -20° C within 48 hours and maintaining them frozen until analysis allows a 14 day holding time. Chemical preservation techniques are also available as options.

Use either a commercially available sampler (such as the EnCore™ Sampler or EasyDraw Syringe®) or a disposable plastic syringe to collect VOC soil samples. To use a syringe, cut the syringe end of the barrel off and removed the rubber 'cap' from the plunger, prior to sampling (barrel of the syringe needs to be smaller than the neck of the soil vial). One sampler is needed for each sample aliquot to be collected (typically the laboratory will supply the sampler along with the sample vials, but arrangements must be made prior to sampling).

11) Weigh 3 empty samplers and note the weight. Using the same 3 samplers collect several trial samples (try to collect 5.0 ± 0.2g). Weigh each trial sample (total weight – syringe weight = sample weight) and note the length of the soil column in the syringe. Use the data to determine the length of soil in the syringe that corresponds to 5.0 grams. The length of the soil column equal to 5 grams becomes the volume for the project location. Discard each trial sample.

12) The VOC sample collection process should be completed in the least amount of time as possible in order to minimize the loss of VOCs. Sample collection should be done with the least amount of disturbance/disruption as possible. Additional, exposure of the sampling location's surface layers should be considered if the material may have already lost VOCs or if it may have been contaminated by other means. Removal of surface layers can be accomplished by scraping the surface using a clean spatula, scoop, knife, or shovel.

13) Insert a clean coring tool into a freshly exposed surface; do not trap air between the sample and the plunger. For greater ease in pushing into the solid matrix, the front edge of these tools can be sharpened. The optimum diameter of the coring tool depends on the size of the opening of the collection vial (tool should fit inside mouth), the sample characteristics (e.g., particles size, cohesion), and volume of sample required for analysis. After an undisturbed sample has been obtained by pushing the barrel of the coring tool into a freshly exposed surface, quickly wipe the exterior of the barrel with a clean disposable towel. Transfer the sample into a pre-weighted vial by gently pushing the plunger, (use extreme care to ensure none of the preservative is lost if the sample is collected into a pre-preserved vial – water, methanol or NaHSO4), verify the sealing surfaces are clean, and secure the cap (the transfer should take less than 10 seconds). **Note: Samples are collected in pre-weighed and pre-labeled vials provided by the laboratory; no additional labels are to be added to the vials!** Complete the label attached by the laboratory (fill in sample ID-only). All vials from one sample location will be placed into a zip-lock bag and the sample information shall be recorded on a label attached to the bag.

14) As a last resort non-cohesive granular samples (sand, gravel, or a mixture of gravel and fines) that can not be easily obtained or transferred using coring tools, can be quickly sampled using a decontaminated stainless steel spatula or scoop. Decontamination is

covered in section 3.3 of the PG&E Program QAPP and in SOP-B5 *Sampling, Analysis, and Field Procedures Manual, PG&E Topock Program* (CH2M HILL, 2005).

15) As with the collection of aqueous samples for volatiles, collect at least 3 replicate samples. This will allow the laboratory an additional sample for reanalysis, if needed. The replicate samples should be taken from the same soil stratum or the same section of the solid waste being sampled, and within close proximity to the location from which the original sample was collected.

16) In addition, if a VOC sample is the only sample to be collected at a given location, collect at least one additional aliquot for the determination of percent moisture. Trip blanks and equipment blanks should be collected per the PG&E Program QAPP. However, trip blanks do not apply to samples that have been frozen upon collection.

17) Transport the sample at 4° C, to the lab in less than 48 hours or freeze (reagent water preserved samples to between -7 and -20° C) within 48 hours and transport frozen.

18) Complete Soil Sampling Logs and Chain of Custody Logs.

SOP-B16

Field-portable X-Ray Fluorescence Soil Sampling
Standard Operating Procedures for PG&E Topock Program

This Standard Operating Procedure (SOP) describes the analysis of in situ and ex situ soil and debris samples using a field portable x-ray fluorescence (XRF) instrument. SOP-B2 and SOP-B3 in the *Sampling, Analysis, and Field Procedures Manual, PG&E Topock Program* (SAFPM) (CH2M HILL, 2005) provides additional guidance for soil characterization and logging.

Required Documents

1. Event-specific planned sample table (PST).
2. Applicable project work plan or monitoring plan. Refer to the SAFPM and the *PG&E Program Quality Assurance Project Plan, Revision 2, Topock Compressor Station, Needles, California* (CH2M HILL, 2012) as required.
1. Topock Program Health and Safety Plan.
3. Field notebook.
4. Database generated chain-of-custody.
5. XRF Functional Check Log

Preparation and Setup

1. Review event-specific PST or event-specific field instructions, previous sampling logs, SAFPM, and health and safety plan.
2. Coordinate with the project chemist for coolers, sample containers, and courier pickup of the samples.
3. Initiate field logbook for sampling activity.
4. Initiate electronic file for XRF instrument download.
5. Review sampling procedures and planned sample depths with field crew.
6. Field-check and set up equipment for functional checks, sampling, decontamination, spill prevention, and health and safety.

Equipment List

- Niton XRF meter and stand
- Spare battery chargers
- Field notebook
- Trowel for smoothing soil surfaces

- Reusable plastic bags or stainless steel tray
- Disposable sample cups with x-ray film and lids
- X-ray window film (Mylar, Kapton, Spectrolene, polypropylene, or equivalent; 2.5 to 6.0 micrometers thick)
- Disposable scoops, stainless-steel spoons, or other appropriate mixing tools
- Appropriate quality assurance/quality control (QA/QC) standards and blank sand
- Chemwipes
- Decontamination equipment (Alconox solution [or equivalent] in spray bottle, brushes, buckets, rinse water spray bottle) for mixing tools and trowels
- Protective waterproof gloves (nitrile or latex)

XRF Analysis Documentation

The XRF sample results will be recorded by the associated software in an Excel format. The files will be downloaded at the end of each day and emailed to the project chemist for review. Any additional sample logging and sample collection should follow the protocol and procedures found in the appropriate SOP. Detailed notes should be recorded in the sampler's field notebook or in a log generated from the field database. Items to be documented on the sampling log include (include as much of the following information in the XRF software as possible):

1. Record type of boring or excavation equipment and the total boring or excavation depth.
2. If multiple samples are being collected at one location at a variety of depths, record all sample depths.
3. Record date and time of sample collection in addition to the full sample ID that is listed in the PST.
4. Sampling difficulties shall be noted (that is, difficult slope or abnormal debris in sample location).
5. Analysis start time and the source count time (that is, 60, 90, or 120 seconds, etc.) will be documented on sample collection sheet. Analysis and count time are automatically recorded in the XRF software.

Field-portable XRF Soil Sampling, Collection of Samples for Analysis

In Situ Sample Preparation

When the soil moisture is less than 20 percent, the error associated with moisture may be minimal. If areas are encountered where the moisture content is greater than 20 percent (moisture is visible), consult with the project chemist for options available for proceeding with field analysis.

For in situ analysis of soil:

1. Remove large or nonrepresentative debris from the selected location. This debris includes rocks, gravel, vegetation, and concrete.
2. Homogenize the location chosen for analysis by mixing in place an area approximately 4 inches by 4 inches by 3 inches deep using a clean (or decontaminated) stainless-steel or disposable spoon. Smooth and firmly tamp the location to provide as flat and smooth an area as possible.
3. Stretch a section of x-ray window film over the area to be tested to maintain a dust-free environment for the nose of the instrument. (Use in situ analysis for metals-only samples.)
4. To initiate a reading, position the nose of the XRF against the x-ray film, squeeze the shutter release, and firmly press the instrument flat against the surface. Source count times for in situ analysis usually range from 3 to 5 minutes, varying among instruments and depending on requirement detection limits.
5. After the in situ field screening is performed, inspect the nose of the instrument for contamination, which may affect future analysis. If necessary, clean it with a soft cloth or tissue.

For confirmation samples, or where samples for organic analysis are to be collected, the soil samples should be treated as ex situ samples, below.

For in situ analysis of debris:

1. In some cases, the large or nonrepresentative debris removed in Step 1 above may need analysis. The debris for analysis can include rocks, wood, concrete, etc.
2. Analyze debris that is too large or difficult to homogenize by locating multiple locations on the surface of the debris that are as flat and smooth as possible. Scan a minimum of three locations or approximately 10 percent of the surface area (whichever is greater).
3. Stretch a section of x-ray window film over the area to be tested to maintain a dust-free environment for the nose of the instrument. (Use in situ analysis for metals only samples.)
4. To initiate a reading, position the nose of the XRF against the x-ray film, squeeze the shutter release, and firmly press the instrument flat against the surface. Source count times for in situ analysis usually range from 3 to 5 minutes, varying among instruments and depending on requirement detection limits.

After the in situ field screening is performed, inspect the nose of the instrument for contamination, which may affect future analysis. If necessary, clean it with a soft cloth or tissue.

Ex Situ Sample Preparation

For ex situ analysis:

There are several possible correct methods for the ex situ analysis of samples. The area that previously would have been homogenized for the in situ analysis should be scooped out and placed into a clean (or decontaminated) stainless-steel or disposable pan (do not use

plastic if organic analysis will be performed on any of this homogenized sample) using a stainless-steel or disposable spoon or spatula (do not use plastic if organic analysis are associated with the homogenized sample). The sample should then be thoroughly mixed (homogenized) using the same spoon or spatula.

1. The preferred method is to setup the portable field stand in an area where the XRF can be stationed and left in place for the day. Use the Niton software and a laptop computer to setup the method criteria and control the XRF instrument during the soil analysis.

    a. Starting with the previously homogenized sample, use the supplied soil sieves, bowl, and mortar to generate a finely ground well homogenized sample. (Note: This step is not required if the soil sample was passed through a sieve during the homogenization step.)

    b. Transfer the prepared sample into a new sample cup (order replacement supplies from Niton), place the X-ray film over the cup, and snap the lid in place. Place the sample cup in the portable field test stand. The XRF points upward, the sample rests on top of the XRF with the X-ray film directly in contact with the nose of the XRF cup lid facing down.

    c. Using the computer, start the analysis. The source count time should be at least 2 minutes for chromium. Consult previous analysis to determine if multiple scan frequencies are required (or contact the project chemist).

    d. Prepare the next sample while the XRF is analyzing the current sample.

2. An alternative method to using the portable field stand is to identify the sample for XRF analysis and homogenize the sample (as described above).

    a. Transfer the sample to a re-sealable plastic bag and firmly molded into a flat smooth surface.

    b. Use the Niton software and a laptop computer or the included PDA to setup the method criteria.

    c. To start the analysis, position the nose of the XRF against the flat smooth surface of the sample and squeeze the shutter release (or press the start button on the laptop or PDA). Be sure to maintain constant pressure against the sample. If contact is broken, the analysis will need to be restarted. The source count time for ex situ analysis usually range from one to two minutes, depending on the required detection limits (see 1c above for count times).

    d. After the ex situ field screening is performed, inspect the nose of the instrument for contamination, which may affect future analysis. If necessary, clean it with a soft cloth or tissue.

3. Transfer the sample to a labeled glass jar for shipment to the confirmation laboratory (if applicable).

Sample Analysis

In today's modern XRF models:

1. An X-ray source is used for detection. Expose the sample to the X-ray source for a minimum of 1 minute. Longer exposure times may be needed depending on the media that is being analyzed and the required detection levels. The time needed for analysis will be determined in the field by analyzing standards that have concentrations of the metals of concern near the required detection levels. Better detection limits can usually be obtained by homogenizing the sample, increasing the exposure time, and using two or more scan frequencies. Use a minimum of a 2-minute exposure for chromium analysis.
2. When the XRF instrument displays the results they include the analyte, the result, and a percent confidence (displayed as a ± value). The result is displayed as nondetect for analytes that do not meet the percent confidence established in the instrument. The lower the required detection levels, the longer the analysis time required to meet the percent confidence.
3. Download saved data from XRF instrument daily (if data are collected in PDA). Foreword the data files to the project chemist daily.
4. All samples collected for offsite confirmation will also be analyzed using the XRF and will be treated as ex situ samples.

Using older models:

1. Expose the sample to the energy source for a minimum of 1 minute. Longer exposure times may be needed depending on the media that is being analyzed as well as the age of the detector (non X-ray detectors). The time needed for analysis will be determined in the field by analyzing standards that have concentrations of the metals of concern near the required detection levels. Better detection limits can usually be obtained by homogenizing the sample, increasing the exposure time. Use a minimum of a 2-minute exposure for chromium).
2. When the XRF instrument indicates the results for the suite of analyzed elements and their concentrations, it includes a standard deviation for the reported concentrations. An analyte concentration is considered **not detected** if the result value is **less than two times the standard deviation**. The lower the required detection levels, the longer the analysis time required to reduce the result's standard deviation.
3. Record the readings (electronically or documented on the sampling log). Review the standard deviations for the elements of interest and determine if a longer analysis time is needed to reduce the standard deviations, thereby allowing the desired accuracy and precision for the concentrations. The standards will be analyzed using increasingly longer times until the required detection level is achieved.
4. Record values in field notebooks.
5. Download saved data from XRF instrument daily.
6. Samples collected for offsite confirmation will also be analyzed using the XRF and will be treated as ex situ samples.

Calibration

Two forms of calibration are important with XRF testing: an energy calibration and a sample matrix calibration.

Energy Calibration

The Niton XLi 702 automatically re-calibrates the energy scale when powered on. The energy scale can also be re-calibrated by pressing "Reset" on the instrument. The energy calibration should be performed every two hours.

Sample Matrix Calibration

Modern XRF instruments, such as the Niton Xli 702, do not require site specific calibrations to account for sample matrix effects. United States Environmental Protection Agency Method 6200 allows both fundamental parameters and Compton normalization as two techniques to eliminate site specific calibrations. Niton uses the Compton normalization method to automatically correct for sample specific matrix effects. The XRF is calibrated internally at the factory on NIST standard reference soil samples. Ensure the annual factory calibration certification is on file. This internal calibration is used for subsequent field work, without need for adjustment or recalibration at other sites.

Quality Assurance and Quality Control (Functional Checks)

Even though no onsite calibration will be performed, the method does require QA/QC functional check-testing protocols. The QA/QC that will be used to document that the XRF is operating properly will have the following steps:

- A startup operations check
- Analysis of a blank sample (clean sand)
- Analysis of standard sample(s)
- Analysis of duplicate samples
- QA/QC procedures will be compliant with manufacturer's instructions.

1. At the beginning of each day perform QA/QC functional check procedure or when the instrument is turned on after more than 2 hours of down time or if the operating environment changes, such as a temperature change of more than 20 degrees Fahrenheit.

2. Two types of blanks should be analyzed, an instrument blank and a method blank. An instrument blank sample (silicon dioxide, provided by Niton) will be analyzed at the start and end of each day and once every 20 samples, to confirm proper zero calibration of the XRF. The blank will be analyzed following the procedure for the ex situ sample analysis. A method blank is used to monitor for any field induced contamination. The method blank should follow any preparation procedures performed on the samples, such as mixing or ex situ analysis. **A method blank will be analyzed each day**.

3. A set of three to ten QC samples will be collected from the site during the initial field activities. These samples will be well homogenized, and a portion sent to the offsite laboratory for characterization. The remaining sample will be collected in re-sealable bags, labeled, and stored with the XRF for use as standards. Three to five of the on-site standards will be analyzed at the start of each day. The results of the standards will be plotted against the original XRF results and a correlation value will be calculated. A

correlation coefficient of 0.90 or greater must be achieved to meet the project objectives. A running log of all onsite standards analyzed will be maintained. One of the standards will be analyzed after every 20 samples. The readout from the XRF **must be within 20 percent relative percent difference of the known QC sample concentration**.

4. The last QA/QC step will be to analyze duplicate samples (two separate aliquots) at a rate of 1 in 10. These duplicate measurements must be within 35 percent of each other for the analysis to continue. If the sample results are not in agreement, then the reason for this discrepancy must be determined.

5. The Niton XL3t 600 displays both concentration and precision for each sample analyte measurement. The precision displayed by the Niton's 95 percent (2-sigma level) confidence intervals; whereas the precision calculated in EPA method 6200 is at a 68 percent (1-sigma) level. The Niton also calculates and displays detection limits for analytes if the concentration is below three standard deviations. This bypasses the need for replicate measurements on low-level standards.

Note: Volatile organic compounds, semivolatile organic compounds, and other organic samples cannot be collected from the homogenized soil if plastic is used for homogenizing or after XRF analysis, if contacted by plastic.

SOP-B17

Standard Operating Procedure for the Installation of Permanent Soil Gas Sampling Implants

This procedure is recommended as a practical approach for installation of permanent soil gas implants using a hand auger or hydrovac where the intent is to collect shallow soil vapor samples, and continuing with hydrovac and/or hollow-stem auger to collect deeper soil vapor samples. This SOP should be used where its application is consistent with the project's data quality objectives and in conjunction with SOP B18 *Standard Operating Procedure for the Collection of Soil Gas Samples from Soil Gas Probes Using Summa™ Canisters.* Only persons trained in the collection of soil gas samples should attempt this procedure.

1. Implant/Probe System Set-up

1.1 Obtain all necessary equipment for hand auguring or hydrovac to 5 feet below ground surface (BGS), and for hydrovac or hollow stem augering to depth greater than 5 feet BGS.

1.2 This technique can only be used in the vadose zone, not below the water table.

1.3 Several screen lengths are available (3", 6", 14", 21") but for discrete intervals required in Vapor Intrusion investigations, a 6" screen is recommended.

1.4 It is necessary to coordinate the hardware (i.e. size of tubing, fittings, sampling interface assembly, etc.) that mates the soil gas probe sampling line to the sampling system (i.e. Tedlar bags, Summa canisters, etc.). This step is critical to achieve a leak free system. All connections should be inert gas tight compression fittings (i.e. Swagelok® or equal) and all sample transfer lines should be made of Teflon® tubing.

1.5 Prior to installation of implants at a given location a utility survey must be completed, the necessary permits acquired, and in the case of private property - permission granted.

1.6 The drilling system must be decontaminated prior to use. Steam cleaning is the preferred method of decontamination. Once decontaminated, the auger/drill rod must be shown to be free of contaminates. As a minimum, a suitably sensitive organic vapor meter should be used for this purpose. Any probe that does not pass decontamination should not be used.

1.7 Handle and store decontaminated hand augers and drill rods in a manner that prevents contamination.

2. Implant Installation

2.1 Assemble the hand auger and/or other coring device. Auger/hydrovac/drill to the desired depth. Be sure that the final depth of the hole includes extra depth to include length of the screen. (i.e. for 5' BGS with a 6" screen, push the probe to 5'6", for 15' BGS with a 6" screen, push the probe to 15'6").

2.2 Attach the ¼" Teflon tubing to the implant. Use sufficient tubing so that at least 2' will be left above ground. Plug the exposed end of the tubing with a cap.

2.3 Remove the auger/drill rod and put a section of PVC pipe down the hole. The PVC pipe is helpful to help center the implant in the middle of the hole and to be sure that the filter

pack material makes it to the bottom of the hole. Thread the implant and tubing down the inside of the PVC pipe until it reaches the bottom.

2.4 Determine the volume of glass beads or sand (#2/12 or #2/16) needed to fill the space around the implant plus an additional 6″ space above the implant. Pour the sand/beads into the hole as the PVC pipe is slowly removed. Do not pull on the tubing. Remove the PVC pipe from the hole completely once the filter pack material has been set in place.

2.5 Determine the volume of dry bentonite needed to fill the next 1 foot of hole. Pour dry bentonite into the hole until it measures 1 foot above the sand pack.

2.6 Determine the volume of hydrated bentonite needed to fill the hole to 6″ below the upper nested probe. Place hydrated bentonite to the point 6″ below the upper nested probe. Measure the depth to make sure the upper probe will be installed at 5′6″ BGS.

2.7 Follow steps 2.2 through 2.4 for the installation of the upper nested probe.

2.8 Determine the volume of dry bentonite needed to fill the next 1 foot of hole. Pour dry bentonite into the hole until it measures 1 foot above the upper sand pack.

2.9 Determine the amount of hydrated bentonite needed to complete the hole. Pour in granular bentonite and hydrate. Repeat the procedure in 6″ increments to ground level.

2.10 Optional: Enlarge the hole and install the flushmount so that it is flush with the ground surface. Label probe tubing with location and depth. Coil the extra tubing inside the enclosure and cover.

2.11 Wait at least 48 hours before sampling.

2.12 When calculating dead volume, use the internal volume of the Teflon tubing, the internal volume of the implant, and the volume of the glass bead pack (assume 30% porosity).

2.13 The ground surface shall be replaced and repaired to original condition.

SOP-B18

Collection of Soil Gas Samples from Temporary and Permanent Soil Gas Probes using SUMMA Canisters and a Helium Leak Check

---

1. Scope and Application

This procedure offers a practical approach for the collection of soil gas samples from soil gas probes from permanently installed vapor points into SUMMA canisters. Soil gas sample integrity is verified by using a real time helium leak checking procedure before taking each sample. This must be done after probe installation and before sampling as well as before each subsequent sample for permanent probes. This standard operating procedure (SOP) should be used in conjunction with CH2M HILL's SOPs: "Soil Gas Probe Installation SOP" or "Soil Gas Implant Installation SOP," and when its application is consistent with the project's data quality objectives. Only persons trained in the collection of soil gas samples should attempt this procedure.

2. Site-Specific Considerations

2.1. Prior to attempting soil gas sampling there should be an understanding of subsurface conditions at the site.

2.1.1. Depth to Groundwater – soil gas samples should be collected in the vadose zone (and above the capillary fringe). Generally, soil gas samples should not be collected at a depth above 5 feet below ground surface (bgs). Sampling at multiple depths should be considered.

2.1.2. Soil permeability **-** It may not be feasible to collect soil gas from tighter grain soils with little pore volume, such as clays; if there are clay layers present in the subsurface, these intervals should be avoided. For sampling in these soils, it is recommended to uses soil gas implants with a wider bore hole. Care should be taken during purging and sampling so that the vacuum in the sampling system never exceeds 7 "Hg (100 "water).

3. Other Considerations

3.1. A utility clearance should be performed prior to mobilization, as with all intrusive site work.

3.2. Soil gas sampling should not be performed until 48 hours after a significant rain event (>1 inch of rainfall).

4. Apparatus and Materials

4.1. The soil gas probes should be installed by a licensed driller.

4.2. Teflon tubing, ¼-inch outer diameter sample tubing.

4.3. Swagelok® ¼-inch nut and ferrule sets for connecting the probe tubing to the sampling manifold.

4.4. The helium leak check equipment, including the enclosure, helium cylinder (high purity helium), and helium detector (Dialectric MGD is preferred). The enclosure may be provided by the driller or can be constructed from polyvinyl chloride (PVC) pipe. The helium detector can be rented from an equipment rental company.

4.5. MultiRae five gas meter. (Optional if onsite atmospheric gas analysis is required)

4.6. Air pump for purging and electric supply for the pump (either generator or power inverter with adapter for car battery). Must be capable of a flow of 200 mls/min and a vacuum of 20 "Hg.

4.7. Sampling manifold consisting of Swagelok® gas tight fittings with three valves and one pressure gauge to attach the probe to the air pump and the sample canister. This manifold must be clean, free of oils, and flushed free of volatile organic compounds (VOCs) prior to use.

4.8. Canister, SUMMA polished, certified clean and evacuated. (Canisters are typically provided by the laboratory.)

4.9. Flow controller or critical orifice, certified clean and set at desired sampling rate. These are typically provided and set by the laboratory.

4.10. Negative pressure gauge, oil-free and clean, to check canister pressure. The pressure gauges are typically provided by the laboratory. The laboratory may either provide one pressure gauge to be used with all of the canisters, or a pressure gauge for each canister to be left on during sample collection. Sometimes the canisters are fitted with built-in pressure gauges that are not removable.

4.11. Shipping container, suitable for protection of canister during shipping. Typically, strong cardboard boxes are used for canister shipment. The canisters should be shipped back to the laboratory in the same shipping container in which they were received.

4.12. Wrenches and screw driver (clean and free of contaminants), various sizes as needed for connecting fittings and making adjustment to the flow controller A 9/16-inch wrench fits the ¼-inch Swagelok® fittings, which most canisters and flow controllers have.

5. System Set-up

5.1. Acquire all the necessary hardware and sampling equipment shown in Figure 1. Be sure to use ¼-inch outside diameter Teflon sample tubing. ***Do not connect the canister at this time***.

5.2. Assemble or obtain the necessary fittings and vacuum gauge to create a soil gas probe and sampling manifold as shown in Figure 1. This manifold must be clean, free of oils, and flushed free of VOCs prior to use. Note: use only gas tight fittings such as Swagelok® or equivalent. Be sure to place the helium leak check enclosure over the probe, and push the sample tubing through the hole in the cap before attaching the sampling manifold.

5.3. Adjust the purge system evacuation pump sampling rate to achieve the desired flow rate of 200 milliliters/min. This should be performed at the outlet of the vacuum pump prior to purging, either by using a suitable flow meter, or determining the amount of time required to fill a 1- liter Tedlar bag.

5.4. Summa canisters are pre-evacuated by the laboratory. The vacuum will need to be verified in the field prior to use with a pressure gauge.

5.5. Flow controllers (if used) should come pre-set by the laboratory to sample at a pre-determined rate based on specific project requirements (see Table 1 for the most common options). In some cases [that is, project-specific quality assurance (QA)], the flow rate will need to be verified in the field prior to use. This is accomplished with a bubble meter, vacuum source, and instructions supplied by the laboratory.

6. System Leak Checking and Purging

6.1. ***Physical Leak Check*** - Perform a leak check of the sample manifold system by:

6.1.1. Make sure the gas probe valve (valve #1) is closed and the sample valve (valve #2) is open.

6.1.2. Open the purge valve (valve #3) and start the purge pump. Verify that the flow is set to 200 milliliters per minute (ml/min).

6.1.3. Close the sample valve (valve #2) and achieve a vacuum gauge reading of approx. 15 inches of mercury ("Hg).

6.1.4. A leak-free system will be evident by closing off the purge valve (valve #3), turning off the purge pump, and observing no loss of vacuum within the sampling manifold system for a period of 30 seconds. Repair any leaks prior to use.

6.1.5. Record the leak check date and time on the field sampling log.

6.2. ***System Purge and Helium Leak Check*** -A purge of the soil gas probe and sampling manifold system is required before taking each sample. The helium leak check procedure is also performed during this step. This leak check will verify the integrity of the implant as well as the probe and ground interface. This is accomplished by:

6.2.1. Where the ground surface is soft, the helium leak check enclosure is pressed down slightly into the ground surface. In situations where the ground surface is hard (for example, asphalt), apply a slight downward pressure to achieve a buildup of helium in the leak check enclosure.

6.2.2. Start the flow of helium under the leak check enclosure at 200 ml/min. Try and position the tube so the helium is directed at the interface of the probe and the ground. Let the helium fill the enclosure for a couple of minutes.

6.2.3. Turn the helium leak detector on and make sure that the detector is not reading any helium before proceeding. Verify that the helium concentration inside the leak check enclosure is >10% by placing the probe of the helium detector into the hole where the sample tubing comes out or under the enclosure wall. It is not necessary to verify that the helium concentration is 100% as this is bad for the detector. Safety factors will be incorporated into measured purge gas helium concentration to verify the probe seal integrity.

6.2.4. Purging is carried out by pulling soil gas through the system at a rate of 200 ml /min for a time period sufficient to achieve a purge volume that equals at 3 dead volumes (internal volume of the in-ground annular space, sample line, and sampling manifold system). When calculating the dead volume, be sure to take into account the inside diameter and length of the Teflon sample tubing, as well as the probe outside diameter and retract distance for the annular space for temporary probes. For permanent probes, calculate the volume of the annular space using a nominal 30% porosity for the sand or glass bead pack. If during the purge (or sampling) the vacuum exceeds 7 "Hg, then reduce the pump flow rate. The system vacuum must stay below this level at all times.

6.2.5. Open the sample valve (valve #2) and the purge valve (valve #3) and start the purge pump. Verify that the flow rate is still 200 ml/min.

6.2.6. To start the soil gas probe purge, open the gas probe valve (valve #1) and close the sample valve (valve #2) at the same time, and start timing.

6.2.7. During the last 5 minutes of the purge (or the entire purge time if less than 5 minutes), attach a Tedlar bag to the purge pump exhaust on open the bag's valve.

6.2.8. If the vacuum gauge reads >7 "Hg during the purge, then close the purge valve (valve #3) and monitor the vacuum in the manifold and probe. If there is no significant change after a minute, then there is an insignificant amount of soil gas and the vacuum is too great to take

a soil gas sample. Several things can cause this. Consult with the project manager and take corrective action.

6.2.8.1. The soil formation is too 'tight' (that is, high clay or moisture content). Try using a lower flow rate. (temporary or permanent probe)

6.2.8.2. The soil formation is too 'tight'. Try a different depth or location. (temporary probe)

6.2.8.3. With a temporary probe system, the expendable tip may not have released when the probe was retracted. Try retracting the probe a little further, or use a long thin rod to poke the tip loose.

6.2.8.4. If water is visible in the flexible soil gas tubing, stop the purging immediately. It is not possible to take a soil gas sample at that depth or location.

6.2.9. At the end of the pre-determined purge time and after the system is verified to be leak free, close the purge valve (valve #3), close the valve to the Tedlar bag, and turn off the pump. Do not open the purge valve again. Doing so will result in loss of the purge integrity and will require re-purging.

6.2.10. Attach the Tedlar bag to the helium detector using a piece of flexible rubber tubing and open the valve. If a helium reading of >0.1%, or 1000 ppmv, is observed, then the probe leak check has failed and corrective action should be taken. This includes first checking the fittings and connections and trying another purge and leak check. It may also be necessary to remove the soil gas probe and re-install it in a nearby location. Using a limit of 0.1 % allows for a 10x safety margin to verify that the leak check was <1% (verify that this limit is consistent with appropriate project-specific agency guidance).

6.2.11. Remove Tedlar bag and turn off the helium leak detector.

6.2.12. Record the purge date, time, purge rate, leak check result, and purge volume on the field sampling log.

6.2.13. Immediately move on to the sampling phase. Little to no delay should occur between purging and sampling.

7. Sample Collection

7.1. 'Clean' sampling protocols must be followed when handling and collecting samples. This requires care in the shipping, storage, and use of sampling equipment. Cleanliness of personnel who come in contact with the sampling equipment is also important: no smoking, no eating, no drinking, no perfumes, no deodorants, no dry cleaned clothing, etc. Canisters should not be transported in vehicles with gas-powered equipment or gasoline cans. Sharpie markers should not be used for labeling or note-taking during sampling.

7.2. The SUMMA canisters are certified clean and evacuated by the laboratory to near absolute zero pressure. Care should be used at all times to prevent inadvertent loss of canister vacuum. ***Never open the canister's valve unless the intent is to collect a sample or check the canister pressure.***

7.3. Verify that the vacuum pressure of the canister is between 28 – 30 inches Hg. Do not use a canister that has an initial pressure less than 28 inches Hg because that canister likely leaked during shipment.

7.3.1. Remove the protective cap from the valve on the canister.

7.3.2. If using an external gauge, attach the gauge to the canister and open the valve. If the pressure gauge has two openings, make sure that the other opening is closed; the canister cap can be used for this. After taking the reading, close the canister and remove the gauge.

7.3.3. If using assigned pressure gauges, attach the pressure gauge to the canister, then attach the flow controller. When sample collection begins, record the initial pressure.

7.4. Attach the canister to the flow controller and then connect the flow controller to the sample valve (valve #2) on the sampling manifold. Open the sample valve (valve #2)

7.5. Before taking the sample, confirm that the sampling system valves are set as follows: 1) the purge valve (valve #3) is confirmed to be closed, gas probe valve (valve #1) is open, and 2) the sample valve is (valve #2) is open.

7.6. Slowly open the canister's valve approximately one full turn.

7.7. After sampling for the appropriate amount of time (determined from project instructions, see Table 1), close the sample valve (valve #2) and the canister's valve. If the canister has a built-in or assigned pressure gauge, allow the canister to fill until the vacuum pressure reaches 0 – 10 inches Hg. Remove the canister from the sampling manifold.

7.8. If using an external vacuum gauge, re-attach it, open the canister valve, and record the final pressure. Close the valve, remove the gauge, and replace and tighten the cap on the canister. Ideal pressure in the canister is between 0-10 inches Hg. More than 10 inches Hg can greatly increase reporting limits. Consult with the project team if this condition is encountered.

7.9. Record the sampling date, time, canister identification (ID), flow controller ID, and any other observation pertinent to the sampling event on the field sampling log. The temperature and barometric pressure should be recorded.

7.10. Fill out all appropriate documentation (sampling forms, sample labels, chain of custody, sample tags, etc.).

7.11. Disassemble the sampling system.

8. Sample Handling and Shipping

8.1. Fill out all appropriate documentation (chain of custody, sample tags) and return canisters and equipment to the laboratory

8.2. The canisters should be shipped back to the laboratory in the same shipping container in which they were received. The samples do not need to be cooled during shipment. DO NOT put ice in the shipping container.

8.3. When packing the canisters for shipment, verify that the valve (just past finger tight) and valve caps are snug (1/4 turn past finger tight), and use sufficient clean packing to prevent the valves from rubbing against any hard surfaces. Never pack the cans with other objects or materials that could cause them to be punctured or damaged.

8.4. Do not place sticky labels or tape on any surface of the canister!

8.5. Place a custody seal over the openings to the shipping container.

8.6. Make sure to insure the package for the value of the sample containers and flow controllers.

8.7. Ship canisters for overnight delivery.

9. Quality Control

9.1. Canister supplied by the laboratory must follow the performance criteria and quality assurance prescribed in U.S. Environmental Protection Agency (EPA) Method TO-14/15 for canister cleaning, certification of cleanliness, and leak checking. SOPs are required.

9.2. Flow controllers supplied by the laboratory must follow the performance criteria and QA prescribed in EPA Method TO-14/15 for flow controller cleaning and adjustment. SOPs are required.

Table 1 – Common Sampling Rates for Soil Gas Sampling

Can Size	Length of sampling time	Sampling Flow Rate (ml/min)
6 Liter	1 hour	90
6 Liter	8 hours	11.25
6 Liter	24 hours	3.75
1 Liter	5 minutes	180
1 Liter	1 hour	15
850 ml	5 minutes	150
850 ml	1 hour	12

Figure 1

Soil Gas Sampling System

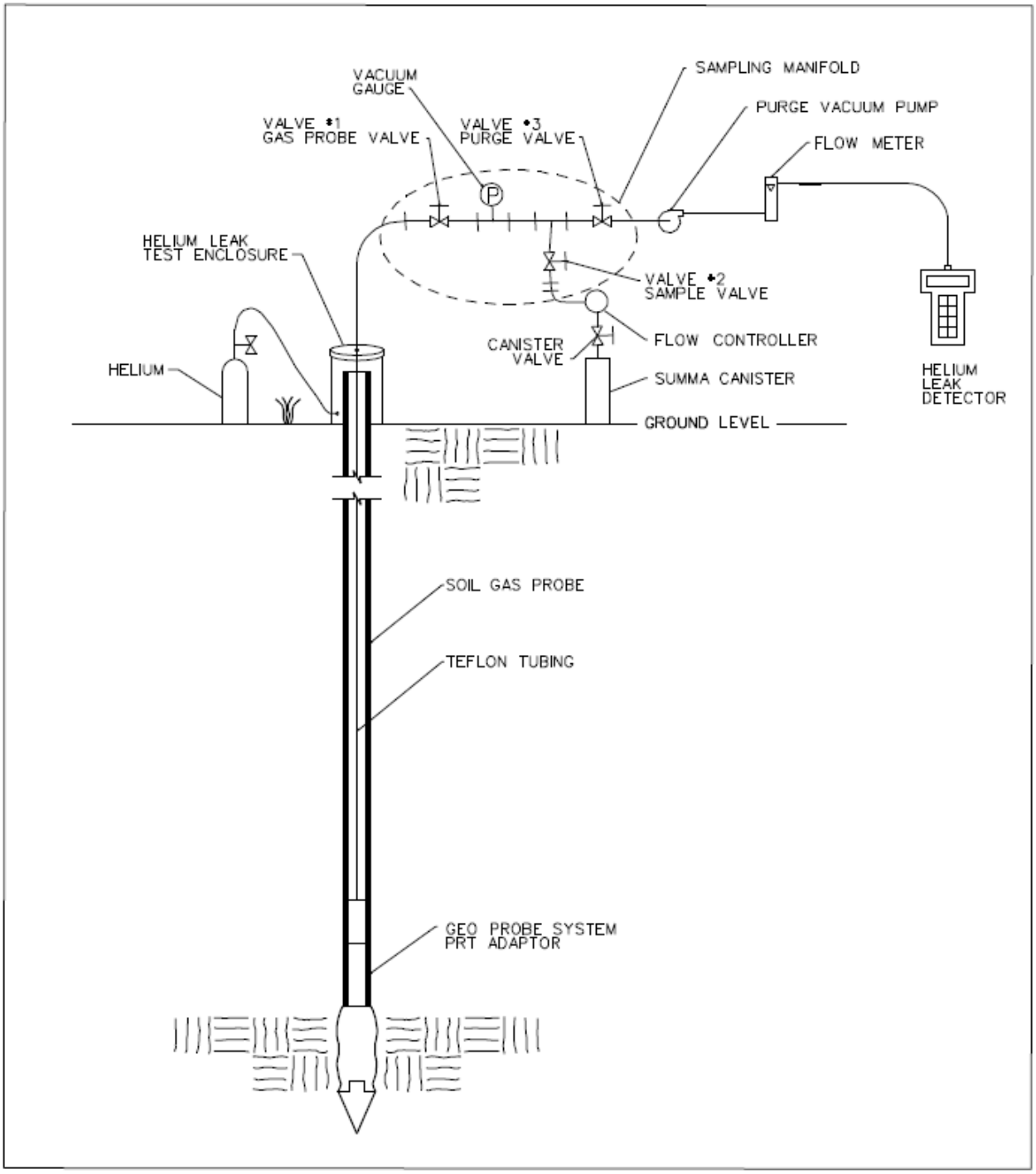

CH2MHILL *Applied Sciences Laboratory*

Indoor Vapor Intrusion Assessment
Soil Gas Sampling Field Log

Project Info

Project Name: _____ **Project # :** _____

By: _____ **Date:** _____

Structure

Identification: _____

Address: _____

Sample Location type:

☐ concrete slab on grade ☐ Yard or Driveway

☐ concrete footing w/crawl space ☐ other (describe) _____

☐ basement _____

Soil Gas Sampling System

Probe type (describe): _____

_____

Probe to sample interface system (describe): _____

_____

Sample collection type: ☐ Syringe ☐ Tedlar bag ☐ Summa canister

Other info (describe other aspects) _____

_____

Soil Gas Probe Purging & Sampling Log

Sample location (show in diagram)	1	2	3	4
Sample Identification (field ID)				
Time Installed				
Depth of installed probe (feet bgs)				
Leak check, vacuum (probe/sampling interface)				
Calculated dead volume (1 purge volume), cc				
Calculated purge volume (3 purge volume), cc				
Purge rate, cc/min.				
Purge duration, min.				
Purge started (time of day)				
Purge vacuum, " Hg				
Max Helium Leak Check Reading				
Purge completed (time of day)				
Sampling period started (time of day)				
Sampling rate, cc/min				
Sampling vacuum, " Hg				
Sampling period ended (time of day)				

Observations and Comments: _____

_____

_____

_____

_____

Appendix B
Revised Management Protocol for Handling and Disposition of Displaced Site Material

Revised Management Protocol for Handling and Disposition of Displaced Site Material, Topock Remediation Project, Needles, California

PREPARED FOR:	Topock Remediation Project Files
PREPARED BY:	Pacific Gas and Electric Company
DATE:	October 3, 2012 (submitted with 90% Design); rev. 1 July 2015 (submitted as part of 90% Responses to Comments); rev. 2 November 2015 (submitted with Final Design)

This document presents the general approach and management protocol required for the handling and disposition of soil and/or rock (referred to as "material" throughout the document) that is displaced as a result of past (as practical), present, and future activities associated with the Pacific Gas and Electric Company (PG&E) Topock Remediation Project, Needles, California. Specifically, this includes material removed from the Earth (i.e., displaced) as a result of drilling, excavation, sampling, testing, construction, grading, and other remedial activities. The management of material that may be disturbed as a result of remedial activities but not displaced from its natural location, such as soil disturbed by foot or vehicle traffic along a pathway, is not within the scope of this protocol. This protocol is applicable to the handling and disposition of displaced materials only. Further, materials that were not part of the natural site condition (e.g., building materials, equipment, waste, debris, or imported fill[1]) are not included in this protocol.

A draft of this protocol (dated October 3, 2012[2]) was included in the Soil Management Plan associated with the Basis of Design Report/Pre-Final (90%) Design Submittal and Construction/Remediation Action Work Plan (September 8, 2014). Subsequent to agency review of the design submittal, this protocol has been revised per comment from the U.S. Department of the Interior (DOI) (Comment #803, DOI-333 [see Attachment 1]). The October 3, 2012 draft of this protocol included a provision for the long-term storage of material that is determined to be non-hazardous waste but unsuitable for a final disposition decision on-site because contaminants are present above the interim screening level. The 90% design submittal identified an area (located on federal land) for the long-term storage of material that is generated during construction of the final groundwater remedy and is characterized to meet this profile; however, the DOI comment indicates that based on discussions with San Bernardino County, the adjacent lessee of Moabi Regional Park, and internal discussions between the U.S. Bureau of Land Management (BLM) and the DOI, PG&E must find an alternate location for storage. Based on further clarifications from DOI and BLM, PG&E understood that storage of waste soil above screening levels would not be allowed anywhere on federal lands within the project area. The remaining potential storage locations are private properties owned by the Fort Mojave Indian Tribe (FMIT) and PG&E. Given the groundwater remedy facilities already planned to be located on the Topock Compressor Station (TCS) and the TCS's operational needs for the property for natural gas compressor operations, there is space on PG&E property only to temporarily store a small number of soil bins at a time while awaiting analysis prior to final disposition. There is no available space on PG&E property to store waste soil on a longer-term basis. The FMIT did not identify any locations on the Tribe's property within the project area for this purpose. PG&E also contacted treatment storage and disposal facilities (TSDFs) and was told that the TSDFs would accept the waste soil for disposal, but not storage.

[1] For the purpose of this protocol, imported fill is defined as unconsolidated mixtures of sand, silt, and gravel (engineered gradations, or otherwise) that were not originally derived from inside the defined project boundary. Specific examples of imported fill material may include road base material, shading material used in pipeline trenches, or crushed rock used for railroad ballast.

[2] Responses to comments on the May 14, 2012 draft of this protocol (see Attachment 1) were incorporated in the October 2, 2012 draft of the protocol.

Given the above, PG&E determined that there was no available alternate location for the long-term storage of material with concentrations above the interim screening levels. Therefore, this protocol has been revised to exclude this provision.

1.0 Introduction

PG&E carefully plans Topock Remediation Project activities to minimize both the disturbance and displacement of site material. The land and soils are to be handled and managed with care and respect. Therefore, the protocol established in this plan is intended to minimize the amount of displaced material that leaves the site and instead, provide for eventual return, reuse, or restoration of the material onto the lands from which it was displaced. Through the application of this protocol and its incorporation into future work plans involving material displacement, it is anticipated that the goal of careful and respectful handling of soil material will be fulfilled.

In addition to addressing Tribal requests, this protocol was developed to comply with Mitigation Measure CUL-1a-8 as set forth in the certified Environmental Impact Report (EIR) and Mitigation Monitoring and Reporting Plan (MMRP) adopted by the California Department of Toxic Substances Control (DTSC). This measure requires PG&E to develop a Cultural Impact Mitigation Program (CIMP) as part of the final design of the approved groundwater remedy, and specifically subparagraph (g) requires the CIMP to include protocols for handling soil cuttings[3]. DTSC adopted this measure following its determination that the project area is a significant historical resource for California Environmental Quality Act (CEQA) purposes (Final EIR, p. 4.4-57). Similarly, as part of the consultation process for the Programmatic Agreement (PA) under Section 106 of the National Historic Preservation Act (NHPA), BLM determined that a traditional cultural property (TCP) eligible for inclusion on the National Register of Historic Places exists within the Area of Potential Effect (APE). Throughout this document, the term “site” refers to the project area.

2.0 Statement from Fort Mojave Indian Tribe

The following statement was made by the Fort Mojave Indian Tribe regarding the site background and cultural significance:

> *The Topock site and adjacent lands are part of a larger geographical area referred to as a Traditional Cultural Landscape (TCL). The TCL is the ancestral home of the Fort Mojave Indian Tribe and other Native American Tribes including the Hualapai Nation, Colorado River Indian Tribes, Quechan Nation, Cocopah Tribe, and Yavapai-Prescott Nation. This entire TCL is of tribal religious significance. In some areas and at certain times, tribal members carry out various cultural activities and religious ceremonies.*
>
> *The very nature of the remedial activities being performed at the Topock Compressor Station involve disturbance to the TCL. Such activities as drilling, soil sampling, excavation, construction, monitoring, testing, vehicle movement, foot traffic, geophysical and other surveys, emplacement of markers, and discharge of water, solids, and other material disturb the sanctity of the land that is held in the hearts of Native Americans.*
>
> *In particular, the removal and disturbance of soils, both surficially and from the subsurface, is of concern to the Tribes because such actions are regarded as profound disruptions of the sacred landscape. While the nature and significance of this concern is not easily understood by non-Native Americans, perhaps the following excerpt, attributed to the Duwamish Chief Sealth, begins to aid in the understanding:*
>
> > *Every part of this country is sacred to my people. Every hillside, every valley, every plain and grove has been hallowed by some fond memory or some sad experience of my tribe. Even the*

[3] Mitigation Measure CUL-1a-8(g) states the following: Protocols for the repatriation of clean soil cuttings generated during construction activities and during drilling associated with repair/replacement activities during operations and maintenance phases. The soil cuttings shall be managed in compliance with applicable laws and regulations on site.

rocks that seem to lie dumb as they swelter in the sun along the silent seashore in solemn grandeur thrill with memories of past events connected with the fate of my people, and the very dust under your feet responds more lovingly to our footsteps than to yours, because it is the ashes of our ancestors, and our bare feet are conscious of the sympathetic touch, for the soil is rich with the life of our kindred. (Chief Sealth, 1854)

The Pacific Gas & Electric Company (PG&E), in its implementation of the remedial actions required by the United States Department of the Interior (DOI) and the California Department of Toxic Substances Control (DTSC) must commit to performing these actions in a manner that is respectful of Native American values.

3.0 General Protocol for Management of Displaced Material (Mitigation Measure: CUL-1a-8[g])

This section presents each element of the protocol for the management of displaced material, including work planning, handling and short-term storage, contamination assessment, and final disposition. A graphical presentation of key elements of this process, and associated decision points, is presented on Figure 1 at the end of this document.

3.1 Work Planning

PG&E is required to prepare a work plan whenever a field activity is performed at the Topock site in support of a regulatory requirement or action. Through the established federal regulatory review process, these work plans are made available for review by process stakeholders and by the governments of affected Native American Indian Tribes (referred to as "Tribes" throughout this document) via the consultation process set forth in the PA's Consultation Protocol, consistent with Section 106 of the NHPA. In addition to the information describing the scope of work, field logistics and other implementation details, work plans that involve activities that displace site material also describe the process for the management and disposition of the materials. Work plans finalized subsequent to the development of this protocol will include specific description of the process for involving the input of Tribe(s) regarding the management of the material that will be displaced as a result of the work. Key procedural information to be included in the work plan will include, but not be limited to, the following:

- Summary of measures planned to minimize the amount of disturbance that will be incurred.
- Notification procedures to inform the Tribe(s), involved regulatory agencies, and affected land owner(s) regarding the proposed activities that will disturb/displace soil or other materials.
- The location of proposed disturbance activities (e.g. access pathways) and displacement activities (e.g. drilling or sampling locations), including maps.
- Estimation of the volume and type(s) of material that will be displaced.
- The location and methodology for short-term storage of displaced material (see Section 3.2).
- Methods that will be used to assess whether contaminants are present (see Section 3.3).
- Methods that will be used to minimize the volume of material that may be displaced during work including specific measures, such as field screening and material segregation strategies, to try and minimize the volume of material that requires disposal. .
- The anticipated location and methodology for final on- or off-site disposition (see Section 3.5).

3.2 Handling and Short-term Storage

Material that is displaced as a result of Topock Remediation Project activities including drilling, excavation, sample collection, testing, construction, grading, or other activities will be handled on-site in accordance with the project-specific work plan. Displaced material that must be characterized for key chemical properties prior to identifying

the appropriate final disposition method will be stored for the short term. Short-term storage areas and the protocol for handing material in these areas may vary by project. Depending on the type and volume of material displaced, location, land owner considerations, and other pertinent factors, short-term storage methods may include storage devices (e.g. bins) or properly maintained stockpiles that prevent this material from commingling with other areas of the environment. In some cases, short-term storage for characterization may not be necessary. For example, displaced material that is pre-characterized or characterized rapidly as work is conducted will be managed directly for final disposition (see Section 3.4).

Specific material handling and short-term storage details will be defined in the approved work plan for a given activity. Key details to be identified in the work plan include:

- The mode and location of short-term storage.
- The method of transfer from the point of origin to short-term staging area.
- Best management practices/regulatory requirements to prevent releases of the potentially contaminated material during transfer and storage.
- Best management practices to protect the material from weather, erosion, contamination, and vandalism while located in the short-term staging area(s).
- Method for segregation of soils based by location, as practicable and appropriate.

A key element of this handling protocol is the development of an inventory of all material displaced by Topock Remediation Project activities. Key information maintained in this inventory will include:

- Material displacement authorization – Specific work plan under which the work was conducted.
- Material origin – Specific location of the site.
- Material description (e.g., soil, rock, etc.).
- Date(s) of displacement or accumulation.
- Generating activity (e.g., drilling, excavation, etc.).
- Approximate volume of material stored.
- Short-term storage mode and location – Type of storage (including container identification number, as applicable) and location of short-term storage pending material characterization. In some cases, this information may need to be updated as containers are moved between areas of the site.
- Characterization status – Characterization sample information (e.g., date of submittal and laboratory used), date of receipt of results, and the contamination assessment based on comparison to screening criteria (see Section 3.3).
- Final disposition information – Indication of the on-site or off-site final disposition action identified through discussion with Tribe(s), agencies, and the affected land owner(s), as appropriate, based on review of material type and the contamination assessment (see Section 3.4).

Once the displaced material has been managed through final disposition, it will no longer be tracked in the displaced material inventory.

3.3 Contamination Assessment

Key chemical property information will be used to determine the final disposition method, and specifically, whether displaced material is suitable for retention on-site for eventual return, reuse, or replacement, or if the material must be removed from the site for disposal in accordance with applicable State and Federal laws and

regulations. Key information that will be considered to assess whether the material is contaminated, and therefore, whether the material can remain on-site or not, includes:

- Existing information including knowledge of the history of an area, or laboratory analytical results collected during previous phases of work. Use of existing information may preclude the need for additional analytical testing. When available, this information will be included in the work plan.
- Results of characterization samples collected for laboratory analysis, and observation of the physical properties of the material (e.g., white powder, burned material, boulders, etc.), as defined in the approved work plan for a given activity.
- Screening values for various analytes identified for the purpose of determining the appropriate material disposition method. Tables 1 and 2 at the end of this document present a reference list of analytes and associated screening levels that may be applicable for making decisions related to disposition of displaced site materials. The specific analytes applicable for characterization of displaced material will be determined based on the origin of the material and potential disposition locations. Screening values included on Tables 1 and 2 are defined in the following bullets, which will be modified as screening levels are added to these tables:
  - **Interim Screening Levels (Table 1)** – This is predominantly the background value. However, if the background value is not available then the lesser of the DTSC residential Screening Level (HERO's *Human Health Risk Assessment Note 3 – DTSC-modified Screening Levels*)[4] or the ecological comparison value is used. If a DTSC residential screening level is not available, it is the lesser of the United States Environmental Protection Agency (USEPA) residential regional screening level or the ecological comparison value. This value is the most conservative, and it is assumed that the project-specific cleanup goal and/or Tribal screening level will be equal to or greater than this value.
  - **Hazardous Waste Toxicity Characteristic Levels (Table 2) –** These values are used to determine if the material should be classified as a State or Federal hazardous waste. Specifically, total constituent concentrations expressed in milligrams per kilogram (mg/kg) will be compared to the hazardous waste characteristic levels in Table 2, and will be evaluated as follows:
    1. If the total constituent concentration exceeds the total threshold limit concentration (TTLC), the soil represented by the sample will be classified as a non-RCRA California hazardous waste. Additional evaluation of the soluble threshold limit concentration (STLC), as described in step 3 below, will not be performed.
    2. If the total constituent concentration exceeds the numeric value of the RCRA toxicity characteristic (TC) level by about 20 times or more, the toxicity characteristic leaching procedure (TCLP) will be performed. If the constituent concentration in the TCLP leachate exceeds the TC level, the soil represented by the sample will be classified as a RCRA hazardous waste. Additional evaluation of the STLC, as described in step 3 below, will not be performed.
    3. If the sample has not been classified as hazardous waste in steps 1 or 2, the total constituent concentration will be compared to the STLC. If the total constituent concentration exceeds the numeric value of the STLC by about 10 times or more, the California Waste Extraction Test (WET) will be performed. If the constituent concentration in the WET exceeds the STLC, the soil represented by the sample will be classified as a non-RCRA California hazardous waste.
    4. If the sample has not been classified as a hazardous waste in steps 1, 2, or 3, or by other applicable hazardous waste standards, the soil represented by the sample will not be classified or managed as hazardous waste.

[4] California Department of Toxic Substances Control's Human and Ecological Office (HERO). 2015. *Human Health Risk Note 3–DTSC-Modified Screening Levels*. May 3.

These values will be used to determine the final disposition of displaced material by comparing the representative concentration of a given volume of material to the screening values. The methodology for determining the representative concentration will be established in the project-specific work plan and should not be limited to a concentration-by-concentration comparison, but could include statistical estimates or averages based on multiple samples. Material that has a representative concentration that is equal to or below the interim screening level or project-specific cleanup goal (once established) is suitable for return, reuse, or replacement on-site. Material that has a representative concentration that is greater than the interim screening level or project-specific cleanup goal (once established), or is characterized as hazardous waste will be disposed of off-site in accordance with applicable laws and regulations.

The screening levels included in Tables 1 and 2 must be updated as applicable regulations and project-specific decisions are made. PG&E will review this information as remediation work plans are developed and implemented. As changes are determined appropriate, PG&E will submit revisions to the regulatory agencies and Tribe(s) for review and comment. Only agency approved values will be utilized.

3.4 Final Disposition

Final disposition refers to the final action taken on behalf of the Topock Remediation Project as it relates to the management of material displaced during associated activities. This protocol has been designed with the purpose of minimizing the volume of material that is disposed of off-site. Material determined to have a representative concentration that is equal to or less than the interim screening level or project-specific cleanup goal (once established) will be retained on site for return, reuse, and/or restoration. Material determined to have a representative concentration that is greater than this value will be transported off site for disposal in accordance with applicable laws and regulations or treated on site if appropriate based on the selection of the final soil remedy. Material return, reuse, and/or restoration options associated with final disposition on site are discussed in Section 4.

4.0 Return, Reuse, and/or Restoration of Displaced Material

Final on-site disposition alternatives include the return, reuse, and/or restoration of the displaced material. The preferred disposition alternative(s) will be considered on a case-by-case basis with the regulatory agencies, Tribe(s), and affected land owner(s), as suitable material is identified. Material types may differ by physical or chemical properties, and therefore the preferred on-site disposition alternative may also vary. Alternatives that have been preliminarily identified include, but are not limited to:

- Replacement of material into original borings, trenches, or excavations, from which they were removed.
- Replacement of material into borings, trenches, or excavations other than those from which they were removed.
- Creation of topographical or landscape barriers to protect sensitive areas.
- Creation of berms or other structures (e.g., gabions) to prevent erosion.
- On-site road maintenance (this alternative may require sorting the material for different physical sizes).
- Stockpiling in designated areas.

The above list of final on-site disposition alternatives is preliminary, and should not be considered complete. Further, if material is found to contain concentrations of volatile organic compounds it may not be suitable for return, reuse, and/or restoration near buildings where vapor intrusion would be of concern. Coordination with agencies, Tribe(s), and affected land owners is critical in design of the work plan to identify the preferred on-site disposition alternative(s) and communication milestones, so the material can be efficiently managed.

Material displaced as part of past remediation project activities was managed in accordance with project-specific work plans. As a result, some material has been retained at the site because contaminant concentrations were

below the Interim Screening Level. Therefore, previously displaced material is available for the return, reuse, and/or restoration alternatives included in the bullets above, or as additional uses are developed. As of June 2012, the estimated volume of material that has been retained and stockpiled through past remediation project activities is approximately 30 to 35 cubic yards.

TABLE 1
Reference List of Potentially Applicable Analytes and Associated Screening Levels (rev. July 2015)
Management Protocol for Handling and Disposition of Displaced Material
PG&E Topock Compressor Station, Needles, California

Group	Analyte	Interim Screening Level		Interim Screening Level Source	Hazardous Waste Disposal Criteria
Dioxins and Furans (ng/kg)					
	1,2,3,4,6,7,8-HpCDD	NE		Not Established	NE
	1,2,3,4,6,7,8-HpCDF	NE		Not Established	NE
	1,2,3,4,7,8,9-HpCDF	NE		Not Established	NE
	1,2,3,4,7,8-HxCDD	NE		Not Established	NE
	1,2,3,4,7,8-HxCDF	NE		Not Established	NE
	1,2,3,6,7,8-HxCDD	NE		Not Established	NE
	1,2,3,6,7,8-HxCDF	NE		Not Established	NE
	1,2,3,7,8,9-HxCDD	NE		Not Established	NE
	1,2,3,7,8,9-HxCDF	NE		Not Established	NE
	1,2,3,7,8-PeCDD	4.8		EPA Residential RSL	NE
	1,2,3,7,8-PeCDF	NE		Not Established	NE
	2,3,4,6,7,8-HxCDF	NE		Not Established	NE
	2,3,4,7,8-PeCDF	NE		Not Established	NE
	2,3,7,8-TCDD	4.8		EPA Residential RSL	See Table 2
	2,3,7,8-TCDF	NE		Not Established	NE
	OCDD	NE		Not Established	NE
	OCDF	NE		Not Established	NE
	TEQ Avian	16		Soil Ecological Comparison Value (ECV)	NE
	TEQ Human	50		DTSC HHRA Note 2	NE
	TEQ Mammals	1.6		Soil Ecological Comparison Value (ECV)	NE
Metals (mg/kg)					
	Aluminum	16,400		Background Level	NE
	Antimony	0.285		Soil Ecological Comparison Value (ECV)	See Table 2
	Arsenic	11	*	Background Level	See Table 2
	Barium	410	*	Background Level	See Table 2
	Beryllium	0.672		Background Level	See Table 2
	Cadmium	1.1	*	Background Level	See Table 2
	Calcium	66,500		Background Level	NE
	Chromium, Hexavalent	0.83	*	Background Level	See Table 2
	Chromium, total	39.8	*	Background Level	See Table 2
	Cobalt	12.7	*	Background Level	See Table 2
	Copper	16.8		Background Level	See Table 2
	Cyanide	0.9		Soil Ecological Comparison Value (ECV)	NE
	Iron	55,000		EPA Residential RSL	NE
	Lead	8.39	*	Background Level	See Table 2
	Magnesium	12,100		Background Level	NE
	Manganese	402	*	Background Level	NE
	Mercury	0.0125		Soil Ecological Comparison Value (ECV)	See Table 2
	Molybdenum	1.37	*	Background Level	See Table 2
	Nickel	27.3	*	Background Level	See Table 2
	Potassium	4,400		Background Level	NE
	Selenium	1.47	*	Background Level	See Table 2
	Silver	5.15		Soil Ecological Comparison Value (ECV)	See Table 2
	Sodium	2,070		Background Level	NE
	Thallium	0.78		EPA Residential RSL	See Table 2
	Vanadium	52.2	*	Background Level	See Table 2
	Zinc	58	*	Background Level	See Table 2

TABLE 1
Reference List of Potentially Applicable Analytes and Associated Screening Levels (rev. July 2015)
Management Protocol for Handling and Disposition of Displaced Material
PG&E Topock Compressor Station, Needles, California

Group	Analyte	Interim Screening Level	Interim Screening Level Source	Hazardous Waste Disposal Criteria
Pesticides (µg/kg)				
	4,4-DDD	2.1	Soil Ecological Comparison Value (ECV)	See Table 2
	4,4-DDE	2	EPA Residential RSL	See Table 2
	4,4-DDT	1.9	EPA Residential RSL	See Table 2
	Aldrin	39	EPA Residential RSL	See Table 2
	alpha-BHC	86	EPA Residential RSL	NE
	alpha-Chlordane	470	Soil Ecological Comparison Value (ECV)	See Table 2
	beta-BHC	300	EPA Residential RSL	NE
	delta-BHC	300	EPA Residential RSL	NE
	Dieldrin	5	Soil Ecological Comparison Value (ECV)	See Table 2
	Endo sulfan I	470,000	EPA Residential RSL	NE
	Endo sulfan II	470,000	EPA Residential RSL	NE
	Endosulfan sulfate	470,000	EPA Residential RSL	NE
	Endrin	19,000	EPA Residential RSL	See Table 2
	Endrin aldehyde	19,000	EPA Residential RSL	NE
	Endrin ketone	19,000	EPA Residential RSL	NE
	gamma-BHC (Lindane)	570	EPA Residential RSL	See Table 2
	gamma-Chlordane	0.43	DTSC-Residential SLs	See Table 2
	Heptachlor	130	EPA Residential RSL	See Table 2
	Heptachlor Epoxide	70	EPA Residential RSL	See Table 2
	Methoxychlor	320,000	EPA Residential RSL	See Table 2
	Toxaphene	490	EPA Residential RSL	See Table 2
Polyaromatic Hydrocarbons (µg/kg)				
	1-Methyl naphthalene	18,000	EPA Residential RSL	NE
	2-Methyl naphthalene	240,000	EPA Residential RSL	NE
	Acenaphthene	3,600,000	EPA Residential RSL	NE
	Acenaphthylene	3,600,000	EPA Residential RSL	NE
	Anthracene	18,000,000	EPA Residential RSL	NE
	B(a)P Equivalent	16	EPA Residential RSL	NE
	Benzo (a) anthracene	160	EPA Residential RSL	NE
	Benzo (a) pyrene	16	EPA Residential RSL	NE
	Benzo (b) fluoranthene	160	EPA Residential RSL	NE
	Benzo (ghi) perylene	1,800,000	EPA Residential RSL	NE
	Benzo (k) fluoranthene	0.39	DTSC-Residential SLs	NE
	Chrysene	3.9	DTSC-Residential SLs	NE
	Dibenzo (a,h) anthracene	16	EPA Residential RSL	NE
	Fluoranthene	2,400,000	EPA Residential RSL	NE
	Fluorene	2,400,000	EPA Residential RSL	NE
	Indeno (1,2,3-cd) pyrene	160	EPA Residential RSL	NE
	Naphthalene	3,800	EPA Residential RSL	NE
	PAH High molecular weight	1,160	Soil Ecological Comparison Value (ECV)	NE
	PAH Low molecular weight	10,000	Soil Ecological Comparison Value (ECV)	NE
	Phenanthrene	1,800,000	EPA Residential RSL	NE
	Pyrene	1,800,000	EPA Residential RSL	NE
Polychlorinated Biphenyls (µg/kg)				
	Aroclor 1016	0.23	DTSC-Residential SLs	See Table 2
	Aroclor 1221	170	EPA Residential RSL	See Table 2

TABLE 1
Reference List of Potentially Applicable Analytes and Associated Screening Levels (rev. July 2015)
Management Protocol for Handling and Disposition of Displaced Material
PG&E Topock Compressor Station, Needles, California

Group	Analyte	Interim Screening Level	Interim Screening Level Source	Hazardous Waste Disposal Criteria
Polychlorinated Biphenyls (µg/kg)				
	Aroclor 1232	170	EPA Residential RSL	See Table 2
	Aroclor 1242	230	EPA Residential RSL	See Table 2
	Aroclor 1248	230	EPA Residential RSL	See Table 2
	Aroclor 1254	240	EPA Residential RSL	See Table 2
	Aroclor 1260	240	EPA Residential RSL	See Table 2
	Aroclor 1262	240	EPA Residential RSL	See Table 2
	Aroclor 1268	240	EPA Residential RSL	See Table 2
	Total PCBs	204	Soil Ecological Comparison Value (ECV)	See Table 2
Semivolatile Organic Compounds (µg/kg)				
	1,1´-Biphenyl	47,000	EPA Residential RSL	NE
	1,2,4,5-Tetrachlorobenzene	23,000	EPA Residential RSL	NE
	1,4-Dioxane	5,300	EPA Residential RSL	NE
	2,3,4,6-Tetrachlorophenol	1,900,000	EPA Residential RSL	NE
	2,4,5-Trichlorophenol	6,300,000	EPA Residential RSL	See Table 2
	2,4,6-Trichlorophenol	7.5	DTSC-Residential SLs	See Table 2
	2,4-Dichlorophenol	190,000	EPA Residential RSL	NE
	2,4-Dimethylphenol	1,300,000	EPA Residential RSL	NE
	2,4-Dinitrophenol	130,000	EPA Residential RSL	NE
	2,4-Dinitrotoluene	1,700	EPA Residential RSL	See Table 2
	2,6-Dinitrotoluene	360	EPA Residential RSL	NE
	2-Chloro naphthalene	4,800,000	EPA Residential RSL	NE
	2-Chlorophenol	390,000	EPA Residential RSL	NE
	2-Methylphenol (o-Cresol)	3,200,000	EPA Residential RSL	See Table 2
	2-Nitroaniline	630,000	EPA Residential RSL	NE
	3,3-Dichlorobenzidene	1,200	EPA Residential RSL	NE
	3-Nitroaniline	630,000	EPA Residential RSL	NE
	4,6-Dinitro-2-methylphenol	5,100	EPA Residential RSL	NE
	4-Chloro-3-methylphenol	6,300,000	EPA Residential RSL	NE
	4-Chloroaniline	2,700	EPA Residential RSL	NE
	4-Methylphenol (p-Cresol)	500	Soil Ecological Comparison Value (ECV)	See Table 2
	4-Nitroaniline	27,000	EPA Residential RSL	NE
	Acetophenone	7,800,000	EPA Residential RSL	NE
	Atrazine	2,400	EPA Residential RSL	NE
	Benzaldehyde	7,800,000	EPA Residential RSL	NE
	Benzoic acid	250,000,000	EPA Residential RSL	NE
	Benzyl alcohol	6,300,000	EPA Residential RSL	NE
	Bis (2-chloroethoxy) methane	190,000	EPA Residential RSL	NE
	Bis (2-ethylhexyl) phthalate	2,870	Soil Ecological Comparison Value (ECV)	NE
	Butyl benzyl phthalate	290,000	EPA Residential RSL	NE
	Caprolactam	31,000,000	EPA Residential RSL	NE
	Carbazole	1,600,000	EPA Residential RSL	NE
	Dibenzofuran	73,000	EPA Residential RSL	NE
	Diethyl phthalate	51,000,000	EPA Residential RSL	NE
	Dimethyl phthalate	51,000,000	EPA Residential RSL	NE
	Di-N-butyl phthalate	46.9	Soil Ecological Comparison Value (ECV)	NE
	Di-N-octyl phthalate	630,000	EPA Residential RSL	NE
	Hexachlorobenzene	210	EPA Residential RSL	See Table 2

TABLE 1
Reference List of Potentially Applicable Analytes and Associated Screening Levels (rev. July 2015)
Management Protocol for Handling and Disposition of Displaced Material
PG&E Topock Compressor Station, Needles, California

Group	Analyte	Interim Screening Level	Interim Screening Level Source	Hazardous Waste Disposal Criteria
Semivolatile Organic Compounds (µg/kg)				
	Hexachloroethane	1,800	EPA Residential RSL	See Table 2
	N-Nitroso-di-n-propylamine	78	EPA Residential RSL	NE
	N-nitrosodiphenylamine	110,000	EPA Residential RSL	NE
	Pentachlorophenol	1,000	EPA Residential RSL	See Table 2
	Phenol	19,000,000	EPA Residential RSL	NE
Total Petroleum Hydrocarbons (mg/kg)				
	TPH as diesel	240	SF RWQCB ESL for direct exposure (2013)	NE
	TPH as gasoline	770	SF RWQCB ESL for direct exposure (2013)	NE
	TPH as motor oil	10,000	SF RWQCB ESL for direct exposure (2013)	NE
Volatile Organic Compounds (µg/kg)				
	1,1,1,2-Tetrachloroethane	550	DTSC-Residential SLs	NE
	1,1,1-Trichloroethane	1,700	DTSC-Residential SLs	NE
	1,1,2,2-Tetrachloroethane	600	EPA Residential RSL	NE
	1,1,2-Trichloroethane	1,100	EPA Residential RSL	NE
	1,1,2-Trichlorotrifluoroethane (Freon 113)	40,000,000	EPA Residential RSL	NE
	1,1-Dichloroethane	1,600	DTSC-Residential SLs	NE
	1,1-Dichloroethene	230,000	EPA Residential RSL	See Table 2
	1,1-Dichloropropene	1,800	EPA Residential RSL	NE
	1,2,3-Trichlorobenzene	63,000	EPA Residential RSL	NE
	1,2,3-Trichloropropane	5.1	EPA Residential RSL	NE
	1,2,4-Trichlorobenzene	24,000	EPA Residential RSL	NE
	1,2,4-Trimethylbenzene	58,000	EPA Residential RSL	NE
	1,2-Dibromo-3-chloropropane	5.3	EPA Residential RSL	NE
	1,2-Dibromoethane	7.2	DTSC-Residential SLs	NE
	1,2-Dichlorobenzene	1,800,000	EPA Residential RSL	NE
	1,2-Dichloroethane	460	EPA Residential RSL	See Table 2
	1,2-Dichloropropane	1,000	EPA Residential RSL	NE
	1,3,5-Trimethylbenzene	210	DTSC-Residential SLs	NE
	1,3-Dichlorobenzene	1,800,000	EPA Residential RSL	NE
	1,3-Dichloropropane	420	DTSC-Residential SLs	NE
	1,4-Dichlorobenzene	2,600	EPA Residential RSL	See Table 2
	2,2-Dichloropropane	1,600,000	EPA Residential RSL	NE
	2-Chlorotoluene	480	DTSC-Residential SLs	NE
	2-Hexanone	200,000	EPA Residential RSL	NE
	4-Isopropyltoluene	1,900,000	EPA Residential RSL	NE
	Acetone	61,000,000	EPA Residential RSL	NE
	Acrolein	140	EPA Residential RSL	NE
	Acrylonitrile	0.068	DTSC-Residential SLs	NE
	Benzene	0.33	DTSC-Residential SLs	See Table 2
	Bis (2-chloroethyl) ether	230	EPA Residential RSL	NE
	Bis (2-chloroisopropyl) ether	4,900	EPA Residential RSL	NE
	Bromobenzene	290,000	EPA Residential RSL	NE
	Bromochloromethane	150,000	EPA Residential RSL	NE
	Bromodichloromethane	280	DTSC-Residential SLs	NE
	Bromoform	19,000	EPA Residential RSL	NE
	Bromomethane	6,800	EPA Residential RSL	NE

TABLE 1
Reference List of Potentially Applicable Analytes and Associated Screening Levels (rev. July 2015)
Management Protocol for Handling and Disposition of Displaced Material
PG&E Topock Compressor Station, Needles, California

Group	Analyte	Interim Screening Level	Interim Screening Level Source	Hazardous Waste Disposal Criteria
Volatile Organic Compounds (µg/kg)				
	Carbon disulfide	770,000	EPA Residential RSL	NE
	Carbon tetrachloride	0.099	DTSC-Residential SLs	See Table 2
	Chlorobenzene	280,000	EPA Residential RSL	See Table 2
	Chloroethane	3.1	DTSC-Residential SLs	NE
	Chloroform	320	EPA Residential RSL	See Table 2
	Chloromethane	110,000	EPA Residential RSL	NE
	cis-1,2-Dichloroethene	19	DTSC-Residential SLs	NE
	cis-1,3-Dichloropropene	1,800	EPA Residential RSL	NE
	Cyclohexane	6,500,000	EPA Residential RSL	NE
	Dibromochloromethane	750	EPA Residential RSL	NE
	Dibromomethane	23,000	EPA Residential RSL	NE
	Dichlorodifluoromethane	87,000	EPA Residential RSL	NE
	Ethylbenzene	5,800	EPA Residential RSL	NE
	Hexachlorobutadiene	1,200	EPA Residential RSL	See Table 2
	Hexachlorocyclopentadiene	1,800	EPA Residential RSL	NE
	Isophorone	570,000	EPA Residential RSL	NE
	Isopropylbenzene	1,900,000	EPA Residential RSL	NE
	m,p-Xylenes	550,000	EPA Residential RSL	NE
	Methyl acetate	24,000	DTSC-Residential SLs	NE
	Methyl ethyl ketone	27,000,000	EPA Residential RSL	See Table 2
	Methyl isobutyl ketone	5,300,000	EPA Residential RSL	NE
	Methyl tert-butyl ether (MTBE)	47,000	EPA Residential RSL	NE
	Methylcyclohexane	6,500,000	EPA Residential RSL	NE
	Methylene chloride	5.5	DTSC-Residential SLs	NE
	N-Butylbenzene	1,200	DTSC-Residential SLs	NE
	Nitrobenzene	5,100	EPA Residential RSL	See Table 2
	N-Propylbenzene	3,800,000	EPA Residential RSL	NE
	o-Xylene	650,000	EPA Residential RSL	NE
	p-Chlorotoluene	440	DTSC-Residential SLs	NE
	sec-Butylbenzene	2,200	DTSC-Residential SLs	NE
	Styrene	6,000,000	EPA Residential RSL	NE
	tert-Butylbenzene	2,200	DTSC-Residential SLs	NE
	Tetrachloroethene	0.6	DTSC-Residential SLs	See Table 2
	Toluene	1,100	DTSC-Residential SLs	NE
	trans-1,2-Dichloroethene	190	DTSC-Residential SLs	NE
	trans-1,3-Dichloropropene	1,800	EPA Residential RSL	NE
	Trichloroethene	940	EPA Residential RSL	See Table 2
	Trichlorofluoromethane (Freon 11)	730,000	EPA Residential RSL	NE
	Vinyl chloride	59	EPA Residential RSL	See Table 2
	Xylenes, total	650,000	EPA Residential RSL	NE

Notes:

This table presents a reference list of analytes and associated screening levels that may be applicable for making decisions related to disposition of displaced site materials. The specific analytes and screening levels applicable for characterization of displaced material will be determined based on the origin of the material and potential disposition locations.

Interim screening level is background value. If background value is not available then the lesser of the DTSC HHRA Note 3 Residential Screening Levels (DTSC Residential SL) or the ecological comparison value is used. If a DTSC Residential SL is not available, it is the lesser of the USEPA residential regional screening level or the ecological comparison value.

Background	"Final Soil Background Investigation at Pacific Gas and Electric Company Topock Compressor Station, Needles, California" (CH2M HIll 2009c)
DTSC-Residential SLs	Human Health Risk Assessment Note 3 – DTSC-Modified Screening Levels, May 2015.
EPA Residential RSL	United States Environmental Protection Agency Residential Soil Regional Screening Level (THQ=1.0), June 2015.
ECV	Ecological Comparison Values; ECV were calculated as needed for constituents detected during the Part A Phase I sampling (Arcadis 2008)
HHRA Note 2	DTSC Human Health Risk Assessment (HHRA) Note 2: Remedial Goals for Dioxins and Dioxin-like Compounds for Consideration at California Hazardous Waste Sites – Interim (May 2009).
SF RWQCB ESL	San Francisco Bay Regional Water Quality Control Board Environmental Screening Levels for residential direct exposure (2013)
*	One or more screening levels (EPA Residential RSL, DTSC-Residential SLs, ECV, or Soil SL) have values lower than the background level.
NE	not established
mg/kg	milligrams per kilogram
ng/kg	nanograms per kilogram
µg/kg	micrograms per kilogram

TABLE 2

Hazardous Waste Toxicity Characteristic Levels

Management Protocol for Handling and Disposition of Displaced Material

PG&E Topock Compressor Station, Needles, California

Group	Analyte	TTLC [a, i]	STLC [b] Screen	RCRA TC [c] Screen	STLC [d, i] (from WET)	RCRA TC [e] (from TCLP)	EPA HW [f]
		mg/kg	mg/kg	mg/kg	mg/L	mg/L	
Asbetos							
	Asbestos	1%	NE	NE	NE	NE	NE
Dioxins and Furans							
	2,3,7,8-TCDD	0.01	0.01	NE	0.001	NE	NE
Metals							
	Antimony	500	150	NE	15	NE	NE
	Arsenic	500	50	100	5	5	D004
[j]	Barium	10,000	1,000	2,000	100	100	D005
	Beryllium	75	7.5	NE	0.75	NE	NE
	Cadmium	100	10	20	1	1	D006
	Chromium, Hexavalent	500	50	NE	5	NE	NE
[k]	Chromium, total	2,500	50	100	5	5	D007
	Cobalt	8,000	800	NE	80	NE	NE
	Copper	2,500	250	NE	25	NE	NE
	Lead	1,000	50	100	5	5	D008
	Mercury	20	2	4	0.2	0.2	D009
[l]	Molybdenum	3,500	3,500	NE	350	NE	NE
	Nickel	2,000	200	NE	20	NE	NE
	Selenium	100	10	20	1	1	D010
	Silver	500	50	100	5	5	D011
	Thallium	700	70	NE	7	NE	NE
	Vanadium	2,400	240	NE	24	NE	NE
	Zinc	5,000	2,500	NE	250	NE	NE
Pesticides							
	4,4-DDD	1	1	NE	0.1	NE	NE
	4,4-DDE	1	1	NE	0.1	NE	NE
	4,4-DDT	1	1	NE	0.1	NE	NE
	Aldrin	1.4	1.4	NE	0.14	NE	NE
	alpha-Chlordane	2.5	2.5	0.6	0.25	0.03	D020
	Dieldrin	8	8	NE	0.8	NE	NE
	Endrin	0.2	0.2	0.4	0.02	0.02	D012
	gamma-BHC (Lindane)	4	4	8	0.4	0.4	D013
	gamma-Chlordane	2.5	2.5	0.6	0.25	0.03	D020
	Heptachlor	4.7	4.7	0.16	0.47	0.008	D031
	Heptachlor Epoxide	4.7	4.7	0.16	0.47	0.008	D031
	Methoxychlor	100	100	200	10	10	D014
	Toxaphene	5	5	10	0.5	0.5	D015
Polychlorinated Biphenyls							
	Aroclor 1016	50	50	NE	5	NE	NE
	Aroclor 1221	50	50	NE	5	NE	NE
	Aroclor 1232	50	50	NE	5	NE	NE
	Aroclor 1242	50	50	NE	5	NE	NE
	Aroclor 1248	50	50	NE	5	NE	NE
	Aroclor 1254	50	50	NE	5	NE	NE
	Aroclor 1260	50	50	NE	5	NE	NE
	Aroclor 1262	50	50	NE	5	NE	NE
	Aroclor 1268	50	50	NE	5	NE	NE

TABLE 2

Hazardous Waste Toxicity Characteristic Levels

Management Protocol for Handling and Disposition of Displaced Material

PG&E Topock Compressor Station, Needles, California

Group	Analyte	TTLC [a, i]	STLC [b] Screen	RCRA TC [c] Screen	STLC [d, i] (from WET)	RCRA TC [e] (from TCLP)	EPA HW [f]
		mg/kg	mg/kg	mg/kg	mg/L	mg/L	
Polychlorinated Biphenyls							
	Total PCBs	50	50	NE	5	NE	NE
Semivolatile Organic Compounds							
	2,4-Dinitrotoluene	NE	NE	2.6	NE	0.13	D030
g	2-Methylphenol (o-Cresol)	NE	NE	4,000	NE	200	D023
g	3-Methylphenol (m-Cresol)	NE	NE	4,000	NE	200	D024
g	4-Methylphenol (p-Cresol)	NE	NE	4,000	NE	200	D025
	Hexachlorobenzene	NE	NE	2.6	NE	0.13	D032
	Hexachloroethane	NE	NE	60	NE	3	D034
	Pentachlorophenol	17	17	2,000	1.7	100	D037
Volatile Organic Compounds							
	1,1-Dichloroethene	NE	NE	14	NE	0.7	D029
	1,2-Dichloroethane	NE	NE	10	NE	0.5	D028
	1,4-Dichlorobenzene	NE	NE	150	NE	7.5	D027
	2,4,5-Trichlorophenol	NE	NE	8,000	NE	400	D041
	2,4,6-Trichlorophenol	NE	NE	40	NE	2	D042
	Benzene	NE	NE	10	NE	0.5	D018
	Carbon tetrachloride	NE	NE	10	NE	0.5	D019
	Chlorobenzene	NE	NE	2,000	NE	100	D021
	Chloroform	NE	NE	120	NE	6	D022
	Hexachlorobutadiene	NE	NE	10	NE	0.5	D033
	Methyl ethyl ketone	NE	NE	4,000	NE	200	D035
	Nitrobenzene	NE	NE	40	NE	2	D036
	Tetrachloroethene	NE	NE	14	NE	0.7	D039
	Trichloroethene	2,040	2,040	10	204	0.5	D040
	Vinyl chloride	NE	NE	4	NE	0.2	D043

Notes:

NE	not established
mg/kg	milligrams per kilogram
mg/L	milligrams per liter
EPA HW	Environmental Protection Agency Hazardous Waste Code
TC	Toxicity Characteristic
TTLC	Total Threshold Limit Concentration
STLC	Soluble Threshold Limit Concentration
RCRA	Resource Conservation and Recovery Act
TCLP	Toxicity Characteristic Leaching Procedure
WET	California Waste Extraction Test

Hazardous waste critiera exist for kepone, 2,4-D, mirex, pyridine, and 2,45-TP (Silvex); however, since they are not contaminants of potential concern at the Topock site, they are excluded from this table.

a	Total Threshold Limit Concentration (TTLC) from 22 CCR 66261.24(a)(2). Calculated based on the concentration of the elements, not the compounds.
b	Screening level is 10x Soluble Threshold Limit Concentraction (STLC). If screening level is exceeded in total analysis, California Waste Extraction Test (WET) should be run to evaluate whether STLC is exceeded.
c	Screening level is 20x RCRA Toxicity Characteristic (TC). If screening level is exceeded in total analysis, Toxicity Characteristic Leaching Procedure (TCLP) should be run to evaluate whether RCRA TC is exceeded.
d	Soluble threshold limit concentration from 22 CCR 66261.24(a)(2), measured using the WET. Calculated based on the concentration of the elements, not the compounds.
e	RCRA TC level from 22 CCR 66261.24(a)(1), measured using the TCLP.
f	A waste is assigned a RCRA waste code for each constituent where the results of the TCLP equal or exceed the RCRA TC level.
g	If o-, m- and p-Cresol concentrations cannot be differentiated, the total cresol (D026) concentration is used. The regulatory level of total cresol is 200 mg/L.
h	This footnote letter skipped intentionally.
i	In the case of asbestos and elemental metals, the specified concentration limits apply only if the substances are in a friable, powdered or finely divided state. Asbestos includes chrysotile, amosite, crocidolite, tremolite, anthophyllite, and actinolite.
j	TTLC and STLC exclude barite. TTLC excludes barium sulfate.
k	For STLC, if the waste does not exceed the RCRA TC or exhibit another RCRA hazardous characteristic, the STLC is 560 mg/L, not 5 mg/L.
l	For TTLC, excludes molybdenum disulfide.

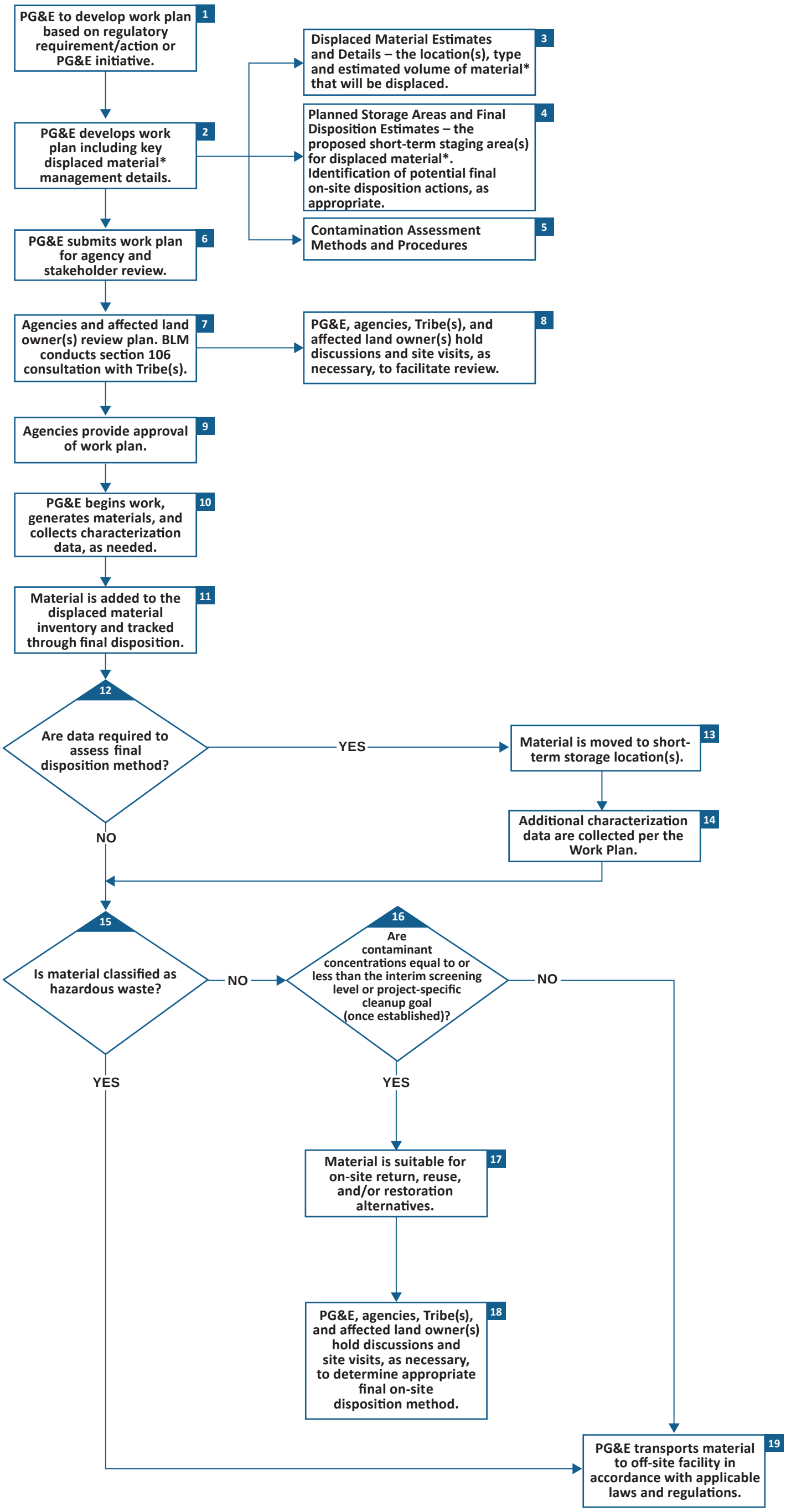

Notes:

* Throughout this figure the term "material" is defined as soil and rock that may be displaced (i.e., removed from the Earth) as a result of work activities including drilling, excavation, sample collection, testing, construction, grading, or other activities. This does not include materials that were not part of the natural site condition (e.g. building materials, equipment, or imported fill).

Throughout this figure, the term “site” refers to the area within the Area of Potential Effect (APE).

FIGURE 1
General Management Protocol for Handling and Disposition of Displaced Site Material
PG&E Topock Remediation Project
Needles, California

Pacific Gas and Electric Company®

Attachment 1:
Responses to Comments

PG&E TOPOCK COMPRESSOR STATION
COMBINED COMMENTS RECEVIED FROM: DOI, DTSC, FMIT, AND THE TRC
ON THE DRAFT (MAY 14, 2012) "MANAGEMENT PROTOCOL FOR HANDLING AND DISPOSITION OF DISPLACED SITE MATERIAL, TOPOCK REMEDIATION PROJECT, NEEDLES, CALIFORNIA" AND ASSOCIATED PG&E RESPONSES, FOR DISCUSSION

Absolute Comment No.	Agency Comment No.	Comment Location (Page)	Commenter	Reference Text	Comment	PG&E Response and/or Proposed Edits	Comment Status
1	In redline	Page 3, Handling and Short Term Storage First paragraph	DTSC	In some cases, short-term storage for characterization may not be necessary.	List some examples for clarity.	In situations where characterization data is available prior to disturbance, or is made available during disturbance (e.g. field screening or expedited laboratory analysis), short-term storage may not be necessary. Text will be revised to read as follows (changes in bold): "In some cases, short-term storage for characterization may not be necessary. **For example,** displaced material that is pre-characterized **or characterized rapidly as work is conducted** will be managed **directly** for long-term storage or final disposition, as appropriate (see Sections 3.4 and 3.5, respectively).	Resolved.
2	In redline	Page 3, Handling and Short Term Storage First paragraph	DTSC	Displaced material that is pre-characterized **per an agency approved work plan** will be managed for long-term storage or final disposition, as appropriate (see Sections 3.4 and 3.5, respectively)	Strike "per an agency approved work plan". Comment: Data may come from other sources (e.g., opportunistic samples). No need to limit available data.	Text will be deleted. See revised text in response to comment 1.	Resolved.
3	In redline	Page 4, Handling and Short Term Storage Final bullet	DTSC	Final disposition information – Indication of the **on-site** or off-site final disposition action identified through discussion with Tribe(s), agencies, and the affected land owner(s), as appropriate, based on review of material type and the contamination assessment (see Section 3.5).	Comment: Need to define "on-site/site/on site" used throughout the document to clearly understand where soil may end up.	The following statement has been added to the end of the second paragraph in Section 1.0: "Throughout this document, the term "site" refers to the area within the APE."	Resolved.
4	In redline	Page 4, Contamination Assessment First bullet	DTSC	Existing information including knowledge of the history of an area, or laboratory analytical results collected during previous phases of work. Use of existing information may preclude the need for additional analytical testing. When available, this information **should** be included in the work plan.	Replace "should" with "will".	Concur. The change has been incorporated.	Resolved.
5	In redline	Page 5, Contamination Assessment – (bullet) Hazardous Waste Toxicity Characteristic Levels Bullet 2	DTSC	If the total constituent concentration exceeds the numeric value of the RCRA toxicity characteristic (TC) level by **about** 20 times or more, the toxicity characteristic leaching procedure (TCLP) will be performed. If the constituent concentration in the TCLP leachate exceeds the TC level, the soil represented by the sample will be classified as a RCRA hazardous waste. Additional evaluation of the STLC, as described in step 3 below, will not be performed.	Add word "about". Comment: Adding flexibility to conduct leach tests if the dry values are in the neighborhood. Do this due to potential for soil to be heterogeneous.	Concur. The change has been incorporated.	Resolved.

Absolute Comment No.	Agency Comment No.	Comment Location (Page)	Commenter	Reference Text	Comment	PG&E Response and/or Proposed Edits	Comment Status
6	In redline	Page 5, Contamination Assessment – (bullet) Hazardous Waste Toxicity Characteristic Levels Bullet 3	DTSC	If the sample has not been classified as hazardous waste in steps 1 or 2, the total constituent concentration will be compared to the STLC. If the total constituent concentration exceeds the numeric value of the STLC by **about** 10 times or more, the California Waste Extraction Test (WET) will be performed. If the constituent concentration in the WET exceeds the STLC, the soil represented by the sample will be classified as a non-RCRA California hazardous waste.	Add word "about".	Concur. The change has been incorporated.	Resolved.
7	In redline	Page 5, Contamination Assessment Last paragraph, last sentence	DTSC	As changes are determined appropriate, PG&E will submit revisions to the regulatory agencies and Tribe(s) for review **and acceptance. Only agency approved values will be utilized.**	Add text in bold.	Concur. Final text based on discussion with DTSC: As changes are determined appropriate, PG&E will submit revisions to the regulatory agencies and Tribe(s) for review and comment. Only agency approved values will be utilized.	Resolved.
8	1	End of document Table 2	DTSC	None.	The document does not speak to inside the fence line versus outside the fence line. If we use the Interim Screening Levels identified in this document for displaced soils originating from inside the fence line, there is a potential that more soil will be stored unnecessarily as inside the fence line soils would probably exceed background levels.	The management protocol currently addresses all material, regardless of area of origin, in the same way. A screening level specific to material inside the fence line may be established at a later date. As discussed at the end of Section 3.3, this management protocol will be updated as applicable regulations and project-specific decisions are made.	Resolved.
9	2	End of document	DTSC	None.	Will inside the fence line soils versus outside the fence line soils be allowed to move back and forth? How does this tie into the on-site soil management plan (SMP) being developed by PG&E? Discuss components of the SMP in this protocol.	This management protocol will be applied to material displaced as a result of remediation project activities regardless of whether the material originated inside or outside the fence line. Therefore soils may move outside from inside, or potentially vice-versa depending on designated storage areas or reuse options. The SMP will mirror the concepts in this protocol. Because this document is the standard protocol and the SMP will be a standalone document as part of the operations and maintenance manual for the groundwater remedy, the SMP will reference this document and include additional detail, but we do not see a reason to reference the SMP in this protocol. Further, this management protocol will be updated as is determined necessary based on additional details included in the finalized SMP.	**Subsequent DTSC Comment:** The comment should be revised to clarify that the SMP is not limited to groundwater and is intended to ensure potentially contaminated soils are adequately identified and handled at the compressor station (inside the fence line). See absolute comment 154 from the RTC table (June 29, 2012) for the soils work plan. **PG&E Response:** The SMP is part of the final groundwater remedy design document, and therefore, is specific to groundwater. However, details regarding the management of potentially contaminated soils on the compressor station (inside the fence line) will be addressed in the Soil RFI/RI Work Plan (Appendix J – Displaced Soil and Hazardous Waste Management Procedures). Resolved.

Absolute Comment No.	Agency Comment No.	Comment Location (Page)	Commenter	Reference Text	Comment	PG&E Response and/or Proposed Edits	Comment Status
10	3	End of document Table 1	DTSC	None.	Interim Screening Level Source: Include soils screening levels for groundwater protection as screening criteria.	The Interim Screening Level represents the most conservative value, and are lower than the soil screening level for groundwater protection, with the exception of hexavalent chromium and molybdenum. The soil screening level for protection to groundwater for hexavalent chromium and molybdenum is below the background concentration for these metals. Final reuse decisions will be based on the more conservative Interim Screening Level or the project-specific clean up goal (or hazardous waste criteria), and therefore inclusion of soil screening levels for groundwater protection would not add a meaningful decision criteria to the protocol.	**Subsequent DTSC Comment:** Table 1 will need to be modified to identify that the soil screening level for molybdenum is below background. **PG&E Response:** Concur. The edit has been made. Resolved.
11	4	End of document Table 1	DTSC	None.	Interim Screening Level: The protocol should address screening criteria for vapor intrusion to indoor air, to ensure that vapor intrusion pathways will not be potentially created (e.g., do not place VOC impacted soil in areas that have, or likely to have enclosed structures such as MW-20 bench).	VOCs have not been detected in soils to date. Therefore there is no need to develop screening levels that are protective of indoor air from vapor intrusion pathways. However, the following statement will be added to second paragraph of Section 4.0: "Further, if material is found to contain concentrations of volatile organic compounds it may not be suitable for return, reuse, and/or restoration near buildings where vapor intrusion would be of concern."	Resolved.
12	5	End of document Table 1 - Notes	DTSC	None.	Include fluoride salts as they are COPC.	The note in Table 2 has been revised as discussed with DTSC.	Resolved.
13	6	End of document Table 2	DTSC	None.	Any listed wastes to be concerned with?	At this time we are not aware of any listed wastes that need to be considered for this management protocol. Additional soil data is pending collection as part of the soil investigation. As discussed at the end of Section 3.3, this management protocol will be updated as applicable regulations and project-specific decisions are made.	Resolved.
14	In redline	Figure 1	DTSC	**Agencies direct** PG&E to develop work plan based on regulatory requirement or action.	Revised text: PG&E to develop work plan based on regulatory requirement/action **or PG&E initiative**.	Concur. The change will be incorporated.	Resolved.
15	In redline	Figure 1	DTSC	PG&E begins work and generates material.	Revised text: PG&E begins work and generates material **and characterization data**.	To clarify, the word "additional" will be deleted from the decision box two levels below the box commented on, and the original box will not be edited.	**Subsequent DTSC Comment:** Edits were not completed as stated in text. Box 10: Add "characterization" in front of "data". Box 12: Delete "additional" as proposed. **PG&E Response:** Concur. The edits have been made. Resolved.
16	In redline	Figure 1	DTSC	Material is suitable for **on-site** return, reuse, and/or restoration alternatives.	Define "on-site".	The following note has been added to the figure: "Throughout this figure, the term "site" refers to the area within the Area of Potential Effect (APE)."	Resolved.

Absolute Comment No.	Agency Comment No.	Comment Location (Page)	Commenter	Reference Text	Comment	PG&E Response and/or Proposed Edits	Comment Status
17	In redline	Page 5, Contamination Assessment Last paragraph, last sentence	DOI	As changes are determined appropriate, PG&E will submit revisions to the regulatory agencies and Tribe(s) for review **and acceptance. Only agency approved values will be utilized.**	It is unclear what is meant by acceptance. (See also comment 7 [DTSC])	See response to comment 7 (DTSC).	Resolved.
18	In redline	Page 6, Long-term Storage First paragraph, second sentence	DOI	Per DOI comment on this protocol (received in February 2012), this material must remain on-site until project-specific cleanup goals are finalized.	For clarification, DOI stated that the material could not be returned to the land until cleanup criteria are finalized in the ROD and may be stored until that time.	To clarify, the text has been revised as follows: "Per DOI comment on this protocol (received in February 2012), this material cannot be returned to the land until cleanup criteria are finalized in the Record of Decision (ROD) and may be stored until that time."	Resolved.
19	1		FMIT	None.	The 5-14-12 draft protocol still does not address the matter of the existing inventory of displaced soils. It only looks forward to activities that will involve soil disturbance as part of future work plans. This comment has been made previously by FMIT, but the issue remains unaddressed. The existing inventory of displaced soils must be addressed in this protocol. It is not anticipated that the handling and disposition of the existing soil inventory would be different from procedures and policies for addressing future displaced soils. A section of this protocol must address disposition of the existing displaced soils inventory.	As stated in the first sentence of the document, the intent is for this management protocol to apply to material that is displaced as a result of past (as practical), present, and future activities associated with the Topock Remediation Project. To speak specifically to the inventory of previously displaced soils at the site, the following text has been added to the end of Section 4.0 (Return, Reuse, and/or Restoration of Displaced Site Material): "Material displaced as part of past remediation project activities was managed in accordance with project-specific work plans. As a result, some material has been retained at the site because contaminant concentrations were below the Interim Screening Level (previously displaced material that has exceeded these levels was disposed off-site in accordance with the work plans). Therefore, previously displaced material is available for the return, reuse, and/or restoration alternatives included in the bullets above, or as additional uses are developed. As of June 2012, the estimated volume of material that has been retained and stockpiled through past remediation project activities is approximately 30 to 35 cubic yards."	
20	2		FMIT	None.	The draft does not address soil disturbances associated with the soils investigation. It appears that only soils displaced as a result of the groundwater remedy activities are explicitly covered. Again, this point has been raised by FMIT but remains largely unaddressed. FMIT realizes the necessity and importance of PG&E's addressing the respective mitigation measure (CUL-1a-8[g]) but that measure does not exclude applying these procedures to all displaced soils. The issue of soil handling was initially raised by FMIT years ago, and was not intended to be limited to the fulfillment of a mitigation measure for, or the implementation of, the groundwater remedy. PG&E has apparently reframed the issue to limit the scope of the protocol, however, the FMIT is concerned with the disturbance and displacement of soils, regardless of the	Based on clarification received from FMIT during the June 15, 2012 call, the tribes want this protocol to be inclusive of all activities at the Topock Compressor Station. This topic has been tabled for future discussion with PG&E, and the protocol will not be modified at this time. DTSC comment from September 18, 2012 letter to FMIT in response to September 7, 2012 letter from FMIT: As indicated in the first paragraph of the Protocol, "*This document presents the general approach and management protocol required for the handling and disposition of soil and/or rock (referred to as "material" throughout the document) that is displaced as a result of past (as practical), present, and future activities*	The Tribe believes that this item has not yet been adequately addressed. The Tribe's position on this item is documented in the letter attached to the RTCs table. The agency response letter is also attached.

Absolute Comment No.	Agency Comment No.	Comment Location (Page)	Commenter	Reference Text	Comment	PG&E Response and/or Proposed Edits	Comment Status
					associated activity or remedial action at the Site, and expects the PG&E and the Agencies to examine and find solutions for the whole of the issue.	*associated with the Pacific Gas and Electric Company (PG&E) Topock Remediation Project, Needles, California. Specifically, this includes material removed from the Earth (i.e., displaced) as a result of drilling, excavation, sampling, testing, construction, grading, and other remedial activities*". As cited, DTSC does not interpret the Protocol to be limited only to soil displaced as a result of groundwater remedy implementation. On the contrary, the scope appears to be sufficiently broad to cover all aspects of the environmental project conducted under the oversight of DTSC and the US Department of the Interior. DTSC is aware, however, that this protocol, once developed, could be submitted by PG&E to comply with a portion of Mitigation Measure CUL-1a-8 of the certified Final Environmental Impact Report where PG&E is to develop a protocol for handling soil cuttings to be included in the Cultural Impact Mitigation Program as part of the final design of the approved groundwater remedy. Currently, DTSC is in the process of conducting a California Environmental Quality Act (CEQA) evaluation for the soil investigation work plan. Based on the results of the soil CEQA evaluation, the same mitigation measure may be found to be appropriate for the soil investigation activities. Note that displaced soils from soil investigation activities will not be generated until after the soil CEQA evaluation is completed and the soil investigation work plan is approved.	
21	3		FMIT	None.	There is no commitment to minimize disturbances that are not associated with the listed activities as a result of incidental or associated activities (e.g., vehicles, etc.). PG&E is directing this primarily at CUL-1a-8[g], however, FMIT again requests that these procedures be a broader statement of policy committing to minimization or disturbance for all Site activities. Other soil disturbing activities that PG&E might perform should also 'voluntarily' follow this protocol.	See response to comment 20 (FMIT). Per Aug-6, 2012 discussion, additional detail was added to the bullets in Section 3.1 regarding areas of disturbance and displacement.	
22	4		FMIT	None.	The application of soil criteria for the determination of reuse needs some additional flexibility. Since there will likely be (or should be) several discrete soil samples with chemical concentrations for a given amount of soil, it is the average of these values for that soil accumulation that should be used. This is justified because exposure occurs over an area and the soil will be further mixed when it is placed back on the site.	The specific process for characterization of displaced site material is an example of a detail that would be included in the project-specific work plan. DTSC comment from September 18, 2012 letter to FMIT in response to September 7, 2012 letter from FMIT: In addition to potential concentration-by-concentration comparison between the disturbed soil and screening criteria, DTSC does not object to considering other alternative methods as long as the methods will yield data that are representative of the material in question, are in accordance with waste classification regulations, and standard practice for classifying materials such as	As of the September 7, 2012 letter, the Tribe believes that this item has not yet been adequately addressed. The Tribe's position on this item is documented in the letter attached to the RTCs table. The agency response letter is also attached. The document has been revised per the direction in the September 18, 2012 letter in response to the September 7, 2012 letter (as detailed in the column to the left).

Absolute Comment No.	Agency Comment No.	Comment Location (Page)	Commenter	Reference Text	Comment	PG&E Response and/or Proposed Edits	Comment Status
						investigation derived soil cuttings for the purposes of determining proper disposal. DTSC concurs with the approach that additional details regarding this issue can be addressed in the individual work plans. PG&E Comment – The sixth paragraph on page 5 has been revised to read as follows (text additions are in **bold**): "These values will be used to determine the final disposition of displaced material **by comparing the representative concentration of a given volume of material to the screening values. The methodology for determining the representative concentration will be established in the project-specific work plan and should not be limited to a concentration-by-concentration comparison, but could include statistical estimates or averages based on multiple samples**. Material that **has a representative concentration that** is equal to or below the interim screening level is suitable for return, reuse, or replacement on-site. Material that is characterized as hazardous waste must be disposed of off-site in accordance with applicable laws and regulations. Material that **has a representative concentration that** is greater than the interim screening level, but not classified as a hazardous waste, will be stored on-site until the project-specific cleanup goals are established. Until these goals are established, material that falls into this intermediate category will be retained on-site for "long-term storage" (see Section 3.4)."	
23	5	Table 1	FMIT		Why is the "Project-specific Cleanup Goal" differentiated from the "Tribal Screening Level"? The Tribal land use scenario is the most appropriate future land use and the calculation of risk-based concentrations is a "Project-specific Cleanup Goal" and not a screening level.	Based on discussion during the June 15, 2012 call, it is premature to have the project-specific cleanup goals and the tribal screening levels included on Table 1 since they have yet to be determined. Therefore, these columns will be deleted from Table 1. As discussed at the end of Section 3.3, this management protocol will be updated as applicable regulations and project-specific decisions are made.	
24	6		FMIT		The overall logic that would set screening criteria according to the location of origin of the soil is flawed. Soil disturbances often involve commingling of soils to various depths, while the potential exposure scenarios usually relate to materials at or near the surface. The depth of soil placement/reuse should be considered in the decision for reuse.	Separation of displaced soil to this level of detail (shallow vs. deeper) greatly increases the level of complexity related to soil testing and management scenarios and could result in a larger storage footprint, but could be accomplished. However, current return, reuse, and/or restoration scenarios are not depth-specific, and deeper reuse scenarios may be limited. Variables like future erosion or change in regulations also complicate two-tier reuse scenarios. The document will be revised as additional screening levels are developed.	The Tribe believes that this item has not yet been adequately addressed. The Tribe's position on this item is documented in the letter attached to the RTCs table. The agency response letter is also attached.

Absolute Comment No.	Agency Comment No.	Comment Location (Page)	Commenter	Reference Text	Comment	PG&E Response and/or Proposed Edits	Comment Status
						DTSC comment from September 18, 2012 letter to FMIT in response to September 7, 2012 letter from FMIT: DTSC supports PG&E's response in the RTC summary table that separation of displaced soil to this level of detail (shallow vs. deep) greatly increases the level of complexity related to soil testing and management scenarios and could result in a larger storage footprint. The current return, reuse, and/or restoration scenarios are not depth-specific, and deeper reuse scenarios may be limited. Variables like future erosion or change in regulations also complicate two-tier reuse scenarios. More importantly, the decision to reuse soil that is above screening criteria regardless of depth ultimately rests on the respective land owners who own the land where the displaced soil will be reused. If potentially contaminated soils will be reused, the land owner must agree to a land use covenant restricting the use of their land after backfilling. DTSC believes that this issue cannot be managed at a global level since the decision is dependent on location, depth, concentration of material and landowner acceptance, DTSC believes that this issue can be deferred and handled on a case-by-case basis, potentially during the individual work plan, to first determine if there are potential locations that will require deep backfill, and more importantly, the individual land-owners preference on this issue. **PG&E comment – Additional detail regarding potential material reuse scenarios that are specific to a given work plan will be included in the individual work plans, as necessary.**	
25	7	Figure 1	FMIT		We suggest adding a number to each block in the diagram for clarity. In the "second to the last block" it says "Material must be managed offsite." If contaminant concentrations are less than or equal to (<) project-specific cleanup goal, why couldn't they be treated onsite if appropriate and feasible?	Numbers will be added to flow chart boxes. The text in the "second to last block" will be modified to read as follows: "Material will be managed off site, or treated on site if appropriate based on the selection of the final soil remedy." Additional text has also been added to Section 3.5.	
26	1	Page 4, Contamination Assessment	Hualapai / TRC		Key information that will be used in assessing whether the displaced material is contaminated is discussed in Section 3.3 Contamination Assessment. Within this section it is stated that contamination determinations of displaced materials can be based on "existing information including knowledge of the history of an area" and "observation of the physical properties of the material". It is unclear however, how physical observation or historical knowledge of an area can be used in comparisons against the quantitative interim screening values provided in	Examples of key physical properties have been added to the second bullet in Section 3.3, and now reads as follows: "Results of characterization samples collected for laboratory analysis, and observation of the physical properties of the material (e.g., white powder, burned material, boulders, etc.), as defined in the approved work plan for a given activity." Regarding "existing information/history of an area", see response to comment 27 (Hualapai/TRC).	

Absolute Comment No.	Agency Comment No.	Comment Location (Page)	Commenter	Reference Text	Comment	PG&E Response and/or Proposed Edits	Comment Status
					Tables 1 and 2.		
27	2	Page 4, Contamination Assessment Third bullet.	Hualapai / TRC	The specific analytes and interim screening levels applicable for characterization of displaced material will be determined based on the origin of the material and potential disposition locations.	Section 3.3 Contamination Assessment states that "the specific analytes and interim screening levels applicable for characterization of displaced material will be determined based on the origin of the material and potential disposition locations." This statement appears to suggest that the interim soil screening levels that are provided in Tables 1 and 2 are not to be consistently applied to all displaced soils but rather the origin and fate of the displaced soil will dictate which analyte will be evaluated and what interim threshold value is used. This is unclear and could use additional clarification.	The screening levels included on Tables 1 and 2 will be applied uniformly to all analytes included on the table. To clarify, the text "**and screening levels**" will be deleted from the statement. Regarding specific analytes, the protocol provides flexibility such that a subset of analytes included on Table 1 may be used to characterize displaced material, as determined appropriate. For example, material that is generated from an area not suspected of dioxin/furan contamination may not need to be characterized for dioxin/furan concentrations prior determining the appropriate disposition alternative.	
28	3		Hualapai / TRC		Interim screening values should not be based on background values. The use of background is unnecessarily over-conservative, the background data are based on a small yet variable group of samples, and use of the background threshold value will inevitably result in long term stockpiling of soils with no associated risk. Until a Tribal Screening level is developed it can still be safely assumed that the use of a CHHSL interim screening value will be equal to or greater than the Tribal Screening level and should be used in place of the background screening level.	The use of background is purposefully conservative until project-specific cleanup goals are established. While it is correct that this may result in long term storage of soils that are later determined to have no associated risk, agency input and concurrence is required if less conservative values are to be used.	
29	4		Hualapai / TRC		The use of ecological screening values (ECVs) should only occur in situations were displaced soils would be returned to surface locations. Most of the developed ECVs were developed based on exposures to terrestrial receptors which would not come into contact with subsurface soils. Clearly no significant pathway of exposure for ecological receptors exists for soils removed and replaced into deep boreholes. Therefore if ECVs are to be used it is suggested that there use be limited to the screening of only surface related soils.	See response to comment 24 (FMIT) and 28 (Hualapai/TRC).	

Absolute Comment No.	Agency Comment No.	Comment Location (Page)	Commenter	Reference Text	Comment	PG&E Response and/or Proposed Edits	Comment Status
30	5		Hualapai / TRC		It was clearly stated in the Technical Memorandum 3: Ecological Comparison Values for Metals and Polycyclic Aromatic Hydrocarbons in Soil that "the ECVs, while based on information developed during the ecological risk assessment (ERA) scoping, are to be applied only to soil investigation planning in conjunction with background values. Specifically, the ECVs are not intended for use as either cleanup goals or as screening levels to eliminate COPECs." Furthermore within the Revised Addendum to the Revised Human Health and Ecological Risk Assessment Work Plan (August 2008) PG&E states that "ECVs were developed to support the soil investigation data gaps assessment". Therefore it appears that the use of ECVs as interim screening levels for the determination of soil cleanup is outside of the scope of which these values were developed.	ECVs are only included on Table 1 for select analytes as the Interim Screening Level (see notes). However, the Interim Screening Level is not used for the determination of soil clean-up. The Interim Screening Level is used as the most conservative screening level to determine if the material is suitable for on-site return, reuse, and/or restoration alternatives. As presented on Figure 1, if the material contains contaminant concentrations greater than the Interim Screening Level (and below hazardous waste criteria), then it must stored until project-specific clean-up goals are established.	
31	6		Hualapai / TRC		There may be a need for rapid field analyses in order to, for example, place cuttings materials back down a bore hole or to work in very sensitive areas. Selected elements and possible field methods need to be discussed as part of the process to define screening levels.	It is conceivable that rapid field screening or laboratory analytical data may be necessary to make expeditious decisions related to the characterization of displaced material. However, these operational details are deferred to the project-specific work plan, where all details related to the implementation of the scope of work can be fully considered. The reference list of potentially applicable analytes and associated screening levels (Table 1) is being developed based on past operation information available for the Site, and therefore, is inclusive of all analytes of potential concern. However, this list is not dependant on the types of analytical methods (field or fixed-base laboratory) used for characterization of displaced site material.	
32	7		Hualapai / TRC		Other details were not presented in the report. For example, composite samples may be collected and analyzed in order to categorize a batch of soils. A displaced material tracking data base may be necessary in order to catalog the site locations, depths, methods of displacement, etc.	Many operational details, such as the method(s) for characterizing soils that are displaced as a result of Topock Remediation Project activities, are deferred to the project-specific work plan. See also the response to comment 22 (FMIT). Please refer to Section 3.2 (Handling and Short-term Storage) regarding plans to build an inventory of all material displaced by Topock Remediation Project activities.	

HARGIS + ASSOCIATES, INC.
HYDROGEOLOGY • ENGINEERING

1820 East River Road, Suite 220
Tucson, AZ 85718
Phone: 520.881.7300
Fax: 520.529.2141

September 7, 2012

VIA ELECTRONIC MAIL

Mr. Jose Marcos, Geologist
DEPARTMENT OF TOXIC SUBSTANCES CONTROL
5796 Corporate Avenue
Cypress, CA 90630

Re: FMIT Comments on Revised Protocol on Displaced Materials, August 28, 2012

Dear Mr. Marcos:

Hargis + Associates, Inc. (H+A) on behalf of our client, the Fort Mojave Indian Tribe ("the Tribe" or "FMIT"), is hereby providing comments on the above-referenced revision to the Displaced Materials Protocol ("the Protocol"), in response to your email of September 4, 2012.

The Tribe is concerned over the suggestion that this Protocol is nearing finalization, yet there does not appear to be full resolution of Tribal comments. The Tribe agrees that this document has been prepared in a collaborative manner with frequent opportunity to exchange ideas and for the parties to provide input. Nevertheless, our review of the "Response to Comments," (RTC) prepared by the Pacific Gas & Electric Company (PG&E), characterizes the status of various tribal comments as "resolved." However, some of the issues that have been consistently raised by the Tribe during the process in fact remain unresolved. As you know from the correspondence of July 23, 2012, referenced below, the Tribe has concerns with the comment resolution process for the project in general.

The Tribe commented previously on the RTC process for the draft *Soil RCRA Facility Investigation/Remedial Investigation Work Plan (Work Plan), PG&E Topock Compressor Station, Needles, California.* Specifically, the last column of the RTC table identifies the resolution status of individual "Absolute Comments," much like the last column in PG&E's RTC for the displaced soils protocol. The Tribe took issue with the fact that the Agencies, the California Department of Toxic Substances Control (DTSC) and U.S. Department of the Interior (DOI), characterized the resolution status as "resolved," when in fact the Tribe had certain residual issues.

While the Tribe understands that the ultimate decisions for project matters remain the Agencies' responsibility, it is important that dissenting views of Tribes and stakeholders be documented in the record whenever the "resolution" overrides the concerns expressed throughout the process. On August 31, 2012, the Tribe received a letter from DOI and DTSC in response to the Tribe's letter of July 23, 2012, expressing concerns over the RTC process. The Agencies' letter recognized that several of the Tribe's issues in fact remain unresolved and indicated that DOI would request that PG&E remove the "resolved" notation from all Tribal comments. DOI further

indicated its willingness to consult with the Tribe on the matter and procedure for issue resolution.

The RTC for the displaced soils protocol is unacceptable to the Tribe for the same reasons: the document seems to state that PG&E, not the Agencies, had made determinations in regard to issue resolution. This function properly belongs to the Agencies and must not be directly or indirectly delegated to a third party. Also, the document does not accurately reflect unresolved issues raised by the Tribe or document why they cannot be accommodated, if that is the case, a key part of meaningful collaboration and consultation. Perhaps finalization of the Protocol can await the Agencies' consideration of this letter and the conclusion any further discussions on this subject with the Tribes.

Accordingly, below, the Tribe hereby is identifying three items where the Tribal issues remain unresolved, and requests that either these issues be resolved jointly with the Tribe(s) or the reasons why these issues cannot be accommodated at this time be identified and documented within the RTC summary. The comments are attached.

Please contact me if you have questions concerning this letter.

Sincerely,

HARGIS + ASSOCIATES, INC.

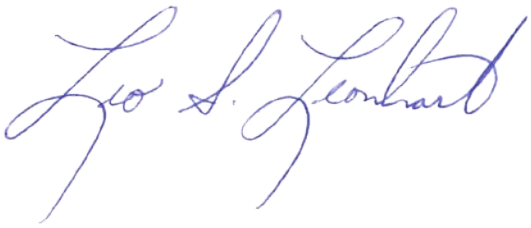

Leo S. Leonhart, PhD, PG, CHG
Principal Hydrogeologist

Comments attached below

cc: K. Baker, DTSC
J. Bathke, Quechan
D. Bonamici, CRIT
M. Cavaliere, CH2M Hill
C. Coyle
M. Eggers, TRC
R. Escobar, Chemehuevi
W. Fisher-Holt, CRIT

D. Hubbs, Hualapai
P. Innis, DOI
L. Jackson-Kelly, Hualapai
J. McCormick, Cocopah
S. McDonald
N. McDowell-Antone, FMIT
Y. Meeks, PG&E
K. Morton, Cocopah
L. Otero, FMIT
R. Prucha, TRC
E. Rosenblum, TRC
C. Schlinger, TRC
M. Sullivan, CSUN
T. Williams, FMIT
W. Wright, TRC
A. Yue, DTSC

839.07 Displaced Materials

Fort Mojave Indian Tribe Comments on the Draft Soils Reuse Protocol that Remain Unresolved

Comments on the RTC

1. Comment 20 by FMIT.

   There are two separate issues that have been inappropriately combined. The first issue is the Tribe's position that this Protocol should apply to all aspects (*e.g.,* groundwater and soil) of the Topock Remediation Project. The second issue was the request by the Tribe that the Protocol be applied to all soil-related projects. This second issue was potentially addressed by moving it to discussions between PG&E and the Tribes directly. However, this resolution does not address the first issue. Therefore, the Tribe again requests that this Protocol be applied to all aspects of the Topock Remediation Project.

2. Comment 24 by FMIT and 29 by Hualapai/TRC.

   The comment and the comment's final sentence are two separate, but related issues regarding the application of the soil criteria to decide on the disposition of disturbed soils. One issue is that it should be the final location of disturbed soil replacement that determines the applicable criteria, not the source location of the disturbed soil. And second, when the final location of disturbed soil replacement is selected, if the location has deep (*i.e.,* below 2 feet bgs) backfill areas, and if future erosion is unlikely, then this deeper backfill soil may have less stringent acceptance criteria. While it is understood that the Protocol has criteria that are not depth-related, this issue of backfill depth can be used to decrease the amount of soil that must be removed from the site, thereby lessening the impact of the cleanup on the Site.

Comments on the August 30, 2012, Draft Protocol

1. Page 5, paragraph 6.

   FMIT has commented previously that when the Protocol describes a simple comparison between the material *(i.e.,* the disturbed soil) and the criteria, without further discussion, it gives the impression that concentration-by-concentration comparisons will be used. As discussed in the last teleconference, there may be other estimates of 'material concentration' that could be used (*e.g.,* average). While the RTC specifies that the procedure for this comparison will be addressed in specific work plans, the Tribe requests that this paragraph be edited to include the statement "material concentrations will be established for each soil pile in short-term storage. This concentration may include a statistical estimate for that soil pile." (Note: 'pile' may not be the correct word in this context and a substitute can be discussed.)

Department of Toxic Substances Control

Deborah O. Raphael, Director
5796 Corporate Avenue
Cypress, California 90630

Matthew Rodriquez
Secretary for
Environmental Protection

Edmund G. Brown Jr.
Governor

Sent Via Electronic Mail

September 18, 2012

Leo S. Leonhart, PhD, PG, CHG
Principal Hydrogeologist
Hargis + Associates, Inc.
1820 East River Road, Suite 220
Tucson, AZ 85718

RESPONSE TO SEPTEMBER 7, 2012 LETTER ON FMIT COMMENTS REGARDING REVISED PROTOCOL ON DISPLACED MATERIALS, PACIFIC GAS AND ELECTRIC COMPANY (PG&E), TOPOCK COMPRESSOR STATION, NEEDLES, CALIFORNIA

Dear Dr. Leonhart:

The Department of Toxic Substances Control (DTSC) is in receipt of your letter dated September 7, 2012, which was sent on behalf of the Fort Mojave Indian Tribe (FMIT) pertaining to the FMIT concerns over the *"Management Protocol for Handling and Disposition of Displaced Site Material, Topock Remediation Project"* (Protocol). DTSC appreciates the FMIT's input as provided in your letter, and believes that they will help greatly in quickly resolving any potentially unresolved issues related to the Protocol.

As you know, it has been nearly one year since your initial draft of what has evolved into the current version of the Protocol. Its development has been a collaborative effort between the various agencies, Tribes, stakeholders and PG&E as part of the displaced soil committee. The parties involved have met multiple times to discuss the details of the document and its implementation strategy. DTSC believes that these meetings throughout the past year demonstrate the commitment of all parties to completing this task and to provide meaningful input into its development.

After reviewing the August 28, 2012 version of the Protocol, DTSC believes that the document has captured the issues and the resolutions suggested during the yearlong dialogues of the committee. However, in your letter, you expressed, on behalf of the FMIT, concern over DTSC's suggestion that the Protocol is nearing completion, and your letter indicates that the response to comments (RTC) summary table does not accurately reflect unresolved issues raised by the Tribes. You specified three

Printed on Recycled Paper

comments that the FMIT believes remain unresolved and you requested that these issues be resolved jointly with the Tribes or document the reasons why they cannot be accommodated at this time in the RTC summary table.

DTSC notes, however, that the 'resolved' status for comments listed on the RTC table were determined by the committee members during the various meetings after each comment was discussed. Never the less, DTSC will request PG&E to revise the RTC summary table for those three comments to reflect the FMIT's position. DTSC is providing the following discussion to clarify our understanding of the issues raised by the three specific comments. DTSC hopes that the responses adequately address the FMIT's comments so that the Protocol can continue to move forward.

1. Absolute Comment No. 20 by FMIT – According to the FMIT comment, the Protocol does not address soil disturbances associated with the soils investigation, and it appears that only soils displaced as a result of the groundwater remedy activities are explicitly covered. The FMIT requests that the protocol to be applied to all aspects (e.g., groundwater and soil) of the Topock Remediation Project.

As indicated in the first paragraph of the Protocol, *"This document presents the general approach and management protocol required for the handling and disposition of soil and/or rock (referred to as "material" throughout the document) that is displaced as a result of past (as practical), present, and future activities associated with the Pacific Gas and Electric Company (PG&E) Topock Remediation Project, Needles, California. Specifically, this includes material removed from the Earth (i.e., displaced) as a result of drilling, excavation, sampling, testing, construction, grading, and other remedial activities".* As cited, DTSC does not interpret the Protocol to be limited only to soil displaced as a result of groundwater remedy implementation. On the contrary, the scope appears to be sufficiently broad to cover all aspects of the environmental project conducted under the oversight of DTSC and the US Department of the Interior. DTSC is aware, however, that this protocol, once developed, could be submitted by PG&E to comply with a portion of Mitigation Measure CUL-1a-8 of the certified Final Environmental Impact Report where PG&E is to develop a protocol for handling soil cuttings to be included in the Cultural Impact Mitigation Program as part of the final design of the approved groundwater remedy.

Currently, DTSC is in the process of conducting a California Environmental Quality Act (CEQA) evaluation for the soil investigation work plan. Based on the results of the soil CEQA evaluation, the same mitigation measure may be found to be appropriate for the soil investigation activities. Note that displaced soils from soil investigation activities will not be generated until after the soil CEQA evaluation is completed and the soil investigation work plan is approved. DTSC will instruct PG&E to add a statement in the RTC summary table reflecting DTSC's position.

2. Absolute Comments No. 24 by FMIT and 29 by Hualapai/TRC – The Tribes request that the depth of the soil placement/reuse should be considered in the decision for reuse.

DTSC supports PG&E's response in the RTC summary table that separation of displaced soil to this level of detail (shallow vs. deep) greatly increases the level of complexity related to soil testing and management scenarios and could result in a larger storage footprint. The current return, reuse, and/or restoration scenarios are not depth-specific, and deeper reuse scenarios may be limited. Variables like future erosion or change in regulations also complicate two-tier reuse scenarios.

More importantly, the decision to reuse soil that is above screening criteria regardless of depth ultimately rests on the respective land owners who own the land where the displaced soil will be reused. If potentially contaminated soils will be reused, the land owner must agree to a land use covenant restricting the use of their land after backfilling. DTSC believes that this issue cannot be managed at a global level since the decision is dependent on location, depth, concentration of material and landowner acceptance, DTSC believes that this issue can be deferred and handled on a case-by-case basis, potentially during the individual work plan, to first determine if there are potential locations that will require deep backfill, and more importantly, the individual land-owners preference on this issue. DTSC will instruct PG&E to revise the RTC summary table to remove the 'resolved' status for this comment, incorporate DTSC's position, and indicate that additional detail can be included in the individual work plans.

3. FMIT Comment on page 5, paragraph 6 of the August 2012 draft protocol – The FMIT requests the inclusion of the statement, *"material concentrations will be established for each soil pile in short-term storage. This concentration may include a statistical estimate of the soil pile"*. In addition to potential concentration-by-concentration comparison between the disturbed soil and screening criteria, DTSC does not object to considering other alternative methods as long as the methods will yield data that are representative of the material in question, are in accordance with waste classification regulations, and standard practice for classifying materials such as investigation derived soil cuttings for the purposes of determining proper disposal. DTSC concurs with the approach that additional details regarding this issue can be addressed in the individual work plans. DTSC will instruct PG&E to update the Protocol and RTC summary table to incorporate the FMIT's proposed concept as a potential alternative.

Finally, your letter indicated that the FMIT has concerns with the comment resolution process for the project in general. The FMIT expressed similar concerns in a letter dated July 23, 2012. DTSC and the U.S. Department of the Interior provided a response to the FMIT letter on August 31, 2012. If you feel that this letter and the August 31, 2012 letter do not adequately address your general concerns regarding the comment resolution process for the project, we would like to meet with you to discuss any remaining concerns you may have.

DTSC hopes that this letter provided additional clarification and adequately addressed the FMIT's issues related to the Protocol. As always, DTSC appreciates the Tribes and stakeholders continuing involvement on the PG&E Topock project and we look forward to working with you in moving the overall project forward. If you have any questions, please feel free to contact me at (714) 484-5492.

Sincerely,



Jose Marcos, PG
Engineering Geologist
Department of Toxic Substances Control

cc: Ms. Karen Baker, DTSC
Mr. John Bathke, Quechan
Mr. Douglas Bonamici, CRIT
Mr. Mike Cavaliere, CH2MHill for PG&E
Ms. Courtney Ann Coyle, for FMIT
Ms. Margaret Eggers, TRC
Mr. Ron Escobar, Chemehuevi
Ms. Wilene Fisher-Holt, CRIT
Mr. Christopher Guerre, DTSC
Ms. Dawn Hubbs, Hualapai
Ms. Pamela Innis, DOI
Ms. Loretta Jackson-Kelly, Hualapai
Ms. Jill McCormick, Cocopah
Mr. Steven McDonald, for FMIT
Ms. Nora McDowell-Antone, FMIT
Ms. Yvonne Meeks, PG&E
Ms. Kendra Morton, Cocopah
Ms. Linda Otero, FMIT
Mr. Robert Prucha, TRC
Mr. Eric Rosenblum, TRC
Mr. Charlie Schlinger, TRC
Mr. Michael Sullivan, for FMIT
Mr. Timothy Williams, FMIT
Mr. Win Wright, TRC
Mr. Aaron Yue, DTSC

Response to DOI Comment #803 on the 90% Design
Topock Groundwater Remediation Project
PG&E Topock Compressor Station, Needles, California

Comment No.	Unique Comment ID (if applicable)*	Comment Type (Design/ Non-Design)	Comment Category	Section/ Page	Reference Text	90% Design Comment *(Please provide sufficient detail, include specifically what you are looking for)*	PG&E Response	DTSC Response	DOI Response	Tribes Response	Final Resolution
803	DOI-333	Design	Infrastructures	2.1.3/2-6	The soil storage area, also comprising approximately 1.55 acres, will serve as the primary storage area for excavated soils…	Based on discussions with San Bernardino County, the adjacent lessee of Park Moabi Regional Park, and internal discussions between the Bureau of Land Management and the Department of the Interior, PG&E must find an alternate location for storage of waste soil above screening levels.	Based on further clarifications from DOI and BLM, PG&E understands that storage of waste soil above screening levels will not be allowed on federal lands. The remaining potential storage locations are private properties owned by FMIT and PG&E. Given the remedy facilities already planned to be located on the TCS and the Station's own operational needs for the property for its natural gas compressor operations, there is only space on PG&E property to temporarily store soil bins while awaiting analysis prior to final disposition. There is not adequate space on PG&E property to store waste soil on a long term basis. PG&E also contacted local TSDFs and was told that the TSDFs would accept the waste soil for disposal, not for storage. Given the above, at this time, PG&E has not been able to identify an alternate location for storing the waste soil. PG&E defers to the FMIT regarding its views on potential use of the Tribe's property within the project area for this purpose. In the meantime, in response to this comment, PG&E will eliminate the proposed soil storage area at Moabi Regional Park and move the proposed CHQ into that area. Note that displaced soils that are below screening levels may still be stored at the currently proposed soil processing area and the CHQ (subject to space availability). The management protocol for handling and disposition of displaced site materials (Appendix C to the CIMP, Appendix B to the Soil Management Plan) was revised to reflect that the materials above screening levels will be disposed of offsite. The revised protocol was provided in this 90% RTC period and included in **Attachment Q** of the final RTC table.		Resolved.		This RTC was discussed at the July 23, August 19, and August 26 TWG meetings. Comment resolved.

Source: Final Basis of Design Report (Appendix I – Response to Comments on the 90% Design Documents [Basis of Design Report, O&M Manual, Construction/Remedial Action Work Plan]).

Appendix C
Construction and Operations Best Management Practices (BMPs) Plan for Soil Storage

Construction and Operations Best Management Practices (BMPs) Plan for Soil Storage

This Best Management Practices (BMPs) Plan for soil storage during construction and operations of the final groundwater remedy at the Pacific Gas and Electric Company (PG&E) Topock Compressor Station has been prepared as required by the following Environmental Impact Report (EIR)[1] mitigation measures and Applicable or Relevant and Appropriate Requirements (ARARs):

- Mitigation measure AIR-1 requires the implementation of fugitive dust control measures during construction activities.
- Mitigation measure HYDRO-1 requires the implementation of BMPs to meet the substantive criteria of applicable federal, state, and local permit and regulatory requirements for stormwater discharges associated with construction and land disturbance activities.
- ARAR #34 requires the implementation of BMPs for stormwater runoff which comes in contact with construction activities (>1 acre of ground disturbance).

This BMPs Plan has been prepared to meet the above requirements, and in accordance with the substantive criteria of the NPDES General Permit for Stormwater Discharges Associated with Construction and Land Disturbance Activities Order No. 2009-0009-DWQ, Amended Order No. 2010-014-DWQ, Amended Order No. 2012-0006-DWQ, NPDES No. CAS000002 (California General Permit)[2] for construction activities in San Bernardino County, California, as well as the substantive criteria of the Arizona Pollutant Discharge Elimination System (AZPDES) General Permit AZG2013-001 for Stormwater Discharges associated with Construction Activity to Waters of the United States (General Permit) for construction activities in Mojave County, Arizona.

This BMPs Plan has been prepared by a California Qualified SWPPP Developer (QSD) and will be implemented under the direction of a Qualified SWPPP Practitioner (QSP). A summary of key BMPs identified for soil storage of the project is presented below in Section 1.0; inspection, monitoring, corrective actions, reporting, and recordkeeping information for the BMPs Plan is presented in Section 2.0; and workers training and education in Section 3.0.

The PG&E Topock Site Operations Manager and the Field Team Leader will have control over day-to-day activities, and will implement this BMP Plan under the direction of the QSP (see Section 2.2 for additional details on the BMPs Project Team).

1.0 Project BMPs

This section provides a summary of the Project BMPs. The specific EIR mitigation measures other than HYDRO-1 or project SOPs are referenced for each BMP category where appropriate. Figure C-1 at the end of this appendix shows the site topography and inferred surface water flow for the soil storage area located at Moabi Regional Park. It should be noted that during construction, temporary storage (or staging) of displaced soils will also occur in staging areas near the primary work zones (i.e., construction zones).

1.1 Erosion Control BMPs

Scheduling – In order to reduce the amount and duration of soil exposed by construction activities, a schedule will be established to coordinate construction activities and construction site BMPs while taking local climate into

[1] California Department of Toxic Substances Control (DTSC). 2011. *Final Environmental Impact Report for the Topock Compressor Station Groundwater Remediation Project*. January.

[2] State Water Resources Control Board (SWRCB). 2009. Construction General Permit Fact Sheet. Adopted Order No. 2009-0009-DWQ. Sacramento, CA.

consideration. Construction site BMPs will be installed prior to start of construction and inspected prior to and after anticipated rain or erosion events. Sufficient lag time will be built into the schedule to allow for rain delays.

Preservation of Existing Vegetation – Existing vegetation will be preserved whenever feasible. Preservation of existing vegetation will be incorporated into the schedule prior to the commencement of clearing and grubbing or other soil disturbing activities. In the event that existing vegetation needs to be disturbed, areas that need to be preserved will be identified by a qualified biologist and marked with temporary fencing. All employees and subcontractors will be informed on the limits of disturbance within the construction site and will be instructed to keep clear of delineated areas.

Geotextiles and Mats – A natural (excelsior, straw, coconut, etc.) or synthetic (usually polyethylene) material will be used to reduce soil erosion by wind or water. Stockpiles will be covered and secured.

1.2 Sediment Control BMPs

Silt Fence – Silt fences will be placed below areas where sheet flows discharge from the site. They will also be used as interior controls below disturbed areas where runoff may occur in the form of sheet and rill erosion and around inlets within disturbed areas. Silt fences are most effective when used in combination with erosion controls around temporary spoil areas and stockpiles, and below other small cleared areas.

Fiber Rolls/Sediment Wattles – These consist of aspen wood excelsior, straw, flax, or other similar materials that are rolled and bound into tight tubular rolls and placed on the face of slopes at regular intervals depending on steepness of slopes to intercept runoff and reduce flow velocity. Rolls/wattles will be installed prior to start of construction activities to form a barrier around work areas and stockpiles and will be anchored down with stakes. If the stockpiles are on paved areas, gravel or sand bags are preferred; however, fiber rolls can be used and secured with gravel or sand bags. The fiber rolls/sediment wattles will be inspected prior to forecasted rain events and after rain events to ensure the fiber rolls are working properly. Sediment accumulated by the fiber rolls will be removed periodically to maintain the effectiveness of the fiber rolls.

Gravel Bag Berms – Gravel bag berms can be used as an alternative to fiber rolls and sediment wattles. If used, they will be installed prior to rain events to form a barrier to intercept runoff or reduce its velocity. Gravel bags will also be used, if necessary, during trenching activities when stockpiles are onsite. In the event that gravel bag berms are used as perimeter erosion control, the bags will be placed two bags high. When used to anchor stockpiles, they will be placed one bag high.

Sand Bag Berms – Sand bag berms can also be used as an alternative to fiber rolls and sediment wattles. If used, they will be installed prior to rain events to form a barrier to intercept runoff or reduce its velocity. The purpose is to allow sediment to settle from runoff before water leaves the construction site. Sand bags will also be used, if necessary, during trenching activities when stockpiles are left onsite.

Straw Bale Barriers – Straw bale barriers can also be used as an alternative to fiber rolls, gravel bag berms, and sand bag berms. Straw bale barriers intercept and slow down sheet flow runoff, causing temporary ponding. The temporary ponding provides quiescent conditions allowing sediment to settle. Straw bale barriers also interrupt the slope length and thereby reduce erosion by reducing the tendency of sheet flows to concentrate into rivulets, which erode rills, and ultimately gullies, into disturbed, sloped soils. Straw bale barriers will be placed one bag high.

1.3 Stockpile Management Control BMPs

Stockpile management procedures and practices are implemented to reduce or eliminate pollution to the air and stormwater from materials that are stockpiled. Stockpile protection is required year-round. Any stockpiles will be stored in the staging area and outside of the roadway right-of-way. Stockpiles will be located a minimum of 50 feet away from any concentrated flow of stormwater, drainage courses, and inlets. During the rainy season, stockpiles will be covered and anchored down with fiber rolls/sediment wattles, silt fences, gravel bags, sand bags, and/or straw bales. Additional stockpile management BMPs are presented in the subsections below.

Non-RCRA Hazardous Soil. It is anticipated that non-RCRA hazardous soil will be placed in roll-off bins or similar containers. If it is necessary to temporarily stockpile non-RCRA hazardous soil the following BMPs will be followed:

- Stockpiles will be constructed with liners and perimeter berms to prevent release or infiltration of liquids. Minimum 20-mil polyethylene sheeting or equivalent will be used for liners if the stockpile is on a foundation, or minimum 60-mil polyethylene sheeting or equivalent will be used if the stockpile is not on a foundation.
- Wind erosion will be prevented by use of a cover, applying Soiltac® or a similar soil stabilization product, or other suitable means. If a cover is employed it will be minimum 6-mil polyethylene sheeting or equivalent.
- The perimeter berm will be constructed of clean materials (such as hay bales or straw wattle under the liner).
- If a cover is employed, it will extend over the outer edges of the perimeter berm and liner so that rainfall is prevented from entering the stockpile.
- Covers and perimeter berms will be secured in place when not in use and at the end of each workday and as necessary to prevent wind dispersion or runoff from precipitation events.
- Only soil that does not contain free liquids will be stockpiled.
- Liquids that accumulate inside the berm will be pumped from the stockpile to a container or tank for characterization and disposal.
- If the stockpile is outside of a secured area, the stockpile will be demarcated with barricades, orange cones, and/or caution tape until it is removed from the site.
- Erosion control measures will be employed to prevent stockpiled soil from contributing to surface runoff and wind-generated particulate matter.
- The stockpile will be inspected weekly and after storms to verify that controls for windblown dispersion and prevention of runoff and run-on are functioning properly.
- After the stockpile has been removed, the area will be inspected and all residual material will be removed from the underlying and surrounding areas.

The stockpile location will be certified by a California-registered professional engineer for compliance with these requirements, consistent with California Health and Safety Code Section 25123.3(b)(4)(B).

Non-Hazardous Soil Above Interim Screening Levels or Project-Specific Cleanup Goals (once established). It is anticipated that all soil that is above soil screening levels or project-specific cleanup goals will not be stockpiled and will be placed in roll-off bins or similar containers. If it is necessary to temporarily stockpile displaced soil that is non-hazardous, but unsuitable for final disposition onsite because contaminants are present above the interim screening level, the following BMPs will be followed:

- Stockpiles will be constructed with liners and perimeter berms to prevent release or infiltration of liquids. Minimum 20-mil polyethylene sheeting or equivalent will be used for liners.
- Wind erosion will be prevented by use of a cover, applying Soiltac® or a similar soil stabilization product, or other suitable means. If a cover is employed it will be minimum 6-mil polyethylene sheeting or equivalent.
- The perimeter berm will be constructed of clean materials (such as hay bales or straw wattle under the liner).
- If a cover is employed, it will extend over the outer edges of the perimeter berm and liner so that rainfall is prevented from entering the stockpile.
- Covers and perimeter berms will be secured in place when not in use and at the end of each workday and as necessary to prevent wind dispersion or run-off from precipitation events.
- Liquids that accumulate inside the berm will be pumped from the stockpile to a container or tank for characterization and disposal.

- If the stockpile is outside of a secured area, the stockpile will be demarcated with barricades, orange cones, and/or caution tape until it is removed from the site.
- Erosion control measures will be employed to prevent stockpiled soil from contributing to surface runoff and wind-generated particulate matter.
- After the final volume of stockpiled soil has been removed, the area will be inspected for visual contamination due to stockpiling activities, and any remaining residual contaminated material will be removed.

Clean Soil. Stockpiles of displaced soil outside of Soil RFI/RI Investigation Areas that is non-hazardous, clean, and suitable for immediate reuse will be stored following these BMPs:

- Stockpiles will be constructed with liner and perimeter berm to prevent release or infiltration of liquids. Minimum 20-mil polyethylene sheeting or equivalent will be used for liners.
- Wind erosion will be prevented by use of a cover, applying Soiltac® or a similar soil stabilization product, or other suitable means. If a cover is employed it will be minimum 6-mil polyethylene sheeting or equivalent.
- The perimeter berm will be constructed of clean materials (such as hay bales or straw wattle under the liner).
- If a cover is employed, it will extend over the outer edges of the perimeter berm and liner so that rainfall is prevented from entering the stockpile.
- Covers and perimeter berms will be secured in place when not in use and at the end of each workday and as necessary to prevent wind dispersion or run-off from precipitation events.
- If the stockpile is outside of a secured area, the stockpile will be demarcated with barricades, orange cones, and/or caution tape until it is removed from the site.
- Erosion control measures will be employed to prevent stockpiled soil from contributing to surface runoff and wind-generated particulate matter.
- After the stockpile has been removed, all residual material will be removed from the underlying and surrounding areas.

1.4 Wind Erosion Control BMPs

To comply with EIR Mitigation Measures AIR-1a, AIR-1b, AIR-1c, and AIR-1e, wind erosion control will be applied as necessary to prevent nuisance dust and minimize the movement of sediment disturbed during construction. Specifically, the project site will be watered periodically with a water truck for short-term stabilization of disturbed surface areas to minimize visible fugitive dust emissions during dust episodes. A water truck also will be used to control dust on disturbed surfaces during visible dusting episodes. Loaded haul vehicles will be covered on publicly maintained roads. Graded sites will be stabilized using soil binders, as necessary, upon completion of grading when subsequent development is delayed or expected to be delayed more than 30 days, except when such delay is caused by precipitation that dampens the disturbed surface area sufficiently to eliminate visible fugitive dust emissions. Non-essential earth-moving activities will also be curtailed under high wind conditions (winds greater than 25 miles per hour).

1.5 Tracking Control BMPs

Stabilized Construction Entrance/Exit – A temporary construction entrance is defined as a stabilized point of entrance/exit to a construction site to reduce the tracking of mud and dirt onto private or public roads by construction vehicles. A temporary construction entrance will be established in the laydown area to minimize sediment tracking. The temporary construction entrance will be inspected routinely. To comply with EIR Mitigation Measure AIR-1d, project-related track out or spills on publicly maintained paved surfaces will be cleaned up within twenty-four hours.

1.6 Good Housekeeping BMPs

Good housekeeping measures are in addition to the above project-specific BMPs, and will be implemented onsite for the duration of the Project.

- Cover and berm loose stockpiled construction materials that are not actively being used.
- Contain and securely protect stockpiled waste materials from wind and rain at all times unless actively being used.

1.7 Drums/Small Containers

Drums containing soils which are hazardous waste will be stored in a hazardous waste storage area at the Compressor Station and/or the Transwestern Bench and disposed of within 90 days of generation. If needed, drums/small containers that contain soil that may be displaced in the vicinity of the groundwater remedy system that is non-hazardous, but unsuitable for final disposition onsite because contaminants are present above the interim screening level or project-specific cleanup goals, will be staged for offsite transportation following these BMPs:

- Only DOT-specification containers will be used for soil accumulation.
- Empty drums will be inspected and inventoried upon arrival onsite for signs of contamination and/or deterioration.
- Drums and small containers will be transported to the temporary accumulation areas on wood pallets and will be secured together with non-metallic banding.
- Drums will be placed within a bermed and lined area or otherwise will be provided with secondary containment.
- Adequate aisle space (e.g., 36 inches) will be provided for containers such as 55-gallon drums to allow the unobstructed movement of personnel and equipment for inspection purposes. Drums will be placed with no more than two drums per row. The column length must fit within the lined, bermed area.
- Each drum will be provided with its own label, and labels will be visible for inspection purposes.
- Drums will remain closed except when removing or adding soil to the drum. Closed means that the lid and securing ring must be on and securely tightened.

1.8 Roll-off Bins

- All empty roll-off bins will be inspected upon arrival onsite. Any roll-off containers arriving with contents, residual contamination, or deterioration will be rejected. Existing damage (dings, significant paint scratches, broken wheels, etc.), if not significant enough to result in rejection, will be documented upon arrival of the bin using photos and written documentation.
- Roll-off bins will be provided with covers and disposable liners.
- Covers will be properly secured, except when adding or removing soil.
- Old labels will be removed, and each bin will be provided with its own label. Labels will be visible.
- Roll-off bins containing soils that are hazardous waste will be stored in a hazardous waste storage area and disposed of within 90 days of generation.
- Roll-off bins containing clean soil can be stored anywhere on PG&E property or at other properties that have granted permission to PG&E.
- Roll-off bins that contain displaced soil that is non-hazardous, but unsuitable for final disposition onsite because contaminants are present above the interim screening level will be stored at designated locations. The bins will be covered and inspected at a specified frequency (see Section 2.0 for inspection frequencies).

2.0 Visual Inspection, Monitoring for Non-Visual Pollutants, Reporting, Training, and Recordkeeping

This section discusses visual inspections, monitoring for non-visual pollutants, reporting, workers training and education, and recordkeeping.

2.1 Visual Inspection after Qualifying Rain Event

In conformance with the substantive requirements of the Arizona General Permit (Order No. AZG2013-001) and California General Permit (Order No. 2009-0009-DWQ), visual inspections will be implemented to assess the effectiveness of BMPs related to soil storage, and to modify those BMPs, if necessary, to continue to reduce pollutants and impacts on receiving waters. Anticipated activities associated with the inspections include the following:

- Visually inspect BMPs and stormwater discharges at discharge locations within two business days (48 hours) after each qualifying rain event (producing precipitation of one-half inch or more of discharge). The objectives are to 1) identify whether BMPs were adequately designed, implemented, and effective, and 2) identify additional BMPs accordingly.
- Visually inspect the discharge of stored or contained storm water that is derived from and discharged subsequent to a qualifying rain event producing precipitation of ½ inch or more at the time of discharge. Stored or contained storm water that will likely discharge after operating hours due to anticipated precipitation will be observed prior to the discharge during operating hours.
- Record the time, date and rain gauge reading of all qualifying rain events.
- Implement corrective actions as appropriate.

Rain event inspections will occur during working hours when it is safe to do so. In the event of rain over a weekend or during a long holiday the inspection can occur prior to or after the weekend. If the inspection day falls on a Sunday, the inspection may be conducted on the following Monday.

Inspections are not required under adverse conditions. The QSP is not required to inspect areas that, at the time of inspection, are considered unsafe for inspection personnel. Inspections may be postponed when conditions exist such as local flooding, high winds, or electrical storms, or situations that otherwise make inspections unsafe. The inspection must resume as soon as conditions are safe. Results of the inspection and any corrective action perform will be documented and kept onsite. An example Inspection and Corrective Action Report Form, which may be used for both Arizona and California inspections and corrective actions is included in Attachment 1.

2.2 Visual Inspection for Non-Stormwater Discharge

In addition, quarterly visual inspections will be conducted for non-stormwater discharge. The objective is to inspect for the presence of (or indications of prior) unauthorized and authorized non-storm water discharges and their sources. Inspection records will include the personnel performing the visual observation (inspections), the dates and approximate time of the inspection, and the response taken to eliminate unauthorized non-storm water discharges and to reduce or prevent pollutants from contacting non-storm water discharges, if any.

2.3 Monitoring for Non-Visual Pollutants

Monitoring for non-visual pollutants will be conducted to determine whether pollutants that are known to occur on the soil storage sites and that cannot be visually observed or detected in storm water discharges, are being conveyed from the site by storm water.

The QSP will develop and implement the sampling and analysis requirements prior to the start of construction, to monitor for non-visual pollutants associated with soil storage activities. These requirements may be modified as needed to meet the monitoring objectives. Sampling and analysis is only required where the QSP believes pollutants associated with construction activities have the potential to be discharged with storm water runoff due to a spill or in the event there was a breach, malfunction, failure and/or leak of any BMP. If sampling is required as

determined by the QSP, samples will be collected down-gradient from potential discharge locations, in areas which can be safely accessed. In addition, a sample of stormwater that has not come into contact with the disturbed soil or the materials stored or used on-site (uncontaminated sample) will be collected for comparison with the discharge sample. These samples will be collected during the first two hours of discharge from rain events that occur during business and daylight hours and which generate runoff.

Samples will be analyzed for parameters indicating the presence of pollutants identified in the pollutant source assessment required in Section J.2.a.i. of the Construction General Permit (SWPPP Appendix A) which states:

> *"Identify the products used and/or expected to be used and the end products that are produced and/or expected to be produced. This does not include materials and equipment that are designed to be outdoors and exposed to environmental conditions (i.e. poles, equipment pads, cabinets, conductors, insulators, bricks, etc.)."*

2.4 Reporting

Annual reports include a summary and evaluation of all sampling and analysis results, original laboratory reports, and chain of custody forms, a summary of all corrective actions taken during the compliance year, and identification of any compliance activities or corrective actions that were not implemented. Annual reporting is a requirement of permitted SWPPP documents and reports are submitted electronically through SMARTs. Because this is not a permitted SWPPP, the annual reports will not be submitted through SMARTs. The annual reports will be submitted to DTSC (in compliance with mitigation measure HYDRO-1) and DOI.

2.5 Workers Training and Education

Prior to the beginning of construction, construction workers will be trained on the overall storm water management program and more specifically, on proper implementation of this BMPs plan. Persons directly responsible for compliance with the plan, such as inspectors, workers installing and maintaining the erosion control devices, and workers collecting stormwater samples, will receive additional training. New personnel that require stormwater management training after the start of construction will be provided training. Documentation of the training will be kept onsite.

In parallel, Operations staff will be trained on overall storm water management program and more specifically, on the proper implementation of this operations BMPs Plan for soil storage, as well as the Industrial SWPPP included as appendix to the O&M Plan (Volume 1 of the O&M Manual).

2.6 Record Keeping

The following records will be maintained onsite:

- This BMPs Plan and any updates necessary to reflect current conditions and to maintain accuracy.
- Copies of relevant documents that would affect the provisions or implementation of the BMPs Plan.
- Descriptions and dates of any incidences of significant spills, leaks, or other releases pertaining to soil storage that resulted in discharges of pollutants in stormwater to a regulated municipal separate stormwater systems or to waters of the U.S., the circumstances leading to the release and actions taken in response to the release and measures taken to prevent the recurrence of such releases.
- Documentation of maintenance, including repairs of structural control measures, including the date(s) of discovery of areas in need of repair/replacement, date(s) that the structural control measure(s) returned to full function, and the justification for any extended repair schedules. The maintenance records will include the date(s) of regular maintenance.
- BMP inspection reports and corrective action report forms (see Attachment 1 for an example of a corrective action report form which may be used for both California and Arizona).
- Annual reports.
- Training documentation.

2.7 BMPs Project Team

The BMPs Project Team members include:

- PG&E Site Operations Manager, Curt Russell
- PG&E Environmental Inspector, Chris Smith
- PG&E Construction Project Manager, Danielle Starring – Operational control over construction plans and specifications
- QSD, Gino Nguyen (CH2M HILL) – BMPs Plan development
- QSP, to be appointed – Operational control over construction plans and specifications
- Construction Contractors, to be appointed
- Field Team Leader, to be appointed – Responsible for day-to-day activities
- Field Operators, to be appointed – Responsible for day-to-day activities

The BMPs Project team as defined above represents the current project organization. PG&E may reorganize and/or assign other parties to these roles over the course of the construction and O&M of the groundwater remedy to ensure project success.

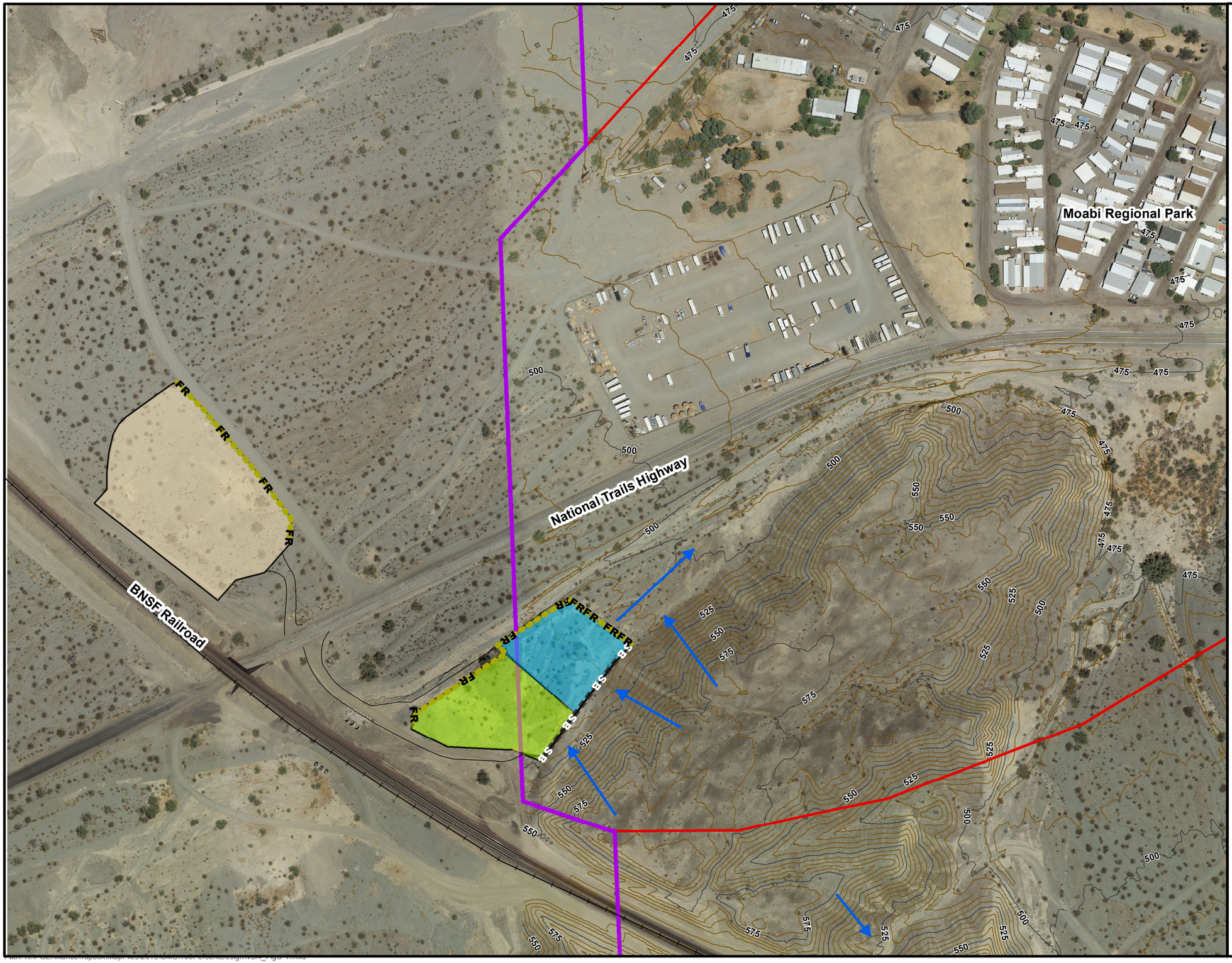

VICINITY MAP

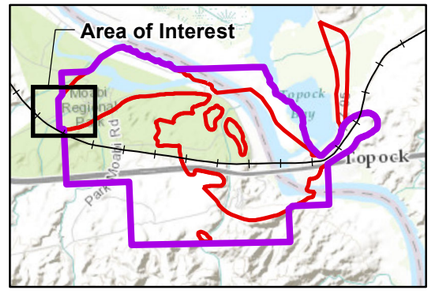

LEGEND

- Long-term Remedy Support Area (0.8 Acres Approximate)
- Soil Storage/Processing Area (2.56 Acres)
- Temporary Construction Laydown Area (1.05 Acres Approximate)
- Area of Potential Effects (APE)
- EIR Project Area
- Estimated Flow Direction
- Sand Bags (SB)
- Fiber rolls/sediment wattles/ straw bales/silt fence (FR)

Notes:

1. This is a conceptual layout. Locations are approximate. BMPs are not drawn to scale.
2. Descriptions of activities/functions anticipated for the construction support areas are included in the Construction/Remedial Action Work Plan.
3. Descriptions of activities/functions anticipated for the long-term remedy support areas are included in Section 3.5 of the BOD, and the O&M Manual.

N

0 90 180 360 Feet

FIGURE C-1
SOIL STORAGE AREAS AND PROPOSED BEST MANAGEMENT PRACTICES
CONSTRUCTION AND OPERATIONS
BEST MANAGEMENT PRACTICES
PLAN FOR SOIL STORAGE
PG&E TOPOCK COMPRESSOR STATION
NEEDLES, CALIFORNIA

CH2MHILL

Attachment 1
Inspection and Corrective Action Report Form

2013 Construction General Permit
Inspection & Corrective Action Report Form

ADEQ Arizona Department of Environmental Quality

Section I. General Information (see instructions)

Name of Project		CGP Tracking No.	AZCON – _____	Inspection Date	___ / ___ / _____

☐ **Check box when using this form to inspect an inactive/ unstaffed construction site (this option applies to an entire site only).** See Part 4.2(4) of the permit. Inspect the site immediately before becoming inactive/ unstaffed and every 6 months thereafter and within 24 hours of each storm event of 0.5 inch or greater in 24 hours.

Inspector Name, Title & Contact Information	**Name:** _____ **Title:** _____ **Contact information:** _____
Present Phase of Construction	

Inspection Schedule (all days are calendar days) *(Note: you may be subject to different inspection frequencies in different areas of the site. Check all that apply.)*

Routine Schedule: ☐ Every 7 days ☐ Every 14 days and within 24 hours of a 0.5" storm event

☐ Once per month, but not within 14 days of the previous inspection and within 24 hours of a 0.25" storm event

Reduced Schedule: once per month (but not within 14 days of the previous inspection) and before an anticipated storm event and within 24 hours of the end of each storm event of 0.5 inch or greater in 24 hours.

☐ Once per month (in stabilized areas)

☐ Once per month (where discharges are unlikely based on seasonal rainfall patterns)

☐ Once per month (where winter conditions exist and earth-disturbing activities are being conducted)

Discharge points within 1/4 mile of an impaired water or outstanding Arizona water (OAW): ☐ Every 7 days and within 24 hours of a 0.5" storm event

Was this inspection triggered by either a 0.25" or 0.5" storm event? ☐ Yes ☐ No

If yes, duration of storm event: ☐ < 1 hour ☐ < 6 hrs ☐ > 6 hrs

If yes, how was the storm event determined (either 0.25" or 0.5")?

☐ Rain gauge on site ☐ Weather station representative of site. Specify weather station source: _____

Total rainfall amount that triggered the inspection (in inches)**:** _____

Identify all sources of non-stormwater discharges occurring at the site and the associated control measures in place

sources of non-stormwater discharges:	control measures associated with the non-stormwater discharges:
1. _____	1. _____
2. _____	2. _____
3. _____	3. _____
4. _____	4. _____
5. _____	5. _____

Adverse or Unsafe Conditions for Inspection

Did you determine that any portion of the site was unsafe for inspection per CGP Part 4.2(6)? ☐ Yes ☐ No

If "yes", complete the following:

- Describe the conditions that prevented you from conducting the inspection in this location:

- Location(s) where conditions were found:

Note: *Inspections may be postponed when adverse or unsafe conditions exist such as local flooding, high winds, or electrical storms, or situations that otherwise make inspections unsafe. However, the inspection must resume as soon as conditions are safe.*

Section II. Description of Discharges and Condition of the Discharge Locations (CGP Part 4.3(11)) (see instructions)

Discharge Point	Observations *(Note: discharges may not occur at every discharge point on the site after a storm event. Check all that apply.)*
1.	Describe the discharge: ☐ Stormwater ☐ Non-stormwater ☐ None Since the last inspection, do you see any evidence of erosion, sediment accumulation and/ or other pollutants that can be attributed to your discharge? ☐ Yes ☐ No
If yes, describe the characteristics of the discharge (color, odor, clarity, etc.) specify the location(s) of these conditions, and indicate whether modification, maintenance, or corrective action is needed to correct the problem. Also, describe any visible signs of erosion or sediment accumulation.	
2.	Describe the discharge: ☐ Stormwater ☐ Non-stormwater ☐ None Since the last inspection, do you see any evidence of erosion, sediment accumulation and/ or other pollutants that can be attributed to your discharge? ☐ Yes ☐ No
If yes, describe the characteristics of the discharge (color, odor, clarity, etc.) specify the location(s) of these conditions, and indicate whether modification, maintenance, or corrective action is needed to correct the problem. Also, describe any visible signs of erosion or sediment accumulation.	
3.	Describe the discharge: ☐ Stormwater ☐ Non-stormwater ☐ None Since the last inspection, do you see any evidence of erosion, sediment accumulation and/ or other pollutants that can be attributed to your discharge? ☐ Yes ☐ No
If yes, describe the characteristics of the discharge (color, odor, clarity, etc.) specify the location(s) of these conditions, and indicate whether modification, maintenance, or corrective action is needed to correct the problem. Also, describe any visible signs of erosion or sediment accumulation.	

Section II. CONTINUATION SHEET FOR: Description of Discharges and Condition of the Discharge Locations [Print additional sheets as necessary]

Discharge Point	Observations *(Note: discharges may not occur at every discharge point on the site after a storm event. Check all that apply.)*
#___.	Describe the discharge: ☐ Stormwater ☐ Non-stormwater ☐ None Since the last inspection, do you see any evidence of erosion, sediment accumulation and/ or other pollutants that can be attributed to your discharge? ☐ Yes ☐ No
If yes, describe the characteristics of the discharge (color, odor, clarity, etc.) specify the location(s) of these conditions, and indicate whether modification, maintenance, or corrective action is needed to correct the problem. Also, describe any visible signs of erosion or sediment accumulation.	
#___.	Describe the discharge: ☐ Stormwater ☐ Non-stormwater ☐ None Since the last inspection, do you see any evidence of erosion, sediment accumulation and/ or other pollutants that can be attributed to your discharge? ☐ Yes ☐ No
If yes, describe the characteristics of the discharge (color, odor, clarity, etc.) specify the location(s) of these conditions, and indicate whether modification, maintenance, or corrective action is needed to correct the problem. Also, describe any visible signs of erosion or sediment accumulation.	
#___.	Describe the discharge: ☐ Stormwater ☐ Non-stormwater ☐ None Since the last inspection, do you see any evidence of erosion, sediment accumulation and/ or other pollutants that can be attributed to your discharge? ☐ Yes ☐ No
If yes, describe the characteristics of the discharge (color, odor, clarity, etc.) specify the location(s) of these conditions, and indicate whether modification, maintenance, or corrective action is needed to correct the problem. Also, describe any visible signs of erosion or sediment accumulation.	
#___.	Describe the discharge: ☐ Stormwater ☐ Non-stormwater ☐ None Since the last inspection, do you see any evidence of erosion, sediment accumulation and/ or other pollutants that can be attributed to your discharge? ☐ Yes ☐ No
If yes, describe the characteristics of the discharge (color, odor, clarity, etc.) specify the location(s) of these conditions, and indicate whether modification, maintenance, or corrective action is needed to correct the problem. Also, describe any visible signs of erosion or sediment accumulation.	

Section III. Condition and Effectiveness of All On-site Control Measures (Erosion and Sediment (E&S)), Stabilization and Pollution Prevention (P2) Practices (CGP Part 3.1.1 through 3.1.3) (see instructions)					
Description of Control Measures	**Type of Control Measure:** ▪ **Erosion and Sediment (E&S)** ▪ **Stabilization** ▪ **Pollution Prevention (P2)**	**Additional controls required?**	**Repairs or other maintenance needed?[1]**	**Corrective action required?[1, 2]** Date of discovery	**Specify stabilization method** (mulch, rock, planted vegetation, etc.)
1.	☐ E&S ☐ Stabilization ☐ P2	☐ Yes ☐ No	☐ Yes ☐ No	☐ Yes ☐ No ___ / ___ / _____	
Notes (e.g., provide details about needed additional control measures, maintenance performed, etc.)					
Description of Control Measures	**Type of Control Measure:** ▪ **Erosion and Sediment (E&S)** ▪ **Stabilization** ▪ **Pollution Prevention (P2)**	**Additional controls required?**	**Repairs or other maintenance needed?[1]**	**Corrective action required?[1, 2]** Date of discovery	**Specify stabilization method** (mulch, rock, planted vegetation, etc.)
2.	☐ E&S ☐ Stabilization ☐ P2	☐ Yes ☐ No	☐ Yes ☐ No	☐ Yes ☐ No ___ / ___ / _____	
Notes (e.g., provide details about needed additional control measures, maintenance performed, etc.)					

Note 1: The permit differentiates between conditions requiring repairs and maintenance, and those requiring corrective action. The permit requires maintenance in order to keep controls in effective operating condition and requires repairs if controls are not operating as intended. Corrective actions are triggered only for specific, more serious conditions, which include: 1) A necessary stormwater control was never installed, was installed incorrectly, or not in accordance with the requirements in Part 3.1 and/or Part 3.2; 2) One of the prohibited discharges in Part 1.4 is occurring or has occurred; or 3) ADEQ or USEPA determines that modifications to the control measures are necessary to meet the requirements of Part 3.

Note 2: If answering "Yes" (i.e., a site condition that meets one or more of the three criteria in Note 1 above requires a corrective action), you must complete Section IV (Corrective Action Report) below. See Part 5 of the permit for more information.

Section III. CONTINUATION SHEET FOR: Control Measure Condition and Effectiveness [Print additional sheets as necessary]

Description of Control Measures	Type of Control Measure: ▪ Erosion and Sediment (E&S) ▪ Stabilization ▪ Pollution Prevention (P2)	Additional controls required?	Repairs or other maintenance needed?[1]	Corrective action required?[1, 2] Date of discovery	Specify stabilization method (mulch, rock, planted vegetation, etc.)
#___.	☐ E&S ☐ Stabilization ☐ P2	☐ Yes ☐ No	☐ Yes ☐ No	☐ Yes ☐ No ___ / ___ / _____	
Notes (e.g., provide details about needed additional control measures, maintenance performed, etc.)					

Description of Control Measures	Type of Control Measure: ▪ Erosion and Sediment (E&S) ▪ Stabilization ▪ Pollution Prevention (P2)	Additional controls required?	Repairs or other maintenance needed?[1]	Corrective action required?[1, 2] Date of discovery	Specify stabilization method (mulch, rock, planted vegetation, etc.)
#___.	☐ E&S ☐ Stabilization ☐ P2	☐ Yes ☐ No	☐ Yes ☐ No	☐ Yes ☐ No ___ / ___ / _____	
Notes (e.g., provide details about needed additional control measures, maintenance performed, etc.)					

Note 1: The permit differentiates between conditions requiring repairs and maintenance, and those requiring corrective action. The permit requires maintenance in order to keep controls in effective operating condition and requires repairs if controls are not operating as intended. Corrective actions are triggered only for specific, more serious conditions, which include: 1) A necessary stormwater control was never installed, was installed incorrectly, or not in accordance with the requirements in Part 3.1 and/or Part 3.2; 2) One of the prohibited discharges in Part 1.4 is occurring or has occurred; or 3) ADEQ or USEPA determines that modifications to the control measures are necessary to meet the requirements of Part 3.

Note 2: If answering "Yes" (i.e., a site condition that meets one or more of the three criteria in Note 1 above requires a corrective action), you must complete Section IV (Corrective Action Report) below. See Part 5 of the permit for more information.

ADEQ Arizona Department of Environmental Quality

Section IV. Corrective Action Report Form

Section IV.A. – General Information

(Complete this section within 24 hours of discovering the condition that triggered corrective action)

Date/ Time Problem First Discovered	Date: ___ / ___ / _____ Time: _____ ___AM ___PM	Today's Date	___ / ___ / _____

Name and Contact Information of Individual Completing this Form

Name: _____

Contact information: _____

What site conditions triggered the requirement to conduct corrective action? *(Check the box that applies)*

- ☐ A necessary stormwater control was never installed, was installed incorrectly, or not in accordance with the requirements in Part 2 and/or 3
- ☐ A prohibited discharge described in Part 1.4 has occurred or is occurring
- ☐ ADEQ or USEPA has determined that modifications to the control measures are necessary to meet the requirements of Part 3.

Provide a description of the problem: (Provide description of the specific problem that triggered the need for corrective action, and the specific location where it was found. If you have already provided this explanation in an inspection report, you can refer to that report.)

Deadline for completing corrective action:

- ☐ Work will be completed no more than 7 calendar days after the date the problem was discovered (enter date): ____ / ____ / _____
- ☐ It is infeasible to complete work within the first 7 days, therefore, the work will be completed as soon as practicable following the 7th day (enter date): ____ / ____ / _____

If the estimated date of completion falls after the 7-day deadline, document the following: (1) The reason it is infeasible to complete work within 7 days, and (2) The schedule for installing and making the new or modified stormwater control operational in the soonest practicable timeframe.

NOTE: *Any corrective actions that result in changes to any of the stormwater controls or procedures shall be documented in the SWPPP within 7 calendar days of completing the corrective action work.*

Section IV.B. – Stormwater Control Modifications to be Implemented in Response to a Corrective Action Trigger [Print additional sheets as necessary]			
List of stormwater control(s) to be modified or replaced to correct the condition that required the Corrective Action	**Actual or Planned Completion Date**	**SWPPP Update Necessary?** **If yes, specify date SWPPP modified**	**Notes and observations**
1.	___ / ___ / _____	☐ Yes ☐ No ___ / ___ / _____	
2.	___ / ___ / _____	☐ Yes ☐ No ___ / ___ / _____	
3.	___ / ___ / _____	☐ Yes ☐ No ___ / ___ / _____	
4.	___ / ___ / _____	☐ Yes ☐ No ___ / ___ / _____	
5.	___ / ___ / _____	☐ Yes ☐ No ___ / ___ / _____	
6.	___ / ___ / _____	☐ Yes ☐ No ___ / ___ / _____	
7.	___ / ___ / _____	☐ Yes ☐ No ___ / ___ / _____	

Section V. CONTINUATION SHEET for Miscellaneous Items (see instructions) [Print additional sheets as necessary]

Use this space for miscellaneous information or as continuation of items found elsewhere in this report.

Section VI. Certification and Signature (CGP Appendix B. 9.)

Section VI.A. – Certification and Signature by Contractor or Subcontractor performing the inspections (if applicable)

Check one of the following:

- ☐ No instances of non-compliance were discovered during this inspection and the project was in full compliance with the SWPPP and permit.
- ☐ Inspection follow-up is required, in accordance with Parts 4.5(1) and 4.5(2) of the permit.

"I certify under penalty of law that this document and all attachments were prepared under my direction or supervision in accordance with a system designed to assure that qualified personnel properly gathered and evaluated the information submitted. Based on my inquiry of the person or persons who manage the system, or those persons directly responsible for gathering the information, the information submitted is, to the best of my knowledge and belief, true, accurate, and complete. I am aware that there are significant penalties for submitting false information, including the possibility of fine and imprisonment for knowing violations."

Signature of Contractor or Subcontractor: _____ Title: _____

Printed name : _____ Date: _____

Business / Agency: _____ Phone number: _____

Section VI.B. – Certification and Signature by Permittee (permittee / operator or a duly authorized representative is required to sign)

Check one of the following:

- ☐ No instances of non-compliance were discovered during this inspection and the project was in full compliance with the SWPPP and permit.
- ☐ Inspection follow-up is required, in accordance with Parts 4.5(1) and 4.5(2) of the permit.

"I certify under penalty of law that this document and all attachments were prepared under my direction or supervision in accordance with a system designed to assure that qualified personnel properly gathered and evaluated the information submitted. Based on my inquiry of the person or persons who manage the system, or those persons directly responsible for gathering the information, the information submitted is, to the best of my knowledge and belief, true, accurate, and complete. I am aware that there are significant penalties for submitting false information, including the possibility of fine and imprisonment for knowing violations."

Signature of Permittee or
"Duly Authorized Representative": _____ Title: _____

Printed Name: _____ Date: _____

Business / Agency: _____ Phone number: _____

Appendix D
Technical Memorandum 3: Ecological Comparison Values for Metals and Polycyclic Aromatic Hydrocarbons in Soil

Pacific Gas and Electric Company

Yvonne Meeks
Manager

Environmental Remediation
Gas T&D Department

Mailing Address
4325 South Higuera Sreet
San Luis Obispo, CA 93401
Location
6588 Ontario Road
San Luis Obispo, CA 93405
Tel: (805) 234-2257
Email: yjm1@pge.com

May 28, 2008

Dr. J. Michael Eichelberger
Associate Toxicologist
California Department of Toxic Substances Control
Human and Ecological Risk Division
8800 Cal Center Drive
Sacramento, California 95826

Ms. Carrie Marr
Environmental Contaminants Specialist
United States Fish and Wildlife Service
2321 W. Royal Palm Road, Suite 103
Phoenix, Arizona 85021

Subject: Topock Compressor Station – Technical Memorandum 3: Ecological Comparison Values for Metals and Polycyclic Aromatic Hydrocarbons in Soil

Dear Dr. Eichelberger and Ms. Marr:

Enclosed is a technical memorandum prepared as part of the RCRA Facility Investigation/Remedial Investigation (RFI/RI) process to support the soil investigation and site characterization at the Pacific Gas and Electric (PG&E) Topock Compressor Station. This technical memorandum describes the methods used to develop soil ecological comparison values (ECVs) for the currently defined chemicals of potential ecological concern (COPECs) potentially associated with activities at the Topock site. The currently identified COPECs are metals and polycyclic aromatic hydrocarbons (PAHs). The ECVs, while based on information developed during the ecological risk assessment (ERA) scoping, are to be applied only to soil investigation planning in conjunction with background values. Specifically, the ECVs are not intended for use as either cleanup goals or as screening levels to eliminate COPECs. This technical memorandum provides the background and objectives for this effort, the approach used to develop the ECVs, and the recommended ECVs for the current COPECs. Note that the COPEC list may be expanded or contracted based on the results of planned site investigation activities, including the development of soil background levels.

If you have any questions regarding this technical memorandum, please call me at (805) 546-5243.

Sincerely,

Yvonne Meeks
Topock Project Manager

Enclosures: Technical Memorandum 3: Ecological Comparison Values for Metals and Polycyclic Aromatic Hydrocarbons in Soil.

cc: Aaron Yue, DTSC
Karen Baker, DTSC
Kris Doebbler, DOI

ARCADIS
155 Montgomery Street
Suite 1510
San Francisco
California 94104
Tel 415.374.2744
Fax 415.374.2745

MEMO

To:
Yvonne Meeks
4325 South Hiquera,
San Luis Obispo, CA 93401

Copies:
Dave Gilbert
Bob Doss
Curt Russell
Rob Knutson
Drew Page
Robb Kapla
Elidia Dostal
Lisa Kellogg
Janis Lutrick
Bridgette DeShields
Wini Curley

From:
Mala Pattanayek
Kim Walsh

Date:
May 23, 2008

ARCADIS Project No.:
RC000689.0002.00005

Subject:
Technical Memorandum 3: Ecological Comparison Values for Metals and Polycyclic Aromatic Hydrocarbons in Soil

---

The purpose of this technical memorandum is to describe the methods used to develop soil ecological comparison values (ECVs) for the currently defined chemicals of potential ecological concern (COPECs) potentially associated with activities at the Pacific Gas and Electric (PG&E) Topock Compressor Station, located in San Bernardino County, California, 15 miles southeast of Needles (site). The currently identified COPECs are metals and polycyclic aromatic hydrocarbons (PAHs). The ECVs, while based on information developed during the ecological risk assessment (ERA) scoping, are to be applied only to soil investigation planning in conjunction with background values. Specifically, the ECVs are not intended for use as either cleanup goals or as screening levels to eliminate COPECs. The following sections provide the background and objectives for this effort, the approach used to develop the ECVs, and the recommended ECVs for the current COPECs. Note that the COPEC list may be expanded or contracted based on the results of planned site investigation activities, including the development of soil background levels.

Background and Objectives

The Topock Compressor Station began operations in December 1951, compressing natural gas supplied from the southwest United States for transport through pipelines to PG&E's service territory in central and northern California. This site is currently active and will continue operating into the foreseeable future.

PG&E is currently conducting investigative and remedial activities at the site. Historically, chromium was added to cooling water, and from 1951 to 1964, untreated wastewater was discharged to Bat Cave Wash. In 1996, PG&E entered into a Corrective Action Consent Agreement with the California Department of Toxic Substances Control (DTSC) to govern the investigation and remediation of the site. In July 2005, a Consent Agreement was executed with U.S. Department of Interior agencies that outlined the process by which PG&E would comply with the Comprehensive Environmental Response, Compensation, and Liability Act requirements for remediation of the site.

As part of the remedial investigation, soil data are being collected and analyzed for site characterization. The primary objective of soil ECVs, along with background data and Preliminary Remediation Goals (PRGs), is to assist in evaluating the adequacy of the site characterization. The ECVs, PRGs, and background concentrations will be used to evaluate the data collected for the Part A Phase I soil investigation and assist in identifying data gaps that may require Phase II soil sampling. As explained by CH2M HILL (2006a), developing soil ECVs can provide a tool for (1) confirming data adequacy and quality; and (2) evaluating the need for, and designing the sampling and analysis program for, the Part A Phase 2 soil investigation. Procedures for field sampling, chain of custody, laboratory analysis, reporting, and data validation are designed to provide an accurate measure of site characterization. However, technical issues exist that may impair the sampling and analysis process (e.g., typical laboratory-proposed detection limits may be elevated relative to risk-based comparison values). The soil ECVs developed herein can be used for additional soil data quality assessment such as to evaluate the use of appropriate method detection limits. The soil ECVs can also be used to evaluate the data collected to define the extent of the site-related constituents in soil and assess the need for additional site characterization data. Furthermore, the soil ECVs can also be used to optimize the selection of sampling locations to limit disturbing the existing habitat and evaluate the program for additional sampling, if deemed necessary.

The soil ECVs, which are risk-based values, were developed based on conservative exposure and effects assumptions using the standard hazard quotient (HQ) model for assessing risk to ecological receptors (USEPA,1997). The soil ECVs are not strictly site-specific but are relevant to the site. The approach is generic ecological assessment to the extent that off-the-shelf exposure parameters and toxicity values were used. The exposure assumptions and effect levels or toxicity values used in the model were obtained from guidance documents and widely accepted literature sources. The exposure assumptions were based on representative species likely present at the site based on species observation records, habitat, and feeding guilds. The toxicity values were based on endpoints measuring survival, growth, and reproduction to meet the assessment endpoint such as protection of ecological receptor populations. Details of the model are described below.

Approach

In this technical memorandum, soil ECVs were developed for metals and PAHs identified as preliminary COPECs in the *Human Health and Ecological Risk Assessment Work Plan* (RAWP) (ARCADIS, 2008).

The preliminary COPECs include Title 22 metals, hexavalent chromium, manganese, total petroleum hydrocarbons (TPH), and PAHs. Toxicity values are not available for TPH, and therefore, soil ECVs were not developed for TPH. The Title 22 metals include antimony, arsenic, barium, beryllium, cadmium, chromium, cobalt, copper, lead, mercury, molybdenum, nickel, selenium, silver, thallium, vanadium, and zinc. The PAHs include total low molecular weight (LMW) PAHs and total high molecular weight (HMW) PAHs. The National Oceanic and Atmospheric Administration (NOAA) defines LMW PAHs as PAHs with less than or equal to 3 rings and with molecular weight less than or equal to 192 atomic mass units (amu) (NOAA, 2000). Parent LMW PAHs include naphthalene, acenaphthylene, acenaphthene, fluorene, anthracene, and phenanthrene. HMW PAHs are defined as PAHs with greater than or equal to 4 rings and with molecular weight greater than or equal to 202 amu (NOAA, 2000). Parent HMW PAHs include pyrene, fluoranthene, benz(a)anthracene, chrysene, benzo(a)pyrene, benzo(b)fluoranthene, benzo(k)fluoranthene, benzo(g,h,i)perylene, indeno(1,2,3-cd)pyrene, and dibenz(a,h)anthracene.

For the objectives of this memorandum, soil ECVs were calculated for metals and PAHs using both lowest observed adverse effect levels or concentrations (LOAELs or LOAECs) and no-adverse effect levels or concentrations (NOAELs or NOAECs). The soil ECVs selected were based on the target toxicity values (i.e., values below which no unacceptable risk is expected; NOAELs or NOAECs) for the protection of the ecological receptors based on the representative receptors selected for the ecological risk assessment (ARCADIS, 2008) and include:

- Plants
- Invertebrates
- Birds
  - Gambel's Quail (granivore)
  - Cactus Wren (insectivore)
  - Red-Tailed Hawk (carnivore)
- Mammals
  - Desert Shrew (insectivore)
  - Merriam's Kangaroo Rat (granivore)
  - Desert Kit Fox (carnivore).

Soil Ecological Comparison Values Based on Plants and Invertebrates

For plants and invertebrates, although more than one exposure pathway is considered complete, generally route-specific doses are not quantified for plants and invertebrates. Exposures to soil are expressed in milligrams per kilogram (mg/kg), rather than doses, and generally encompass all potential exposure pathways for plants and invertebrates. Therefore, the screening values for the protection of plants and invertebrates discussed in the RAWP (ARCADIS, 2008) were used as soil ECVs, as presented in Table 1. The sources of screening values for plants and soil invertebrates used to develop soil ECVs are listed in order of preference:

- *Guidance for Developing Ecological Soil Screening Levels (Eco-SSLs)* (USEPA, 2008b)

- Oak Ridge National Laboratory (ORNL) documents (Efroymson et al., 1997a,b).

Confidence in certain screening values presented in the ORNL documents is low, as indicated in Table 1. Confidence in plant screening values for antimony, barium, beryllium, hexavalent chromium, mercury, molybdenum, thallium, and vanadium is low due to the low number of studies on which the screening values are based or other factors (Efroymson et al., 1997a). The soil type and test species (typically agricultural) may also vary significantly from site-specific conditions, or the toxic effects may be unspecified in the source study. There may be significant variability in the toxic responses noted. Similarly, confidence in the invertebrate screening values is low for arsenic, hexavalent chromium, and mercury because of the low number of studies on which they are based or other factors (Efroymson et al., 1997b).

In the RAWP, screening values were developed only for metals as presented in Table 1. These values were obtained from the sources listed above and are not discussed in this memorandum. To calculate soil ECVs for PAHs, screening values for plants and invertebrates were developed as described below.

Polycyclic Aromatic Hydrocarbon Screening Values for Plants

Plant screening values are not readily available for PAHs from literature sources, except for acenaphthene (Efroymson et al., 1997a), an LMW PAH, and benzo(a)pyrene (USEPA, 1999), an HMW PAH. Empirical toxicity data for naphthalene, another LMW PAH, are available in the U.S. Environmental Protection Agency (USEPA) ECOTOX database (USEPA, 2008a). A study reporting ecologically relevant adverse effects at the lowest concentration was used to develop plant screening values for naphthalene. Hulzebos et al. (1993) reported a 7-day EC50 of 100 mg/kg for reduced biomass in lettuce. This study tested nearly 40 organic contaminants in both soil and a nutrient solution to determine the relationship between toxicity thresholds in both matrices. In this study, an EC50 (i.e., concentration of a chemical causing an effect to 50 percent of the population) of 100 mg/kg was conservatively assumed to be equivalent to a lowest-observed adverse effects concentration (LOAEC) for more serious adverse effects. Following California Environmental Protection Agency (CalEPA) DTSC guidance (CalEPA, 1996), an uncertainty factor (UF) of

10 was applied to extrapolate to a no-observed adverse effects concentration (NOAEC) resulting in a value of 10 mg/kg, which was used as the plant screening value for naphthalene.

As naphthalene is a more common LMW PAH than acenapthene, the comparison value for total LMW PAHs for protection of plants was based on the NOAEC-based screening value of 10 mg/kg for naphthalene, and the comparison value for total HMW PAHs was based on the screening value of 1.2 mg/kg for benzo(a)pyrene (USEPA, 1999).

Polycyclic Aromatic Hydrocarbon Screening Values for Soil Invertebrates

PAH screening values for soil invertebrates are available in the USEPA's *Guidance for Developing Ecological Soil Screening Levels (EcoSSL)* (USEPA, 2008b). The EcoSSL for LMW PAH is 29 mg/kg and the EcoSSL for HMW PAH is 18 mg/kg (Table 1); these values were selected as comparison values for protection of soil invertebrates.

Soil Ecological Comparison Values Based on Wildlife Protection

For wildlife, soil ECVs were developed using a risk-based approach incorporating exposure pathways for food and soil ingestion, which are considered the most significant pathways for most sites (USEPA, 2008b). The wildlife indicator receptors were selected to represent a cross-section of feeding guilds for each assessment endpoint so that sufficient rates of survival, growth, and reproduction for their representative populations could be evaluated.

For each wildlife receptor (i.e., bird and mammal) listed above, soil ECVs were developed following USEPA guidance (USEPA, 1997; USEPA, 2008b) and were based on a food-web model integrating ecological receptor exposures and effects. The exposure assumptions and effects levels for wildlife described in the RAWP (ARCADIS, 2008) were used to develop soil ECVs. The exposure assumptions that were used to estimate exposure dose for the indicator species such as body weights, food ingestion rates, composition of diet, and bioaccumulation factors (BAFs) were obtained from guidance documents or widely accepted literature sources as described in the RAWP (ARCADIS, 2008). The exposure assumptions used in the soil ECV model for each wildlife receptor are presented in Attachment 1. The effects levels or toxicity reference values (TRVs) that were used in the soil ECV model were also obtained from guidance documents or widely accepted literature sources. A TRV is defined as a daily dose of a chemical expressed in milligrams of chemical per kilogram of body weight per day (mg/kg bw-day) and represents a dose associated with no-effect or lowest-effect at the population level of ecological organization, even if exposure occurs over an extended duration. The TRVs used in the model are presented in Tables 2 and 3 and the details are explained below.

Soil ECVs were developed by re-arranging the standard USEPA (1997) HQ model (Equation 1) to solve for a target HQ of 1, which is considered to be protective of ecological receptors. The model used to solve for ECVs is as follows:

$$HQ = \frac{Dose}{TRV} = \frac{(C_{soil} \times SIR) + (C_{tissue} \times FIR) \times SUF}{TRV \times BW} = \frac{(C_{soil} \times SIR) + (C_{soil} \times BAF \times FIR) \times SUF}{TRV \times BW} = 1$$

Equation 1

Or:

$$ECV = C_{soil} = \frac{HQ \times TRV \times BW}{(SIR + [FIR \times BAF]) \times SUF}$$

Equation 2

Where:

Dose = *exposure dose (mg/kgBW-day)*

HQ = *hazard quotient (unitless); set at a target value of 1*

TRV = *toxicity reference value (milligrams per kilogram body weight per day [mg/kgBW-day])*

C_{soil} = *concentration of constituent in soil (mg/kg soil)*

SIR = *soil ingestion rate (kilogram soil per day [kg soil/day])*

C_{tissue} = *concentration of constituent in biota or tissue (mg/kg tissue)*

FIR = *food or biota ingestion rate (kilograms tissue per day [kg tissue/day])*

BW = *body weight of receptor (kilograms [kgBW])*

BAF = *bioaccumulation factor or regression for media-to-biota uptake (kilogram tissue per kilogram soil [kg soil/kg tissue])*

SUF = *site use factor (unitless); represents the fraction of the exposure area for the receptor represented by the area of contamination generally calculated by dividing the area of contamination by the home or foraging range of the receptor.*

ECV = *ecological comparison value (mg/kg soil)*

Depending on the chemical, tissue concentrations (C_{tissue}) were calculated using different combinations of uptake regressions or uptake factors (referred to as soil-to-biota BAFs in the RAWP [ARCADIS, 2008]). Uptake regressions are linear exponential equations, while UFs are simple multipliers, as shown in Equation 3.

$$C_{tissue} = e^{a} \times \left(C_{soil}\right)^{b} \quad or \quad \ln\left(C_{tissue}\right) = a + b \times \ln\left(C_{soil}\right) \qquad \text{Equation 3}$$

Alternatively:

$$C_{tissue} = UF_{tissue} \times C_{soil}$$

Where:

C_{tissue} = *tissue concentration (mg/kg of tissue)*

C_{soil} = *soil concentration (mg/kg of soil)*

a = *compound specific regression equation constant (unitless)*

b = *compound specific regression equation constant (unitless)*

UF_{tissue} = *uptake factor from soil to tissue (unitless)*

Incorporating uptake regressions in lieu of a simple UF in the dose equation (Equation 2) significantly complicates the overall dose calculation. As the bioaccumulation regression places C_{soil} subject to an exponential term, solving for C_{soil} becomes extremely cumbersome. Because of the challenges associated with back-calculating ECVs with dose equations that rely on exponential regressions for modeling tissue concentrations, a forward-calculation methodology was developed to simplify the calculation steps and reduce the potential for mathematical error. An automated, iterative calculation algorithm was used to combine the dose equation and tissue regression equation(s) into a single forward calculation by using the Microsoft® Solver™ software. Solver™ is an add-on to Microsoft® Excel that finds a solution by iterative trial-and-error that satisfies calculation constraints introduced by having interdependent mathematical equations. In this case, the interdependent equations are the tissue uptake equation(s), which rely on a media concentration and a dose equation that rely on the same media concentration (as the tissue uptake equation) and the solution of the uptake equation(s). The media uptake regression(s) and dose equation were combined using Solver™ and used to calculate ECVs. Figure 1 depicts (as an example) a flowchart

of the iterative process that was followed, and the associated equations that were used to calculate ECV for the desert shrew.

An added benefit of using Solver™ to determine ECV is that it allows instant confirmation of accuracy. The spreadsheet cell representing C_{soil} (the results output from Solver™) is instantaneously fed back through the tissue uptake, dose, and HQ equations to calculate an HQ. As long as the resulting HQ value equals 1 (dose/TRV), it can be confidently concluded that the Solver™-based model performed the calculations correctly and that the resulting C_{soil} is the accurate ECV.

In the RAWP (ARCADIS, 2008), wildlife TRVs and BAFs were developed only for metals. To calculate soil ECVs for PAHs, wildlife TRVs and BAFs for PAHs were also developed as described below.

Bioaccumulation Factors for Polycyclic Aromatic Hydrocarbons

Bioaccumulation in animal tissue or uptake in plants is the process where COPECs in the surrounding media are accumulated within the tissues of ecological receptors, especially to concentrations higher than in the surrounding media. Any COPEC that is excreted or metabolized at a slower rate than its uptake through absorption and ingestion will increase in tissues over time, resulting in bioaccumulation. Constituents with high octanol-water partitioning coefficient (log K_{ow}) are more likely to bioaccumulate in tissues of prey (plants, invertebrates, and mammals) due to their lipophilic nature (USEPA, 2000). Additionally, some metals that are not readily excreted are also known to bioaccumulate (e.g., lead). COPECs that bioaccumulate have the potential to be passed up the food chain.

BAFs are multipliers that are used to estimate concentrations of constituents that can accumulate in tissues through any route of exposure (USEPA, 2000). For plants, the BAF is sometimes referred to as a plant uptake factor. In this memorandum, BAFs were used to estimate concentrations of COPECs in biota and food item tissue (i.e., prey) from soil.

The approach used to develop BAFs for metals in the RAWP (ARCADIS, 2008) was also used to develop soil-to-biota BAFs for PAHs. BAFs for soil-to-plants and soil-to-invertebrates for LMW and HMW PAHs are available in USEPA's EcoSSL guidance (USEPA, 2008b) and are not discussed in this memorandum. According to USEPA EcoSSL guidance, semivolatile organic compounds, including PAHs tend to metabolize rapidly in birds and mammals, and therefore, uptake of these constituents from soil-to-mammal were assumed to be zero (USEPA, 2008b). The BAFs for metals and PAHs used to develop soil ECVs are presented in Table 4.

Toxicity Reference Values

In the RAWP (ARCADIS, 2008), two sets of wildlife TRVs for metals were presented as shown in Tables 2 and 3, and these were:

- Proposed TRVs: these were primarily based on the TRVs used to develop USEPA's EcoSSLs (USEPA, 2008b); other sources included ORNL: Toxicological Benchmarks for Wildlife (Sample et al., 1996) and other published sources (e.g., USEPA Region 6 ERA Guidance [USEPA, 1999]).

- DTSC-recommended TRVs: these were preferably based on the Region 9 Biological Technical Assistance Group (BTAG) TRVs (CalEPA, 2002).

For each set of wildlife TRVs, a range of TRVs were developed to estimate a range of potential risks to wildlife (ARCADIS, 2008). The low TRVs were preferably based on chronic no observable adverse effects levels (NOAELs) and the high TRVs were preferably based on the lowest observed adverse effects levels (LOAELs). In the case of DTSC-recommended TRVs, the low BTAG TRVs are NOAEL-based and the high BTAG TRVs are based on a midpoint of a variety of adverse effects and are not necessarily LOAEL-based (CalEPA, 2002). Some of the TRVs were allometrically adjusted for account for significant difference in body weights between the test species and the representative indicator species based on CalEPA guidance (CalEPA, 1999). For the calculation of soil ECVs, the allometrically adjusted TRVs listed in Table 2 and 3 were used for the representative receptors.

Similarly, following the approach described in the RAWP (ARCADIS, 2008), a range of wildlife TRVs for PAHs were developed as described below.

Bird Toxicity Reference Values for Polycyclic Aromatic Hydrocarbons

The bird TRVs for PAHs used to develop soil ECVs are presented in Table 2 and 3. For birds, there are no TRVs for PAHs reported in the EcoSSL guidance (USEPA, 2007). Published TRVs are available in USEPA Region 6 guidance (USEPA, 1999). However, the study (Brunstrom et al., 1991) was based on egg injection tests that are not considered appropriate for developing TRVs (USEPA, 2008b). Several studies were reviewed, and the most appropriate study was selected to develop bird TRVs for PAHs.

For LMW PAHs, Patton and Dieter's study (1980) evaluating the effect of PAH mixtures on hepatic function in mallard duck livers using a mixture of paraffins and aromatic hydrocarbons was selected. There were visible signs of toxicity, indicated by significant increase in liver weight for the group that were administered 4,000 mg/kg PAH mixture, but livers appeared normal in texture and color. No effects were observed for the 400 mg/kg treatment group. Therefore, 400 mg/kg was selected as the NOAEC and the 4,000 mg/kg was selected as the LOAEC. The NOAEC and the LOAEC were then converted to a NOAEL-based TRV and a LOAEL-based TRV, respectively, using the standard dose equations shown below:

$$TRV_{NOAEL} = \frac{NOAEC \times IR}{BW} = \frac{400\ mg/kg \times 0.059\,kg/day}{1.04\,kgBW} = 22.8\,mg/kgBW - day$$

Equation 4

$$TRV_{LOAEL} = \frac{LOAEC \times IR}{BW} = \frac{4000\,mg/kg \times 0.059\,kg/day}{1.04\,kgBW} = 228\,mg/kgBW - day$$

Equation 5

Where:

TRV_{NOAEL}	*= no-observed adverse effects level based toxicity reference value (milligrams per kilogram body weight per day [mg/kgBW-day])*
TRV_{LOAEL}	*= lowest-observed adverse effects level based toxicity reference value (milligrams per kilogram body weight per day [mg/kgBW-day])*
IR	*= ingestion rate (kilogram soil per day [kg soil/day]); calculated from allometric equation for food ingestion rate in dry weight for all birds (USEPA,1993)*
BW	*= body weight of receptor (kilograms [kgBW]); assuming approximately 1.04 kg for the mallard ducks (from USEPA, 1993)*

For HMW PAHs, a study by Trust et al. (1994) reporting a NOAEL of 10 mg/kg bw-day and a LOAEL of 100 mg/kg bw-day for overt signs of toxicity, such as decreased body mass in European starlings exposed to 7,12-dimethylbenz(a)anthracene, was selected to develop TRVs. Immunosuppression was observed at higher doses. The exposures were via oral gavage, and the study was conducted on nestlings, a sensitive life-stage. No UFs were applied, and therefore, an avian low TRV of 10 mg/kg bw-day and an avian high TRV of 100 mg/kg bw-day were used for HMW PAHs.

There are no BTAG PAH TRVs for birds. Therefore, there are no separate DTSC-recommended PAH TRVs for birds.

Mammal Toxicity Reference Values for Polycyclic Aromatic Hydrocarbons

Mammal TRVs for PAHs are available in the EcoSSL guidance (USEPA, 2007). The NOAEL of 65.6 mg/kg bw-day was selected as the low TRV for LMW PAHs and the LOAEL of 0.6 mg/kg bw-day was selected as the low TRV for HMW PAHs. The EcoSSL guidance (USEPA, 2007; USEPA, 2008b) does not report LOAELs; therefore, LOAELs for PAHs were developed following the approach described in the RAWP (ARCADIS, 2008). For LMW and HMW PAHs, bounded NOAELs were reported as TRVs; therefore, the LOAELs from the same study and endpoint was selected.

BTAG TRVs are available for mammals (CalEPA, 2002). The BTAG TRVs for naphthalene was used for LMW PAHs and the BTAG TRVs for benzo(a)pyrene was used for HMW PAHs.

The mammal TRVs for metals and PAHs used to develop soil ECVs are presented in Table 3 and 4.

Selection of Soil Ecological Comparison Values

The soil ECVs based on plants and invertebrates are presented in Table 1. For wildlife, a range of soil ECVs were developed following the approach described above and presented in tables in Attachment 1. A summary of the soil ECVs developed, based on the proposed wildlife TRVs and the DTSC-recommended TRVs, is presented in Table 5. As discussed earlier, the purpose of this technical memorandum is to develop soil ECVs for data quality assessment and use in evaluating the Part A Phase 1 data and making further site characterization decisions. The ECVs are conservative values but are not intended to be used to screen out COPECs. ECVs are also specifically not intended to be used as cleanup goals.

In order to select the most appropriate soil ECVs for each constituent, the most conservative of all the ecological receptor-based soil ECVs was selected as the final soil ECV unless the screening value or TRVs used to calculate that soil ECV was low in confidence. In such cases, the next less conservative soil ECV was selected as the final (e.g., soil ECV for mercury). The minimum of all the soil ECVs from Table 1 (plants and invertebrates) and Table 5 (wildlife) for each constituent and the selected soil ECVs are presented in Table 6. It should be noted that certain ECVs (e.g. antimony, cadmium, lead, mercury, and selenium) are below the standard reporting limits defined in the *Quality Assurance Project Plan, PG&E Topock Program (*QAPP; CH2M HILL, 2004, 2006b, 2008). Additionally, certain ECVs will likely be lower than final background soil concentrations. In that case, background concentrations would be used to set analytical detection limits and to consider the need for additional characterization.

Tables

1 Soil Ecological Comparison Values Based on Plant and Invertebrate Screening Values

2 Proposed Toxicity Reference Values

3 DTSC-Recommended Toxicity Reference Values

4 Bioaccumulation Factors

5 Summary of Soil Ecological Comparison Values Based on Wildlife

6 Summary of Selected Soil Ecological Comparison Values

Figure

1 Diagram Depicting ECV Derivation Methodology for the Desert Shrew

Attachment

1 Derivation of Wildlife Based Soil ECVs

References

ARCADIS. 2008. *Human Health and Ecological Risk Assessment Work Plan*. PG&E Topock Compressor Station, Needles California. February 2008.

Brunstrom, B, D. Broman, and C. Naf. 1991. Toxicity and EROD-inducing potency of 24 polycyclic aromatic hydrocarbons (PAHs) in chick embryos. *Arch. Toxicol*. 65:485-489.

CalEPA. 1996. *Guidance for Ecological Risk Assessment at Hazardous Waste Sites and Permitted Facilities*. Parts A and B. California Environmental Protection Agency. July 4.

CalEPA. 1999. HERD EcoNote 2, Calculation of Range of Intakes for Vertebrate Receptors. California Environmental Protection Agency. June 9.

CalEPA. 2002. *Currently Recommended U.S. Environmental Protection Agency Region 9 Biological Technical Assistance Group (BTAG) Mammalian and Avian Toxicity Reference Values (TRVs).* Ecological Risk Assessment Note 5 (EcoNote 5). California Environmental Protection Agency, Department of Toxic Substances Control, Human and Ecological Risk Assessment Division. November 21, 2002.

CH2M HILL. 2004. Quality Assurance Project Plan, PG&E Topock Program, Needles, California. November.

CH2M HILL. 2006a. *Draft RCRA Facility Investigation Report/Remedial Investigation* Soil Investigation Work Plan Part A. *PG&E Topock Compressor Station, Needles California.* November 2002.

CH2M HILL. 2006b. Quality Assurance Project Plan Addendum, PG&E Topock Program. September 27.

CH2M HILL. 2008. Draft Quality Assurance Project Plan, PG&E Topock Program, Needles, California. April.

Efroymson, R.A., M.E. Will, G.W. Suter II, and A.C. Wooten. 1997a. *Toxicological Benchmarks for Screening Contaminants of Potential Concern for Effects on Terrestrial Plants: 1997 Revision.* Prepared for the Oak Ridge Laboratory. November 1997.

Efroymson, R.A., M.E. Will, G.W. Suter II, and A.C. Wooten. 1997b. Toxicological Benchmarks for Contaminants of Potential Concern for Effects on Soil and Litter Invertebrates and Heterotrophic Process: 1997 Revision. Prepared for the Oak Ridge Laboratory. November.

Hulzebos, E.M., D.M.M. Adema, E.M.Dirven-Van Breemen, L. Henzen, W.A.Van Dis, H.A. Herbold, J.A. Hoekstra, and R. Baerselman. 1993. Phytotoxicity studies with *Lactuca sativa* in soil and nutrient solution. *Environ. Toxicol. Chem.* 12(6):1079-1094.

NOAA. 2000. Contaminant Levels in Muscle of Four Species of Recreational Fish from the New York Bight Apex. NOAA Technical Memorandum NMFS-NE-157. National Oceanic and Atmospheric Administration. June. Online: http://www.nefsc.noaa.gov/nefsc/publications/tm/tm157/tm157.htm

Patton J.F. and M.P. Dieter. 1980. Effects of petroleum hydrocarbons on hepatic function in the duck. *Comp. Biochem. Physiol.* 65C:33-36.

Sample, B.E., D.M. Opresko, and G.W. Suter II. 1996. Toxicological Benchmarks for Wildlife: 1996 Revision. Oak Ridge National Laboratory, Oak Ridge, TN. 227 pp. ES/ER/TM-86/R3.

Trust, K.A., A. Fairbrother, and M.J. Hooper. 1994. Effects of 7,12-dimethylbenz(a)anthracene on immune function and missed-function oxygenase activity in the European starling. *Environ. Toxicol. Chem.* 13(5): 821-830.

USEPA. 1993. *Wildlife Exposure Factors Handbook*. *Volumes I and II.* EPA/600/R-93/187. U.S. Environmental Protection Agency, Office of Research and Development, Washington DC.

USEPA. 1997. *Ecological Risk Assessment Guidance for Superfund: Process for Designing and Conducting Ecological Risk Assessments, Interim Final*. U.S. Environmental Protection Agency, Solid Waste and Emergency Response. OSWER 9285.7-25. June 1997.

USEPA. 1999. *Screening Level Ecological Risk Assessment Protocol for Hazardous Waste Combustion Facilities*. Peer Review Draft. U.S. Environmental Protection Agency. August 1999.

USEPA. 2000c. Bioaccumulation Testing and Interpretation for the Purpose of Sediment Quality Assessment. EPA/-823-R-00-001. U.S. Environmental Protection Agency. February.

USEPA. 2007. *Ecological Soil Screening Levels for Polycyclic Aromatic Hydrocarbons, Interim Final*. U.S. Environmental Protection Agency, Office of Solid Waste and Emergency Response. June 2007.

USEPA. 2008a. ECOTOX database. U.S. Environmental Protection Agency. Website updated daily: http://cfpub.epa.gov/ecotox/

USEPA. 2008b. *Guidance for Developing Ecological Soil Screening Levels (EcoSSLs)*. U.S. Environmental Protection Agency, Office of Solid Waste and Emergency Response, Washington D.C. 2005 Revision, updated December 2006. 85 pp. http://www.epa.gov/ecotox/ecossl.

ARCADIS

Tables

Table 1
Soil Ecological Comparison Values
Based on Plant and Invertebrate Screening Values

Technical Memorandum 3: Ecological Comparison Values for Metals and PAHs in Soil
PG&E Topock
Needles, California

Constituents	Plant (mg/kg)	Invertebrate (mg/kg)
Antimony	5*	78
Arsenic	18	60**
Barium	500*	330
Beryllium	10*	40
Cadmium	32	140
Chromium, trivalent	NA	NA
Chromium, hexavalent	1*	0.4**
Chromium, total	NA	NA
Cobalt	13	NA
Copper	70	80
Lead	120	1700
Manganese	220	450
Mercury	0.3*	0.1**
Molybdenum	2*	NA
Nickel	38	280
Selenium	0.52	4.1
Silver	560	NA
Thallium	1*	NA
Vanadium	2*	NA
Zinc	160	120
LMW PAHs	10	29
HMW PAHs	1.2	18

Notes:
*Confidence in this benchmark is low due to the low number of studies on which it is based or other factors. The soil type and test species (typically agricultural) may also vary significantly from site-specific conditions, or the toxic effects may be uncertain.
**Confidence in this benchmark is low due to the low number of studies on which it is based or other factors. The tests were conducted with earthworms.

Indicates USEPA EcoSSL
Indicates ORNL Screening Benchmark
Primary sources (see text).

LMW PAHs - low molecular weight polycyclic aromatic hydrocarbons
HMW PAHs - high molecular weight polycyclic aromatic hydrocarbons
mg/kg = milligrams per kilograms
ORNL - Oak Ridge National Laboratory
USEPA - U.S. Environmental Protection Agency

Sources:

Efroymson, R.A., M.E. Will, G.W. Suter II, and A.C. Wooten. 1997a. *Toxicological Benchmarks for Screening Contaminants of Potential Concern for Effects on Terrestrial Plants: 1997 Revision* . Prepared for the Oak Ridge Laboratory. November 1997.

Efroymson, R.A., M.E. Will, G.W. Suter II, and A.C. Wooten. 1997b. *Toxicological Benchmarks for Contaminants of Potential Concern for Effects on Soil and Litter Invertebrates and Heterotrophic Process: 1997 Revision* . Prepared for the Oak Ridge Laboratory.

Sample, B.E., D.M. Opresko, and G.W. Suter II. 1996. *Toxicological Benchmarks for Wildlife: 1996 Revision* . Oak Ridge National Laboratory, Oak Ridge, TN. 227 pp. ES/ER/TM-86/R3.

USEPA. 2008b. *Guidance for Developing Ecological Soil Screening Levels (EcoSSLs)* . OSWER Directive 9285.7-55. United States Environmental Protection Agency Office of Solid Waste and Emergency Response. Washington, D.C.

Table 2
Proposed Toxicity Reference Values

Technical Memorandum 3: Ecological Comparison Values for Metals and PAHs in Soil
PG&E Topock
Needles, California

Constituent	Wildlife TRVs (mg/kgBW-day)							
	Birds				Mammals			
	Low TRV (NOAEL)	Source	High TRV (LOAEL)	Source	Low TRV (NOAEL)	Source	High TRV (LOAEL)	Source
Antimony	NA	--	NA	--	0.059	USEPA, 2005	0.59	USEPA, 2005
Arsenic	2.24	USEPA, 2005	3.55	USEPA, 2005	1.04	USEPA, 2005	1.66	USEPA, 2005
Arsenic (allom adj)[a]	--	--	--	--	1.53	for desert shrew[a]	2.44	for desert shrew[a]
	--	--	--	--	1.46	for kangaroo rat[a]	2.33	for kangaroo rat[a]
Barium	NA	--	NA	--	51.8	USEPA, 2005	82.6	USEPA, 2005
Beryllium	NA	--	NA	--	0.532	USEPA, 2005	0.630	USEPA, 2005
Cadmium	1.47	USEPA, 2005	6.35	USEPA, 2005	0.770	USEPA, 2005	7.7	USEPA, 2005
Chromium	2.66	USEPA, 2005	15.6	USEPA, 2005	2.40	USEPA, 2005	9.62	USEPA, 2005
Hexavalent Chromium	NA	--	NA	--	9.24	USEPA, 2008	38.8	USEPA, 2008
Cobalt	7.61	USEPA, 2005	18.3	USEPA, 2005	7.33	USEPA, 2005	18.8	USEPA, 2005
Copper	4.05	USEPA, 2007	12.1	USEPA, 2007	5.60	USEPA, 2007	9.34	USEPA, 2007
Copper (allom adj)[a]	--	--	--	--	9.43	for desert shrew[a]	15.73	for desert shrew[a]
	--	--	--	--	9.04	for kangaroo rat[a]	15.07	for kangaroo rat[a]
Lead	1.63	USEPA, 2005	3.26	USEPA, 2005	4.70	USEPA, 2005	8.90	USEPA, 2005
Mercury	0.039	CalEPA BTAG, 2002	0.2	CalEPA BTAG, 2002	0.25	CalEPA BTAG,	4	CalEPA BTAG,
Molybdenum	3.5	Sample et al., 1996	35.3	Sample et al., 1996	0.26	Sample et al., 1996	2.6	Sample et al., 1996
Nickel	6.71	USEPA, 2007	18.6	USEPA, 2007	1.70	USEPA, 2007	3.40	USEPA, 2007
Selenium	0.290	USEPA, 2007	0.579	USEPA, 2007	0.143	USEPA, 2007	0.215	USEPA, 2007
Selenium (allom adj)[a]	--	--	--	--	0.23	for desert shrew[a]	0.35	for desert shrew[a]
	--	--	--	--	0.21	for kangaroo rat[a]	0.31	for kangaroo rat[a]
Silver	2.02	USEPA, 2006	20.2	USEPA, 2006	6.02	USEPA, 2006	60.2	USEPA, 2006
Silver (allom adj)[a]	--	--	--	--	8.77	for desert shrew[a]	87.68	for desert shrew[a]
	--	--	--	--	8.40	for kangaroo rat[a]	84.01	for kangaroo rat[a]
Thallium	0.35	USEPA, 1999	3.5	USEPA, 1999	0.48	CalEPA BTAG,	1.43	CalEPA BTAG,
Vanadium	0.344	USEPA, 2005	0.688	USEPA, 2005	4.16	USEPA, 2005	8.31	USEPA, 2005
Zinc	66.1	USEPA, 2007	171	USEPA, 2007	75.4	USEPA, 2007	298	USEPA, 2007
Total LMW PAHs	22.8	1980	228	1980	65.6	USEPA, 2007	328	USEPA, 2007
Total HMW PAHs	10	Trust et al., 1994	100	Trust et al., 1994	0.6	USEPA, 2007	3	USEPA, 2007

Table 2
Proposed Toxicity Reference Values

Technical Memorandum 3: Ecological Comparison Values for Metals and PAHs in Soil
PG&E Topock
Needles, California

Notes:
TRVs for metals presented in the *Human Health and Ecological Risk Assessment Work Plan* (RAWP; ARCADIS, 2008).
TRVs updated in guidance since the RAWP was submitted.
TRVs developed for this technical memorandum.

a. TRVs allometrically adjusted significant difference in body weights using the following equation (Sample and Arenal, 1999):

Aw - At * (BWt/BWw)^1-b

where:

Aw - toxicity value of wildlife species
At - toxicity value of test species (TRV)
BWt - body weight of test species
BWw - body weight of wildlife species
b - allometric scaling factor (1.2 for birds, 0.94 for mammals)

-- - not applicable
BTAG - Biological Technical Assistance Group
CalEPA - California Environmental Protection Agency
LOAEL - lowest observed adverse effects level
mg/kgBW-day - milligrams per kilogram of body weight per day
NA - not available
NOAEL - no observed adverse effects level
TRV - toxicity reference value
USEPA - U.S. Environmental Protection Agency

Sources:

CalEPA. 2002. *Currently Recommended U.S. Environmental Protection Agency Region 9 Biological Technical Assistance Group (BTAG) Mammalian and Avian Toxicity Reference Values (TRVs)* . Department of Toxic Substances Control: Human and Ecological Risk Division

Patton, J.F. and M.P. Dieter. 1980. *Effects of Petroleum Hydrocarbons on Hepatic Function in the Duck* . *Comp. Biochem. Physiol.* Vol. 65C pp. 33-36.

Sample, B.E., D.M. Opresko, and G.W. Suter II. 1996. *Toxicological Benchmarks for Wildlife: 1996 Revision*. Oak Ridge National Laboratory, Oak Ridge, TN. 227 pp. ES/ER/TM-86/R3.

Sample, B.E. and C.A. Arenal. 1999. *Allometric Models for Interspecies Extrapolation of Wildlife Toxicity Data*. Bull. Environ. Contam. Toxicol. (1999) 62: 653-663.

Trust, K.A., A. Fairbrother, and M.J. Hooper. 1994. *Effects of 7,12-Dimethylbenz[a]anthracene on Immune Function and Mixed-Function Oxygenase Activity in the European Starling* . *Environmental Toxicology and Chemistry.* Vol. 13(5) pp. 821-830.

USEPA 1999. *Region 6 Screening Level Ecological Risk Assessment Protocol for Hazardous Waste Combustion Facilities: Appendix E Toxicity Reference Values*. August.

USEPA 2005-2008. *Guidance for Developing Ecological Soil Screening Levels (Eco-SSLs)*. OSWER Directive 9285.7-55. United States Environmental Protection Agency Office of Solid Waste and Emergency Response. Washington, DC. November 2003, revised March, 2005

Table 3
DTSC-Recommended Toxicity Reference Values

Technical Memorandum 3: Ecological Comparison Values for Metals and PAHs in Soil
PG&E Topock
Needles, California

	Wildlife TRVs (mg/kgBW-day)							
	Birds				Mammals			
Constituent	Low TRV (NOAEL)	Source	High TRV (LOAEL)	Source	Low TRV (NOAEL)	Source	High TRV (LOAEL)	Source
Antimony	NA	--	NA	--	0.059	USEPA, 2005	0.59	USEPA, 2005
Arsenic	5.5	CalEPA BTAG, 2002	22.0	CalEPA BTAG, 2002	0.32	CalEPA BTAG, 2002	4.7	CalEPA BTAG, 2002
Barium	NA	--	NA	--	51.8	USEPA, 2005	82.6	USEPA, 2005
Beryllium	NA	--	NA	--	0.532	USEPA, 2005	0.630	USEPA, 2005
Cadmium	0.08	CalEPA BTAG, 2002	10.4	CalEPA BTAG, 2002	0.060	CalEPA BTAG, 2002	2.64	CalEPA BTAG, 2002
Chromium	2.66	USEPA, 2005	15.6	USEPA, 2005	2.40	USEPA, 2005	9.62	USEPA, 2005
Hexavalent Chromium	NA	--	NA	--	9.24	USEPA, 2008	38.8	USEPA, 2008
Cobalt	7.61	USEPA, 2005	18.3	USEPA, 2005	1.2	CalEPA BTAG, 2002	20	CalEPA BTAG, 2002
Copper	2.30	CalEPA BTAG, 2002	52.3	CalEPA BTAG, 2002	2.67	CalEPA BTAG, 2002	632	CalEPA BTAG, 2002
Lead	0.014	CalEPA BTAG, 2002	8.75	CalEPA BTAG, 2002	1.0	CalEPA BTAG, 2002	241	CalEPA BTAG, 2002
Mercury	0.039	2002	0.18	CalEPA BTAG, 2002	0.25	CalEPA BTAG, 2002	4	2002
Molybdenum	3.5	Sample et al., 1996	35.3	Sample et al., 1996	0.26	Sample et al., 1996	2.6	Sample et al., 1996
Nickel	1.38	CalEPA BTAG, 2002	56.3	CalEPA BTAG, 2002	0.133	CalEPA BTAG, 2002	31.6	CalEPA BTAG, 2002
Selenium	0.23	2002	0.93	CalEPA BTAG, 2002	0.05	CalEPA BTAG, 2002	1.21	2002
Silver	2.02	USEPA, 2006	20.2	USEPA, 2006	6.02	USEPA, 2006	60.2	USEPA, 2006
Silver (allom adj)[a]	--	--	--	--	8.77	for desert shrew[a]	87.68	for desert shrew[a]
	--	--	--	--	8.40	for kangaroo rat[a]	84.01	for kangaroo rat[a]
Thallium	0.35	USEPA, 1999b	3.5	USEPA, 1999b	0.48	CalEPA BTAG, 2002	1.43	2002
Vanadium	0.344	USEPA, 2005	0.688	USEPA, 2005	4.16	USEPA, 2005	8.31	USEPA, 2005
Zinc	17.2	2002	172	CalEPA BTAG, 2002	9.60	CalEPA BTAG, 2002	411	2002
LMW PAHs	NA	--	NA	--	50	CalEPA BTAG, 2002	150	2002
HMW PAHs	NA	--	NA	--	1.31	CalEPA BTAG, 2002	32.8	CalEPA BTAG,

Table 3
DTSC-Recommended Toxicity Reference Values

Technical Memorandum 3: Ecological Comparison Values for Metals and PAHs in Soil
PG&E Topock
Needles, California

Notes:
TRVs for metals presented in the *Human Health and Ecological Risk Assessment Work Plan* (ARCADIS, 2008).
TRVs updated in guidance since the RAWP was submitted.
TRVs developed for this technical memorandum.

a. TRVs allometrically adjusted significant difference in body weights using the following equation (Sample and Arenal, 1999):

Aw - At * (BWt/BWw)^1-b

where:

Aw - toxicity value of wildlife species
At - toxicity value of test species (TRV)
BWt - body weight of test species
BWw - body weight of wildlife species
b - allometric scaling factor (1.2 for birds, 0.94 for mammals)

-- - not applicable
BTAG - Biological Technical Assistance Group
CalEPA - California Environmental Protection Agency
DTSC - Department of Toxic Substances Control
kg - kilograms
LOAEL - lowest observable adverse effects level
mg/kgBW-day - milligram(s) per kilogram body weight per day
NA - not available
NOAEL - no observable adverse effects level
TRV - toxicity reference value
UF - uncertainty factor
USEPA - U.S. Environmental Protection Agency

Sources:

CalEPA 2002. *Currently Recommended U.S. Environmental Protection Agency Region 9 Biological Technical Assistance Group (BTAG) Mammalian and Avian Toxicity Reference Values (TRVs)*. Department of Toxic Substances Control: Human and Ecological Risk Division.

Sample, B.E., D.M. Opresko, and G.W. Suter II. 1996. *Toxicological Benchmarks for Wildlife: 1996 Revision*. Oak Ridge National Laboratory, Oak Ridge, TN. 227 pp. ES/ER/TM-86/R3.

Sample, B.E. and C.A. Arenal. 1999. *Allometric Models for Interspecies Extrapolation of Wildlife Toxicity Data*. Bull. Environ. Contam. Toxicol. (1999) 62: 653-663.

USEPA 1999. *Region 6 Screening Level Ecological Risk Assessment Protocol for Hazardous Waste Combustion Facilities: Appendix E Toxicity Reference Values*. August.

USEPA 2005 -2008. *Guidance for Developing Ecological Soil Screening Levels (Eco-SSLs)*. OSWER Directive 9285.7-55. United States Environmental Protection Agency Office of Solid Waste and Emergency Response. Washington, DC. November 2003, revised March, 2007

Table 4
Bioaccumulation Factors

Technical Memorandum 3: Ecological Comparison Values for Metals and PAHs in Soil
PG&E Topock
Needles, California

Constituent	Soil-to-Biota Bioaccumulation Factors[a]		
	BAF_{plant} (dw) (kg soil/kg tissue)	BAF_{invert} (dw) (kg soil/kg tissue)	BAF_{mammal} (dw) (kg soil/kg tissue)
Antimony	$\ln(C_p) = 0.938 * \ln(C_s) - 3.233$	1.00	$0.05 * C_d$
Arsenic	0.03752	$\ln(C_i) = 0.706 * \ln(C_s) - 1.421$	$\ln(C_m) = 0.8188 * \ln(C_s) - 4.8471$
Barium	0.156	0.091	$0.0075 * C_d$
Beryllium	$\ln(C_p) = 0.7345 * \ln(C_s) - 0.5361$	0.045	$0.05 * C_d$
Cadmium	$\ln(C_p) = 0.546 * \ln(C_s) - 0.475$	$\ln(C_i) = 0.795 * \ln(C_s) + 2.114$	$\ln(C_m) = 0.4723 * \ln(C_s) - 1.2571$
Chromium, total	0.041	0.306	$\ln(C_m) = 0.7338 * \ln(C_s) - 1.4599$
Chromium, hexavalent	0.041	0.306	$\ln(C_m) = 0.7338 * \ln(C_s) - 1.4599$
Cobalt	0.0075	0.122	$\ln(C_m) = 1.307 * \ln(C_s) - 4.4669$
Copper	$\ln(C_p) = 0.394 * \ln(C_s) + 0.668$	0.515	$\ln(C_m) = 0.1444 * \ln(C_s) + 2.042$
Lead	$\ln(C_p) = 0.561 * \ln(C_s) - 1.328$	$\ln(C_i) = 0.807 * \ln(C_s) - 0.218$	$\ln(C_m) = 0.4422 * \ln(C_s) + 0.0761$
Mercury	$\ln(C_p) = 0.544 * \ln(C_s) - 0.996$	$\ln(C_i) = 0.3369 * \ln(C_s) - 0.078$	0.192
Molybdenum	0.25	5.50E-01	$\ln(C_m) = 0.006 * 50 * C_d$ [b]
Nickel	$\ln(C_p) = 0.748 * \ln(C_s) - 2.223$	1.059	$\ln(C_m) = 0.4658 * \ln(C_s) - 0.2462$
Selenium	$\ln(C_p) = 1.104 * \ln(C_s) - 0.677$	$\ln(C_i) = 0.733 * \ln(C_s) - 0.075$	$\ln(C_m) = 0.3764 * \ln(C_s) - 0.4158$
Silver	0.014	2.045	0.004
Thallium	0.004	5.50E-01	0.112
Vanadium	0.00485	0.042	0.0123
Zinc	$\ln(C_p) = 0.554 * \ln(C_s) + 1.575$	$\ln(C_i) = 0.328 * \ln(C_s) + 4.449$	$\ln(C_m) = 0.0706 * \ln(C_s) + 4.3632$
Total LMW PAH	ln(Cp) = 0.4544 * ln(Cs)-1.3205	3.04	0.0
Total HMW PAH	ln(Cp) = 0.9469 * ln(Cs)-1.7026	2.6	0.0

Notes:
BAFs for metals presented in the *Human Health and Ecological Risk Assessment Work Plan* (ARCADIS, 2008).
BAFs developed for this technical memorandum.

a. All BAFs from USEPA's Guidance for Developing Ecological Soil Screening Levels (EcoSSLs). U.S. Environmental Protection Agency, Office of Solid Waste and Emergency Response, Washington D.C. 2005 Revision, updated December 2006. 85 pp. http://www.epa.gov/ecotox/ecossl., except as otherwise noted.

b. Baes, C.F., R. Sharp, A. Sjoreen and R. Shor. 1984. A Review and Analysis of Parameters for Assessing Transport of Environmentally Released Radionuclides through Agriculture. Prepared by Oak Ridge National Laboratory for U.S. Dept. of Energy. 150 pp.

BAF - bioaccumulation factor
BAF_{invert} - soil-to-invertebrate uptake bioaccumulation factor (unitless)
BAF_{plant} - soil-to-plant uptake bioaccumulation factor (unitless)
C_p - constituent concentration in plants
C_i - constituent concentration in invertebrates
C_s - constituent concentration in soil
C_m - constituent concentration in mammals
C_d - concentration in diet
dw - dry weight
HMW PAHs - high molecular weight polycyclic aromatic hydrocarbons
In - natural log
LMW PAHs - low molecular weight polycyclic aromatic hydrocarbons
USEPA - U.S. Environmental Protection Agency

Table 5
Summary of Soil Ecological Comparison Values
Based on Wildlife

Technical Memorandum 3: Ecological Comparison Values for Metals and PAHs in Soil
PG&E Topock
Needles, California

Ecological Receptor	Based on:	Antimony		Arsenic		Arsenic (Allometrically Adjusted)[e]		Barium		Beryllium		Cadmium	
		Soil ECVs (mg/kg dw)		Soil ECVs (mg/kg dw)		Soil ECVs (mg/kg dw)		Soil ECVs (mg/kg dw)		Soil ECVs (mg/kg dw)		Soil ECVs (mg/kg dw)	
		Low[c]	High[d]	Low[c]	High[d]	High[d]	Low[c]	Low[c]	High[d]	High[d]	Low[c]	Low[c]	High[d]
Gambel's Quail	Proposed TRVs[a]	NA	NA	4.13E+02	6.54E+02	NA	NA	NA	NA	NA	NA	2.48E+02	1.29E+03
Cactus Wren		NA	NA	7.61E+01	1.28E+02	NA	NA	NA	NA	NA	NA	9.47E-01	5.93E+00
Red-tailed Hawk		NA	NA	1.76E+03	2.82E+03	NA	NA	NA	NA	NA	NA	8.37E+02	4.63E+03
Desert Shrew		2.85E-01	2.85E+00	NA	NA	8.90E+01	1.62E+02	2.30E+03	3.67E+03	4.03E+01	4.77E+01	3.74E-01	6.75E+00
Merriam's Kangaroo Rat		1.24E+01	1.35E+02	NA	NA	2.89E+02	4.62E+02	3.50E+03	5.58E+03	2.33E+01	2.91E+01	8.93E+01	2.18E+03
Desert Kit Fox		2.14E+01	2.14E+02	9.72E+02	1.56E+03	NA	NA	5.11E+04	8.14E+04	4.97E+02	5.89E+02	5.74E+02	7.11E+03
Gambel's Quail	DTSC-Recommended TRVs[b]	NA	NA	1.01E+03	4.06E+03	NA	NA	NA	NA	NA	NA	5.26E+00	2.21E+03
Cactus Wren		NA	NA	2.10E+02	9.60E+02	NA	NA	NA	NA	NA	NA	2.45E-02	1.10E+01
Red-tailed Hawk		NA	NA	4.41E+03	1.81E+04	NA	NA	NA	NA	NA	NA	1.05E+01	7.96E+03
Desert Shrew		2.85E-01	2.85E+00	1.14E+01	3.71E+02	NA	NA	2.30E+03	3.67E+03	4.03E+01	4.77E+01	1.51E-02	1.76E+00
Merriam's Kangaroo Rat		1.24E+01	1.35E+02	6.33E+01	9.29E+02	NA	NA	3.50E+03	5.58E+03	2.33E+01	2.92E+01	1.24E+00	5.37E+02
Desert Kit Fox		2.14E+01	2.14E+02	2.94E+02	4.47E+03	NA	NA	4.13E+04	6.58E+04	1.93E+02	2.28E+02	1.94E+01	2.27E+03

Table 5
Summary of Soil Ecological Comparison Values
Based on Wildlife

Technical Memorandum 3: Ecological Comparison Values for Metals and PAHs in Soil
PG&E Topock
Needles, California

Ecological Receptor	Based on:	Total Chromium		Hexavalent Chromium		Cobalt		Copper		Copper (Allometrically Adjusted)[e]		Lead	
		Soil ECVs (mg/kg dw)		Soil ECVs (mg/kg dw)		Soil ECVs (mg/kg dw)		Soil ECVs (mg/kg dw)		Soil ECVs (mg/kg dw)		Soil ECVs (mg/kg dw)	
		High[d]	Low[c]	Low[c]	High[d]	High[d]	Low[c]	Low[c]	High[d]	High[d]	Low[c]	Low[c]	High[d]
Gambel's Quail	Proposed TRVs[a]	4.79E+02	2.81E+03	NA	NA	1.78E+03	4.28E+03	7.60E+02	2.62E+03	NA	NA	3.42E+02	7.16E+02
Cactus Wren		3.64E+01	2.13E+02	NA	NA	1.93E+02	4.64E+02	3.63E+01	1.09E+02	NA	NA	1.57E+01	3.59E+01
Red-tailed Hawk		5.95E+02	5.21E+03	NA	NA	9.00E+02	1.80E+03	2.00E+03	8.86E+03	NA	NA	3.90E+02	1.18E+03
Desert Shrew		3.63E+01	1.45E+02	1.40E+02	5.86E+02	2.54E+02	6.52E+02	NA	NA	8.69E+01	1.45E+02	6.02E+01	1.31E+02
Merriam's Kangaroo Rat		4.49E+02	1.80E+03	1.73E+03	7.26E+03	2.83E+03	7.26E+03	NA	NA	2.74E+03	5.26E+03	1.67E+03	3.45E+03
Desert Kit Fox		1.05E+03	5.26E+03	5.02E+03	2.51E+04	1.52E+03	3.22E+03	4.72E+03	8.42E+03	NA	NA	3.35E+03	7.05E+03
Gambel's Quail	DTSC-Recommended TRVs[b]	4.79E+02	2.81E+03	NA	NA	1.78E+03	4.28E+03	3.82E+02	1.24E+04	NA	NA	9.85E-01	2.01E+03
Cactus Wren		3.64E+01	2.13E+02	NA	NA	1.93E+02	4.64E+02	2.06E+01	4.69E+02	NA	NA	5.00E-02	1.15E+02
Red-tailed Hawk		5.95E+02	5.21E+03	NA	NA	9.00E+02	1.80E+03	6.65E+02	4.45E+04	NA	NA	1.66E-02	4.66E+03
Desert Shrew		3.63E+01	1.45E+02	1.40E+02	5.86E+02	4.16E+01	6.94E+02	2.46E+01	5.82E+03	NA	NA	9.02E+00	7.20E+03
Merriam's Kangaroo Rat		4.49E+02	1.80E+03	1.73E+03	7.26E+03	4.63E+02	7.72E+03	4.51E+02	3.08E+05	NA	NA	2.58E+02	1.15E+05
Desert Kit Fox		1.05E+03	5.26E+03	5.02E+03	2.51E+04	3.49E+02	3.38E+03	1.88E+03	6.36E+05	NA	NA	4.41E+02	2.34E+05

Table 5
Summary of Soil Ecological Comparison Values
Based on Wildlife

Technical Memorandum 3: Ecological Comparison Values for Metals and PAHs in Soil
PG&E Topock
Needles, California

Ecological Receptor	Based on:	Mercury		Molybdenum		Nickel		Selenium		Selenium (Allomterically Adjusted)[e]		Silver	
		Soil ECVs (mg/kg dw)		Soil ECVs (mg/kg dw)		Soil ECVs (mg/kg dw)		Soil ECVs (mg/kg dw)		Soil ECVs (mg/kg dw)		Soil ECVs (mg/kg dw)	
		High[d]	Low[c]	Low[c]	High[d]	High[d]	Low[c]	Low[c]	High[d]	High[d]	Low[c]	Low[c]	High[d]
Gambel's Quail	Proposed TRVs[a]	3.15E+00	2.48E+01	2.58E+02	2.60E+03	1.44E+03	4.14E+03	1.01E+01	1.90E+01	NA	NA	4.47E+02	4.47E+03
Cactus Wren		1.25E-02	9.13E-01	2.97E+01	3.00E+02	3.18E+01	8.81E+01	1.78E+00	4.40E+00	NA	NA	5.15E+00	5.15E+01
Red-tailed Hawk		2.39E+00	1.10E+01	2.47E+02	2.49E+03	3.54E+03	1.23E+04	5.23E+01	1.85E+02	NA	NA	1.42E+03	1.42E+04
Desert Shrew		2.11E+00	5.89E+02	2.25E+00	2.25E+01	7.76E+00	1.55E+01	NA	NA	1.29E+00	2.17E+00	NA	NA
Merriam's Kangaroo Rat		2.96E+01	1.27E+03	1.15E+01	1.15E+02	4.36E+02	9.57E+02	NA	NA	4.13E+00	5.98E+00	NA	NA
Desert Kit Fox		3.21E+01	5.14E+02	3.81E+01	3.81E+02	1.01E+03	2.39E+03	4.54E+01	8.93E+01	NA	NA	5.32E+03	5.32E+04
Gambel's Quail	DTSC-Recommended TRVs[b]	3.15E+00	2.48E+01	2.58E+02	2.60E+03	2.76E+02	1.29E+04	8.15E+00	2.94E+01	NA	NA	4.47E+02	4.47E+03
Cactus Wren		1.25E-02	9.13E-01	2.97E+01	3.00E+02	6.54E+00	2.67E+02	1.31E+00	8.15E+00	NA	NA	5.15E+00	5.15E+01
Red-tailed Hawk		2.39E+00	1.10E+01	1.41E+02	1.42E+03	3.68E+02	4.27E+04	3.25E+01	3.92E+02	NA	NA	1.42E+03	1.42E+04
Desert Shrew		2.11E+00	5.89E+02	2.25E+00	2.25E+01	6.07E-01	1.44E+02	1.77E-01	1.06E+01	NA	NA	1.44E+01	1.44E+02
Merriam's Kangaroo Rat		2.96E+01	1.27E+03	1.15E+01	1.15E+02	2.19E+01	1.12E+04	1.13E+00	2.05E+01	NA	NA	1.93E+03	1.93E+04
Desert Kit Fox		3.21E+01	5.14E+02	2.24E+01	2.24E+02	2.04E+01	2.86E+04	5.56E+00	9.15E+02	NA	NA	5.32E+03	5.32E+04

Table 5
Summary of Soil Ecological Comparison Values
Based on Wildlife

Technical Memorandum 3: Ecological Comparison Values for Metals and PAHs in Soil
PG&E Topock
Needles, California

Ecological Receptor	Based on:	Silver (Allomterically Adjusted)[e]		Thallium		Vanadium		Zinc		LMW PAHs		HMW PAHs	
		Soil ECVs (mg/kg dw)		Soil ECVs (mg/kg dw)		Soil ECVs (mg/kg dw)		Soil ECVs (mg/kg dw)		Soil ECVs (mg/kg dw)		Soil ECVs (mg/kg dw)	
		High[d]	Low[c]	Low[c]	High[d]	High[d]	Low[c]	Low[c]	High[d]	High[d]	Low[c]	Low[c]	High[d]
Gambel's Quail	Proposed TRVs[a]	NA	NA	8.45E+01	8.45E+02	8.24E+01	1.65E+02	9.26E+03	2.92E+04	5.59E+03	5.68E+04	1.14E+03	1.22E+04
Cactus Wren		NA	NA	2.97E+00	2.97E+01	1.39E+01	2.78E+01	7.57E+01	1.05E+03	3.97E+01	3.97E+02	2.03E+01	2.03E+02
Red-tailed Hawk		NA	NA	3.50E+01	3.50E+02	1.65E+02	3.30E+02	4.76E+04	1.42E+05	2.05E+04	2.05E+05	9.01E+03	9.01E+04
Desert Shrew		2.09E+01	2.09E+02	2.32E+00	6.91E+00	3.31E+02	6.60E+02	8.67E+01	4.72E+03	1.06E+02	5.28E+02	1.16E+00	5.77E+00
Merriam's Kangaroo Rat		2.69E+03	2.69E+04	2.09E+02	6.21E+02	1.75E+03	3.50E+03	8.32E+03	6.08E+04	3.20E+04	1.64E+05	4.32E+01	2.33E+02
Desert Kit Fox		NA	NA	9.69E+01	2.89E+02	2.92E+03	5.83E+03	7.00E+04	2.94E+05	6.62E+04	3.31E+05	6.21E+02	3.10E+03
Gambel's Quail	DTSC-Recommended TRVs[b]	NA	NA	8.45E+01	8.45E+02	8.24E+01	1.65E+02	1.57E+03	2.93E+04	5.59E+03	5.68E+04	1.14E+03	1.22E+04
Cactus Wren		NA	NA	2.97E+00	2.97E+01	1.39E+01	2.78E+01	1.32E+00	1.06E+03	3.97E+01	3.97E+02	2.03E+01	2.03E+02
Red-tailed Hawk		NA	NA	3.50E+01	3.50E+02	1.65E+02	3.30E+02	5.23E+03	1.42E+05	2.05E+04	2.05E+05	9.01E+03	9.01E+04
Desert Shrew		2.09E+01	2.09E+02	4.15E+00	1.24E+01	3.31E+02	6.60E+02	1.64E-01	1.09E+04	8.05E+01	2.41E+02	2.46E+00	6.17E+01
Merriam's Kangaroo Rat		2.69E+03	2.69E+04	2.09E+02	6.21E+02	1.75E+03	3.50E+03	2.82E+02	9.39E+04	2.42E+04	7.42E+04	9.54E+01	2.78E+03
Desert Kit Fox		NA	NA	9.69E+01	2.89E+02	2.92E+03	5.83E+03	4.61E+03	4.08E+05	5.05E+04	1.51E+05	1.32E+03	3.31E+04

Notes:
Selected Final Soil ECV (see Table 6).

[1] Proposed TRVs based primarily on USEPA's EcoSSLs (USEPA, 2008b); from the *Human Health and Ecological Risk Assessment Work Plan* (ARCADIS, 2008).
[2] DTSC-recommended TRVs based primarily on Region 9 Biological Technical Assistance Group (BTAG) TRVs (CalEPA, 2002); from the Risk Assessment Work Plan (ARCADIS, 2008).
[3] Low ECVs based on low TRVs or no-observed adverse effects level (NOAEL) TRVs.
[4] High ECVs based on high TRVs or lowest-observed adverse effects level (LOAEL) TRVs.
[5] TRVs allometrically adjusted for representative receptors (ARCADIS, 2008).

CalEPA - California Environmental Protection Agency
DTSC - Department of Toxic Substance Control
ECV - ecological comparison value
HMW PAHs - high molecular weight polycyclic aromatic hydrocarbons
LMW PAHs - low molecular weight polycyclic aromatic hydrocarbons
mg/kg dw - milligrams per kilogram dry weight
NA - not available
TRV - toxocity reference values
USEPA - U.S. Environmental Protection Agency

Table 6
Summary of Selected Soil Ecological Comparison Values

Technical Memorandum 3: Ecological Comparison Values for Metals and PAHs in Soil
PG&E Topock
Needles, California

Constituent	Lowest Wildlife ECV (mg/kg)	Based On	Lowest Plant/Invertebrate ECV (mg/kg)	Based On	Selected Final Soil ECV[a] (mg/kg)	Based On
Antimony	0.285	Desert Shrew	5	Plant*	0.285	Desert Shrew
Arsenic	11.4	Desert Shrew	18	Plant	11.4	Desert Shrew
Barium	2,299	Desert Shrew	330	Invertebrate	330	Invertebrate
Beryllium	23.3	Merriam's Kangaroo Rat	10	Plant*	23.3	Merriam's Kangaroo Rat
Cadmium	0.0151	Desert Shrew	32	Plant	0.0151	Desert Shrew
Trivalent Chromium	NA	NA	NA	NA	NA	NA
Hexavalent Chromiu	139.6	Desert Shrew	0.4	Invertebrate**	139.6	Desert Shrew
Total Chromium	36.3	Desert Shrew	NA	NA	36.3	Desert Shrew
Cobalt	41.6	Desert Shrew	13	Plant	13	Plant
Copper	20.6	Cactus Wren	70	Plant	20.6	Cactus Wren
Lead	0.0166	Red-tailed Hawk	120	Plant	0.0166	Red-tailed Hawk
Manganese	NA	NA	220	Plant	220	Plant
Mercury	0.0125	Cactus Wren	0.1	Invertebrate**	0.0125	Cactus Wren
Molybdenum	2.25	Desert Shrew	2	Plant*	2.25	Desert Shrew
Nickel	0.607	Desert Shrew	38	Plant	0.607	Desert Shrew
Selenium	0.177	Desert Shrew	0.52	Plant	0.177	Desert Shrew
Silver	5.15	Cactus Wren	560	Plant	5.15	Cactus Wren
Thallium	2.32	Desert Shrew	1	Plant*	2.32	Desert Shrew
Vanadium	13.9	Cactus Wren	2	Plant	13.9	Cactus Wren
Zinc	0.164	Desert Shrew	120	Invertebrate	0.164	Desert Shrew
LMW PAHs	39.7	Cactus Wren	10	Plant	10	Plant
HMW PAHs	1.16	Desert Shrew	1.2	Plant	1.16	Desert Shrew

Notes:

*Confidence in this benchmark is low due to the low number of studies on which it is based or other factors. The soil type and test species (typically agricultural) may also vary significantly from site-specific conditions, or the toxic effects may be uncertain.

**Confidence in this benchmark is low due to the low number of studies on which it is based or other factors. The tests were conducted with earthworms.

a. The final soil ECV selected based on minimum of soil ECVs based on plants and invertebrates and wildlife. If the minimum soil ECV was based toxicity valu low confidence, then the next minimum soil ECV was selected.

ECV - ecological comparison value
HMW PAHs - high molecular weight polycyclic aromatic hydrocarbons
LMW PAHs - low molecular weight polycyclic aromatic hydrocarbons
mg/kg dw - miligrams per kilogram dry weight
NA - not available

ARCADIS

Figures

Figure 1. Diagram Depicting ECV Derivation Methodology for the Desert Shrew

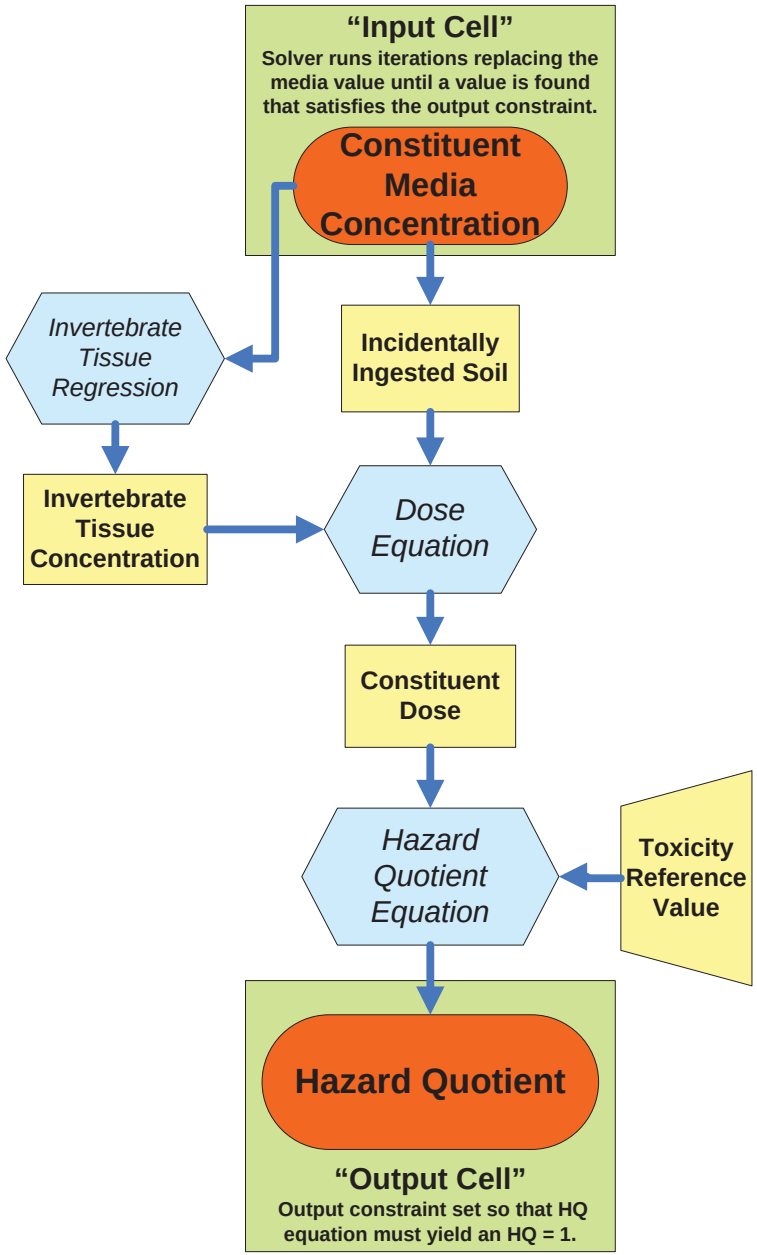

Formulae and Variables Description

Invertebrate Tissue Regression Equation

$$\ln(C_{tissue}) = a + b[\ln(C_{soil})] \quad \therefore \quad C_{tissue} = e^{a} \times (C_{soil})^{b}$$

Dose Equation

$$Dose = \frac{((C_{soil} \times SIR) + (C_{soil} \times BAF \times FIR)) \times SUF}{BW}$$

Hazard Quotient Equation

$$HQ = \frac{Dose}{TRV}$$

ECV Equation

$$ECV = C_{Soil} = \frac{HQ \times TRV \times BW}{(SIR + [FIR \times BAF]) \times SUF}$$

Where:

C_{tissue}	= concentration of constituent in biota or tissue (milligrams of constituent per kilogram tissue [mg/kg tissue])
a	= compound specific regression equation constant (unitless)
b	= compound specific regression equation constant (unitless)
C_{soil}	= concentration of constituent in exposure soil (mg/kg soil)
Dose	= daily exposure dose of constituent resulting from ingestion of media and invertebrates (milligrams per kilogram body weight per day [mg/kgBW-day])
SIR	= soil ingestion rate (kilograms soil per day [kg soil/day])
BAF	= bioaccumulation factor (kg soil/kg tissue)
FIR	= food or biota ingestion rate (kilograms tissue per day [kg tissue/ day])
SUF	= site use factor (unitless)
BW	= body weight of receptor (kilograms [kgBW])
HQ	= hazard quotient (unitless); set at target of 1
TRV	= toxicity reference value (milligrams per kilogram body weight per day)
ECV	= ecological comparison value (mg/kg soil)

ARCADIS

Attachment 1

Table A-1
Ecological Comparison Values Based on Gambel's Quail and Proposed TRVs

Technical Memorandum 3: Ecological Comparison Values for Metals and PAHs in Soil
PG&E Topock
Needles, California

Protective Media Concentrations (mg/kg)	Antimony mg/kg (dw)		Arsenic mg/kg (dw)		Barium mg/kg (dw)		Beryllium mg/kg (dw)		Cadmium mg/kg (dw)		Chromium mg/kg (dw)		Hexavalent Chromium mg/kg (dw)	
	Low[4]	High[4]	Low[4]	High[4]	Low[4]	High[4]	Low[4]	High[4]	Low[4]	High[4]	Low[4]	High[4]	Low[4]	High[4]
Sitewide ECVs														
Soil	NA	NA	4.1E+02	6.5E+02	NA	NA	NA	NA	2.5E+02	1.3E+03	4.8E+02	2.8E+03	NA	NA
Plant tissue	NA	NA	1.5E+01	2.5E+01	NA	NA	NA	NA	1.3E+01	3.1E+01	2.0E+01	1.2E+02	NA	NA
Invertebrate tissue	NA	NA	0.0E+00	0.0E+00	NA	NA	NA	NA	0.0E+00	0.0E+00	0.0E+00	0.0E+00	NA	NA
Prey (mammal) tissue	NA	NA	0.0E+00	0.0E+00	NA	NA	NA	NA	0.0E+00	0.0E+00	0.0E+00	0.0E+00	NA	NA
Bioaccumulation Factors (BAFs)[1]														
Soil-to-Plants	ln(Cp) = 0.938 * ln(Cs) - 3.233		3.8E-02		1.6E-01		ln(Cp) = 0.7345 * ln(Cs) - 0.5361		ln(Cp) = 0.546 * ln(Cs) - 0.475		4.1E-02		4.1E-02	
Soil-to-Invertebrates	--		--		--		--		--		--		--	
Soil-to-Mammals	--		--		--		--		--		--		--	
Dose Calulations for Target Hazard Quotients (HQs)[2]														
	Low	**High**	**Low**	**High**	**Low**	**High**	**Low**	**High**	**Low**	**High**	**Low**	**High**	**Low**	**High**
Dose = TRV	NA	NA	2.2E+00	3.5E+00	NA	NA	NA	NA	1.5E+00	6.4E+00	2.7E+00	1.6E+01	NA	NA
HQ	NA	NA	1.0E+00	1.0E+00	NA	NA	NA	NA	1.0E+00	1.0E+00	1.0E+00	1.0E+00	NA	NA

Exposure Paramater[3]	value	units
Food Ingestion Rate (FIR	0.00649	kg tissue/day
Soil Ingestion Rate (SIR)	0.0006750	kg soil/day
Plant Ingestion Fraction (F_{food})	100%	Percent
Invertebrate Ingestion Fraction (F_{food})	0%	Percent
Mammal Ingestion Fraction (F_{food})	0%	Percent
Home Range	35.7	Acres
Site Use Factor (SUF)	1.00	Unitless
Body Weight (BW)	0.1693	kgBW

Microsoft Solver used to calculate ECVs based one re-arranging the standard HQ equation (USEPA, 1997) below:

$$ECV = \frac{HQ \times TRV}{Dose} = \left(\frac{1 \times TRV \times BW}{SIR + (FIR \times BAF) \times SUF} \right)$$

Notes:

soil ECV.

1 bioaccumulation factors (BAFs; kilograms soil per kilogram tissue [kg soil/kg tissue]); from Table 2.

2 exposure parameters from Table 6-3 of the *Human Health and Ecological Risk Assessment Work Plan* (ARCADIS, 2008).

3 dose caluated for a target HQ of 1 (NOAEL and LOAEL based).

4 Low and High ECVs based on low and high TRVs (from Table 3), respectively.

ECV	ecological comparison value for soil.
dw	dry weight.
High	lowest-observed adverse effects level (LOAEL).
HMW PAHs	high molecular weight polycyclic aromatic hydrocarbons.
kg	kilograms.
kg/day	kilograms per day.
LMW PAHs	low molecular weight polycyclic aromatic hydrocarbons.
Low	no-observed adverse effects level (NOAEL).
mg/kg	milligrams per kilogram.
mg/kgBW-day	milligrams per kilogram body weight per day.
NA	not available or not applicable.

Table A-1
Ecological Comparison Values Based on Gambel's Quail and Proposed TRVs

Technical Memorandum 3: Ecological Comparison Values for Metals and PAHs in Soil
PG&E Topock
Needles, California

Protective Media Concentrations (mg/kg)	Cobalt mg/kg (dw)		Copper mg/kg (dw)		Lead mg/kg (dw)		Mercury mg/kg (dw)		Molybdenum mg/kg (dw)		Nickel mg/kg (dw)		Selenium mg/kg (dw)	
	Low[4]	High[4]	Low[4]	High[4]	Low[4]	High[4]	Low[4]	High[4]	Low[4]	High[4]	Low[4]	High[4]	Low[4]	High[4]
Sitewide ECVs														
Soil	1.8E+03	4.3E+03	7.6E+02	2.6E+03	3.4E+02	7.2E+02	3.2E+00	2.5E+01	2.6E+02	2.6E+03	1.4E+03	4.1E+03	1.0E+01	1.9E+01
Plant tissue	1.3E+01	3.2E+01	2.7E+01	4.3E+01	7.0E+00	1.1E+01	6.9E-01	2.1E+00	6.4E+01	6.5E+02	2.5E+01	5.5E+01	6.5E+00	1.3E+01
Invertebrate tissue	0.0E+00	0.0E+00	0.0E+00	0.0E+00	0.0E+00	0.0E+00	0.0E+00	0.0E+00	0.0E+00	0.0E+00	0.0E+00	0.0E+00	0.0E+00	0.0E+00
Prey (mammal) tissue	0.0E+00	0.0E+00	0.0E+00	0.0E+00	0.0E+00	0.0E+00	0.0E+00	0.0E+00	0.0E+00	0.0E+00	0.0E+00	0.0E+00	0.0E+00	0.0E+00
Bioaccumulation Factors (BAFs)[1]														
Soil-to-Plants	7.5E-03		ln(Cp) = 0.394 * ln(Cs) + 0.668		ln(Cp) = 0.561 * ln(Cs) - 1.328		ln(Cp) = 0.544 * ln(Cs) - 0.996		2.5E-01		ln(Cp) = 0.748 * ln(Cs) - 2.223		ln(Cp) = 1.104 * ln(Cs) - 0.677	
Soil-to-Invertebrates	--		--		--		--		--		--		--	
Soil-to-Mammals	--		--		--		--		--		--		--	
Dose Calulations for Target Hazard Quotients (HQs)[2]														
	Low	**High**	**Low**	**High**	**Low**	**High**	**Low**	**High**	**Low**	**High**	**Low**	**High**	**Low**	**High**
Dose = TRV	7.6E+00	1.8E+01	4.1E+00	1.2E+01	1.6E+00	3.3E+00	3.9E-02	1.8E-01	3.5E+00	3.5E+01	6.7E+00	1.9E+01	2.9E-01	5.8E-01
HQ	1.0E+00	1.0E+00	1.0E+00	1.0E+00	1.0E+00	1.0E+00	1.0E+00	1.0E+00	1.0E+00	1.0E+00	1.0E+00	1.0E+00	1.0E+00	1.0E+00

Table A-1
Ecological Comparison Values Based on Gambel's Quail and Proposed TRVs

Technical Memorandum 3: Ecological Comparison Values for Metals and PAHs in Soil
PG&E Topock
Needles, California

Protective Media Concentrations (mg/kg)	Silver mg/kg (dw)		Thallium mg/kg (dw)		Vanadium mg/kg (dw)		Zinc mg/kg (dw)		LMW PAHs mg/kg (dw)		HMW PAHs mg/kg (dw)	
	Low[4]	High[4]	Low[4]	High[4]	Low[4]	High[4]	Low[4]	High[4]	Low[4]	High[4]	Low[4]	High[4]
Sitewide ECVs												
Soil	4.5E+02	4.5E+03	8.5E+01	8.5E+02	8.2E+01	1.6E+02	9.3E+03	2.9E+04	5.6E+03	5.7E+04	1.1E+03	1.2E+04
Plant tissue	6.3E+00	6.3E+01	3.4E-01	3.4E+00	4.0E-01	8.0E-01	7.6E+02	1.4E+03	1.3E+01	3.9E+01	1.4E+02	1.3E+03
Invertebrate tissue	0.0E+00	0.0E+00	0.0E+00	0.0E+00	0.0E+00	0.0E+00	0.0E+00	0.0E+00	0.0E+00	0.0E+00	0.0E+00	0.0E+00
Prey (mammal) tissue	0.0E+00	0.0E+00	0.0E+00	0.0E+00	0.0E+00	0.0E+00	0.0E+00	0.0E+00	0.0E+00	0.0E+00	0.0E+00	0.0E+00
Bioaccumulation Factors (BAFs)[1]												
Soil-to-Plants	1.4E-02		4.0E-03		4.9E-03		ln(Cp) = 0.554 * ln(Cs) + 1.575		ln(Cp) = 0.4544 * ln(Cs)-1.3205		ln(Cp) = 0.9469 * ln(Cs)-1.7026	
Soil-to-Invertebrates	--		--		--		--		--		--	
Soil-to-Mammals	--		--		--		--		--		--	
Dose Calulations for Target Hazard Quotients (HQs)[2]												
	Low	**High**	**Low**	**High**	**Low**	**High**	**Low**	**High**	**Low**	**High**	**Low**	**High**
Dose = TRV	2.0E+00	2.0E+01	3.5E-01	3.5E+00	3.4E-01	6.9E-01	6.6E+01	1.7E+02	2.3E+01	2.3E+02	1.0E+01	1.0E+02
HQ	1.0E+00	1.0E+00	1.0E+00	1.0E+00	1.0E+00	1.0E+00	1.0E+00	1.0E+00	1.0E+00	1.0E+00	1.0E+00	1.0E+00

Table A-2
Ecological Comparison Values Based on the Cactus Wren and Proposed TRVs

Technical Memorandum 3: Ecological Comparison Values for Metals and PAHs in Soil
PG&E Topock
Needles, California

Protective Media Concentrations (mg/kg)	Antimony mg/kg (dw)		Arsenic mg/kg (dw)		Barium mg/kg (dw)		Beryllium mg/kg (dw)		Cadmium mg/kg (dw)		Chromium mg/kg (dw)		Hexavalent Chromium mg/kg (dw)	
	Low[4]	High[4]	Low[4]	High[4]	Low[4]	High[4]	Low[4]	High[4]	Low[4]	High[4]	Low[4]	High[4]	Low[4]	High[4]
Sitewide ECVs														
Soil	NA	NA	7.6E+01	1.3E+02	NA	NA	NA	NA	9.5E-01	5.9E+00	3.6E+01	2.1E+02	NA	NA
Plant tissue	NA	NA	0.0E+00	0.0E+00	NA	NA	NA	NA	0.0E+00	0.0E+00	0.0E+00	0.0E+00	NA	NA
Invertebrate tissue	NA	NA	5.1E+00	7.4E+00	NA	NA	NA	NA	7.9E+00	3.4E+01	1.1E+01	6.5E+01	NA	NA
Prey (mammal) tissue	NA	NA	0.0E+00	0.0E+00	NA	NA	NA	NA	0.0E+00	0.0E+00	0.0E+00	0.0E+00	NA	NA
Bioaccumulation Factors (BAFs)[1]														
Soil-to-Plants	--		--		--		--		--		--		--	
Soil-to-Invertebrates	1.0E+00		ln(Ci) = 0.706 * ln(Cs) - 1.421		9.1E-02		4.5E-02		ln(Ci) = 0.795 * ln(Cs) + 2.114		3.1E-01		3.1E-01	
Soil-to-Mammals	--		--		--		--		--		--		--	
Dose Calulations for Target Hazard Quotients (HQs)[2]														
	Low	**High**	**Low**	**High**	**Low**	**High**	**Low**	**High**	**Low**	**High**	**Low**	**High**	**Low**	**High**
Dose = TRV	NA	NA	2.2E+00	3.6E+00	NA	NA	NA	NA	1.5E+00	6.4E+00	2.7E+00	1.6E+01	NA	NA
HQ	NA	NA	1.0E+00	1.0E+00	NA	NA	NA	NA	1.0E+00	1.0E+00	1.0E+00	1.0E+00	NA	NA

Exposure Paramater[3]	value	units
Food Ingestion Rate (FIR	0.00713	kg tissue/day
Soil Ingestion Rate (SIR)	0.0006631	kg soil/day
Plant Ingestion Fraction (F_{food})	0%	Percent
Invertebrate Ingestion Fraction (F_{food})	100%	Percent
Mammal Ingestion Fraction (F_{food})	0%	Percent
Home Range	4.8	Acres
Site Use Factor (SUF)	1.00	Unitless
Body Weight (BW)	0.0389	kgBW

Microsoft Solver used to calculate ECVs based one re-arranging the standard HQ equation (USEPA, 1997) below:

$$ECV = \frac{HQ \times TRV}{Dose} = \left(\frac{1 \times TRV \times BW}{SIR + (FIR \times BAF) \times SUF} \right)$$

Notes:

soil ECV.

1 bioaccumulation factors (BAFs; kilograms soil per kilogram tissue [kg soil/kg tissue]); from Table 2.

2 exposure parameters from Table 6-3 of the *Human Health and Ecological Risk Assessment Work Plan* (ARCADIS, 2008).

3 dose caluated for a target HQ of 1 (NOAEL and LOAEL based).

4 Low and High ECVs based on low and high TRVs (from Table 3), respectively.

ECV	ecological comparison value for soil.
dw	dry weight.
High	lowest-observed adverse effects level (LOAEL).
HMW PAHs	high molecular weight polycyclic aromatic hydrocarbons.
kg	kilograms.
kg/day	kilograms per day.
LMW PAHs	low molecular weight polycyclic aromatic hydrocarbons.
Low	no-observed adverse effects level (NOAEL).
mg/kg	milligrams per kilogram.
mg/kgBW-day	milligrams per kilogram body weight per day.
NA	not available or not applicable.

Table A-2
Ecological Comparison Values Based on the Cactus Wren and Proposed TRVs

Technical Memorandum 3: Ecological Comparison Values for Metals and PAHs in Soil
PG&E Topock
Needles, California

Protective Media Concentrations (mg/kg)	Cobalt mg/kg (dw)		Copper mg/kg (dw)		Lead mg/kg (dw)		Mercury mg/kg (dw)		Molybdenum mg/kg (dw)		Nickel mg/kg (dw)		Selenium mg/kg (dw)	
	Low[4]	High[4]	Low[4]	High[4]	Low[4]	High[4]	Low[4]	High[4]	Low[4]	High[4]	Low[4]	High[4]	Low[4]	High[4]
Sitewide ECVs														
Soil	1.9E+02	4.6E+02	3.6E+01	1.1E+02	1.6E+01	3.6E+01	1.3E-02	9.1E-01	3.0E+01	3.0E+02	3.2E+01	8.8E+01	1.8E+00	4.4E+00
Plant tissue	0.0E+00	0.0E+00	0.0E+00	0.0E+00	0.0E+00	0.0E+00	0.0E+00	0.0E+00	0.0E+00	0.0E+00	0.0E+00	0.0E+00	0.0E+00	0.0E+00
Invertebrate tissue	2.4E+01	5.7E+01	1.9E+01	5.6E+01	7.4E+00	1.4E+01	2.1E-01	9.0E-01	1.6E+01	1.6E+02	3.4E+01	9.3E+01	1.4E+00	2.7E+00
Prey (mammal) tissue	0.0E+00	0.0E+00	0.0E+00	0.0E+00	0.0E+00	0.0E+00	0.0E+00	0.0E+00	0.0E+00	0.0E+00	0.0E+00	0.0E+00	0.0E+00	0.0E+00
Bioaccumulation Factors (BAFs)[1]														
Soil-to-Plants	--		--		--		--		--		--		--	
Soil-to-Invertebrates	1.2E-01		5.2E-01		ln(Ci) = 0.807 * ln(Cs) - 0.218		ln(Ci) = 0.3369 * ln(Cs) - 0.078		5.5E-01		1.1E+00		ln(Ci) = 0.733 * ln(Cs) - 0.075	
Soil-to-Mammals	--		--		--		--		--		--		--	
Dose Calulations for Target Hazard Quotients (HQs)[2]														
	Low	**High**	**Low**	**High**	**Low**	**High**	**Low**	**High**	**Low**	**High**	**Low**	**High**	**Low**	**High**
Dose = TRV	7.6E+00	1.8E+01	4.0E+00	1.2E+01	1.6E+00	3.3E+00	3.9E-02	1.8E-01	3.5E+00	3.5E+01	6.7E+00	1.9E+01	2.9E-01	5.8E-01
HQ	1.0E+00	1.0E+00	1.0E+00	1.0E+00	1.0E+00	1.0E+00	1.0E+00	1.0E+00	1.0E+00	1.0E+00	1.0E+00	1.0E+00	1.0E+00	1.0E+00

Table A-2
Ecological Comparison Values Based on the Cactus Wren and Proposed TRVs

Technical Memorandum 3: Ecological Comparison Values for Metals and PAHs in Soil
PG&E Topock
Needles, California

Protective Media Concentrations (mg/kg)	Silver mg/kg (dw)		Thallium mg/kg (dw)		Vanadium mg/kg (dw)		Zinc mg/kg (dw)		LMW PAHs mg/kg (dw)		HMW PAHs mg/kg (dw)	
	Low[4]	High[4]	Low[4]	High[4]	Low[4]	High[4]	Low[4]	High[4]	Low[4]	High[4]	Low[4]	High[4]
Sitewide ECVs												
Soil	5.2E+00	5.2E+01	3.0E+00	3.0E+01	1.4E+01	2.8E+01	7.6E+01	1.0E+03	4.0E+01	4.0E+02	2.0E+01	2.0E+02
Plant tissue	0.0E+00	0.0E+00	0.0E+00	0.0E+00	0.0E+00	0.0E+00	0.0E+00	0.0E+00	0.0E+00	0.0E+00	0.0E+00	0.0E+00
Invertebrate tissue	1.1E+01	1.1E+02	1.6E+00	1.6E+01	5.8E-01	1.2E+00	3.5E+02	8.4E+02	1.2E+02	1.2E+03	5.3E+01	5.3E+02
Prey (mammal) tissue	0.0E+00	0.0E+00	0.0E+00	0.0E+00	0.0E+00	0.0E+00	0.0E+00	0.0E+00	0.0E+00	0.0E+00	0.0E+00	0.0E+00
Bioaccumulation Factors (BAFs)[1]												
Soil-to-Plants	--		--		--		--		--		--	
Soil-to-Invertebrates	2.0E+00		5.5E-01		4.2E-02		ln(Ci) = 0.328 * ln(Cs) + 4.449		3.0E+00		2.6E+00	
Soil-to-Mammals	--		--		--		--		--		--	
Dose Calulations for Target Hazard Quotients (HQs)[2]												
	Low	**High**	**Low**	**High**	**Low**	**High**	**Low**	**High**	**Low**	**High**	**Low**	**High**
Dose = TRV	2.0E+00	2.0E+01	3.5E-01	3.5E+00	3.4E-01	6.9E-01	6.6E+01	1.7E+02	2.3E+01	2.3E+02	1.0E+01	1.0E+02
HQ	1.0E+00	1.0E+00	1.0E+00	1.0E+00	1.0E+00	1.0E+00	1.0E+00	1.0E+00	1.0E+00	1.0E+00	1.0E+00	1.0E+00

Table A-3
Ecological Comparison Values Based on Red Tailed Hawk and Proposed TRVs

Technical Memorandum 3: Ecological Comparison Values for Metals and PAHs in Soil
PG&E Topock
Needles, California

Protective Media Concentrations (mg/kg)	Antimony mg/kg (dw)		Arsenic mg/kg (dw)		Barium mg/kg (dw)		Beryllium mg/kg (dw)		Cadmium mg/kg (dw)		Chromium mg/kg (dw)		Hexavalent Chromium mg/kg (dw)	
	Low[5]	High[5]	Low[5]	High[5]	Low[5]	High[5]	Low[5]	High[5]	Low[5]	High[5]	Low[5]	High[5]	Low[5]	High[5]
Sitewide ECVs														
Soil	NA	NA	1.8E+03	2.8E+03	NA	NA	NA	NA	8.4E+02	4.6E+03	5.9E+02	5.2E+03	NA	NA
Plant tissue	NA	NA	0.0E+00	0.0E+00	NA	NA	NA	NA	0.0E+00	0.0E+00	0.0E+00	0.0E+00	NA	NA
Invertebrate tissue	NA	NA	0.0E+00	0.0E+00	NA	NA	NA	NA	0.0E+00	0.0E+00	0.0E+00	0.0E+00	NA	NA
Prey (mammal) tissue	NA	NA	3.6E+00	5.3E+00	NA	NA	NA	NA	6.8E+00	1.5E+01	2.5E+01	1.2E+02	NA	NA
Bioaccumulation Factors (BAFs)[1]														
Soil-to-Plants	--		--		--		--		--		--		--	
Soil-to-Invertebrates	--		--		--		--		--		--		--	
Soil-to-Mammals	0.05 * Cd		ln(Cm) = 0.8188 * ln(Cs) -4.8471		0.0075 * Cd		0.05 * Cd		ln(Cm) = 0.4723 * ln(Cs) - 1.2571		ln(Cm) = 0.7338 * ln(Cs) - 1.4599		ln(Cm) = 0.7338 * ln(Cs) - 1.4599	
Dose Calulations for Target Hazard Quotients (HQs)[2]														
	Low	High	Low	High	Low	High	Low	High	Low	High	Low	High	Low	High
Dose = TRV	NA	NA	2.2E+00	3.6E+00	NA	NA	NA	NA	1.5E+00	6.4E+00	2.7E+00	1.6E+01	NA	NA
HQ	NA	NA	1.0E+00	1.0E+00	NA	NA	NA	NA	1.0E+00	1.0E+00	1.0E+00	1.0E+00	NA	NA

Exposure Paramater[3]	value	units
Food Ingestion Rate (FIR	0.08990	kg tissue/day
Soil Ingestion Rate (SIR)	0.0012586	kg soil/day
Plant Ingestion Fraction (F_{food})	0%	Percent
Invertebrate Ingestion Fraction (F_{food})	0%	Percent
Mammal Ingestion Fraction (F_{food})	100%	Percent
Home Range	2471	Acres
Site Use Factor (SUF)	1.00	Unitless
Body Weight (BW)	1.134	kgBW

Microsoft Solver used to calculate ECVs based one re-arranging the standard HQ equation (USEPA, 1997) below:

$$ECV = \frac{HQ \times TRV}{Dose} = \left(\frac{1 \times TRV \times BW}{SIR + (FIR \times BAF) \times SUF} \right)$$

Notes:

soil ECV.

1 bioaccumulation factors (BAFs; kilograms soil per kilogram tissue [kg soil/kg tissue]); from Table 2.

2 exposure parameters from Table 6-3 of the *Human Health and Ecological Risk Assessment Work Plan* (ARCADIS, 2008).

3 dose caluated for a target HQ of 1 (NOAEL and LOAEL based).

4 Low and High ECVs based on low and high TRVs (from Table 3), respectively.

ECV	ecological comparison value for soil.
dw	dry weight.
High	lowest-observed adverse effects level (LOAEL).
HMW PAHs	high molecular weight polycyclic aromatic hydrocarbons.
kg	kilograms.
kg/day	kilograms per day.
LMW PAHs	low molecular weight polycyclic aromatic hydrocarbons.
Low	no-observed adverse effects level (NOAEL).
mg/kg	milligrams per kilogram.
mg/kgBW-day	milligrams per kilogram body weight per day.
NA	not available or not applicable.

Table A-3
Ecological Comparison Values Based on Red Tailed Hawk and Proposed TRVs

Technical Memorandum 3: Ecological Comparison Values for Metals and PAHs in Soil
PG&E Topock
Needles, California

Protective Media Concentrations (mg/kg)	Cobalt mg/kg (dw)		Copper mg/kg (dw)		Lead mg/kg (dw)		Mercury mg/kg (dw)		Molybdenum[4] mg/kg (dw)		Nickel mg/kg (dw)		Selenium mg/kg (dw)	
	Low[5]	High[5]	Low[5]	High[5]	Low[5]	High[5]	Low[5]	High[5]	Low[5]	High[5]	Low[5]	High[5]	Low[5]	High[5]
Sitewide ECVs														
Soil	9.0E+02	1.8E+03	2.0E+03	8.9E+03	3.9E+02	1.2E+03	2.4E+00	1.1E+01	2.5E+02	2.5E+03	3.5E+03	1.2E+04	5.2E+01	1.9E+02
Plant tissue	0.0E+00	0.0E+00	0.0E+00	0.0E+00	0.0E+00	0.0E+00	0.0E+00	0.0E+00	0.0E+00	0.0E+00	0.0E+00	0.0E+00	0.0E+00	0.0E+00
Invertebrate tissue	0.0E+00	0.0E+00	0.0E+00	0.0E+00	0.0E+00	0.0E+00	0.0E+00	0.0E+00	0.0E+00	0.0E+00	0.0E+00	0.0E+00	0.0E+00	0.0E+00
Prey (mammal) tissue	8.3E+01	2.1E+02	2.3E+01	2.9E+01	1.5E+01	2.5E+01	4.6E-01	2.1E+00	4.1E+01	4.1E+02	3.5E+01	6.3E+01	2.9E+00	4.7E+00
Bioaccumulation Factors (BAFs)[1]														
Soil-to-Plants	--		--		--		--		--		--		--	
Soil-to-Invertebrates	--		--		--		--		--		--		--	
Soil-to-Mammals	ln(Cm) = 1.307 * ln(Cs) - 4.4669		ln(Cm) = 0.1444 * ln(Cs) + 2.042		n(Cm) = 0.4422 * ln(Cs) + 0.0761		1.9E-01		0.006 * 50 * Cd		ln(Cm) = 0.4658 * ln(Cs) - 0.2462		n(Cm) = 0.3764 * ln(Cs) - 0.415	
Dose Calulations for Target Hazard Quotients (HQs)[2]					**0.0E+00**									
	Low	**High**	**Low**	**High**	**Low**	**High**	**Low**	**High**	**Low**	**High**	**Low**	**High**	**Low**	**High**
Dose = TRV	7.6E+00	1.8E+01	4.1E+00	1.2E+01	1.6E+00	3.3E+00	3.9E-02	1.8E-01	3.5E+00	3.5E+01	6.7E+00	1.9E+01	2.9E-01	5.8E-01
HQ	1.0E+00	1.0E+00	1.0E+00	1.0E+00	1.0E+00	1.0E+00	1.0E+00	1.0E+00	1.0E+00	1.0E+00	1.0E+00	1.0E+00	1.0E+00	1.0E+00

Table A-3
Ecological Comparison Values Based on Red Tailed Hawk and Proposed TRVs

Technical Memorandum 3: Ecological Comparison Values for Metals and PAHs in Soil
PG&E Topock
Needles, California

Protective Media Concentrations (mg/kg)	Silver mg/kg (dw)		Thallium mg/kg (dw)		Vanadium mg/kg (dw)		Zinc mg/kg (dw)		LMW PAHs mg/kg (dw)		HMW PAHs mg/kg (dw)	
	Low[5]	High[5]	Low[5]	High[5]	Low[5]	High[5]	Low[5]	High[5]	Low[5]	High[5]	Low[5]	High[5]
Sitewide ECVs												
Soil	1.4E+03	1.4E+04	3.5E+01	3.5E+02	1.6E+02	3.3E+02	4.8E+04	1.4E+05	2.1E+04	2.1E+05	9.0E+03	9.0E+04
Plant tissue	0.0E+00	0.0E+00	0.0E+00	0.0E+00	0.0E+00	0.0E+00	0.0E+00	0.0E+00	0.0E+00	0.0E+00	0.0E+00	0.0E+00
Invertebrate tissue	0.0E+00	0.0E+00	0.0E+00	0.0E+00	0.0E+00	0.0E+00	0.0E+00	0.0E+00	0.0E+00	0.0E+00	0.0E+00	0.0E+00
Prey (mammal) tissue	5.7E+00	5.7E+01	3.9E+00	3.9E+01	2.0E+00	4.1E+00	1.7E+02	1.8E+02	0.0E+00	0.0E+00	0.0E+00	0.0E+00
Bioaccumulation Factors (BAFs)[1]												
Soil-to-Plants	--		--		--		--		--		--	
Soil-to-Invertebrates	--		--		--		--		--		--	
Soil-to-Mammals	4.0E-03		1.1E-01		1.2E-02		ln(Cm) = 0.0706 * ln(Cs) + 4.3632		0.0E+00		0.0E+00	
Dose Calulations for Target Hazard Quotients (HQs)[2]												
	Low	**High**	**Low**	**High**	**Low**	**High**	**Low**	**High**	**Low**	**High**	**Low**	**High**
Dose = TRV	2.0E+00	2.0E+01	3.5E-01	3.5E+00	3.4E-01	6.9E-01	6.6E+01	1.7E+02	2.3E+01	2.3E+02	1.0E+01	1.0E+02
HQ	1.0E+00	1.0E+00	1.0E+00	1.0E+00	1.0E+00	1.0E+00	1.0E+00	1.0E+00	1.0E+00	1.0E+00	1.0E+00	1.0E+00

Table A-4
Ecological Comparison Values Based on Desert Shrew and Proposed TRVs

Technical Memorandum 3: Ecological Comparison Values for Metals and PAHs in Soil
PG&E Topock
Needles, California

Protective Media Concentrations (mg/kg)	Antimony mg/kg (dw)		Arsenic mg/kg (dw)		Barium mg/kg (dw)		Beryllium mg/kg (dw)		Cadmium mg/kg (dw)		Chromium mg/kg (dw)		Hexavalent Chromium mg/kg (dw)	
	Low[4]	High[4]	Low[4]	High[4]	Low[4]	High[4]	Low[4]	High[4]	Low[4]	High[4]	Low[4]	High[4]	Low[4]	High[4]
Sitewide ECVs														
Soil	2.8E-01	2.8E+00	8.9E+01	1.6E+02	2.3E+03	3.7E+03	4.0E+01	4.8E+01	3.7E-01	6.8E+00	3.6E+01	1.5E+02	1.4E+02	5.9E+02
Plant tissue	0.0E+00	0.0E+00	0.0E+00	0.0E+00	0.0E+00	0.0E+00	0.0E+00	0.0E+00	0.0E+00	1.8E+00	0.0E+00	0.0E+00	0.0E+00	0.0E+00
Invertebrate tissue	2.8E-01	2.8E+00	5.7E+00	8.8E+00	2.1E+02	3.3E+02	1.8E+00	2.1E+00	3.8E+00	3.8E+01	1.1E+01	4.4E+01	42.724563	1.8E+02
Prey (mammal) tissue	0.0E+00	0.0E+00	0.0E+00	0.0E+00	0.0E+00	0.0E+00	0.0E+00	0.0E+00	0.0E+00	0.0E+00	0.0E+00	0.0E+00	0.0E+00	0.0E+00
Bioaccumulation Factors (BAFs)[1]														
Soil-to-Plants	--		--		--		--		--		--		--	
Soil-to-Invertebrates	1.0E+00		ln(Ci) = 0.706 * ln(Cs) - 1.421		9.1E-02		4.5E-02		ln(Ci) = 0.795 * ln(Cs) + 2.114		3.1E-01		3.1E-01	
Soil-to-Mammals	--		--		--		--		--		--		--	
Dose Calulations for Target Hazard Quotients (HQs)[2]														
	Low	High	Low	High	Low	High	Low	High	Low	High	Low	High	Low	High
Dose = TRV	5.9E-02	5.9E-01	1.5E+00	2.4E+00	5.2E+01	8.3E+01	5.3E-01	6.3E-01	7.7E-01	7.7E+00	2.4E+00	9.6E+00	9.2E+00	3.9E+01
HQ	1.0E+00	1.0E+00	1.0E+00	1.0E+00	1.0E+00	1.0E+00	1.0E+00	1.0E+00	1.0E+00	1.0E+00	1.0E+00	1.0E+00	1.0E+00	1.0E+00

Exposure Paramater[3]	value	units
Food Ingestion Rate (FIR)	0.00102	kg tissue/day
Soil Ingestion Rate (SIR)	0.0000203	kg soil/day
Plant Ingestion Fraction (F_{food})	0%	Percent
Invertebrate Ingestion Fraction (F_{food})	100%	Percent
Mammal Ingestion Fraction (F_{food})	0%	Percent
Home Range	0.1	Acres
Site Use Factor (SUF)	1.00	Unitless
Body Weight (BW)	0.005	kgBW

Microsoft Solver used to calculate ECVs based one re-arranging the standard HQ equation (USEPA, 1997) below:

$$ECV = \frac{HQ \times TRV}{Dose} = \left(\frac{1 \times TRV \times BW}{SIR + (FIR \times BAF) \times SUF} \right)$$

Notes:

soil ECV.

1 bioaccumulation factors (BAFs; kilograms soil per kilogram tissue [kg soil/kg tissue]); from Table 2.

2 exposure parameters from Table 6-3 of the *Human Health and Ecological Risk Assessment Work Plan* (ARCADIS, 2008).

3 dose caluated for a target HQ of 1 (NOAEL and LOAEL based).

4 Low and High ECVs based on low and high TRVs (from Table 3), respectively.

ECV	ecological comparison value for soil.
dw	dry weight.
High	lowest-observed adverse effects level (LOAEL).
HMW PAHs	high molecular weight polycyclic aromatic hydrocarbons.
kg	kilograms.
kg/day	kilograms per day.
LMW PAHs	low molecular weight polycyclic aromatic hydrocarbons.
Low	no-observed adverse effects level (NOAEL).
mg/kg	milligrams per kilogram.
mg/kgBW-day	milligrams per kilogram body weight per day.
NA	not available or not applicable.

Table A-4
Ecological Comparison Values Based on Desert Shrew and Proposed TRVs

Technical Memorandum 3: Ecological Comparison Values for Metals and PAHs in Soil
PG&E Topock
Needles, California

Protective Media Concentrations (mg/kg)	Cobalt mg/kg (dw)		Copper mg/kg (dw)		Lead mg/kg (dw)		Mercury mg/kg (dw)		Molybdenum mg/kg (dw)		Nickel mg/kg (dw)	
	Low[4]	High[4]	Low[4]	High[4]	Low[4]	High[4]	Low[4]	High[4]	Low[4]	High[4]	Low[4]	High[4]
Sitewide ECVs												
Soil	2.5E+02	6.5E+02	8.7E+01	1.4E+02	6.0E+01	1.3E+02	2.1E+00	5.9E+02	2.2E+00	2.2E+01	7.8E+00	1.6E+01
Plant tissue	0.0E+00	0.0E+00	0.0E+00	0.0E+00	0.0E+00	0.0E+00	0.0E+00	0.0E+00	0.0E+00	0.0E+00	0.0E+00	0.0E+00
Invertebrate tissue	3.1E+01	8.0E+01	4.5E+01	7.5E+01	2.2E+01	4.1E+01	1.2E+00	7.9E+00	1.2E+00	1.2E+01	8.2E+00	1.6E+01
Prey (mammal) tissue	0.0E+00	0.0E+00	0.0E+00	0.0E+00	0.0E+00	0.0E+00	0.0E+00	0.0E+00	0.0E+00	0.0E+00	0.0E+00	0.0E+00
Bioaccumulation Factors (BAFs)[1]												
Soil-to-Plants	--		--		--		--		--		--	
Soil-to-Invertebrates	1.2E-01		5.2E-01		ln(Ci) = 0.807 * ln(Cs) - 0.218		ln(Ci) = 0.3369 * ln(Cs) - 0.078		5.5E-01		1.1E+00	
Soil-to-Mammals	--		--		--		--		--		--	
Dose Calulations for Target Hazard Quotients (HQs)[2]												
	Low	**High**	**Low**	**High**	**Low**	**High**	**Low**	**High**	**Low**	**High**	**Low**	**High**
Dose = TRV	7.3E+00	1.9E+01	9.4E+00	1.6E+01	4.7E+00	8.9E+00	2.5E-01	4.0E+00	2.6E-01	2.6E+00	1.7E+00	3.4E+00
HQ	1.0E+00	1.0E+00	1.0E+00	1.0E+00	1.0E+00	1.0E+00	1.0E+00	1.0E+00	1.0E+00	1.0E+00	1.0E+00	1.0E+00

Table A-4
Ecological Comparison Values Based on Desert Shrew and Proposed TRVs

Technical Memorandum 3: Ecological Comparison Values for Metals and PAHs in Soil
PG&E Topock
Needles, California

Protective Media Concentrations (mg/kg)	Selenium mg/kg (dw)		Silver mg/kg (dw)		Thallium mg/kg (dw)		Vanadium mg/kg (dw)		Zinc mg/kg (dw)		LMW PAHs mg/kg (dw)		HMW PAHs mg/kg (dw)	
	Low[4]	High[4]	Low[4]	High[4]	Low[4]	High[4]	Low[4]	High[4]	Low[4]	High[4]	Low[4]	High[4]	Low[4]	High[4]
Sitewide ECVs														
Soil	1.3E+00	2.2E+00	2.1E+01	2.1E+02	2.3E+00	6.9E+00	3.3E+02	6.6E+02	8.7E+01	4.7E+03	1.1E+02	5.3E+02	1.2E+00	5.8E+00
Plant tissue	6.7E-01	1.2E+00	0.0E+00	0.0E+00	0.0E+00	0.0E+00	0.0E+00	0.0E+00	0.0E+00	0.0E+00	0.0E+00	0.0E+00	2.1E-01	9.6E-01
Invertebrate tissue	1.1E+00	1.7E+00	4.3E+01	4.3E+02	2.3E+00	6.9E+00	1.4E+01	2.8E+01	3.7E+02	1.4E+03	3.2E+02	1.6E+03	3.0E+00	1.5E+01
Prey (mammal) tissue	0.0E+00	0.0E+00	0.0E+00	0.0E+00	0.0E+00	0.0E+00	0.0E+00	0.0E+00	0.0E+00	0.0E+00	0.0E+00	0.0E+00	0.0E+00	0.0E+00
Bioaccumulation Factors (BAFs)[1]														
Soil-to-Plants	--		--		--		--		--		--		--	
Soil-to-Invertebrates	ln(Ci) = 0.733 * ln(Cs) - 0.075		2.0E+00		5.5E-01		4.2E-02		ln(Ci) = 0.328 * ln(Cs) + 4.449		3.0E+00		2.6E+00	
Soil-to-Mammals	--		--		--		--		--		--		--	
Dose Calulations for Target Hazard Quotients (HQs)[2]														
	Low	**High**	**Low**	**High**	**Low**	**High**	**Low**	**High**	**Low**	**High**	**Low**	**High**	**Low**	**High**
Dose = TRV	2.3E-01	3.5E-01	8.8E+00	8.8E+01	4.8E-01	1.4E+00	4.2E+00	8.3E+00	7.5E+01	3.0E+02	6.6E+01	3.3E+02	6.1E-01	3.1E+00
HQ	1.0E+00	1.0E+00	1.0E+00	1.0E+00	1.0E+00	1.0E+00	1.0E+00	1.0E+00	1.0E+00	1.0E+00	1.0E+00	1.0E+00	1.0E+00	1.0E+00

Table A-5
Ecological Comparison Values Based on Kangaroo Rat and Proposed TRVs

Technical Memorandum 3: Ecological Comparison Values for Metals and PAHs in Soil
PG&E Topock
Needles, California

Protective Media Concentrations (mg/kg)	Antimony mg/kg (dw)		Arsenic mg/kg (dw)		Barium mg/kg (dw)		Beryllium mg/kg (dw)		Cadmium mg/kg (dw)		Chromium mg/kg (dw)		Hexavalent Chromium mg/kg (dw)	
	Low[4]	High[4]	Low[4]	High[4]	Low[4]	High[4]	Low[4]	High[4]	Low[4]	High[4]	Low[4]	High[4]	Low[4]	High[4]
Sitewide ECVs														
Soil	1.2E+01	1.4E+02	2.9E+02	4.6E+02	3.5E+03	5.6E+03	2.3E+01	2.9E+01	8.9E+01	2.2E+03	4.5E+02	1.8E+03	1.7E+03	7.3E+03
Plant tissue	4.2E-01	3.9E+00	1.1E+01	1.7E+01	5.5E+02	8.7E+02	5.9E+00	7.0E+00	7.2E+00	4.1E+01	1.8E+01	7.4E+01	7.1E+01	3.0E+02
Invertebrate tissue	0.0E+00	0.0E+00	0.0E+00	0.0E+00	0.0E+00	0.0E+00	0.0E+00	0.0E+00	0.0E+00	0.0E+00	0.0E+00	0.0E+00	0.0E+00	0.0E+00
Prey (mammal) tissue	0.0E+00	0.0E+00	0.0E+00	0.0E+00	0.0E+00	0.0E+00	0.0E+00	0.0E+00	0.0E+00	0.0E+00	0.0E+00	0.0E+00	0.0E+00	0.0E+00
Bioaccumulation Factors (BAFs)[1]														
Soil-to-Plants	ln(Cp) = 0.938 * ln(Cs) - 3.233		3.8E-02		1.6E-01		ln(Cp) = 0.7345 * ln(Cs) - 0.5361		ln(Cp) = 0.546 * ln(Cs) - 0.475		4.1E-02		4.1E-02	
Soil-to-Invertebrates	--		--		--		--		--		--		--	
Soil-to-Mammals	--		--		--		--		--		--		--	
Dose Calulations for Target Hazard Quotients (HQs)[2]														
	Low	High	Low	High	Low	High	Low	High	Low	High	Low	High	Low	High
Dose = TRV	5.9E-02	5.9E-01	1.5E+00	2.3E+00	5.2E+01	8.3E+01	5.3E-01	6.3E-01	7.7E-01	7.7E+00	2.4E+00	9.6E+00	9.2E+00	3.9E+01
HQ	1.0E+00	1.0E+00	1.0E+00	1.0E+00	1.0E+00	1.0E+00	1.0E+00	1.0E+00	1.0E+00	1.0E+00	1.0E+00	1.0E+00	1.0E+00	1.0E+00

Exposure Paramater[3]	value	units
Food Ingestion Rate (FIR	0.00282	kg tissue/day
Soil Ingestion Rate (SIR)	0.0000677	kg soil/day
Plant Ingestion Fraction (F_{food})	100%	Percent
Invertebrate Ingestion Fraction (F_{food})	0%	Percent
Mammal Ingestion Fraction (F_{food})	0%	Percent
Home Range	0.13	Acres
Site Use Factor (SUF)	1.00	Unitless
Body Weight (BW)	0.0343	kgBW

Microsoft Solver used to calculate ECVs based one re-arranging the standard HQ equation (USEPA, 1997) below:

$$ECV = \frac{HQ \times TRV}{Dose} = \left(\frac{1 \times TRV \times BW}{SIR + (FIR \times BAF) \times SUF} \right)$$

Notes:

soil ECV.

1 bioaccumulation factors (BAFs; kilograms soil per kilogram tissue [kg soil/kg tissue]); from Table 2.

2 exposure parameters from Table 6-3 of the *Human Health and Ecological Risk Assessment Work Plan* (ARCADIS, 2008).

3 dose caluated for a target HQ of 1 (NOAEL and LOAEL based).

4 Low and High ECVs based on low and high TRVs (from Table 3), respectively.

ECV	ecological comparison value for soil.
dw	dry weight.
High	lowest-observed adverse effects level (LOAEL).
HMW PAHs	high molecular weight polycyclic aromatic hydrocarbons.
kg	kilograms.
kg/day	kilograms per day.
LMW PAHs	low molecular weight polycyclic aromatic hydrocarbons.
Low	no-observed adverse effects level (NOAEL).
mg/kg	milligrams per kilogram.
mg/kgBW-day	milligrams per kilogram body weight per day.
NA	not available or not applicable.

Table A-5
Ecological Comparison Values Based on Kangaroo Rat and Proposed TRVs

Technical Memorandum 3: Ecological Comparison Values for Metals and PAHs in Soil
PG&E Topock
Needles, California

Protective Media Concentrations (mg/kg)	Cobalt mg/kg (dw)		Copper mg/kg (dw)		Lead mg/kg (dw)		Mercury mg/kg (dw)		Molybdenum mg/kg (dw)		Nickel mg/kg (dw)	
	Low[4]	High[4]	Low[4]	High[4]	Low[4]	High[4]	Low[4]	High[4]	Low[4]	High[4]	Low[4]	High[4]
Sitewide ECVs												
Soil	2.8E+03	7.3E+03	2.7E+03	5.3E+03	1.7E+03	3.4E+03	3.0E+01	1.3E+03	1.2E+01	1.2E+02	4.4E+02	9.6E+02
Plant tissue	2.1E+01	5.4E+01	4.4E+01	5.7E+01	1.7E+01	2.6E+01	2.3E+00	1.8E+01	2.9E+00	2.9E+01	1.0E+01	1.8E+01
Invertebrate tissue	0.0E+00	0.0E+00	0.0E+00	0.0E+00	0.0E+00	0.0E+00	0.0E+00	0.0E+00	0.0E+00	0.0E+00	0.0E+00	0.0E+00
Prey (mammal) tissue	0.0E+00	0.0E+00	0.0E+00	0.0E+00	0.0E+00	0.0E+00	0.0E+00	0.0E+00	0.0E+00	0.0E+00	0.0E+00	0.0E+00
Bioaccumulation Factors (BAFs)[1]												
Soil-to-Plants	7.5E-03		ln(Cp) = 0.394 * ln(Cs) + 0.668		ln(Cp) = 0.561 * ln(Cs) - 1.328		ln(Cp) = 0.544 * ln(Cs) - 0.996		2.5E-01		ln(Cp) = 0.748 * ln(Cs) - 2.223	
Soil-to-Invertebrates	--		--		--		--		--		--	
Soil-to-Mammals	--		--		--		--		--		--	
Dose Calulations for Target Hazard Quotients (HQs)[2]												
	Low	**High**	**Low**	**High**	**Low**	**High**	**Low**	**High**	**Low**	**High**	**Low**	**High**
Dose = TRV	7.3E+00	1.9E+01	9.0E+00	1.5E+01	4.7E+00	8.9E+00	2.5E-01	4.0E+00	2.6E-01	2.6E+00	1.7E+00	3.4E+00
HQ	1.0E+00	1.0E+00	1.0E+00	1.0E+00	1.0E+00	1.0E+00	1.0E+00	1.0E+00	1.0E+00	1.0E+00	1.0E+00	1.0E+00

Table A-5
Ecological Comparison Values Based on Kangaroo Rat and Proposed TRVs

Technical Memorandum 3: Ecological Comparison Values for Metals and PAHs in Soil
PG&E Topock
Needles, California

Protective Media Concentrations (mg/kg)	Selenium mg/kg (dw)		Silver mg/kg (dw)		Thallium mg/kg (dw)		Vanadium mg/kg (dw)		Zinc mg/kg (dw)		LMW PAHs mg/kg (dw)		HMW PAHs mg/kg (dw)	
	Low[4]	High[4]	Low[4]	High[4]	Low[4]	High[4]	Low[4]	High[4]	Low[4]	High[4]	Low[4]	High[4]	Low[4]	High[4]
Sitewide ECVs														
Soil	4.1E+00	6.0E+00	2.7E+03	2.7E+04	2.1E+02	6.2E+02	1.8E+03	3.5E+03	8.3E+03	6.1E+04	3.2E+04	1.6E+05	4.3E+01	2.3E+02
Plant tissue	2.4E+00	3.7E+00	3.8E+01	3.8E+02	8.3E-01	2.5E+00	8.5E+00	1.7E+01	7.2E+02	2.2E+03	3.0E+01	6.2E+01	6.4E+00	3.2E+01
Invertebrate tissue	0.0E+00	0.0E+00	0.0E+00	0.0E+00	0.0E+00	0.0E+00	0.0E+00	0.0E+00	0.0E+00	0.0E+00	0.0E+00	0.0E+00	0.0E+00	0.0E+00
Prey (mammal) tissue	0.0E+00	0.0E+00	0.0E+00	0.0E+00	0.0E+00	0.0E+00	0.0E+00	0.0E+00	0.0E+00	0.0E+00	0.0E+00	0.0E+00	0.0E+00	0.0E+00
Bioaccumulation Factors (BAFs)[1]														
Soil-to-Plants	ln(Cp) = 1.104 * ln(Cs) - 0.677		1.4E-02		4.0E-03		4.9E-03		n(Cp) = 0.554 * ln(Cs) + 1.575		ln(Cp) = 0.4544 * ln(Cs)-1.3205		ln(Cp) = 0.9469 * ln(Cs)-1.7026	
Soil-to-Invertebrates	--		--		--		--		--		--		--	
Soil-to-Mammals	--		--		--		--		--		--		--	
Dose Calulations for Target Hazard Quotients (HQs)[2]														
	Low	**High**	**Low**	**High**	**Low**	**High**	**Low**	**High**	**Low**	**High**	**Low**	**High**	**Low**	**High**
Dose = TRV	2.1E-01	3.1E-01	8.4E+00	8.4E+01	4.8E-01	1.4E+00	4.2E+00	8.3E+00	7.5E+01	3.0E+02	6.6E+01	3.3E+02	6.2E-01	3.1E+00
HQ	1.0E+00	1.0E+00	1.0E+00	1.0E+00	1.0E+00	1.0E+00	1.0E+00	1.0E+00	1.0E+00	1.0E+00	1.0E+00	1.0E+00	1.0E+00	1.0E+00

Table A-6
Ecological Comparison Values Based on Desert Kit Fox and Proposed TRVs

Technical Memorandum 3: Ecological Comparison Values for Metals and PAHs in Soil
PG&E Topock
Needles, California

Protective Media Concentrations (mg/kg)	Antimony[4] mg/kg (dw)		Arsenic mg/kg (dw)		Barium[4] mg/kg (dw)		Beryllium[4] mg/kg (dw)		Cadmium mg/kg (dw)		Chromium mg/kg (dw)		Hexavalent Chromium mg/kg (dw)	
	Low[5]	High[5]	Low[5]	High[5]	Low[5]	High[5]	Low[5]	High[5]	Low[5]	High[5]	Low[5]	High[5]	Low[5]	High[5]
Sitewide ECVs														
Soil	2.1E+01	2.1E+02	9.7E+02	1.6E+03	5.1E+04	8.1E+04	5.0E+02	5.9E+02	5.7E+02	7.1E+03	1.1E+03	5.3E+03	5.0E+03	2.5E+04
Plant tissue	0.0E+00	0.0E+00	0.0E+00	0.0E+00	0.0E+00	0.0E+00	0.0E+00	0.0E+00	0.0E+00	0.0E+00	0.0E+00	0.0E+00	0.0E+00	0.0E+00
Invertebrate tissue	0.0E+00	0.0E+00	0.0E+00	0.0E+00	0.0E+00	0.0E+00	0.0E+00	0.0E+00	0.0E+00	0.0E+00	0.0E+00	0.0E+00	0.0E+00	0.0E+00
Prey (mammal) tissue	1.1E+00	1.1E+01	2.2E+00	3.2E+00	3.5E+01	5.6E+01	1.1E+00	1.3E+00	5.7E+00	1.9E+01	3.8E+01	1.2E+02	1.2E+02	3.9E+02
Bioaccumulation Factors (BAFs)[1]														
Soil-to-Plants	--		--		--		--		--		--		--	
Soil-to-Invertebrates	--		--		--		--		--		--		--	
Soil-to-Mammals	0.05 * Cd		ln(Cm) = 0.8188 * ln(Cs) -8.4471		0.0075 * Cd		0.05 * Cd		ln(Cm) = 0.4723 * ln(Cs) - 1.2571		ln(Cm) = 0.7338 * ln(Cs) - 1.4599		ln(Cm) = 0.7338 * ln(Cs) - 1.4599	
Dose Calulations for Target Hazard Quotients (HQs)[2]														
	Low	High	Low	High	Low	High	Low	High	Low	High	Low	High	Low	High
Dose = TRV	5.9E-02	5.9E-01	1.0E+00	1.7E+00	5.2E+01	8.3E+01	5.3E-01	6.3E-01	7.7E-01	7.7E+00	2.4E+00	9.6E+00	9.2E+00	3.9E+01
HQ	1.0E+00	1.0E+00	1.0E+00	1.0E+00	1.0E+00	1.0E+00	1.0E+00	1.0E+00	1.0E+00	1.0E+00	1.0E+00	1.0E+00	1.0E+00	1.0E+00

Exposure Paramater[3]	value	units
Food Ingestion Rate (FIR	0.07020	kg tissue/day
Soil Ingestion Rate (SIR)	0.0019656	kg soil/day
Plant Ingestion Fraction (F_{food})	0%	Percent
Invertebrate Ingestion Fraction (F_{food})	0%	Percent
Mammal Ingestion Fraction (F_{food})	100%	Percent
Home Range	3039	Acres
Site Use Factor (SUF)	1.00	Unitless
Body Weight (BW)	1.985	kgBW

Microsoft Solver used to calculate ECVs based one re-arranging the standard HQ equation (USEPA, 1997) below:

$$ECV = \frac{HQ \times TRV}{Dose} = \left(\frac{1 \times TRV \times BW}{SIR + (FIR \times BAF) \times SUF} \right)$$

Notes:

soil ECV.

1 bioaccumulation factors (BAFs; kilograms soil per kilogram tissue [kg soil/kg tissue]); from Table 2.

2 exposure parameters from Table 6-3 of the *Human Health and Ecological Risk Assessment Work Plan* (ARCADIS, 2008).

3 dose caluated for a target HQ of 1 (NOAEL and LOAEL based).

4 Low and High ECVs based on low and high TRVs (from Table 3), respectively.

ECV	ecological comparison value for soil.
dw	dry weight.
High	lowest-observed adverse effects level (LOAEL).
HMW PAHs	high molecular weight polycyclic aromatic hydrocarbons.
kg	kilograms.
kg/day	kilograms per day.
LMW PAHs	low molecular weight polycyclic aromatic hydrocarbons.
Low	no-observed adverse effects level (NOAEL).
mg/kg	milligrams per kilogram.
mg/kgBW-day	milligrams per kilogram body weight per day.
NA	not available or not applicable.

Table A-6
Ecological Comparison Values Based on Desert Kit Fox and Proposed TRVs

Technical Memorandum 3: Ecological Comparison Values for Metals and PAHs in Soil
PG&E Topock
Needles, California

Protective Media Concentrations (mg/kg)	Cobalt mg/kg (dw)		Copper mg/kg (dw)		Lead mg/kg (dw)		Mercury mg/kg (dw)		Molybdenum[4] mg/kg (dw)		Nickel mg/kg (dw)	
	Low[5]	High[5]	Low[5]	High[5]	Low[5]	High[5]	Low[5]	High[5]	Low[5]	High[5]	Low[5]	High[5]
Sitewide ECVs												
Soil	1.5E+03	3.2E+03	4.7E+03	8.4E+03	3.4E+03	7.0E+03	3.2E+01	5.1E+02	3.8E+01	3.8E+02	1.0E+03	2.4E+03
Plant tissue	0.0E+00	0.0E+00	0.0E+00	0.0E+00	0.0E+00	0.0E+00	0.0E+00	0.0E+00	0.0E+00	0.0E+00	0.0E+00	0.0E+00
Invertebrate tissue	0.0E+00	0.0E+00	0.0E+00	0.0E+00	0.0E+00	0.0E+00	0.0E+00	0.0E+00	0.0E+00	0.0E+00	0.0E+00	0.0E+00
Prey (mammal) tissue	1.6E+02	4.4E+02	2.6E+01	2.8E+01	3.9E+01	5.4E+01	6.2E+00	9.9E+01	6.3E+00	6.3E+01	2.0E+01	2.9E+01
Bioaccumulation Factors (BAFs)[1]												
Soil-to-Plants	--		--		--		--		--		--	
Soil-to-Invertebrates	--		--		--		--		--		--	
Soil-to-Mammals	ln(Cm) = 1.307 * ln(Cs) - 4.4669		ln(Cm) = 0.1444 * ln(Cs) + 2.042		ln(Cm) = 0.4422 * ln(Cs) + 0.0761		1.9E-01		0.006 * 50 * Cd		ln(Cm) = 0.4658 * ln(Cs) - 0.2462	
Dose Calulations for Target Hazard Quotients (HQs)[2]					**0.0E+00**							
	Low	**High**	**Low**	**High**	**Low**	**High**	**Low**	**High**	**Low**	**High**	**Low**	**High**
Dose = TRV	7.3E+00	1.9E+01	5.6E+00	9.3E+00	4.7E+00	8.9E+00	2.5E-01	4.0E+00	2.6E-01	2.6E+00	1.7E+00	3.4E+00
HQ	1.0E+00	1.0E+00	1.0E+00	1.0E+00	1.0E+00	1.0E+00	1.0E+00	1.0E+00	1.0E+00	1.0E+00	1.0E+00	1.0E+00

Table A-6
Ecological Comparison Values Based on Desert Kit Fox and Proposed TRVs

Technical Memorandum 3: Ecological Comparison Values for Metals and PAHs in Soil
PG&E Topock
Needles, California

Protective Media Concentrations (mg/kg)	Selenium mg/kg (dw)		Silver mg/kg (dw)		Thallium mg/kg (dw)		Vanadium mg/kg (dw)		Zinc mg/kg (dw)		LMW PAHs mg/kg (dw)		HMW PAHs mg/kg (dw)	
	Low[5]	High[5]	Low[5]	High[5]	Low[5]	High[5]	Low[5]	High[5]	Low[5]	High[5]	Low[5]	High[5]	Low[5]	High[5]
Sitewide ECVs														
Soil	4.5E+01	8.9E+01	5.3E+03	5.3E+04	9.7E+01	2.9E+02	2.9E+03	5.8E+03	7.0E+04	2.9E+05	6.6E+04	3.3E+05	6.2E+02	3.1E+03
Plant tissue	0.0E+00	0.0E+00	0.0E+00	0.0E+00	0.0E+00	0.0E+00	0.0E+00	0.0E+00	0.0E+00	0.0E+00	0.0E+00	0.0E+00	0.0E+00	0.0E+00
Invertebrate tissue	0.0E+00	0.0E+00	0.0E+00	0.0E+00	0.0E+00	0.0E+00	0.0E+00	0.0E+00	0.0E+00	0.0E+00	0.0E+00	0.0E+00	0.0E+00	0.0E+00
Prey (mammal) tissue	2.8E+00	3.6E+00	2.1E+01	2.1E+02	1.1E+01	3.2E+01	3.6E+01	7.2E+01	1.7E+02	1.9E+02	0.0E+00	0.0E+00	0.0E+00	0.0E+00
Bioaccumulation Factors (BAFs)[1]														
Soil-to-Plants	--		--		--		--		--		--		--	
Soil-to-Invertebrates	--		--		--		--		--		--		--	
Soil-to-Mammals	ln(Cm) = 0.3764 * ln(Cs) - 0.4158		4.0E-03		1.1E-01		1.2E-02		ln(Cm) = 0.0706 * ln(Cs) + 4.3632		0.0E+00		0.0E+00	
Dose Calulations for Target Hazard Quotients (HQs)[2]														
	Low	**High**	**Low**	**High**	**Low**	**High**	**Low**	**High**	**Low**	**High**	**Low**	**High**	**Low**	**High**
Dose = TRV	1.4E-01	2.2E-01	6.0E+00	6.0E+01	4.8E-01	1.4E+00	4.2E+00	8.3E+00	7.5E+01	3.0E+02	6.6E+01	3.3E+02	6.2E-01	3.1E+00
HQ	1.0E+00	1.0E+00	1.0E+00	1.0E+00	1.0E+00	1.0E+00	1.0E+00	1.0E+00	1.0E+00	1.0E+00	1.0E+00	1.0E+00	1.0E+00	1.0E+00

Table A-7
Ecological Comparison Values Based on the Gambel's Quail and DTSC-Recommended TRVs

Technical Memorandum 3: Ecological Comparison Values for Metals and PAHs in Soil
PG&E Topock
Needles, California

Protective Media Concentrations (mg/kg)	Antimony mg/kg (dw)		Arsenic mg/kg (dw)		Barium mg/kg (dw)		Beryllium mg/kg (dw)		Cadmium mg/kg (dw)		Chromium mg/kg (dw)		Hexavalent Chromium mg/kg (dw)	
	Low[4]	High[4]	Low[4]	High[4]	Low[4]	High[4]	Low[4]	High[4]	Low[4]	High[4]	Low[4]	High[4]	Low[4]	High[4]
Sitewide ECVs														
Soil	NA	NA	1.0E+03	4.1E+03	NA	NA	NA	NA	5.3E+00	2.2E+03	4.8E+02	2.8E+03	NA	NA
Plant tissue	NA	NA	3.8E+01	1.5E+02	NA	NA	NA	NA	1.5E+00	4.2E+01	2.0E+01	1.2E+02	NA	NA
Invertebrate tissue	NA	NA	0.0E+00	0.0E+00	NA	NA	NA	NA	0.0E+00	0.0E+00	0.0E+00	0.0E+00	NA	NA
Prey (mammal) tissue	NA	NA	0.0E+00	0.0E+00	NA	NA	NA	NA	0.0E+00	0.0E+00	0.0E+00	0.0E+00	NA	NA
Bioaccumulation Factors (BAFs)[1]														
Soil-to-Plants	ln(Cp) = 0.938 * ln(Cs) - 3.233		3.8E-02		1.6E-01		ln(Cp) = 0.7345 * ln(Cs) - 0.5361		ln(Cp) = 0.546 * ln(Cs) - 0.475		4.1E-02		4.1E-02	
Soil-to-Invertebrates	--		--		--		--		--		--		--	
Soil-to-Mammals	--		--		--		--		--		--		--	
Dose Calulations for Target Hazard Quotients (HQs)[2]														
	Low	High	Low	High	Low	High	Low	High	Low	High	Low	High	Low	High
Dose = TRV	NA	NA	5.5E+00	2.2E+01	NA	NA	NA	NA	8.0E-02	1.0E+01	2.7E+00	1.6E+01	NA	NA
HQ	NA	NA	1.0E+00	1.0E+00	NA	NA	NA	NA	1.0E+00	1.0E+00	1.0E+00	1.0E+00	NA	NA

Exposure Paramater[3]	value	units
Food Ingestion Rate (FIR	0.00649	kg tissue/day
Soil Ingestion Rate (SIR)	0.0006750	kg soil/day
Plant Ingestion Fraction (F_{food})	100%	Percent
Invertebrate Ingestion Fraction (F_{food})	0%	Percent
Mammal Ingestion Fraction (F_{food})	0%	Percent
Home Range	35.7	Acres
Site Use Factor (SUF)	1.00	Unitless
Body Weight (BW)	0.1693	kgBW

Microsoft Solver used to calculate ECVs based one re-arranging the standard HQ equation (USEPA, 1997) below:

$$ECV = \frac{HQ \times TRV}{Dose} = \left(\frac{1 \times TRV \times BW}{SIR + (FIR \times BAF) \times SUF} \right)$$

Notes:

soil ECV.

1 bioaccumulation factors (BAFs; kilograms soil per kilogram tissue [kg soil/kg tissue]); from Table 2.

2 exposure parameters from Table 6-3 of the *Human Health and Ecological Risk Assessment Work Plan* (ARCADIS, 2008).

3 dose caluated for a target HQ of 1 (NOAEL and LOAEL based).

4 Low and High ECVs based on low and high TRVs (from Table 4), respectively.

ECV	ecological comparison value for soil.
DTSC	Department of Toxic Substances Control.
dw	dry weight.
High	lowest-observed adverse effects level (LOAEL).
HMW PAHs	high molecular weight polycyclic aromatic hydrocarbons.
kg	kilograms.
kg/day	kilograms per day.
LMW PAHs	low molecular weight polycyclic aromatic hydrocarbons.
Low	no-observed adverse effects level (NOAEL).
mg/kg	milligrams per kilogram.
mg/kg-bw/day	milligrams per kilogram body weight per day.
NA	not available or not applicable.

Table A-7
Ecological Comparison Values Based on the Gambel's Quail and DTSC-Recommended TRVs

Technical Memorandum 3: Ecological Comparison Values for Metals and PAHs in Soil
PG&E Topock
Needles, California

Protective Media Concentrations (mg/kg)	Cobalt mg/kg (dw)		Copper mg/kg (dw)		Lead mg/kg (dw)		Mercury mg/kg (dw)		Molybdenum mg/kg (dw)		Nickel mg/kg (dw)		Selenium mg/kg (dw)	
	Low[4]	High[4]	Low[4]	High[4]	Low[4]	High[4]	Low[4]	High[4]	Low[4]	High[4]	Low[4]	High[4]	Low[4]	High[4]
Sitewide ECVs														
Soil	1.8E+03	4.3E+03	3.8E+02	1.2E+04	9.8E-01	2.0E+03	3.2E+00	2.5E+01	2.6E+02	2.6E+03	2.8E+02	1.3E+04	8.2E+00	2.9E+01
Plant tissue	1.3E+01	3.2E+01	2.0E+01	8.0E+01	2.6E-01	1.9E+01	6.9E-01	2.1E+00	6.4E+01	6.5E+02	7.3E+00	1.3E+02	5.2E+00	2.1E+01
Invertebrate tissue	0.0E+00	0.0E+00	0.0E+00	0.0E+00	0.0E+00	0.0E+00	0.0E+00	0.0E+00	0.0E+00	0.0E+00	0.0E+00	0.0E+00	0.0E+00	0.0E+00
Prey (mammal) tissue	0.0E+00	0.0E+00	0.0E+00	0.0E+00	0.0E+00	0.0E+00	0.0E+00	0.0E+00	0.0E+00	0.0E+00	0.0E+00	0.0E+00	0.0E+00	0.0E+00
Bioaccumulation Factors (BAFs)[1]														
Soil-to-Plants	7.5E-03		ln(Cp) = 0.394 * ln(Cs) + 0.668		ln(Cp) = 0.561 * ln(Cs) - 1.328		ln(Cp) = 0.544 * ln(Cs) - 0.996		2.5E-01		ln(Cp) = 0.748 * ln(Cs) - 2.223		ln(Cp) = 1.104 * ln(Cs) - 0.677	
Soil-to-Invertebrates	--		--		--		--		--		--		--	
Soil-to-Mammals	--		--		--		--		--		--		--	
Dose Calulations for Target Hazard Quotients (HQs)[2]														
	Low	High	Low	High	Low	High	Low	High	Low	High	Low	High	Low	High
Dose = TRV	7.6E+00	1.8E+01	2.3E+00	5.2E+01	1.4E-02	8.8E+00	3.9E-02	1.8E-01	3.5E+00	3.5E+01	1.4E+00	5.6E+01	2.3E-01	9.3E-01
HQ	1.0E+00	1.0E+00	1.0E+00	1.0E+00	1.0E+00	1.0E+00	1.0E+00	1.0E+00	1.0E+00	1.0E+00	1.0E+00	1.0E+00	1.0E+00	1.0E+00

Table A-7
Ecological Comparison Values Based on the Gambel's Quail and DTSC-Recommended TRVs

Technical Memorandum 3: Ecological Comparison Values for Metals and PAHs in Soil
PG&E Topock
Needles, California

Protective Media Concentrations (mg/kg)	Silver mg/kg (dw)		Thallium mg/kg (dw)		Vanadium mg/kg (dw)		Zinc mg/kg (dw)		LMW PAHs mg/kg (dw)		HMW PAHs mg/kg (dw)	
	Low[4]	High[4]	Low[4]	High[4]	Low[4]	High[4]	Low[4]	High[4]	Low[4]	High[4]	Low[4]	High[4]
Sitewide ECVs												
Soil	4.5E+02	4.5E+03	8.5E+01	8.5E+02	8.2E+01	1.6E+02	1.6E+03	2.9E+04	5.6E+03	5.7E+04	1.1E+03	1.2E+04
Plant tissue	6.3E+00	6.3E+01	3.4E-01	3.4E+00	4.0E-01	8.0E-01	2.9E+02	1.4E+03	1.3E+01	3.9E+01	1.4E+02	1.3E+03
Invertebrate tissue	0.0E+00	0.0E+00	0.0E+00	0.0E+00	0.0E+00	0.0E+00	0.0E+00	0.0E+00	0.0E+00	0.0E+00	0.0E+00	0.0E+00
Prey (mammal) tissue	0.0E+00	0.0E+00	0.0E+00	0.0E+00	0.0E+00	0.0E+00	0.0E+00	0.0E+00	0.0E+00	0.0E+00	0.0E+00	0.0E+00
Bioaccumulation Factors (BAFs)[1]												
Soil-to-Plants	1.4E-02		4.0E-03		4.9E-03		ln(Cp) = 0.554 * ln(Cs) + 1.575		ln(Cp) = 0.4544 * ln(Cs)-1.3205		ln(Cp) = 0.9469 * ln(Cs)-1.7026	
Soil-to-Invertebrates	--		--		--		--		--		--	
Soil-to-Mammals	--		--		--		--		--		--	
Dose Calulations for Target Hazard Quotients (HQs)[2]												
	Low	High	Low	High	Low	High	Low	High	Low	High	Low	High
Dose = TRV	2.0E+00	2.0E+01	3.5E-01	3.5E+00	3.4E-01	6.9E-01	1.7E+01	1.7E+02	2.3E+01	2.3E+02	1.0E+01	1.0E+02
HQ	1.0E+00	1.0E+00	1.0E+00	1.0E+00	1.0E+00	1.0E+00	1.0E+00	1.0E+00	1.0E+00	1.0E+00	1.0E+00	1.0E+00

Table A-8
Ecological Comparison Values Based on the Cactus Wren and DTSC-Recommended TRVs

Technical Memorandum 3: Ecological Comparison Values for Metals and PAHs in Soil
PG&E Topock
Needles, California

Protective Media Concentrations (mg/kg)	Antimony mg/kg (dw)		Arsenic mg/kg (dw)		Barium mg/kg (dw)		Beryllium mg/kg (dw)		Cadmium mg/kg (dw)		Chromium mg/kg (dw)		Hexavalent Chromium mg/kg (dw)	
	Low[4]	High[4]	Low[4]	High[4]	Low[4]	High[4]	Low[4]	High[4]	Low[4]	High[4]	Low[4]	High[4]	Low[4]	High[4]
Sitewide ECVs														
Soil	NA	NA	2.1E+02	9.6E+02	NA	NA	NA	NA	2.5E-02	1.1E+01	3.6E+01	2.1E+02	NA	NA
Plant tissue	NA	NA	0.0E+00	0.0E+00	NA	NA	NA	NA	0.0E+00	0.0E+00	0.0E+00	0.0E+00	NA	NA
Invertebrate tissue	NA	NA	1.1E+01	3.1E+01	NA	NA	NA	NA	4.3E-01	5.6E+01	1.1E+01	6.5E+01	NA	NA
Prey (mammal) tissue	NA	NA	0.0E+00	0.0E+00	NA	NA	NA	NA	0.0E+00	0.0E+00	0.0E+00	0.0E+00	NA	NA
Bioaccumulation Factors (BAFs)[1]														
Soil-to-Plants	--		--		--		--		--		--		--	
Soil-to-Invertebrates	1.0E+00		ln(Ci) = 0.706 * ln(Cs) - 1.421		9.1E-02		4.5E-02		ln(Ci) = 0.795 * ln(Cs) + 2.114		3.1E-01		3.1E-01	
Soil-to-Mammals	--		--		--		--		--		--		--	
Dose Calulations for Target Hazard Quotients (HQs)[2]														
	Low	High	Low	High	Low	High	Low	High	Low	High	Low	High	Low	High
Dose = TRV	NA	NA	5.5E+00	2.2E+01	NA	NA	NA	NA	8.0E-02	1.0E+01	2.7E+00	1.6E+01	NA	NA
HQ	NA	NA	1.0E+00	1.0E+00	NA	NA	NA	NA	1.0E+00	1.0E+00	1.0E+00	1.0E+00	NA	NA

Exposure Paramater[3]	value	units
Food Ingestion Rate (FIR	0.00713	kg tissue/day
Soil Ingestion Rate (SIR)	0.0006631	kg soil/day
Plant Ingestion Fraction (F_{food})	0%	Percent
Invertebrate Ingestion Fraction (F_{food})	100%	Percent
Mammal Ingestion Fraction (F_{food})	0%	Percent
Home Range	4.8	Acres
Site Use Factor (SUF)	1.00	Unitless
Body Weight (BW)	0.0389	kgBW

Microsoft Solver used to calculate ECVs based one re-arranging the standard HQ equation (USEPA, 1997) below:

$$ECV = \frac{HQ \times TRV}{Dose} = \left(\frac{1 \times TRV \times BW}{SIR + (FIR \times BAF) \times SUF} \right)$$

Notes:

soil ECV.

1 bioaccumulation factors (BAFs; kilograms soil per kilogram tissue [kg soil/kg tissue]); from Table 2.

2 exposure parameters from Table 6-3 of the *Human Health and Ecological Risk Assessment Work Plan* (ARCADIS, 2008).

3 dose caluated for a target HQ of 1 (NOAEL and LOAEL based).

4 Low and High ECVs based on low and high TRVs (from Table 4), respectively.

ECV	ecological comparison value for soil.
DTSC	Department of Toxic Substances Control.
dw	dry weight.
High	lowest-observed adverse effects level (LOAEL).
HMW PAHs	high molecular weight polycyclic aromatic hydrocarbons.
kg	kilograms.
kg/day	kilograms per day.
LMW PAHs	low molecular weight polycyclic aromatic hydrocarbons.
Low	no-observed adverse effects level (NOAEL).
mg/kg	milligrams per kilogram.
mg/kg-bw/day	milligrams per kilogram body weight per day.
NA	not available or not applicable.

Table A-8
Ecological Comparison Values Based on the Cactus Wren and DTSC-Recommended TRVs

Technical Memorandum 3: Ecological Comparison Values for Metals and PAHs in Soil
PG&E Topock
Needles, California

Protective Media Concentrations (mg/kg)	Cobalt mg/kg (dw)		Copper mg/kg (dw)		Lead mg/kg (dw)		Mercury mg/kg (dw)		Molybdenum mg/kg (dw)		Nickel mg/kg (dw)		Selenium mg/kg (dw)	
	Low[4]	High[4]	Low[4]	High[4]	Low[4]	High[4]	Low[4]	High[4]	Low[4]	High[4]	Low[4]	High[4]	Low[4]	High[4]
Sitewide ECVs														
Soil	1.9E+02	4.6E+02	2.1E+01	4.7E+02	5.0E-02	1.2E+02	1.3E-02	9.1E-01	3.0E+01	3.0E+02	6.5E+00	2.7E+02	1.3E+00	8.1E+00
Plant tissue	0.0E+00	0.0E+00	0.0E+00	0.0E+00	0.0E+00	0.0E+00	0.0E+00	0.0E+00	0.0E+00	0.0E+00	0.0E+00	0.0E+00	0.0E+00	0.0E+00
Invertebrate tissue	2.4E+01	5.7E+01	1.1E+01	2.4E+02	7.2E-02	3.7E+01	2.1E-01	9.0E-01	1.6E+01	1.6E+02	6.9E+00	2.8E+02	1.1E+00	4.3E+00
Prey (mammal) tissue	0.0E+00	0.0E+00	0.0E+00	0.0E+00	0.0E+00	0.0E+00	0.0E+00	0.0E+00	0.0E+00	0.0E+00	0.0E+00	0.0E+00	0.0E+00	0.0E+00
Bioaccumulation Factors (BAFs)[1]														
Soil-to-Plants	--		--		--		--		--		--		--	
Soil-to-Invertebrates	1.2E-01		5.2E-01		ln(Ci) = 0.807 * ln(Cs) - 0.218		ln(Ci) = 0.3369 * ln(Cs) - 0.078		5.5E-01		1.1E+00		ln(Ci) = 0.733 * ln(Cs) - 0.075	
Soil-to-Mammals	--		--		--		--		--		--		--	
Dose Calulations for Target Hazard Quotients (HQs)[2]														
	Low	High	Low	High	Low	High	Low	High	Low	High	Low	High	Low	High
Dose = TRV	7.6E+00	1.8E+01	2.3E+00	5.2E+01	1.4E-02	8.8E+00	3.9E-02	1.8E-01	3.5E+00	3.5E+01	1.4E+00	5.6E+01	2.3E-01	9.3E-01
HQ	1.0E+00	1.0E+00	1.0E+00	1.0E+00	1.0E+00	1.0E+00	1.0E+00	1.0E+00	1.0E+00	1.0E+00	1.0E+00	1.0E+00	1.0E+00	1.0E+00

Table A-8
Ecological Comparison Values Based on the Cactus Wren and DTSC-Recommended TRVs

Technical Memorandum 3: Ecological Comparison Values for Metals and PAHs in Soil
PG&E Topock
Needles, California

Protective Media Concentrations (mg/kg)	Silver mg/kg (dw)		Thallium mg/kg (dw)		Vanadium mg/kg (dw)		Zinc mg/kg (dw)		LMW PAHs mg/kg (dw)		HMW PAHs mg/kg (dw)	
	Low[4]	High[4]	Low[4]	High[4]	Low[4]	High[4]	Low[4]	High[4]	Low[4]	High[4]	Low[4]	High[4]
Sitewide ECVs												
Soil	5.2E+00	5.2E+01	3.0E+00	3.0E+01	1.4E+01	2.8E+01	1.3E+00	1.1E+03	4.0E+01	4.0E+02	2.0E+01	2.0E+02
Plant tissue	0.0E+00	0.0E+00	0.0E+00	0.0E+00	0.0E+00	0.0E+00	0.0E+00	0.0E+00	0.0E+00	0.0E+00	0.0E+00	0.0E+00
Invertebrate tissue	1.1E+01	1.1E+02	1.6E+00	1.6E+01	5.8E-01	1.2E+00	9.4E+01	8.4E+02	1.2E+02	1.2E+03	5.3E+01	5.3E+02
Prey (mammal) tissue	0.0E+00	0.0E+00	0.0E+00	0.0E+00	0.0E+00	0.0E+00	0.0E+00	0.0E+00	0.0E+00	0.0E+00	0.0E+00	0.0E+00
Bioaccumulation Factors (BAFs)[1]												
Soil-to-Plants	--		--		--		--		--		--	
Soil-to-Invertebrates	2.0E+00		5.5E-01		4.2E-02		ln(Ci) = 0.328 * ln(Cs) + 4.449		3.0E+00		2.6E+00	
Soil-to-Mammals	--		--		--		--		--		--	
Dose Calulations for Target Hazard Quotients (HQs)[2]												
	Low	High	Low	High	Low	High	Low	High	Low	High	Low	High
Dose = TRV	2.0E+00	2.0E+01	3.5E-01	3.5E+00	3.4E-01	6.9E-01	1.7E+01	1.7E+02	2.3E+01	2.3E+02	1.0E+01	1.0E+02
HQ	1.0E+00	1.0E+00	1.0E+00	1.0E+00	1.0E+00	1.0E+00	1.0E+00	1.0E+00	1.0E+00	1.0E+00	1.0E+00	1.0E+00

Table A-9
Ecological Comparison Values Based on the Red-Tailed Hawk and on DTSC-Recommended TRVs

Technical Memorandum 3: Ecological Comparison Values for Metals and PAHs in Soil
PG&E Topock
Needles, California

Protective Media Concentrations (mg/kg)	Antimony mg/kg (dw)		Arsenic mg/kg (dw)		Barium mg/kg (dw)		Beryllium mg/kg (dw)		Cadmium mg/kg (dw)		Chromium mg/kg (dw)		Hexavalent Chromium mg/kg (dw)	
	Low[5]	High[5]	Low[5]	High[5]	Low[5]	High[5]	Low[5]	High[5]	Low[5]	High[5]	Low[5]	High[5]	Low[5]	High[5]
Sitewide ECVs														
Soil	NA	NA	4.4E+03	1.8E+04	NA	NA	NA	NA	1.0E+01	8.0E+03	5.9E+02	5.2E+03	NA	NA
Plant tissue	NA	NA	0.0E+00	0.0E+00	NA	NA	NA	NA	0.0E+00	0.0E+00	0.0E+00	0.0E+00	NA	NA
Invertebrate tissue	NA	NA	0.0E+00	0.0E+00	NA	NA	NA	NA	0.0E+00	0.0E+00	0.0E+00	0.0E+00	NA	NA
Prey (mammal) tissue	NA	NA	7.6E+00	2.4E+01	NA	NA	NA	NA	8.6E-01	2.0E+01	2.5E+01	1.2E+02	NA	NA
Bioaccumulation Factors (BAFs)[1]														
Soil-to-Plants	--		--		--		--		--		--		--	
Soil-to-Invertebrates	--		--		--		--		--		--		--	
Soil-to-Mammals	0.05 * Cd		ln(Cm) = 0.8188 * ln(Cs) -4.8471		0.0075 * Cd		0.05 * Cd		ln(Cm) = 0.4723 * ln(Cs) - 1.2571		ln(Cm) = 0.7338 * ln(Cs) - 1.4599		ln(Cm) = 0.7338 * ln(Cs) - 1.4599	
Dose Calulations for Target Hazard Quotients (HQs)[2]														
	Low	High	Low	High	Low	High	Low	High	Low	High	Low	High	Low	High
Dose = TRV	NA	NA	5.5E+00	2.2E+01	NA	NA	NA	NA	8.0E-02	1.0E+01	2.7E+00	1.6E+01	NA	NA
HQ	NA	NA	1.0E+00	1.0E+00	NA	NA	NA	NA	1.0E+00	1.0E+00	1.0E+00	1.0E+00	NA	NA

Exposure Paramater[3]	value	units
Food Ingestion Rate (FIR	0.08990	kg tissue/day
Soil Ingestion Rate (SIR)	0.0012586	kg soil/day
Plant Ingestion Fraction (F_{food})	0%	Percent
Invertebrate Ingestion Fraction (F_{food})	0%	Percent
Mammal Ingestion Fraction (F_{food})	100%	Percent
Home Range	2471	Acres
Site Use Factor (SUF)	1.00	Unitless
Body Weight (BW)	1.134	kgBW

Microsoft Solver used to calculate ECVs based one re-arranging the standard HQ equation (USEPA, 1997) below:

$$ECV = \frac{HQ \times TRV}{Dose} = \left(\frac{1 \times TRV \times BW}{SIR + (FIR \times BAF) \times SUF} \right)$$

Notes:

soil ECV.

1 bioaccumulation factors (BAFs; kilograms soil per kilogram tissue [kg soil/kg tissue]); from Table 2.

2 exposure parameters from Table 6-3 of the *Human Health and Ecological Risk Assessment Work Plan* (ARCADIS, 2008).

3 dose caluated for a target HQ of 1 (NOAEL and LOAEL based).

4 Low and High ECVs based on low and high TRVs (from Table 4), respectively.

ECV	ecological comparison value for soil.
DTSC	Department of Toxic Substances Control.
dw	dry weight.
High	lowest-observed adverse effects level (LOAEL).
HMW PAHs	high molecular weight polycyclic aromatic hydrocarbons.
kg	kilograms.
kg/day	kilograms per day.
LMW PAHs	low molecular weight polycyclic aromatic hydrocarbons.
Low	no-observed adverse effects level (NOAEL).
mg/kg	milligrams per kilogram.
mg/kg-bw/day	milligrams per kilogram body weight per day.
NA	not available or not applicable.

Table A-9
Ecological Comparison Values Based on the Red-Tailed Hawk and on DTSC-Recommended TRVs

Technical Memorandum 3: Ecological Comparison Values for Metals and PAHs in Soil
PG&E Topock
Needles, California

Protective Media Concentrations (mg/kg)	Cobalt mg/kg (dw)		Copper mg/kg (dw)		Lead mg/kg (dw)		Mercury mg/kg (dw)		Molybdenum[4] mg/kg (dw)		Nickel mg/kg (dw)		Selenium mg/kg (dw)	
	Low[5]	High[5]	Low[5]	High[5]	Low[5]	High[5]	Low[5]	High[5]	Low[5]	High[5]	Low[5]	High[5]	Low[5]	High[5]
Sitewide ECVs														
Soil	9.0E+02	1.8E+03	6.7E+02	4.5E+04	1.7E-02	4.7E+03	2.4E+00	1.1E+01	1.4E+02	1.4E+03	3.7E+02	4.3E+04	3.3E+01	3.9E+02
Plant tissue	0.0E+00	0.0E+00	0.0E+00	0.0E+00	0.0E+00	0.0E+00	0.0E+00	0.0E+00	0.0E+00	0.0E+00	0.0E+00	0.0E+00	0.0E+00	0.0E+00
Invertebrate tissue	0.0E+00	0.0E+00	0.0E+00	0.0E+00	0.0E+00	0.0E+00	0.0E+00	0.0E+00	0.0E+00	0.0E+00	0.0E+00	0.0E+00	0.0E+00	0.0E+00
Prey (mammal) tissue	8.3E+01	2.1E+02	2.0E+01	3.6E+01	1.8E-01	4.5E+01	4.6E-01	2.1E+00	2.3E+01	2.3E+02	1.2E+01	1.1E+02	2.4E+00	6.2E+00
Bioaccumulation Factors (BAFs)[1]														
Soil-to-Plants	--		--		--		--		--		--		--	
Soil-to-Invertebrates	--		--		--		--		--		--		--	
Soil-to-Mammals	ln(Cm) = 1.307 * ln(Cs) - 4.4669		ln(Cm) = 0.1444 * ln(Cs) + 2.042		ln(Cm) = 0.4422 * ln(Cs) + 0.0761		1.9E-01		0.006 * 50 * Cd		ln(Cm) = 0.4658 * ln(Cs) - 0.2462		ln(Cm) = 0.3764 * ln(Cs) - 0.4158	
Dose Calulations for Target Hazard Quotients (HQs)[2]														
	Low	High	Low	High	Low	High	Low	High	Low	High	Low	High	Low	High
Dose = TRV	7.6E+00	1.8E+01	2.3E+00	5.2E+01	1.4E-02	8.8E+00	3.9E-02	1.8E-01	2.0E+00	2.0E+01	1.4E+00	5.6E+01	2.3E-01	9.3E-01
HQ	1.0E+00	1.0E+00	1.0E+00	1.0E+00	1.0E+00	1.0E+00	1.0E+00	1.0E+00	5.7E-01	5.7E-01	1.0E+00	1.0E+00	1.0E+00	1.0E+00

Table A-9
Ecological Comparison Values Based on the Red-Tailed Hawk and on DTSC-Recommended TRVs

Technical Memorandum 3: Ecological Comparison Values for Metals and PAHs in Soil
PG&E Topock
Needles, California

Protective Media Concentrations (mg/kg)	Silver mg/kg (dw)		Thallium mg/kg (dw)		Vanadium mg/kg (dw)		Zinc mg/kg (dw)		LMW PAHs mg/kg (dw)		HMW PAHs mg/kg (dw)	
	Low[5]	High[5]	Low[5]	High[5]	Low[5]	High[5]	Low[5]	High[5]	Low[5]	High[5]	Low[5]	High[5]
Sitewide ECVs												
Soil	1.4E+03	1.4E+04	3.5E+01	3.5E+02	1.6E+02	3.3E+02	5.2E+03	1.4E+05	2.1E+04	2.1E+05	9.0E+03	9.0E+04
Plant tissue	0.0E+00	0.0E+00	0.0E+00	0.0E+00	0.0E+00	0.0E+00	0.0E+00	0.0E+00	0.0E+00	0.0E+00	0.0E+00	0.0E+00
Invertebrate tissue	0.0E+00	0.0E+00	0.0E+00	0.0E+00	0.0E+00	0.0E+00	0.0E+00	0.0E+00	0.0E+00	0.0E+00	0.0E+00	0.0E+00
Prey (mammal) tissue	5.7E+00	5.7E+01	3.9E+00	3.9E+01	2.0E+00	4.1E+00	1.4E+02	1.8E+02	0.0E+00	0.0E+00	0.0E+00	0.0E+00
Bioaccumulation Factors (BAFs)[1]												
Soil-to-Plants	--		--		--		--		--		--	
Soil-to-Invertebrates	--		--		--		--		--		--	
Soil-to-Mammals	4.0E-03		1.1E-01		1.2E-02		ln(Cm) = 0.0706 * ln(Cs) + 4.3632		0.0E+00		0.0E+00	
Dose Calulations for Target Hazard Quotients (HQs)[2]												
	Low	High	Low	High	Low	High	Low	High	Low	High	Low	High
Dose = TRV	2.0E+00	2.0E+01	3.5E-01	3.5E+00	3.4E-01	6.9E-01	1.7E+01	1.7E+02	2.3E+01	2.3E+02	1.0E+01	1.0E+02
HQ	1.0E+00	1.0E+00	1.0E+00	1.0E+00	1.0E+00	1.0E+00	1.0E+00	1.0E+00	1.0E+00	1.0E+00	1.0E+00	1.0E+00

Table A-10
Ecological Comparison Values Based on the Desert Shrew and on DTSC-Recommended TRVs

Technical Memorandum 3: Ecological Comparison Values for Metals and PAHs in Soil
PG&E Topock
Needles, California

Protective Media Concentrations (mg/kg)	Antimony mg/kg (dw)		Arsenic mg/kg (dw)		Barium mg/kg (dw)		Beryllium mg/kg (dw)		Cadmium mg/kg (dw)		Chromium mg/kg (dw)		Hexavalent Chromium mg/kg (dw)	
	Low[4]	High[4]	Low[4]	High[4]	Low[4]	High[4]	Low[4]	High[4]	Low[4]	High[4]	Low[4]	High[4]	Low[4]	High[4]
Sitewide ECVs														
Soil	2.8E-01	2.8E+00	1.1E+01	3.7E+02	2.3E+03	3.7E+03	4.0E+01	4.8E+01	1.5E-02	1.8E+00	3.6E+01	1.5E+02	1.4E+02	5.9E+02
Plant tissue	0.0E+00	0.0E+00	0.0E+00	0.0E+00	0.0E+00	0.0E+00	0.0E+00	0.0E+00	0.0E+00	8.5E-01	0.0E+00	0.0E+00	0.0E+00	0.0E+00
Invertebrate tissue	2.8E-01	2.8E+00	1.3E+00	1.6E+01	2.1E+02	3.3E+02	1.8E+00	2.1E+00	3.0E-01	1.3E+01	1.1E+01	4.4E+01	4.27E+01	1.8E+02
Prey (mammal) tissue	0.0E+00	0.0E+00	0.0E+00	0.0E+00	0.0E+00	0.0E+00	0.0E+00	0.0E+00	0.0E+00	0.0E+00	0.0E+00	0.0E+00	0.0E+00	0.0E+00
Bioaccumulation Factors (BAFs)[1]														
Soil-to-Plants	--		--		--		--		--		--		--	
Soil-to-Invertebrates	1.0E+00		ln(Ci) = 0.706 * ln(Cs) - 1.421		9.1E-02		4.5E-02		ln(Ci) = 0.795 * ln(Cs) + 2.114		3.1E-01		3.1E-01	
Soil-to-Mammals	--		--		--		--		--		--		--	
Dose Calulations for Target Hazard Quotients (HQs)[2]														
	Low	High	Low	High	Low	High	Low	High	Low	High	Low	High	Low	High
Dose = TRV	5.9E-02	5.9E-01	3.2E-01	4.7E+00	5.2E+01	8.3E+01	5.3E-01	6.3E-01	6.0E-02	2.6E+00	2.4E+00	9.6E+00	9.2E+00	3.9E+01
HQ	1.0E+00	1.0E+00	1.0E+00	1.0E+00	1.0E+00	1.0E+00	1.0E+00	1.0E+00	1.0E+00	1.0E+00	1.0E+00	1.0E+00	1.0E+00	1.0E+00

Exposure Paramater[3]	value	units
Food Ingestion Rate (FIR	0.00102	kg tissue/day
Soil Ingestion Rate (SIR)	0.0000203	kg soil/day
Plant Ingestion Fraction (F_{food})	0%	Percent
Invertebrate Ingestion Fraction (F_{food})	100%	Percent
Mammal Ingestion Fraction (F_{food})	0%	Percent
Home Range	0.1	Acres
Site Use Factor (SUF)	1.00	Unitless
Body Weight (BW)	0.005	kgBW

Microsoft Solver used to calculate ECVs based one re-arranging the standard HQ equation (USEPA, 1997) below:

$$ECV = \frac{HQ \times TRV}{Dose} = \left(\frac{1 \times TRV \times BW}{SIR + (FIR \times BAF) \times SUF} \right)$$

Notes:

soil ECV.

1 bioaccumulation factors (BAFs; kilograms soil per kilogram tissue [kg soil/kg tissue]); from Table 2.
2 exposure parameters from Table 6-3 of the *Human Health and Ecological Risk Assessment Work Plan* (ARCADIS, 2008).
3 dose caluated for a target HQ of 1 (NOAEL and LOAEL based).
4 Low and High ECVs based on low and high TRVs (from Table 4), respectively.

ECV ecological comparison value for soil.
DTSC Department of Toxic Substances Control.
dw dry weight.
High lowest-observed adverse effects level (LOAEL).
HMW PAHs high molecular weight polycyclic aromatic hydrocarbons.
kg kilograms.
kg/day kilograms per day.
LMW PAHs low molecular weight polycyclic aromatic hydrocarbons.
Low no-observed adverse effects level (NOAEL).
mg/kg milligrams per kilogram.
mg/kg-bw/day milligrams per kilogram body weight per day.
NA not available or not applicable.

Table A-10
Ecological Comparison Values Based on the Desert Shrew and on DTSC-Recommended TRVs

Technical Memorandum 3: Ecological Comparison Values for Metals and PAHs in Soil
PG&E Topock
Needles, California

Protective Media Concentrations (mg/kg)	Cobalt mg/kg (dw)		Copper mg/kg (dw)		Lead mg/kg (dw)		Mercury mg/kg (dw)		Molybdenum mg/kg (dw)		Nickel mg/kg (dw)		Selenium mg/kg (dw)	
	Low[4]	High[4]	Low[4]	High[4]	Low[4]	High[4]	Low[4]	High[4]	Low[4]	High[4]	Low[4]	High[4]	Low[4]	High[4]
Sitewide ECVs														
Soil	4.2E+01	6.9E+02	2.5E+01	5.8E+03	9.0E+00	7.2E+03	2.1E+00	5.9E+02	2.2E+00	2.2E+01	6.1E-01	1.4E+02	1.8E-01	1.1E+01
Plant tissue	0.0E+00	0.0E+00	0.0E+00	0.0E+00	0.0E+00	0.0E+00	0.0E+00	0.0E+00	0.0E+00	0.0E+00	0.0E+00	0.0E+00	0.0E+00	0.0E+00
Invertebrate tissue	5.1E+00	8.5E+01	1.3E+01	3.0E+03	4.7E+00	1.0E+03	1.2E+00	7.9E+00	1.2E+00	1.2E+01	6.4E-01	1.5E+02	2.4E-01	5.7E+00
Prey (mammal) tissue	0.0E+00	0.0E+00	0.0E+00	0.0E+00	0.0E+00	0.0E+00	0.0E+00	0.0E+00	0.0E+00	0.0E+00	0.0E+00	0.0E+00	0.0E+00	0.0E+00
Bioaccumulation Factors (BAFs)[1]														
Soil-to-Plants	--		--		--		--		--		--		--	
Soil-to-Invertebrates	1.2E-01		5.2E-01		ln(Ci) = 0.807 * ln(Cs) - 0.218		ln(Ci) = 0.3369 * ln(Cs) - 0.078		5.5E-01		1.1E+00		ln(Ci) = 0.733 * ln(Cs) - 0.075	
Soil-to-Mammals	--		--		--		--		--		--		--	
Dose Calulations for Target Hazard Quotients (HQs)[2]														
	Low	High	Low	High	Low	High	Low	High	Low	High	Low	High	Low	High
Dose = TRV	1.2E+00	2.0E+01	2.7E+00	6.3E+02	1.0E+00	2.4E+02	2.5E-01	4.0E+00	2.6E-01	2.6E+00	1.3E-01	3.2E+01	5.0E-02	1.2E+00
HQ	1.0E+00	1.0E+00	1.0E+00	1.0E+00	1.0E+00	1.0E+00	1.0E+00	1.0E+00	1.0E+00	1.0E+00	1.0E+00	1.0E+00	1.0E+00	1.0E+00

Table A-10
Ecological Comparison Values Based on the Desert Shrew and on DTSC-Recommended TRVs

Technical Memorandum 3: Ecological Comparison Values for Metals and PAHs in Soil
PG&E Topock
Needles, California

Protective Media Concentrations (mg/kg)	Silver mg/kg (dw)		Thallium mg/kg (dw)		Vanadium mg/kg (dw)		Zinc mg/kg (dw)		LMW PAHs mg/kg (dw)		HMW PAHs mg/kg (dw)	
	Low[4]	High[4]	Low[4]	High[4]	Low[4]	High[4]	Low[4]	High[4]	Low[4]	High[4]	Low[4]	High[4]
Sitewide ECVs												
Soil	2.1E+01	2.1E+02	4.1E+00	1.2E+01	3.3E+02	6.6E+02	1.6E-01	1.1E+04	8.0E+01	2.4E+02	2.5E+00	6.2E+01
Plant tissue	0.0E+00	0.0E+00	0.0E+00	0.0E+00	0.0E+00	0.0E+00	0.0E+00	0.0E+00	0.0E+00	0.0E+00	4.3E-01	9.0E+00
Invertebrate tissue	4.3E+01	4.3E+02	2.3E+00	6.8E+00	1.4E+01	2.8E+01	4.7E+01	1.8E+03	2.4E+02	7.3E+02	6.4E+00	1.6E+02
Prey (mammal) tissue	0.0E+00	0.0E+00	0.0E+00	0.0E+00	0.0E+00	0.0E+00	0.0E+00	0.0E+00	0.0E+00	0.0E+00	0.0E+00	0.0E+00
Bioaccumulation Factors (BAFs)[1]												
Soil-to-Plants	--		--		--		--		--		--	
Soil-to-Invertebrates	2.0E+00		5.5E-01		4.2E-02		ln(Ci) = 0.328 * ln(Cs) + 4.449		3.0E+00		2.6E+00	
Soil-to-Mammals	--		--		--		--		--		--	
Dose Calulations for Target Hazard Quotients (HQs)[2]												
	Low	High	Low	High	Low	High	Low	High	Low	High	Low	High
Dose = TRV	8.8E+00	8.8E+01	4.8E-01	1.4E+00	4.2E+00	8.3E+00	9.6E+00	4.1E+02	5.0E+01	1.5E+02	1.3E+00	3.3E+01
HQ	1.0E+00	1.0E+00	1.0E+00	1.0E+00	1.0E+00	1.0E+00	1.0E+00	1.0E+00	1.0E+00	1.0E+00	1.0E+00	1.0E+00

Table A-11
Ecological Comparison Values for Merriam's Kangaroo Rat and DTSC-Recommended TRVs

Technical Memorandum 3: Ecological Comparison Values for Metals and PAHs in Soil
PG&E Topock
Needles, California

Protective Media Concentrations (mg/kg)	Antimony mg/kg (dw)		Arsenic mg/kg (dw)		Barium mg/kg (dw)		Beryllium mg/kg (dw)		Cadmium mg/kg (dw)		Chromium mg/kg (dw)		Hexavalent Chromium mg/kg (dw)	
	Low[4]	High[4]	Low[4]	High[4]	Low[4]	High[4]	Low[4]	High[4]	Low[4]	High[4]	Low[4]	High[4]	Low[4]	High[4]
Sitewide ECVs														
Soil	1.2E+01	1.4E+02	6.3E+01	9.3E+02	3.5E+03	5.6E+03	2.3E+01	2.9E+01	1.2E+00	5.4E+02	4.5E+02	1.8E+03	1.7E+03	7.3E+03
Plant tissue	4.2E-01	3.9E+00	2.4E+00	3.5E+01	5.5E+02	8.7E+02	5.9E+00	7.0E+00	7.0E-01	1.9E+01	1.8E+01	7.4E+01	7.1E+01	3.0E+02
Invertebrate tissue	0.0E+00	0.0E+00	0.0E+00	0.0E+00	0.0E+00	0.0E+00	0.0E+00	4.6E+00	0.0E+00	0.0E+00	0.0E+00	0.0E+00	0.0E+00	0.0E+00
Prey (mammal) tissue	0.0E+00	0.0E+00	0.0E+00	0.0E+00	0.0E+00	0.0E+00	0.0E+00	0.0E+00	0.0E+00	0.0E+00	0.0E+00	0.0E+00	0.0E+00	0.0E+00
Bioaccumulation Factors (BAFs)[1]														
Soil-to-Plants	ln(Cp) = 0.938 * ln(Cs) - 3.233		3.8E-02		1.6E-01		ln(Cp) = 0.7345 * ln(Cs) - 0.5361		ln(Cp) = 0.546 * ln(Cs) - 0.475		4.1E-02		4.1E-02	
Soil-to-Invertebrates	--		--		--		--		--		--		--	
Soil-to-Mammals	--		--		--		--		--		--		--	
Dose Calulations for Target Hazard Quotients (HQs)[2]														
	Low	High	Low	High	Low	High	Low	High	Low	High	Low	High	Low	High
Dose = TRV	5.9E-02	5.9E-01	3.2E-01	4.7E+00	5.2E+01	8.3E+01	5.3E-01	6.3E-01	6.0E-02	2.6E+00	2.4E+00	9.6E+00	9.2E+00	3.9E+01
HQ	1.0E+00	1.0E+00	1.0E+00	1.0E+00	1.0E+00	1.0E+00	1.0E+00	1.0E+00	1.0E+00	1.0E+00	1.0E+00	1.0E+00	1.0E+00	1.0E+00

Exposure Paramater[3]	value	units
Food Ingestion Rate (FIR	0.00282	kg tissue/day
Soil Ingestion Rate (SIR)	0.0000677	kg soil/day
Plant Ingestion Fraction (F_{food})	100%	Percent
Invertebrate Ingestion Fraction (F_{food})	0%	Percent
Mammal Ingestion Fraction (F_{food})	0%	Percent
Home Range	0.13	Acres
Site Use Factor (SUF)	1.00	Unitless
Body Weight (BW)	0.0343	kgBW

Microsoft Solver used to calculate ECVs based one re-arranging the standard HQ equation (USEPA, 1997) below:

$$ECV = \frac{HQ \times TRV}{Dose} = \left(\frac{1 \times TRV \times BW}{SIR + (FIR \times BAF) \times SUF} \right)$$

Notes:

soil ECV.

1 bioaccumulation factors (BAFs; kilograms soil per kilogram tissue [kg soil/kg tissue]); from Table 2.

2 exposure parameters from Table 6-3 of the *Human Health and Ecological Risk Assessment Work Plan* (ARCADIS, 2008).

3 dose caluated for a target HQ of 1 (NOAEL and LOAEL based).

4 Low and High ECVs based on low and high TRVs (from Table 4), respectively.

ECV	ecological comparison value for soil.
DTSC	Department of Toxic Substances Control.
dw	dry weight.
High	lowest-observed adverse effects level (LOAEL).
HMW PAHs	high molecular weight polycyclic aromatic hydrocarbons.
kg	kilograms.
kg/day	kilograms per day.
LMW PAHs	low molecular weight polycyclic aromatic hydrocarbons.
Low	no-observed adverse effects level (NOAEL).
mg/kg	milligrams per kilogram.
mg/kg-bw/day	milligrams per kilogram body weight per day.
NA	not available or not applicable.

Table A-11
Ecological Comparison Values for Merriam's Kangaroo Rat and DTSC-Recommended TRVs

Technical Memorandum 3: Ecological Comparison Values for Metals and PAHs in Soil
PG&E Topock
Needles, California

Protective Media Concentrations (mg/kg)	Cobalt mg/kg (dw)		Copper mg/kg (dw)		Lead mg/kg (dw)		Mercury mg/kg (dw)		Molybdenum mg/kg (dw)		Nickel mg/kg (dw)		Selenium mg/kg (dw)	
	Low[4]	High[4]	Low[4]	High[4]	Low[4]	High[4]	Low[4]	High[4]	Low[4]	High[4]	Low[4]	High[4]	Low[4]	High[4]
Sitewide ECVs														
Soil	4.6E+02	7.7E+03	4.5E+02	3.1E+05	2.6E+02	1.1E+05	3.0E+01	1.3E+03	1.2E+01	1.2E+02	2.2E+01	1.1E+04	1.1E+00	2.0E+01
Plant tissue	3.5E+00	5.8E+01	2.2E+01	2.8E+02	6.0E+00	1.8E+02	2.3E+00	1.8E+01	2.9E+00	2.9E+01	1.1E+00	1.2E+02	5.8E-01	1.4E+01
Invertebrate tissue	0.0E+00	0.0E+00	0.0E+00	0.0E+00	0.0E+00	0.0E+00	0.0E+00	0.0E+00	0.0E+00	0.0E+00	0.0E+00	0.0E+00	0.0E+00	0.0E+00
Prey (mammal) tissue	0.0E+00	0.0E+00	0.0E+00	0.0E+00	0.0E+00	0.0E+00	0.0E+00	0.0E+00	0.0E+00	0.0E+00	0.0E+00	0.0E+00	0.0E+00	0.0E+00
Bioaccumulation Factors (BAFs)[1]														
Soil-to-Plants	7.5E-03		ln(Cp) = 0.394 * ln(Cs) + 0.668		ln(Cp) = 0.561 * ln(Cs) - 1.328		ln(Cp) = 0.544 * ln(Cs) - 0.996		2.5E-01		ln(Cp) = 0.748 * ln(Cs) - 2.223		ln(Cp) = 1.104 * ln(Cs) - 0.677	
Soil-to-Invertebrates	--		--		--		--		--		--		--	
Soil-to-Mammals	--		--		--		--		--		--		--	
Dose Calulations for Target Hazard Quotients (HQs)[2]														
	Low	High	Low	High	Low	High	Low	High	Low	High	Low	High	Low	High
Dose = TRV	1.2E+00	2.0E+01	2.7E+00	6.3E+02	1.0E+00	2.4E+02	2.5E-01	4.0E+00	2.6E-01	2.6E+00	1.3E-01	3.2E+01	5.0E-02	1.2E+00
HQ	1.0E+00	1.0E+00	1.0E+00	1.0E+00	1.0E+00	1.0E+00	1.0E+00	1.0E+00	1.0E+00	1.0E+00	1.0E+00	1.0E+00	1.0E+00	1.0E+00

Table A-11
Ecological Comparison Values for Merriam's Kangaroo Rat and DTSC-Recommended TRVs

Technical Memorandum 3: Ecological Comparison Values for Metals and PAHs in Soil
PG&E Topock
Needles, California

Protective Media Concentrations (mg/kg)	Silver mg/kg (dw)		Thallium mg/kg (dw)		Vanadium mg/kg (dw)		Zinc mg/kg (dw)		LMW PAHs mg/kg (dw)		HMW PAHs mg/kg (dw)	
	Low[4]	High[4]	Low[4]	High[4]	Low[4]	High[4]	Low[4]	High[4]	Low[4]	High[4]	Low[4]	High[4]
Sitewide ECVs												
Soil	2.7E+03	2.7E+04	2.1E+02	6.2E+02	1.8E+03	3.5E+03	2.8E+02	9.4E+04	2.4E+04	7.4E+04	9.5E+01	2.8E+03
Plant tissue	3.8E+01	3.8E+02	8.3E-01	2.5E+00	8.5E+00	1.7E+01	1.1E+02	2.7E+03	2.6E+01	4.4E+01	1.4E+01	3.3E+02
Invertebrate tissue	0.0E+00	0.0E+00	0.0E+00	0.0E+00	0.0E+00	0.0E+00	0.0E+00	0.0E+00	0.0E+00	0.0E+00	0.0E+00	0.0E+00
Prey (mammal) tissue	0.0E+00	0.0E+00	0.0E+00	0.0E+00	0.0E+00	0.0E+00	0.0E+00	0.0E+00	0.0E+00	0.0E+00	0.0E+00	0.0E+00
Bioaccumulation Factors (BAFs)[1]												
Soil-to-Plants	1.4E-02		4.0E-03		4.9E-03		ln(Cp) = 0.554 * ln(Cs) + 1.575		ln(Cp) = 0.4544 * ln(Cs)-1.3205		ln(Cp) = 0.9469 * ln(Cs)-1.7026	
Soil-to-Invertebrates	--		--		--		--		--		--	
Soil-to-Mammals	--		--		--		--		--		--	
Dose Calulations for Target Hazard Quotients (HQs)[2]												
	Low	High	Low	High	Low	High	Low	High	Low	High	Low	High
Dose = TRV	8.4E+00	8.4E+01	4.8E-01	1.4E+00	4.2E+00	8.3E+00	9.6E+00	4.1E+02	5.0E+01	1.5E+02	1.3E+00	3.3E+01
HQ	1.0E+00	1.0E+00	1.0E+00	1.0E+00	1.0E+00	1.0E+00	1.0E+00	1.0E+00	1.0E+00	1.0E+00	1.0E+00	1.0E+00

Table A-12
Ecological Comparison Values Based on the Desert Kit Fox and DTSC-Recommended TRVs

Technical Memorandum 3: Ecological Comparison Values for Metals and PAHs in Soil
PG&E Topock
Needles, California

Protective Media Concentrations (mg/kg)	Antimony[4] mg/kg (dw)		Arsenic mg/kg (dw)		Barium[4] mg/kg (dw)		Beryllium[4] mg/kg (dw)		Cadmium mg/kg (dw)		Chromium mg/kg (dw)		Hexavalent Chromium mg/kg (dw)	
	Low[5]	High[5]	Low[5]	High[5]	Low[5]	High[5]	Low[5]	High[5]	Low[5]	High[5]	Low[5]	High[5]	Low[5]	High[5]
Sitewide ECVs														
Soil	2.1E+01	2.1E+02	2.9E+02	4.5E+03	4.1E+04	6.6E+04	1.9E+02	2.3E+02	1.9E+01	2.3E+03	1.1E+03	5.3E+03	5.0E+03	2.5E+04
Plant tissue	0.0E+00	0.0E+00	0.0E+00	0.0E+00	0.0E+00	0.0E+00	0.0E+00	0.0E+00	0.0E+00	0.0E+00	0.0E+00	0.0E+00	0.0E+00	0.0E+00
Invertebrate tissue	0.0E+00	0.0E+00	0.0E+00	0.0E+00	0.0E+00	0.0E+00	0.0E+00	0.0E+00	0.0E+00	0.0E+00	0.0E+00	0.0E+00	0.0E+00	0.0E+00
Prey (mammal) tissue	1.1E+00	1.1E+01	8.2E-01	7.7E+00	2.8E+01	4.5E+01	4.3E-01	5.1E-01	1.2E+00	1.1E+01	3.8E+01	1.2E+02	1.2E+02	3.9E+02
Bioaccumulation Factors (BAFs)[1]														
Soil-to-Plants	--		--		--		--		--		--		--	
Soil-to-Invertebrates	--		--		--		--		--		--		--	
Soil-to-Mammals	0.05 * Cd		ln(Cm) = 0.8188 * ln(Cs) -4.8471		0.0075 * Cd		0.05 * Cd		ln(Cm) = 0.4723 * ln(Cs) - 1.2571		ln(Cm) = 0.7338 * ln(Cs) - 1.4599		ln(Cm) = 0.7338 * ln(Cs) - 1.4599	
Dose Calulations for Target Hazard Quotients (HQs)[2]														
	Low	High	Low	High	Low	High	Low	High	Low	High	Low	High	Low	High
Dose = TRV	5.9E-02	5.9E-01	3.2E-01	4.7E+00	4.2E+01	6.7E+01	2.1E-01	2.4E-01	6.0E-02	2.6E+00	2.4E+00	9.6E+00	9.2E+00	3.9E+01
HQ	1.0E+00	1.0E+00	1.0E+00	1.0E+00	8.1E-01	8.1E-01	3.9E-01	3.9E-01	1.0E+00	1.0E+00	1.0E+00	1.0E+00	1.0E+00	1.0E+00

Exposure Paramater[3]	value	units
Food Ingestion Rate (FIR	0.07020	kg tissue/day
Soil Ingestion Rate (SIR)	0.0019656	kg soil/day
Plant Ingestion Fraction (F_{food})	0%	Percent
Invertebrate Ingestion Fraction (F_{food})	0%	Percent
Mammal Ingestion Fraction (F_{food})	100%	Percent
Home Range	3039	Acres
Site Use Factor (SUF)	1.00	Unitless
Body Weight (BW)	1.985	kgBW

Microsoft Solver used to calculate ECVs based one re-arranging the standard HQ equation (USEPA, 1997) below:

$$ECV = \frac{HQ \times TRV}{Dose} = \left(\frac{1 \times TRV \times BW}{SIR + (FIR \times BAF) \times SUF} \right)$$

Notes:

soil ECV.

1 bioaccumulation factors (BAFs; kilograms soil per kilogram tissue [kg soil/kg tissue]); from Table 2.

2 exposure parameters from Table 6-3 of the *Human Health and Ecological Risk Assessment Work Plan* (ARCADIS, 2008).

3 dose caluated for a target HQ of 1 (NOAEL and LOAEL based).

4 Low and High ECVs based on low and high TRVs (from Table 4), respectively.

ECV	ecological comparison value for soil.
DTSC	Department of Toxic Substances Control.
dw	dry weight.
High	lowest-observed adverse effects level (LOAEL).
HMW PAHs	high molecular weight polycyclic aromatic hydrocarbons.
kg	kilograms.
kg/day	kilograms per day.
LMW PAHs	low molecular weight polycyclic aromatic hydrocarbons.
Low	no-observed adverse effects level (NOAEL).
mg/kg	milligrams per kilogram.
mg/kg-bw/day	milligrams per kilogram body weight per day.
NA	not available or not applicable.

Table A-12
Ecological Comparison Values Based on the Desert Kit Fox and DTSC-Recommended TRVs

Technical Memorandum 3: Ecological Comparison Values for Metals and PAHs in Soil
PG&E Topock
Needles, California

Protective Media Concentrations (mg/kg)	Cobalt mg/kg (dw)		Copper mg/kg (dw)		Lead mg/kg (dw)		Mercury mg/kg (dw)		Molybdenum[4] mg/kg (dw)		Nickel mg/kg (dw)		Selenium mg/kg (dw)	
	Low[5]	High[5]	Low[5]	High[5]	Low[5]	High[5]	Low[5]	High[5]	Low[5]	High[5]	Low[5]	High[5]	Low[5]	High[5]
Sitewide ECVs														
Soil	3.5E+02	3.4E+03	1.9E+03	6.4E+05	4.4E+02	2.3E+05	3.2E+01	5.1E+02	2.2E+01	2.2E+02	2.0E+01	2.9E+04	5.6E+00	9.2E+02
Plant tissue	0.0E+00	0.0E+00	0.0E+00	0.0E+00	0.0E+00	0.0E+00	0.0E+00	0.0E+00	0.0E+00	0.0E+00	0.0E+00	0.0E+00	0.0E+00	0.0E+00
Invertebrate tissue	0.0E+00	0.0E+00	0.0E+00	0.0E+00	0.0E+00	0.0E+00	0.0E+00	0.0E+00	0.0E+00	0.0E+00	0.0E+00	0.0E+00	0.0E+00	0.0E+00
Prey (mammal) tissue	2.4E+01	4.7E+02	2.3E+01	5.3E+01	1.6E+01	2.6E+02	6.2E+00	9.9E+01	3.7E+00	3.7E+01	3.2E+00	9.3E+01	1.3E+00	8.6E+00
Bioaccumulation Factors (BAFs)[1]														
Soil-to-Plants	--		--		--		--		--		--		--	
Soil-to-Invertebrates	--		--		--		--		--		--		--	
Soil-to-Mammals	ln(Cm) = 1.307 * ln(Cs) - 4.4669		ln(Cm) = 0.1444 * ln(Cs) + 2.042		ln(Cm) = 0.4422 * ln(Cs) + 0.0761		1.9E-01		0.006 * 50 * Cd		ln(Cm) = 0.4658 * ln(Cs) - 0.2462		ln(Cm) = 0.3764 * ln(Cs) - 0.4158	
Dose Calulations for Target Hazard Quotients (HQs)[2]														
	Low	High	Low	High	Low	High	Low	High	Low	High	Low	High	Low	High
Dose = TRV	1.2E+00	2.0E+01	2.7E+00	6.3E+02	1.0E+00	2.4E+02	2.5E-01	4.0E+00	1.5E-01	1.5E+00	1.3E-01	3.2E+01	5.0E-02	1.2E+00
HQ	1.0E+00	1.0E+00	1.0E+00	1.0E+00	1.0E+00	1.0E+00	1.0E+00	1.0E+00	5.9E-01	5.9E-01	1.0E+00	1.0E+00	1.0E+00	1.0E+00

Table A-12
Ecological Comparison Values Based on the Desert Kit Fox and DTSC-Recommended TRVs

Technical Memorandum 3: Ecological Comparison Values for Metals and PAHs in Soil
PG&E Topock
Needles, California

Protective Media Concentrations (mg/kg)	Silver mg/kg (dw)		Thallium mg/kg (dw)		Vanadium mg/kg (dw)		Zinc mg/kg (dw)		LMW PAHs mg/kg (dw)		HMW PAHs mg/kg (dw)	
	Low[5]	High[5]	Low[5]	High[5]	Low[5]	High[5]	Low[5]	High[5]	Low[5]	High[5]	Low	High
Sitewide ECVs												
Soil	5.3E+03	5.3E+04	9.7E+01	2.9E+02	2.9E+03	5.8E+03	4.6E+03	4.1E+05	5.0E+04	1.5E+05	1.3E+03	3.3E+04
Plant tissue	0.0E+00	0.0E+00	0.0E+00	0.0E+00	0.0E+00	0.0E+00	0.0E+00	0.0E+00	0.0E+00	0.0E+00	0.0E+00	0.0E+00
Invertebrate tissue	0.0E+00	0.0E+00	0.0E+00	0.0E+00	0.0E+00	0.0E+00	0.0E+00	0.0E+00	0.0E+00	0.0E+00	0.0E+00	0.0E+00
Prey (mammal) tissue	2.1E+01	2.1E+02	1.1E+01	3.2E+01	3.6E+01	7.2E+01	1.4E+02	2.0E+02	0.0E+00	0.0E+00	0.0E+00	0.0E+00
Bioaccumulation Factors (BAFs)[1]												
Soil-to-Plants	--		--		--		--		--		--	
Soil-to-Invertebrates	--		--		--		--		--		--	
Soil-to-Mammals	4.0E-03		1.1E-01		1.2E-02		ln(Cm) = 0.0706 * ln(Cs) + 4.3632		0.0E+00		0.0E+00	
Dose Calulations for Target Hazard Quotients (HQs)[2]												
	Low	High	Low	High	Low	High	Low	High	Low	High	Low	High
Dose = TRV	6.0E+00	6.0E+01	4.8E-01	1.4E+00	4.2E+00	8.3E+00	9.6E+00	4.1E+02	5.0E+01	1.5E+02	1.3E+00	3.3E+01
HQ	1.0E+00	1.0E+00	1.0E+00	1.0E+00	1.0E+00	1.0E+00	1.0E+00	1.0E+00	1.0E+00	1.0E+00	1.0E+00	1.0E+00

Operation and Maintenance Manual

Volume 5

Operation and Maintenance Health and Safety Plan for the Final Groundwater Remedy

Final (100%) Design Submittal for the Final Groundwater Remedy

PG&E Topock Compressor Station Needles, California

Prepared by

Pacific Gas and Electric Company

November 2015

Contents

Operation and Maintenance Health & Safety Plan 1
Introduction 1
EIR Mitigation Measure HAZ-2 1
HAZ-2 Reasonably Foreseeable Releases of Chemicals from Excavated or Disturbed Soil. 1
O&M Staffing Plan and HSP Requirements 2
PG&E Employee HSP Requirements 2
PG&E Safety Principles 3
Timing for Issuing Final O&M HSP(s) 4

PG&E Safety and Health Program Standard

Material Safety Data Sheets

- NuWell 120
- NuWell 310

Operation and Maintenance Health & Safety Plan

Introduction

Health and Safety Plans (HSPs) are required by Environmental Impact Report (EIR) Mitigation Measure HAZ-2 and must be in place prior to the initiation of ground disturbing activities at the site. A separately-prepared Construction Health and Safety Plan (Construction HSP) covers all of the requirements of HAZ-2 during the construction period of the Final Groundwater Remedy (see Appendix D to the Construction/Remedial Action Work Plan). The purpose of the Operation and Maintenance (O&M) HSP is to comply with HAZ-2 requirements during the remedy O&M.

EIR Mitigation Measure HAZ-2

HAZ-2 Reasonably Foreseeable Releases of Chemicals from Excavated or Disturbed Soil.

Before initiating ground-disturbing operations, a health and safety plan shall be developed and implemented by qualified environmental professionals to ensure health and safety precautions are being met. It is not possible to prepare the health and safety plan at this stage of the planning process because final construction plans and other design documents have not been finalized in sufficient detail. However, at a minimum, the health and safety plan shall include procedures to mitigate potential hazards, and such procedures shall include the use of PPE, measures that provide protection from physical hazards, measures that provide protection from chemical hazards that may be present at the site, decontamination procedures, and worker and health and safety monitoring criteria to be implemented during construction. The worker health and safety plan shall include protective measures and PPE that are specific to the conditions of concern and meet the requirements of the U.S. Occupational Safety and Health Administration's (OSHA's) construction safety requirements and Hazardous Waste Operations and Emergency Response Standard (29 CFR 1910.120). In accordance with OSHA requirements, appropriate training and recordkeeping shall also be a part of the health and safety program. The worker health and safety plan shall be certified by a Certified Industrial Hygienist in accordance with OSHA regulations. The worker health and safety plan shall be explained to the construction workers and all workers shall be required to sign the plan, which will be kept on the construction site at all times.

Worker safety training shall occur prior to initiation of ground disturbing activities. Training shall include the review of all health and safety measures and procedures. All workers and engineering inspectors at the site shall provide written acknowledgement that the soils management plan (discussed below), worker health and safety plan, and community health and safety plan were reviewed and training was received prior to commencement of construction activities.

The following are specific elements and directives that shall be included in the health and safety plan and implemented by PG&E during construction, operation and maintenance, and decommissioning of this project:

a. Vehicles traveling on unpaved roadways or surfaces would be directed to avoid traveling in areas where contaminated soils are known to be present; vehicle speeds shall be controlled (e.g., limited to 15 mph or slower) to limit generation of dust; measures, such as wetting of surfaces, will be employed to prevent dust generation by vehicular traffic or other dust-generating work activities.

b. Pre-mobilization planning shall occur during which the likelihood of encountering contaminated soils shall be reviewed along with the HMBP, site-specific health and safety plan, and SOPs so that the procedures are followed and the contingencies for handling contaminated soils are in-place prior to implementing the field operations.

c. Should evidence of contaminated soil be identified during ground disturbing activities (e.g., noxious odors, discolored soil), work in this area will immediately cease until soil samples can be collected and analyzed for the presence of contaminants by the site supervisor or the site safety officer. Contaminated soil shall be managed and disposed of in accordance with a project-specific health and safety plan and soil management plan. The health and safety plan and soil management plan shall be approved by DTSC before beginning any ground disturbing activities. While the project is exempt from the requirements of the San Bernardino County Division of Environmental Health, the health and safety plan and soil management plan shall be prepared in general accordance with the substantive requirements of this agency.

d. In the event that drilling sites must be located within areas of suspected soil contamination, the appropriate PPE shall be worn by all personnel working in these areas and methods specified in the health and safety plan used to control the generation of dust. When working in these areas, personnel shall be required to follow all guidance presented in the site-specific health and safety plan and soil management plan. The site-specific health and safety plan shall include provisions for site control such as, but not limited to, delineation of the exclusion, contaminant reduction and support zones for each work area, decontamination procedures, and procedures for the handling of contaminated soils and other investigation derived wastes. Soil that is excavated shall be loaded directly into containers such as roll-off bins; dust suppression methods shall be used prior to and during loading of soils into the bins. Suspected contaminated soils shall be segregated from suspected uncontaminated soils.

e. Personnel working at the site shall be trained in Hazardous Waste Operations.

All soil excavated and placed in roll-off bins or trucks for transportation off-site shall be covered with a tarp or rigid closure before transporting, and personnel working in the area shall be positioned upwind of the loading location.

O&M Staffing Plan and HSP Requirements

PG&E has not yet made a final determination about the nature of the onsite staffing of the future Remedy O&M functions. The onsite staff will consist of field workers, supervision, administrative support, compliance support, and technical support. Some or this entire staff will be PG&E employees. Some or this entire staff may be contractors.

If the Remedy is staffed by PG&E employees, a comprehensive PG&E employee-specific HSP will be developed that addresses all of PG&E's applicable safety standards, plus it must be consistent with the requirements of HAZ-2. The HSP for PG&E's Topock employees must comply with PG&E's requirements in the Section below.

If the Remedy is staffed entirely by contractor employees, the contractor will develop a site-specific H&SP that is compliant with the requirements in HAZ-2 and their corporate H&SP standards. PG&E will review and accept the contractors' plan(s), prior to work being initiated.

If the Remedy is staffed with a combination of PG&E employees and contractors, PG&E will establish a site-specific H&SP as described above and each contractor will be required to establish their own H&SPs which comply with the requirements above.

PG&E Employee HSP Requirements

PG&E employee work groups are required to follow PG&E's internal policies, standards, and procedures when developing HSPs. The current PG&E Standard is titled "Safety and Health Standard SAFE-1001S", last issued on February 28, 2013.

If a PG&E employee HSP is needed (because PG&E employees are providing O&M services for the Remedy), PG&E's safety policies, standards, and procedures will be used for developing the O&M HSP prior to operation of the Remedy.

PG&E Safety Principles

PG&E has a long and proud history for promoting workplace safety. One of the ways that PG&E communicates this commitment is by publicizing these Safety Principles, which are built into PG&E procedures and H&SPs. All employees are expected to embrace these principles:

Nothing is more important than public, employee and contractor safety.

- We must create an environment at PG&E where employees feel that they can raise all safety-related issues without peer pressure or fear of reprisal. This includes near hits and unsafe situations of any kind.
- We encourage open and honest communication on safety, so that we identify and eliminate unsafe situations and avoid incidents and injuries.
- To enhance safety and prevent future incidents, we have adopted a voluntary non-punitive self-reporting system for unsafe occurrences and hazardous situations.
- We acknowledge and recognize safe behavior and practices to encourage our employees, and to reinforce continuous learning.
- Safety discussions are used as an opportunity for learning and coaching. When an incident occurs, our first priority is to understand what happened and the underlying causes, not to discipline.
- We have adopted a behavior-based approach to discipline. Discipline will only be considered when employees act in a reckless manner, demonstrate a pattern of carelessness or non-compliance, put themselves, their coworkers or the public at risk by intentionally violating the Keys To Life or Code of Conduct.

PG&E's Safety Commitment

- We will train, equip and qualify our people to work safety.
- We will design, build, operate and maintain our systems with the highest regard for the safety and well-being of all.
- We will identify and address the underlying causes of incidents to prevent them from recurring.

Personal Safety Commitment

- I will make my personal safety and the safety of my co-workers and the public my highest priority.
- I will make sure I understand how to do the work safely before I start the job.
- I will speak up about safety concerns.
- I will look for safety hazards and intervene to stop unsafe acts.
- I will close out and properly document my work.

Keys to Life

To assure your safety and that of your co-workers and the public:

- Follow safe driving principles.
- Use appropriate life-saving personal protective equipment (PPE).
- Follow electrical safety testing and grounding rules.
- Follow clearance and energy lock-out rules.
- Follow confined space rules.
- Follow suspended load rules.
- Follow safety at heights rules.
- Follow excavation procedures.
- Follow hazardous environment procedures.

Timing for Issuing Final O&M HSP(s)

Final O&M HSP(s) will be submitted to DTSC and DOI by PG&E during the start-up phase of the remedy.

PG&E Safety and Health Program Standard

Safety and Health Program Standard

Summary This standard describes Pacific Gas and Electric Company's (PG&E's) Safety and Health Program, which each organization is to integrate into all business systems and work processes. This standard and its implementing procedures are PG&E's written Injury and Illness Prevention Program (IIPP), which is required under California law and or Federal Law.

Target Audience Officers, directors, and their designees, all of whom are responsible for integrating the Safety and Health Program into their business systems and work processes.

Safety Performing the procedures that implement this standard will diminish the risk of specific hazards to personnel, the public, and equipment.

Table of Contents

Subsection	Title	Page
1	Safety and Health Program Integration	2
2	Training	3
3	Human Performance Tools	4
4	Adequate Communication	6
5	Basic Safety Rules	6
6	Employee Involvement	6
7	Performance Management	6
8	Measurement and Evaluation	7
9	Records Management	7

©2013 Pacific Gas and Electric Company. All rights reserved.

Safety and Health Program Standard

Requirements

1 Safety and Health Program Integration

1.1 Each officer, director, and designee is responsible for developing and implementing plans to integrate the four steps of the Safety and Health Program into all business systems and work processes:

1. Identify hazards
2. Evaluate hazards
3. Control hazards
4. Evaluate controls

1.2 The following methods are to be used to develop and implement these plans to ensure employees are familiar with and comply with the Safety and Health Program:

1. Training
2. Human Performance Tools
3. Adequate Communication
4. Basic Safety Rules
5. Employee Involvement
6. Performance Management
7. Measurement and Evaluation
8. Records Management

©2013 Pacific Gas and Electric Company. All rights reserved.

Safety and Health Program Standard

2 Training

2.1 Training includes the following:

1. Incorporate the four steps of the Safety and Health Program

   a. Take proactive steps to identify hazards (see the following procedures):

      - SH&C Procedure 201, Hazard Evaluation and Control
      - SH&C Procedure 202, Incident Notification, Investigation, and Analysis
      - SH&C Procedure 203, Inspections
      - SH&C Procedure 206, Design and System/Change Management Review

   b. Evaluate the hazards (see the following procedures):

      - SH&C Procedure 201, Hazard Evaluation and Control
      - SH&C Procedure 204, Tracking and Trend Analysis
      - SH&C Procedure 221, Ergonomics Program

   c. Control the hazards (see the following procedures):

      - SH&C Procedure 201, Hazard Evaluation and Control
      - SH&C Procedure 202, Incident Notification, Investigation, and Analysis

   d. Evaluate the hazard controls (see the following procedures):

      - SH&C Procedure 201, Hazard Evaluation and Control
      - SH&C Procedure 202, Incident Notification, Investigation, and Analysis

2. Teach employees, about the hazards relevant to the business systems and work processes they deal with and how to implement the necessary hazard controls.

3. Train employees when the hazards they will face change.

4. Familiarize each employee with group participation techniques.

5. Ensure contractors and temporary agency workers receive similar training from their employers before starting work for PG&E.

©2013 Pacific Gas and Electric Company. All rights reserved.

Safety and Health Program Standard

3 Human Performance Tools

3.1 Human performance tools found in the Safety & Performance Fundamentals Handbook include the following:

1. Tailboards

   a. Ensure organization leaders provide tailboards before performing work and when work conditions change.

   b. Include the task purpose, scope, sequence and nature of the work.

   c. Review applicable procedures, drawings, documents, prerequisites, or any other items needed to perform the work.

   d. Use three-way communication to validate that task assignments are understood and roles and responsibilities for the work are clear. This includes limits of the required work; work hand-offs, controlling authority or person-in-charge as, and emergency procedures and contacts.

2. Two-Minute Rule

   . Coach employees to STOP and take two-minutes (two-minute rule) to think through the work/task and understand the hazards and the controls to improve situational awareness before beginning a task and to check for changing conditions.

3. Self-Checking STAR (Stop, Think, Act, and Review)

   a. Stop

      (1) Take the time to pause and focus on the task to be performed

      (2) Eliminate distractions

   b. Think

      (1) Think about the task to be performed

      (2) Understand what is to be done

      (3) Know the expected responses and indications of that action

      (4) Determine if the task is appropriate for the given conditions

      (5) Identify the correct component

      (6) Plan the actions to take if the response is not as expected

©2013 Pacific Gas and Electric Company. All rights reserved.

c . Act

(1) Perform the task

d . Review

(1) Evaluate the results of the action

(2) Verify the correct, expected response

(3) Take planned actions if the response is not as expected

4. Stop When Unsure

- When a question on the job or while performing work arises, creating uncertainty, stop and ask questions to understand what the work is, the hazards involved and how to perform the work.

5. Questioning Attitude

- Foster situational awareness, encouraging thought about safety before action is taken.

6. Procedure Use and Adherence

- Work is to be performed in accordance with approved procedures and supporting documents. Understanding the overall purpose and strategy of the procedure promotes safer outcomes.

7. Placekeeping

- Documents completion of procedural steps.

8. Phonetic Alphabet

- Use when communicating information related to equipment or components.

9. Three-Way Communication

- Promote a reliable transfer of information and understanding ensuring the correct action is taken.

©2013 Pacific Gas and Electric Company. All rights reserved.

Safety and Health Program Standard

4 Adequate Communication

1. Includes, but is not limited to the following:

   - Workgroup meetings
   - Jobsite tailboards
   - Inter-departmental agreements
   - Contract language
   - Bulletin board postings
   - Electronic media

2. Collect input from stakeholders and ensure they are informed of the outcome when participating in an industry or regulatory forum, such as the American Society for Testing and Materials (ASTM) or OSHA-Advisory committee.

5 Basic Safety Rules

- Inform employees that compliance with the Code of Safe Practices and the Safety and Performance Fundamentals Handbook is a condition of employment.

  a. Communicate updates or revisions to all standards, procedures, and rules relevant to the employees' work.

6 Employee Involvement

- Involve employees in the Safety and Health Program on an on-going basis.

- When specific safety and health issues are to be resolved, use Grass Roots Teams, chartered safety/ad hoc teams, or workgroups comprised of critical stakeholders.

7 Performance Management

- Integrate the Safety and Health Program into all work through individual job expectations and team charters.

- To define team expectations, use a charter that defines purpose, scope of authority, roles and responsibilities, communication and documentation requirements, and required resources.

- Hold individuals and teams accountable through recognition and disciplinary action. Use PG&E's Human Resources programs of Performance Management for management and applicable A&T employees and Positive Discipline for bargaining unit employees.

©2013 Pacific Gas and Electric Company. All rights reserved.

Safety and Health Program Standard

8 Measurement and Evaluation

- Establish goals to measure Safety and Health Program progress.
- Evaluate integration of the Safety and Health Program into all work through work site observations, inspections or other observations.

9 Records Management

- Document and maintain training records until subsequent training is provided to employees.
- Document and maintain all other Safety and Health Program records for at least three years. Records identified in the Guide to Record Retention must be maintained for the period of time specified.

END of Requirements

©2013 Pacific Gas and Electric Company. All rights reserved.

Safety and Health Program Standard

Definitions	A **hazard** is any existing or potential condition or act that can result in a loss such as death, injury, illness, or property damage.
Implementation Responsibilities	Each officer and director is responsible for implementing the Safety and Health Program within his or her organization and monitoring compliance with it. Safety is responsible for monitoring the company-wide compliance with this standard.
Governing Document	Safety and Health Policy
Compliance Requirement/ Regulatory Commitment	California Code of Regulations, Title 8, Section 3203 – Injury and Illness Prevention Program
Reference Documents	**Developmental References**: NA
	Supplemental References: • SH&C Procedure 201, Hazard Evaluation and Control • SH&C Procedure 202, Incident Notification, Investigation, and Analysis • SH&C Procedure 203, Inspections • SH&C Procedure 204, Tracking and Trend Analysis • SH&C Procedure 206, Design and System/Change Management Review • SH&C Procedure 221, Ergonomics Program • Code of Safe Practices (CSP) • Safety & Performance Fundamentals Handbook
Appendices	NA

©2013 Pacific Gas and Electric Company. All rights reserved.

Safety and Health Program Standard

Attachments NA

Document Recision Safety and Health Program, USP 22, dated 01/15/2009

Approved By Linda Limberg, Senior Director, Safety

Document Owners
Louis Renner,
Safety Programs Manager, Safety

Document Contact Louis Renner, Safety Programs Manager, Safety

Revision Notes

Where?	What Changed?
Tailboards – Section 3.1.1.d	Changed “two-way” communication to “three-way” communication.

©2013 Pacific Gas and Electric Company. All rights reserved.

Material Safety Data Sheets

NuWell 120

JOHNSON SCREENS

A Weatherford Company

Material Safety Data Sheet

SECTION 1 - CHEMICAL PRODUCT AND COMPANY INFORMATION

Product Name: NW-120
Part Number: **Chemical Family:** Inorganic acid

Manufacturer's Name: Johnson Screens / A Weatherford Company
Address: P.O. Box 64118 – St. Paul, MN 55164
Product/Technical Information Phone Number: 651-636-3900
Medical/Handling Emergency Phone Number: CHEMTREC 1-800-424-9300
Transportation Emergency Phone Number: CHEMTREC 1-800-424-9300

Issue Date: 06-06-03
Revision Date/Revision Number: 06-06-05 /01

SECTION 2 – COMPOSITION INFORMATION

	% by Weight	
Phosphoric Acid Orthophosphoric Acid (CAS # 7664-38-2)	65 – 80	Food Grade

SECTION 3 - HAZARDS IDENTIFICATION

Appearance & Odor: Colorless to lightly colored liquid; nil odor
Emergency Overview: Overexposure may aggravate disorders of the skin / respiratory system
Fire & Explosion Hazards: None currently known
Primary Route(s) of Exposure: Skin, eyes, digestive tract, respiratory system
Inhalation – Acute Effects: May cause irritation / coughing
Skin Contact – Acute Effects: May cause severe irritation; prolonged or repeated skin contact may cause burns, irreversible damage
Eye Contact – Acute Effects: May cause severe irritation / burns; prolonged or repeated eye contact may cause irreversible damage or blindness
Ingestion – Acute Effects: May cause irritation, burns, pain, nausea, vomiting, shock symptoms (rapid pulse, sweating, collapse)

SECTION 4 - FIRST AID MEASURES

Inhalation First Aid: Remove affected person from area to fresh air and provide oxygen if breathing is difficult. Give artificial respiration ONLY if breathing has stopped and give CPR ONLY if there is no breathing and no pulse. Obtain medical attention.

Skin Contact First Aid: Immediately remove clothing from affected area and wash skin for 15 minutes with flowing water and soap. Clothing should be discarded or washed before reuse. Obtain medical assistance if irritation develops.

Eye Contact First Aid: Immediately irrigate eyes with flowing water continuously for 15 minutes while holding eyes open. Contacts should be removed before or during flushing. Obtain medical attention immediately.

Ingestion First Aid: If victim is alert and not convulsing, rinse mouth with water and give plenty of water to drink. If spontaneous vomiting occurs, have affected person lean forward with head down to avoid breathing in of vomitus. Rinse mouth again and give more water to drink. Obtain medical attention.

Medical Conditions Aggravated: Persons with pre-existing skin disorders or eye problems, or impaired respiratory function may be more susceptible to the effects of the substance.

Note to Physician: May give oxygen if breathing difficulty following exposure. Observe for possible delayed reactions.

SECTION 5 - FIRE FIGHTING MEASURES

Flash Point/Method: N/A
Auto Ignition Temperature:
Upper/Lower Explosion Limits: Not determined
Extinguishing Media: Chemical type foam, CO_2 (Carbon Dioxide), dry chemical, water fog
Fire Fighting Procedures: Not considered a fire hazard
Fire & Explosion Hazards: Is not flammable, however the following can occur during a fire: phosphorus oxides and/or phosphine from thermal decomposition and hydrogen from reactive metals.
Hazardous Products of Decomposition and/or Combustion: Oxides of phosphorus
NFPA Ratings:

HEALTH	FLAMMABILITY	REACTIVITY	OTHER
3	0	0	

0 = Insignificant 1 = Slight 2 = Moderate 3 = High 4 = Extreme

SECTION 6 – ACCIDENTAL RELEASE MEASURES

Small spill: neutralize acid spill with alkali such as soda ash, sodium bicarbonate, limestone or lime. Absorb material with an inert material such as sand, vermiculite, diatomaceous earth or other absorbent material and place in chemical waste container to be disposed at an appropriate waste disposal facility according to current applicable laws and regulations and product characteristics at time of disposal. Adequate ventilation is required for soda ash due to the release of carbon dioxide gas. No smoking in spill area.

Large spill: contain with dikes and transfer the material to appropriate containers for reclamation or disposal. Absorb remaining spill with an inert material such as sand, vermiculite or other absorbent material and place in chemical waste container to be disposed at an appropriate waste disposal facility according to current applicable laws and regulations and product characteristics at time of disposal. Neutralize residue with alkali such as soda ash, sodium bicarbonate, limestone or lime. Adequate ventilation is required for soda ash due to the release of carbon dioxide gas. No smoking in spill area.

Release Notes: If spill could potentially enter any waterway, including intermittent dry creeks, contact the local authorities. If in the U.S., contact the US COAST GUARD NATIONAL RESPONSE CENTER toll free number 800-424-8802. In case of accident or road spill notify: CHEMTREC in USA at 800-424-9300; CANUTEC in Canada at 613-996-6666; CHEMTREC in other countries at (International code)+1-703-527-3887.

Comments: See Section 13 for disposal information and Section 15 for regulatory requirements. Large and small spills may have a broad definition depending on the user's handling system. Therefore, the spill category must be defined at the point of release by technically qualified personnel.

SECTION 7 – HANDLING AND STORAGE

Handling: For industrial use only. Heat is generated upon dilution with water. When diluting, add product slowly to water with agitation. Never add water to the acid as severe splashing and reactivity will result. Always add acid to water. ATTENTION: This container hazardous when emptied. Since emptied container contains product residues (vapor or liquid), all labeled hazard precautions must be observed.

Storage: Keep container closed when not in use. Keep out of reach of children.

General Comments: Wear protective equipment when handling. Use only with adequate ventilation. Wash thoroughly after handling. Do not breathe vapor, mist, or dust. Do not get in eyes, on skin, or clothing. Do not swallow.

SECTION 8 – PERSONAL PROTECTION/EXPOSURE CONTROL

Respiratory Protection: If exposure limits are exceeded, or if exposure may occur, use a NIOSH/MSHA respirator approved for your conditions of exposure. Refer to the most recent NIOSH publications concerning chemical hazards, or consult your safety equipment supplier. Respiratory protection programs must be in compliance with OSHA requirements in 29 CFR 1910.134. For emergencies, a NIOSH/MSHA approved positive pressure breathing apparatus should be readily available.

Skin Protection: Acid proof gloves; clean, body covering clothing; rubber apron; rubber boots

Eye Protection: Chemical goggles or faceshield (ANSI Z87.1 or approved equivalent). Always wear eye protection when working with chemicals. Do not wear contact lenses when working with chemicals.

Ventilation Protection: Adequate ventilation is required to minimize exposure or to maintain exposure levels below OSHA/ACGIH requirements. Mechanical general ventilation is usually adequate. Local mechanical ventilation may be required.

Other Protection: Safety shower, eye wash fountain, and washing facilities should be readily available. In case of emergency or when dusting, misting, or splashing may occur, wear respiratory protection, eye protection, gloves, helmet, boots, and complete protective body covering.

Exposure Limits:

OSHA TWA/TLV (ppm)	ACGIH TWA/TLV (ppm)	NIOSH	SUPPLIER
0.25	0.25		

SECTION 9 – PHYSICAL AND CHEMICAL PROPERTIES

Appearance & Odor: Colorless to lightly colored liquid, no odor

Vapor Pressure: 5.700 @ 68° F.
Vapor Density (Air=1): Not determined
Boiling Point: 275° F.
Melting Point: -17.5^{o} C (75% H_3PO_4)
Specific Gravity: 1.5850 @ 60° F.
Solubility in Water: Complete
Volatile Percentage: Not determined
pH: aqueous approx. 1.000 to 2.000
Flash Point/method: N/A
Auto Ignition Temperature: None
Upper/Lower Explosion Limits: Not determined
Other:

SECTION 10 - STABILITY AND REACTIVITY

Stability: Stable under normal conditions of storage and use
Incompatibilities: Inorganic bases, metals/metal blends; contact with some metals can generate explosive hydrogen gas
Polymerization: Will not occur
Decomposition: Oxides of phosphorus and/or phosphine from thermal decomposition and hydrogen gas from reaction with metals
Conditions to Avoid: High temperature

SECTION 11 - TOXICOLOGICAL INFORMATION

Inhalation – Acute: LC_{50} (guinea pig, mouse, rat, rabbit): 61-1,689 mg/m^3
Inhalation – Chronic:
Skin Contact – Acute: LD_{50} (rabbit): >1,260 to > 3,160 mg/kg
Skin Contact – Chronic:
Eye Contact – Acute:
Ingestion – Acute: LD_{50} (rat): 1,530 mg/kg
Ingestion – Chronic:
Carcinogenicity/Mutagenicity: No components present in excess of 0.1% by weight are listed as carcinogens by IARC, NTP, or OSHA
Reproductive Effects: 375 mg/kg bw did not affect offspring growth in rats
Neurotoxicity: None known
Other Effects: In vitro bacterial genetic toxicity negative
Target Organs: Overexposure may cause damage to all body tissues

SECTION 12 – ECOLOGICAL INFORMATION

Ecotoxicity: acute toxicity to fish: 96 hour LC_{50}: 3.0 – 3.5 mg/L
Acute toxicity to Daphnia: survival rate depends on pH

Environmental Fate: phosphoric acid undergoes ionic dissociation in water.

Toxicity: Moderately toxic to aquatic organisms as defined by USEPA

Degradation Products: while acidity of this material is readily reduced in natural waters, the resulting phosphate may persist indefinitely or incorporate into biological systems.

SECTION 13 – DISPOSAL CONSIDERATIONS

Material that cannot be used or chemically reprocessed and empty containers should be disposed of in accordance with all applicable regulations. Product containers should be thoroughly emptied before disposal. Generators of waste material are required to

evaluate all waste for compliance with RCRA and any local disposal procedures and regulations. NOTE: State and local regulations may be more stringent than federal regulations.

SECTION 14 – TRANSPORTATION INFORMATION

DOT Shipping Description:

Proper Shipping Name: Phosphoric Acid
Hazard Class: 8, UN1805, PG III
Label Requirements: CORROSIVE
Reportable Quantity: None

European Transportation: ADR/RID Hazard Classification: 8 ADR/RID Item Number: 17°C
U.S. Custom Harmonization Number: 2809.20.00.30

SECTION 15 – REGULATORY INFORMATION

SARA Hazard Category: This product has been reviewed according to the EPA Hazard Categories promulgated under Section 311 and 312 of the Superfund Amendment and Reauthorization Act of 1986 (SARA Title III) and is considered, under applicable definitions, to meet the following categories:
Fire: No Pressure Generating: No Reactivity: No Acute: Yes Chronic: No

40 CFR Part 355 – Extremely Hazardous Substances: None
40 CFR Part 370 – Hazardous Chemical Reporting: Applicable

TSCA Inventory Status: Chemical components listed on TSCA Inventory

SARA Title III: This product contains the following substances to the reporting requirements of Title III (EPCRA) of the Superfund Amendments and Reauthorization Act of 1986 and 40 CFR Part 372:

Chemical	CAS No.	% by Wt.	CERCLA RQ (lbs)	SARA (1986) Reporting		
				311	312	313
Phosphoric Acid	7664-38-2	65 – 80	5,000	Yes	Yes	No

CERCLA/Superfund, 40 CFR Parts 117, 302: If this product contains components subject to substances designated as CERCLA Reportable Quantity (RQ) Substances, it will be designated in the above table with the RQ value in pounds. If there is a release of RQ Substance to the environment, notification to the National Response Center, Washington, D.C. (1-800-424-8802) is required.

SECTION 16 – OTHER INFORMATION

Disclaimer: The information contained herein is based on data considered accurate. However, no warranty is expressed or implied regarding the accuracy of this data or the results to be obtained from the user thereof. It is the buyer's responsibility to ensure that its activities comply with federal, state, provincial and local laws.

NuWell 310

JOHNSON SCREENS

A Weatherford Company

Material Safety Data Sheet

SECTION 1 - CHEMICAL PRODUCT AND COMPANY INFORMATION

Product Name: NW-310
Part Number: **Chemical Family:** Polymeric acid solution to enhance acid cleaning activity

Manufacturer's Name: Johnson Screens /A Weatherford Company
Address: P.O. Box 64118 – St. Paul, MN 55164
Product/Technical Information Phone Number: 651-636-3900
Medical/Handling Emergency Phone Number: CHEMTREC 1-800-424-9300
Transportation Emergency Phone Number: CHEMTREC 1-800-424-9300

Issue Date: 06-01-1997
Revision Date/Revision Number: 01/20/2012 / 06

SECTION 2 – COMPOSITION INFORMATION

****

No constituents of the formulae are listed or considered hazardous under OSHA 29CFR 1910.1200

All components are listed under TSCA

SECTION 3 - HAZARDS IDENTIFICATION

****

Appearance & Odor: Clear yellow liquid
Emergency Overview: Product is a mild acid – handle with caution
Fire & Explosion Hazards: Contact with metals may produce flammable hydrogen gas
Primary Route(s) of Exposure: Skin, eyes, and inhalation
Inhalation – Acute Effects: Irritation or corrosion of mucous membranes with upper and lower respiratory irritation
Skin Contact – Acute Effects: Skin discomfort or rash
Eye Contact – Acute Effects: Irritation, tearing, or blurring of vision
Ingestion – Acute Effects: Diarrhea

SECTION 4 - FIRST AID MEASURES

****

Inhalation First Aid: Remove affected person from area to fresh air and provide oxygen if breathing is difficult. Give artificial respiration ONLY if breathing has stopped and give CPR ONLY if there is no breathing and no pulse. Obtain medical attention.

Skin Contact First Aid: Immediately remove clothing from affected area and wash skin for 15 minutes with flowing water and soap. Clothing should be discarded or washed before reuse. Obtain medical assistance if irritation develops.

Eye Contact First Aid: Immediately irrigate eyes with flowing water continuously for 15 minutes while holding eyes open. Contacts should be removed before or during flushing. Obtain medical attention immediately.

Ingestion First Aid: If victim is alert and not convulsing, rinse mouth with water and give plenty of water to drink. If spontaneous vomiting occurs, have affected person lean forward with head down to avoid breathing in of vomitus. Rinse mouth again and give more water to drink. Obtain medical attention.

Medical Conditions Aggravated: None known

Note to Physician: Product has some surfactant qualities that may result in a laxative effect in cases of ingestion.

SECTION 5 - FIRE FIGHTING MEASURES

****

Flash Point/Method: None
Auto Ignition Temperature: N/D
Upper/Lower Explosion Limits: N/A
Extinguishing Media: That which is appropriate for surrounding fire

Fire Fighting Procedures: Wear self-contained breathing apparatus. Carbon monoxide, carbon dioxide, phosphorus oxides (extremely small) may be released in a fire.

Fire & Explosion Hazards: High heat fires could result in excessive carbon monoxide release.

Hazardous Products of Decomposition and/or Combustion: Carbon monoxide, carbon dioxide, and phosphorus oxides.

NFPA Ratings:

HEALTH	FLAMMABILITY	REACTIVITY	OTHER
1	0	1	None

SECTION 6 – ACCIDENTAL RELEASE MEASURES

****

Neutralize spills with lime or soda ash. Flush spill area with plenty of water. Keep spectators away. Treat as an acid material. Contain spill with inert material (e.g. sand, earth, absorbable material). Transfer diking material to suitable container for recovery or disposal. Material may be diluted and rinsed down a sanitary sewer system to a municipal wastewater plant. If quantities in excess of 500 gallons are rinsed to a sewer, the district should be notified of possible pH upset to the wastewater plant.

All disposal methods must be in compliance with all Federal, State, Local and Provincial laws and regulations. Regulations may vary in different locations. Waste characterizations and compliance with applicable laws are the responsibility solely of the waste generator.

SECTION 7 – HANDLING AND STORAGE

****

Handling: Minimize skin contact. Wash with soap and water before eating, drinking, smoking, or using toilet facilities.

Storage: Keep in well ventilated area. Keep package tightly closed. Store above 32° F. (0° C.) Product should not be stored with or near strong caustic or oxidizing agents.

General Comments: None

SECTION 8 – PERSONAL PROTECTION / EXPOSURE CONTROL

****

Respiratory Protection: None required for normal use

Skin Protection: Neoprene gloves or approved chemical protective gloves suitable for use in acid material

Eye Protection: Chemical splash goggles (ANSI Z871) or approved equivalent

Ventilation Protection: Standard plant ventilation should be sufficient

Other Protection: Safety showers, with quick opening valves which stay open, and eye wash fountains, or other means of washing the eyes with a gentle flow of cool to tepid tap water, should be readily available in all areas where this material is handled or stored. Water should be supplied through insulated and heat-traced lines to prevent freeze-ups in cold weather.

Exposure Limits:

OSHA	ACGIH	NIOSH	SUPPLIER
None	None	None	AEL=20mg/m^3 - 8&12 hrs TWA

SECTION 9 – PHYSICAL AND CHEMICAL PROPERTIES

****

Appearance & Odor: Clear yellow liquid

Vapor Pressure: Vapor is water
Vapor Density: 1.0 (vapor is water)
Boiling Point: 250° F.
Melting Point: N/A
Specific Gravity: 1.19
Solubilty in Water: Complete
Volatile Percentage: 34%
pH: 2.3
Flash Point/method: Will not flash
Auto Ignition Temperature: N/D
Upper/Lower Explosion Limits: N/A
Other:

SECTION 10 - STABILITY AND REACTIVITY

****

Stability: Stable
Incompatibilities: Metals, oxidizing agents such as nitric acid, cyanide, sulfides
Polymerization: No
Decomposition: Carbon monoxide, carbon dioxide, phosphorus oxides (extremely small)
Conditions to Avoid: Contact with strong oxidizing chemicals such as calcium hypochlorite

SECTION 11 - TOXICOLOGICAL INFORMATION

****

Inhalation – Acute: 4 hrs. LC_{50} (rats) – 14 mg/L
Inhalation – Chronic: Not established
Skin Contact – Acute: Dermal LD_{50} Rabbits > 3000 mg/kg
Skin Contact – Chronic: Skin irritation Rabbits (Draize Score 1.6 /8)
Eye Contact – Acute: Minimal Rabbits (Draize score 2.7 / 110)
Ingestion – Acute: Oral LD_{50} (Rats) > 5000 mg/kg
Ingestion – Chronic: 600 mg/kg (90 day study dogs) produced some kidney function changes *
Carcinogenicity/Mutagenicity: None
Reproductive Effects: None known
Neurotoxicity: None
Other Effects: Some calcium loss in long term feeding studies (Dogs) *
Target Organs: Kidneys, Bones

SECTION 12 – ECOLOGICAL INFORMATION

****

Biodegradability:

BOD (5) 1.0% solution	7950 mg O_2/L
BOD (5) 0.1% solution	725 mg O_2/L
Total Organic Carbon	2.2%
Non-bioaccumulating	

Fish toxicity: Bluegill (24 – 48 hrs) LC_{50} = 186 mg/L
Biological safe concentration is 56 mg/L
At 310 mg/L there was 90% mortality in 24 – 48 hrs
At 36 mg/L pH 5.4 there was 100% survival over 48 hrs

SECTION 13 – DISPOSAL CONSIDERATIONS

****

Comply with Federal, State, and local regulations. If approved, may be neutralized and flushed to wastewater treatment plant. Product is biodegradable, no discharge limitations are required.

Material that cannot be used or chemically reprocessed and empty containers should be disposed of in accordance with all applicable regulations. Product containers should be thoroughly emptied before disposal. Generators of waste material are required to evaluate all waste for compliance with RCRA and any local disposal procedures and regulations. NOTE: State and local regulations may be more stringent than federal regulations.

SECTION 14 – TRANSPORTATION INFORMATION

DOT Shipping Description: Not regulated as a hazardous material by the US Dept. of Transportation (DOT) 49CFR 172.101 Hazardous Materials Table

U.S. Custom Harmonization #: 3402.90

Canadian TDG:
Hazard Class: Non-Hazardous
Label Requirements: None Required
Reportable Quantity: None

SECTION 15 – REGULATORY INFORMATION

NSF Certified for use in well cleaning, pipe line cleaning, and filter cleaning

RCRA Status: Not a hazardous waste under RCRA 40 CFR 261. No reportable quantities.

SARA/TITLE III-CERCLA List: This product does not contain a “CERCLA” listed hazardous substance for emergency release notification under Sec. 304 (40CFR 302).

SARA/TITLE III-Toxic Chemicals List: This product does no contain a toxic chemical for routine annual “Toxic Chemical Release Reporting” under Sec. 313 (40CFR 372).

TSCA Inventory Status: Chemical components listed on TSCA Inventory.

California Proposition 65: This product does not contain any chemicals currently on the California list of known carcinogens and reproductive toxins.

Canadian WHMIS Classification: This product does not contain any hazardous materials under CPR and this MSDS discloses all information elements required by the CPR.

SECTION 16 – OTHER INFORMATION

Disclaimer: The information contained herein is based on data considered accurate. However, no warranty is expressed or implied regarding the accuracy of this data or the results to be obtained from the user thereof. It is the buyer's responsibility to ensure that its activities comply with federal, state, provincial and local laws.

Created by: Ida Goldstein