GENERAL NOTES

1. LOCATION OF UTILITIES HAVE BEEN DETERMINED FROM BEST AVAILABLE INFORMATION. HOWEVER, ACCURACY OR COMPLETENESS OF THE UTILITIES SHOWN IS NOT GUARANTEED. FIELD VERIFY THE LOCATION OF UTILITIES PRIOR TO CONSTRUCTION (SEE SPECIFICATIONS). UTILITIES SHOWN ON THE DRAWINGS ARE UNDERGROUND UNLESS OTHERWISE NOTED. THE CONTRACTOR SHALL CONTACT THE FOLLOWING RESPECTIVE PARTIES FOR LOCATION OF UNDERGROUND UTILITIES AT LEAST 48 HOURS IN ADVANCE OF INTRUSIVE FIELD WORK :
   A. UNDERGROUND SERVICE ALERT (USA) (800) 643-2444
   B. PACIFIC GAS AND ELECTRIC (PG&E) (800) 743-5000

2. ANY DAMAGE TO EXISTING PIPELINES AND OTHER IMPROVEMENTS NOT SCHEDULED FOR REPLACEMENT AS PART OF THIS WORK, DUE TO CONSTRUCTION ACTIVITIES, SHALL BE REPAIRED BY THE CONTRACTOR AT NO ADDITIONAL COST TO THE OWNER.

3. NO EXCAVATED MATERIAL SHALL BE STORED ON SITE, EXCEPT AS APPROVED BY OWNER.

4. DISPOSE OF UNUSABLE EXCAVATED MATERIAL AT NO ADDITIONAL COST TO THE OWNER.

5. THE CONTRACTOR IS ADVISED TO POT-HOLE IN ADVANCE OF WORK PROGRESS TO VERIFY EXISTENCE AND LOCATION OF UTILITIES AND UTILITY CROSSINGS. PERFORM POT-HOLING UNDER THE PRESENCE AND SUPERVISION OF THE OWNER'S REPRESENTATIVE AND RESPECTIVE UTILITY REPRESENTATIVES. HAND DIGGING IS REQUIRED IN AREAS WHERE BURIED HAZARDOUS FACILITIES ARE LOCATED. SEE SECTION XXXXXX FOR IDENTIFICATION OF CRITICAL LOCATIONS FOR WHICH MANDATORY POTHOLING IS REQUIRED.

6. WHERE TEMPORARY OR PERMANENT RELOCATION OF EXISTING UNDERGROUND OR OVERHEAD UTILITIES IS REQUIRED, TAKE NECESSARY STEPS TO ENSURE THAT CONTINUOUS SERVICE IS MAINTAINED IN A MANNER APPROVED BY THE AFFECTED UTILITY AND IN ACCORDANCE WITH APPLICABLE COUNTY AND STATE PUBLIC HEALTH REGULATIONS. BEAR ALL COSTS ASSOCIATED WITH RELOCATION AND MAINTENANCE OF SERVICE, EXCEPT AS OTHERWISE NOTED ON THE DRAWINGS OR SPECIFICATIONS.

7. THE OWNER HAS ACQUIRED TEMPORARY CONSTRUCTION EASEMENTS AND STORAGE AREAS AS SHOWN ON THE DRAWINGS. SEE SPECIAL PROJECT PROCEDURES, SECTION XXXXXX OF THE SPECIFICATIONS, FOR ANY REQUIREMENTS PERTAINING TO THESE EASEMENT RIGHTS. IF ADDITIONAL TEMPORARY EASEMENTS FOR STORAGE OR CONSTRUCTION OPERATIONS ARE REQUIRED OR DESIRED, ASSUME FULL RESPONSIBILITY TO OBTAIN SUCH AT NO EXPENSE TO THE OWNER. FILE A COPY OF EACH WRITTEN AGREEMENT BETWEEN THE CONTRACTOR AND THE PROPERTY OWNER FOR EASEMENTS THUS ACQUIRED WITH THE PROJECT OWNER PRIOR TO ENTRY INTO OR USE OF THE RESPECTIVE AREAS.

8. PLACE EROSION AND SILTATION CONTROL MEASURES PRIOR TO OR AS FIRST STEP IN GRADING.

9. DURING CONSTRUCTION, PROTECT EXISTING STORM SEWER AND DRAIN INLETS AND NEWLY CONSTRUCTED MANHOLES AND UNDERGROUND VAULTS BY SILT TRAPS. MAINTAIN AND MODIFY PROTECTIVE MEASURES AS CONSTRUCTION PROGRESSES.

10. RESTORE EXISTING NATURAL DRAINAGE DITCHES AND STREAM BANKS DISTURBED DURING CONSTRUCTION TO ORIGINAL ALIGNMENT, GRADE AND INVERT, EXCEPT WHERE OTHERWISE INDICATED. EMPLOY EROSION CONTROL MEASURES AS SPECIFIED.

11. PROVIDE 3 FEET MINIMUM COVER OVER TOP OF PIPE UNLESS OTHERWISE SPECIFICALLY SHOWN ON THE PIPELINE DRAWINGS.

12. RESTRAINED (WELDED OR MECHANICALLY JOINED) PIPE JOINTS ARE USED FOR RESISTANCE TO THRUST AT PIPE BENDS AND FOR PROTECTION OF PARALLEL WATER MAINS. MINIMUM LIMITS OF RESTRAINED JOINTS ARE SHOWN ON THE DRAWINGS. SHOULD A CHANGE IN ALIGNMENT OCCUR THAT RESULTS IN CHANGED OR ADDED PIPE BENDS OR RW/TW PIPELINE TO BE CLOSER THAN 5 FEET TO A PARALLEL WATER MAIN, PROVIDE ADDITIONAL WELDED PIPE JOINTS AS REQUIRED AND DIRECTED BY OWNER.

13. WHERE PIPELINE CROSSES WATER MAINS, AVOID IF POSSIBLE INSTALLING PIPE JOINT WITHIN 10 FOOT DISTANCE OF EACH SIDE OF CROSSING WATER MAIN. IF A JOINT IN THIS ZONE IS UNAVOIDABLE, INSTALL WELDED JOINT ONLY. REPLACE ALL SEVERED OR DAMAGED MAINS CROSSING CONSTRUCTION TRENCHES UNDER INSPECTION OF THE ENTITY HAVING JURISDICTION. PERFORM EXCAVATION, PIPE INSTALLATION, BACKFILL COMPACTION AND RESTORATION WORK NECESSARY FOR REPLACEMENT AT NO ADDITIONAL EXPENSE TO THE OWNER. REFERENCE SPECIFICATION SECTION 01050 AND 01100.

14. VERTICAL CONTROL: PIPE CENTERLINE IS INDICATED ON THE DRAWINGS. IT IS THE INTENT OF THESE DRAWINGS THAT PIPE CENTERLINE ELEVATIONS SHOWN AT VERTICAL ANGLE POINTS EXCEPT WHERE A FITTING IS SPECIFICALLY INDICATED, ARE FOR THE PURPOSE OF ESTABLISHING A P.I. FOR VERTICAL CURVES USING JOINT DEFLECTION. WHERE THE VERTICAL P.I. SHOWN WOULD CREATE A CONFLICT WITH THE STATED MINIMUM COVER, THE MINIMUM COVER HAS PRECEDENCE. PIPE SLOPES SHOWN ARE FOR INFORMATION ONLY, INVERT ELEVATIONS NOTE CONTROL.

15. UNLESS OTHERWISE NOTED, ELEVATIONS SHOWN ON THESE DRAWINGS ARE BASED ON NAVD88, DATA SHEETS EU1248 AND EU0763 IN US SURVEY FEET.

16. HORIZONTAL CONTROL. THE BEARINGS AND DISTANCES SHOWN ARE BASED UPON 1983 STATE PLANE GROUND COORDINATES, ZONE 5 (NAV1983, STATE PLANE, CALIFORNIA V, FIPS, 0405) STANDARD TRANSVERSE MERCATOR PROJECTION. GRID ADJUSTMTNT FACTOR OF 1.000123 FOR X=0.0000 AND Y= 0.0000

17. HORIZONTAL CONTROL POINTS ARE INDICATED ON THE DRAWINGS FOR THE PURPOSE OF DEFINING A SPECIFIC, REQUIRED ALIGNMENT. WHERE PERMITTED ON A CASE-BY-CASE BASIS, THE HORIZONTAL CONTROL POINTS MAY BE USED AS A P.I. FOR HORIZONTAL CURVES PROVIDED THE RESULTING PIPELINE ALIGNMENT DOES NOT COME CLOSER THAN 5 FEET FROM ANY PARALLEL WATER MAIN. CONSTRUCT HORIZONTAL CURVES BY DEFLECTING PIPE JOINTS PRIOR TO WELDING. DO NOT EXCEED MAXIMUM ALLOWABLE JOINT DEFLECTION SHOWN IN SPECIFICATIONS.

18. REPLACE ALL ROAD SURFACE, BERMS AND FENCING DAMAGED DURING CONSTRUCTION, AS PER SPECIFICATIONS AND DRAWINGS.

19. LOCATE COMBINATION AIR RELEASE AND VACUUM VALVE ASSEMBLIES AND AIR RELEASE ASSEMBLIES AT HIGH POINTS IN PIPING AS SHOWN ON THE DRAWINGS. INSTALL PIPE TO SLOPE CONTINUOUSLY AWAY (DOWN) FROM THE STATION MARK FOR THE VALVE INSTALLATION FROM BOTH SIDES. LOCATE BLOW-OFF ASSEMBLIES, WHERE SHOWN ON THE DRAWINGS, AT LOW POINTS IN THE PIPING. INSTALL PIPE TO SLOPE CONTINUOUSLY TOWARD THE VALVE INSTALLATION FROM BOTH SIDES. OBTAIN OWNER VERIFICATION IN FIELD LOCATING OF ALL VALVE ASSEMBLIES BEFORE INSTALLING.

20. STORAGE OF PIPE OR OTHER MATERIALS ON PUBLIC RIGHTS-OF-WAY OR PRIVATE PROPERTY DURING NON-WORKING HOURS WILL NOT BE PERMITTED EXCEPT WHERE AND WHEN SPECIFICALLY APPROVED BY THE OWNER.

21. EXISTING CONCRETE THRUST BLOCKS AND ANCHORS AT VALVES AND FITTINGS ON EXISTING UTILITIES ARE NOT SHOWN. REMOVE OR WORK AROUND, AS DETERMINED BY THE OWNER OR RESPECTIVE UTILITY, THRUST BLOCKS AND ANCHORS WHICH INTERFERE WITH THE WORK. INCLUDE ALL COSTS FOR SUCH WORK IN PROPOSAL.

22. REFER TO SPECIFICATION SECTION XXXXX AND DRAWINGS FOR SPECIFIC PAVING REQUIREMENTS. IN CONJUNCTION WITH THE FINAL PAVING OPERATIONS:

    RESTORE SURVEY MONUMENTS DAMAGED AS A CONSEQUENCE OF CONSTRUCTION OPERATIONS.

    RAISE TO FINISHED GRADE ALL METAL WORK (MANHOLE FRAME AND COVERS, VALVE BOXES, ETC.) EXISTING AND NEW, LOCATED IN AREAS PAVED AS PART OF THIS CONTRACT.

    COMPLY WITH ALL THE GENERAL REQUIREMENTS AND REQUIREMENTS OF SECTION XXXXXX, GENERAL PROVISIONS, REGARDING PROTECTION OF EXISTING IMPROVEMENTS.

23. MAINTAIN REQUIRED TRAFFIC CONTROL, INCLUDING SIGNAGE AND FLAGMEN, AT POINTS OF EGRESS FROM CONSTRUCTION SITE TO PUBLIC ROADS. COMPLY WITH SPECIFIED HAUL ROUTES. SEE SPECIFICATION SECTION 015000.

DRAFT
NOT FOR
CONSTRUCTION

E2 Consulting Engineers, Inc.
1900 Powell Street, Ste. 250
Emeryville, CA 94608
(510) 652-1164

CH2MHILL®

NO.	DATE	DESCRIPTION	GM/SPEC	DWN	CHKD	SUPV	APVD BY

REVISIONS

NO.	DATE	DESCRIPTION	GM/SPEC	DWN	CHKD	SUPV	APVD BY

REVISIONS

APPROVED BY

SO
SUPV
DSGN PT
DWN PC
CHKD PT
OK PT
DATE 4/5/13
SCALES NTS

TOPOCK GROUNDWATER REMEDIATION PROJECT

GENERAL NOTES

GAS TRANSMISSION & DISTRIBUTION
PACIFIC GAS AND ELECTRIC COMPANY
SAN FRANCISCO, CALIFORNIA

MICROFILM
BILL OF MATL
DWG LIST
SUPSDS
SUPSD BY
SHEET NO. of SHEETS
C-00-01
REV

PLOT DATE: $PLOTDATE PLOT TIME: $PLOTTIME
FILENAME: e2-c-xxx-0001ad.dwg

N1808

NATIONAL TRAIL HWY
IRZ-1
RB-1
IRZ-5
IRZ-9
IRZ-11
RB-2
IRZ-13
IRZ-15
RB-3
IRZ-16
IRZ-17
RB-4
IRZ-19
IRZ-20
IRZ-21
IRZ-23
IRZ-25
RB-5
IRZ-27
IRZ-29
IRZ-31
IRZ-33
IRZ-35
IRZ-37
IRZ-39
IRL-1
IRL-2
IRL-3
IRL-4
FW-1
FW-2
BAT CAVE WASH
COLORADO RIVER
BNSF RAIL ROAD
HNWR-1
TOPOCK 3
TOPOCK 2
MOHAVE COUNTY HWY 10
TCS-1
TCS-2
TWB-3
TWB-1
TWB-2
TWB-4
PG&E COMPRESSOR STATION
ER-1
ER-2
ER-3
ER-4
ER-6
ARCH BRIDGE
COLORADO RIVER

LEGEND

IRL-1 NEW WELL

MW-69 EXISTING WELL

IRL-1 FUTURE PROVISIONAL WELL

NOTE:

REFER TO DRAWING C-00-03 FOR SCHEDULE OF COORDINATE LOCATIONS.

N

WELL LOCATION MAP

1" = 250'

0 250 500

SCALE: 1"=250'

DRAFT NOT FOR CONSTRUCTION

E2 Consulting Engineers, Inc.
1900 Powell Street, Ste. 250
Emeryville, CA 94608
(510) 652-1164

CH2MHILL®

NO.	DATE	DESCRIPTION	GM/SPEC	DWN	CHKD	SUPV	APVD BY

REVISIONS

NO.	DATE	DESCRIPTION	GM/SPEC	DWN	CHKD	SUPV	APVD BY

REVISIONS

APPROVED BY

SO	
SUPV	
DSGN	PT
DWN	PC
CHKD	PT
OK	
DATE	
SCALES	

TOPOCK GROUNDWATER REMEDIATION PROJECT

WELL LOCATION MAP

GAS TRANSMISSION & DISTRIBUTION
PACIFIC GAS AND ELECTRIC COMPANY
SAN FRANCISCO, CALIFORNIA

MICROFILM	
BILL OF MATL	
DWG LIST	
SUPSDS	
SUPSD BY	
SHEET NO. of SHEETS	
C-00-02	REV

FILENAME: E2-C-XXX-0002
PLOT DATE: $PLOTDATE PLOT TIME: $PLOTTIME

Inner Recirculation Loop

Well Location ID	Figure Coordinates X	Figure Coordinates Y	Intermediate Injection/Extraction Rates (gpm) Nominal	Minimum	Maximum	Intermediate New Well Count	Intermediate Future Provisional Well Count
River Bank Extraction Wells							
RB-1	7615764	2103918	25	25	170	1	0
RB-2	7616012	2103398	0	25	170	1	0
RB-3	7616211	2103173	50	25	170	1	0
RB-4	7616338	2102909	50	25	170	1	0
RB-5	7616398	2102424	25	25	170	1	0
Inner Recirculation Loop							
IRL-1	7614358	2103365	75	35	200	1	0
IRIL-2	7614133	2103058	75	35	200	1	0
IRL-3	7613976	2102799	100	35	200	1	0
IRL-4	7613954	2102381	200	35	200	1	0
IRL-5	*7613919*	*2102638*	*0*	*35*	*200*	*0*	*1*
IRL-6	*7615134*	*2101497*	*0*	*35*	*200*	*0*	*1*
IRL-7	*7615236*	*2102324*	*0*	*35*	*200*	*0*	*1*
					Total New Well Count	**9**	**3**

Freshwater Supply/Injection Wells

Well Location ID	Figure Coordinates X	Figure Coordinates Y	Intermediate Injection/Extraction Rates (gpm) Nominal	Minimum	Maximum	Intermediate New Well Count	Intermediate Future Provisional Well
Freshwater Injection Wells							
FW-1	7613249	2102882	100	50	200	1	0
FW-2	7614683	2100512	50	25	100	1	0
Freshwater Supply Wells [1]							
HNWR-1 (existing well)	7619644	2104162		700		0	0
Topock 2 (existing well)	7620320	2103777		200		0	0
Topock 3 (existing well)	7620359	2103743		200		0	0
					Total New Well Count	**2**	**0**

TCS Recirculation Loop

Well Location ID	Figure Coordinates X	Figure Coordinates Y	Intermediate Injection/Extraction Rates (gpm) Nominal	Minimum	Maximum	Intermediate New Well Count	Intermediate Future Provisional Well
Transwestern Bench Extraction Wells							
TWB-1	7615955	2100973	13	1	15	1	0
TWB-2	7616024	2100966	9	1	15	1	0
TWB-3	*7615777*	*2101143*	*0*	*1*	*15*	*0*	*1*
TWB-4	*7616088*	*2100859*	*0*	*1*	*15*	*0*	*1*
East Ravine Extraction Wells							
ER-1	7616511	2101089	0.5			1	0
ER-2	7616666	2100999	0.5			1	0
ER-3	7616855	2100898	0.5	2 total	4 total	1	0
ER-4	7616935	2100761	0.5			1	0
ER-5	*7616995*	*2100678*	*0*	*1*	*1*	*0*	*1*
ER-6	7615840	2100512	3	1	5	1	0
TCS Injection Wells							
TCS-1	7615168	2101171	13.5	4	40	1	0
TCS-2	7615149	2100900	13.5	4	40	1	0
					Total New Well Count	**9**	**3**

[1] See Exhibit 3-1 of BOD Report. PG&E is currently in discussions with the well owner about conducting hydraulic testing at the existing Topock-2 and -3 wells to provide a better estimate of the current production capacity of these wells. A pump test at the existing HNWR-1 well is being planned to confirm the production capacity of the well.

National Trails Highway In-Situ Reactive Zone

Well Location ID	Figure Coordinates X	Figure Coordinates Y	Intermediate Injection/Extraction Rates (gpm) Nominal	Minimum	Maximum	Intermediate New Well Count
NTH IRZ Wells						
IRZ-1 (Extraction)	7615297	2104064	40	40	160	1
IRZ-2	*7615285*	*2104004*	*0*	*0*	*24*	*0*
IRZ-3	*7615416*	*2103957*	*0*	*0*	*24*	*0*
IRZ-4	*7615367*	*2103837*	*0*	*0*	*24*	*0*
IRZ-5 (Extraction)	7615445	2103826	80	40	160	1
IRZ-6	*7615416*	*2103730*	*0*	*0*	*24*	*0*
IRZ-7	*7615515*	*2103692*	*0*	*0*	*24*	*0*
IRZ-8	*7615474*	*2103600*	*0*	*0*	*24*	*0*
IRZ-9 (Extraction)	7615566	2103561	80	40	160	1
IRZ-10	*7615543*	*2103457*	*0*	*0*	*24*	*0*
IRZ-11	7615636	2103409	40	0	80	2
IRZ-12	*7615617*	*2103307*	*0*	*0*	*24*	*0*
IRZ-13	7615702	2103307	36	0	80	2
IRZ-14	*7615661*	*2103190*	*0*	*0*	*24*	*0*
IRZ-15	7615766	2103146	28	0	60	2
IRZ-16	7615794	2103038	24	0	60	2
IRZ-17	7615861	2102994	28	0	60	2
IRZ-18	*7615834*	*2102912*	*0*	*0*	*24*	*0*
IRZ-19	7615930	2102847	28	0	52	2
IRZ-20	7615808	2102769	16	0	52	2
IRZ-21	7615816	2102692	20	0	40	2
IRZ-22	*7615784*	*2102612*	*0*	*0*	*24*	*0*
IRZ-23 (Extraction)	7615825	2102535	100	40	160	1
IRZ-24	*7615784*	*2102461*	*0*	*0*	*26*	*0*
IRZ-25	7615826	2102416	16	0	36	1
IRZ-26	*7615819*	*2102314*	*0*	*0*	*26*	*0*
IRZ-27	7615801	2102239	16	0	36	1
IRZ-28	*7615798*	*2102180*	*0*	*0*	*26*	*0*
IRZ-29	7615792	2102083	14	0	30	1
IRZ-30	*7615781*	*2102011*	*0*	*0*	*26*	*0*
IRZ-31	7615791	2101947	12	0	26	1
IRZ-32	*7615813*	*2101863*	*0*	*0*	*26*	*0*
IRZ-33	7615828	2101793	8	0	26	1
IRZ-34	*7615854*	*2101667*	*0*	*0*	*26*	*0*
IRZ-35	7615904	2101665	6	0	15	1
IRZ-36	*7615949*	*2101606*	*0*	*0*	*25*	*0*
IRZ-37	7616004	2101555	4	0	10	1
IRZ-38	*7615965*	*2101400*	*0*	*0*	*25*	*0*
IRZ-39	7616112	2101376	4	0	5	1
IRZ-40 (Extraction)	*7616192*	*2101358*	*0*	*0*	*25*	*0*
Extraction Total			**300**	**200**	**400**	**4**
Injection Total			**300**	**200**	**400**	**24**
					Total New Well Count	**28**

Total Intermediate New Well Count for the Groundwater Remedy (excludes new monitoring wells)
Total Intermediate Future Provisional Well Count (excludes monitoring wells)

DRAFT
NOT FOR
CONSTRUCTION

E2 Consulting Engineers, Inc.
1900 Powell Street, Ste. 250
Emeryville, CA 94608
(510) 652-1164

CH2MHILL®

NO.	DATE	DESCRIPTION	GM/SPEC	DWN	CHKD	SUPV	APVD BY
		REVISIONS					

NO.	DATE	DESCRIPTION	GM/SPEC	DWN	CHKD	SUPV	APVD BY
		REVISIONS					

APPROVED BY
SO
SUPV
DSGN PT
DWN PC
CHKD PT
OK PT
DATE 4/5/13
SCALES NTS

TOPOCK GROUNDWATER REMEDIATION PROJECT

WELL SCHEDULE

GAS TRANSMISSION & DISTRIBUTION
PACIFIC GAS AND ELECTRIC COMPANY
SAN FRANCISCO, CALIFORNIA

MICROFILM
BILL OF MATL
DWG LIST
SUPSDS
SUPSD BY
SHEET NO. of SHEETS
C-00-03
REV

PLOT DATE: $PLOTDATE PLOT TIME: $PLOTTIME
FILENAME: e2-c-xxx-0003ad.dwg

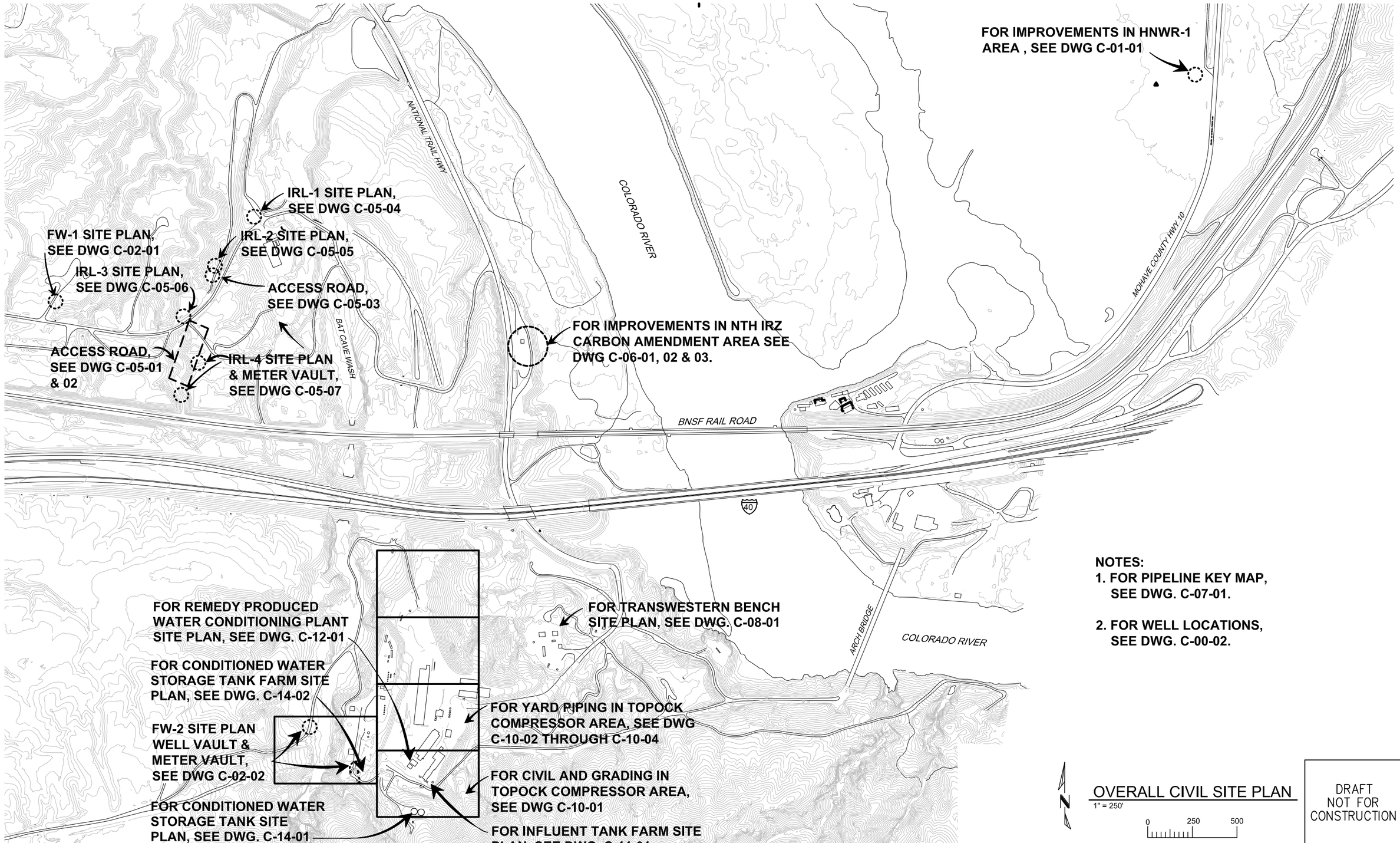

NOTES:

1. FOR PIPELINE KEY MAP, SEE DWG. C-07-01.
2. FOR WELL LOCATIONS, SEE DWG. C-00-02.

OVERALL CIVIL SITE PLAN

1" = 250'

0 250 500

SCALE: 1"=250'

DRAFT NOT FOR CONSTRUCTION

E2 Consulting Engineers, Inc.
1900 Powell Street, Ste. 250
Emeryville, CA 94608
(510) 652-1164

CH2MHILL®

NO.	DATE	DESCRIPTION	GM/SPEC	DWN	CHKD	SUPV	APVD BY

REVISIONS

NO.	DATE	DESCRIPTION	GM/SPEC	DWN	CHKD	SUPV	APVD BY

REVISIONS

APPROVED BY

SO
SUPV
DSGN PT
DWN PC
CHKD PT
OK PT
DATE 4/5/13
SCALES

TOPOCK GROUNDWATER REMEDIATION PROJECT

OVERALL CIVIL SITE PLAN

GAS TRANSMISSION & DISTRIBUTION
PACIFIC GAS AND ELECTRIC COMPANY
SAN FRANCISCO, CALIFORNIA

MICROFILM
BILL OF MATL
DWG LIST
SUPSDS
SUPSD BY
SHEET NO. of SHEETS
C-00-04
REV

FILENAME: E2-C-XXX-0004
PLOT DATE: $PLOTDATE PLOT TIME: $PLOTTIME

N1808

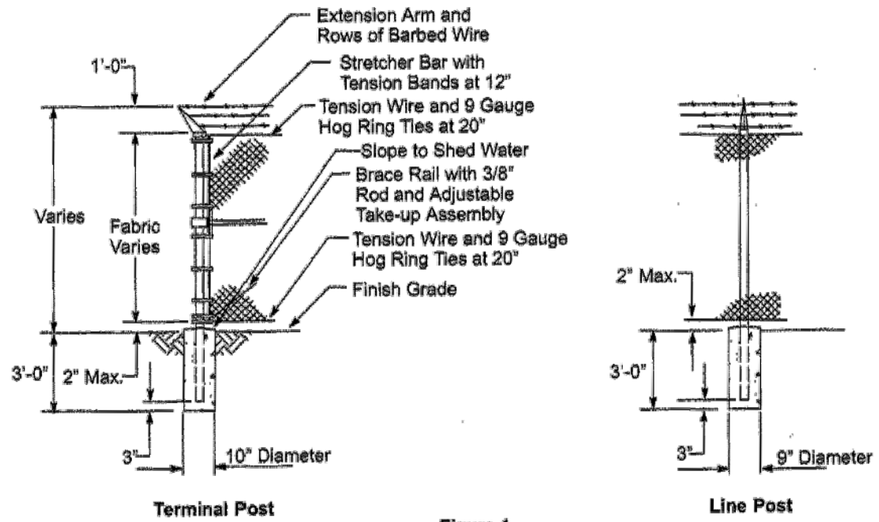

Figure 1
Chain-link Fabric Fence

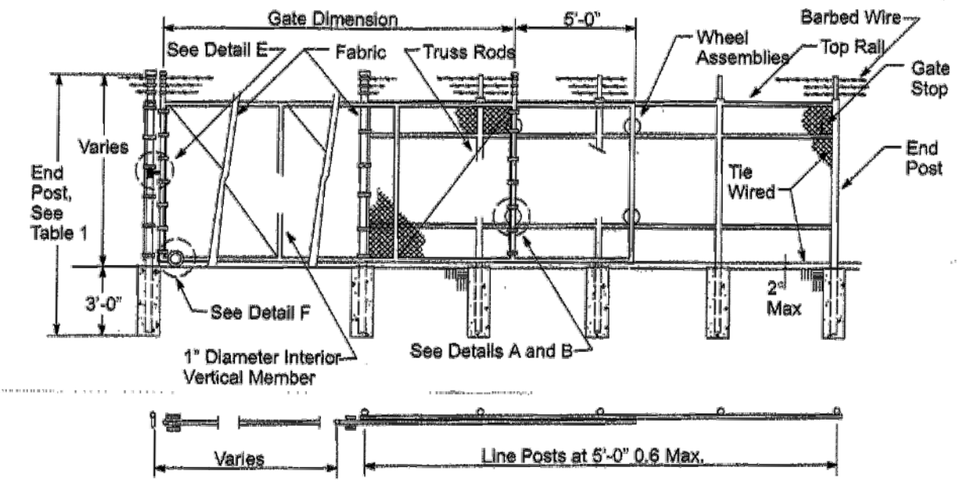

Figure 2
Sliding Gate (Plan) and Elevation

NOTE: THE FENCE AND GATES SHALL COMPLY WITH PG&E STANDARD L-50

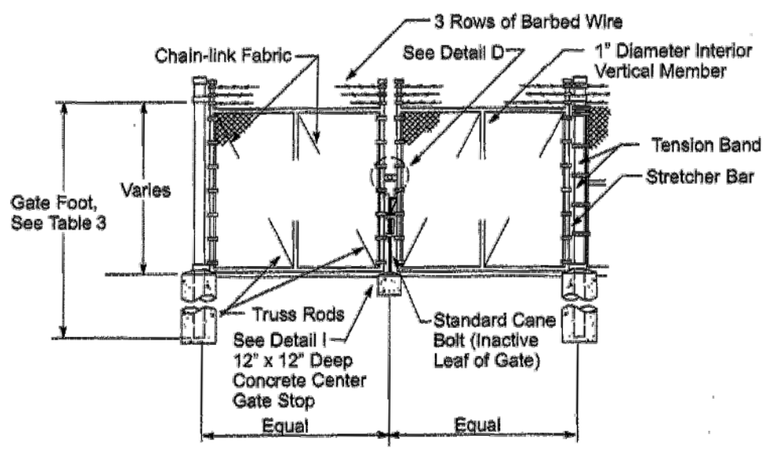

Figure 3
Standard Swing Gate (Elevation)

Table 1 Fence Posts and Braces

Galvanized Chain-link Fabric; Aluminum-coated Chain-link Fabric; and Plastic-coated, Galvanized Chain-link Fabric				
Fabric Height	Fence Framing	Posts		Braces
		Line	Terminal	
6' - 0" 7' - 0" and 8' - 0"	Standard Weight Pipe	2-3/8" O.D. 3.65 Lbs./Ft.	2-7/8" O.D. 5.79Lbs-/Ft.	1-5/8" O.D. 2.27 Lbs./Ft.
	Roll Form Section	1-7/8" x 1-5/8" 2.28 Lbs./Ft.	3-1/2" Square 4.85 Lbs./Ft.	1-5/8" x 1-1/4" 1.35 Lbs./Ft.
	Aluminum Shapes	2-1/2" O.D. Schedule 40	2-1/2" Square 2.98 Lbs./Ft.	2" O.D. Schedule 40

Table 2 Fence Posts and Rails

Galvanized Chain-link Fabric; Aluminum-coated Chain-link Fabric; and Plastic-coated, Galvanized Chain-link Fabric				
Fabric Height	Fence Framing	Posts		Rails and Braces
		Line	Terminal	
6' - 0" 7' - 0" and 8' - 0"	Standard Weight Pipe	2-7/8" O.D. 5.79 Lbs./Ft.	2-7/8" O.D. 5.79 Lbs./Ft.	1-5/8" O.D. 2.27 Lbs./Ft.
6' - 0" 7' - 0" and 8' - 0"	Roll Form Section	2-1/4" x 1-5/8" 2.64 Lbs./Ft.	3-1/2" x 3-1/2" 4.85 Lbs./Ft.	1-5/8" x 1-1/4" 1.35 Lbs./Ft.
	Aluminum Shapes	2-1/2" Square 2.9 Lbs./Ft.	2-1/2" Square 2.9 Lbs./Ft.	2" O.D. Schedule 40

Table 3 8'-0" High Gate-Minimum Gate Posts and Gate Footings

Table of Gate Face Material	Gate Leaf	Post Size (Outside Diameter)	Footing	
			Diameter of Footings	Depth of Footings
Chain-link Fabric	Up To and Including 6'-0" Wide	3"	12"	48"
	Over 6'-0" and Up To and Including 13'-0" Wide	4"	14"	48"
Chain-link Fabric with Redwood Pickets	Up To and Including 6'-0" Wide	4"	12"	48"
	Over 6'-0" and Up To and Including 13'-0" Wide	6-5/8"	18"	48"

DRAFT
NOT FOR
CONSTRUCTION

E2 Consulting Engineers, Inc.
1900 Powell Street, Ste. 250
Emeryville, CA 94608
(510) 652-1164

CH2MHILL®

NO.	DATE	DESCRIPTION	GM/SPEC	DWN	CHKD	SUPV	APVD BY
		REVISIONS					

NO.	DATE	DESCRIPTION	GM/SPEC	DWN	CHKD	SUPV	APVD BY
		REVISIONS					

APPROVED BY
SO
SUPV
DSGN PT
DWN PC
CHKD PT
OK PT
DATE 4/5/13
SCALES AS SHOWN

TOPOCK GROUNDWATER PROJECT

CHAIN LINK FENCE AND GATE

GAS TRANSMISSION & DISTRIBUTION
PACIFIC GAS AND ELECTRIC COMPANY
SAN FRANCISCO, CALIFORNIA

MICROFILM
BILL OF MATL
DWG LIST
SUPSDS
SUPSD BY
SHEET NO. of SHEETS
C-00-06
REV

FILENAME: a2-c-xxx-0006ad.dwg
PLOT DATE: $PLOTDATE PLOT TIME: $PLOTTIME

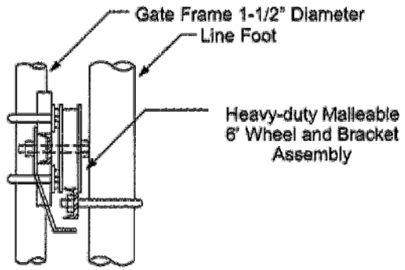

Detail A
Rear Wheels for Channel Track,
Scale: 3" = 1'-0"

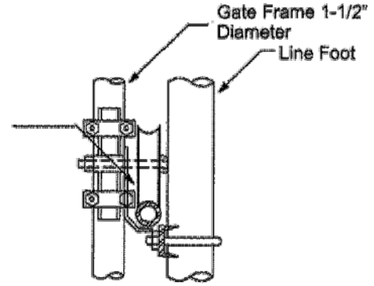

Detail B
Rear Wheels for Pipe Track,
Scale: 3" = 1'-0"

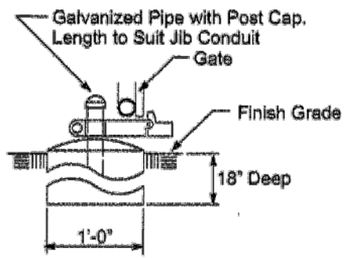

Detail C
Gate Keeper,
Scale: 1-1/2" = 1'-0"

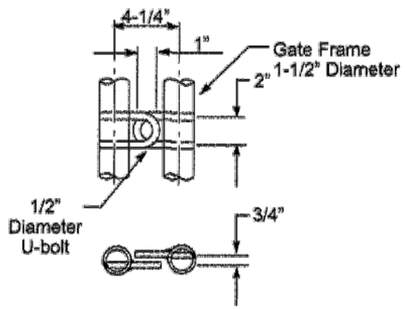

Detail D
Padlock for Standard Swinging Gate

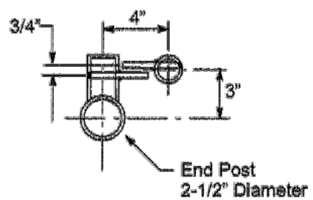

Detail E
Padlock for Rolling Gate,
Scale: 3" = 1'-0"

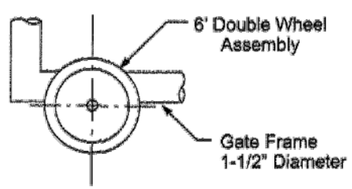

Detail F
Front Wheels for Rolling Gate,
Scale: 3" = 1'-0"

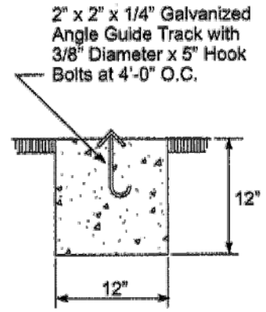

Note: Angle Track to be 1'-0" Longer than Gate Opening.

Detail G
Rolling Gate Guide Track

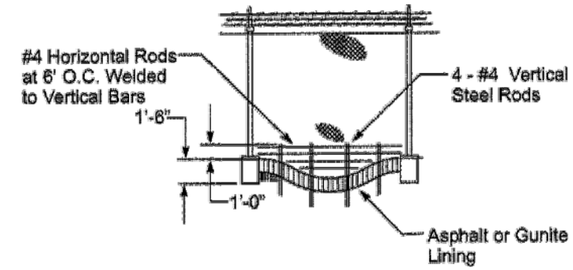

Detail H
Drainage Trench Detail

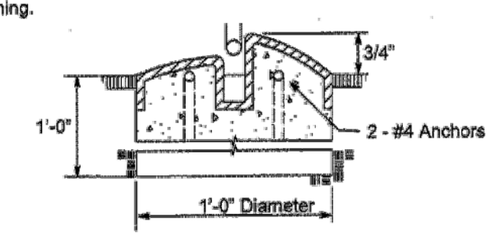

Note: Stop to be Supplied by PG&E and Installed by Contractor.

Detail I
Center Gate Stop Detail For Ornamental Swing Gate or Rustic Gate. For Chain Fabric Gate, Use Masters No. 15911 Stock.
NOTE: THE FENCE AND GATES SHALL COMPLY WITH PG&E STANDARD L-50.

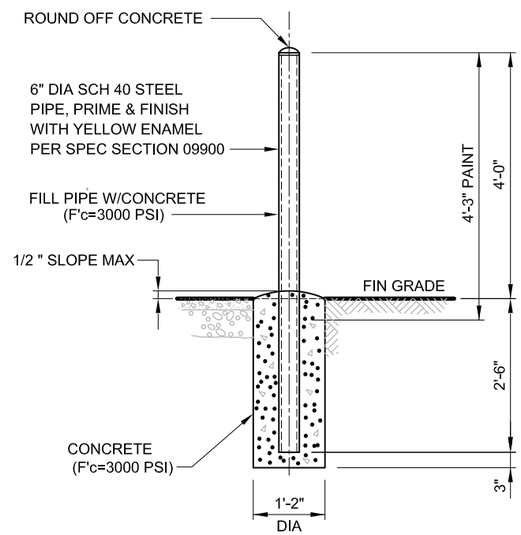

2 FIXED BUMPER POST DETAIL
NTS

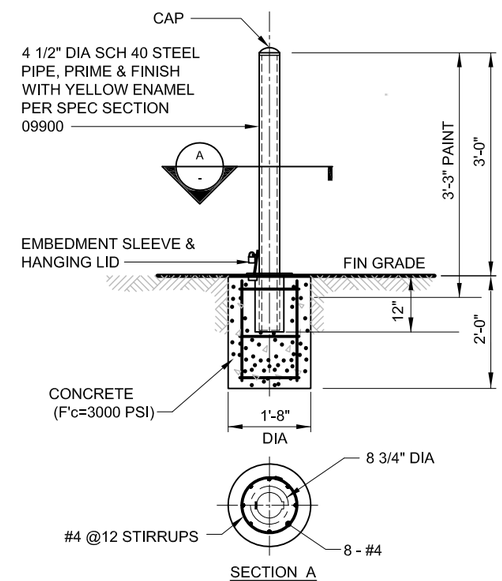

3 REMOVABLE BUMPER POST DETAIL
NTS

DRAFT
NOT FOR
CONSTRUCTION

E2 Consulting Engineers, Inc.
1900 Powell Street, Ste. 250
Emeryville, CA 94608
(510) 652-1164

CH2MHILL®

NO.	DATE	DESCRIPTION	GM/SPEC	DWN	CHKD	SUPV	APVD BY

REVISIONS

NO.	DATE	DESCRIPTION	GM/SPEC	DWN	CHKD	SUPV	APVD BY

REVISIONS

APPROVED BY
SO
SUPV
DSGN PT
DWN PC
CHKD PT
OK PT
DATE 4/5/13
SCALES NTS

TOPOCK GROUNDWATER PROJECT

CHAIN LINK FENCE AND GATE DETAILS
GAS TRANSMISSION & DISTRIBUTION
PACIFIC GAS AND ELECTRIC COMPANY
SAN FRANCISCO, CALIFORNIA

MICROFILM
BILL OF MATL
DWG LIST
SUPSDS
SUPSD BY
SHEET NO. of SHEETS
C-00-07
REV

FILENAME: e2-c-xxx-0007ad.dwg
PLOT DATE: $PLOTDATE PLOT TIME: $PLOTTIME

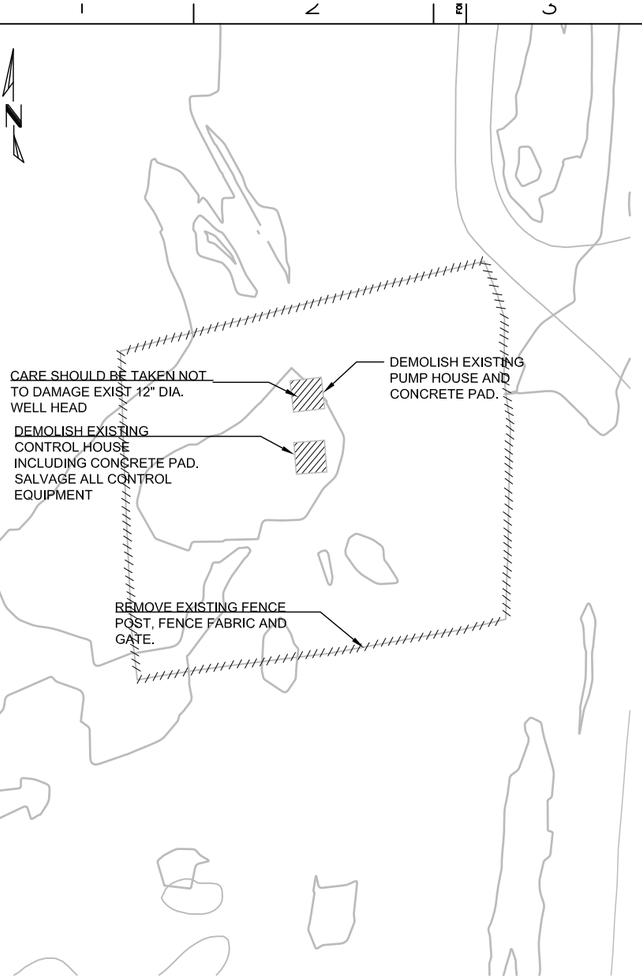

DEMOLITION PLAN

NTS

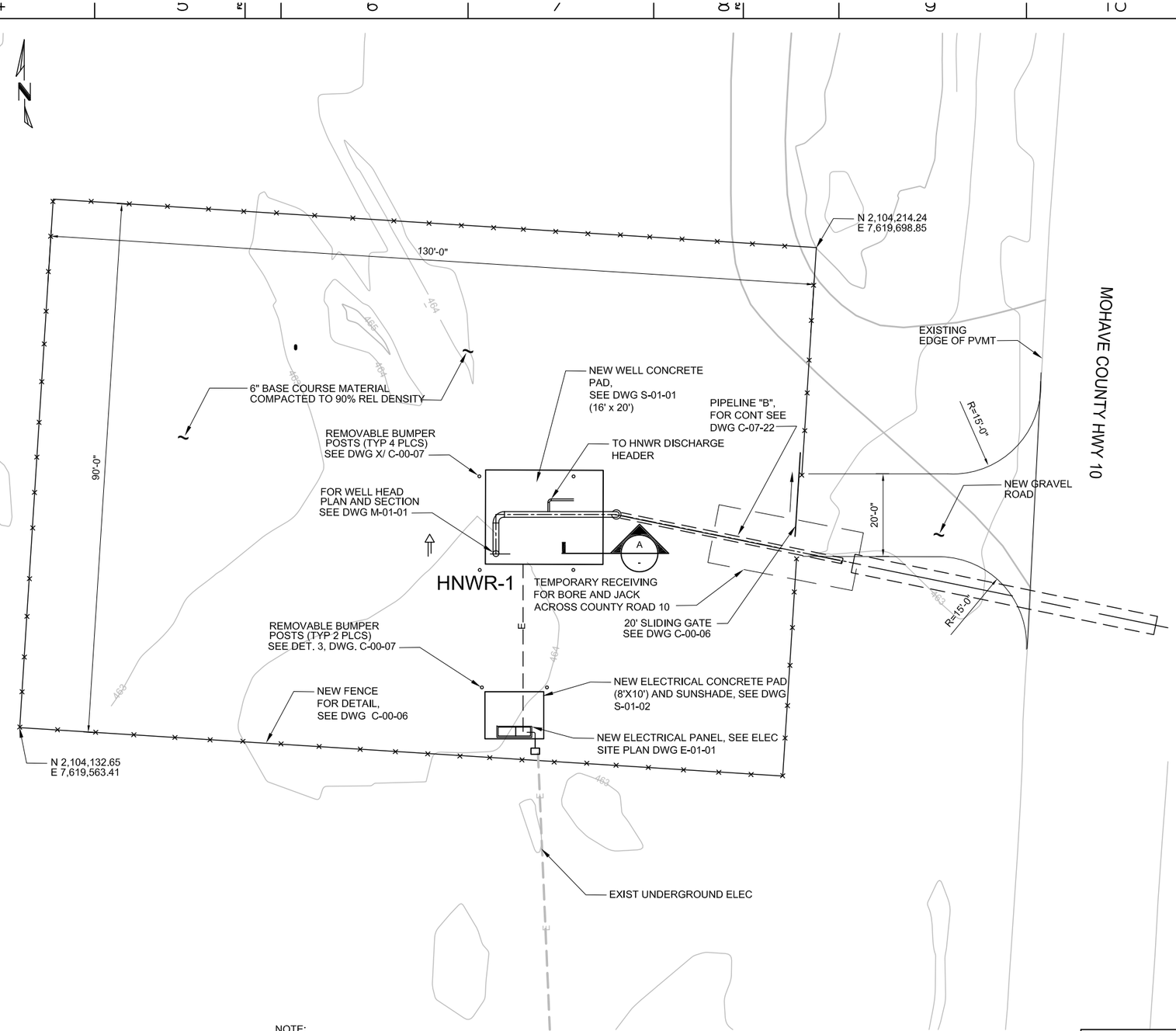

NOTE:

SURVEILLANCE CAMERA LOCATION, CARD READER FOR SLIDING GATE AND DETAILS TO BE DETERMINED LATER.

HNWR WELL SITE PLOT PLAN

1"=10'-0"

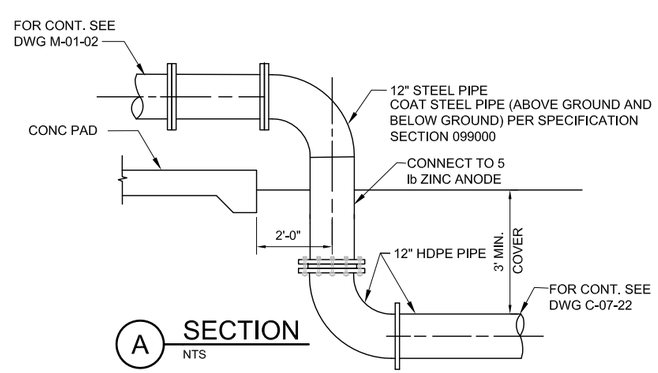

A SECTION

NTS

0 10 20 30

SCALE: 1"=10'

DRAFT
NOT FOR
CONSTRUCTION

E2 Consulting Engineers, Inc.
1900 Powell Street, Ste. 250
Emeryville, CA 94608
(510) 652-1164

CH2MHILL®

NO.	DATE	DESCRIPTION	GM/SPEC	DWN	CHKD	SUPV	APVD BY
		REVISIONS					

NO.	DATE	DESCRIPTION	GM/SPEC	DWN	CHKD	SUPV	APVD BY
		REVISIONS					

APPROVED BY	
SO	
SUPV	
DSGN	PT
DWN	PC
CHKD	PT
OK	PT
DATE	4/5/13
SCALES	1" = 10'

TOPOCK GROUNDWATER REMEDIATION PROJECT

HNWR FRESH WATER SUPPLY WELL SITE PLAN

GAS TRANSMISSION & DISTRIBUTION
PACIFIC GAS AND ELECTRIC COMPANY
SAN FRANCISCO, CALIFORNIA

MICROFILM	
BILL OF MATL	
DWG LIST	
SUPSDS	
SUPSD BY	
SHEET NO. of SHEETS	
C-01-01	REV

PLOT DATE: $PLOTDATE PLOT TIME: $PLOTTIME

FILENAME: E2-C-XXX-0101AD.DWG

N1808

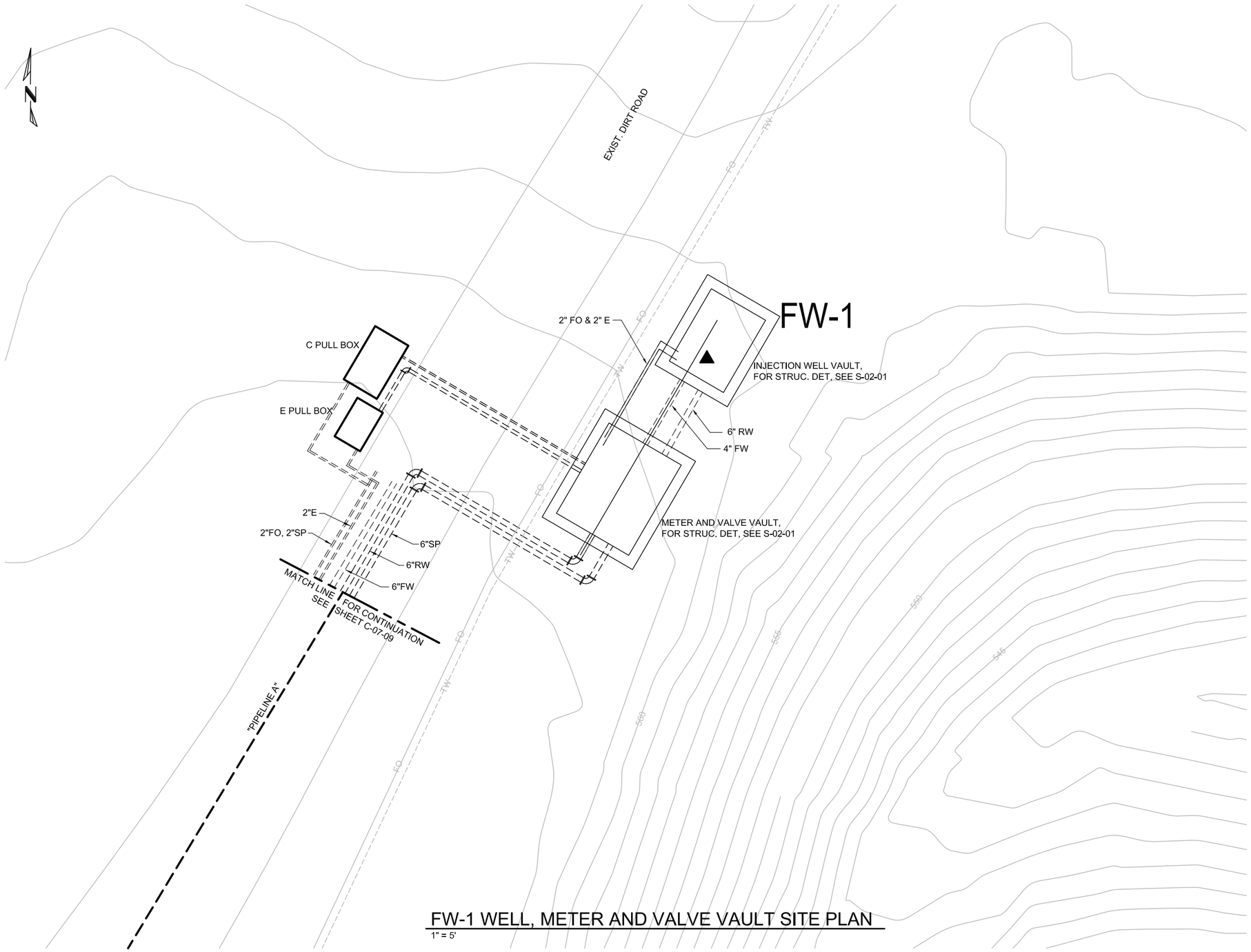

NOTES:

1. FOR STANDARD PLANS OF WELL VAULT AND METER VAULT, SEE DWG S-02-01.
2. FOR MECHANICAL PLANS OF WELL VAULT AND METER VAULT, SEE DWG M-02-01.
3. FOR PLC PANEL, SEE DWG E-02-01.

FW-1 WELL, METER AND VALVE VAULT SITE PLAN

1" = 5'

0 5 10 15

SCALE: 1"=5'

DRAFT
NOT FOR
CONSTRUCTION

E2 Consulting Engineers, Inc.
1900 Powell Street, Ste. 250
Emeryville, CA 94608
(510) 652-1164

CH2MHILL®

NO.	DATE	DESCRIPTION	GM/SPEC	DWN	CHKD	SUPV	APVD BY

REVISIONS

NO.	DATE	DESCRIPTION	GM/SPEC	DWN	CHKD	SUPV	APVD BY

REVISIONS

APPROVED BY	
SO	
SUPV	
DSGN	PT
DWN	PC
CHKD	PT
OK	PT
DATE	4/5/13
SCALES	1" =5'-0"

TOPOCK GROUNDWATER REMEDIATION PROJECT

FRESHWATER INJECTION WELL
FW-1 - SITE PLAN

GAS TRANSMISSION & DISTRIBUTION
PACIFIC GAS AND ELECTRIC COMPANY
SAN FRANCISCO, CALIFORNIA

MICROFILM	
BILL OF MATL	
DWG LIST	
SUPSDS	
SUPSD BY	
SHEET NO. of SHEETS	REV
C-02-01	

FILENAME: E2-C-XXX-0201AD.DWG
PLOT DATE: $PLOTDATE PLOT TIME: $PLOTTIME

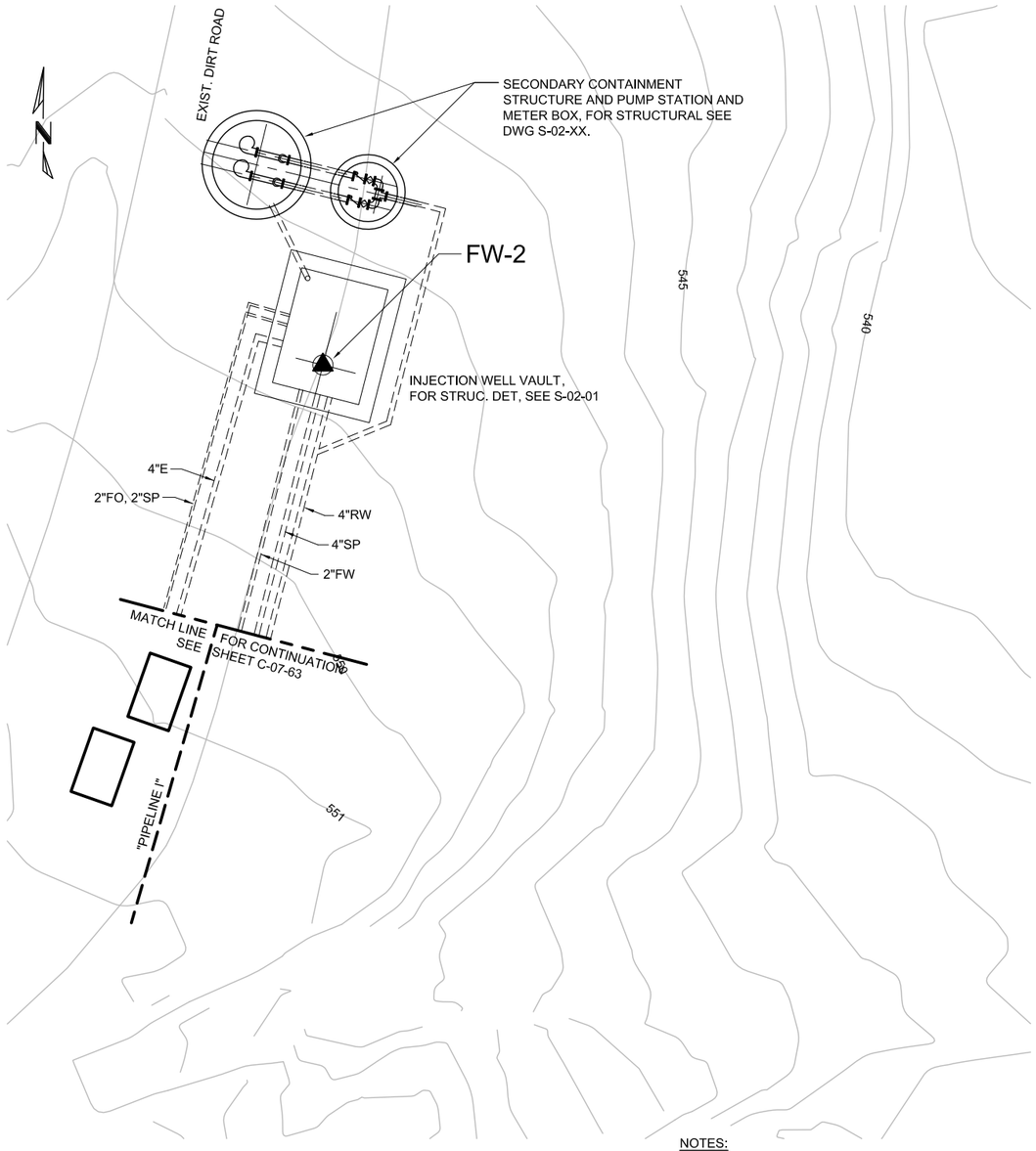

FW-2 WELL VAULT SITE PLAN

1" = 5'

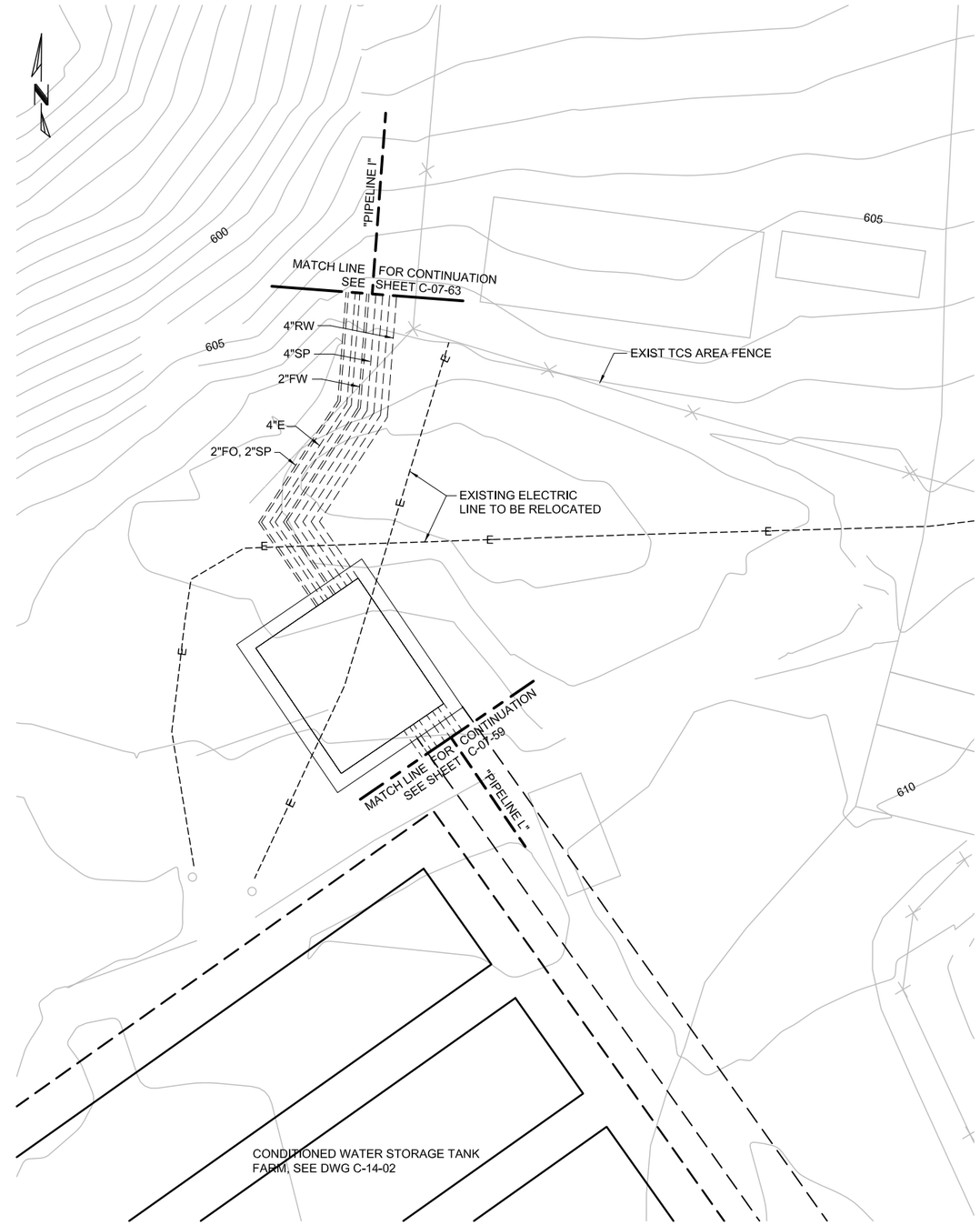

FW-2 METER AND VALVE VAULT SITE PLAN

1" = 5'

NOTES:

1. FOR STANDARD PLANS OF WELL VAULT AND METER VAULT, SEE DWG S-02-01.
2. FOR MECHANICAL PLANS OF WELL VAULT AND METER VAULT, SEE DWG M-02-01.
3. FOR PLC PANEL, SEE DWG E-02-01.
4. FOR STRUCTURAL PLANS OF SECONDARY CONTAINMENT STRUCTURE AND VALVE BOX, SEE DWG S-02-XX
5. FOR MECHANICAL PLANS OF SECONDARY CONTAINMENT STRUCTURE, SEE DWG M-02-XX.

0 5 10 15

SCALE: 1"=5'

DRAFT
NOT FOR
CONSTRUCTION

E2 Consulting Engineers, Inc.
1900 Powell Street, Ste. 250
Emeryville, CA 94608
(510) 652-1164

CH2MHILL®

NO.	DATE	DESCRIPTION	GM/SPEC	DWN	CHKD	SUPV	APVD BY

REVISIONS

NO.	DATE	DESCRIPTION	GM/SPEC	DWN	CHKD	SUPV	APVD BY

REVISIONS

APPROVED BY

SO	
SUPV	
DSGN	PT
DWN	PC
CHKD	PT
OK	PT
DATE	4/5/13
SCALES	1" =5'-0"

TOPOCK GROUNDWATER REMEDIATION PROJECT

FRESH WATER INJECTION WELL
FW-2 - SITE PLAN

GAS TRANSMISSION & DISTRIBUTION
PACIFIC GAS AND ELECTRIC COMPANY
SAN FRANCISCO, CALIFORNIA

MICROFILM	
BILL OF MATL	
DWG LIST	
SUPSDS	
SUPSD BY	
SHEET NO. of SHEETS	
C-02-02	REV

PLOT DATE: $PLOTDATE PLOT TIME: $PLOTTIME

FILENAME: E2-C-XXX-0202AD.DWG

N1808

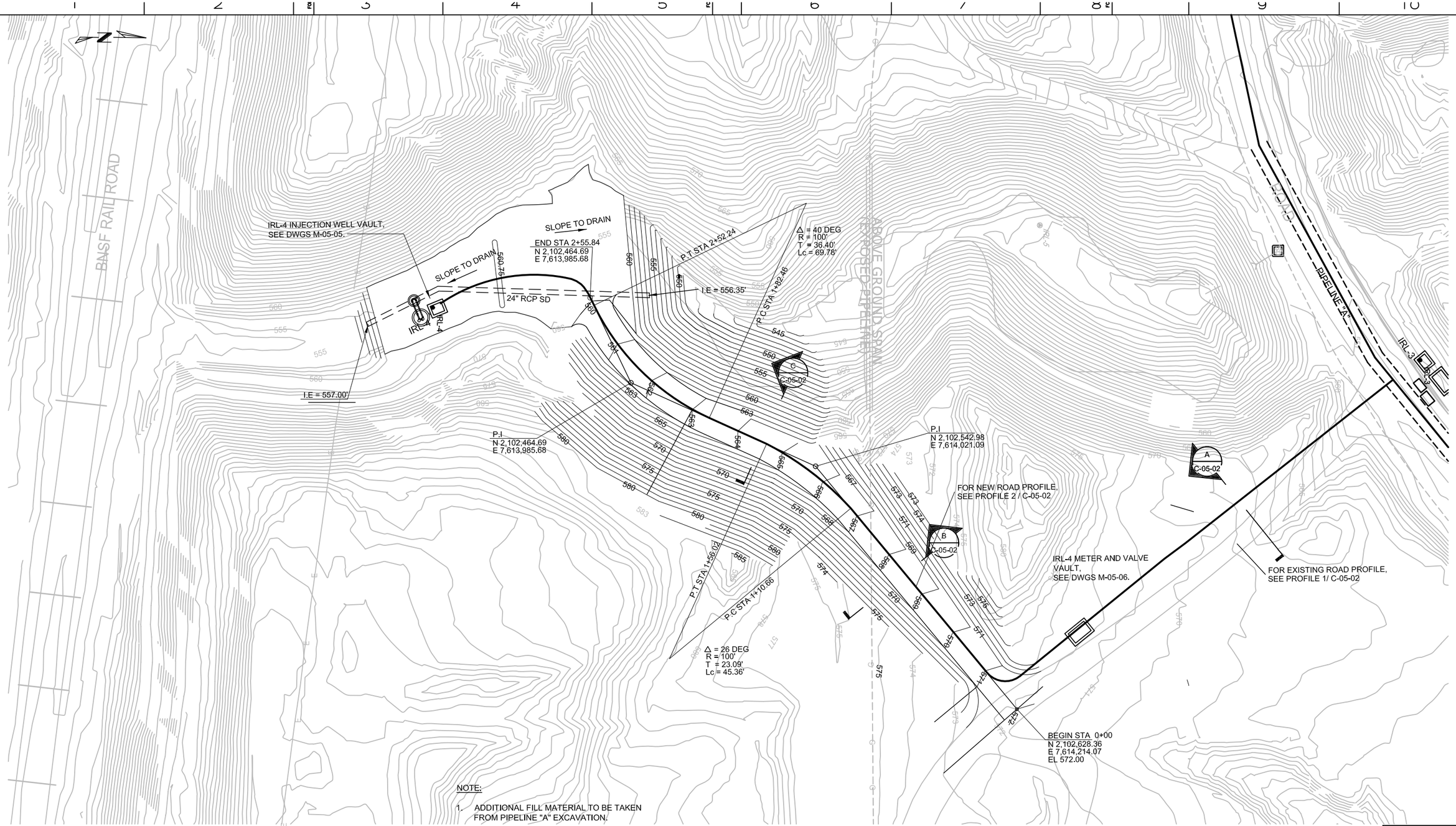

NOTE:

1. ADDITIONAL FILL MATERIAL TO BE TAKEN FROM PIPELINE "A" EXCAVATION.

IRL-4 ACCESS ROAD - SITE PLAN

1" = 10'

0 5 10 15

SCALE: 1"=5'

DRAFT
NOT FOR
CONSTRUCTION

E2 Consulting Engineers, Inc.
1900 Powell Street, Ste. 250
Emeryville, CA 94608
(510) 652-1164

CH2MHILL®

NO.	DATE	DESCRIPTION	GM/SPEC	DWN	CHKD	SUPV	APVD BY	NO.	DATE	DESCRIPTION	GM/SPEC	DWN	CHKD	SUPV	APVD BY

REVISIONS REVISIONS

APPROVED BY	
SO	
SUPV	
DSGN	PT
DWN	PC
CHKD	PT
OK	PT
DATE	4/5/13
SCALES	1" =10'

TOPOCK GROUNDWATER REMEDIATION PROJECT
IRL-4 ACCESS ROAD SITE PLAN

GAS TRANSMISSION & DISTRIBUTION
PACIFIC GAS AND ELECTRIC COMPANY
SAN FRANCISCO, CALIFORNIA

MICROFILM	
BILL OF MATL	
DWG LIST	
SUPSDS	
SUPSD BY	
SHEET NO. of SHEETS	REV
C-05-01	

PLOT DATE: $PLOTDATE PLOT TIME: $PLOTTIME

FILENAME: E2-C-XXX-0501AD.DWG

N1808

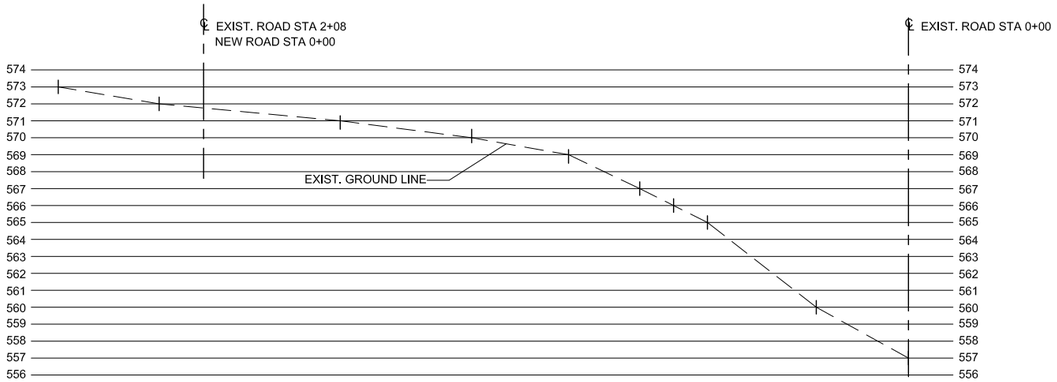

1 EXISTING ROAD PROFILE
NTS
C-05-01

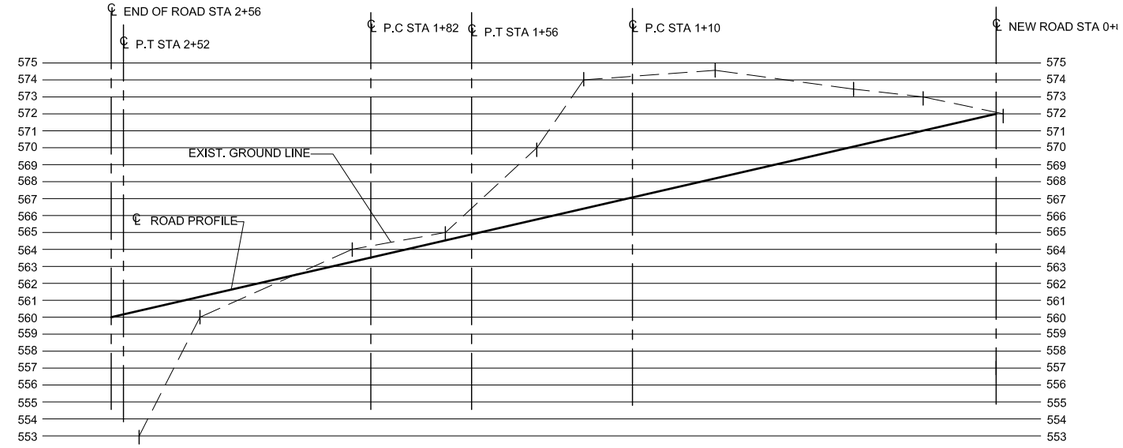

2 NEW ROAD PROFILE
NTS
C-05-01

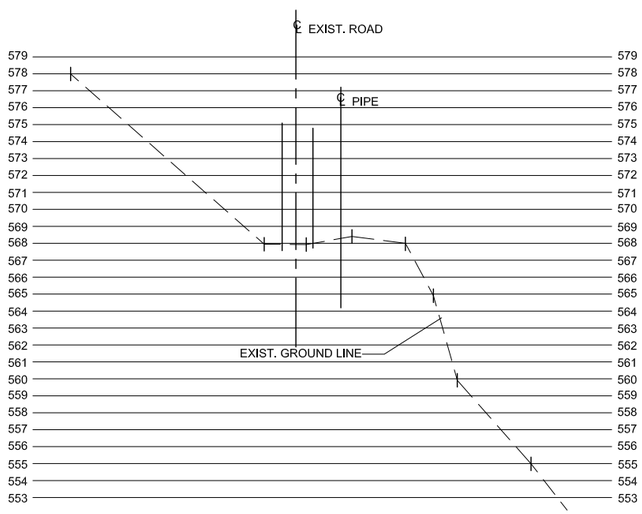

A SECTION
H: 1" = 20'; V: 1" = 5'
C-05-01

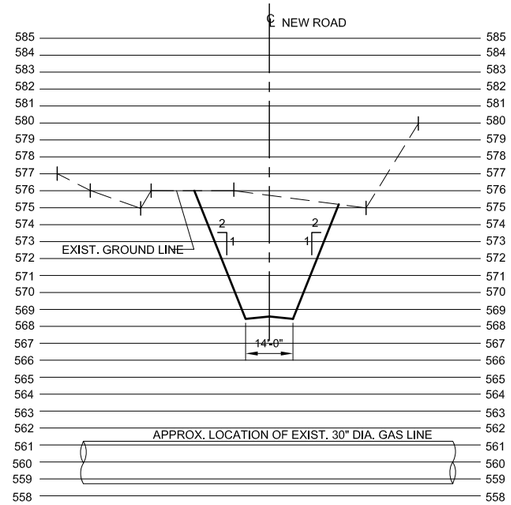

B SECTION
H: 1" = 20'; V: 1" = 5'
C-05-01

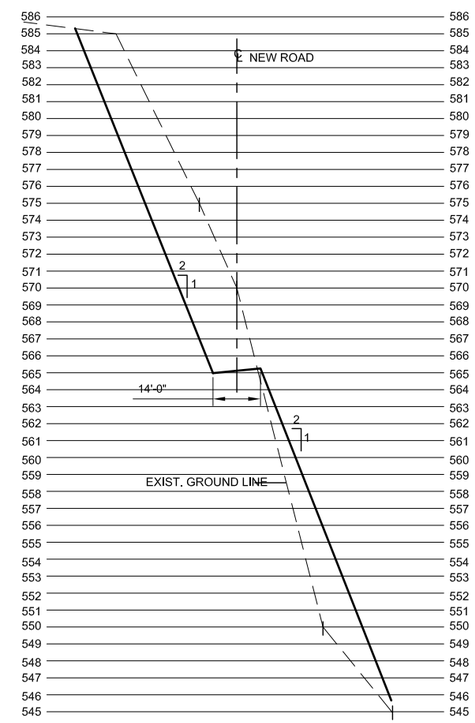

C SECTION
H: 1" = 20'; V: 1" = 5'
C-05-01

0 20 40 60
HORZ: SCALE: 1"=20'

0 5 10 15
VERT: SCALE: 1"=5'

DRAFT
NOT FOR
CONSTRUCTION

E2 Consulting Engineers, Inc.
1900 Powell Street, Ste. 250
Emeryville, CA 94608
(510) 652-1164

CH2MHILL®

NO.	DATE	DESCRIPTION	GM/SPEC	DWN	CHKD	SUPV	APVD BY
		REVISIONS					

NO.	DATE	DESCRIPTION	GM/SPEC	DWN	CHKD	SUPV	APVD BY
		REVISIONS					

APPROVED BY
SO
SUPV
DSGN PT
DWN PC
CHKD PT
OK PT
DATE 4/5/13
SCALES 1" =20'

TOPOCK GROUNDWATER REMEDIATION PROJECT

IRL-4 ACCESS ROAD - SECTIONS

GAS TRANSMISSION & DISTRIBUTION
PACIFIC GAS AND ELECTRIC COMPANY
SAN FRANCISCO, CALIFORNIA

MICROFILM
BILL OF MATL
DWG LIST
SUPSDS
SUPSD BY
SHEET NO. of SHEETS
C-05-02
REV

PLOT DATE: $PLOTDATE PLOT TIME: $PLOTTIME
FILENAME: E2-C-XXX-0502AD.DWG

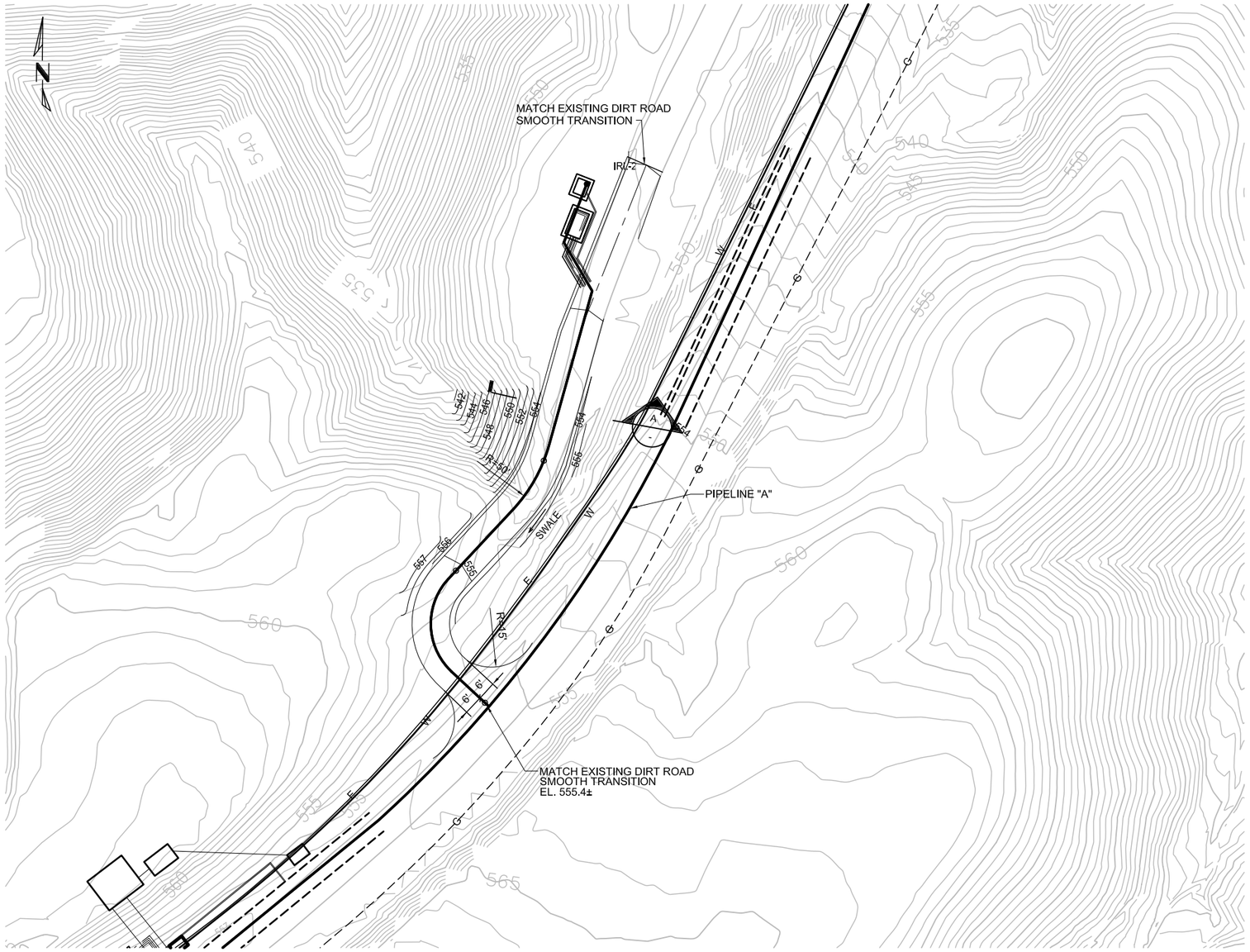

IRL-2 ACCESS ROAD - SITE PLAN

1" = 20'

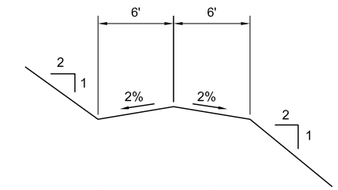

A SECTION
NTS

0 20 40 60
SCALE: 1"=20'

DRAFT
NOT FOR
CONSTRUCTION

E2 Consulting Engineers, Inc.
1900 Powell Street, Ste. 250
Emeryville, CA 94608
(510) 652-1164

CH2MHILL®

NO.	DATE	DESCRIPTION	GM/SPEC	DWN	CHKD	SUPV	APVD BY

REVISIONS

NO.	DATE	DESCRIPTION	GM/SPEC	DWN	CHKD	SUPV	APVD BY

REVISIONS

APPROVED BY
SO
SUPV
DSGN PT
DWN PC
CHKD PT
OK PT
DATE 4/5/13
SCALES 1" = 20'

TOPOCK GROUNDWATER REMEDIATION PROJECT
IRL-2 ACCESS ROAD
PLAN AND SECTION

GAS TRANSMISSION & DISTRIBUTION
PACIFIC GAS AND ELECTRIC COMPANY
SAN FRANCISCO, CALIFORNIA

MICROFILM
BILL OF MATL
DWG LIST
SUPSDS
SUPSD BY
SHEET NO. of SHEETS
C-05-03
REV

PLOT DATE: $PLOTDATE PLOT TIME: $PLOTTIME
FILENAME: E2-C-XXX-0503AD.DWG

N1808

NOTES:

1. FOR INJECTION WELL AND METER VAULT STRUCTURAL DETAILS, SEE DWGS. S-05-01 THROUGH S-05-05.
2. FOR WELL, METER AND VALVE VAULT MECHANICAL DETAILS, SEE DWGS. M-05-05 AND M-05-06.
3. SURVEILLANCE CAMERA LOCATION AND DETAILS TO BE DETERMINED LATER.

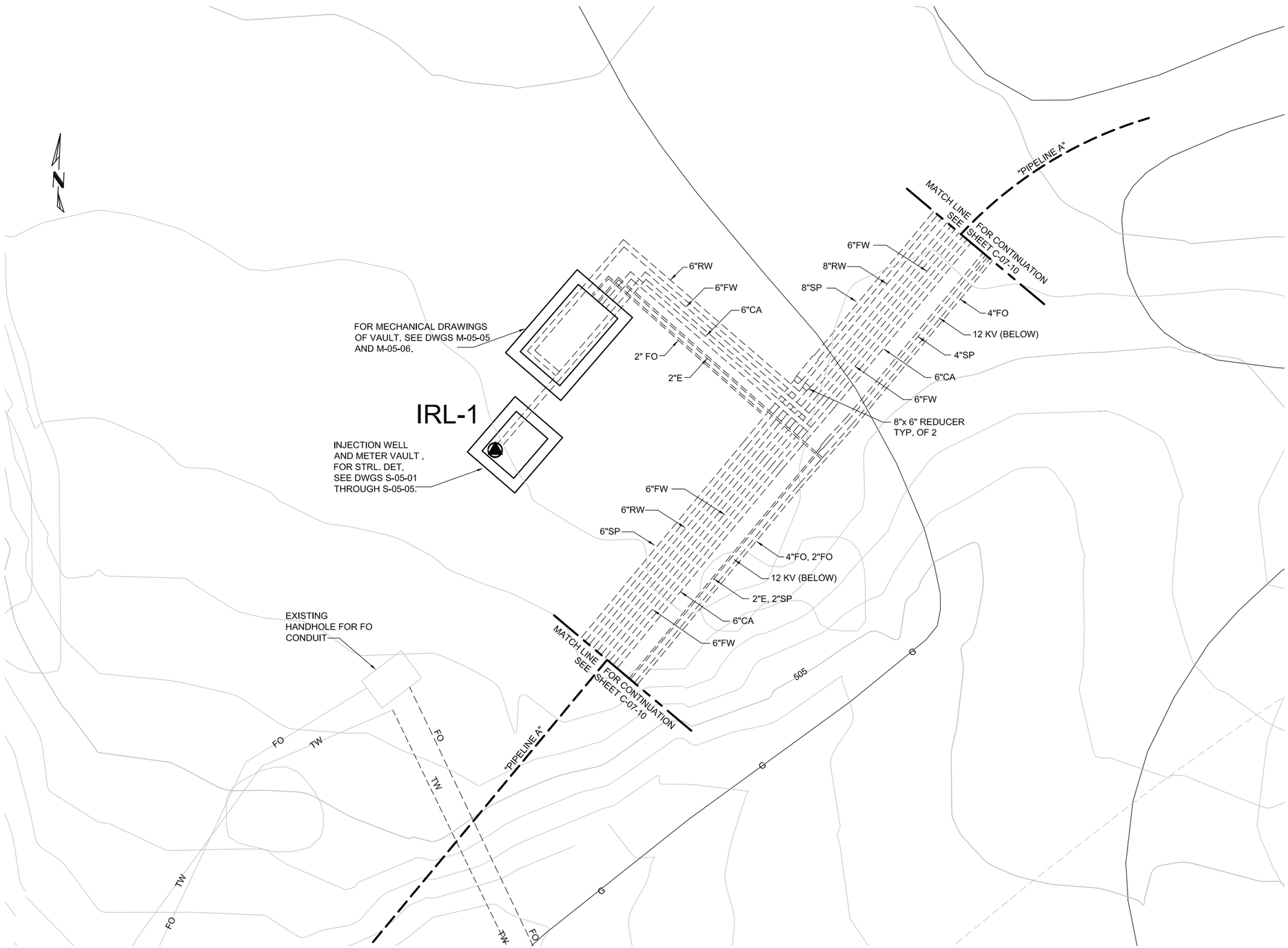

IRL-1 WELL, METER AND VALVE VAULT SITE PLAN

1" = 5'

0 5 10 15

SCALE: 1"=5'

DRAFT NOT FOR CONSTRUCTION

E2 Consulting Engineers, Inc.
1900 Powell Street, Ste. 250
Emeryville, CA 94608
(510) 652-1164

CH2MHILL®

NO.	DATE	DESCRIPTION	GM/SPEC	DWN	CHKD	SUPV	APVD BY
G		DIRT ROAD					

REVISIONS

APPROVED BY
SO
SUPV
DSGN PT
DWN PC
CHKD PT
OK PT
DATE 4/5/13
SCALES 1" =5'-0"

TOPOCK GROUNDWATER REMEDIATION PROJECT
INNER RECIRCULATION LOOP
INJECTION WELL IRL-1
SITE PLAN
GAS TRANSMISSION & DISTRIBUTION
PACIFIC GAS AND ELECTRIC COMPANY
SAN FRANCISCO, CALIFORNIA

MICROFILM
BILL OF MATL
DWG LIST
SUPSDS
SUPSD BY
SHEET NO. of SHEETS
C-05-04
REV

FILENAME: E2-C-XXX-0504AD.DWG
PLOT DATE: $PLOTDATE PLOT TIME: $PLOTTIME

NOTES:

1. FOR INJECTION WELL AND METER VAULT STRUCTURAL DETAILS, SEE DWGS. S-05-01 THROUGH S-05-05.
2. FOR WELL, METER AND VALVE VAULT MECHANICAL DETAILS, SEE DWGS. M-05-05 AND M-05-06.
3. SURVEILLANCE CAMERA LOCATION AND DETAILS TO BE DETERMINED LATER.

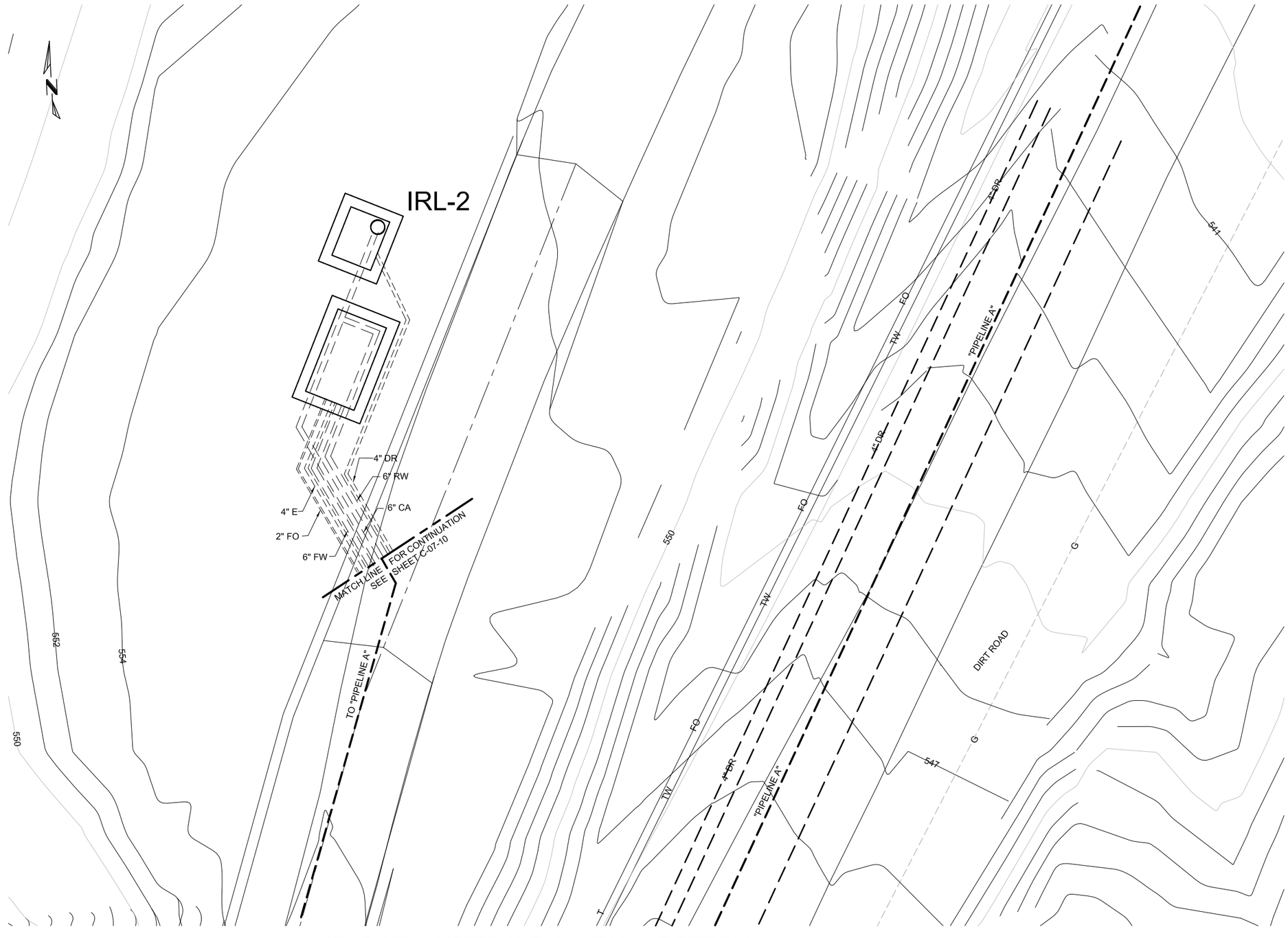

IRL-2 WELL, METER AND VALVE VAULT SITE PLAN

1" = 5'

0 5 10 15

SCALE: 1"=5'

DRAFT
NOT FOR
CONSTRUCTION

E2 Consulting Engineers, Inc.
1900 Powell Street, Ste. 250
Emeryville, CA 94608
(510) 652-1164

CH2MHILL®

NO.	DATE	DESCRIPTION	GM/SPEC	DWN	CHKD	SUPV	APVD BY
		REVISIONS					

NO.	DATE	DESCRIPTION	GM/SPEC	DWN	CHKD	SUPV	APVD BY
		REVISIONS					

APPROVED BY	
SO	
SUPV	
DSGN	PT
DWN	PC
CHKD	PT
OK	PT
DATE	4/5/13
SCALES	1" =5'-0"

TOPOCK GROUNDWATER REMEDIATION PROJECT
INNER RECIRCULATION LOOP
INJECTION WELL IRL-2
SITE PLAN
GAS TRANSMISSION & DISTRIBUTION
PACIFIC GAS AND ELECTRIC COMPANY
SAN FRANCISCO, CALIFORNIA

MICROFILM	
BILL OF MATL	
DWG LIST	
SUPSDS	
SUPSD BY	
SHEET NO. of SHEETS	REV
C-05-05	

FILENAME: E2-C-XXX-0505AD.DWG
PLOT DATE: $PLOTDATE PLOT TIME: $PLOTTIME
FOLD
N1808

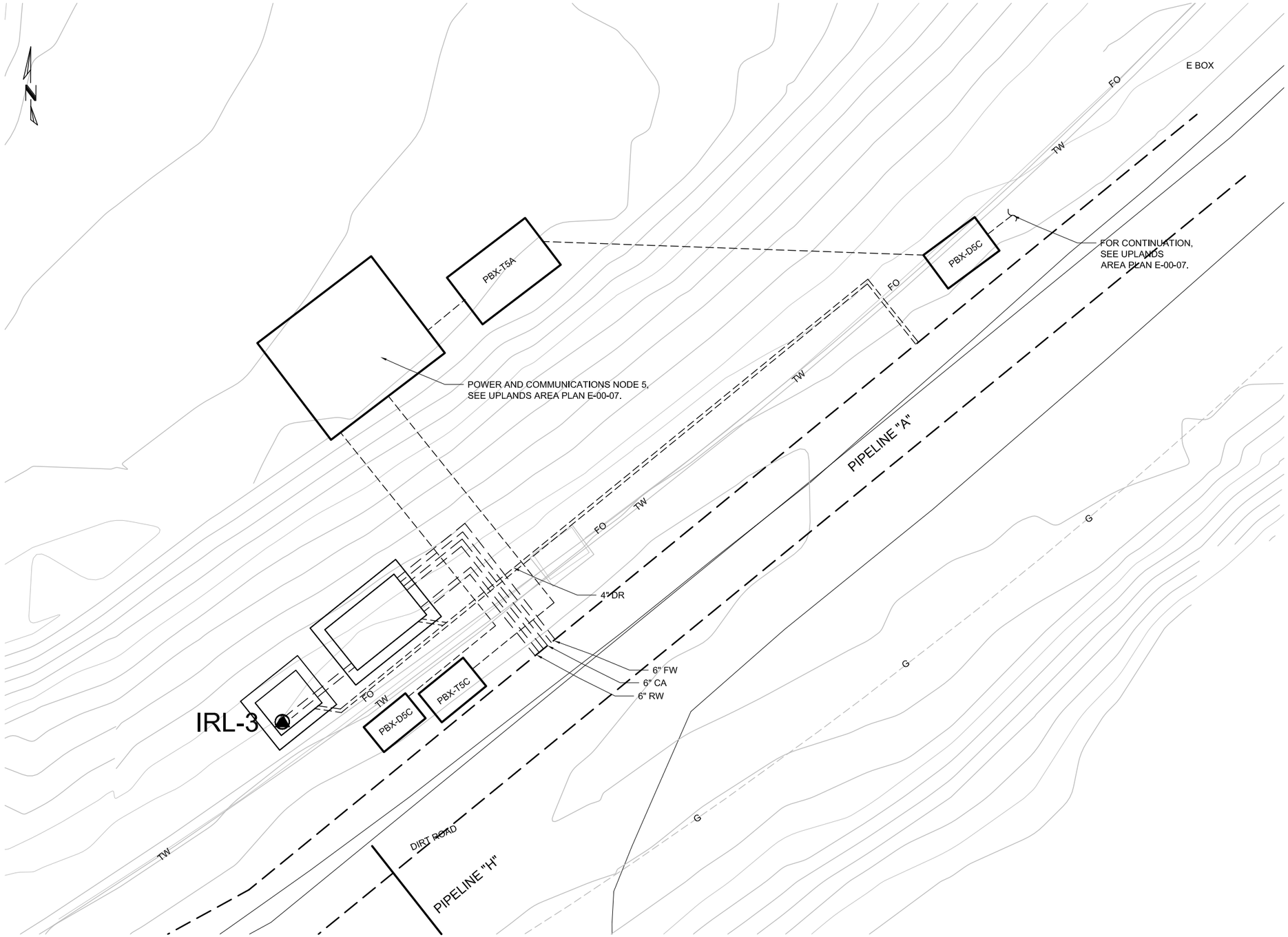

NOTES:

1. FOR INJECTION WELL AND METER VAULT STRUCTURAL DETAILS, SEE DWGS. S-05-01 THROUGH S-05-05.
2. FOR WELL, METER AND VALVE VAULT MECHANICAL DETAILS, SEE DWGS. M-05-05 AND M-05-06.
3. SURVEILLANCE CAMERA LOCATION AND DETAILS TO BE DETERMINED LATER.

IRL-3 WELL, METER AND VALVE VAULT SITE PLAN

1" = 5'

0 5 10 15

SCALE: 1"=5'

DRAFT
NOT FOR
CONSTRUCTION

E2 Consulting Engineers, Inc.
1900 Powell Street, Ste. 250
Emeryville, CA 94608
(510) 652-1164

CH2MHILL®

NO.	DATE	DESCRIPTION	GM/SPEC	DWN	CHKD	SUPV	APVD BY
		REVISIONS					

NO.	DATE	DESCRIPTION	GM/SPEC	DWN	CHKD	SUPV	APVD BY
		REVISIONS					

APPROVED BY
SO
SUPV
DSGN PT
DWN PC
CHKD PT
OK PT
DATE 4/5/13
SCALES 1" =5'-0"

TOPOCK GROUNDWATER REMEDIATION PROJECT
INNER RECIRCULATION LOOP
INJECTION WELL IRL-3
SITE PLAN
GAS TRANSMISSION & DISTRIBUTION
PACIFIC GAS AND ELECTRIC COMPANY
SAN FRANCISCO, CALIFORNIA

MICROFILM
BILL OF MATL
DWG LIST
SUPSDS
SUPSD BY
SHEET NO. of SHEETS
C-05-06
REV

PLOT DATE: $PLOTDATE PLOT TIME: $PLOTTIME
FILENAME: E2-C-XXX-0506AD.DWG

NOTES:

1. FOR INJECTION WELL AND METER VAULT STRUCTURAL DETAILS, SEE DWGS. S-05-01 THROUGH S-05-05.
2. FOR WELL, METER AND VALVE VAULT MECHANICAL DETAILS, SEE DWGS. M-05-05 AND M-05-06.
3. SURVEILLANCE CAMERA LOCATION AND DETAILS TO BE DETERMINED LATER.

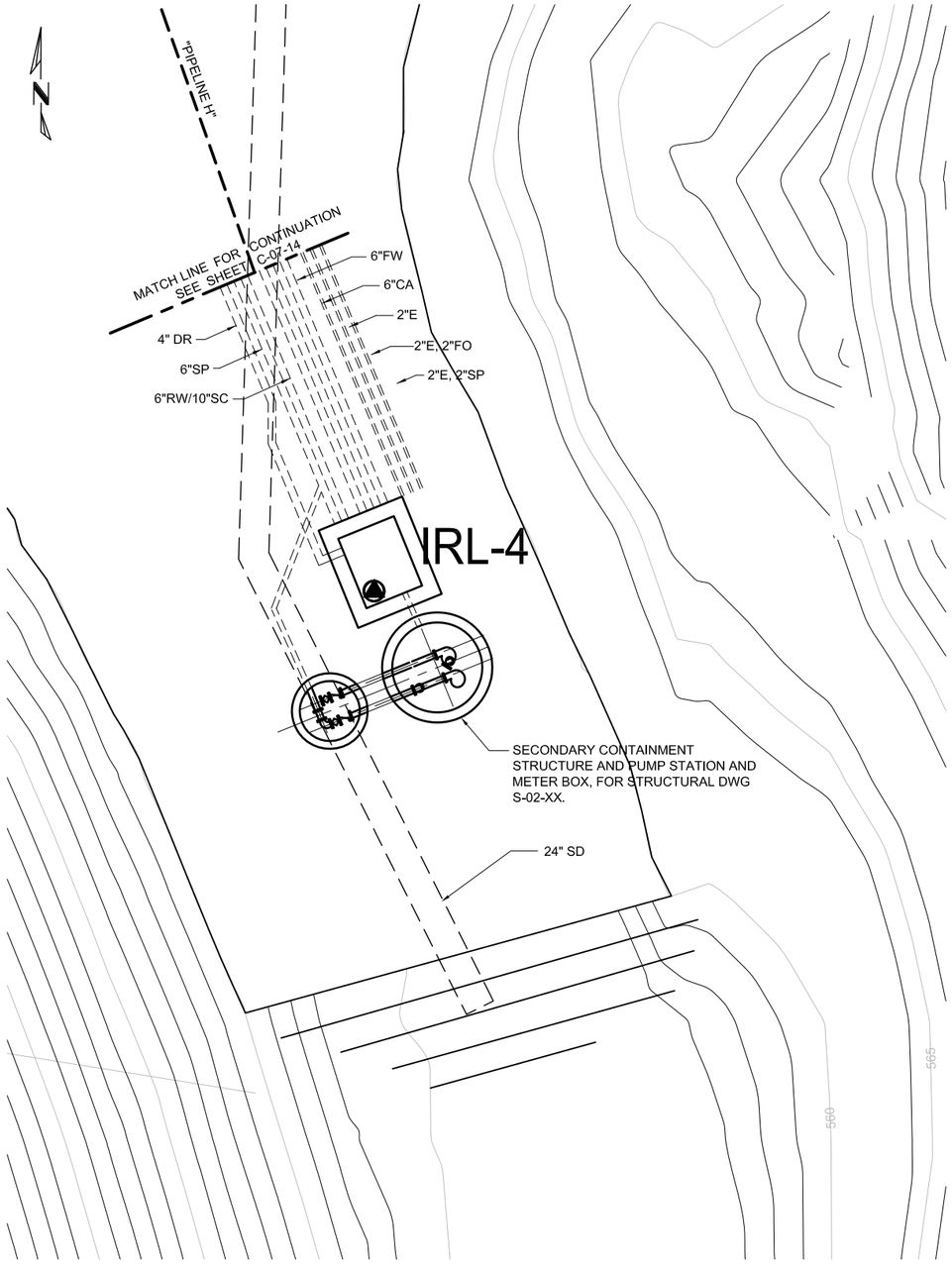

IRL-4 WELL VAULT SITE PLAN

1" = 5'

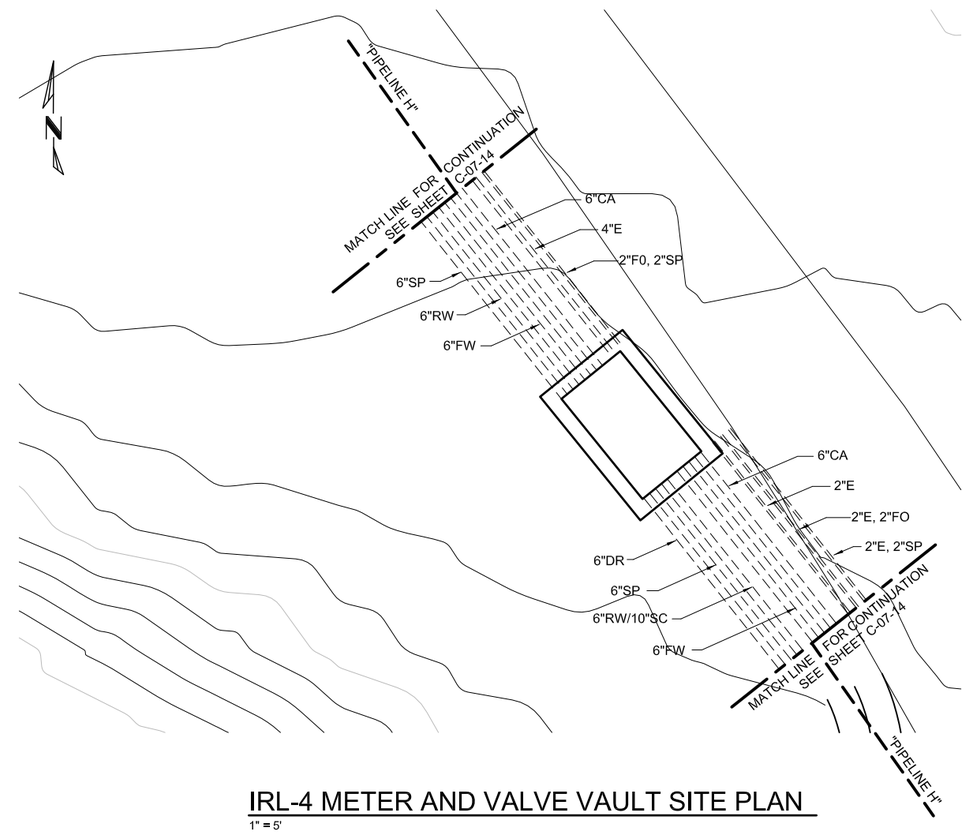

IRL-4 METER AND VALVE VAULT SITE PLAN

1" = 5'

0 5 10 15

SCALE: 1"=5'

DRAFT
NOT FOR
CONSTRUCTION

E2 Consulting Engineers, Inc.
1900 Powell Street, Ste. 250
Emeryville, CA 94608
(510) 652-1164

CH2MHILL®

NO.	DATE	DESCRIPTION	GM/SPEC	DWN	CHKD	SUPV	APVD BY

REVISIONS

NO.	DATE	DESCRIPTION	GM/SPEC	DWN	CHKD	SUPV	APVD BY

REVISIONS

APPROVED BY	
SO	
SUPV	
DSGN	PT
DWN	PC
CHKD	PT
OK	PT
DATE	4/5/13
SCALES	1" =5'-0"

TOPOCK GROUNDWATER REMEDIATION PROJECT
INNER RECIRCULATION LOOP
INJECTION WELL IRL-4
SITE PLAN
GAS TRANSMISSION & DISTRIBUTION
PACIFIC GAS AND ELECTRIC COMPANY
SAN FRANCISCO, CALIFORNIA

MICROFILM	
BILL OF MATL	
DWG LIST	
SUPSDS	
SUPSD BY	
SHEET NO. of SHEETS	
C-05-07	REV

PLOT DATE: $PLOTDATE PLOT TIME: $PLOTTIME

FILENAME: E2-C-XXX-0507AD.DWG

N1808

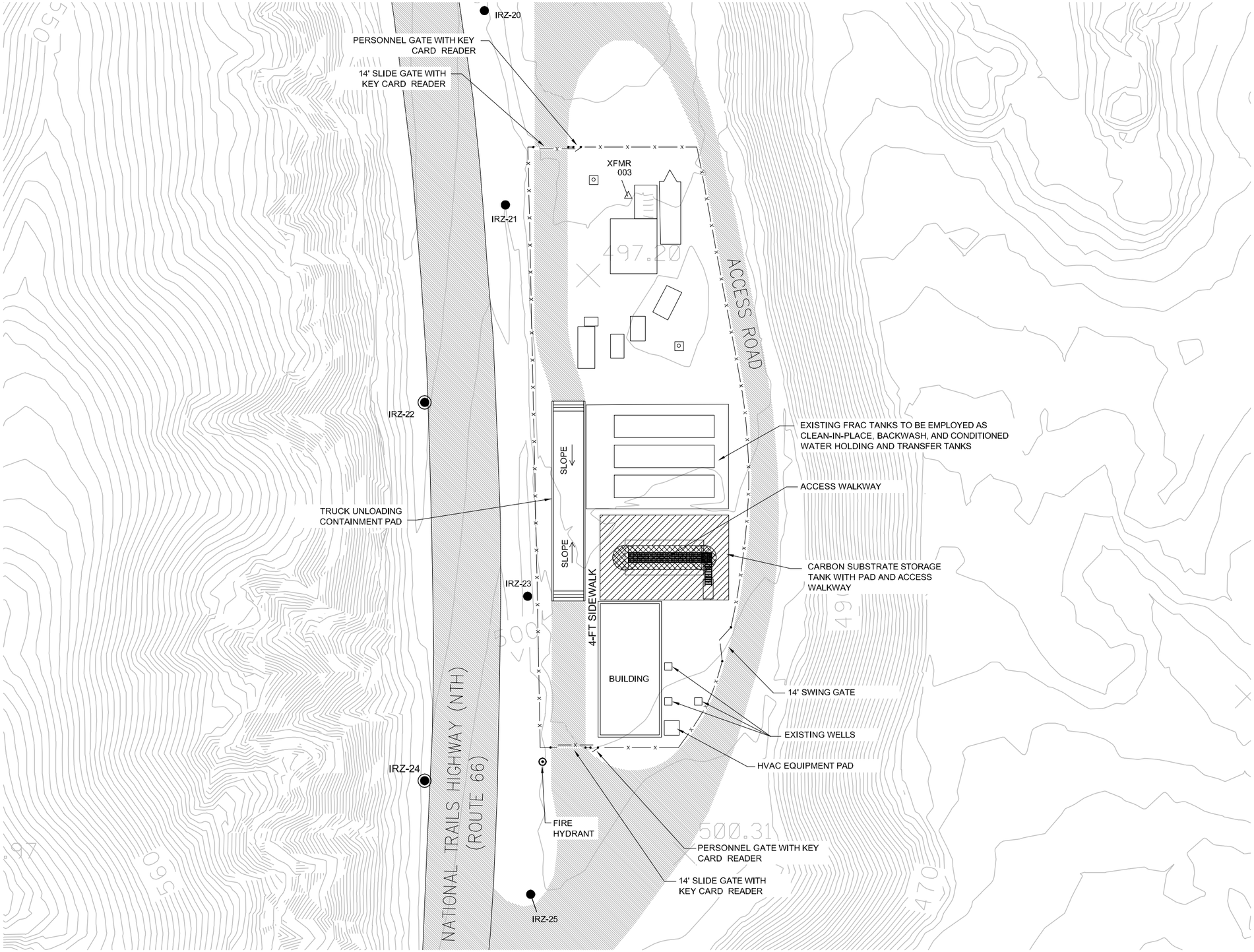

NOTES:

1. ELECTRICAL HAZARD CLASSIFICATIONS:
   - A. CLASS I, DIV I WITHIN A 5-FT RADIUS OF THE CARBON STORAGE TANK VENTS.
   - B. CLASS I, DIV II WITHIN A 10-FT RADIUS OF THE CARBON STORAGE TANK VENTS (FROM VENT ELEVATION TO GROUND).
   - C. CLASS I, DIV II FROM GROUND SURFACE TO 18-INCHES ABOVE GRADE WITHIN A 10-FT RADIUS OF THE TANK FOOTPRINT.
   - D. CLASS I, DIV II WITHIN THE CARBON AMENDMENT BUILDING WHERE DOSING LINES CONTAIN >10% EtOH, FIRE RATED WALLS MAY BE USED TO MINIMIZE THE FOOTPRINT OF THE CLASSIFIED AREA.
   - E. CLASS I, DIV II WITHIN A 10-FT RADIUS OF THE VENTS OF THE EQUIVALENT HAZ CLASS LOCATIONS WITHIN THE BUILDING.
2. CARBON AMENDMENT AND WELL MAINTENANCE BUILDING FOUNDATIONS INCLUDE A 6" CONCRETE CURB TO PROVIDE SECONDARY CONTAINMENT FOR PROCESSES WITHIN BUILDINGS.
3. ENTIRE NTH IRZ FACILITY WILL BE ENCLOSED WITHIN A SECURITY FENCE TO BE FULLY SHOWN IN LATER DRAWING SET REVISIONS.
4. SECURITY CAMERAS AND LIGHTING FIXTURES SHALL BE PROVIDED BY OTHERS.

- DRAFT -
NOT FOR CONSTRUCTION

ETIC ENGINEERING

ARCADIS

NO.	DATE	DESCRIPTION	GM/SPEC	DWN	CHKD	SUPV	APVD BY
0	04/05/13	INTERMEDIATE (60%) DESIGN SUBMITTAL		AJW	KLD	JPB	JEF

REVISIONS

APPROVED BY: JEF

SO	
SUPV	JPB
DSGN	KLD
DWN	AJW
CHKD	JPB
OK	JEF
DATE	04/05/13
SCALES	1" = 20'

TOPOCK GROUNDWATER REMEDIATION PROJECT

MW-20 BENCH AREA PLAN

GAS TRANSMISSION & DISTRIBUTION
PACIFIC GAS AND ELECTRIC COMPANY
SAN FRANCISCO, CALIFORNIA

MICROFILM
BILL OF MATL
DWG LIST
SUPSDS
SUPSD BY
SHEET NO. of SHEETS
C-06-01
REV

03/26/2013, 18:50, G:\Graphics\ART\TOPOCK-01\Submittal-60%_March2013\HILL Formatted\C-06-01-02-03_MW20Bench.dwg, Tab: C-06-01_Area Map

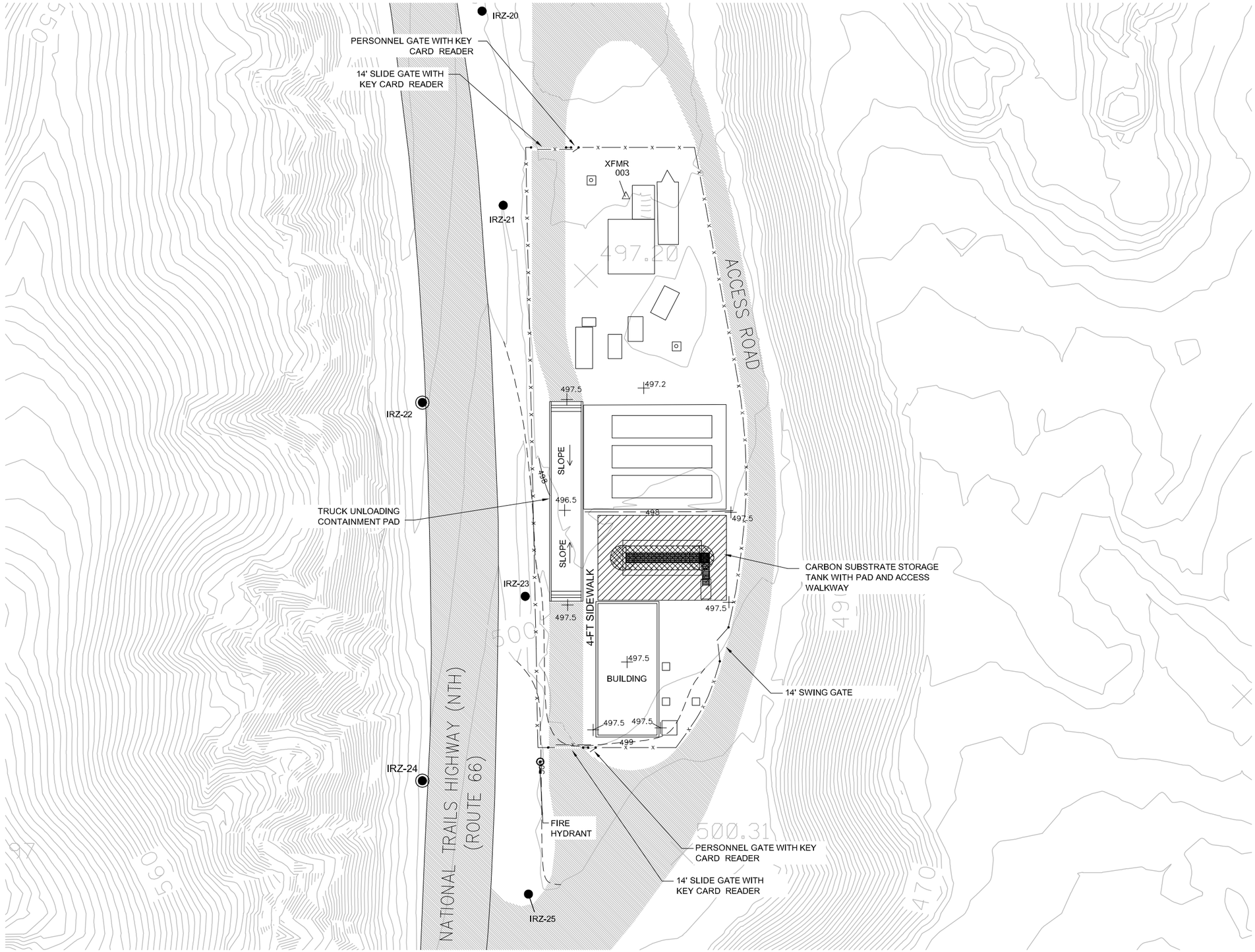

NOTES:

1. ELECTRICAL HAZARD CLASSIFICATIONS:
   - A. CLASS I, DIV I WITHIN A 5-FT RADIUS OF THE CARBON STORAGE TANK VENTS.
   - B. CLASS I, DIV II WITHIN A 10-FT RADIUS OF THE CARBON STORAGE TANK VENTS (FROM VENT ELEVATION TO GROUND).
   - C. CLASS I, DIV II FROM GROUND SURFACE TO 18-INCHES ABOVE GRADE WITHIN A 10-FT RADIUS OF THE TANK FOOTPRINT.
   - D. CLASS I, DIV II WITHIN THE CARBON AMENDMENT BUILDING WHERE DOSING LINES CONTAIN >10% EtOH, FIRE RATED WALLS MAY BE USED TO MINIMIZE THE FOOTPRINT OF THE CLASSIFIED AREA.
   - E. CLASS I, DIV II WITHIN A 10-FT RADIUS OF THE VENTS OF THE EQUIVALENT HAZ CLASS LOCATIONS WITHIN THE BUILDING.
2. CARBON AMENDMENT AND WELL MAINTENANCE BUILDING FOUNDATIONS INCLUDE A 6" CONCRETE CURB TO PROVIDE SECONDARY CONTAINMENT FOR PROCESSES WITHIN BUILDINGS.
3. ENTIRE NTH IRZ FACILITY WILL BE ENCLOSED WITHIN A SECURITY FENCE TO BE FULLY SHOWN IN LATER DRAWING SET REVISIONS.
4. SECURITY CAMERAS AND LIGHTING FIXTURES SHALL BE PROVIDED BY OTHERS.

N

0 20 40 60
SCALE: 1"=20'

- DRAFT -
NOT FOR CONSTRUCTION

ETIC ENGINEERING

ARCADIS

NO.	DATE	DESCRIPTION	GM/SPEC	DWN	CHKD	SUPV	APVD BY
0	04/05/13	INTERMEDIATE (60%) DESIGN SUBMITTAL		AJW	KLD	JPB	JEF

REVISIONS

APPROVED BY: JEF

SO	
SUPV	JPB
DSGN	KLD
DWN	AJW
CHKD	JPB
OK	JEF
DATE	04/05/13
SCALES	1" = 20'

TOPOCK GROUNDWATER REMEDIATION PROJECT

MW-20 BENCH GRADING PLAN

GAS TRANSMISSION & DISTRIBUTION
PACIFIC GAS AND ELECTRIC COMPANY
SAN FRANCISCO, CALIFORNIA

MICROFILM
BILL OF MATL
DWG LIST
SUPSDS
SUPSD BY
SHEET NO. of SHEETS
C-06-02
REV

03/26/2013, 18:50; G:\Graphics\ART\TOPOCK\011\Submittal-60%_March2013\HILL Formatted\C-06-01-02-03_MW20BenchLdwg, Tab: C-06-02_grading

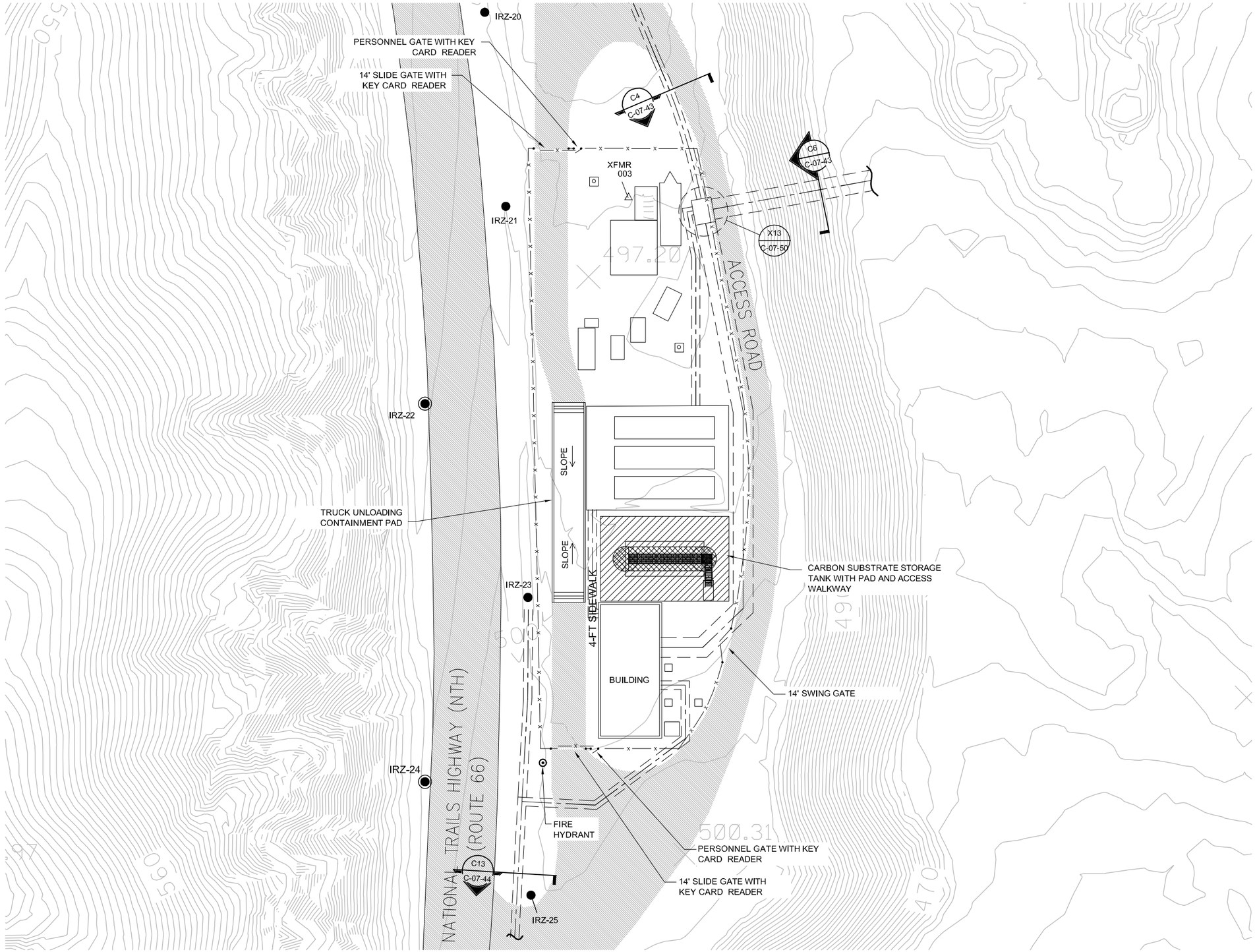

NOTES:

1. ELECTRICAL HAZARD CLASSIFICATIONS:
   - A. CLASS I, DIV I WITHIN A 5-FT RADIUS OF THE CARBON STORAGE TANK VENTS.
   - B. CLASS I, DIV II WITHIN A 10-FT RADIUS OF THE CARBON STORAGE TANK VENTS (FROM VENT ELEVATION TO GROUND).
   - C. CLASS I, DIV II FROM GROUND SURFACE TO 18-INCHES ABOVE GRADE WITHIN A 10-FT RADIUS OF THE TANK FOOTPRINT.
   - D. CLASS I, DIV II WITHIN THE CARBON AMENDMENT BUILDING WHERE DOSING LINES CONTAIN >10% EtOH, FIRE RATED WALLS MAY BE USED TO MINIMIZE THE FOOTPRINT OF THE CLASSIFIED AREA.
   - E. CLASS I, DIV II WITHIN A 10-FT RADIUS OF THE VENTS OF THE EQUIVALENT HAZ CLASS LOCATIONS WITHIN THE BUILDING.
2. CARBON AMENDMENT AND WELL MAINTENANCE BUILDING FOUNDATIONS INCLUDE A 6" CONCRETE CURB TO PROVIDE SECONDARY CONTAINMENT FOR PROCESSES WITHIN BUILDINGS.
3. ENTIRE NTH IRZ FACILITY WILL BE ENCLOSED WITHIN A SECURITY FENCE TO BE FULLY SHOWN IN LATER DRAWING SET REVISIONS.
4. SECURITY CAMERAS AND LIGHTING FIXTURES SHALL BE PROVIDED BY OTHERS.

0 20 40 60
SCALE: 1"=20'

- DRAFT -
NOT FOR CONSTRUCTION

ETIC ENGINEERING

ARCADIS

NO.	DATE	DESCRIPTION	GM/SPEC	DWN	CHKD	SUPV	APVD BY
0	04/05/13	INTERMEDIATE (60%) DESIGN SUBMITTAL		AJW	KLD	JPB	JEF

REVISIONS

APPROVED BY: JEF

SO	
SUPV	JPB
DSGN	KLD
DWN	AJW
CHKD	JPB
OK	JEF
DATE	04/05/13
SCALES	1" = 20'

TOPOCK GROUNDWATER REMEDIATION PROJECT

MW-20 BENCH YARD PIPING PLAN

GAS TRANSMISSION & DISTRIBUTION
PACIFIC GAS AND ELECTRIC COMPANY
SAN FRANCISCO, CALIFORNIA

MICROFILM
BILL OF MATL
DWG LIST
SUPSDS
SUPSD BY
SHEET NO. of SHEETS
C-06-03
REV

03/26/2013, 18:50, G:\Graphics\ARTOPOCK-01\Submittal-60%_March2013\HILL Formatted\C-06-01-02-03_MW20Bench.dwg, Tab: C-06-03_piping

N180B

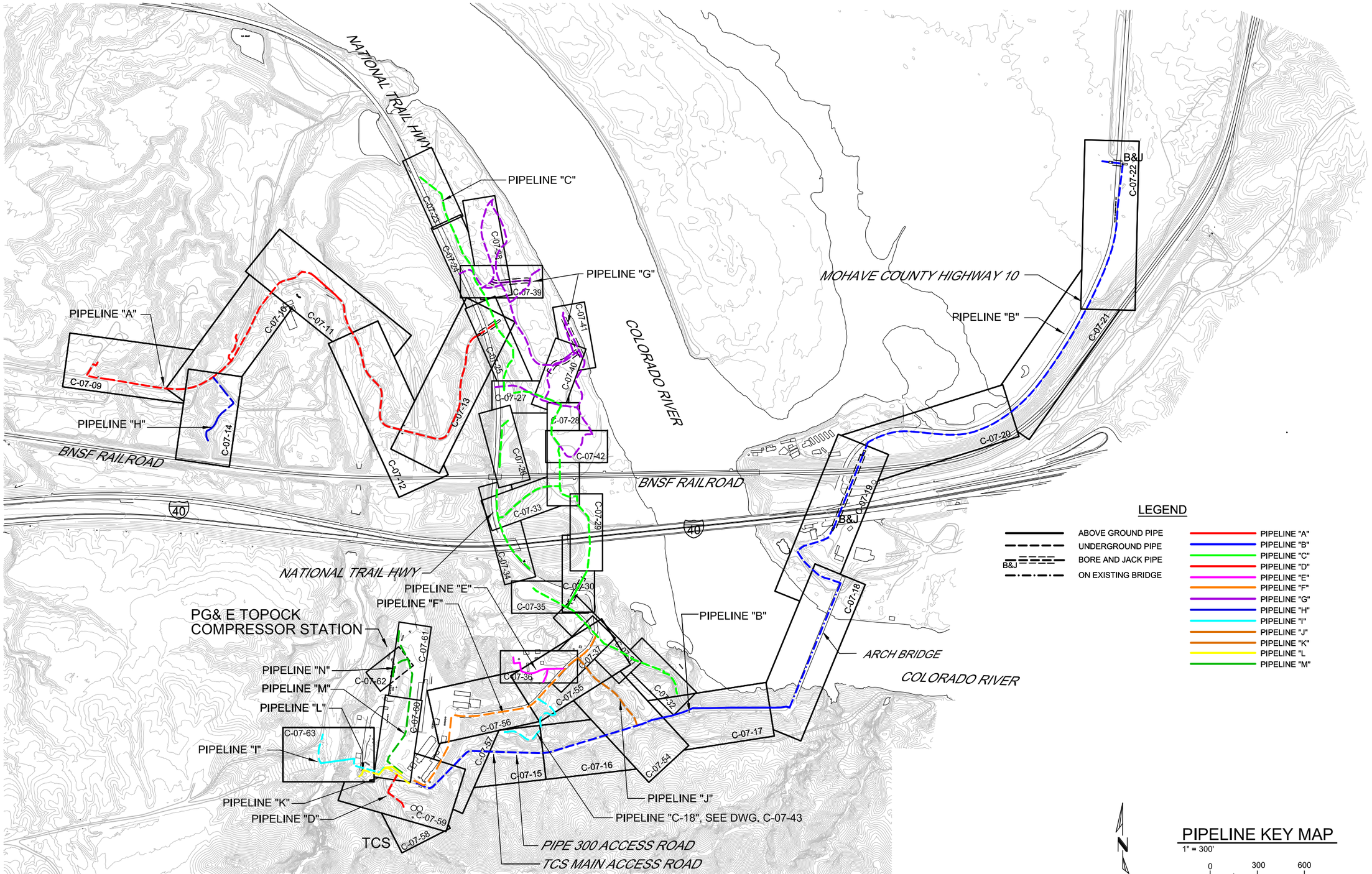

LEGEND

- ABOVE GROUND PIPE
- UNDERGROUND PIPE
- BORE AND JACK PIPE (B&J)
- ON EXISTING BRIDGE

- PIPELINE "A"
- PIPELINE "B"
- PIPELINE "C"
- PIPELINE "D"
- PIPELINE "E"
- PIPELINE "F"
- PIPELINE "G"
- PIPELINE "H"
- PIPELINE "I"
- PIPELINE "J"
- PIPELINE "K"
- PIPELINE "L"
- PIPELINE "M"

PIPELINE KEY MAP

1" = 300'

0 300 600

SCALE: 1"=300'

DRAFT
NOT FOR
CONSTRUCTION

E2 Consulting Engineers, Inc.
1900 Powell Street, Ste. 250
Emeryville, CA 94608
(510) 652-1164

CH2MHILL®

NO.	DATE	DESCRIPTION	GM/SPEC	DWN	CHKD	SUPV	APVD BY

REVISIONS

NO.	DATE	DESCRIPTION	GM/SPEC	DWN	CHKD	SUPV	APVD BY

REVISIONS

APPROVED BY	
SO	
SUPV	
DSGN	PT
DWN	PC
CHKD	PT
OK	PT
DATE	4/5/13
SCALES	

TOPOCK GROUNDWATER REMEDIATION PROJECT

PIPELINE KEY MAP

GAS TRANSMISSION & DISTRIBUTION
PACIFIC GAS AND ELECTRIC COMPANY
SAN FRANCISCO, CALIFORNIA

MICROFILM	
BILL OF MATL	
DWG LIST	
SUPSDS	
SUPSD BY	
SHEET NO. of SHEETS	
C-07-01	REV

PLOT DATE: $PLOTDATE PLOT TIME: $PLOTTIME

FILENAME: E2-C-XXX-0701.dwg

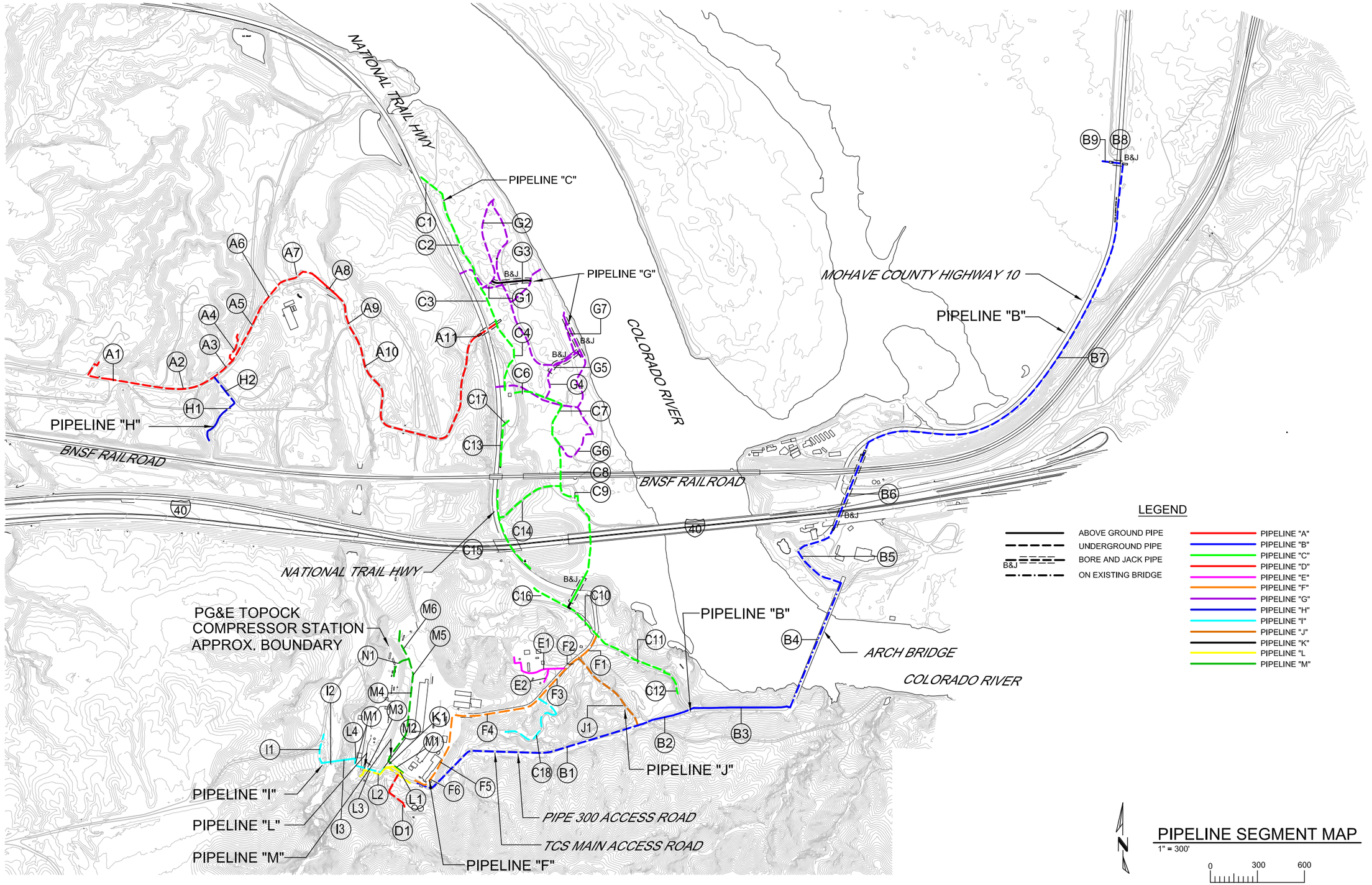

PIPELINE SEGMENT MAP

1" = 300'

0 300 600

SCALE: 1"=300'

DRAFT
NOT FOR
CONSTRUCTION

E2 Consulting Engineers, Inc.
1900 Powell Street, Ste. 250
Emeryville, CA 94608
(510) 652-1164

CH2MHILL®

NO.	DATE	DESCRIPTION	GM/SPEC	DWN	CHKD	SUPV	APVD BY
		REVISIONS					

NO.	DATE	DESCRIPTION	GM/SPEC	DWN	CHKD	SUPV	APVD BY
		REVISIONS					

APPROVED BY	
SO	
SUPV	
DSGN	PT
DWN	PC
CHKD	PT
OK	PT
DATE	4/5/13
SCALES	

TOPOCK GROUNDWATER REMEDIATION PROJECT

PIPELINE SEGMENT MAP

GAS TRANSMISSION & DISTRIBUTION
PACIFIC GAS AND ELECTRIC COMPANY
SAN FRANCISCO, CALIFORNIA

MICROFILM	
BILL OF MATL	
DWG LIST	
SUPSDS	
SUPSD BY	
SHEET NO. of SHEETS	
C-07-02	REV

FILENAME: E2-C-XXX-0702.dwg

PLOT DATE: $PLOTDATE PLOT TIME: $PLOTTIME

N1808

						Construction Method					Pipe Service (Diameter in inches)																					
Pipe Section No.	Plan and Profile Sht	Trench Section Sht/Detail	Beg Sta	End Sta	Total Length	UT	CT	AG	BJ	BA	FW	RW	TW	CA	EX	IRZ	ELECT 480V	ELECT 12kV	FO	PROV	SPARE W	SPARE FO	ACID	CAU	COAG	DR	SL	CW	WS	UA	FRW	SC	IA
A1	C-07-09	C-07-65/A1	12+31	18+61	630	630					6	6					2		2		6	2											
A2	C-07-09,10	C-07-65/A2	18+61	21+50	289		289				6	6					4		2			2											
A3	C-07-10	C-07-65/A3	21+50	23+06	156		156				2 - 6	6		6			2 - 2	4 (Encased)	4, 2 - 2			2											
A4	C-07-10	C-07-65/A4	23+06	26+91	385		385				2 - 6	6		6			2	4 (Encased)	4, 2			2											
A5	C-07-10	C-07-65/A5	26+91	28+41	150	150					2 - 6	6		6			2	4 (Encased)	4, 2		6	2											
A6	C-07-10,11	C-07-65/A6	28+41	31+39	298	298					2 - 6	8		6				4 (Encased)	4		8	4											
A7	C-07-11	C-07-67/A7	31+39	33+19	180					180	2 - 6	8		6				4	4														
A8	C-07-11	C-07-65/A8	33+19	35+51	232	232					2 - 6	8		6				4 (Encased)	4		8	4											
A9	C-07-11,12	C-07-66/A9	35+51	37+21	170		170				2 - 6	8		6				4 (Encased)	4			4											
A10	C-07-12,13	C-07-65/A10	37+21	53+68	1647	1647					2 - 6	8		6				4 (Encased)	4		8	4											
A11	C-07-13	C-07-43/A11	53+68	54+86	118				118		2 - 6	8		8				4 (Encased)	4		8	4											
B1	C-07-15,16	C-07-68/B1	4+77	21+07	1630	1487		143			12							Buried Cable															
B2	C-07-16, 17	C-07-66/B2	21+07	25+00	393	393					12																						
B3	C-07-17,18	C-07-67/B3	25+00	31+13	613			613			12																						
B4	C-07-18	C-07-67/B4	31+13	39+50	837					837	12																						
B5	C-07-19,20	C-07-66/B5	39+50	45+97	647	647					12																						
B6	C-07-19,20	C-07-66/B6	45+97	50+87	490				490		12																						
B7	C-07-20,21 & 22	C-07-66/B7	50+87	79+22	2835	2835					12																						
B8	C-07-22	C-07-66/B8	79+22	79+67	45				45		12																						
B9	C-07-22	C-07-66/B9	79+67	80+49	82	82					12																						
C1	C-07-23	C-07-73/C1	10+00	11+20	120	120									6		2 x 2		2		6												
C2	C-07-23,24	C-07-73/C2	11+20	18+74	754	754						2			6	4	4 x 2		2		6												
C3	C-07-24,25	C-07-73/C3	18+74	21+27	253	253						2			2 - 6	6	4 x 2	YES	2		6												
C4	C-07-25	C-07-73/C4	21+27	25+89	462	462					2 - 8	6, 2		8	2 - 6	6	4 x 2	YES	2		2 x 6												
C5	C-07-27	C-07-73/C5	26+00	28+16	216	216					2 - 8	6, 2	2	6	2-6, 4	6	2 x 3	YES	2	3x6"	3 x 6										6	10	
C6	C-07-27,28	C-07-73/C6	28+16	32+23	407	407					2 - 8	6, 2	2	6	2-4, 6	6	4 x 2	YES	2	3x6"	3 x 6										6	10	
C7	C-07-28	C-07-74/C7	32+23	34+87	264	264					2 - 8	6, 2	2	6	4, 6	6	4 x 2	YES	2	3x6"	3 x 6										6	10	
C8	C-07-28,29 & 30	C-07-74/C8	34+87	41+50	713	713					2 - 8	6, 2	2	6	4, 6	4	4 x 2	YES	2	3x6"	3 x 6										6	10	
C9	C-07-30,31	C-07-74/C9	41+50	44+00	200				200		2 - 8	6, 2	2	6	4, 6	4	4 x 2	YES	2	3x6"	3 x 6										6	10	
C10	C-07-31	C-07-74/C10	44+00	46+73	273	273					2 - 8	6	2	6	4		4 x 2	YES	2	3x6"	2 x 6										6		
C11	C-07-31,32	C-07-74/C11	46+73	51+15	442	442									2		4 x 2		2														
C12	C-07-32	C-07-74/C12	51+15	53+44	229			229							2		4 x 2		2														
C13	C-07-26	C-07-74/C13	10+25	12+70	245		245					2				6	4 x 2		2		4												
C14	C-07-33	C-07-75/C14	10+00	14+79	479	479						2			6	4	2 x 2		2		4												
C15	C-07-34	C-07-75/C15	10+00	12+00	200	200						2			6	4	4 x 2		2		4												
C16	C-07-34	C-07-75/C16	12+00	16+00	400	400						2			6	4	4 x 2		2		4												
C16	C-07-35	C-07-75/C16	10+00	12+50	250	250						2			6	4	4 x 2		2		4												
C17	C-07-26	C-07-75/C17	10+00	10+25	25		25					2			4	6					4												
C18	C-07-43	C-07-76/C18	10+00	16+00	400	400									2		2		2														
D1	C-07-64	C-07-68/D1	75+00	77+56	256	256							2				4		4							6							
E1	C-07-37	C-07-75/E1	10+00	14+43	443		443				3	2	2	3	2		8 x 2	YES	2														
F1	C-07-36	C-07-75/F1	10+00	11+85	185		185				2 - 8	6	2	6	2, 4		8 x 2	YES	2		2 x 6										6		
F2	C-07-36	C-07-75/F2	11+85	13+00	115		115				3	6	2	6	2, 4		8 x 2	YES	2		2 x 6										6		
F3	C-07-55,56	C-07-75/F3	13+00	20+95	795		795					8	2	3					4	2-6											6		
F4	C-07-56	C-07-69/F4	20+95	23+00	205	0	205					8	2	3					4	2-6											6	4	
F5	C-07-57	C-07-69/F5	23+00	23+75	75		75					8	2	3					4	2-6											6		
F6	C-07-57	C-07-69/F6	23+75	26+25	250		250					8	2	3				4	4								2				6		
G1	C-07-38	C-07-76/G1	10+00	10+85	85	85									6		2 x 3		2														
G2	C-07-38	C-07-76/G2	10+85	16+30	545	545									4		2 x 3		2														
G3	C-07-39	C-07-76/G3	10+00	12+60	260				260						4		2		2														
G3	C-07-41	C-07-76/G3	10+00	12+50	250				250								2																
G3	C-07-41	C-07-76/G3	12+50	13+00	50				50								2																
G4	C-07-40	C-07-76/G4	10+00	11+18	118	118									6		2 x 3		2														
G5	C-07-40	C-07-76/G5	11+18	14+16	298				298						4		2		2														
G6	C-07-42	C-07-76/G6	10+00	13+25	325	325									4		2 x 3		2														
H1	C-07-14	C-07-66/H1	10+00	14+09	409	409					6	6					3 - 2		2		6	2				4						10	
H2	C-07-14	C-07-66/H2	14+09	15+33	124	124					6	6		6			4		2		6	2											
I1	C-07-63	C-07-66/I1	8+00	10+00	200	200					2	4					4		2		4	2											
I2	C-07-63	C-07-67/I2	10+00	12+00	200					200	2	4					4		2														
I3	C-07-63	C-07-66/I3	12+00	12+85	85	85					2	4					4		2		4	2											
J1	C-07-54	C-07-68/J1	10+00	15+83	583	583					2 - 8							Buried Cable															
K1	C-07-58	C-07-72/K1	90+00	91+04	104		104				4	4	2				4		4	2 - 2						6			2				
L1	C-07-69	C-07-71/L1	80+00	80+75	75		75				2 - 6		2 - 2				4		4				2	2									2
L2	C-07-59	C-07-71/L2	80+75	81+31	56		56				6		2 - 2				4		4				2	2		6			2				2
L3	C-07-59	C-07-71/L3	81+31	83+67	236		236				3	4	2 - 2				4		4				2	2					2				2
L4	C-07-59	C-07-72/L4	83+67	84+36	69		69				3	4					4		4				2										
M1	C-07-60	C-07-70/M1	59+27	59+75	48		48				2	8, 2 - 2	2	3			4		4	2 - 3			2	2	2	6	2	3	2	2	6		2
M2	C-07-60	C-07-70/M2	59+75	61+35	160		160					8	2	3			4		4	2 - 3						6			2				
M3	C-07-60	C-07-70/M3	61+35	62+05	70		70				4	3	2	3			4		4	2 - 3									2				
M4	C-07-60,61	C-07-70/M4	62+05	67+02	497		497				4	3		3			4		4	2 - 3													
M5	C-07-61	C-07-71/M5	67+02	68+15	113		113				4	3		3			4		4													4	
M6	C-07-61	C-07-70/M6	68+15	70+10	195		195				4	3		3			4		4														
N1	C-07-62	C-07-72/N1	85+00	86+38	138	138					4	3		3			4		4													4	
				Totals	25,776	16,902	4,961	985	1,711	1,217	25,021	16,470	5,056	9,284	11,899	4,868	36,965	9,330	18,143	10,127	14,089	4,893	484	415	48	1,033	48	298	674	48	3,746	2,665	415
														9284																				

UT - Underground Trench; CT - Concrete Trench; AG - Above Ground Piping; BJ - Bore and Jack; BA - Bridge Attachment; FW - Freshwater; RW - Remedy Wastewater (force main); TW - Treated Water; CA - Carbon Amended Water (FW, TW or EX treated with carbon); DR - Drain

EX - Extracted water (from wells); IRZ - Insitu reactive zone (water recirculated from IRZ wells); ELECT 480V - Three phase power and distribution; ELECT 12kV - Electrical power and transmission conduit; FO - Fiber Optic; PROV - Provisional for future wells;

Spare W - Spare water lines; Spare FO - Spare fiber optic; ACID - Acid; CAU - Caustic; COAG - Coagulant; DR - Drain; SL - Slurry; CW - Chilled Water; WS - Wastewater; UA - Utility Air; FRW - Fire water suppression; IA - Instrument air; SC - Secondary Containment

DRAFT NOT FOR CONSTRUCTION

E2 Consulting Engineers, Inc.
1900 Powell Street, Ste. 250
Emeryville, CA 94608
(510) 652-1164

CH2MHILL®

NO.	DATE	DESCRIPTION	GM/SPEC	DWN	CHKD	SUPV	APVD BY	NO.	DATE	DESCRIPTION	GM/SPEC	DWN	CHKD	SUPV	APVD BY
		REVISIONS								REVISIONS					

APPROVED BY: SO; SUPV; DSGN PT; DWN PC; CHKD PT; OK PT; DATE 4/5/13; SCALES N/A

TOPOCK GROUNDWATER REMEDIATION PROJECT

PIPE SCHEDULE

GAS TRANSMISSION & DISTRIBUTION
PACIFIC GAS AND ELECTRIC COMPANY
SAN FRANCISCO, CALIFORNIA

MICROFILM
BILL OF MATL
DWG LIST
SUPSDS
SUPSD BY
SHEET NO. of SHEETS
C-07-03
REV

FILENAME: E2-C-XXX-0703AD.DWG
PLOT DATE: 2013\04\05 PLOT TIME: 3:01:19 PM

N1808

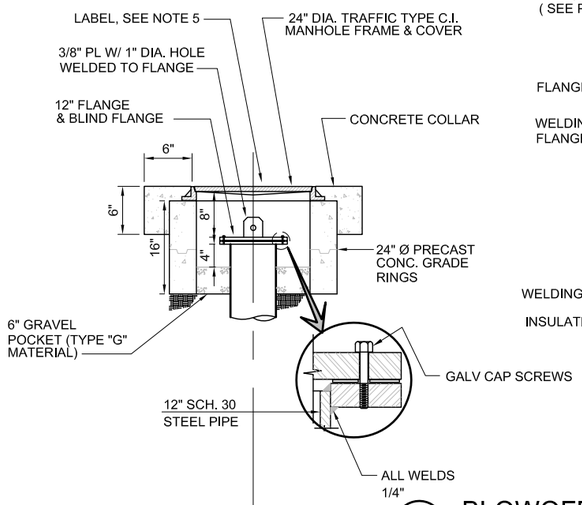

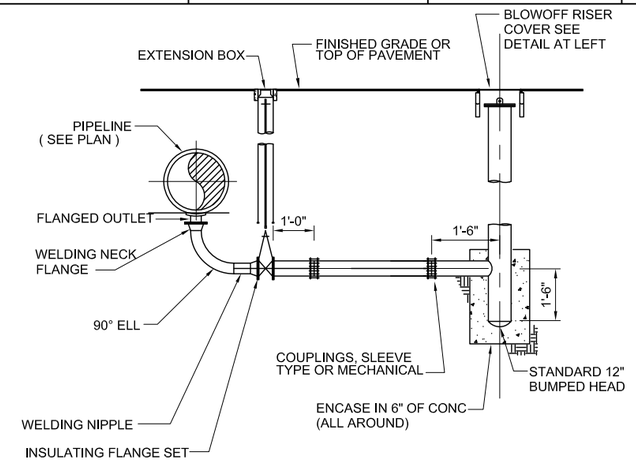

NOTES:

1. FLANGE AND BLIND FLANGE SAME PRESSURE CLASS AS PIPELINE.
2. CEMENT 1/16" THICK FULL COVER GASKET TO FLANGE.
3. ALL FERROUS SURFACES OF BURIED PIPE & APPURTENENCES TO BE PROVIDED WITH PROTECTIVE COATINGS PER SPECIFICATIONS.
4. FOR BLOWOFF LATERAL SIZE, SEE PLAN AND PROFILE.

1 BLOWOFF DETAILS

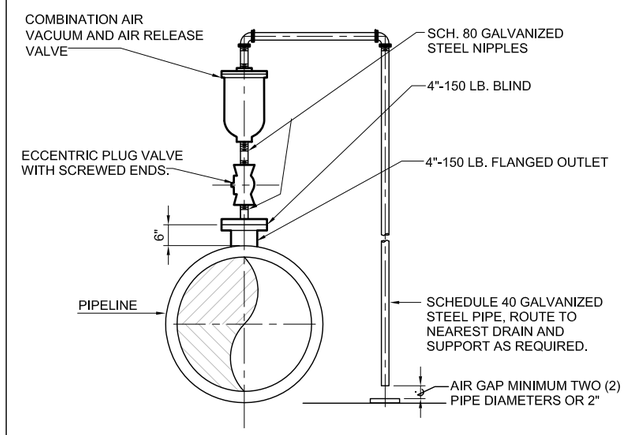

NOTES:
FOR PIPELINE WORKING PRESSURE OF MORE THAN 150 PSI FLANGED OUTLET AND ECCENTRIC PLUG VALVE SHALL BE DESIGNED FOR THE HIGHER PRESSURE.

3 AIR-VACUUM AND AIR-RELEASE VALVE

ASSEMBLY 3' AND SMALLER

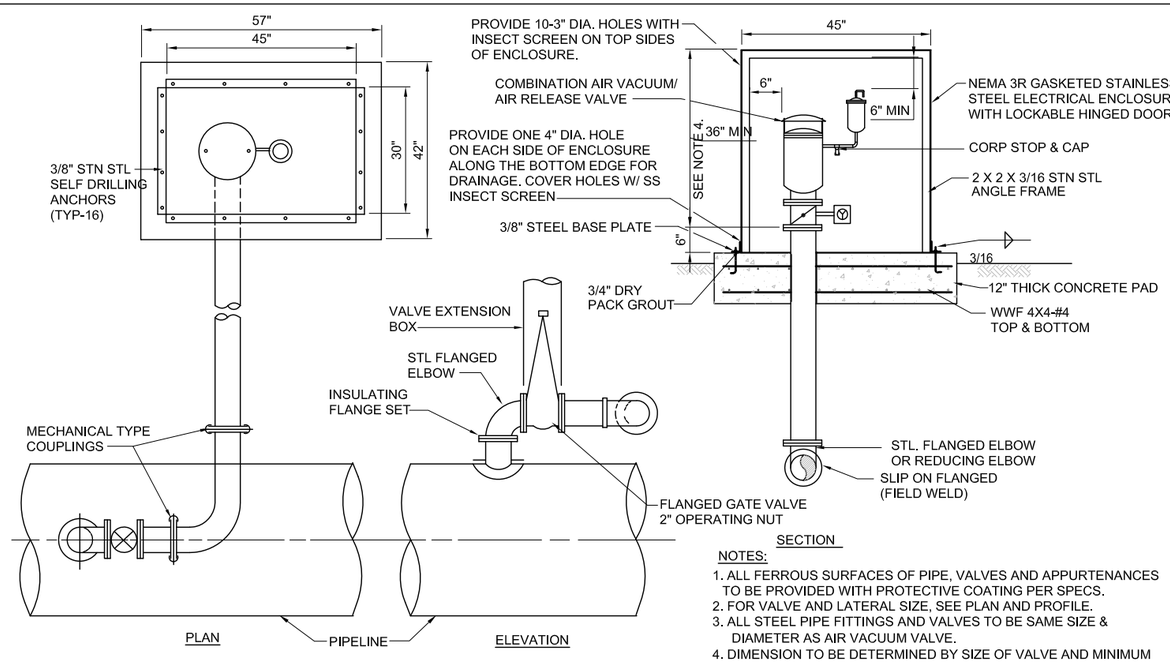

NOTES:

1. ALL FERROUS SURFACES OF PIPE, VALVES AND APPURTENANCES TO BE PROVIDED WITH PROTECTIVE COATING PER SPECS.
2. FOR VALVE AND LATERAL SIZE, SEE PLAN AND PROFILE.
3. ALL STEEL PIPE FITTINGS AND VALVES TO BE SAME SIZE & DIAMETER AS AIR VACUUM VALVE.
4. DIMENSION TO BE DETERMINED BY SIZE OF VALVE AND MINIMUM CLEARANCES.

2 COMBINATION AIR VACUUM AND AIR RELEASE VALVE ASSEMBLY

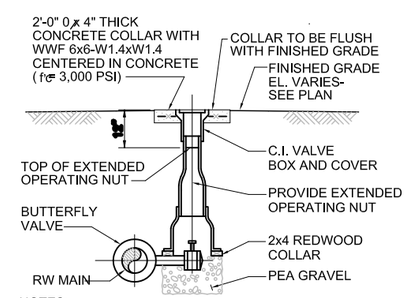

NOTES:

1. FOR SIZE AND CLASS OF VALVE AND PIPE, SEE PLANS. COORDINATE PIPE FLANGE TYPE WITH REQUIRED VALVE CLASS.
2. FOR BURIED GATE VALVE, MOUNT VALVE BOX IN SIMILAR MANNER DIRECTLY OVER TOP OF MAIN.

4 BURIED VALVE DETAIL

DRAFT NOT FOR CONSTRUCTION

E2 Consulting Engineers, Inc.
1900 Powell Street, Ste. 250
Emeryville, CA 94608
(510) 652-1164

CH2MHILL®

NO.	DATE	DESCRIPTION	GM/SPEC	DWN	CHKD	SUPV	APVD BY

REVISIONS

NO.	DATE	DESCRIPTION	GM/SPEC	DWN	CHKD	SUPV	APVD BY

REVISIONS

APPROVED BY	
SO	
SUPV	
DSGN	PT
DWN	PC
CHKD	PT
OK	PT
DATE	4/5/13
SCALES	NTS

TOPOCK GROUNDWATER REMEDIATION PROJECT
VALVE DETAILS
GAS TRANSMISSION & DISTRIBUTION
PACIFIC GAS AND ELECTRIC COMPANY
SAN FRANCISCO, CALIFORNIA

MICROFILM	
BILL OF MATL	
DWG LIST	
SUPSDS	
SUPSD BY	
SHEET NO. of SHEETS	
C-07-07	REV

FILENAME: E2-C-XXX-0707ad.dwg
PLOT DATE: $PLOTDATE PLOT TIME: $PLOTTIME

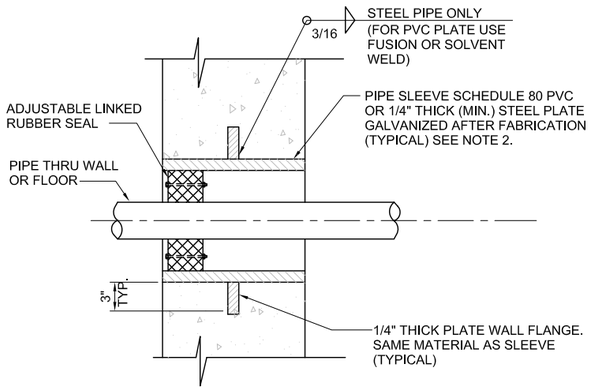

NOTES:

1. THESE SLEEVED PIPE DETAILS ARE TO BE USED IN DRY WALLS ONLY.
2. ELIMINATE SLEEVE IN CORE DRILLED WALLS.

1 SLEEVED PENETRATION DETAIL

NTS

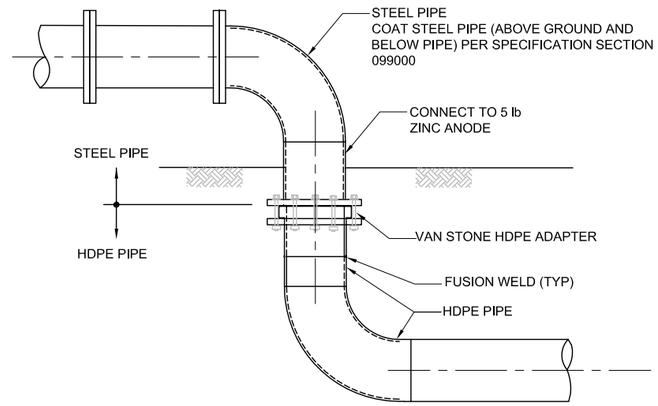

3 STEEL TO HDPE PIPE ADAPTER DETAIL

NTS

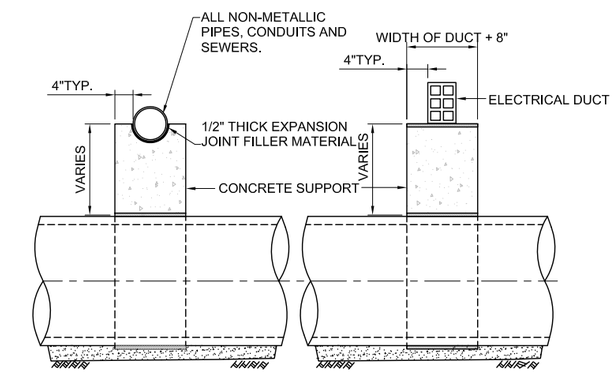

NOTE:
BACKFILL TO BE BROUGHT UP UNIFORMLY ON BOTH SIDES OF CONC. SUPPORT.

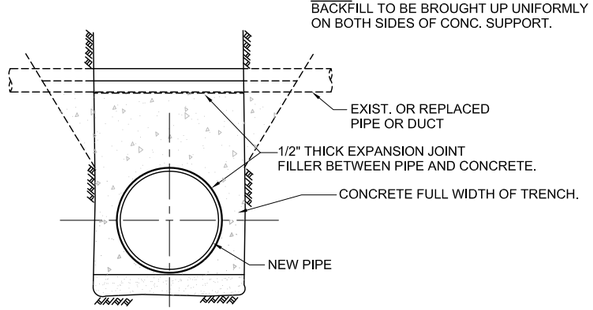

2 UNDERGROUND UTILITY SUPPORT DETAIL

NTS

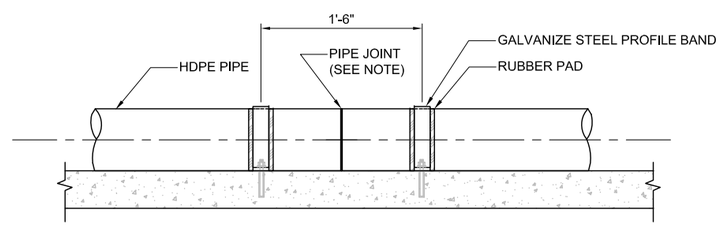

NOTE:

1. PROVIDE ANCHORS AT PIPE JOINTS AT 200 FEET MAXIMUM SPACING AND WHERE SHOWN ON PLAN.

4 HDPE PIPE ANCHORS DETAIL

NTS

DRAFT
NOT FOR
CONSTRUCTION

E2 Consulting Engineers, Inc.
1900 Powell Street, Ste. 250
Emeryville, CA 94608
(510) 652-1164

CH2MHILL®

NO.	DATE	DESCRIPTION	GM/SPEC	DWN	CHKD	SUPV	APVD BY
		REVISIONS					

NO.	DATE	DESCRIPTION	GM/SPEC	DWN	CHKD	SUPV	APVD BY
		REVISIONS					

APPROVED BY
SO
SUPV
DSGN PT
DWN PC
CHKD PT
OK PT
DATE 4/5/13
SCALES NTS

TOPOCK GROUNDWATER REMEDIATION PROJECT
PIPING DETAILS

GAS TRANSMISSION & DISTRIBUTION
PACIFIC GAS AND ELECTRIC COMPANY
SAN FRANCISCO, CALIFORNIA

MICROFILM
BILL OF MATL
DWG LIST
SUPSDS
SUPSD BY
SHEET NO. of SHEETS
C-07-08
REV

FILENAME: E2-C-XXX-0708AD.dwg
PLOT DATE: $PLOTDATE PLOT TIME: $PLOTTIME

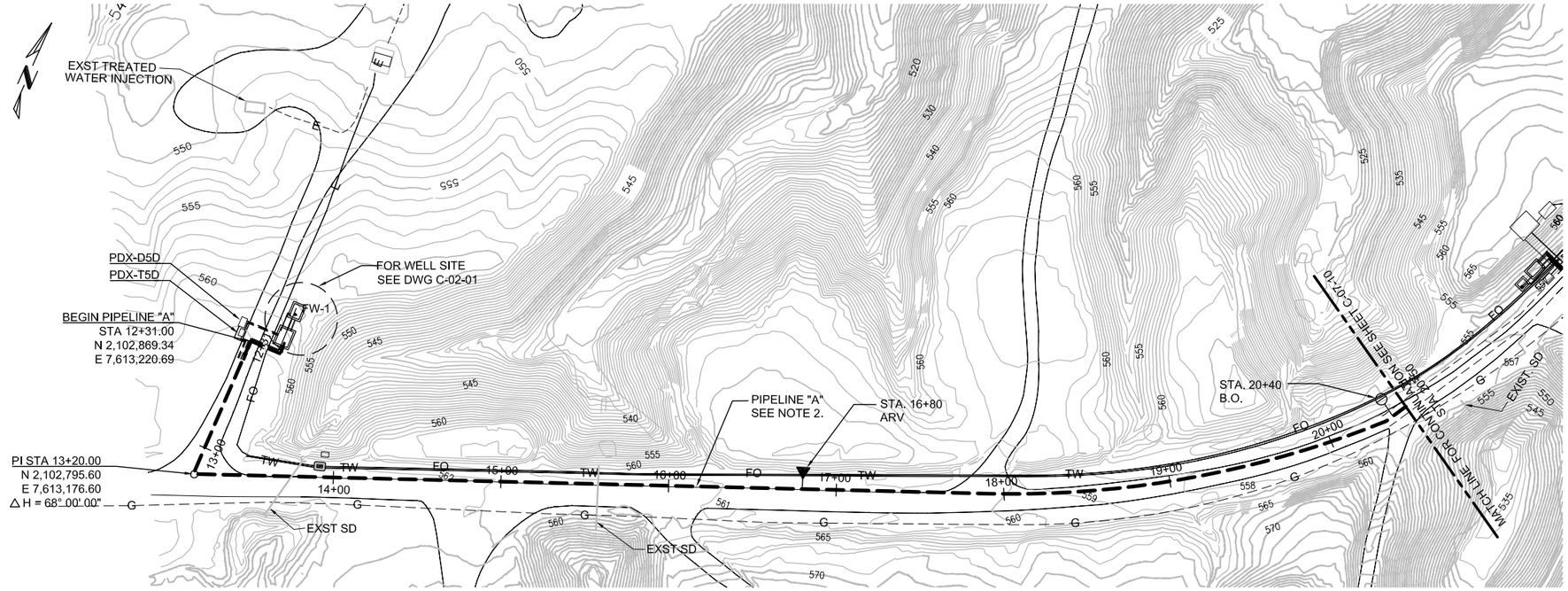

PIPELINE "A" - PLAN

(SCALE: 1" = 40' H)

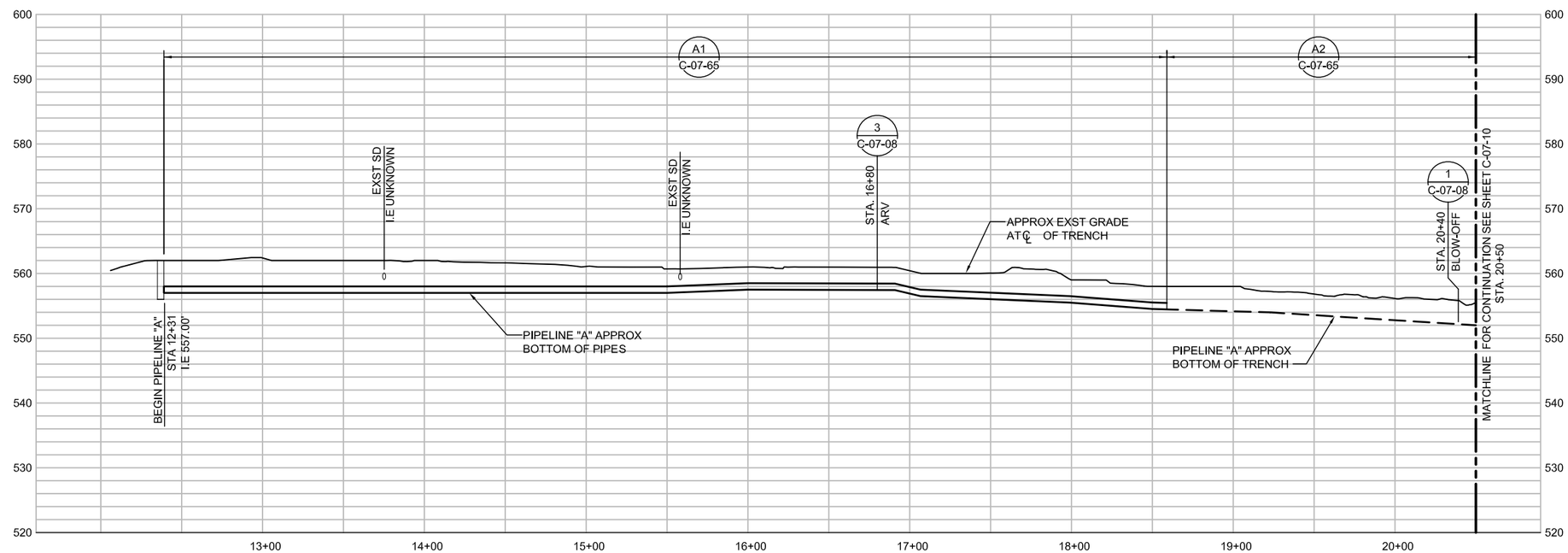

PIPELINE "A" - PROFILE

(SCALE: 1" = 40' H; 1" = 10' V)

NOTES:

1. DEPTHS OF EXISTING UTILITIES ARE UNKNOWN. ALL POTENTIAL CONFLICTS BETWEEN NEW PIPE CONSTRUCTION AND EXISTING UTILITIES WILL BE POTHOLED PRIOR TO THE 100% DESIGN. A DETERMINATION WILL BE MADE WHETHER TO RELOCATE EXISTING UTILITIES OR RE-ROUTE NEW PIPE TRENCHES AROUND EXISTING UTILITIES. THIS WILL BE INCORPORATED INTO THE 100% DESIGN.
2. THE NEW PIPELINE ALIGNMENT SHOWS CENTER OF TRENCH. THE NUMBER AND SIZES OF PIPE IN EACH TRENCH VARIES. REFER TO PIPE SECTION NUMBER ON EACH PLAN AND PROFILE SHEET AND PIPE SCHEDULE ON DRAWING C-07-03 FOR NUMBER AND SIZE OF EACH PIPE. REFER TO TRENCH DETAILS ON DRAWINGS C-07-65, C-07-66 AND C-07-67 FOR ARRANGEMENT OF PIPING IN EACH TRENCH SECTION.

HORZ: SCALE: 1"=40

VERT: SCALE: 1"=10'

DRAFT NOT FOR CONSTRUCTION

E2 Consulting Engineers, Inc.
1900 Powell Street, Ste. 250
Emeryville, CA 94608
(510) 652-1164

CH2MHILL®

NO.	DATE	DESCRIPTION	GM/SPEC	DWN	CHKD	SUPV	APVD BY
		REVISIONS					

NO.	DATE	DESCRIPTION	GM/SPEC	DWN	CHKD	SUPV	APVD BY
		REVISIONS					

APPROVED BY
SO
SUPV
DSGN PT
DWN PC/EE
CHKD PT
OK PT
DATE 4/5/13
SCALES

TOPOCK GROUNDWATER REMEDIATION PROJECT
PIPELINE - PLAN AND PROFILE
STA 12+31 TO STA 20+50
PIPELINE "A"
GAS TRANSMISSION & DISTRIBUTION
PACIFIC GAS AND ELECTRIC COMPANY
SAN FRANCISCO, CALIFORNIA

MICROFILM
BILL OF MATL
DWG LIST
SUPSDS
SUPSD BY
SHEET NO. of SHEETS
C-07-09
REV

FILENAME: E2-C-XXX-0709AD.dwg
PLOT DATE: $PLOTDATE PLOT TIME: $PLOTTIME

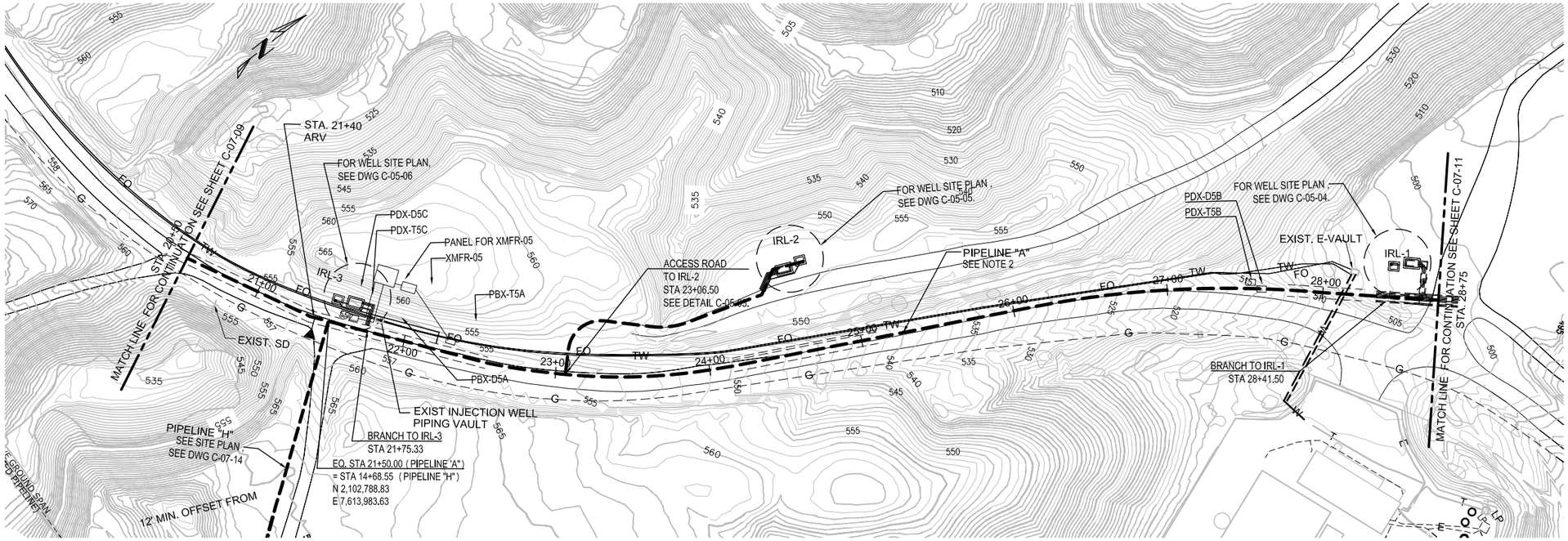

PIPELINE "A" - PLAN

(SCALE: 1" = 40' H)

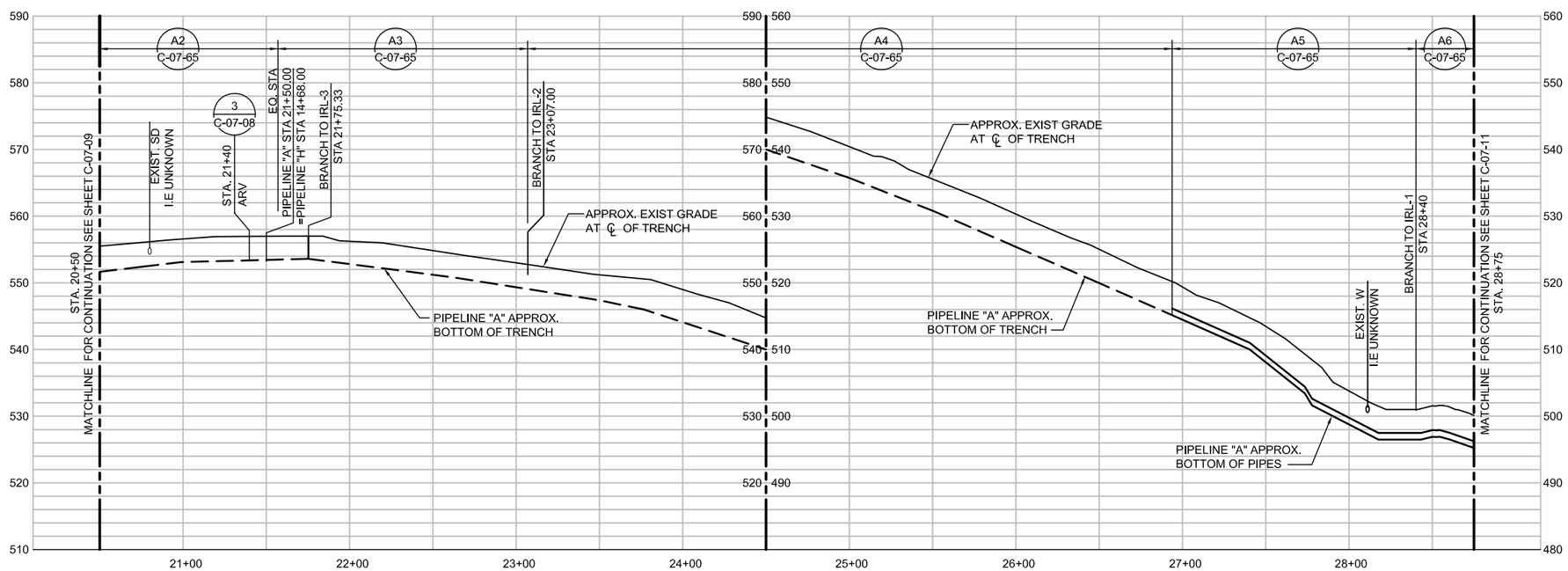

PIPELINE "A" - PROFILE

(SCALE: 1" = 40' H; 1" = 10' V)

HORZ: SCALE: 1"=40'

VERT: SCALE: 1"=10'

NOTES:

1. DEPTHS OF EXISTING UTILITIES ARE UNKNOWN. ALL POTENTIAL CONFLICTS BETWEEN NEW PIPE CONSTRUCTION AND EXISTING UTILITIES WILL BE POTHOLED PRIOR TO THE 100% DESIGN. A DETERMINATION WILL BE MADE WHETHER TO RELOCATE EXISTING UTILITIES OR RE-ROUTE NEW PIPE TRENCHES AROUND EXISTING UTILITIES. THIS WILL BE INCORPORATED INTO THE 100% DESIGN.
2. THE NEW PIPELINE ALIGNMENT SHOWS CENTER OF TRENCH. THE NUMBER AND SIZES OF PIPE IN EACH TRENCH VARIES. REFER TO PIPE SECTION NUMBER ON EACH PLAN AND PROFILE SHEET AND PIPE SCHEDULE ON DRAWING C-07-03 FOR NUMBER AND SIZE OF EACH PIPE. REFER TO TRENCH DETAILS ON DRAWINGS C-07-65, C-07-66 AND C-07-67 FOR ARRANGEMENT OF PIPING IN EACH TRENCH SECTION.

DRAFT
NOT FOR
CONSTRUCTION

E2 Consulting Engineers, Inc.
1900 Powell Street, Ste. 250
Emeryville, CA 94608
(510) 652-1164

CH2MHILL®

NO.	DATE	DESCRIPTION	GM/SPEC	DWN	CHKD	SUPV	APVD BY
		REVISIONS					

NO.	DATE	DESCRIPTION	GM/SPEC	DWN	CHKD	SUPV	APVD BY
		REVISIONS					

APPROVED BY
SO
SUPV
DSGN PT
DWN PC/EE
CHKD PT
OK PT
DATE 4/5/13
SCALES

TOPOCK GROUNDWATER REMEDIATION PROJECT
PIPELINE - PLAN AND PROFILE
STA 20+50 TO STA 28+75
PIPELINE "A"
GAS TRANSMISSION & DISTRIBUTION
PACIFIC GAS AND ELECTRIC COMPANY
SAN FRANCISCO, CALIFORNIA

MICROFILM
BILL OF MATL
DWG LIST
SUPSDS
SUPSD BY
SHEET NO. of SHEETS
C-07-10
REV

PLOT DATE: $PLOTDATE PLOT TIME: $PLOTTIME
FILENAME: E2-C-XXX-07710AD.dwg

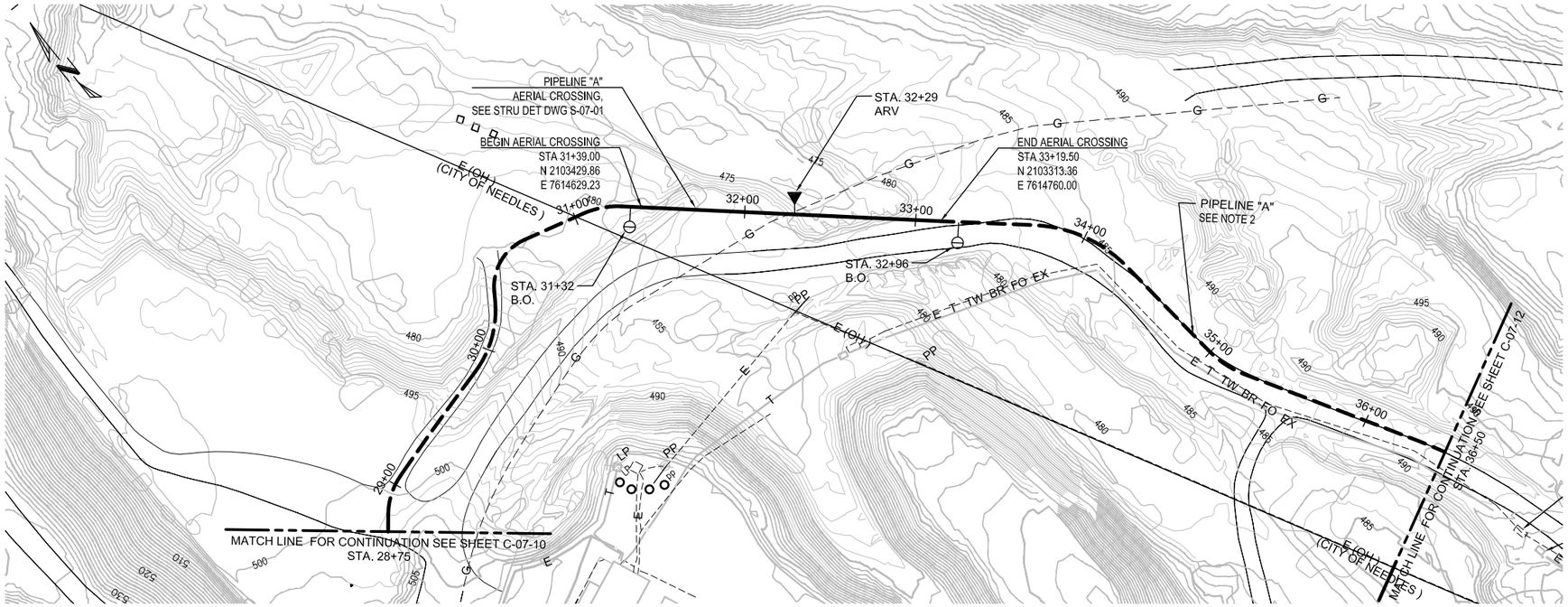

PIPELINE "A" - PLAN

(SCALE: 1" = 40' H)

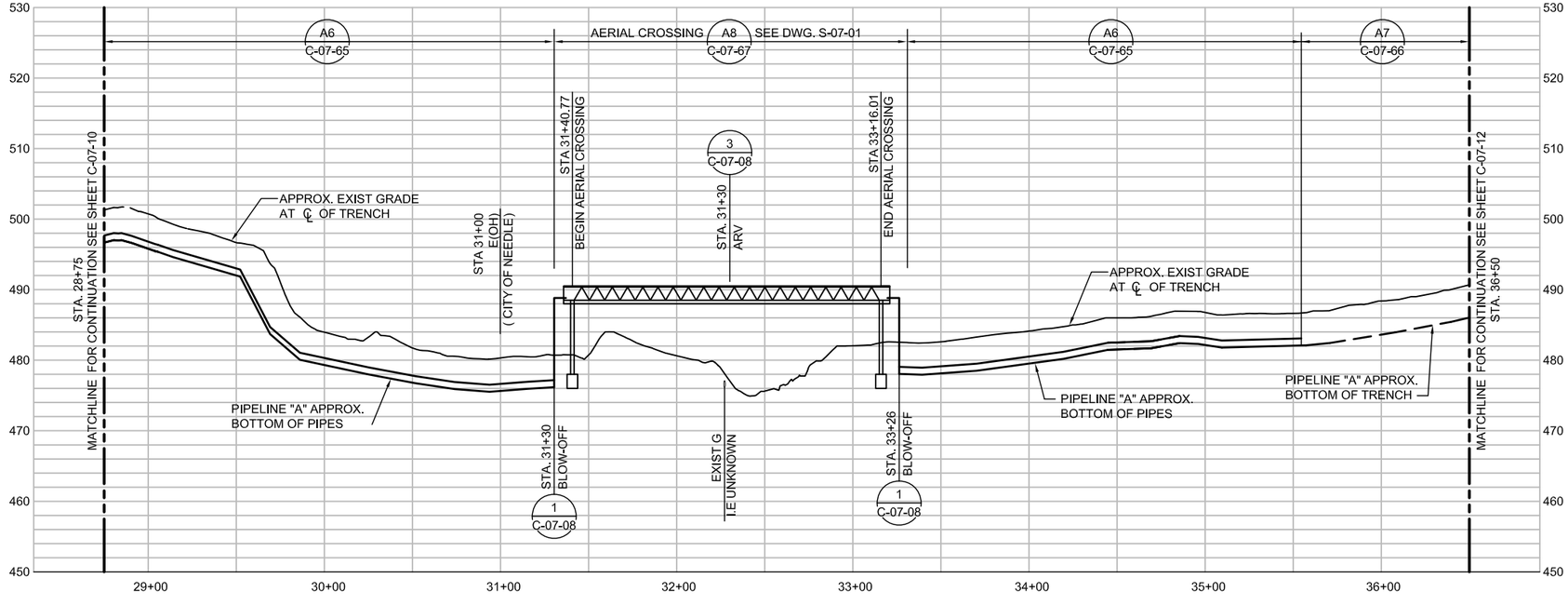

PIPELINE "A" - PROFILE

(SCALE: 1" = 40' H; 1" = 10' V)

HORZ: SCALE: 1"=40'

VERT: SCALE: 1"=10'

NOTES:

1. DEPTHS OF EXISTING UTILITIES ARE UNKNOWN. ALL POTENTIAL CONFLICTS BETWEEN NEW PIPE CONSTRUCTION AND EXISTING UTILITIES WILL BE POTHOLED PRIOR TO THE 100% DESIGN. A DETERMINATION WILL BE MADE WHETHER TO RELOCATE EXISTING UTILITIES OR RE-ROUTE NEW PIPE TRENCHES AROUND EXISTING UTILITIES. THIS WILL BE INCORPORATED INTO THE 100% DESIGN.
2. THE NEW PIPELINE ALIGNMENT SHOWS CENTER OF TRENCH. THE NUMBER AND SIZES OF PIPE IN EACH TRENCH VARIES. REFER TO PIPE SECTION NUMBER ON EACH PLAN AND PROFILE SHEET AND PIPE SCHEDULE ON DRAWING C-07-03 FOR NUMBER AND SIZE OF EACH PIPE. REFER TO TRENCH DETAILS ON DRAWINGS C-07-65, C-07-66 AND C-07-67 FOR ARRANGEMENT OF PIPING IN EACH TRENCH SECTION.

DRAFT
NOT FOR
CONSTRUCTION

E2 Consulting Engineers, Inc.
1900 Powell Street, Ste. 250
Emeryville, CA 94608
(510) 652-1164

CH2MHILL®

NO.	DATE	DESCRIPTION	GM/SPEC	DWN	CHKD	SUPV	APVD BY
		REVISIONS					

NO.	DATE	DESCRIPTION	GM/SPEC	DWN	CHKD	SUPV	APVD BY
		REVISIONS					

APPROVED BY
SO
SUPV
DSGN PT
DWN PC/EE
CHKD PT
OK PT
DATE 4/5/13
SCALES

TOPOCK GROUNDWATER REMEDIATION PROJECT
PIPELINE - PLAN AND PROFILE
STA 28+75 TO STA 36+50
PIPELINE "A"
GAS TRANSMISSION & DISTRIBUTION
PACIFIC GAS AND ELECTRIC COMPANY
SAN FRANCISCO, CALIFORNIA

MICROFILM
BILL OF MATL
DWG LIST
SUPSDS
SUPSD BY
SHEET NO. of SHEETS
C-07-11
REV

FILENAME: E2-C-XXX-0711AD.dwg
PLOT DATE: $PLOTDATE PLOT TIME: $PLOTTIME

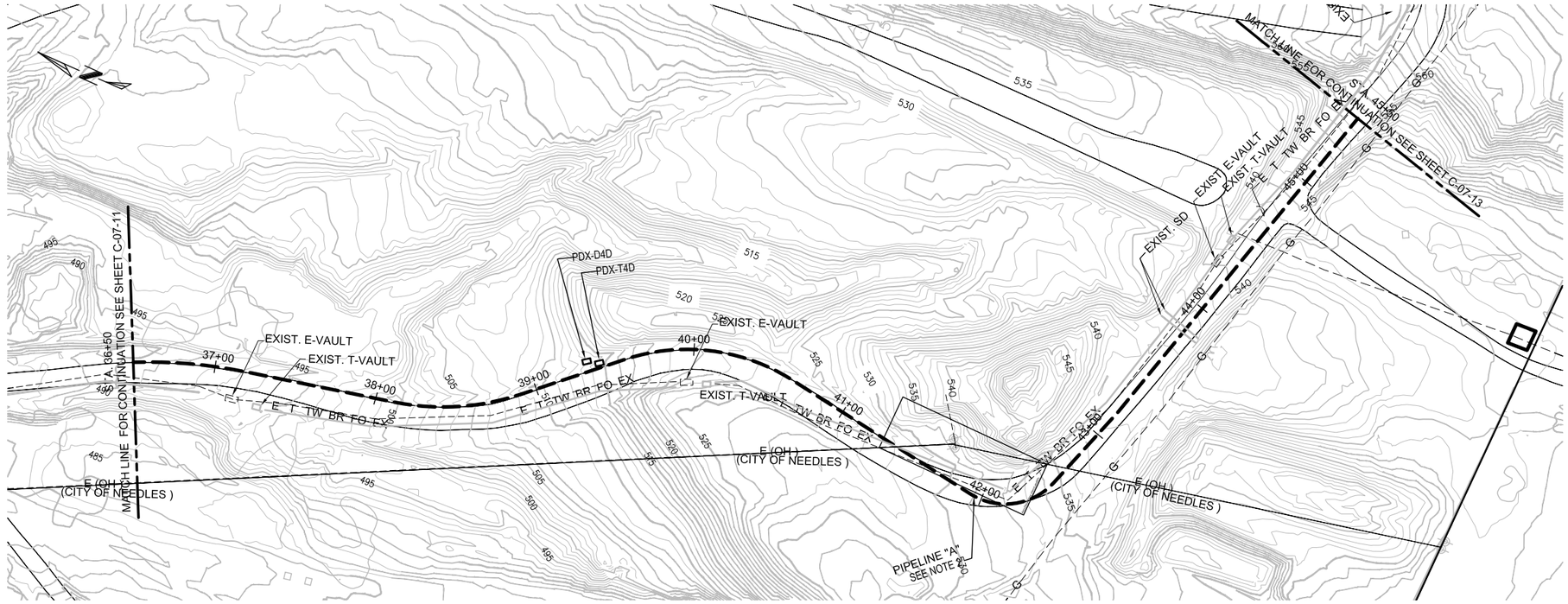

PIPELINE "A" - PLAN

(SCALE: 1" = 40' H)

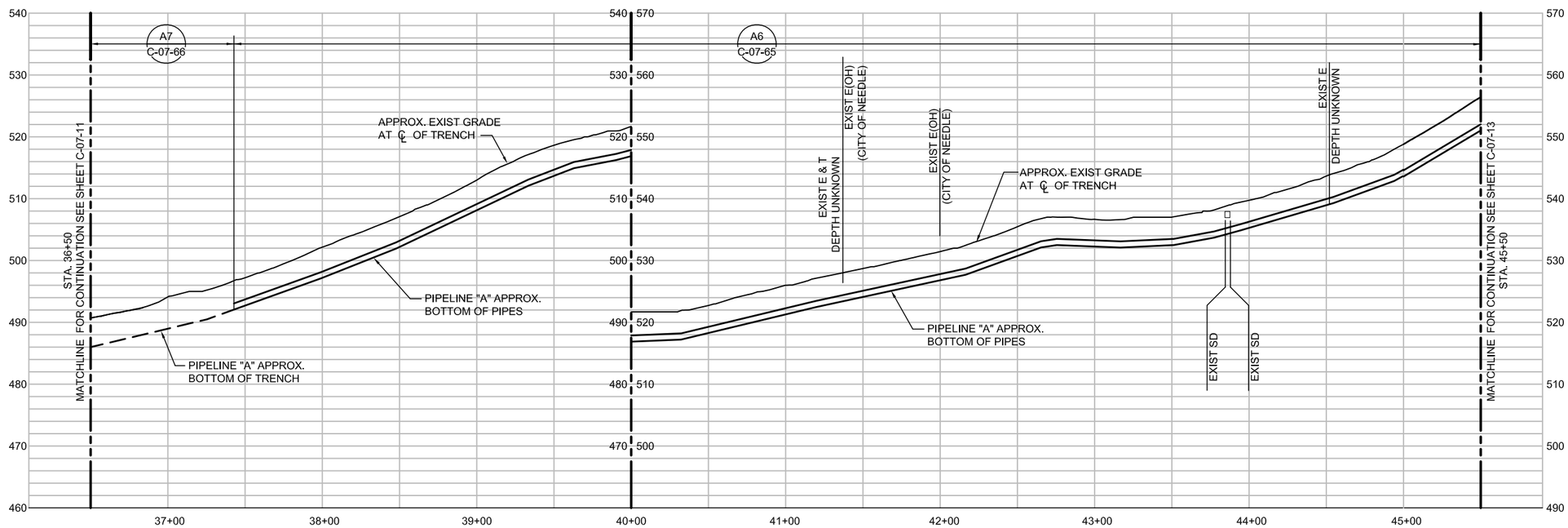

PIPELINE "A" - PROFILE

(SCALE: 1" = 40' H; 1" = 10' V)

NOTES:

1. DEPTHS OF EXISTING UTILITIES ARE UNKNOWN. ALL POTENTIAL CONFLICTS BETWEEN NEW PIPE CONSTRUCTION AND EXISTING UTILITIES WILL BE POTHOLED PRIOR TO THE 100% DESIGN. A DETERMINATION WILL BE MADE WHETHER TO RELOCATE EXISTING UTILITIES OR RE-ROUTE NEW PIPE TRENCHES AROUND EXISTING UTILITIES. THIS WILL BE INCORPORATED INTO THE 100% DESIGN.
2. THE NEW PIPELINE ALIGNMENT SHOWS CENTER OF TRENCH. THE NUMBER AND SIZES OF PIPE IN EACH TRENCH VARIES. REFER TO PIPE SECTION NUMBER ON EACH PLAN AND PROFILE SHEET AND PIPE SCHEDULE ON DRAWING C-07-03 FOR NUMBER AND SIZE OF EACH PIPE. REFER TO TRENCH DETAILS ON DRAWINGS C-07-65, C-07-66 AND C-07-67 FOR ARRANGEMENT OF PIPING IN EACH TRENCH SECTION.

0 40 80 120
HORZ: SCALE: 1"=40'

0 10 20 30
VERT: SCALE: 1"=10'

DRAFT
NOT FOR
CONSTRUCTION

E2 Consulting Engineers, Inc.
1900 Powell Street, Ste. 250
Emeryville, CA 94608
(510) 652-1164

CH2MHILL®

NO.	DATE	DESCRIPTION	GM/SPEC	DWN	CHKD	SUPV	APVD BY

REVISIONS

NO.	DATE	DESCRIPTION	GM/SPEC	DWN	CHKD	SUPV	APVD BY

REVISIONS

APPROVED BY	
SO	
SUPV	
DSGN	PT
DWN	PC/EE
CHKD	PT
OK	PT
DATE	4/5/13
SCALES	

TOPOCK GROUNDWATER REMEDIATION PROJECT
PIPELINE - PLAN AND PROFILE
STA 36+50 TO STA 45+00
PIPELINE "A"
GAS TRANSMISSION & DISTRIBUTION
PACIFIC GAS AND ELECTRIC COMPANY
SAN FRANCISCO, CALIFORNIA

MICROFILM	
BILL OF MATL	
DWG LIST	
SUPSDS	
SUPSD BY	
SHEET NO. of SHEETS	REV
C-07-12	

FILENAME: E2-C-XXX-0712AD.dwg
PLOT DATE: $PLOTDATE PLOT TIME: $PLOTTIME

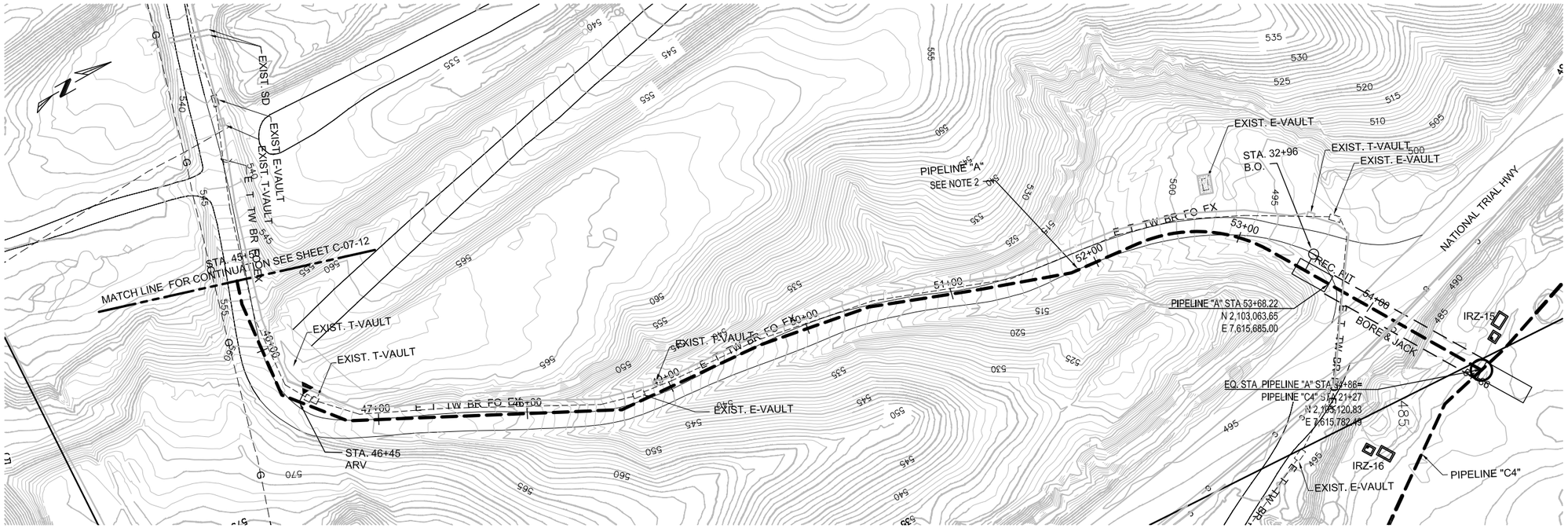

PIPELINE "A" - PLAN

(SCALE: 1" = 40' H)

NOTES:

1. DEPTHS OF EXISTING UTILITIES ARE UNKNOWN. ALL POTENTIAL CONFLICTS BETWEEN NEW PIPE CONSTRUCTION AND EXISTING UTILITIES WILL BE POTHOLED PRIOR TO THE 100% DESIGN. A DETERMINATION WILL BE MADE WHETHER TO RELOCATE EXISTING UTILITIES OR RE-ROUTE NEW PIPE TRENCHES AROUND EXISTING UTILITIES. THIS WILL BE INCORPORATED INTO THE 100% DESIGN.
2. THE NEW PIPELINE ALIGNMENT SHOWS CENTER OF TRENCH. THE NUMBER AND SIZES OF PIPE IN EACH TRENCH VARIES. REFER TO PIPE SECTION NUMBER ON EACH PLAN AND PROFILE SHEET AND PIPE SCHEDULE ON DRAWING C-07-03 FOR NUMBER AND SIZE OF EACH PIPE. REFER TO TRENCH DETAILS ON DRAWINGS C-07-65, C-07-66 AND C-07-67 FOR ARRANGEMENT OF PIPING IN EACH TRENCH SECTION.

0 40 80 120
HORZ: SCALE: 1"=40'

0 10 20 30
VERT: SCALE: 1"=10'

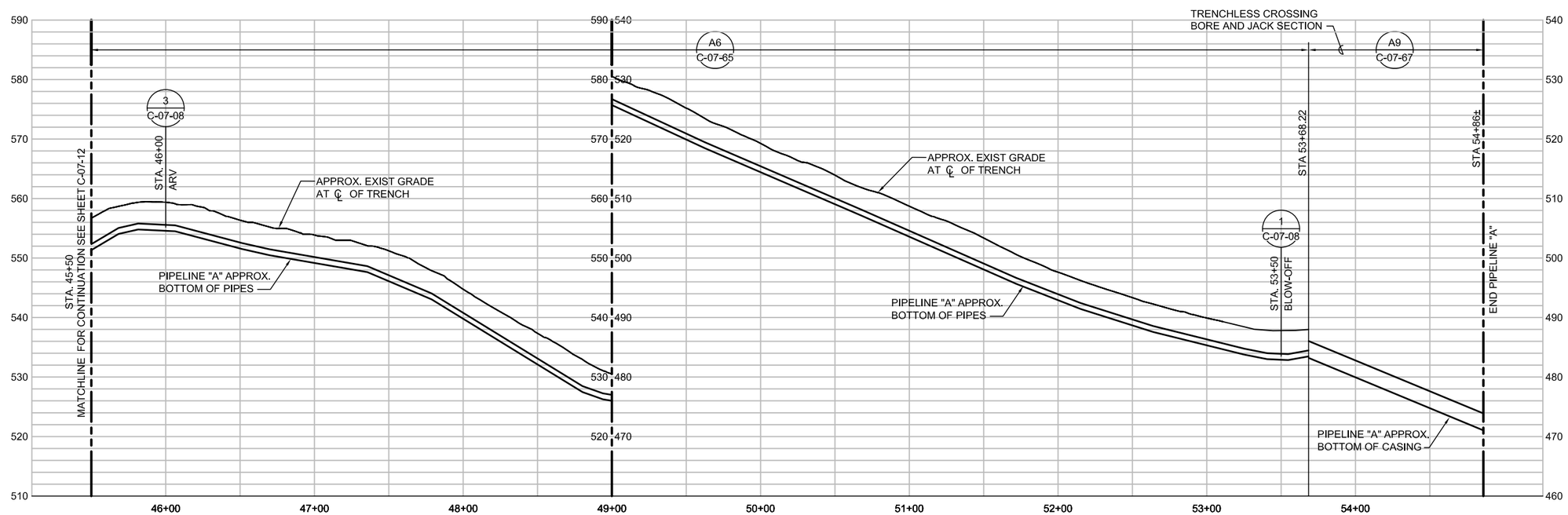

PIPELINE "A" - PROFILE

(SCALE: 1" = 40' H; 1" = 10' V)

DRAFT
NOT FOR
CONSTRUCTION

E2 Consulting Engineers, Inc.
1900 Powell Street, Ste. 250
Emeryville, CA 94608
(510) 652-1164

CH2MHILL®

NO.	DATE	DESCRIPTION	GM/SPEC	DWN	CHKD	SUPV	APVD BY

REVISIONS

NO.	DATE	DESCRIPTION	GM/SPEC	DWN	CHKD	SUPV	APVD BY

REVISIONS

APPROVED BY	
SO	
SUPV	
DSGN	PT
DWN	PC/EE
CHKD	PT
OK	PT
DATE	4/5/13
SCALES	

TOPOCK GROUNDWATER REMEDIATION PROJECT
PIPELINE - PLAN AND PROFILE
STA 45+00 TO STA 54+86
PIPELINE "A"
GAS TRANSMISSION & DISTRIBUTION
PACIFIC GAS AND ELECTRIC COMPANY
SAN FRANCISCO, CALIFORNIA

MICROFILM
BILL OF MATL
DWG LIST
SUPSDS
SUPSD BY
SHEET NO. of SHEETS
C-07-13
REV

FILENAME: E2-C-XXX-0713AD.dwg
PLOT DATE: $PLOTDATE PLOT TIME: $PLOTTIME

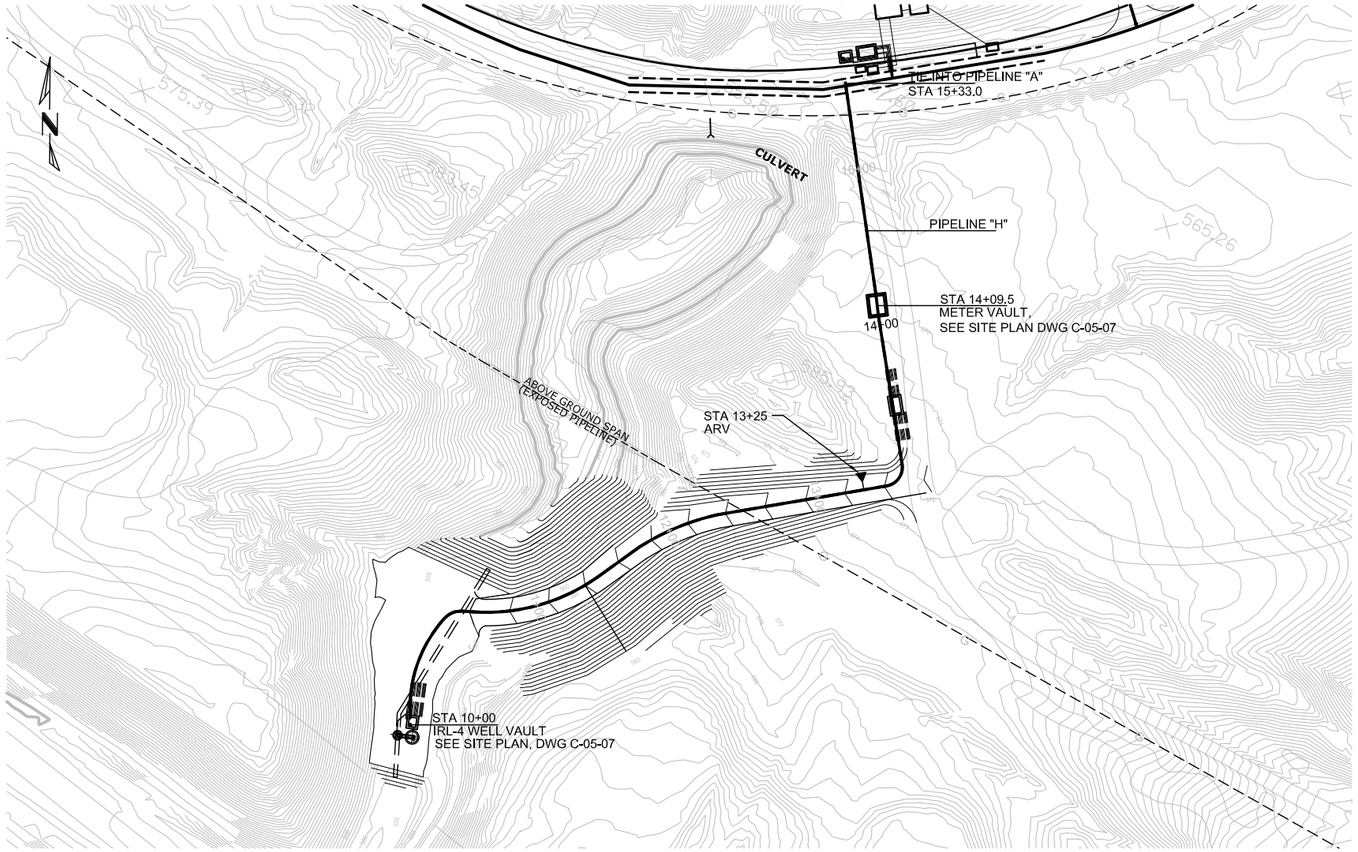

PIPELINE "H" - PLAN

(SCALE: 1" = 40' H)

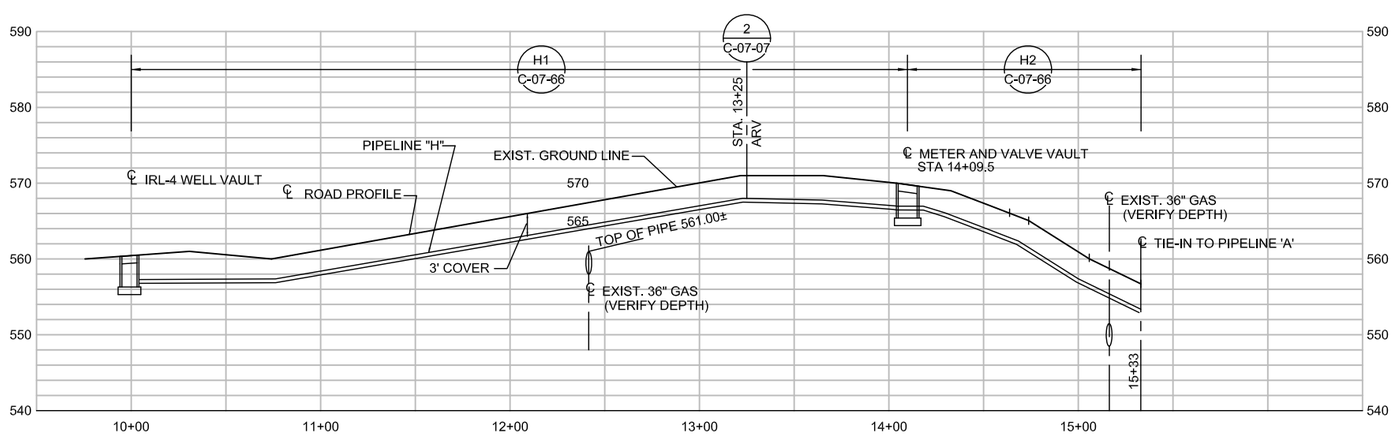

PIPELINE "H" - PROFILE

(SCALE: 1" = 40' H; 1" = 10' V)

NOTES:

1. DEPTHS OF EXISTING UTILITIES ARE UNKNOWN. ALL POTENTIAL CONFLICTS BETWEEN NEW PIPE CONSTRUCTION AND EXISTING UTILITIES WILL BE POTHOLED PRIOR TO THE 100% DESIGN. A DETERMINATION WILL BE MADE WHETHER TO RELOCATE EXISTING UTILITIES OR RE-ROUTE NEW PIPE TRENCHES AROUND EXISTING UTILITIES. THIS WILL BE INCORPORATED INTO THE 100% DESIGN.

2. THE NEW PIPELINE ALIGNMENT SHOWS CENTER OF TRENCH. THE NUMBER AND SIZES OF PIPE IN EACH TRENCH VARIES. REFER TO PIPE SECTION NUMBER ON EACH PLAN AND PROFILE SHEET AND PIPE SCHEDULE ON DRAWING C-07-03 FOR NUMBER AND SIZE OF EACH PIPE. REFER TO TRENCH DETAILS ON DRAWINGS C-07-65, C-07-66 AND C-07-67 FOR ARRANGEMENT OF PIPING IN EACH TRENCH SECTION.

0 40 80 120
HORZ: SCALE: 1"=40'

0 10 20 30
VERT: SCALE: 1"=10'

DRAFT
NOT FOR
CONSTRUCTION

E2 Consulting Engineers, Inc.
1900 Powell Street, Ste. 250
Emeryville, CA 94608
(510) 652-1164

CH2MHILL®

NO.	DATE	DESCRIPTION	GM/SPEC	DWN	CHKD	SUPV	APVD BY
		REVISIONS					

NO.	DATE	DESCRIPTION	GM/SPEC	DWN	CHKD	SUPV	APVD BY
		REVISIONS					

APPROVED BY	
SO	
SUPV	
DSGN	PT
DWN	PC
CHKD	PT
OK	PT
DATE	4/5/13
SCALES	

TOPOCK GROUNDWATER REMEDIATION PROJECT
PIPELINE - PLAN AND PROFILE
STA 10+00 TO STA 15+33
PIPELINE "H"
GAS TRANSMISSION & DISTRIBUTION
PACIFIC GAS AND ELECTRIC COMPANY
SAN FRANCISCO, CALIFORNIA

MICROFILM	
BILL OF MATL	
DWG LIST	
SUPSDS	
SUPSD BY	
SHEET NO. of SHEETS	
C-07-14	REV

PLOT DATE: $PLOTDATE PLOT TIME: $PLOTTIME
FILENAME: E2-C-XXX-0714.dwg

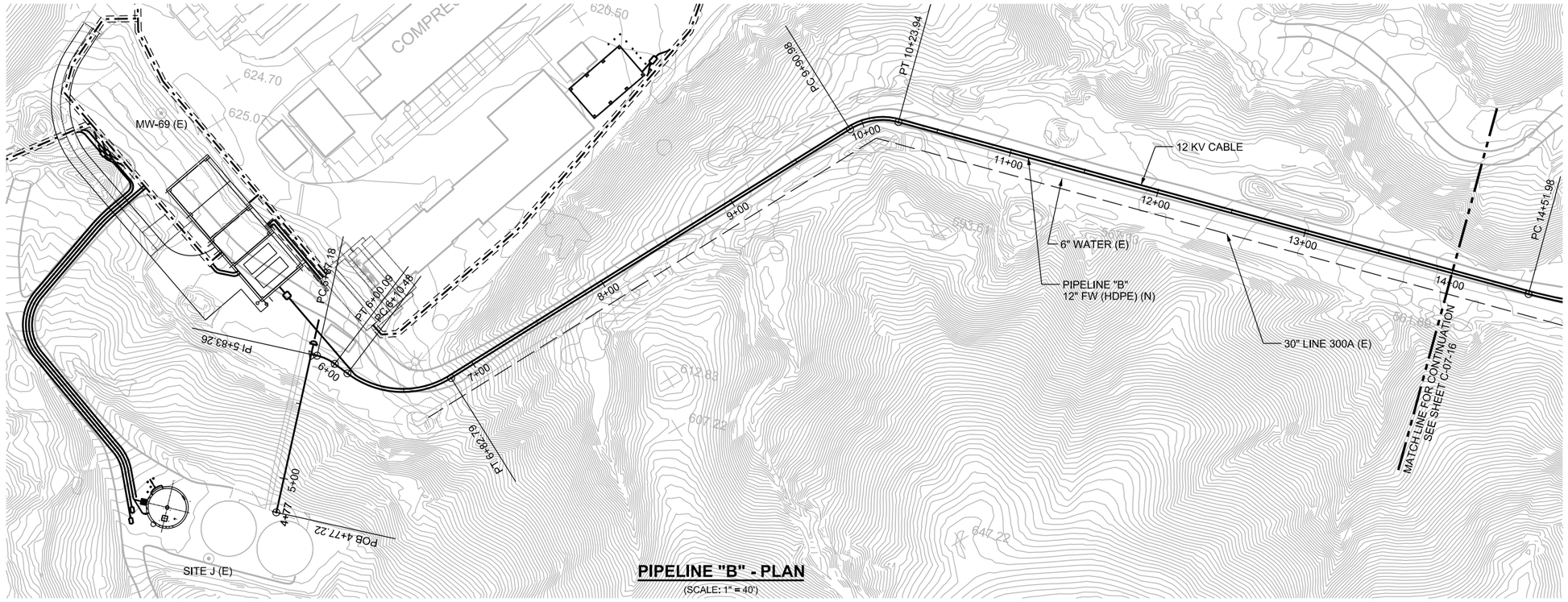

PIPELINE "B" - PLAN

(SCALE: 1" = 40')

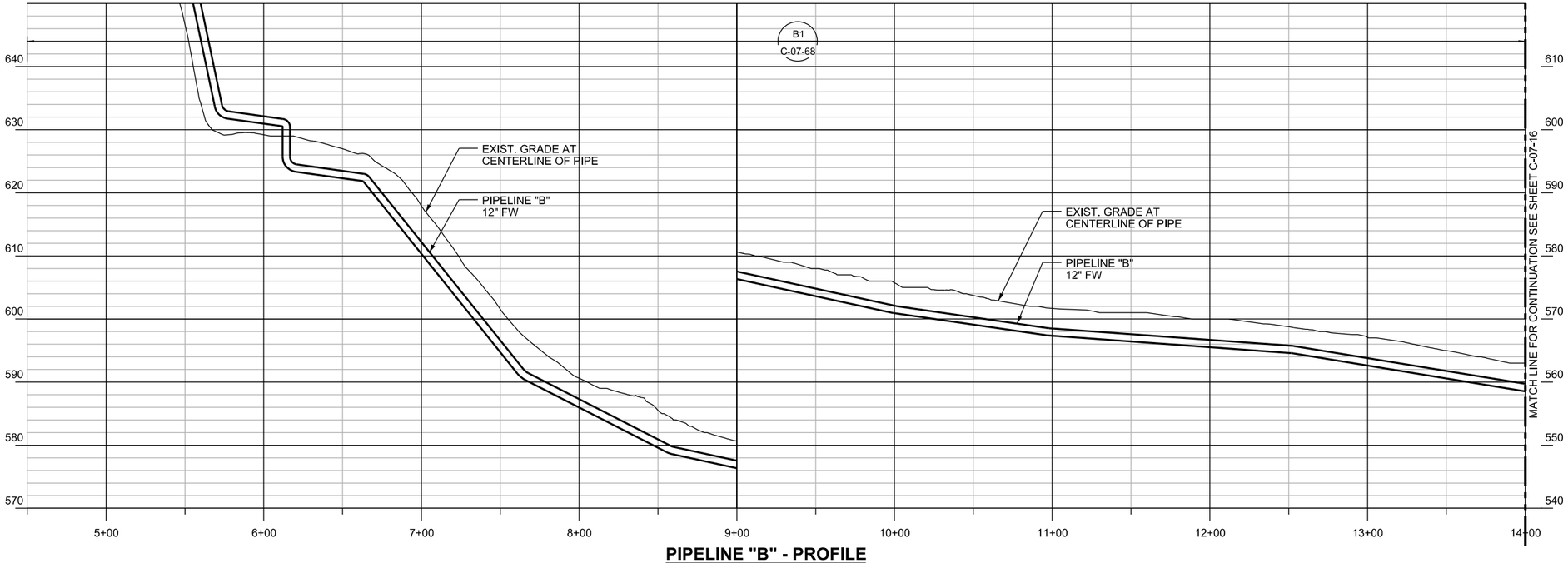

PIPELINE "B" - PROFILE

(SCALE: 1" = 40' H; 1" = 10' V)

N

0 40 80 120
HORIZ: SCALE: 1"=40'

0 10 20 30
VERT: SCALE: 1"=10'

- DRAFT - NOT FOR CONSTRUCTION

AECOM
2101 WEBSTER STREET SUITE 1000
OAKLAND, CA 94612-3060

PROJECT NO. 60272335

NO.	DATE	DESCRIPTION	GM/SPEC	DWN	CHKD	SUPV	APVD BY
0	09/12/12	INTERMEDIATE (60%) DESIGN SUBMITTAL					

REVISIONS

APPROVED BY

SO	XXXXX
SUPV	PD
DSGN	TL
DWN	TL
CHKD	JM
OK	PD
DATE	09/12/12
SCALES	1" = 40'-0"

TOPOCK GROUNDWATER REMEDIATION PROJECT
PIPELINE - PLAN AND PROFILE
STA 4+77 TO STA 14+00
PIPELINE "B"
GAS TRANSMISSION & DISTRIBUTION
PACIFIC GAS AND ELECTRIC COMPANY
SAN FRANCISCO, CALIFORNIA

MICROFILM
BILL OF MATL
DWG LIST
SUPSDS
SUPSD BY
SHEET NO. C-07-15 OF SHEETS
REV 0

N1808

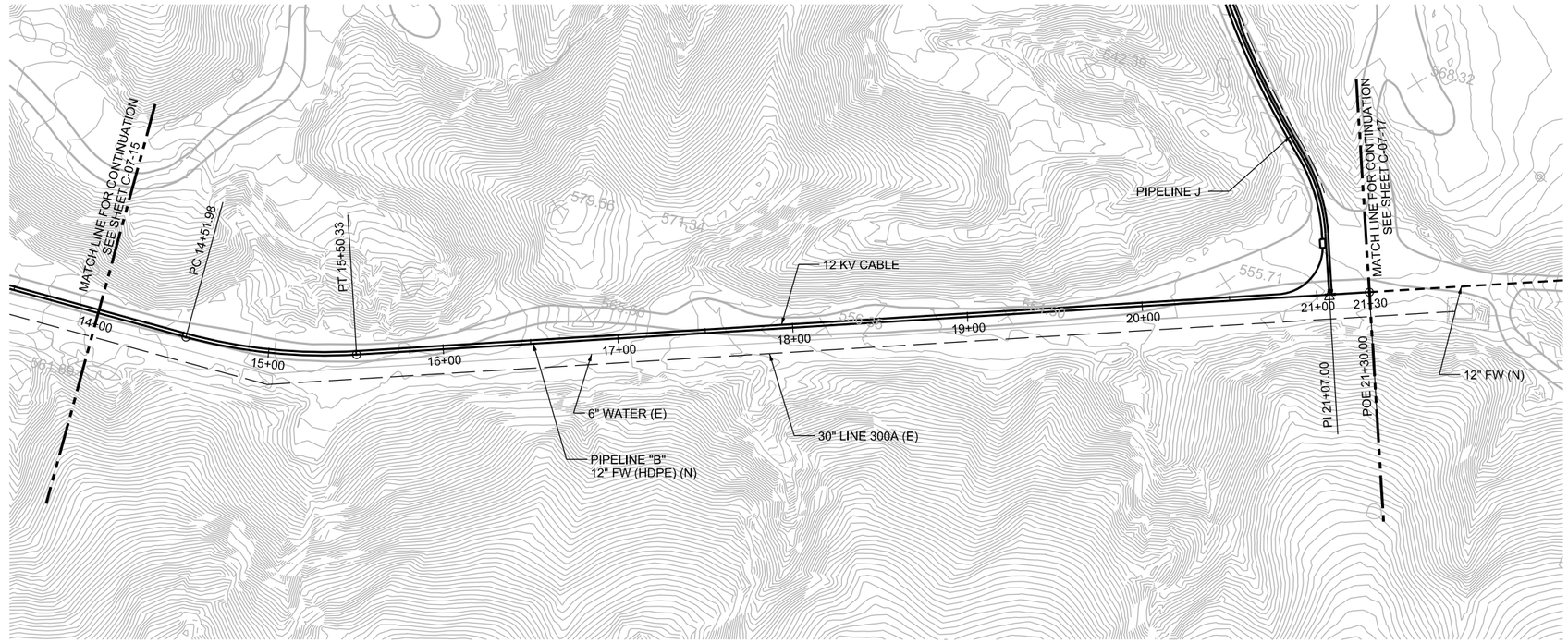

PIPELINE "B" - PLAN

(SCALE: 1" = 40')

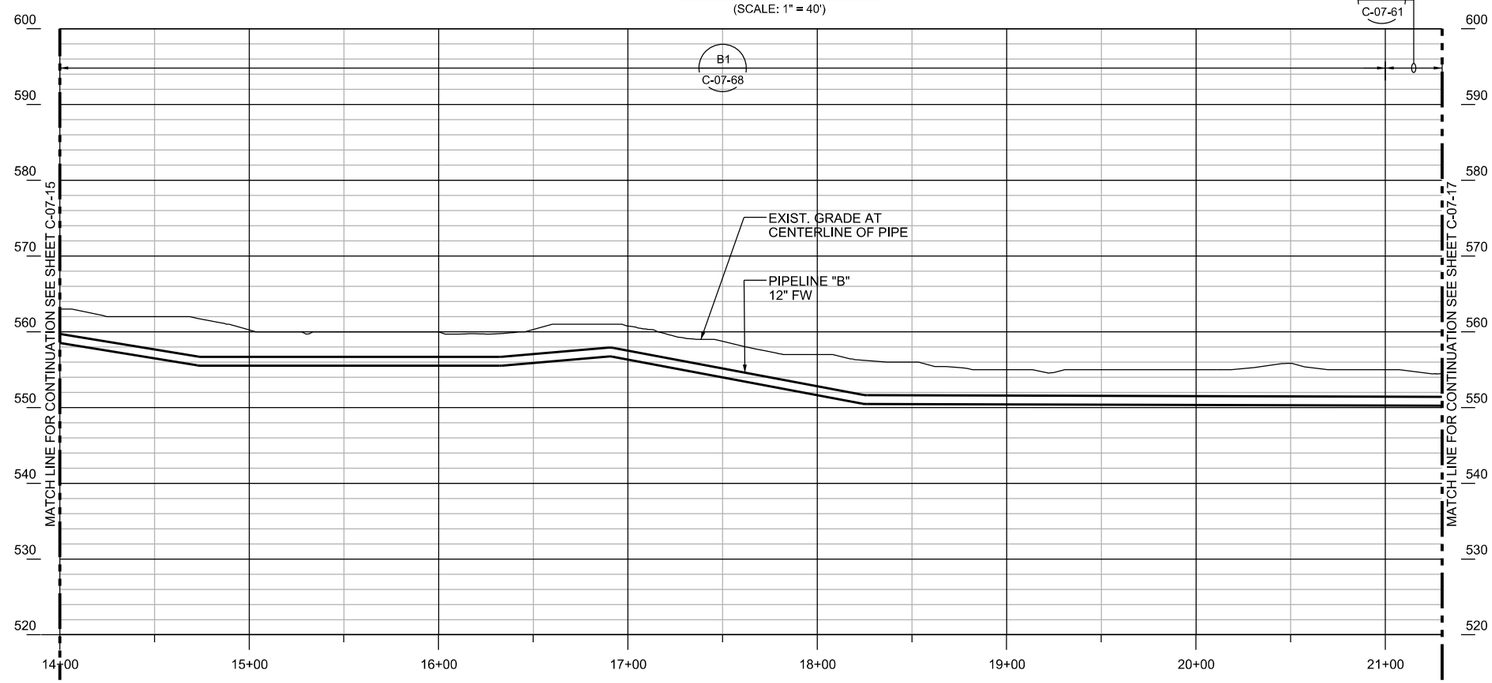

PIPELINE "B" - PROFILE

(SCALE: 1" = 40' H; 1" = 10' V)

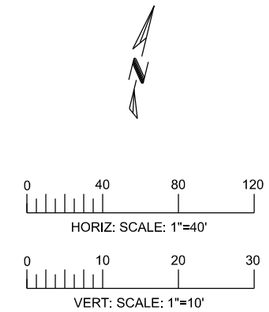

- DRAFT -
NOT FOR CONSTRUCTION

AECOM
2101 WEBSTER STREET SUITE 1000
OAKLAND, CA 94612-3060
PROJECT NO. 60272335

NO.	DATE	DESCRIPTION	GM/SPEC	DWN	CHKD	SUPV	APVD BY
0	09/12/12	INTERMEDIATE (60%) DESIGN SUBMITTAL					

REVISIONS

APPROVED BY

SO	XXXXX
SUPV	PD
DSGN	TL
DWN	TL
CHKD	JM
OK	PD
DATE	09/12/12
SCALES	1" = 40'-0"

TOPOCK GROUNDWATER REMEDIATION PROJECT
PIPELINE - PLAN AND PROFILE
STA 14+00 TO STA 21+30
PIPELINE "B"
GAS TRANSMISSION & DISTRIBUTION
PACIFIC GAS AND ELECTRIC COMPANY
SAN FRANCISCO, CALIFORNIA

MICROFILM
BILL OF MATL
DWG LIST
SUPSDS
SUPSD BY
SHEET NO. OF SHEETS
C-07-16
REV 0

N1808

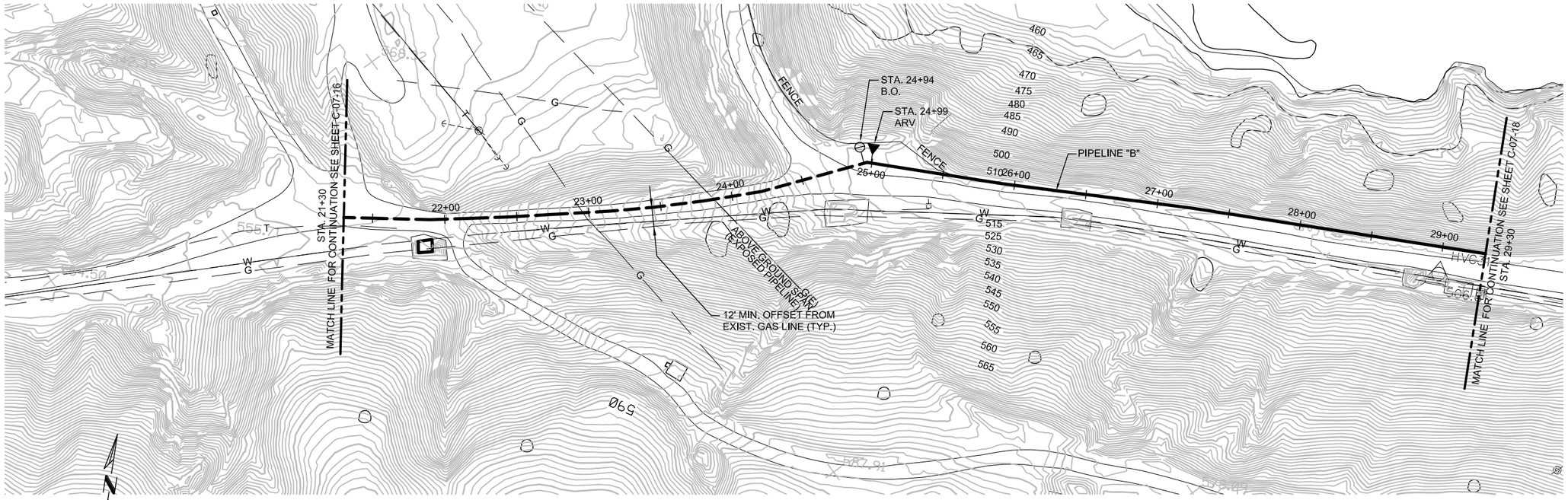

PIPELINE "B" - PLAN

(SCALE: 1" = 40' H)

PIPELINE "B" - PLAN

(SCALE: 1" = 40' H; 1" = 10' V)

HORZ: SCALE: 1"=40'

VERT: SCALE: 1"=10'

NOTES:

1. DEPTHS OF EXISTING UTILITIES ARE UNKNOWN. ALL POTENTIAL CONFLICTS BETWEEN NEW PIPE CONSTRUCTION AND EXISTING UTILITIES WILL BE POTHOLED PRIOR TO THE 100% DESIGN. A DETERMINATION WILL BE MADE WHETHER TO RELOCATE EXISTING UTILITIES OR RE-ROUTE NEW PIPE TRENCHES AROUND EXISTING UTILITIES. THIS WILL BE INCORPORATED INTO THE 100% DESIGN.
2. THE NEW PIPELINE ALIGNMENT SHOWS CENTER OF TRENCH. THE NUMBER AND SIZES OF PIPE IN EACH TRENCH VARIES. REFER TO PIPE SECTION NUMBER ON EACH PLAN AND PROFILE SHEET AND PIPE SCHEDULE ON DRAWING C-07-03 FOR NUMBER AND SIZE OF EACH PIPE. REFER TO TRENCH DETAILS ON DRAWINGS C-07-65, C-07-66 AND C-07-67 FOR ARRANGEMENT OF PIPING IN EACH TRENCH SECTION.
3. MINIMUM OFFSET FROM EXISTING GAS PIPELINE = 12'.

DRAFT
NOT FOR
CONSTRUCTION

E2 Consulting Engineers, Inc.
1900 Powell Street, Ste. 250
Emeryville, CA 94608
(510) 652-1164

CH2MHILL®

NO.	DATE	DESCRIPTION	GM/SPEC	DWN	CHKD	SUPV	APVD BY
		REVISIONS					

NO.	DATE	DESCRIPTION	GM/SPEC	DWN	CHKD	SUPV	APVD BY
		REVISIONS					

APPROVED BY	
SO	
SUPV	
DSGN	PT
DWN	WTH
CHKD	PT
OK	PT
DATE	4/5/13
SCALES	

TOPOCK GROUNDWATER REMEDIATION PROJECT

PIPELINE - PLAN AND PROFILE
STA 21+30 TO STA 29+30
PIPELINE "B"

GAS TRANSMISSION & DISTRIBUTION
PACIFIC GAS AND ELECTRIC COMPANY
SAN FRANCISCO, CALIFORNIA

MICROFILM	
BILL OF MATL	
DWG LIST	
SUPSDS	
SUPSD BY	
SHEET NO. of SHEETS	
C-07-17	REV

FILENAME: E2-C-XXX-0717.dwg
PLOT DATE: $PLOTDATE PLOT TIME: $PLOTTIME

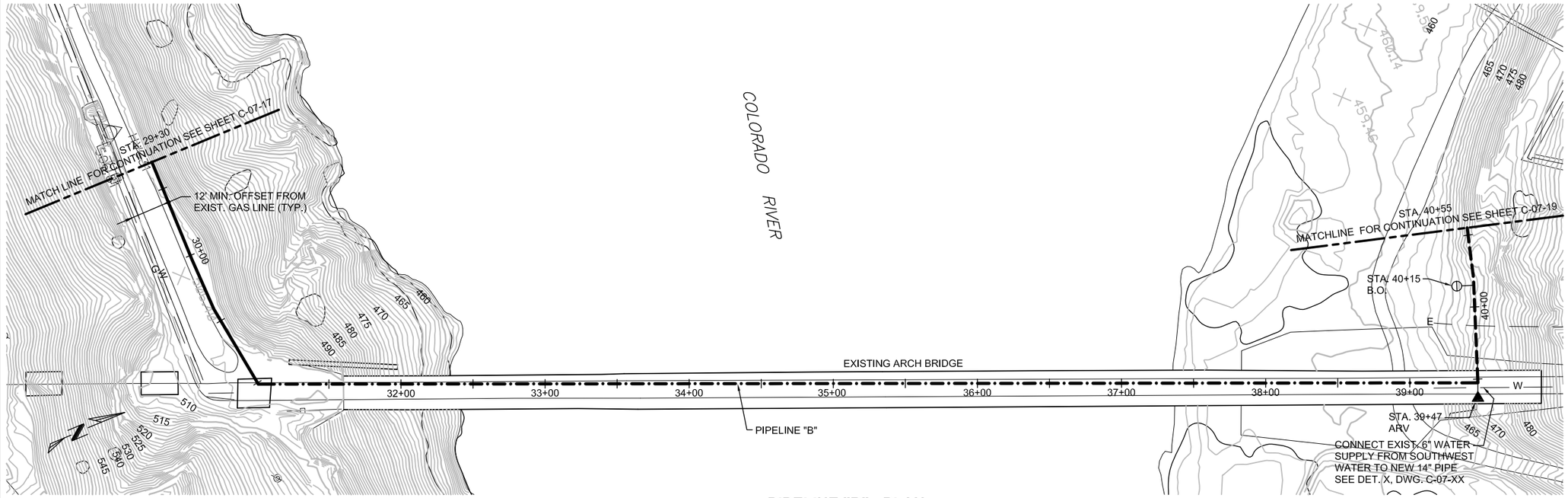

PIPELINE "B" - PLAN

(SCALE: 1" = 40' H)

NOTES:

1. DEPTHS OF EXISTING UTILITIES ARE UNKNOWN. ALL POTENTIAL CONFLICTS BETWEEN NEW PIPE CONSTRUCTION AND EXISTING UTILITIES WILL BE POTHOLED PRIOR TO THE 100% DESIGN. A DETERMINATION WILL BE MADE WHETHER TO RELOCATE EXISTING UTILITIES OR RE-ROUTE NEW PIPE TRENCHES AROUND EXISTING UTILITIES. THIS WILL BE INCORPORATED INTO THE 100% DESIGN.
2. THE NEW PIPELINE ALIGNMENT SHOWS CENTER OF TRENCH. THE NUMBER AND SIZES OF PIPE IN EACH TRENCH VARIES. REFER TO PIPE SECTION NUMBER ON EACH PLAN AND PROFILE SHEET AND PIPE SCHEDULE ON DRAWING C-07-03 FOR NUMBER AND SIZE OF EACH PIPE. REFER TO TRENCH DETAILS ON DRAWINGS C-07-65, C-07-66 AND C-07-67 FOR ARRANGEMENT OF PIPING IN EACH TRENCH SECTION.
3. MINIMUM OFFSET FROM EXISTING GAS PIPELINE = 12'.

0 40 80 120
HORZ: SCALE: 1"=40'

0 10 20 30
VERT: SCALE: 1"=10'

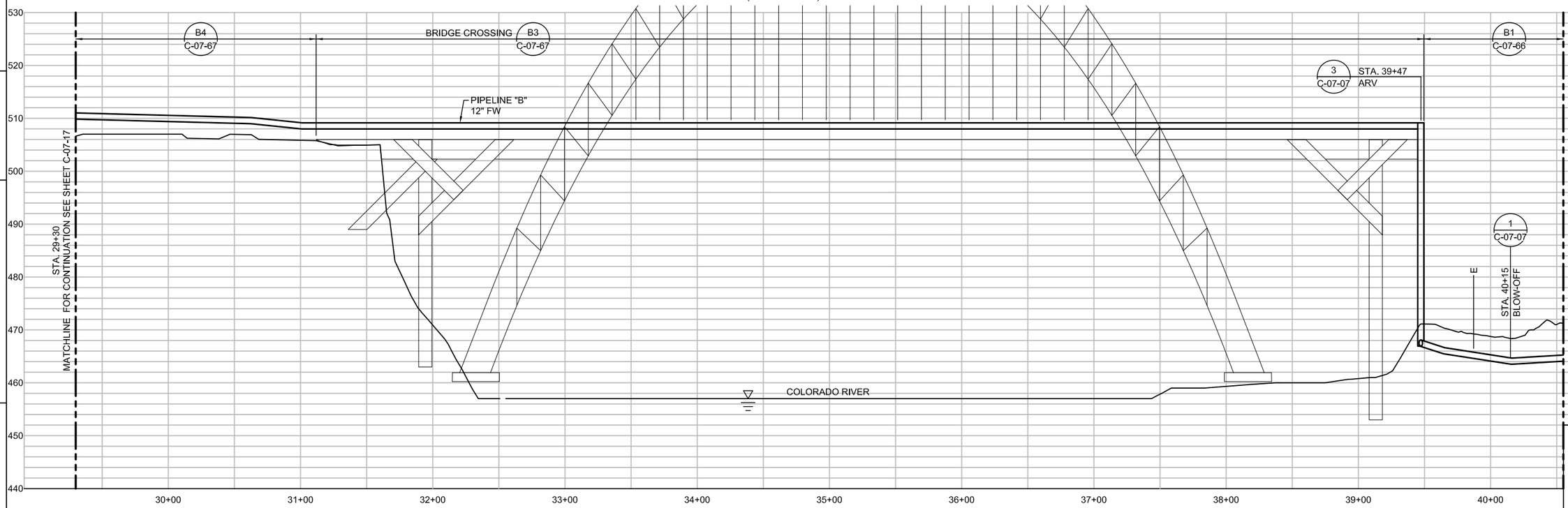

PIPELINE "B" - PROFILE

(SCALE: 1" = 40' H; 1" = 10' V)

DRAFT
NOT FOR
CONSTRUCTION

E2 Consulting Engineers, Inc.
1900 Powell Street, Ste. 250
Emeryville, CA 94608
(510) 652-1164

CH2MHILL®

NO.	DATE	DESCRIPTION	GM/SPEC	DWN	CHKD	SUPV	APVD BY
		REVISIONS					

NO.	DATE	DESCRIPTION	GM/SPEC	DWN	CHKD	SUPV	APVD BY
		REVISIONS					

APPROVED BY	
SO	
SUPV	
DSGN	PT
DWN	WTH
CHKD	PT
OK	PT
DATE	4/5/13
SCALES	

TOPOCK GROUNDWATER REMEDIATION PROJECT
PIPELINE - PLAN AND PROFILE
STA 29+30 TO STA 40+55
PIPELINE "B"
GAS TRANSMISSION & DISTRIBUTION
PACIFIC GAS AND ELECTRIC COMPANY
SAN FRANCISCO, CALIFORNIA

MICROFILM	
BILL OF MATL	
DWG LIST	
SUPSDS	
SUPSD BY	
SHEET NO. of SHEETS	
C-07-18	REV

FILENAME: E2-C-XXX-0718.dwg
PLOT DATE: $PLOTDATE PLOT TIME: $PLOTTIME
FOLD
N180B

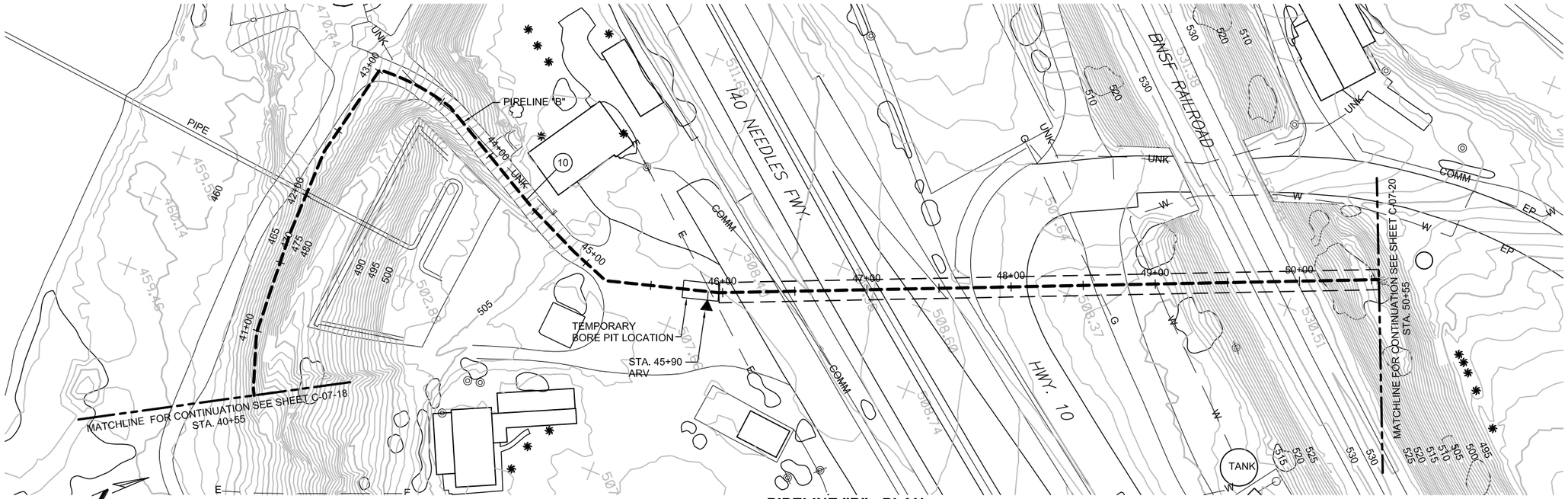

PIPELINE "B" - PLAN

(SCALE: 1" = 40' H)

NOTES:

1. DEPTHS OF EXISTING UTILITIES ARE UNKNOWN. ALL POTENTIAL CONFLICTS BETWEEN NEW PIPE CONSTRUCTION AND EXISTING UTILITIES WILL BE POTHOLED PRIOR TO THE 100% DESIGN. A DETERMINATION WILL BE MADE WHETHER TO RELOCATE EXISTING UTILITIES OR RE-ROUTE NEW PIPE TRENCHES AROUND EXISTING UTILITIES. THIS WILL BE INCORPORATED INTO THE 100% DESIGN.
2. THE NEW PIPELINE ALIGNMENT SHOWS CENTER OF TRENCH. THE NUMBER AND SIZES OF PIPE IN EACH TRENCH VARIES. REFER TO PIPE SECTION NUMBER ON EACH PLAN AND PROFILE SHEET AND PIPE SCHEDULE ON DRAWING C-07-03 FOR NUMBER AND SIZE OF EACH PIPE. REFER TO TRENCH DETAILS ON DRAWINGS C-07-65, C-07-66 AND C-07-67 FOR ARRANGEMENT OF PIPING IN EACH TRENCH SECTION.

0 40 80 120
HORZ: SCALE: 1"=40'

0 10 20 30
VERT: SCALE: 1"=10'

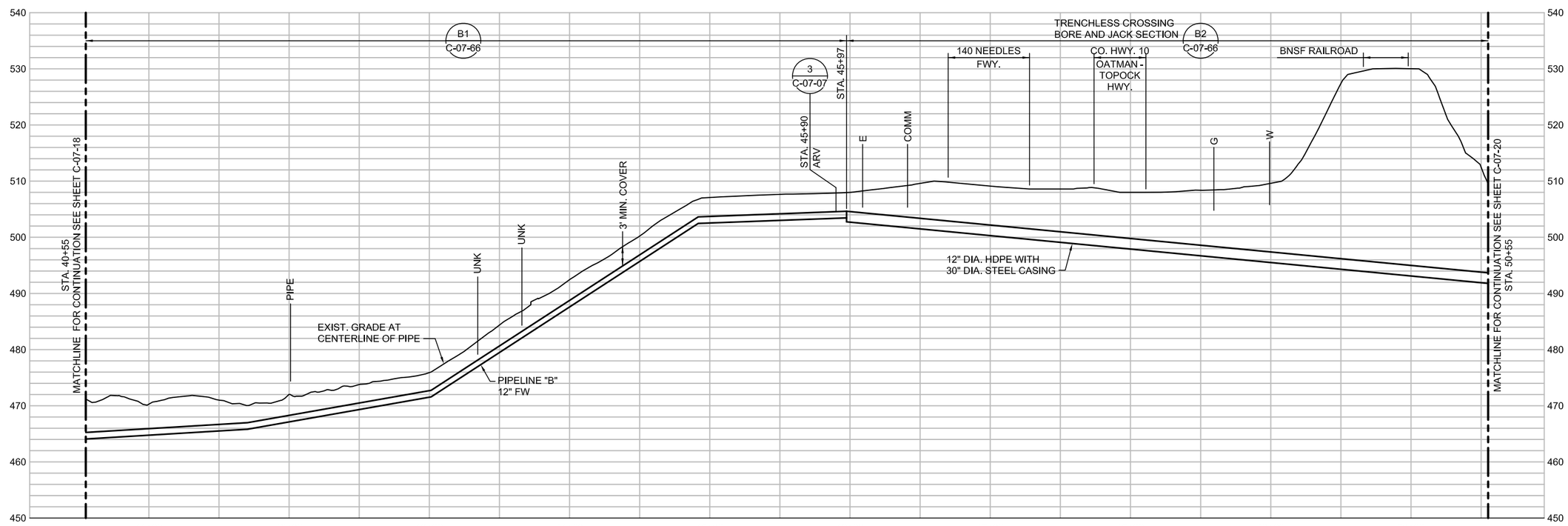

PIPELINE "B" - PROFILE

(SCALE: 1" = 40' H; 1" = 10' V)

DRAFT
NOT FOR
CONSTRUCTION

E2 Consulting Engineers, Inc.
1900 Powell Street, Ste. 250
Emeryville, CA 94608
(510) 652-1164

CH2MHILL®

NO.	DATE	DESCRIPTION	GM/SPEC	DWN	CHKD	SUPV	APVD BY

REVISIONS

NO.	DATE	DESCRIPTION	GM/SPEC	DWN	CHKD	SUPV	APVD BY

REVISIONS

APPROVED BY	
SO	
SUPV	
DSGN	PT
DWN	WTH
CHKD	PT
OK	PT
DATE	4/5/13
SCALES	

TOPOCK GROUNDWATER REMEDIATION PROJECT
PIPELINE - PLAN AND PROFILE
STA 40+55 TO STA 50+55
PIPELINE "B"
GAS TRANSMISSION & DISTRIBUTION
PACIFIC GAS AND ELECTRIC COMPANY
SAN FRANCISCO, CALIFORNIA

MICROFILM	
BILL OF MATL	
DWG LIST	
SUPSDS	
SUPSD BY	
SHEET NO. of SHEETS	
C-07-19	REV

PLOT DATE: $PLOTDATE PLOT TIME: $PLOTTIME
FILENAME: E2-C-XXX-0719.dwg

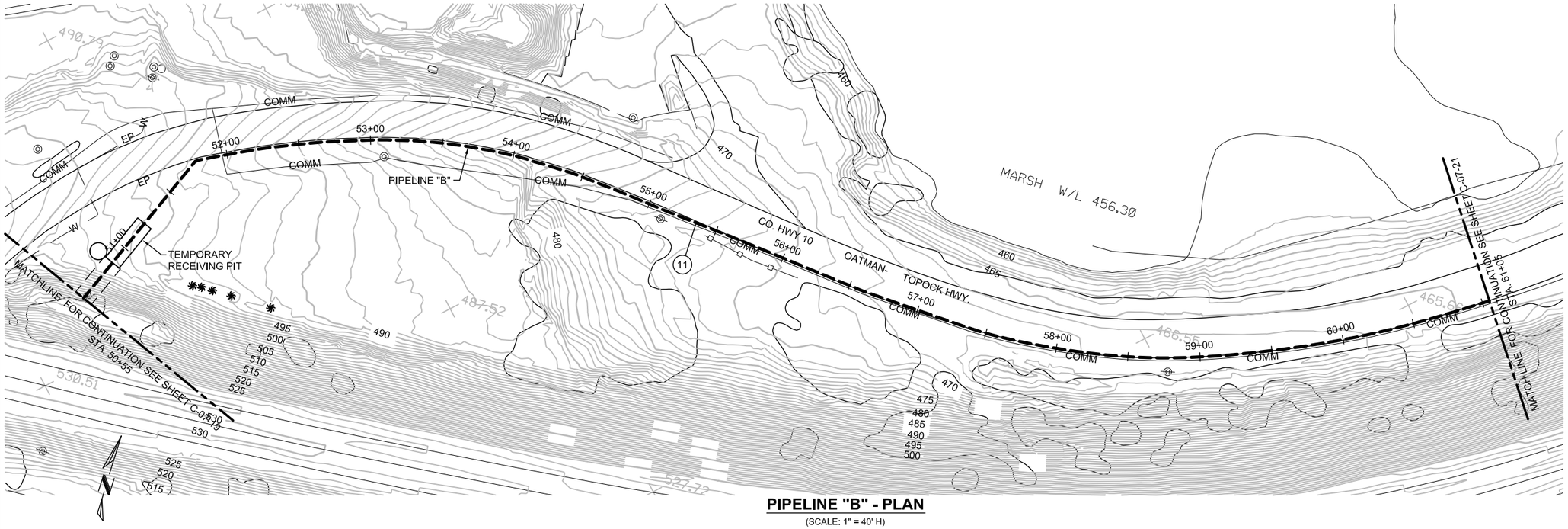

PIPELINE "B" - PLAN

(SCALE: 1" = 40' H)

NOTES:

1. DEPTHS OF EXISTING UTILITIES ARE UNKNOWN. ALL POTENTIAL CONFLICTS BETWEEN NEW PIPE CONSTRUCTION AND EXISTING UTILITIES WILL BE POTHOLED PRIOR TO THE 100% DESIGN. A DETERMINATION WILL BE MADE WHETHER TO RELOCATE EXISTING UTILITIES OR RE-ROUTE NEW PIPE TRENCHES AROUND EXISTING UTILITIES. THIS WILL BE INCORPORATED INTO THE 100% DESIGN.
2. THE NEW PIPELINE ALIGNMENT SHOWS CENTER OF TRENCH. THE NUMBER AND SIZES OF PIPE IN EACH TRENCH VARIES. REFER TO PIPE SECTION NUMBER ON EACH PLAN AND PROFILE SHEET AND PIPE SCHEDULE ON DRAWING C-07-03 FOR NUMBER AND SIZE OF EACH PIPE. REFER TO TRENCH DETAILS ON DRAWINGS C-07-65, C-07-66 AND C-07-67 FOR ARRANGEMENT OF PIPING IN EACH TRENCH SECTION.
3. MAINTAIN 2' HORIZONTAL CLEARANCE FROM EXISTING COMMUNICATIONS CONDUIT.

0 40 80 120
HORZ: SCALE: 1"=40'

0 10 20 30
VERT: SCALE: 1"=10'

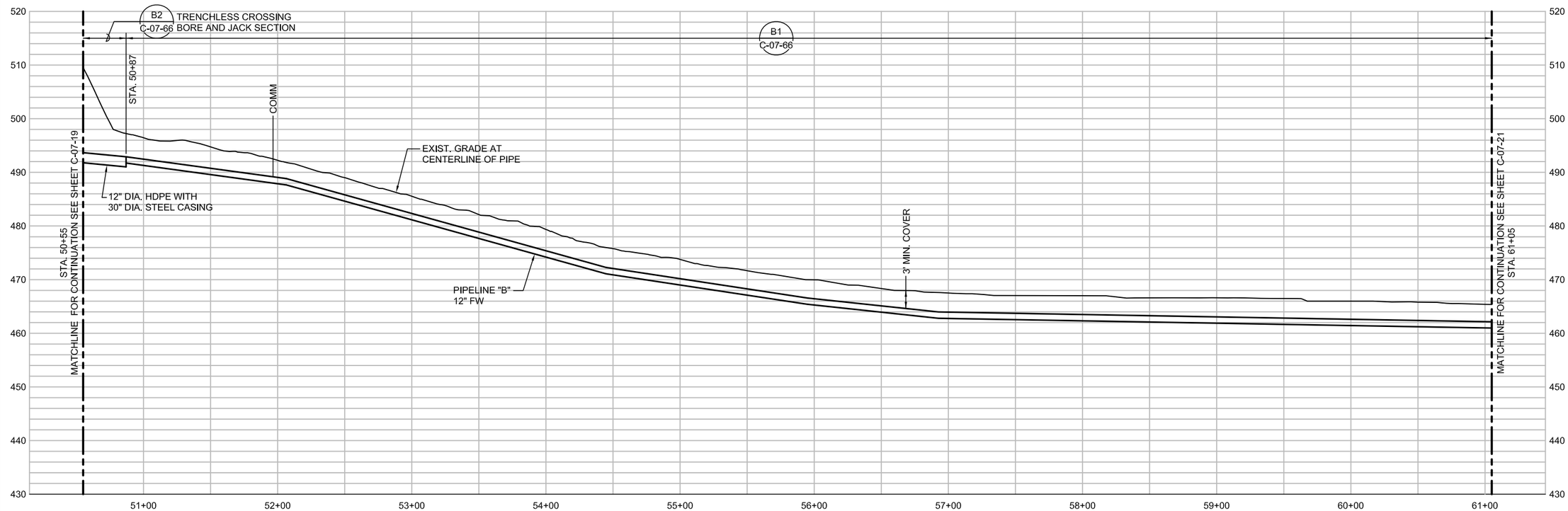

PIPELINE "B" - PROFILE

(SCALE: 1" = 40' H; 1" = 10' V)

DRAFT
NOT FOR
CONSTRUCTION

E2 Consulting Engineers, Inc.
1900 Powell Street, Ste. 250
Emeryville, CA 94608
(510) 652-1164

CH2MHILL®

NO.	DATE	DESCRIPTION	GM/SPEC	DWN	CHKD	SUPV	APVD BY
		REVISIONS					

NO.	DATE	DESCRIPTION	GM/SPEC	DWN	CHKD	SUPV	APVD BY
		REVISIONS					

APPROVED BY
SO
SUPV
DSGN PT
DWN WTH
CHKD PT
OK PT
DATE 4/5/13
SCALES

TOPOCK GROUNDWATER REMEDIATION PROJECT
PIPELINE - PLAN AND PROFILE
STA 50+55 TO STA 61+05
PIPELINE "B"
GAS TRANSMISSION & DISTRIBUTION
PACIFIC GAS AND ELECTRIC COMPANY
SAN FRANCISCO, CALIFORNIA

MICROFILM
BILL OF MATL
DWG LIST
SUPSDS
SUPSD BY
SHEET NO. of SHEETS
C-07-20
REV

PLOT DATE: $PLOTDATE PLOT TIME: $PLOTTIME
FILENAME: E2-C-XXX-0720.dwg

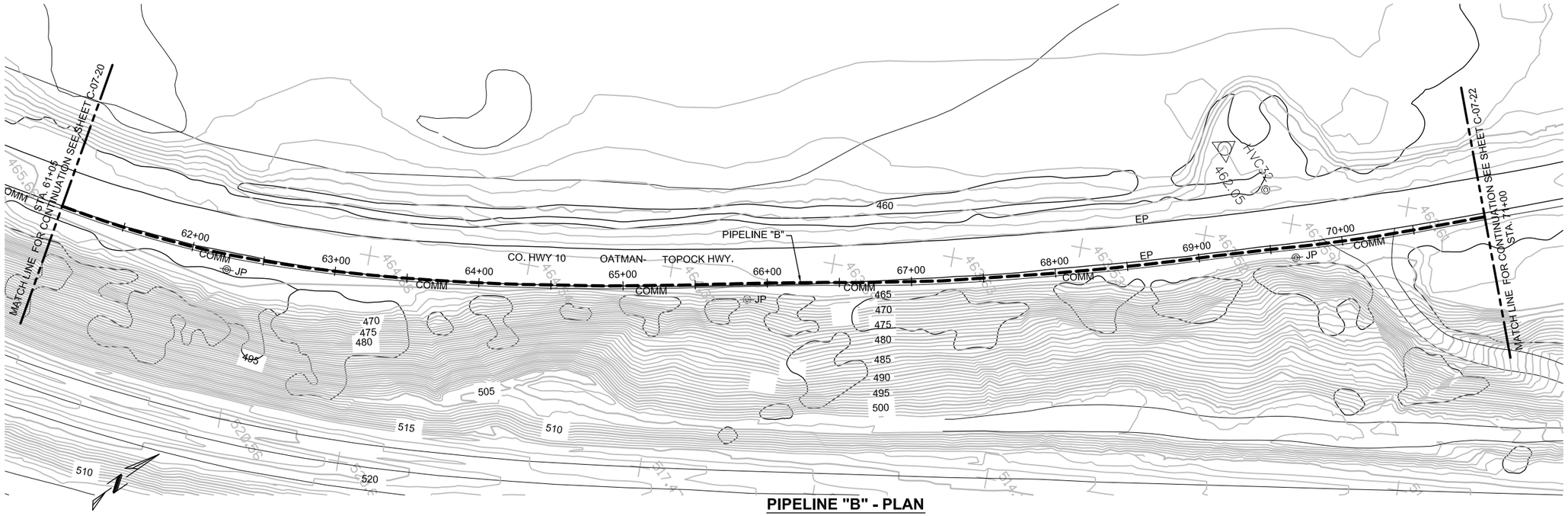

PIPELINE "B" - PLAN

(SCALE: 1" = 40' H)

NOTES:

1. DEPTHS OF EXISTING UTILITIES ARE UNKNOWN. ALL POTENTIAL CONFLICTS BETWEEN NEW PIPE CONSTRUCTION AND EXISTING UTILITIES WILL BE POTHOLED PRIOR TO THE 100% DESIGN. A DETERMINATION WILL BE MADE WHETHER TO RELOCATE EXISTING UTILITIES OR RE-ROUTE NEW PIPE TRENCHES AROUND EXISTING UTILITIES. THIS WILL BE INCORPORATED INTO THE 100% DESIGN.
2. THE NEW PIPELINE ALIGNMENT SHOWS CENTER OF TRENCH. THE NUMBER AND SIZES OF PIPE IN EACH TRENCH VARIES. REFER TO PIPE SECTION NUMBER ON EACH PLAN AND PROFILE SHEET AND PIPE SCHEDULE ON DRAWING C-07-03 FOR NUMBER AND SIZE OF EACH PIPE. REFER TO TRENCH DETAILS ON DRAWINGS C-07-65, C-07-66 AND C-07-67 FOR ARRANGEMENT OF PIPING IN EACH TRENCH SECTION.
3. MAINTAIN 2' HORIZONTAL CLEARANCE FROM EXISTING COMMUNICATIONS CONDUIT.

0 40 80 120
HORZ: SCALE: 1"=40'

0 10 20 30
VERT: SCALE: 1"=10'

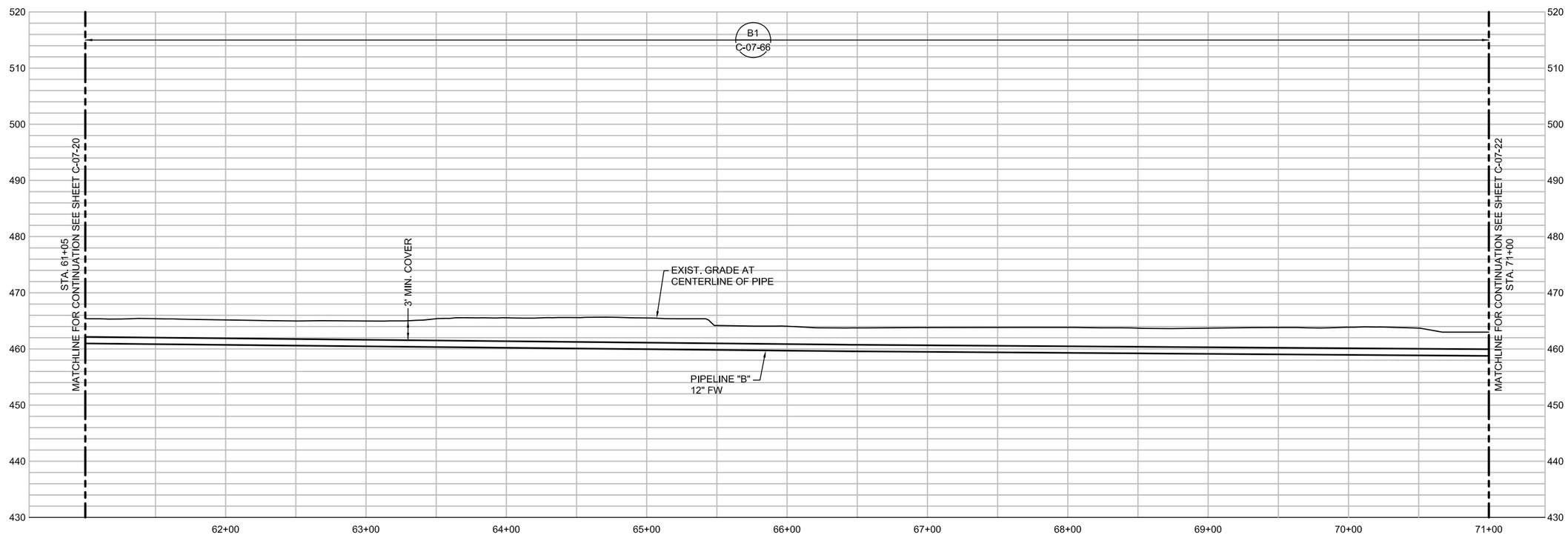

PIPELINE "B" - PROFILE

(SCALE: 1" = 40' H; 1" = 10' V)

DRAFT
NOT FOR
CONSTRUCTION

E2 Consulting Engineers, Inc.
1900 Powell Street, Ste. 250
Emeryville, CA 94608
(510) 652-1164

CH2MHILL®

NO.	DATE	DESCRIPTION	GM/SPEC	DWN	CHKD	SUPV	APVD BY
		REVISIONS					

NO.	DATE	DESCRIPTION	GM/SPEC	DWN	CHKD	SUPV	APVD BY
		REVISIONS					

APPROVED BY
SO
SUPV
DSGN PT
DWN WTH
CHKD PT
OK PT
DATE 4/5/13
SCALES

TOPOCK GROUNDWATER REMEDIATION PROJECT
PIPELINE - PLAN AND PROFILE
STA 61+05 TO STA 71+00
PIPELINE "B"
GAS TRANSMISSION & DISTRIBUTION
PACIFIC GAS AND ELECTRIC COMPANY
SAN FRANCISCO, CALIFORNIA

MICROFILM
BILL OF MATL
DWG LIST
SUPSDS
SUPSD BY
SHEET NO. of SHEETS
C-07-21
REV

PLOT DATE: $PLOTDATE PLOT TIME: $PLOTTIME
FILENAME: E2-C-XXX-0721.dwg

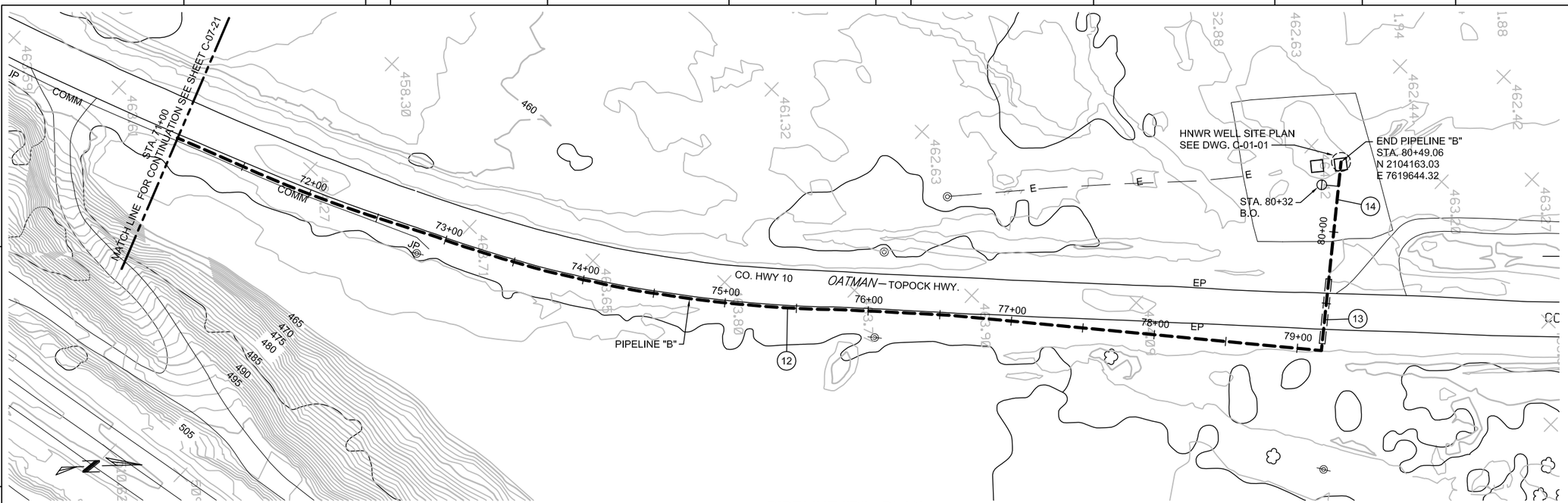

NOTES:

1. DEPTHS OF EXISTING UTILITIES ARE UNKNOWN. ALL POTENTIAL CONFLICTS BETWEEN NEW PIPE CONSTRUCTION AND EXISTING UTILITIES WILL BE POTHOLED PRIOR TO THE 100% DESIGN. A DETERMINATION WILL BE MADE WHETHER TO RELOCATE EXISTING UTILITIES OR RE-ROUTE NEW PIPE TRENCHES AROUND EXISTING UTILITIES. THIS WILL BE INCORPORATED INTO THE 100% DESIGN.
2. THE NEW PIPELINE ALIGNMENT SHOWS CENTER OF TRENCH. THE NUMBER AND SIZES OF PIPE IN EACH TRENCH VARIES. REFER TO PIPE SECTION NUMBER ON EACH PLAN AND PROFILE SHEET AND PIPE SCHEDULE ON DRAWING C-07-03 FOR NUMBER AND SIZE OF EACH PIPE. REFER TO TRENCH DETAILS ON DRAWINGS C-07-65, C-07-66 AND C-07-67 FOR ARRANGEMENT OF PIPING IN EACH TRENCH SECTION.
3. MAINTAIN 2' HORIZONTAL CLEARANCE FROM EXISTING COMMUNICATIONS CONDUIT.

0 40 80 120
HORZ: SCALE: 1"=40'

0 10 20 30
VERT: SCALE: 1"=10'

PIPELINE "B" - PLAN

(SCALE: 1" = 40' H)

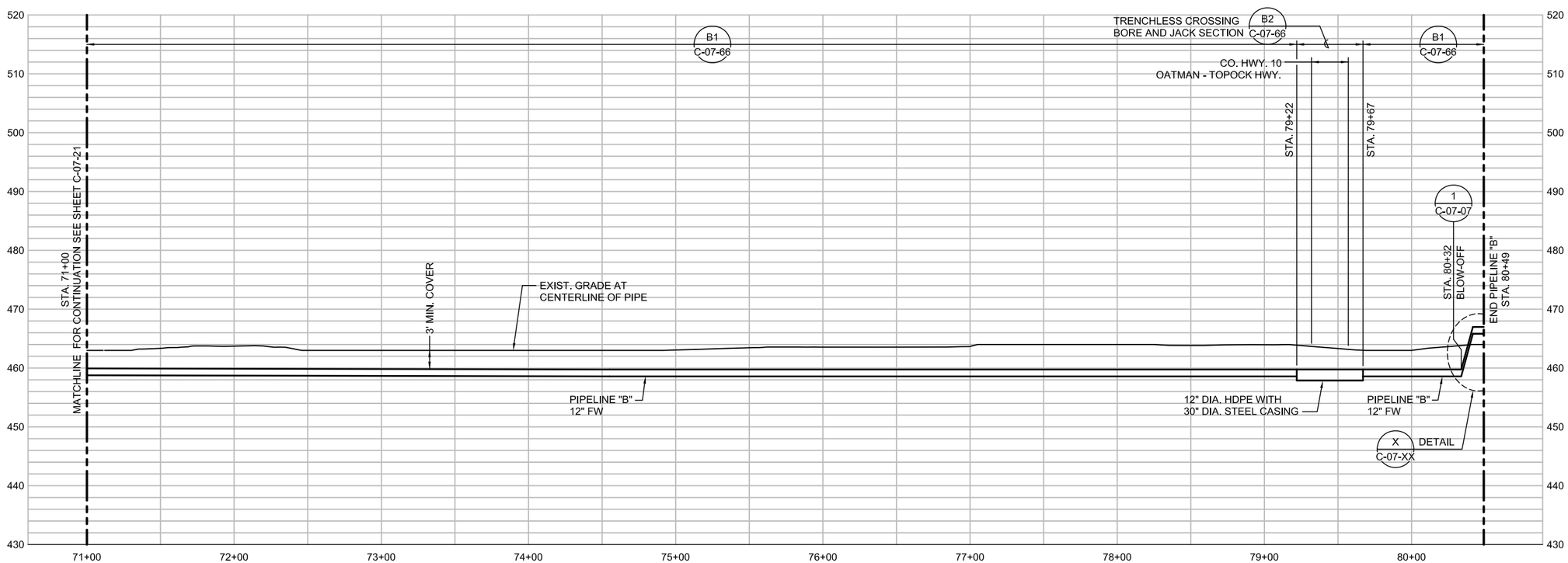

PIPELINE "B" - PROFILE

(SCALE: 1" = 40' H; 1" = 10' V)

DRAFT
NOT FOR
CONSTRUCTION

E2 Consulting Engineers, Inc.
1900 Powell Street, Ste. 250
Emeryville, CA 94608
(510) 652-1164

CH2MHILL®

NO.	DATE	DESCRIPTION	GM/SPEC	DWN	CHKD	SUPV	APVD BY
		REVISIONS					

NO.	DATE	DESCRIPTION	GM/SPEC	DWN	CHKD	SUPV	APVD BY
		REVISIONS					

APPROVED BY
SO
SUPV
DSGN PT
DWN WTH
CHKD PT
OK PT
DATE 4/5/13
SCALES

TOPOCK GROUNDWATER REMEDIATION PROJECT
PIPELINE - PLAN AND PROFILE
STA 71+00 TO STA 80+49.06
PIPELINE "B"
GAS TRANSMISSION & DISTRIBUTION
PACIFIC GAS AND ELECTRIC COMPANY
SAN FRANCISCO, CALIFORNIA

MICROFILM
BILL OF MATL
DWG LIST
SUPSDS
SUPSD BY
SHEET NO. of SHEETS
C-07-22
REV

PLOT DATE: $PLOTDATE PLOT TIME: $PLOTTIME
FILENAME: E2-C-XXX-0722.dwg

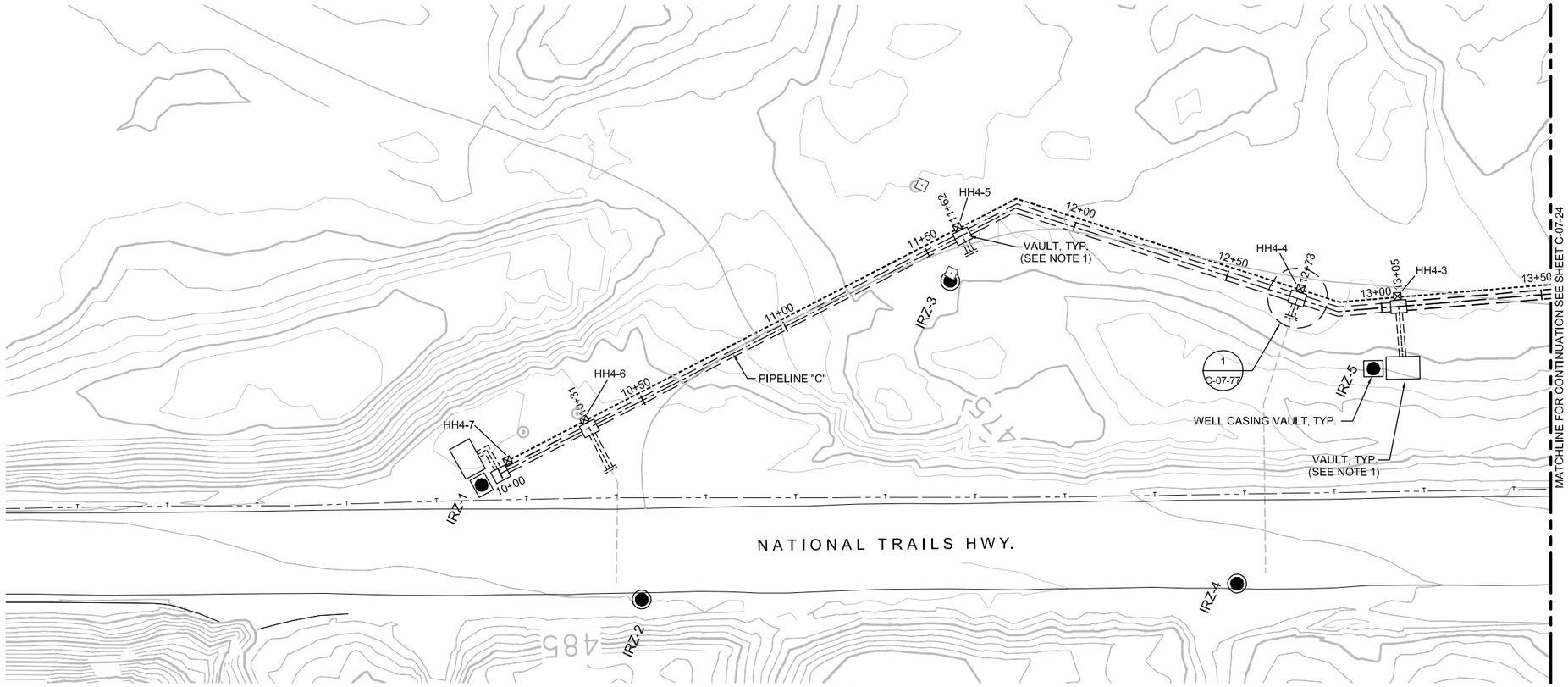

PIPELINE "C" - PLAN

(SCALE: 1" = 20')

NOTES
1. VAULT DETAILS SHOWN ON SHEETS M-X-X AND S-X-X.
2. SEE CONDUIT AND CABLE SCHEDULES AND SINGLE LINE DIAGRAMS ON SHEETS E-00-12 THRU E-00-20.

0 20 40 60
HORIZ: SCALE: 1"=20'

0 10 20 30
VERT: SCALE: 1"=10'

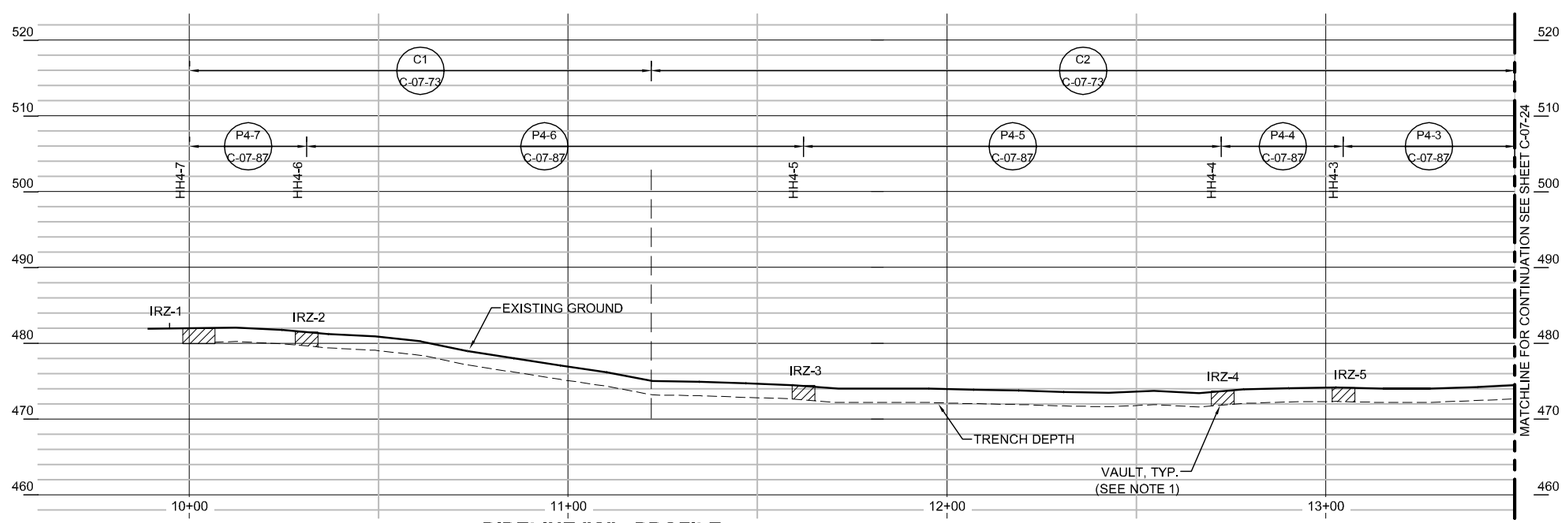

PIPELINE "C" - PROFILE

(SCALE: 1" = 20' H; 1" = 10' V)

- DRAFT -
NOT FOR
CONSTRUCTION

ETIC ENGINEERING

ARCADIS

NO.	DATE	DESCRIPTION	GM/SPEC	DWN	CHKD	SUPV	APVD BY
0	04/05/13	INTERMEDIATE (60%) DESIGN SUBMITTAL		AJW	KLD	JPB	JEF

REVISIONS

APPROVED BY: JEF

SO	
SUPV	JPB
DSGN	KLD
DWN	AJW
CHKD	JPB
OK	JEF
DATE	04/05/13
SCALES	1" = 20'

TOPOCK GROUNDWATER REMEDIATION PROJECT

PIPELINE - PLAN AND PROFILE
STA 10+00 TO STA 13+50
PIPELINE "C1" & "C2"

GAS TRANSMISSION & DISTRIBUTION
PACIFIC GAS AND ELECTRIC COMPANY
SAN FRANCISCO, CALIFORNIA

MICROFILM
BILL OF MATL
DWG LIST
SUPSDS
SUPSD BY
SHEET NO. of SHEETS
C-07-23
REV

04/05/2013, 08:38, G:\Graphics\VAR\TOPOCK-01\Submittal-60%_March-2013\HILL Formatted\C-07-23 to 43_Plan&Profile.dwg, Tab: C-07-23

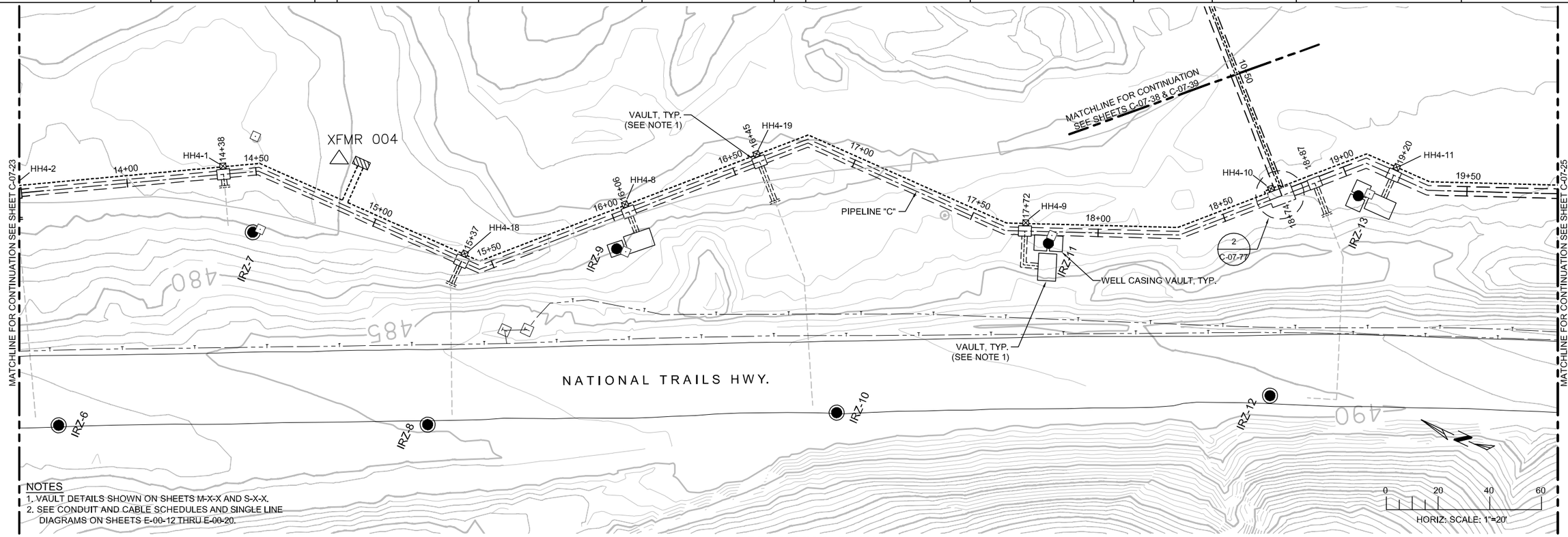

PIPELINE "C" - PLAN

(SCALE: 1" = 20')

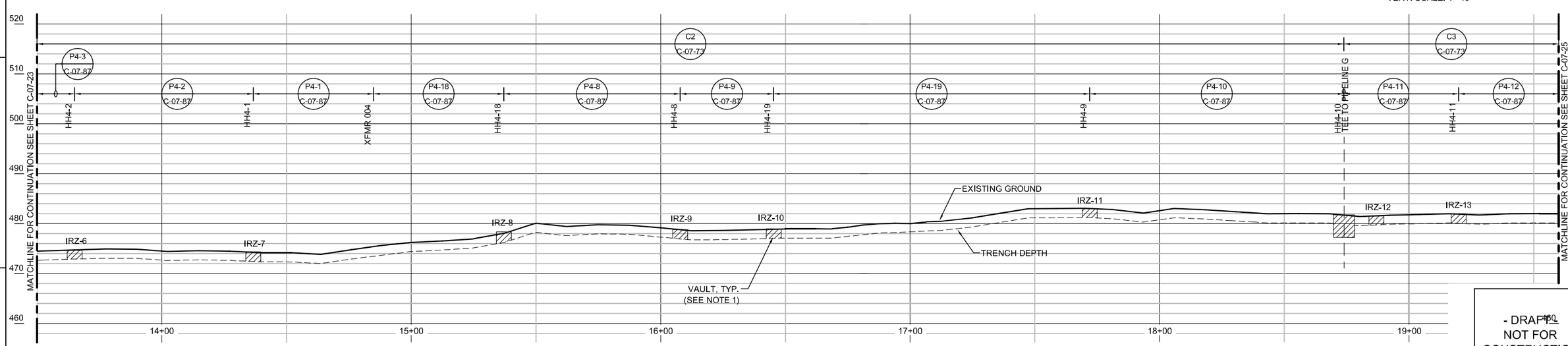

PIPELINE "C" - PROFILE

(SCALE: 1" = 20' H; 1" = 10' V)

NOTES
1. VAULT DETAILS SHOWN ON SHEETS M-X-X AND S-X-X.
2. SEE CONDUIT AND CABLE SCHEDULES AND SINGLE LINE DIAGRAMS ON SHEETS E-00-12 THRU E-00-20.

- DRAFT -
NOT FOR CONSTRUCTION

ETIC ENGINEERING

ARCADIS

NO.	DATE	DESCRIPTION	GM/SPEC	DWN	CHKD	SUPV	APVD BY
0	04/05/13	INTERMEDIATE (60%) DESIGN SUBMITTAL		AJW	KLD	JPB	JEF

REVISIONS

APPROVED BY: JEF

SO	
SUPV	JPB
DSGN	KLD
DWN	AJW
CHKD	JPB
OK	JEF
DATE	04/05/13
SCALES	1" = 20'

TOPOCK GROUNDWATER REMEDIATION PROJECT

PIPELINE - PLAN AND PROFILE STA 13+50 TO STA 19+60 PIPELINE "C2" & "C3"

GAS TRANSMISSION & DISTRIBUTION
PACIFIC GAS AND ELECTRIC COMPANY
SAN FRANCISCO, CALIFORNIA

MICROFILM
BILL OF MATL
DWG LIST
SUPSDS
SUPSD BY
SHEET NO. of SHEETS
C-07-24
REV

04/05/2013, 08:38, G:\Graphics\ARTOPOCK-01\Submittal-60%_Mar-2013\HILL Formatted\C-07-23 to 43_Plan&Profile.dwg, Tab: C-07-24

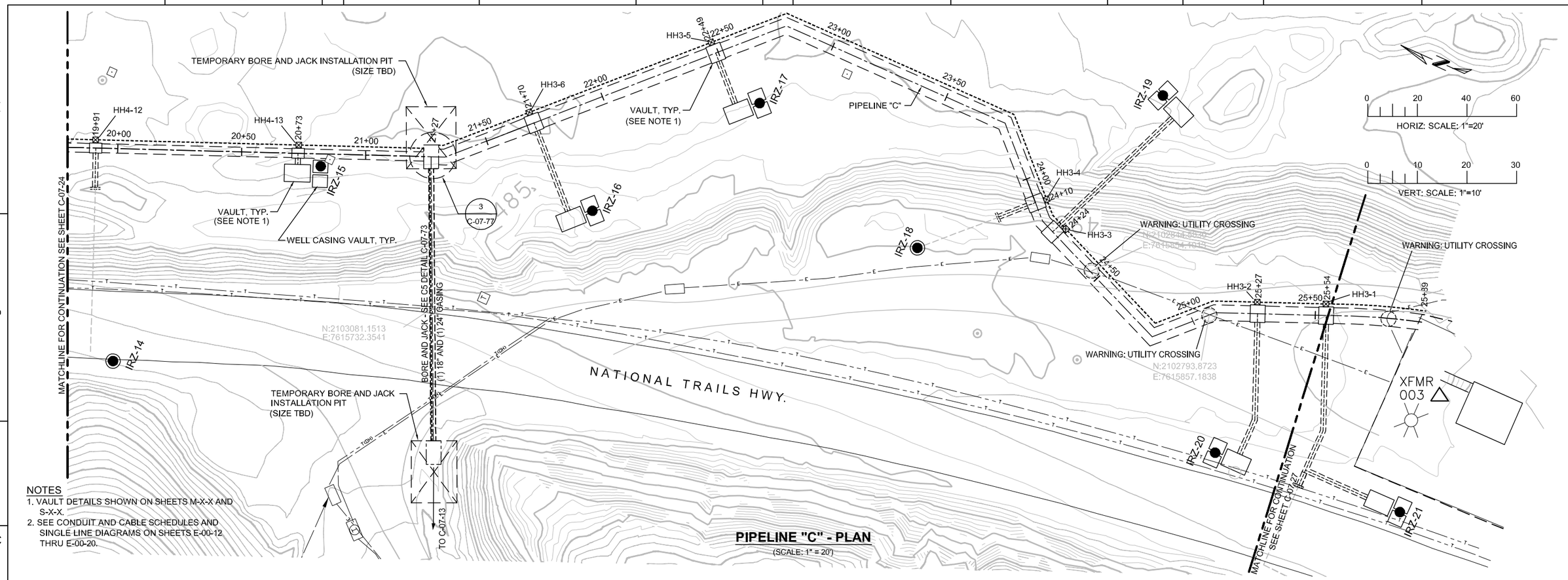

NOTES
1. VAULT DETAILS SHOWN ON SHEETS M-X-X AND S-X-X.
2. SEE CONDUIT AND CABLE SCHEDULES AND SINGLE LINE DIAGRAMS ON SHEETS E-00-12 THRU E-00-20.

PIPELINE "C" - PLAN
(SCALE: 1" = 20')

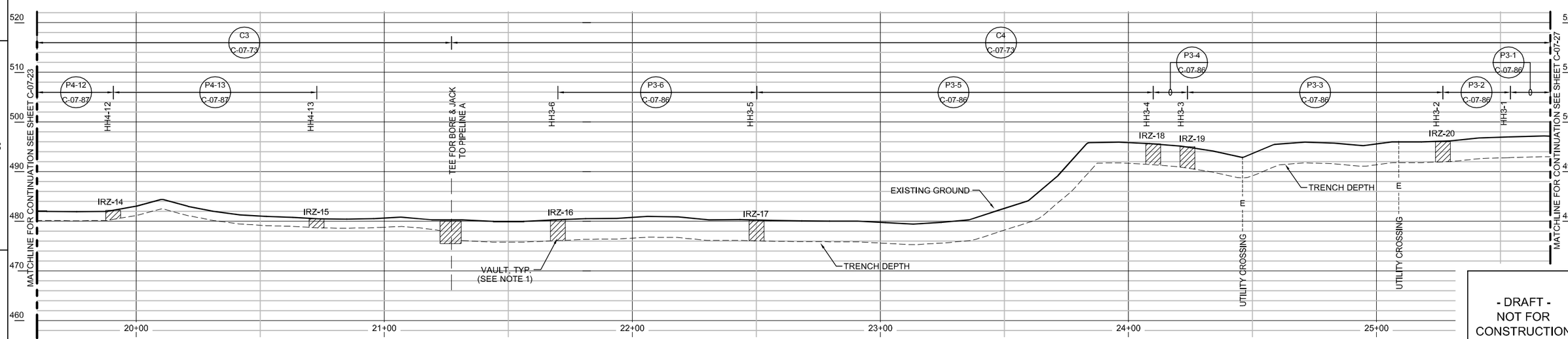

PIPELINE "C" - PROFILE
(SCALE: 1" = 20' H; 1" = 10' V)

- DRAFT -
NOT FOR CONSTRUCTION

ETIC ENGINEERING

ARCADIS

NO.	DATE	DESCRIPTION	GM/SPEC	DWN	CHKD	SUPV	APVD BY
0	04/05/13	INTERMEDIATE (60%) DESIGN SUBMITTAL		AJW	KLD	JPB	JEF

REVISIONS

APPROVED BY	
JEF	
SO	
SUPV	JPB
DSGN	KLD
DWN	AJW
CHKD	JPB
OK	JEF
DATE	04/05/13
SCALES	1" = 20'

TOPOCK GROUNDWATER REMEDIATION PROJECT
PIPELINE - PLAN AND PROFILE
STA 19+60 TO STA 25+89
PIPELINE "C3" & "C4"
GAS TRANSMISSION & DISTRIBUTION
PACIFIC GAS AND ELECTRIC COMPANY
SAN FRANCISCO, CALIFORNIA

MICROFILM	
BILL OF MATL	
DWG LIST	
SUPSDS	
SUPSD BY	
SHEET NO. of SHEETS	REV
C-07-25	

04/05/2013, 08:38, G:\Graphics\AR\TOPOCK-01\Submittal-60%_March2013\HILL Formatted\C-07-23 to 43_Plan&Profile.dwg, Tab: C-07-25

N1808

NOTES
1. VAULT DETAILS SHOWN ON SHEETS M-X-X AND S-X-X.
2. SEE CONDUIT AND CABLE SCHEDULES AND SINGLE LINE DIAGRAMS ON SHEETS E-00-12 THRU E-00-20.

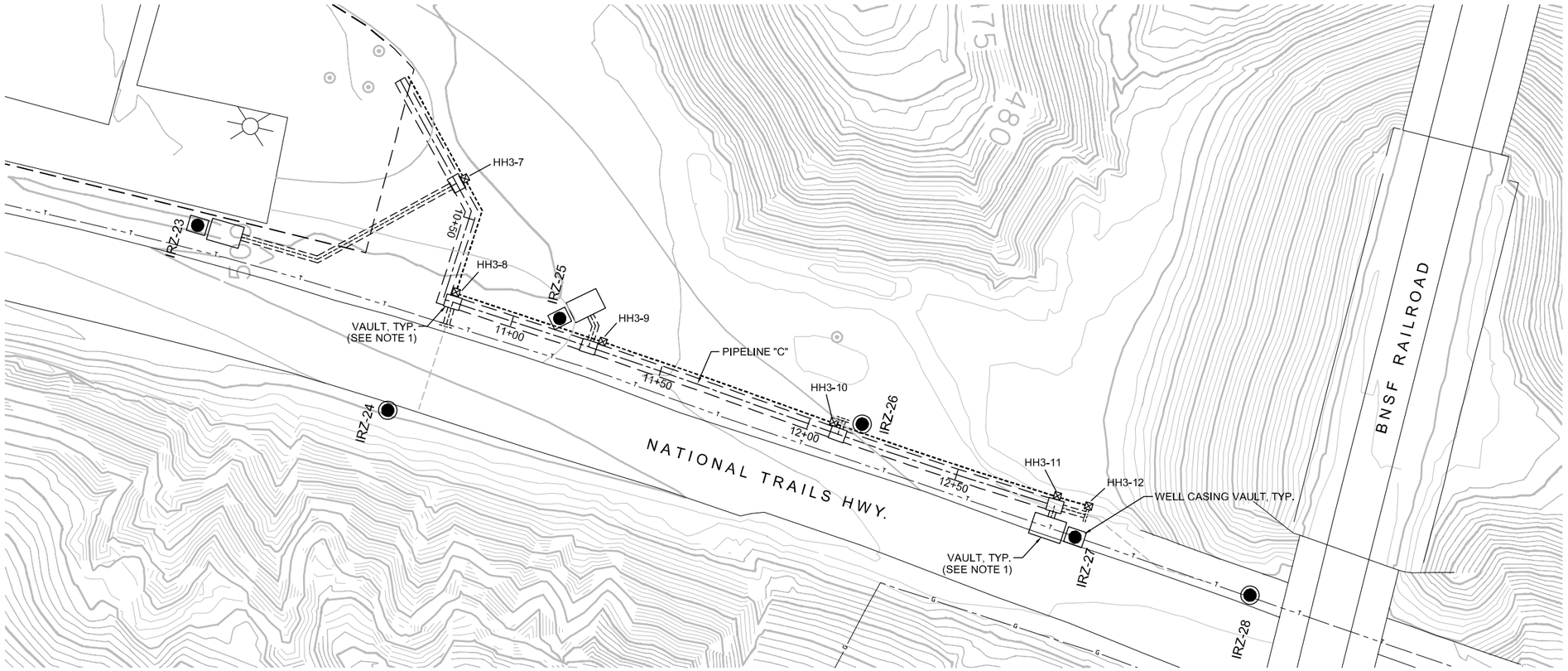

PIPELINE "C" - PLAN

(SCALE: 1" = 20')

0 20 40 60
HORIZ: SCALE: 1"=20'

0 10 20 30
VERT: SCALE: 1"=10'

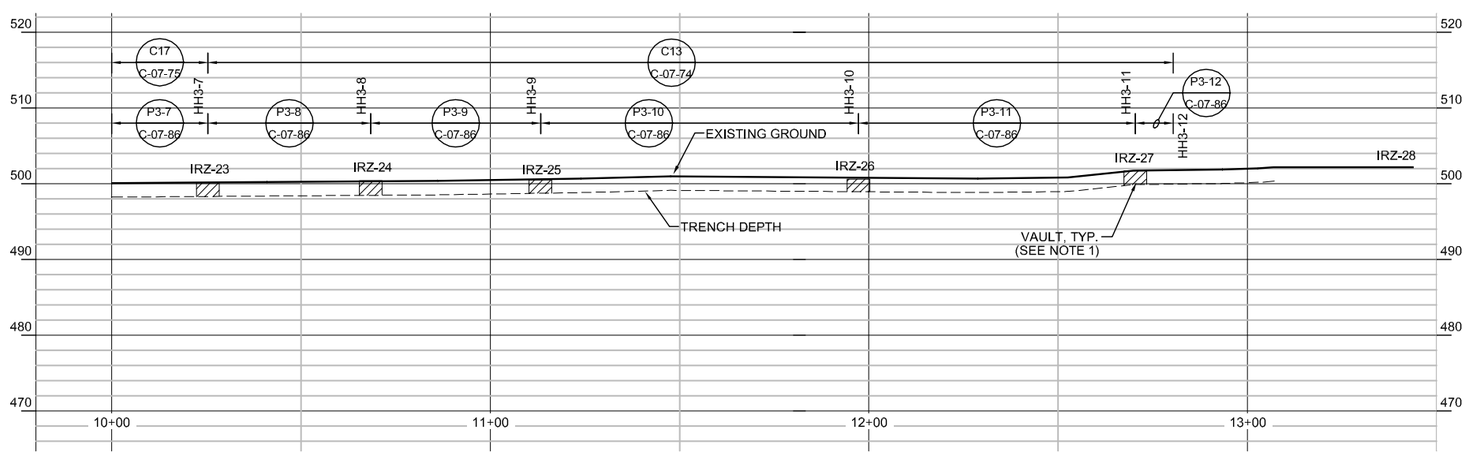

PIPELINE "C" - PROFILE

(SCALE: 1" = 20' H; 1" = 10' V)

- DRAFT -
NOT FOR CONSTRUCTION

ETIC ENGINEERING

ARCADIS

NO.	DATE	DESCRIPTION	GM/SPEC	DWN	CHKD	SUPV	APVD BY
0	04/05/13	INTERMEDIATE (60%) DESIGN SUBMITTAL		AJW	KLD	JPB	JEF

REVISIONS

APPROVED BY: JEF

SO	
SUPV	JPB
DSGN	KLD
DWN	AJW
CHKD	JPB
OK	JEF
DATE	04/05/13
SCALES	1" = 20'

TOPOCK GROUNDWATER REMEDIATION PROJECT
PIPELINE - PLAN AND PROFILE
STA 10+00 TO STA 12+70
PIPELINE "C17" & "C13"
GAS TRANSMISSION & DISTRIBUTION
PACIFIC GAS AND ELECTRIC COMPANY
SAN FRANCISCO, CALIFORNIA

MICROFILM
BILL OF MATL
DWG LIST
SUPSDS
SUPSD BY
SHEET NO. of SHEETS
C-07-26
REV

04/05/2013, 08:39, G:\Graphics\ARTOPOCK-01\Submittal-60%_March2013\HILL Formatted\C-07-23 to 43_Plan&Profile.dwg, Tab: C-07-26

N1808

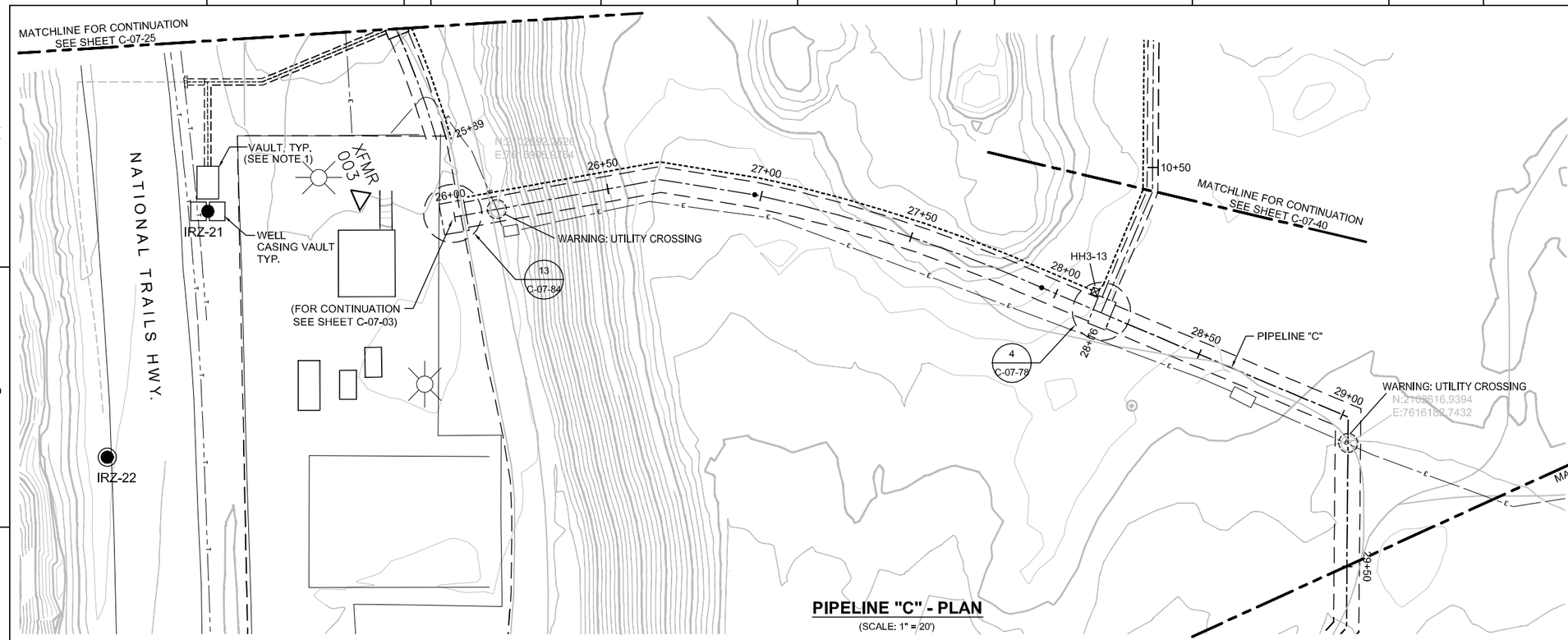

PIPELINE "C" - PLAN

(SCALE: 1" = 20')

NOTES

1. VAULT DETAILS SHOWN ON SHEETS M-X-X AND S-X-X.
2. SEE CONDUIT AND CABLE SCHEDULES AND SINGLE LINE DIAGRAMS ON SHEETS E-00-12 THRU E-00-20.

0 20 40 60
HORIZ: SCALE: 1"=20'

0 10 20 30
VERT: SCALE: 1"=10'

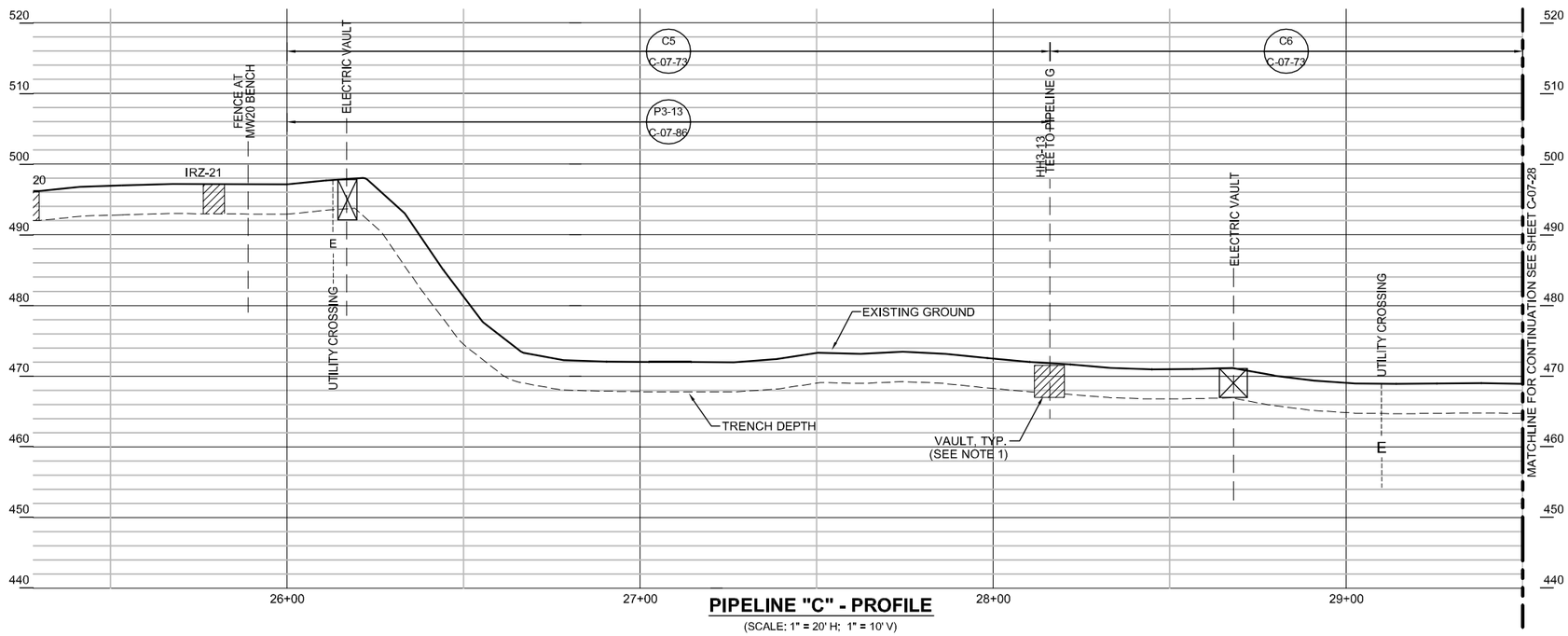

PIPELINE "C" - PROFILE

(SCALE: 1" = 20' H; 1" = 10' V)

- DRAFT -
NOT FOR
CONSTRUCTION

ETIC ENGINEERING

ARCADIS

NO.	DATE	DESCRIPTION	GM/SPEC	DWN	CHKD	SUPV	APVD BY
0	04/05/13	INTERMEDIATE (60%) DESIGN SUBMITTAL		AJW	KLD	JPB	JEF

REVISIONS

APPROVED BY	
JEF	SO
	SUPV JPB
	DSGN KLD
	DWN AJW
	CHKD JPB
	OK JEF
	DATE 04/05/13
	SCALES 1" = 20'

TOPOCK GROUNDWATER REMEDIATION PROJECT

PIPELINE - PLAN AND PROFILE
STA 26+00 TO STA 29+50
PIPELINE "C6 & C7"

GAS TRANSMISSION & DISTRIBUTION
PACIFIC GAS AND ELECTRIC COMPANY
SAN FRANCISCO, CALIFORNIA

MICROFILM
BILL OF MATL
DWG LIST
SUPSDS
SUPSD BY
SHEET NO. of SHEETS
C-07-27
REV

04/05/2013, 08:39, G:\Graphics\ARTOPOCK-01\Submittal-60%_March2013\HILL Formatted\C-07-23 to 43_Plan&Profile.dwg, Tab: C-07-27

N1808

NOTES
1. VAULT DETAILS SHOWN ON SHEETS M-X-X AND S-X-X.
2. SEE CONDUIT AND CABLE SCHEDULES AND SINGLE LINE DIAGRAMS ON SHEETS E-00-12 THRU E-00-20.

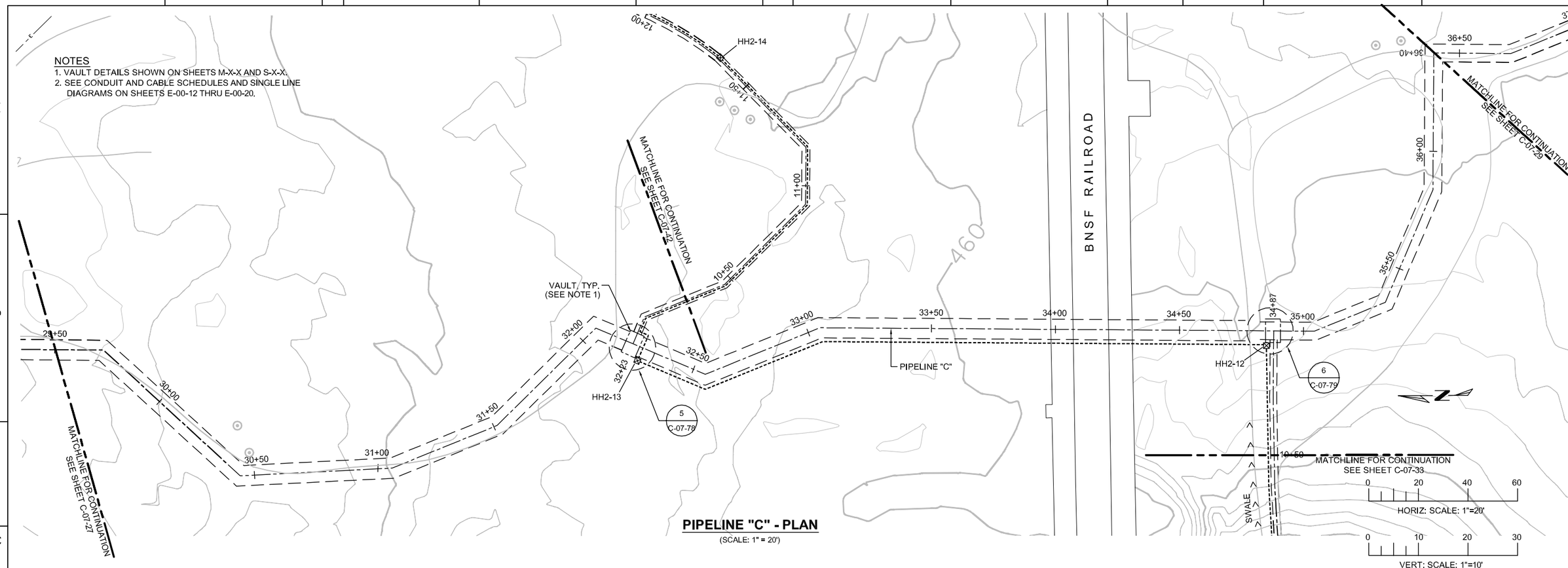

PIPELINE "C" - PLAN

(SCALE: 1" = 20')

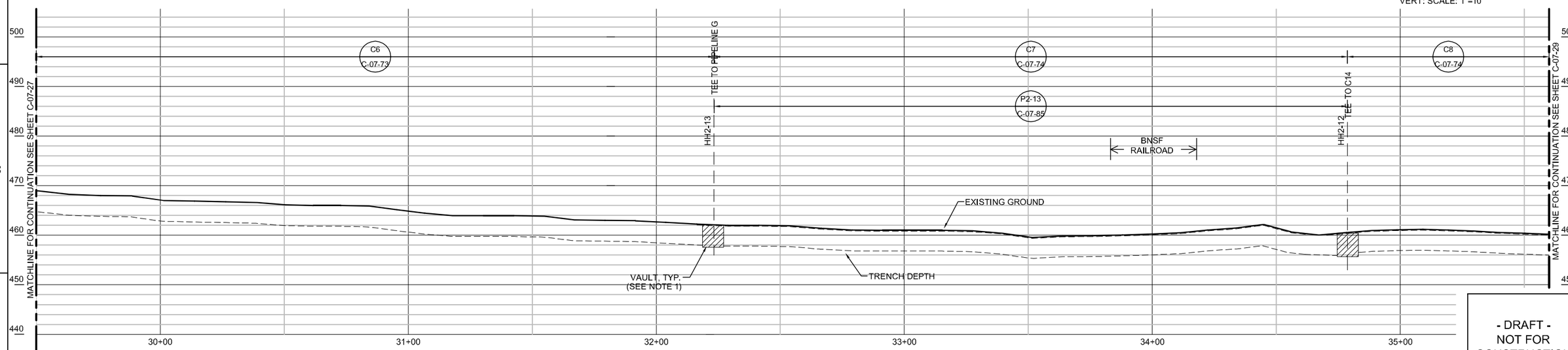

PIPELINE "C" - PROFILE

(SCALE: 1" = 20' H; 1" = 10' V)

- DRAFT -
NOT FOR CONSTRUCTION

ETIC ENGINEERING

ARCADIS

NO.	DATE	DESCRIPTION	GM/SPEC	DWN	CHKD	SUPV	APVD BY
0	04/05/13	INTERMEDIATE (60%) DESIGN SUBMITTAL		AJW	KLD	JPB	JEF

REVISIONS

APPROVED BY	SO
JEF	SUPV JPB
	DSGN KLD
	DWN AJW
	CHKD JPB
	OK JEF
	DATE 04/05/13
	SCALES 1" = 20'

TOPOCK GROUNDWATER REMEDIATION PROJECT
PIPELINE - PLAN AND PROFILE
STA 29+50 TO 35+60
PIPELINE "C7", "C8" & "C9"
GAS TRANSMISSION & DISTRIBUTION
PACIFIC GAS AND ELECTRIC COMPANY
SAN FRANCISCO, CALIFORNIA

MICROFILM
BILL OF MATL
DWG LIST
SUPSDS
SUPSD BY
SHEET NO. of SHEETS
C-07-28
REV

04/05/2013, 08:39, G:\Graphics\ARTOPOCK-01\Submittal-60%_March-2013\HILL Formatted\C-07-23 to 43_Plan&Profile.dwg, Tab: C-07-28

NOTES
1. VAULT DETAILS SHOWN ON SHEETS M-X-X AND S-X-X.
2. SEE CONDUIT AND CABLE SCHEDULES AND SINGLE LINE DIAGRAMS ON SHEETS E-00-12 THRU E-00-20.

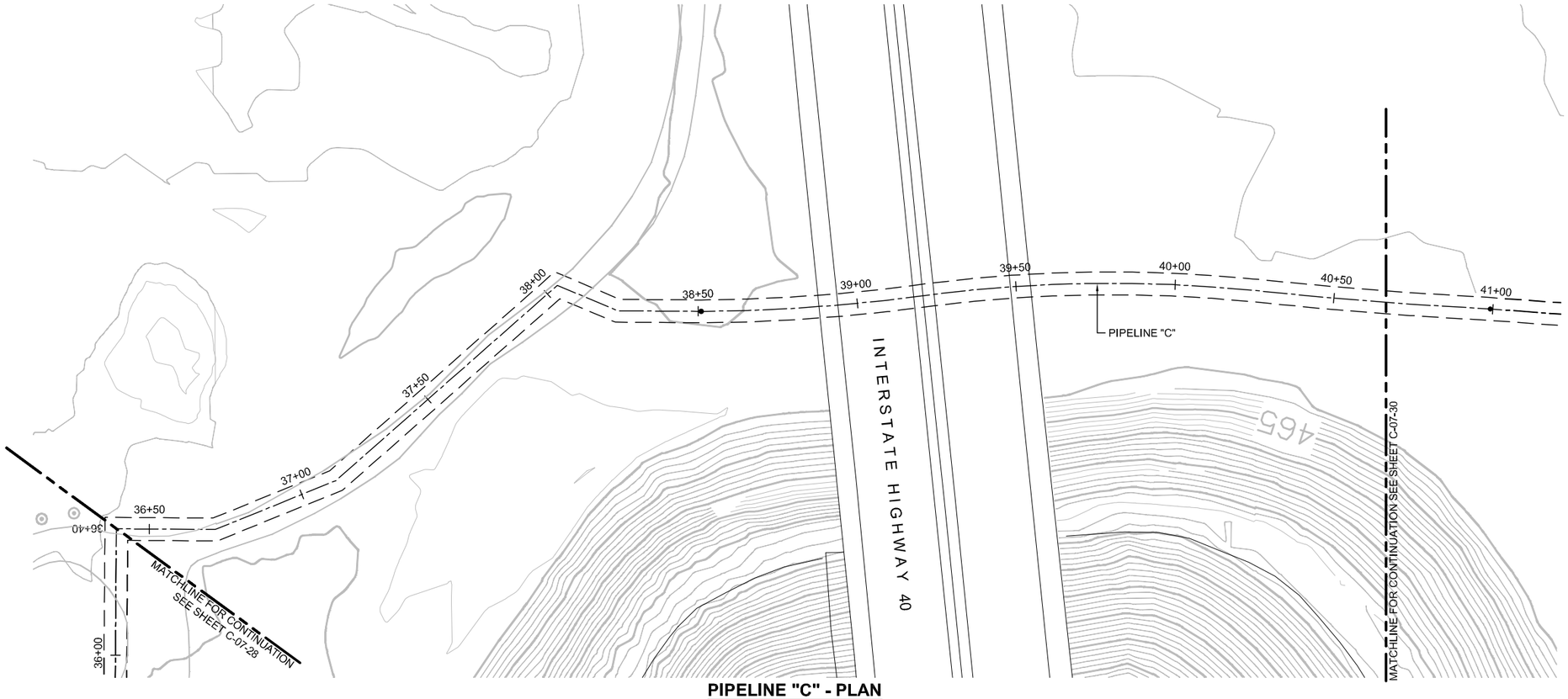

PIPELINE "C" - PLAN

(SCALE: 1" = 20')

0 20 40 60
HORIZ: SCALE: 1"=20'

0 10 20 30
VERT: SCALE: 1"=10'

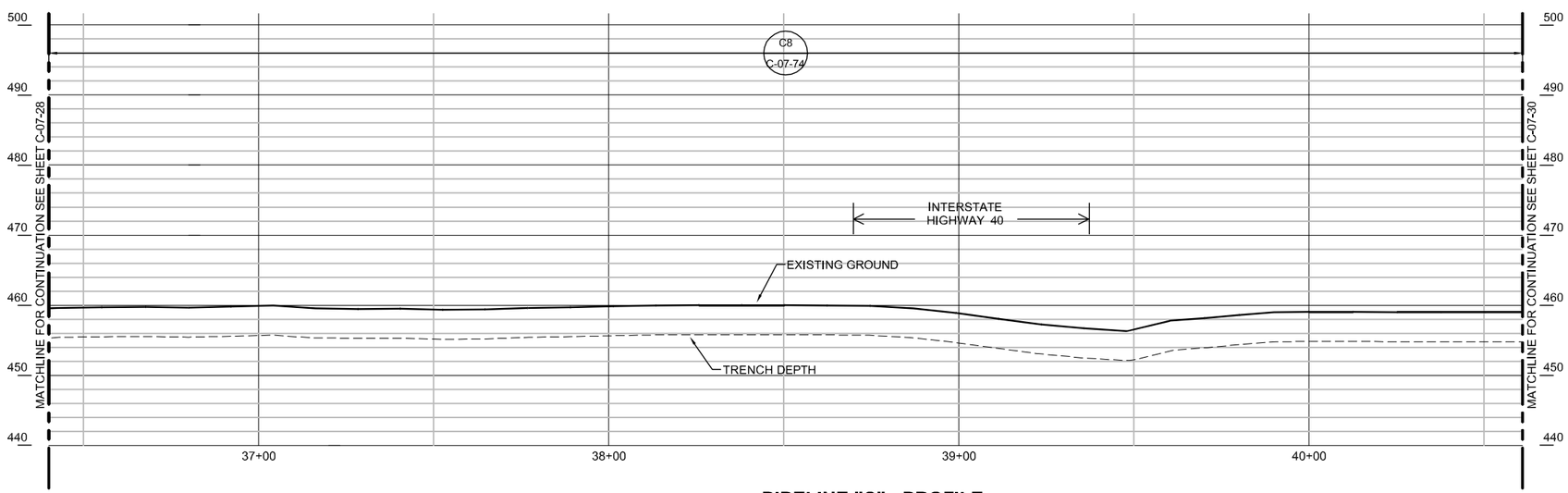

PIPELINE "C" - PROFILE

(SCALE: 1" = 20' H; 1" = 10' V)

- DRAFT -
NOT FOR CONSTRUCTION

ETIC ENGINEERING

ARCADIS

NO.	DATE	DESCRIPTION	GM/SPEC	DWN	CHKD	SUPV	APVD BY
0	04/05/13	INTERMEDIATE (60%) DESIGN SUBMITTAL		AJW	KLD	JPB	JEF

REVISIONS

APPROVED BY	
JEF	SO
	SUPV JPB
	DSGN KLD
	DWN AJW
	CHKD JPB
	OK JEF
	DATE 04/05/13
	SCALES 1" = 20'

TOPOCK GROUNDWATER REMEDIATION PROJECT
PIPELINE - PLAN AND PROFILE
STA 36+40 TO STA 40+60
PIPELINE "C9"
GAS TRANSMISSION & DISTRIBUTION
PACIFIC GAS AND ELECTRIC COMPANY
SAN FRANCISCO, CALIFORNIA

MICROFILM
BILL OF MATL
DWG LIST
SUPSDS
SUPSD BY
SHEET NO. of SHEETS
C-07-29
REV

04/05/2013, 08:40, G:\Graphics\ARI\TOPOCK-01\Submittal-60%_March2013\HILL Formatted\C-07-23 to 43_Plan&Profile.dwg, Tab: C-07-29

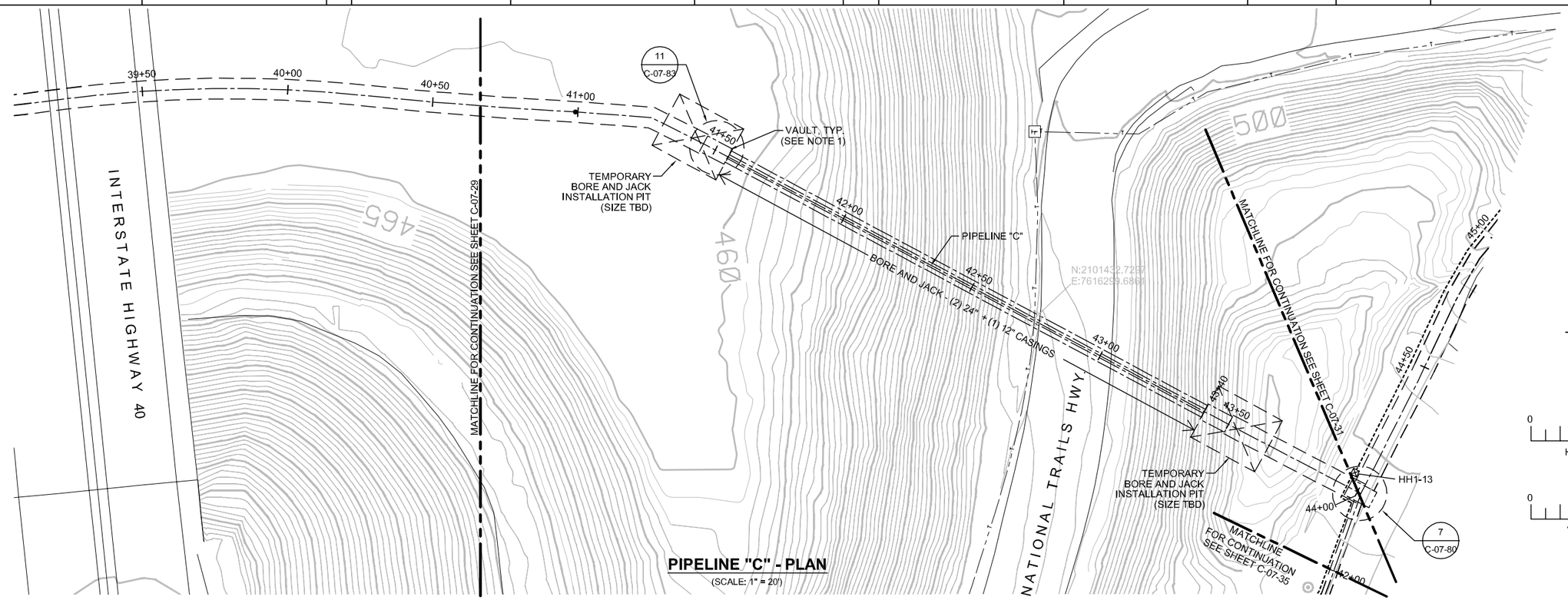

PIPELINE "C" - PLAN

(SCALE: 1" = 20')

NOTES

1. VAULT DETAILS SHOWN ON SHEETS M-X-X AND S-X-X.
2. SEE CONDUIT AND CABLE SCHEDULES AND SINGLE LINE DIAGRAMS ON SHEETS E-00-12 THRU E-00-20.

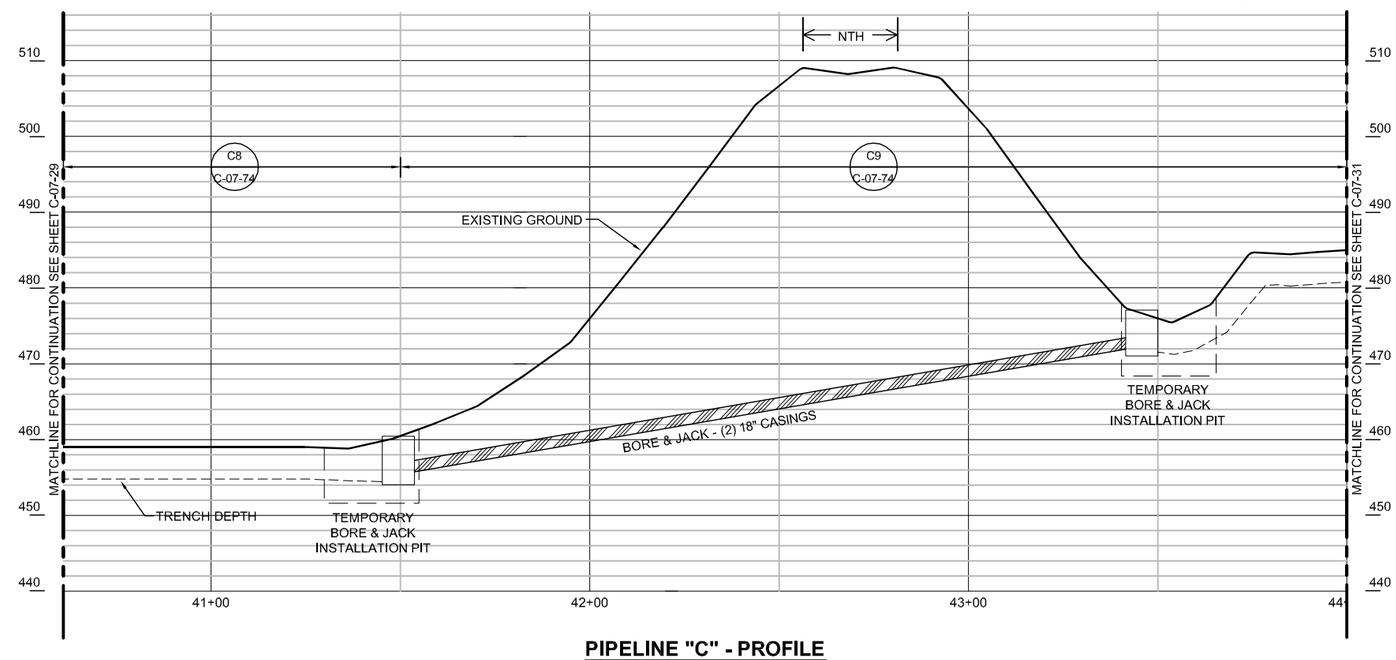

PIPELINE "C" - PROFILE

(SCALE: 1" = 20' H; 1" = 10' V)

- DRAFT -
NOT FOR
CONSTRUCTION

ETIC ENGINEERING

ARCADIS

NO.	DATE	DESCRIPTION	GM/SPEC	DWN	CHKD	SUPV	APVD BY
0	04/05/13	INTERMEDIATE (60%) DESIGN SUBMITTAL		AJW	KLD	JPB	JEF

REVISIONS

APPROVED BY		
JEF	SO	
	SUPV	JPB
	DSGN	KLD
	DWN	AJW
	CHKD	JPB
	OK	JEF
	DATE	04/05/13
	SCALES	1" = 20'

TOPOCK GROUNDWATER REMEDIATION PROJECT

PIPELINE - PLAN AND PROFILE
STA 40+60 TO STA 44+00
PIPELINE "C9A"

GAS TRANSMISSION & DISTRIBUTION

PACIFIC GAS AND ELECTRIC COMPANY
SAN FRANCISCO, CALIFORNIA

MICROFILM	
BILL OF MATL	
DWG LIST	
SUPSDS	
SUPSD BY	
SHEET NO. of SHEETS	
C-07-30	REV

04/05/2013, 08:40, G:\Graphics\ARI\TOPOCK-01\Submittal-60%_March2013\HILL Formatted\C-07-23 to 43_Plan&Profile.dwg, Tab: C-07-30

N1808

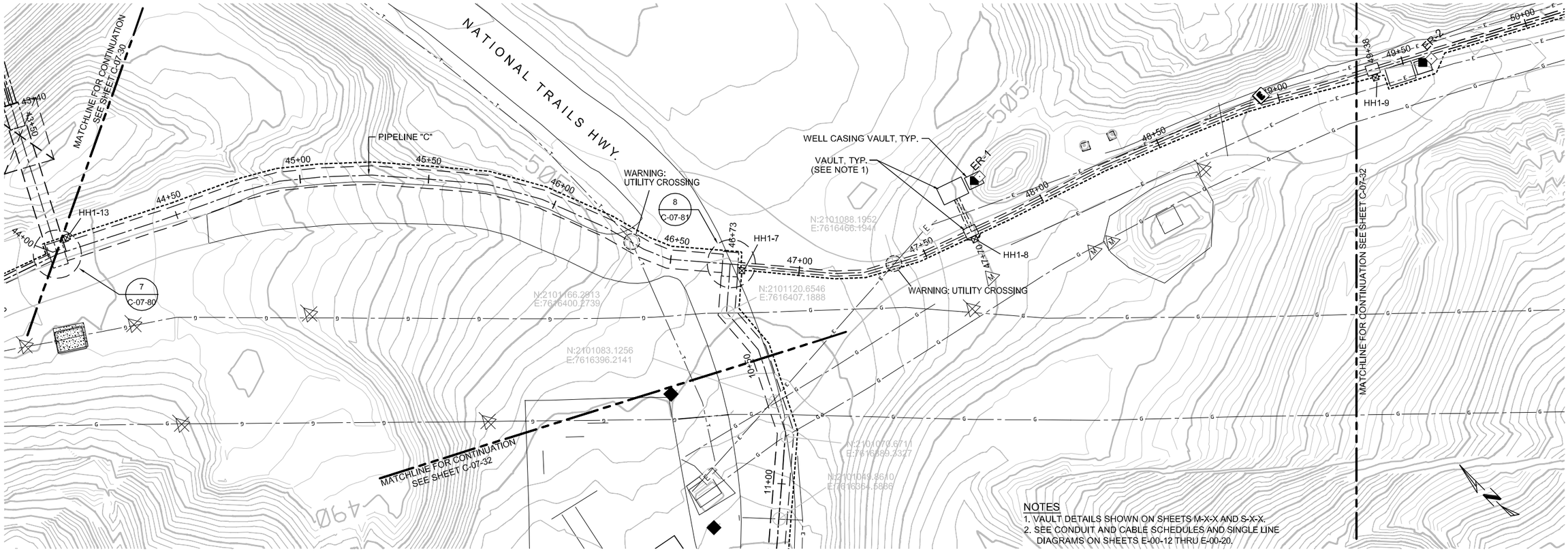

PIPELINE "C" - PLAN

(SCALE: 1" = 20')

HORIZ: SCALE: 1"=20'

VERT: SCALE: 1"=10'

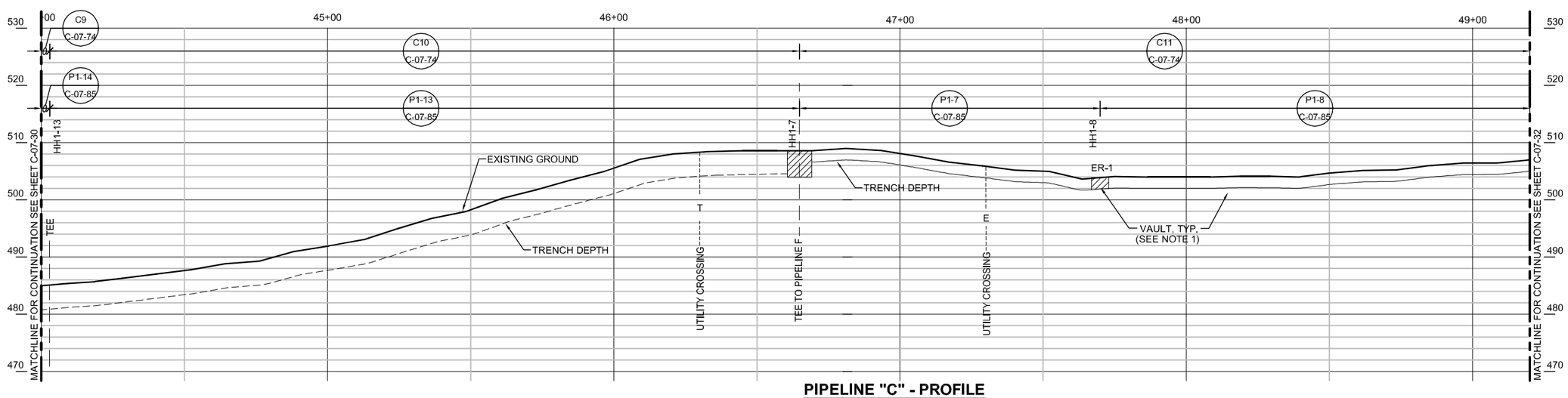

PIPELINE "C" - PROFILE

(SCALE: 1" = 20' H; 1" = 10' V)

- DRAFT -
NOT FOR CONSTRUCTION

ETIC ENGINEERING

ARCADIS

NO.	DATE	DESCRIPTION	GM/SPEC	DWN	CHKD	SUPV	APVD BY
0	04/05/13	INTERMEDIATE (60%) DESIGN SUBMITTAL		AJW	KLD	JPB	JEF

REVISIONS

APPROVED BY	
JEF	

SO	
SUPV	JPB
DSGN	KLD
DWN	AJW
CHKD	JPB
OK	JEF
DATE	04/05/13
SCALES	1" = 20'

TOPOCK GROUNDWATER REMEDIATION PROJECT

PIPELINE - PLAN AND PROFILE
STA 44+00 TO STA 49+20
PIPELINE "C10" & "C11"

GAS TRANSMISSION & DISTRIBUTION

PACIFIC GAS AND ELECTRIC COMPANY
SAN FRANCISCO, CALIFORNIA

MICROFILM	
BILL OF MATL	
DWG LIST	
SUPSDS	
SUPSD BY	
SHEET NO. of SHEETS	
C-07-31	REV

04/05/2013, 08:41, G:\Graphics\AR\TOPOCK\-01\Submittal-60%_March2013\HILL Formatted\C-07-23 to 43_Plan&Profile.dwg, Tab: C-07-31

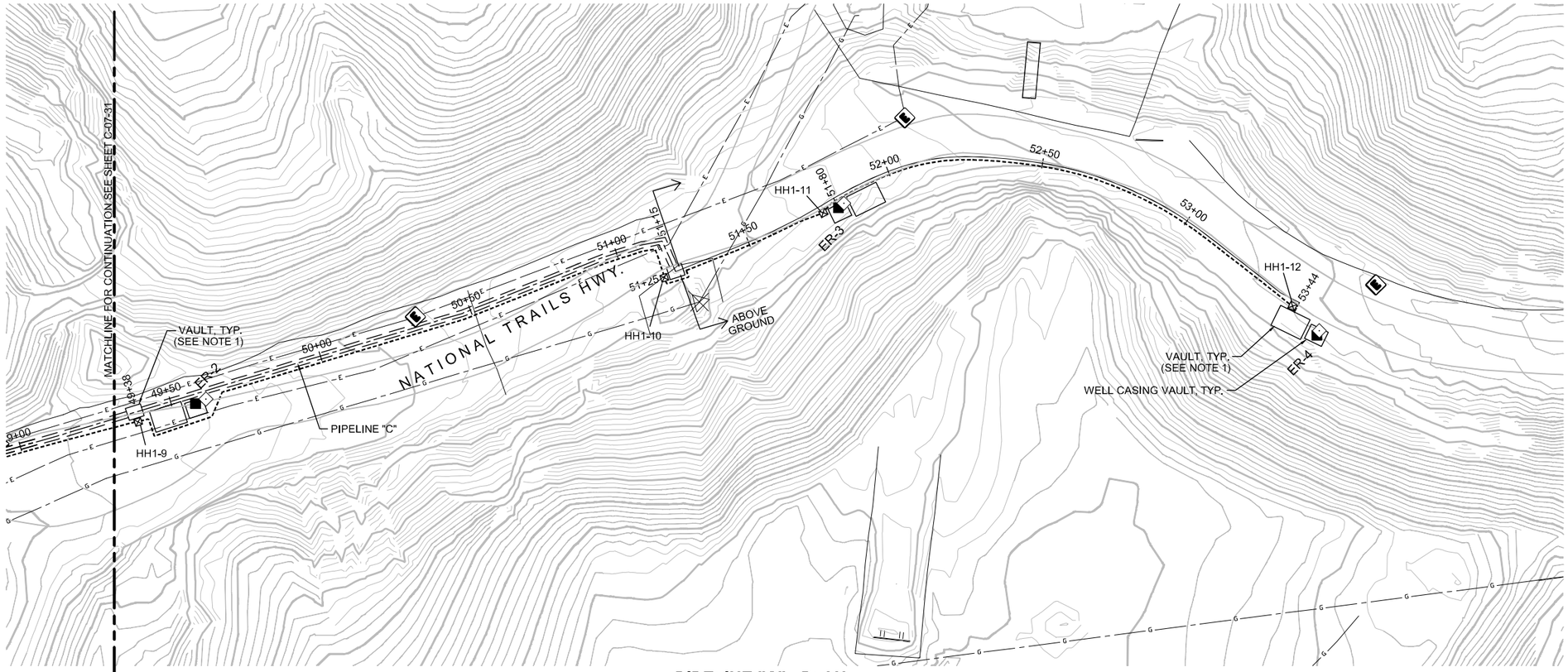

PIPELINE "C" - PLAN

(SCALE: 1" = 20')

NOTES

1. VAULT DETAILS SHOWN ON SHEETS M-X-X AND S-X-X.
2. SEE CONDUIT AND CABLE SCHEDULES AND SINGLE LINE DIAGRAMS ON SHEETS E-00-12 THRU E-00-20.

0 20 40 60
HORIZ: SCALE: 1"=20'

0 10 20 30
VERT: SCALE: 1"=10'

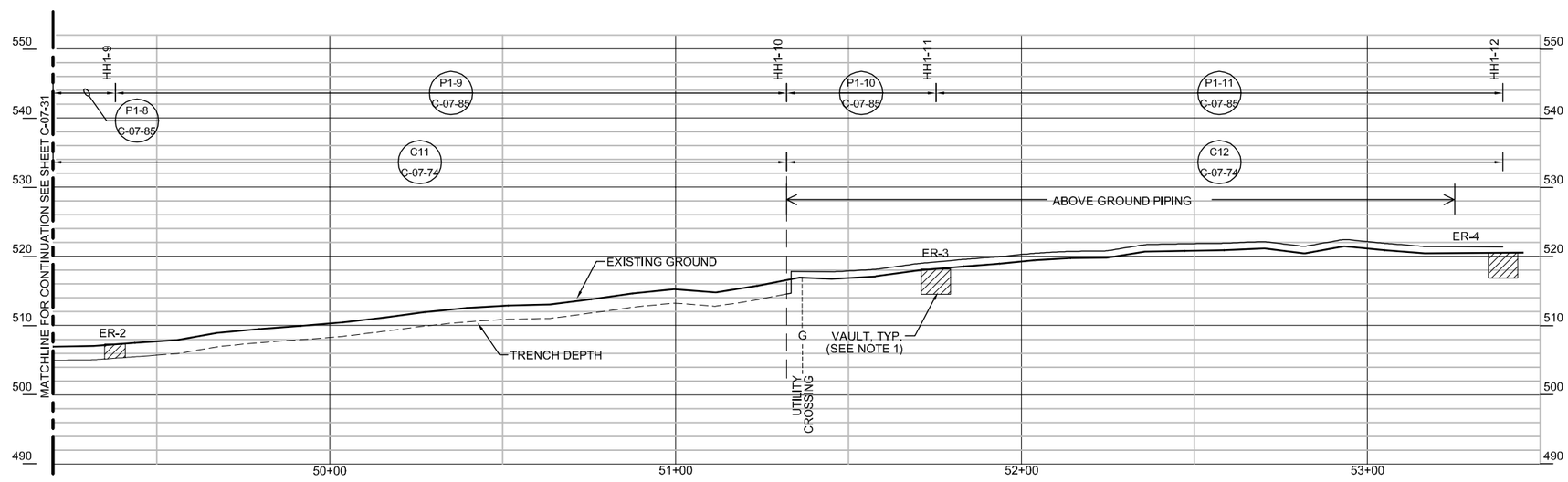

PIPELINE "C" - PROFILE

(SCALE: 1" = 20' H; 1" = 10' V)

- DRAFT -
NOT FOR CONSTRUCTION

ETIC ENGINEERING

ARCADIS

NO.	DATE	DESCRIPTION	GM/SPEC	DWN	CHKD	SUPV	APVD BY
0	04/05/13	INTERMEDIATE (60%) DESIGN SUBMITTAL		AJW	KLD	JPB	JEF

REVISIONS

APPROVED BY: JEF

SO	
SUPV	JPB
DSGN	KLD
DWN	AJW
CHKD	JPB
OK	JEF
DATE	04/05/13
SCALES	1" = 20'

TOPOCK GROUNDWATER REMEDIATION PROJECT

PIPELINE - PLAN AND PROFILE
STA 49+20 TO STA 53+30
PIPELINE "C11" & "C12"

GAS TRANSMISSION & DISTRIBUTION
PACIFIC GAS AND ELECTRIC COMPANY
SAN FRANCISCO, CALIFORNIA

MICROFILM
BILL OF MATL
DWG LIST
SUPSDS
SUPSD BY
SHEET NO. of SHEETS
C-07-32
REV

04/05/2013, 08:41, G:\Graphics\ARITOPOCK-01\Submittal-60%_March2013\HILL Formatted\C-07-23 to 43_Plan&Profile.dwg, Tab: C-07-32

N1808

PIPELINE "C" - PLAN

(SCALE: 1" = 20')

HORIZ: SCALE: 1"=20'

VERT: SCALE: 1"=10'

NOTES
1. VAULT DETAILS SHOWN ON SHEETS M-X-X AND S-X-X.
2. SEE CONDUIT AND CABLE SCHEDULES AND SINGLE LINE DIAGRAMS ON SHEETS E-00-12 THRU E-00-20.

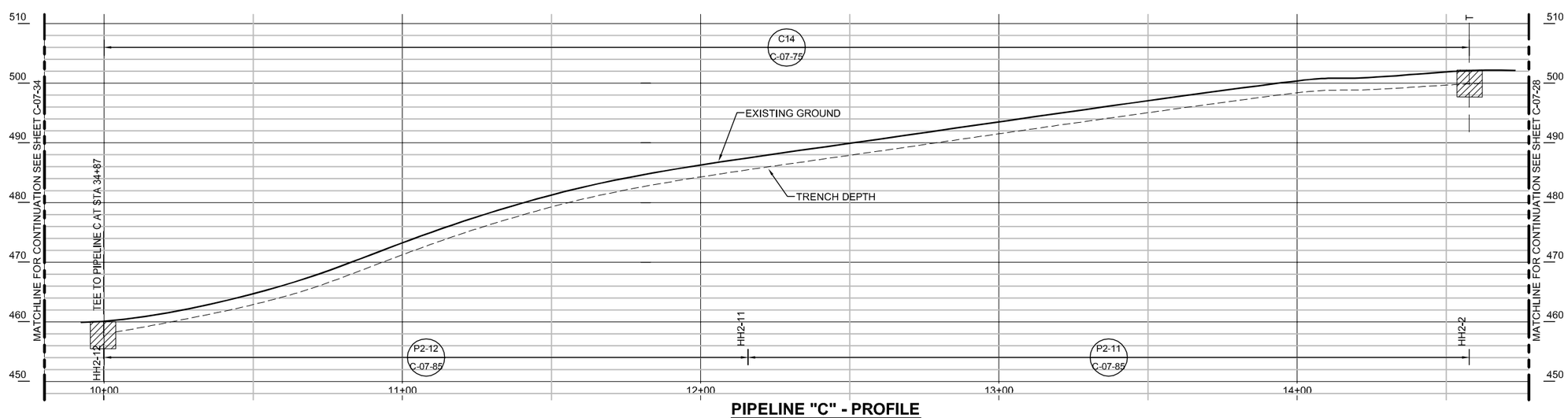

PIPELINE "C" - PROFILE

(SCALE: 1" = 20' H; 1" = 10' V)

- DRAFT -
NOT FOR CONSTRUCTION

ETIC ENGINEERING

ARCADIS

NO.	DATE	DESCRIPTION	GM/SPEC	DWN	CHKD	SUPV	APVD BY
0	04/05/13	INTERMEDIATE (60%) DESIGN SUBMITTAL		AJW	KLD	JPB	JEF

REVISIONS

APPROVED BY: JEF

SO	
SUPV	JPB
DSGN	KLD
DWN	AJW
CHKD	JPB
OK	JEF
DATE	04/05/13
SCALES	1" = 20'

TOPOCK GROUNDWATER REMEDIATION PROJECT

PIPELINE - PLAN AND PROFILE
STA 10+00 TO STA 14+79
PIPELINE "C14"

GAS TRANSMISSION & DISTRIBUTION
PACIFIC GAS AND ELECTRIC COMPANY
SAN FRANCISCO, CALIFORNIA

MICROFILM
BILL OF MATL
DWG LIST
SUPSDS
SUPSD BY
SHEET NO. of SHEETS
C-07-33
REV

04/05/2013, 08:42, G:\Graphics\AR\TOPOCK-01\Submittal\60%_March2013\HILL Formatted\C-07-23 to 43_Plan&Profile.dwg, Tab: C-07-33

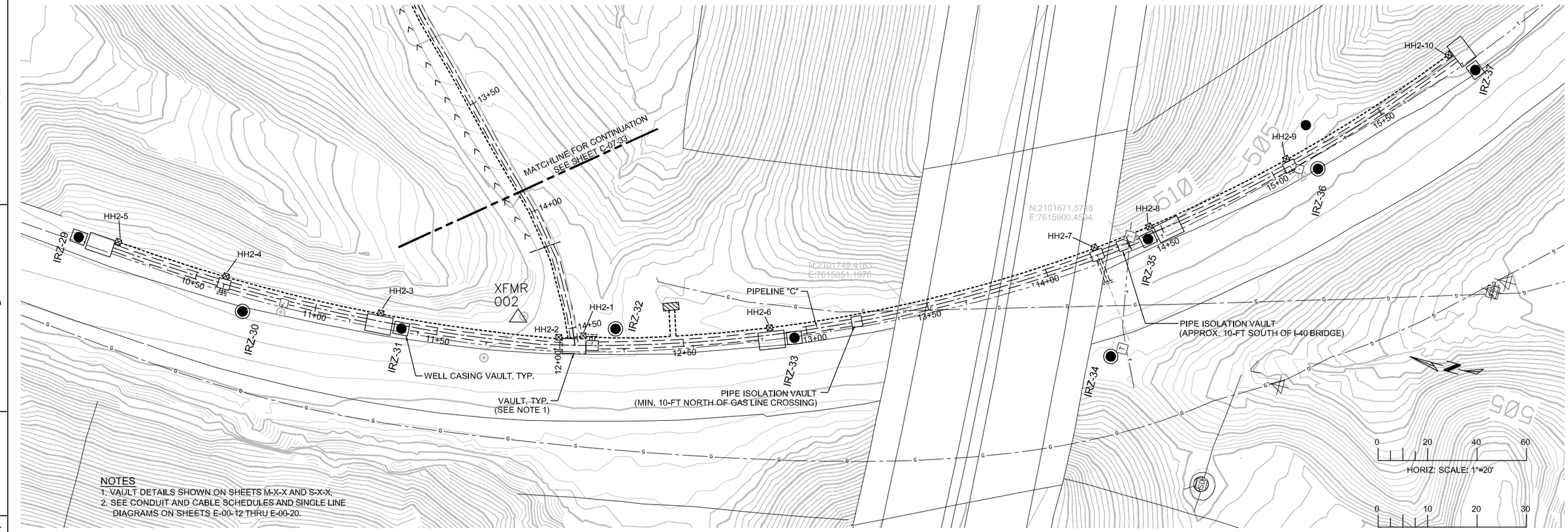

NOTES
1. VAULT DETAILS SHOWN ON SHEETS M-X-X AND S-X-X.
2. SEE CONDUIT AND CABLE SCHEDULES AND SINGLE LINE DIAGRAMS ON SHEETS E-00-12 THRU E-00-20.

PIPELINE "C" - PLAN

(SCALE: 1" = 20')

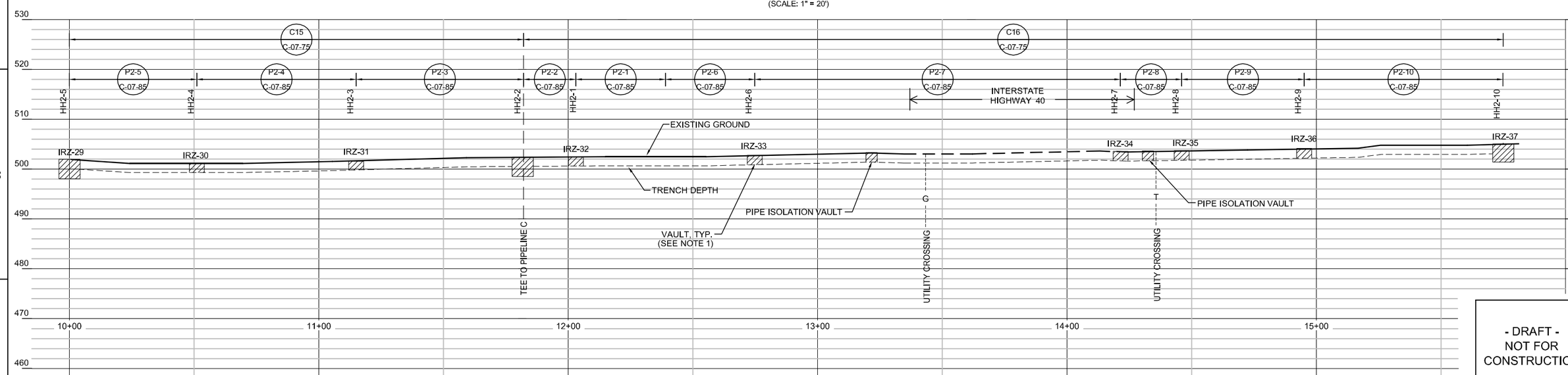

PIPELINE "C" - PROFILE

(SCALE: 1" = 20' H; 1" = 10' V)

- DRAFT -
NOT FOR CONSTRUCTION

ETIC ENGINEERING

ARCADIS

NO.	DATE	DESCRIPTION	GM/SPEC	DWN	CHKD	SUPV	APVD BY
0	04/05/13	INTERMEDIATE (60%) DESIGN SUBMITTAL		AJW	KLD	JPB	JEF

REVISIONS

APPROVED BY: JEF

SO	
SUPV	JPB
DSGN	KLD
DWN	AJW
CHKD	JPB
OK	JEF
DATE	04/05/13
SCALES	1" = 20'

TOPOCK GROUNDWATER REMEDIATION PROJECT

PIPELINE - PLAN AND PROFILE STA 10+00 TO STA 15+80 PIPELINE " C15" & "C16"

GAS TRANSMISSION & DISTRIBUTION
PACIFIC GAS AND ELECTRIC COMPANY
SAN FRANCISCO, CALIFORNIA

MICROFILM
BILL OF MATL
DWG LIST
SUPSDS
SUPSD BY
SHEET NO. of SHEETS
C-07-34
REV

04/05/2013, 08:42, G:\Graphics\ARTOPOCK-01\Submittal-60%_March2013\HILL Formatted\C-07-23 to 43_Plan&Profile.dwg, Tab: C-07-34

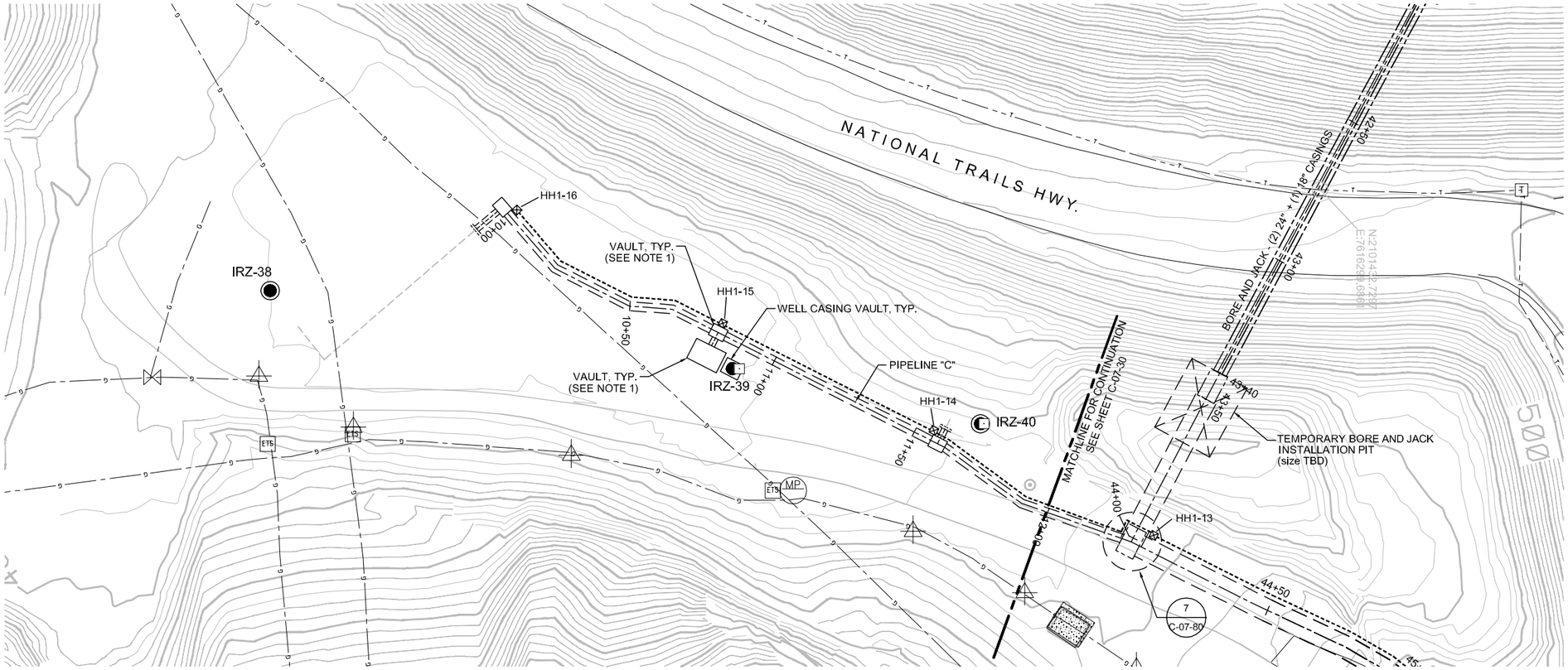

PIPELINE "C" - PLAN

(SCALE: 1" = 20')

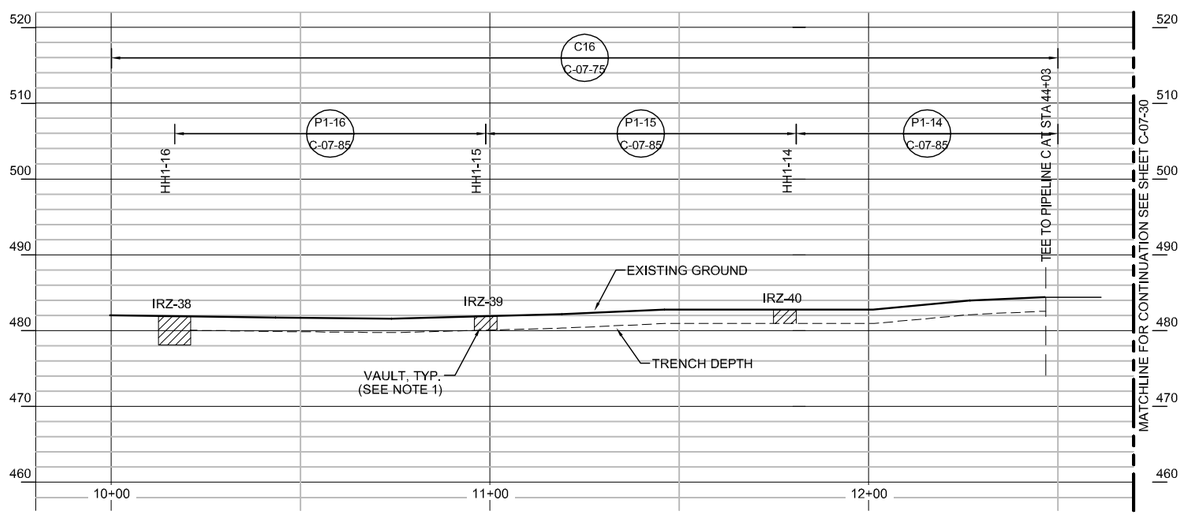

PIPELINE "C" - PROFILE

(SCALE: 1" = 20' H; 1" = 10' V)

NOTES
1. VAULT DETAILS SHOWN ON SHEETS M-X-X AND S-X-X.
2. SEE CONDUIT AND CABLE SCHEDULES AND SINGLE LINE DIAGRAMS ON SHEETS E-00-12 THRU E-00-20.

0 20 40 60
HORIZ: SCALE: 1"=20'

0 10 20 30
VERT: SCALE: 1"=10'

- DRAFT -
NOT FOR CONSTRUCTION

ETIC ENGINEERING

ARCADIS

NO.	DATE	DESCRIPTION	GM/SPEC	DWN	CHKD	SUPV	APVD BY
0	04/05/13	INTERMEDIATE (60%) DESIGN SUBMITTAL		AJW	KLD	JPB	JEF

REVISIONS

APPROVED BY: JEF

SO	
SUPV	JPB
DSGN	KLD
DWN	AJW
CHKD	JPB
OK	JEF
DATE	04/05/13
SCALES	1" = 20'

TOPOCK GROUNDWATER REMEDIATION PROJECT

PIPELINE - PLAN AND PROFILE
STA 10+00 TO STA 12+50
PIPELINE "C16"

GAS TRANSMISSION & DISTRIBUTION
PACIFIC GAS AND ELECTRIC COMPANY
SAN FRANCISCO, CALIFORNIA

MICROFILM
BILL OF MATL
DWG LIST
SUPSDS
SUPSD BY
SHEET NO. of SHEETS
C-07-35
REV

04/05/2013, 08:43, G:\Graphics\ARTOPOCK-01\Submittal-60%_March2013\HILL Formatted\C-07-23 to 43_Plan&Profile.dwg, Tab: C-07-35

N1808

NOTES
1. VAULT DETAILS SHOWN ON SHEETS M-X-X AND S-X-X.
2. SEE CONDUIT AND CABLE SCHEDULES AND SINGLE LINE DIAGRAMS ON SHEETS E-00-12 THRU E-00-20.

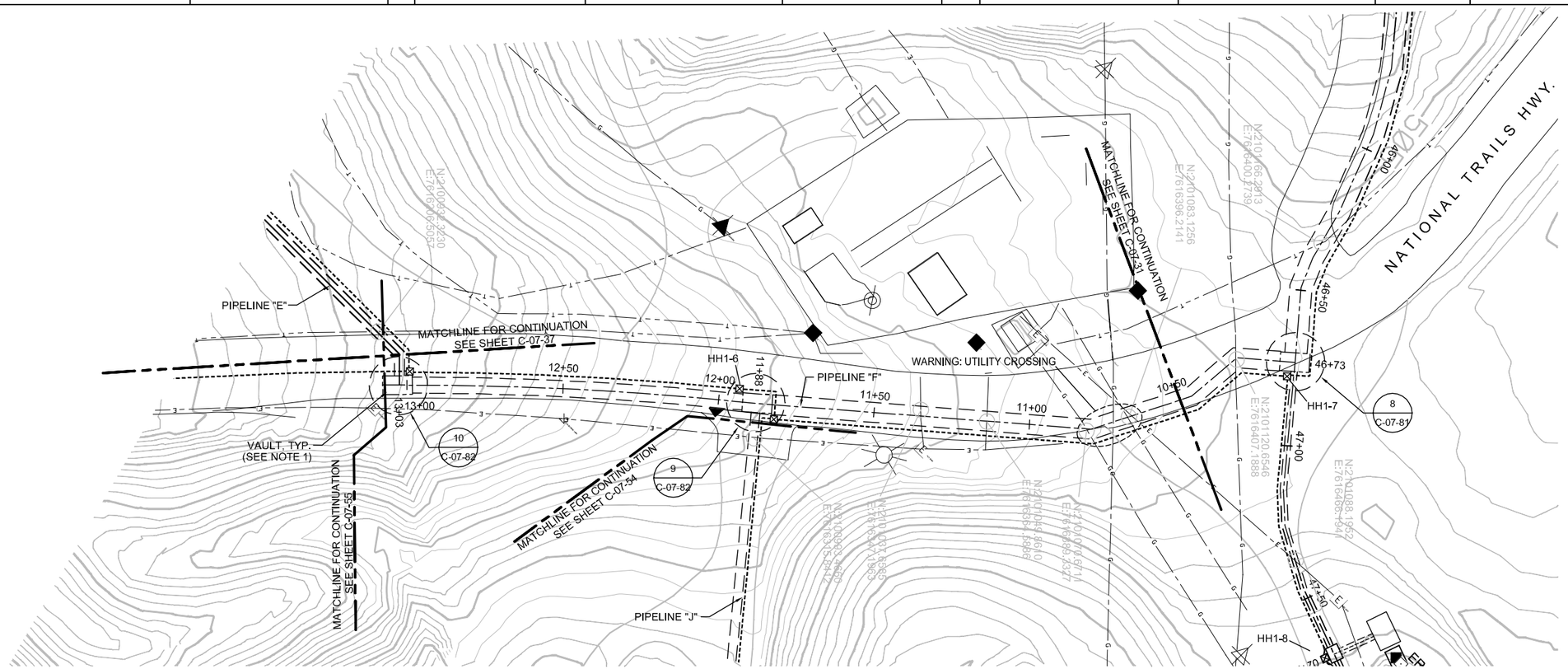

PIPELINE "F" - PLAN

(SCALE: 1" = 20')

0 20 40 60
HORIZ: SCALE: 1"=20'

0 10 20 30
VERT: SCALE: 1"=10'

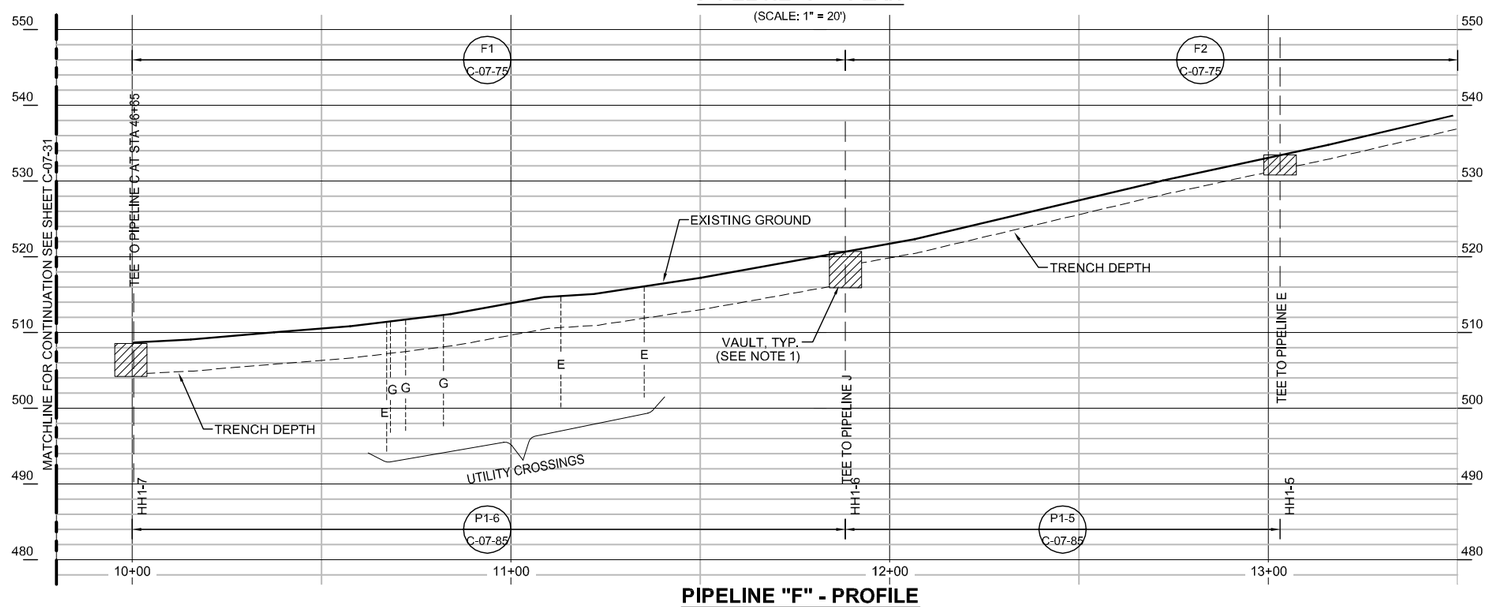

PIPELINE "F" - PROFILE

(SCALE: 1" = 20' H; 1" = 10' V)

- DRAFT -
NOT FOR
CONSTRUCTION

ETIC ENGINEERING

ARCADIS

NO.	DATE	DESCRIPTION	GM/SPEC	DWN	CHKD	SUPV	APVD BY
0	04/05/13	INTERMEDIATE (60%) DESIGN SUBMITTAL		AJW	KLD	JPB	JEF

REVISIONS

APPROVED BY: JEF

SO	
SUPV	JPB
DSGN	KLD
DWN	AJW
CHKD	JPB
OK	JEF
DATE	04/05/13
SCALES	1" = 20'

TOPOCK GROUNDWATER REMEDIATION PROJECT
PIPELINE - PLAN AND PROFILE
STA 10+00 TO STA 13+50
PIPELINE "F"
GAS TRANSMISSION & DISTRIBUTION
PACIFIC GAS AND ELECTRIC COMPANY
SAN FRANCISCO, CALIFORNIA

MICROFILM
BILL OF MATL
DWG LIST
SUPSDS
SUPSD BY
SHEET NO. of SHEETS
C-07-36
REV

04/05/2013, 08:43, G:\Graphics\AR\TOPOCK-01\Submittal-60%_March2013\HILL Formatted\C-07-23 to 43_Plan&Profile.dwg, Tab: C-07-36

PIPELINE "E" - PLAN

(SCALE: 1" = 20')

NOTES
1. VAULT DETAILS SHOWN ON SHEETS M-X-X AND S-X-X.
2. SEE CONDUIT AND CABLE SCHEDULES AND SINGLE LINE DIAGRAMS ON SHEETS E-00-12 THRU E-00-20.

N

0 20 40 60
HORIZ: SCALE: 1"=20'

0 10 20 30
VERT: SCALE: 1"=10'

NOTE:
FINAL LOCATIONS OF REMEDY BUILDINGS, WELLS, AND PIPELINE E WILL BE PRESENTED IN THE 90% DESIGN DRAWINGS.

10+00 11+00 12+00 13+00 14+00

PIPELINE "E" - PROFILE

(SCALE: 1" = 20' H; 1" = 10' V)

- DRAFT -
NOT FOR CONSTRUCTION

ETIC ENGINEERING

ARCADIS

NO.	DATE	DESCRIPTION	GM/SPEC	DWN	CHKD	SUPV	APVD BY
0	04/05/13	INTERMEDIATE (60%) DESIGN SUBMITTAL		AJW	KLD	JPB	JEF

REVISIONS

APPROVED BY: JEF

SO	
SUPV	JPB
DSGN	KLD
DWN	AJW
CHKD	JPB
OK	JEF
DATE	04/05/13
SCALES	1" = 20'

TOPOCK GROUNDWATER REMEDIATION PROJECT
PIPELINE - PLAN AND PROFILE
STA 10+00 TO STA 14+60
PIPELINE "E"
GAS TRANSMISSION & DISTRIBUTION
PACIFIC GAS AND ELECTRIC COMPANY
SAN FRANCISCO, CALIFORNIA

MICROFILM
BILL OF MATL
DWG LIST
SUPSDS
SUPSD BY
SHEET NO. of SHEETS
C-07-37
REV

04/05/2013, 08:44, G:\Graphics\AR\TOPOCK-01\Submittal-60%_March2013\HILL Formatted\C-07-23 to 43_Plan&Profile.dwg, Tab: C-07-37

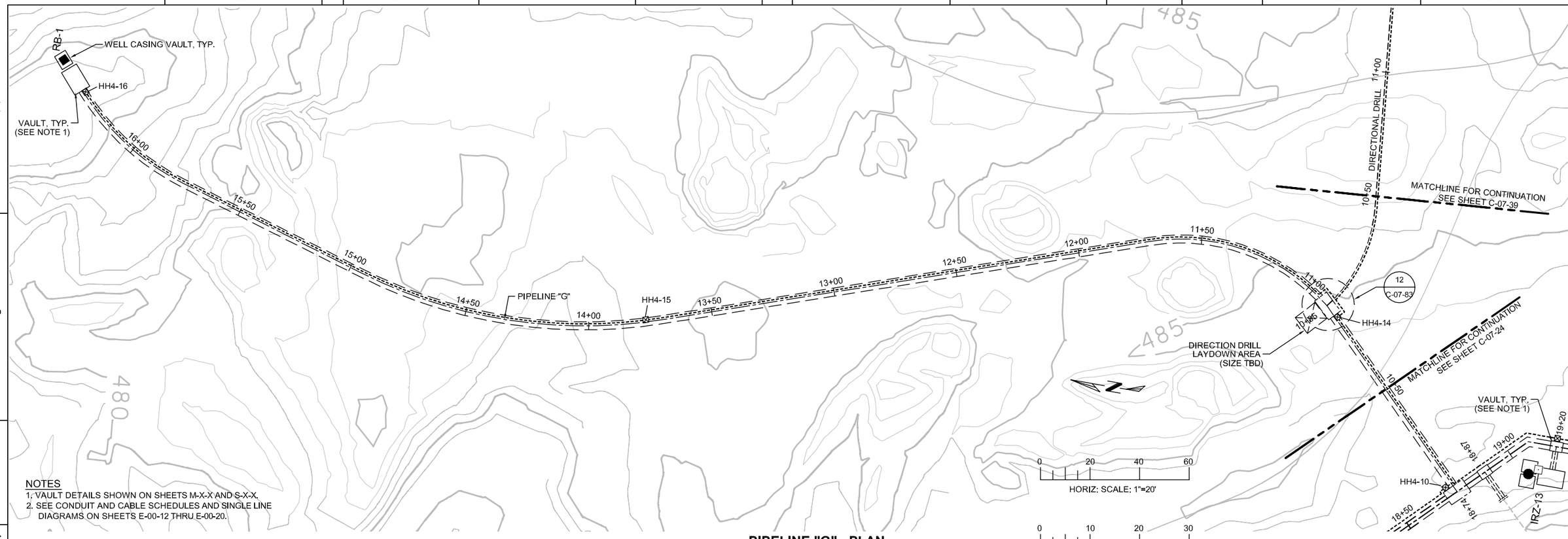

NOTES
1. VAULT DETAILS SHOWN ON SHEETS M-X-X AND S-X-X.
2. SEE CONDUIT AND CABLE SCHEDULES AND SINGLE LINE DIAGRAMS ON SHEETS E-00-12 THRU E-00-20.

PIPELINE "G" - PLAN

(SCALE: 1" = 20')

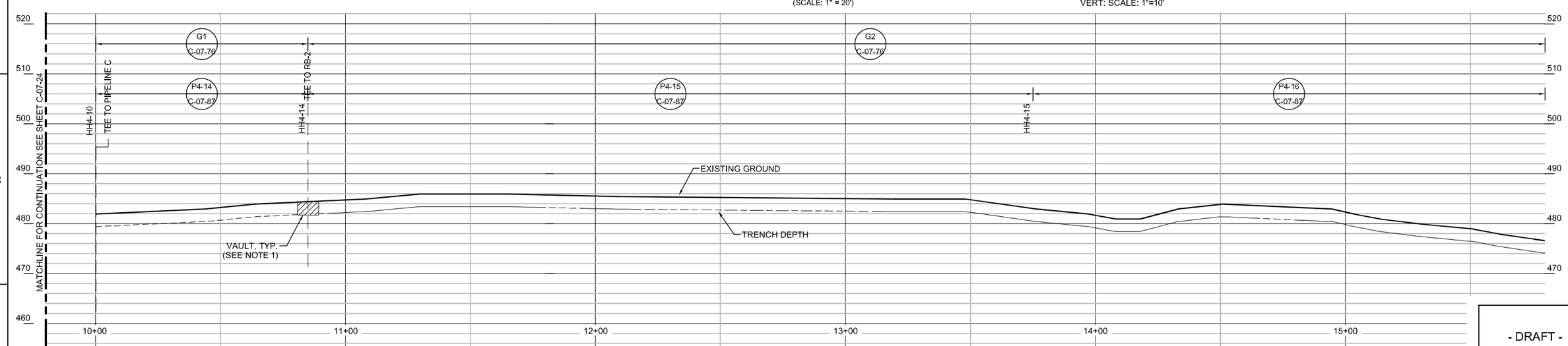

PIPELINE "G" - PROFILE

(SCALE: 1" = 20' H; 1" = 10' V)

- DRAFT -
NOT FOR
CONSTRUCTION

ETIC ENGINEERING

ARCADIS

NO.	DATE	DESCRIPTION	GM/SPEC	DWN	CHKD	SUPV	APVD BY
0	04/05/13	INTERMEDIATE (60%) DESIGN SUBMITTAL		AJW	KLD	JPB	JEF

REVISIONS

APPROVED BY: JEF

SO	
SUPV	JPB
DSGN	KLD
DWN	AJW
CHKD	JPB
OK	JEF
DATE	04/05/13
SCALES	1" = 20'

TOPOCK GROUNDWATER REMEDIATION PROJECT

PIPELINE - PLAN AND PROFILE
STA 10+00 TO STA 15+80
PIPELINE "G1" & "G2"

GAS TRANSMISSION & DISTRIBUTION
PACIFIC GAS AND ELECTRIC COMPANY
SAN FRANCISCO, CALIFORNIA

MICROFILM
BILL OF MATL
DWG LIST
SUPSDS
SUPSD BY
SHEET NO. of SHEETS
C-07-38
REV

04/05/2013, 08:44, G:\Graphics\AR\TOPOCK-01\Submittal-60%_March2013\HILL Formatted\C-07-23 to 43_Plan&Profile.dwg, Tab: C-07-38

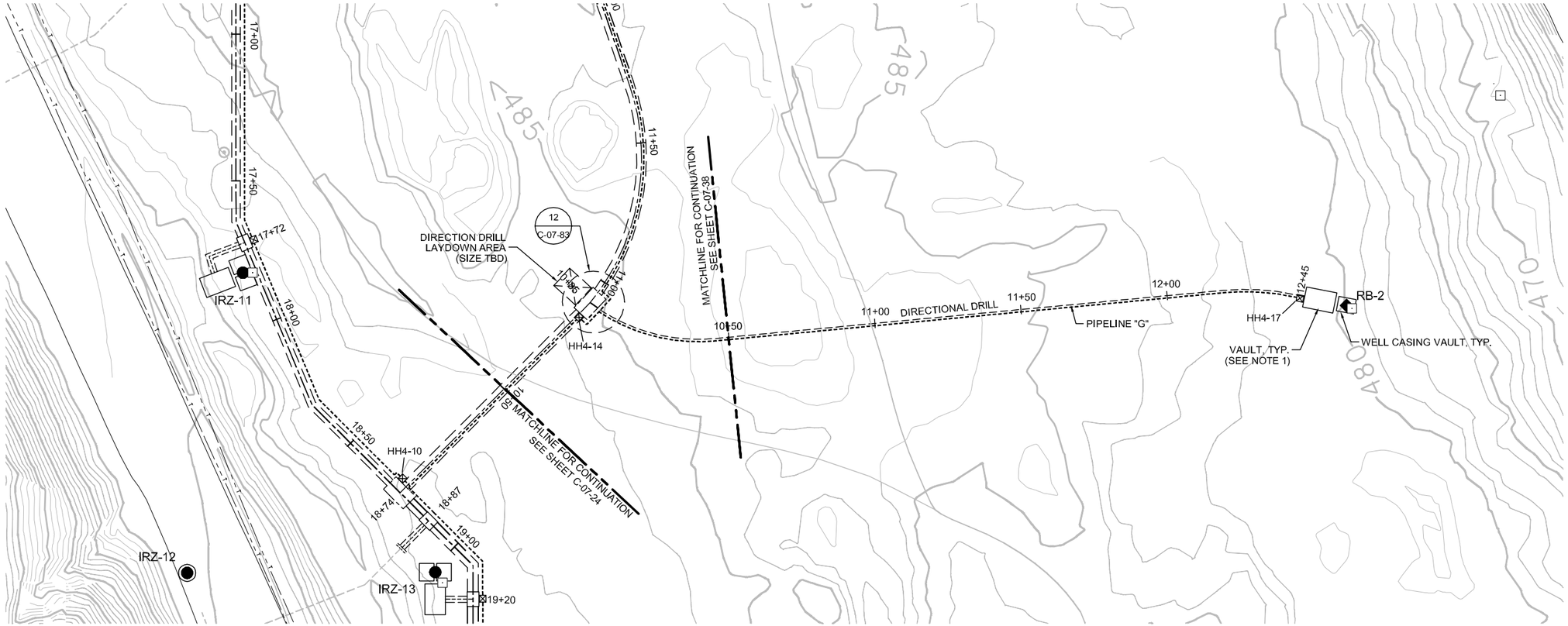

PIPELINE "G" - PLAN

(SCALE: 1" = 20')

0 20 40 60
HORIZ: SCALE: 1"=20'

0 10 20 30
VERT: SCALE: 1"=10'

NOTES
1. VAULT DETAILS SHOWN ON SHEETS M-X-X AND S-X-X.
2. SEE CONDUIT AND CABLE SCHEDULES AND SINGLE LINE DIAGRAMS ON SHEETS E-00-12 THRU E-00-20.

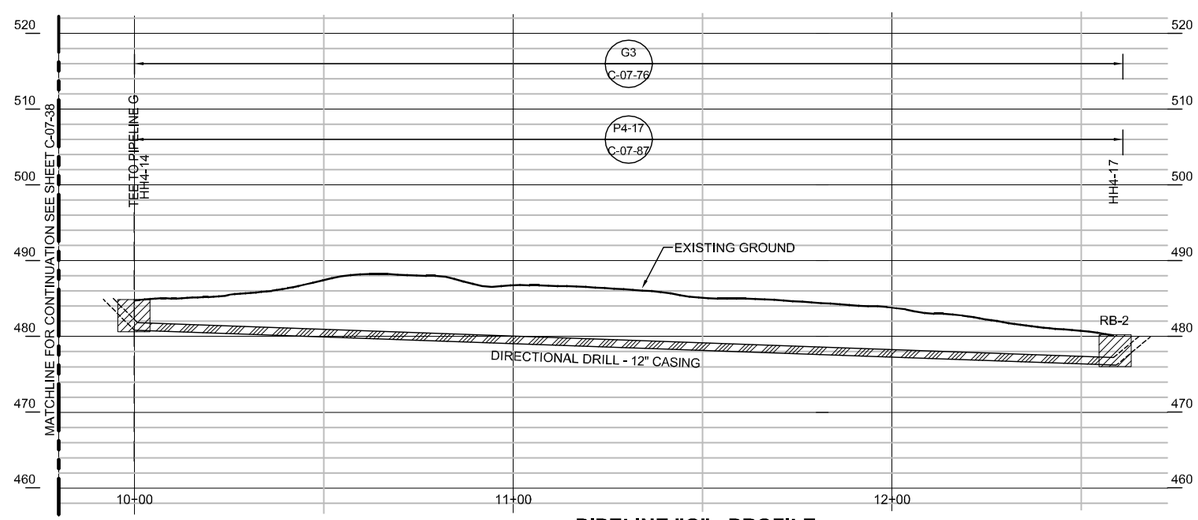

PIPELINE "G" - PROFILE

(SCALE: 1" = 20' H; 1" = 10' V)

- DRAFT -
NOT FOR
CONSTRUCTION

ETIC ENGINEERING

ARCADIS

NO.	DATE	DESCRIPTION	GM/SPEC	DWN	CHKD	SUPV	APVD BY
0	04/05/13	INTERMEDIATE (60%) DESIGN SUBMITTAL		AJW	KLD	JPB	JEF

REVISIONS

APPROVED BY: JEF

SO	
SUPV	JPB
DSGN	KLD
DWN	AJW
CHKD	JPB
OK	JEF
DATE	04/05/13
SCALES	1" = 20'

TOPOCK GROUNDWATER REMEDIATION PROJECT
PIPELINE - PLAN AND PROFILE
STA 10+00 TO STA 12+60
PIPELINE "G2" & "G3"
GAS TRANSMISSION & DISTRIBUTION
PACIFIC GAS AND ELECTRIC COMPANY
SAN FRANCISCO, CALIFORNIA

MICROFILM
BILL OF MATL
DWG LIST
SUPSDS
SUPSD BY
SHEET NO. of SHEETS
C-07-39
REV

04/05/2013, 08:44, G:\Graphics\AR\TOPOCK-01\Submittal-60%_March-2013\HILL Formatted\C-07-23 to 43_Plan&Profile.dwg, Tab: C-07-39

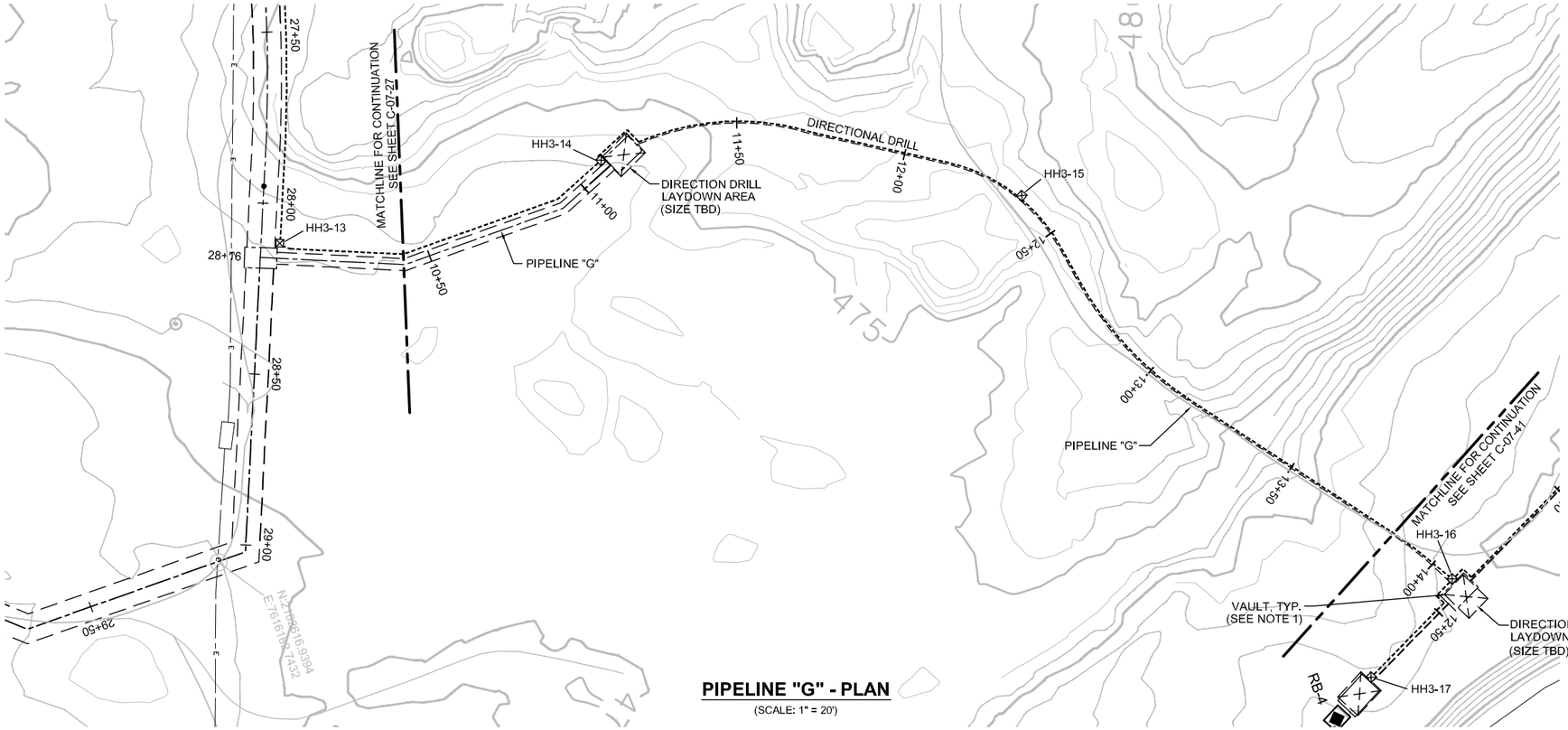

PIPELINE "G" - PLAN

(SCALE: 1" = 20')

NOTES:

1. VAULT DETAILS SHOWN ON SHEETS M-X-X AND S-X-X.
2. SEE CONDUIT AND CABLE SCHEDULES AND SINGLE LINE DIAGRAMS ON SHEETS E-00-12 THRU E-00-20.

0 20 40 60
HORIZ: SCALE: 1"=20'

0 10 20 30
VERT: SCALE: 1"=10'

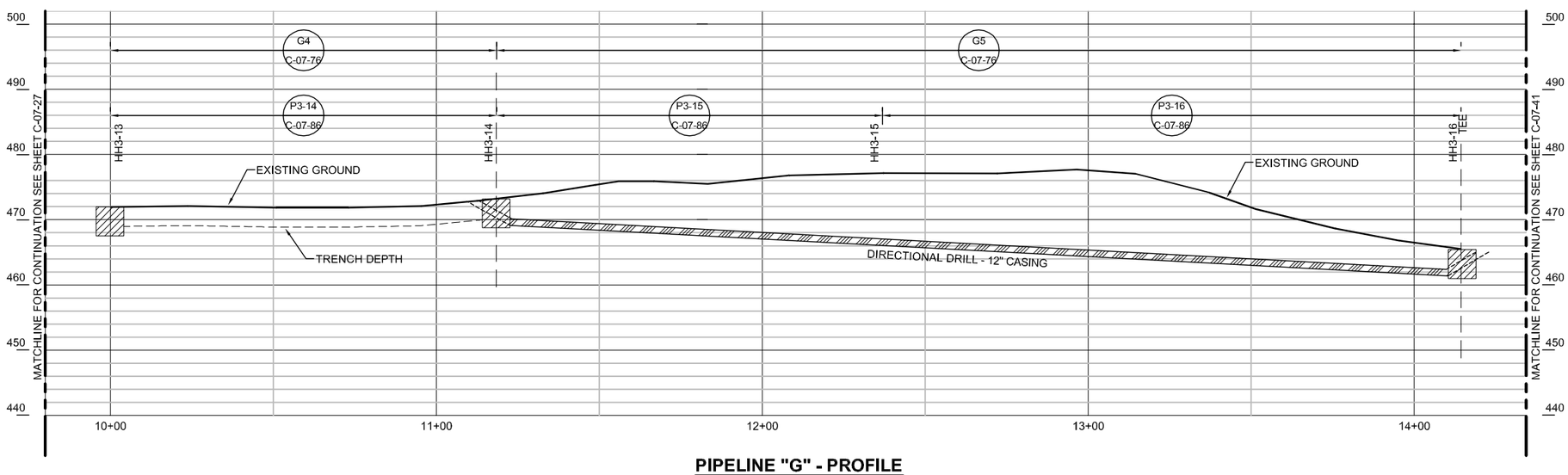

PIPELINE "G" - PROFILE

(SCALE: 1" = 20' H; 1" = 10' V)

- DRAFT -
NOT FOR
CONSTRUCTION

ETIC ENGINEERING

ARCADIS

NO.	DATE	DESCRIPTION	GM/SPEC	DWN	CHKD	SUPV	APVD BY
0	04/05/13	INTERMEDIATE (60%) DESIGN SUBMITTAL		AJW	KLD	JPB	JEF

REVISIONS

APPROVED BY: JEF

SO	
SUPV	JPB
DSGN	KLD
DWN	AJW
CHKD	JPB
OK	JEF
DATE	04/05/13
SCALES	1" = 20'

TOPOCK GROUNDWATER REMEDIATION PROJECT

PIPELINE - PLAN AND PROFILE
STA 10+00 TO STA 14+15
PIPELINE "G4 & G5"

GAS TRANSMISSION & DISTRIBUTION
PACIFIC GAS AND ELECTRIC COMPANY
SAN FRANCISCO, CALIFORNIA

MICROFILM
BILL OF MATL
DWG LIST
SUPSDS
SUPSD BY
SHEET NO. of SHEETS
C-07-40
REV

04/05/2013, 08:45, G:\Graphics\AR\TOPOCK-01\Submittal\60%_March2013\HILL Formatted\C-07-23 to 43_Plan&Profile.dwg, Tab: C-07-40

N1808

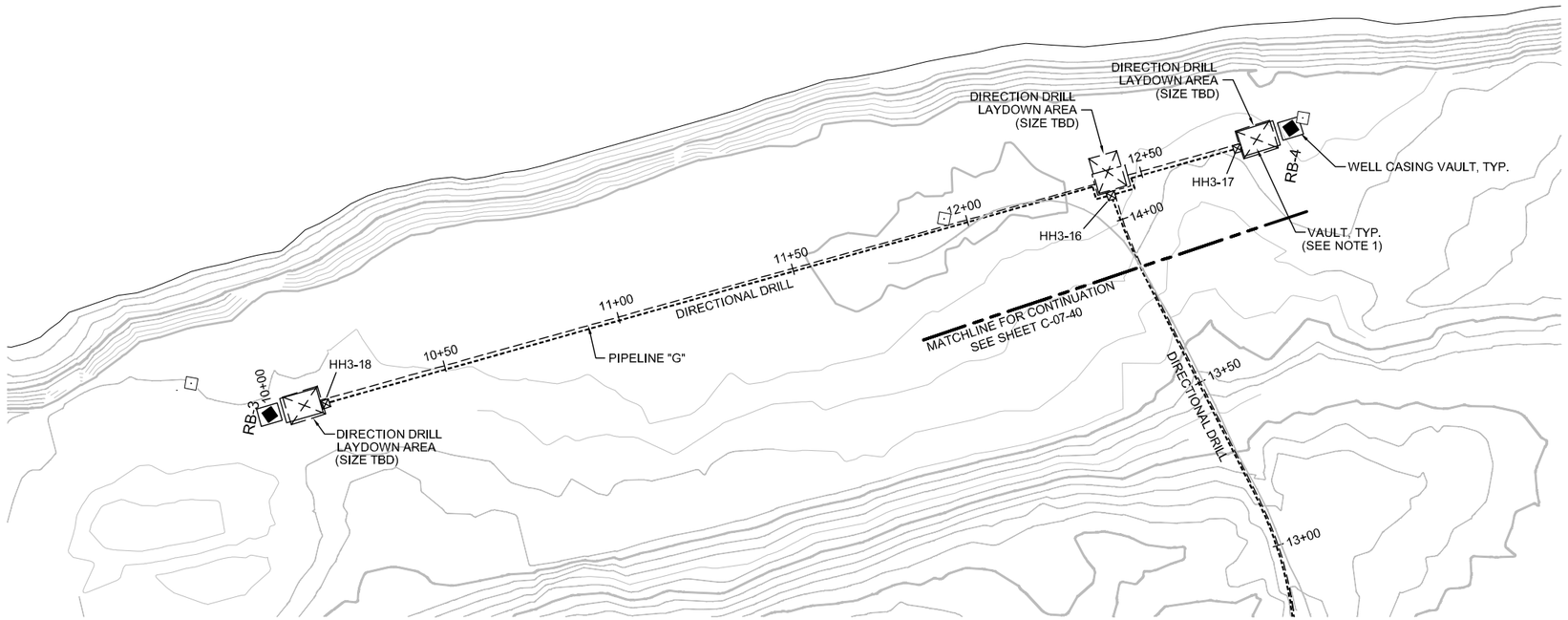

PIPELINE "G" - PLAN

(SCALE: 1" = 20')

NOTES

1. VAULT DETAILS SHOWN ON SHEETS M-X-X AND S-X-X.
2. SEE CONDUIT AND CABLE SCHEDULES AND SINGLE LINE DIAGRAMS ON SHEETS E-00-12 THRU E-00-20.

0 20 40 60

HORIZ: SCALE: 1"=20'

0 10 20 30

VERT: SCALE: 1"=10'

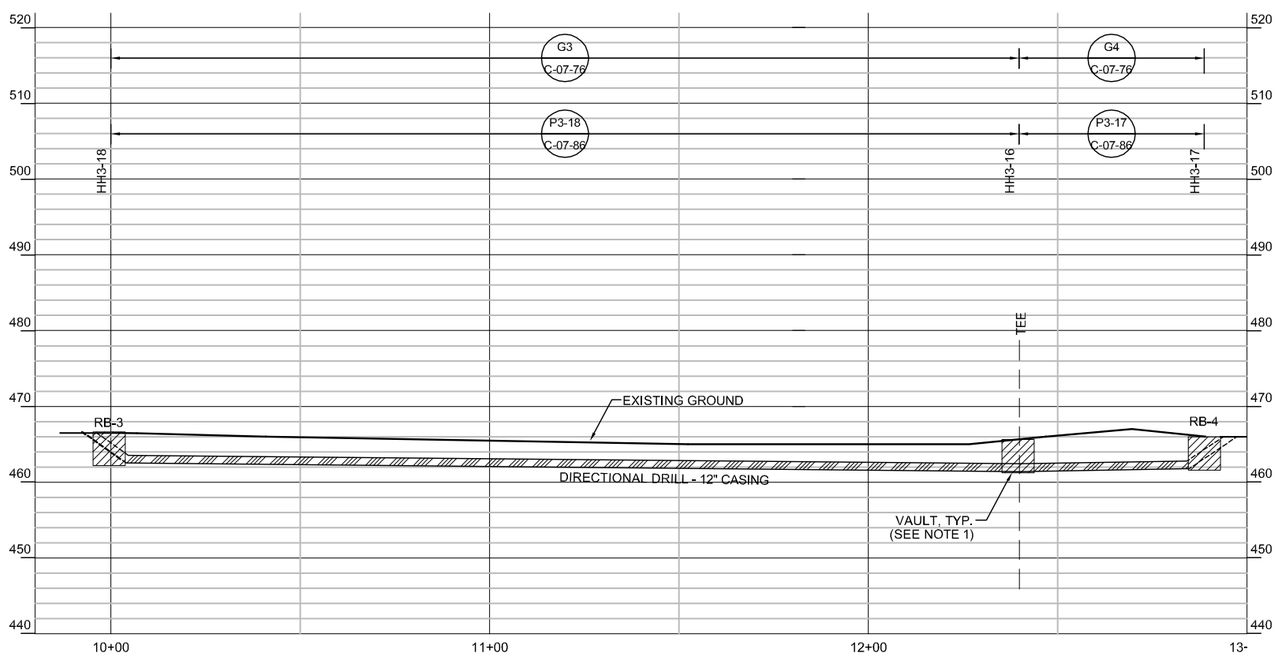

PIPELINE "G" - PROFILE

(SCALE: 1" = 20' H; 1" = 10' V)

- DRAFT -
NOT FOR
CONSTRUCTION

ETIC ENGINEERING

ARCADIS

NO.	DATE	DESCRIPTION	GM/SPEC	DWN	CHKD	SUPV	APVD BY
0	04/05/13	INTERMEDIATE (60%) DESIGN SUBMITTAL		AJW	KLD	JPB	JEF

REVISIONS

APPROVED BY: JEF

SO	
SUPV	JPB
DSGN	KLD
DWN	AJW
CHKD	JPB
OK	JEF
DATE	04/05/13
SCALES	1" = 20'

TOPOCK GROUNDWATER REMEDIATION PROJECT

PIPELINE - PLAN AND PROFILE
STA 10+00 TO STA 12+85
PIPELINE "G3"

GAS TRANSMISSION & DISTRIBUTION

PACIFIC GAS AND ELECTRIC COMPANY
SAN FRANCISCO, CALIFORNIA

MICROFILM

BILL OF MATL

DWG LIST

SUPSDS

SUPSD BY

SHEET NO. of SHEETS

C-07-41

REV

04/05/2013, 08:45, G:\Graphics\ART\TOPOCK-01\Submittal-60%_March2013\HILL Formatted\C-07-23 to 43_Plan&Profile.dwg, Tab: C-07-41

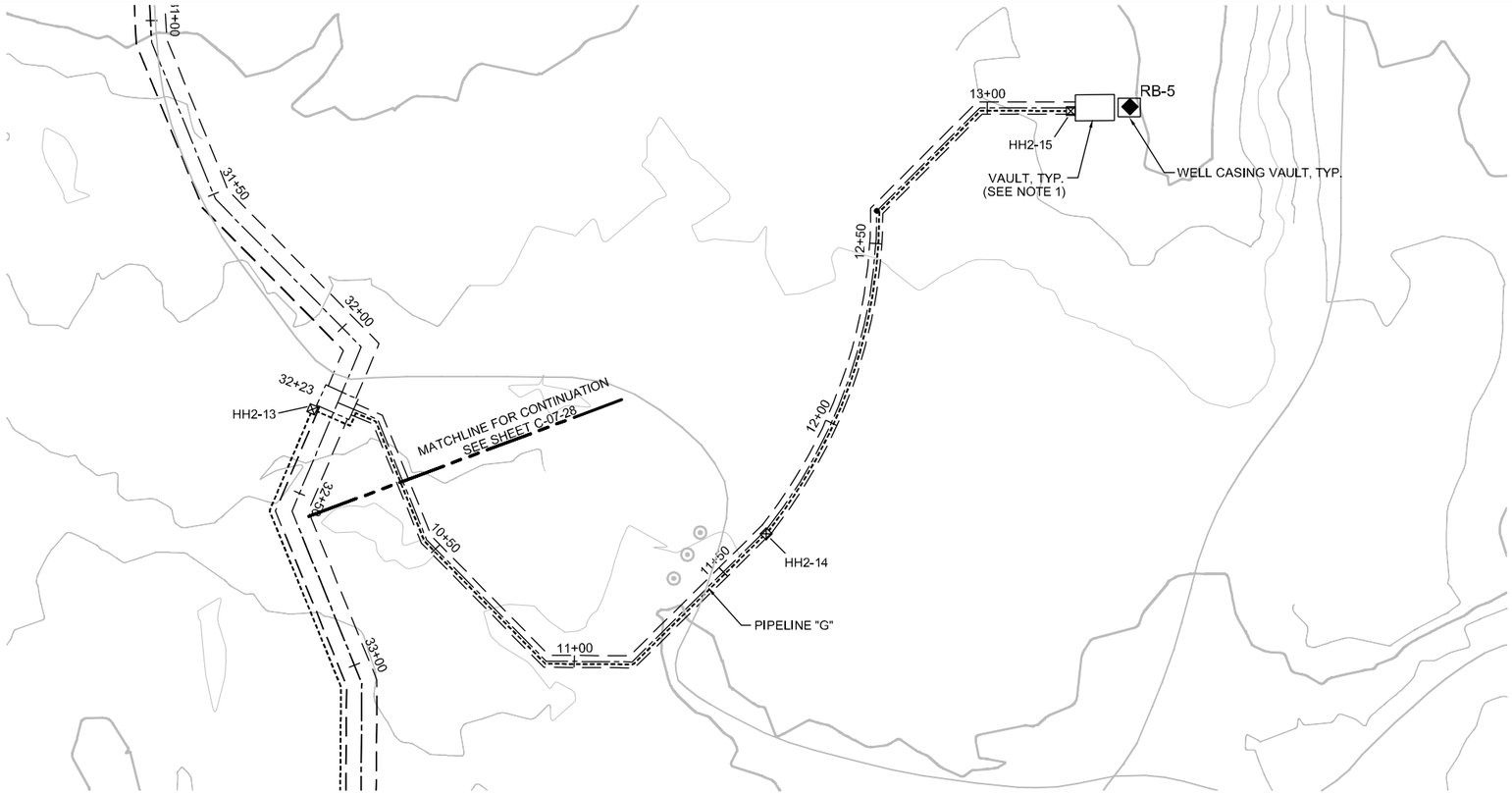

NOTES
1. VAULT DETAILS SHOWN ON SHEETS M-X-X AND S-X-X.
2. SEE CONDUIT AND CABLE SCHEDULES AND SINGLE LINE DIAGRAMS ON SHEETS E-00-12 THRU E-00-20.

N

0 20 40 60
HORIZ: SCALE: 1"=20'

0 10 20 30
VERT: SCALE: 1"=10'

PIPELINE "G" - PLAN

(SCALE: 1" = 20')

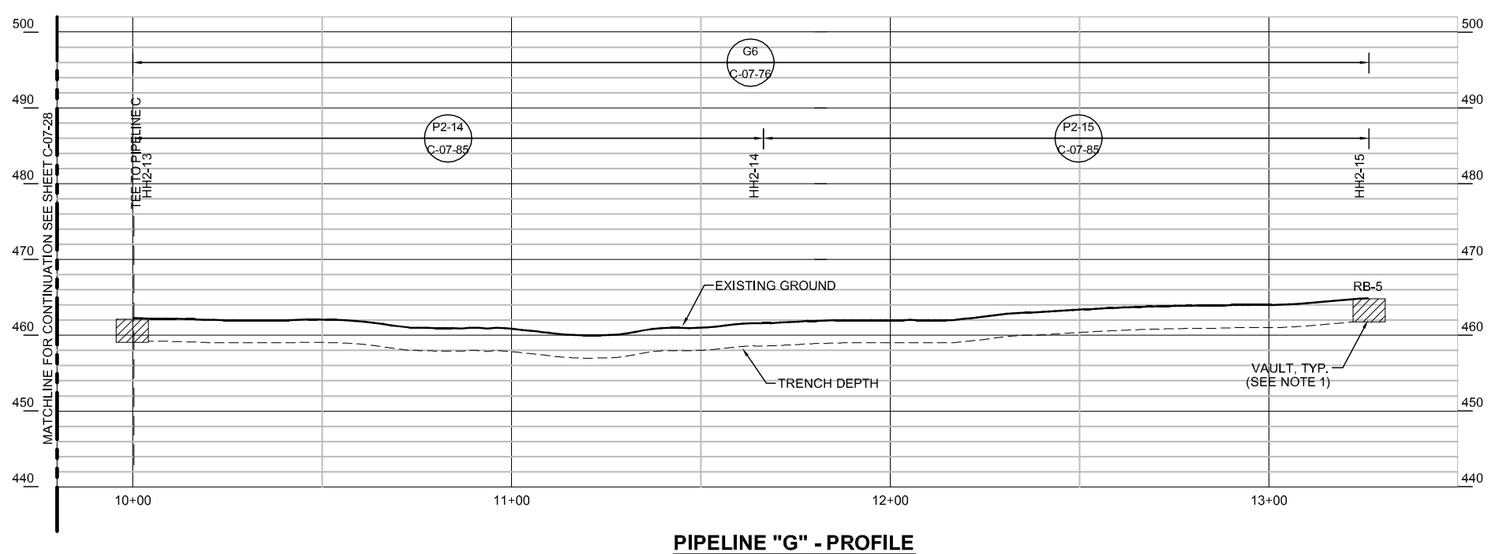

PIPELINE "G" - PROFILE

(SCALE: 1" = 20' H; 1" = 10' V)

- DRAFT -
NOT FOR
CONSTRUCTION

ETIC ENGINEERING

ARCADIS

NO.	DATE	DESCRIPTION	GM/SPEC	DWN	CHKD	SUPV	APVD BY
0	04/05/13	INTERMEDIATE (60%) DESIGN SUBMITTAL		AJW	KLD	JPB	JEF

REVISIONS

APPROVED BY: JEF

SO	
SUPV	JPB
DSGN	KLD
DWN	AJW
CHKD	JPB
OK	JEF
DATE	04/05/13
SCALES	1" = 20'

TOPOCK GROUNDWATER REMEDIATION PROJECT
PIPELINE - PLAN AND PROFILE
STA 10+00 TO STA 13+25
PIPELINE "G6"
GAS TRANSMISSION & DISTRIBUTION
PACIFIC GAS AND ELECTRIC COMPANY
SAN FRANCISCO, CALIFORNIA

MICROFILM
BILL OF MATL
DWG LIST
SUPSDS
SUPSD BY
SHEET NO. C-07-42 of SHEETS
REV

04/05/2013, 08:45, G:\Graphics\ARI\TOPOCK-01\Submittal-60%_March2013\HILL Formatted\C-07-23 to 43_Plan&Profile.dwg, Tab: C-07-42

N1808

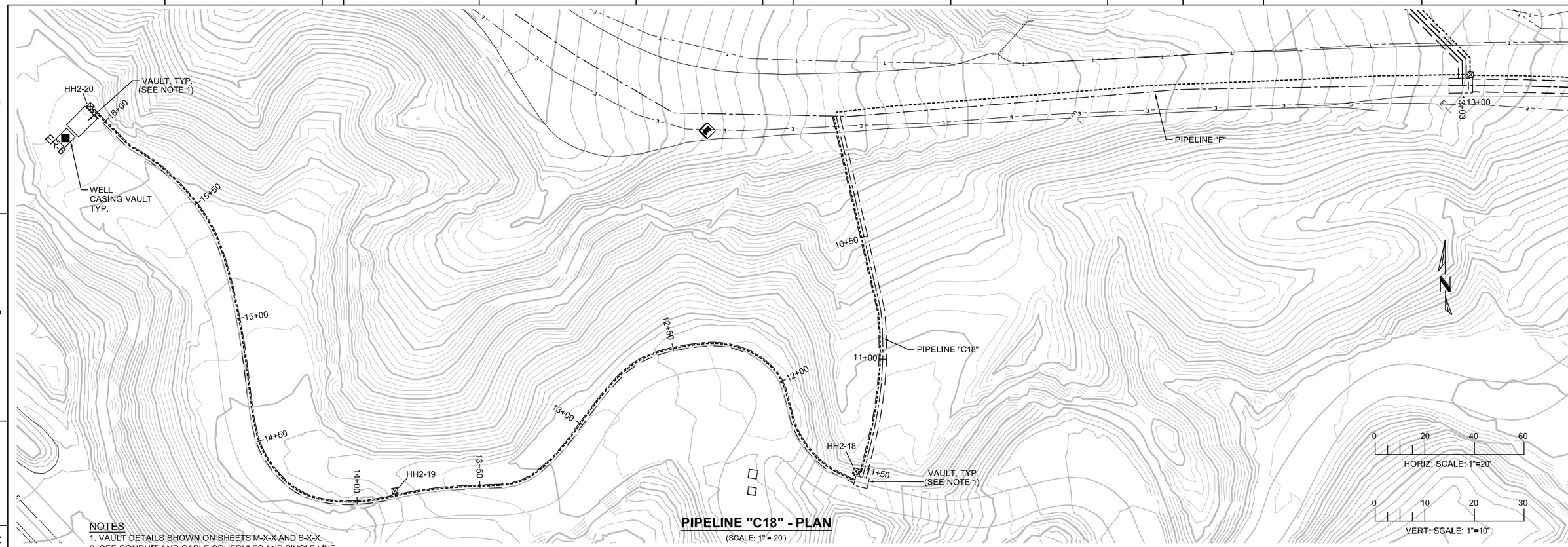

PIPELINE "C18" - PLAN

(SCALE: 1" = 20')

NOTES
1. VAULT DETAILS SHOWN ON SHEETS M-X-X AND S-X-X.
2. SEE CONDUIT AND CABLE SCHEDULES AND SINGLE LINE DIAGRAMS ON SHEETS E-00-12 THRU E-00-20.

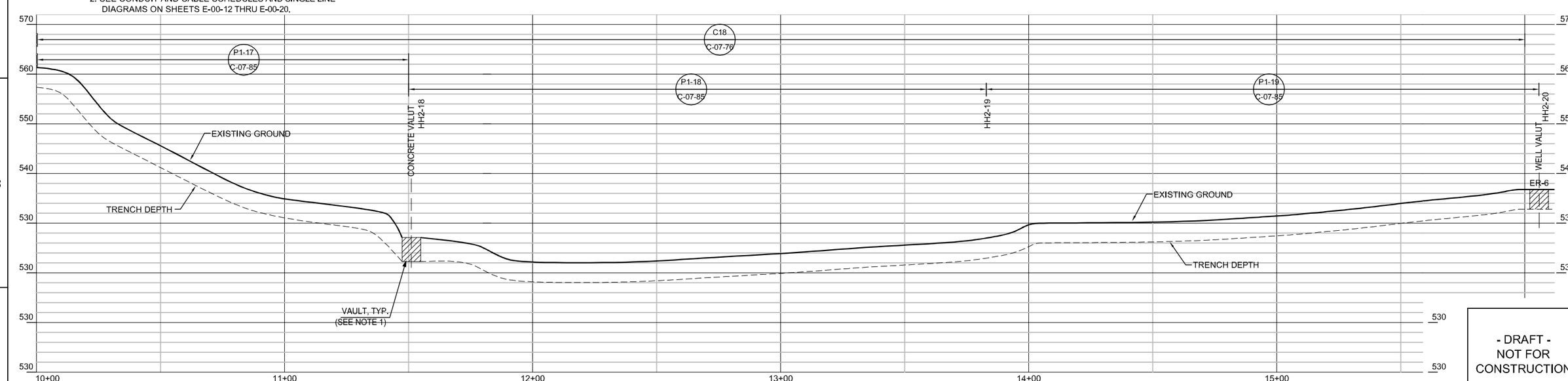

PIPELINE "C18" - PROFILE

(SCALE: 1" = 20' H; 1" = 10' V)

- DRAFT -
NOT FOR CONSTRUCTION

ETIC ENGINEERING

ARCADIS

NO.	DATE	DESCRIPTION	GM/SPEC	DWN	CHKD	SUPV	APVD BY
0	04/05/13	INTERMEDIATE (60%) DESIGN SUBMITTAL		AJW	KLD	JPB	JEF

REVISIONS

APPROVED BY: JEF

SO	
SUPV	JPB
DSGN	KLD
DWN	AJW
CHKD	JPB
OK	JEF
DATE	04/05/13
SCALES	1" = 20'

TOPOCK GROUNDWATER REMEDIATION PROJECT

PIPELINE - PLAN AND PROFILE STA 10+00 TO STA 16+06 PIPELINE "C18"

GAS TRANSMISSION & DISTRIBUTION
PACIFIC GAS AND ELECTRIC COMPANY
SAN FRANCISCO, CALIFORNIA

MICROFILM
BILL OF MATL
DWG LIST
SUPSDS
SUPSD BY
SHEET NO. C-07-43 of SHEETS
REV

04/05/2013, 08:46, G:\Graphics\ARI\TOPOCK\-01\Submittal\60%_March2013\WILL Formatted\C-07-23 to +3_Plan&Profile.dwg, Tab: C-07-43

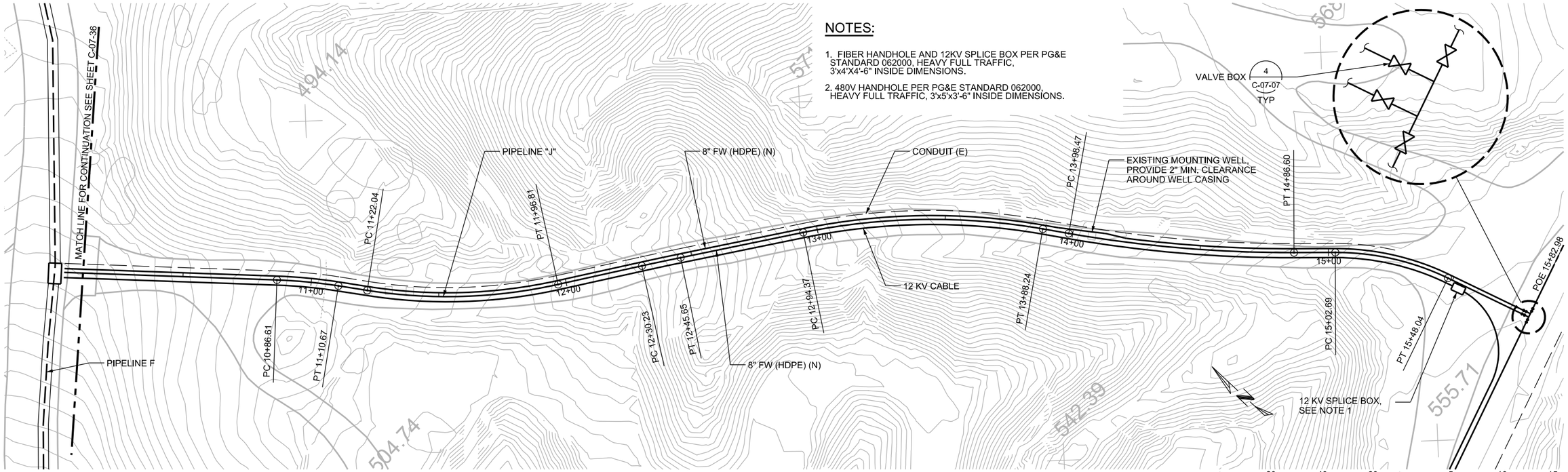

NOTES:

1. FIBER HANDHOLE AND 12KV SPLICE BOX PER PG&E STANDARD 062000, HEAVY FULL TRAFFIC, 3'x4'X4'-6" INSIDE DIMENSIONS.
2. 480V HANDHOLE PER PG&E STANDARD 062000, HEAVY FULL TRAFFIC, 3'x5'x3'-6" INSIDE DIMENSIONS.

PIPELINE "J" - PLAN

(SCALE: 1" = 20')

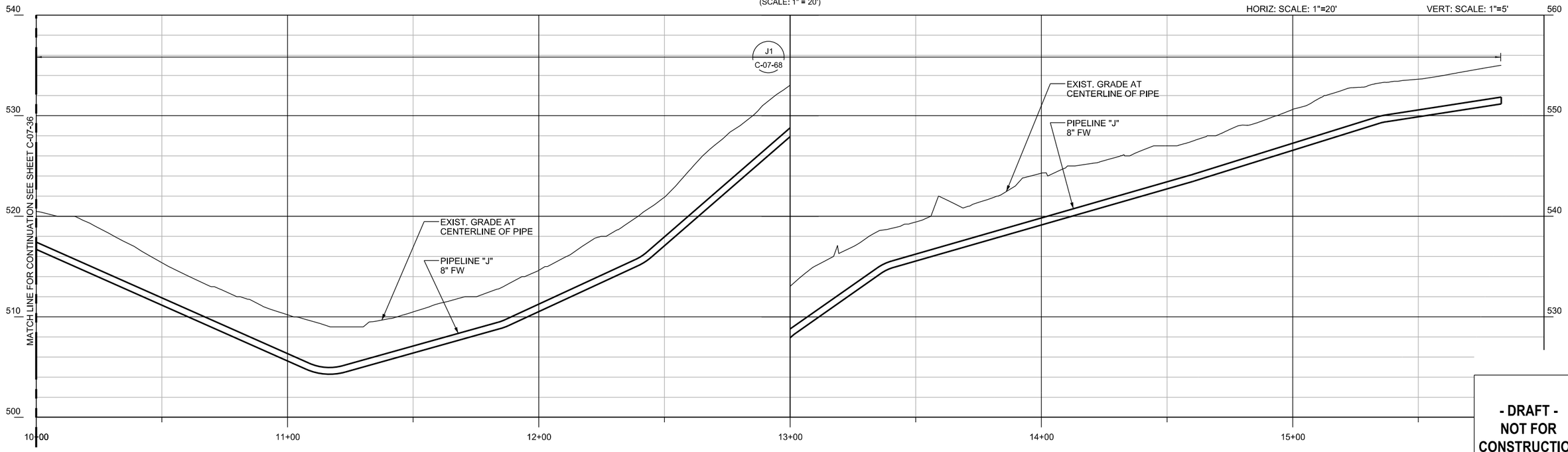

PIPELINE "J" - PROFILE

(SCALE: 1" = 20' H; 1" = 5' V)

- DRAFT - NOT FOR CONSTRUCTION

AECOM
2101 WEBSTER STREET SUITE 1000
OAKLAND, CA 94612-3060
PROJECT NO. 60272335

NO.	DATE	DESCRIPTION	GM/SPEC	DWN	CHKD	SUPV	APVD BY
0	9/12/12	INTERMEDIATE (60%) DESIGN SUBMITTAL					

REVISIONS

APPROVED BY
SO XXXXX
SUPV PD
DSGN TL
DWN TL
CHKD JM
OK PD
DATE 9/12/12
SCALES 1" = 20'-0"

TOPOCK GROUNDWATER REMEDIATION PROJECT
PIPELINE - PLAN AND PROFILE
STA 10+04 TO STA 15+83
PIPELINE "J"
GAS TRANSMISSION & DISTRIBUTION
PACIFIC GAS AND ELECTRIC COMPANY
SAN FRANCISCO, CALIFORNIA

MICROFILM
BILL OF MATL
DWG LIST
SUPSDS
SUPSD BY
SHEET NO. OF SHEETS
C-07-54
REV 0

N1808

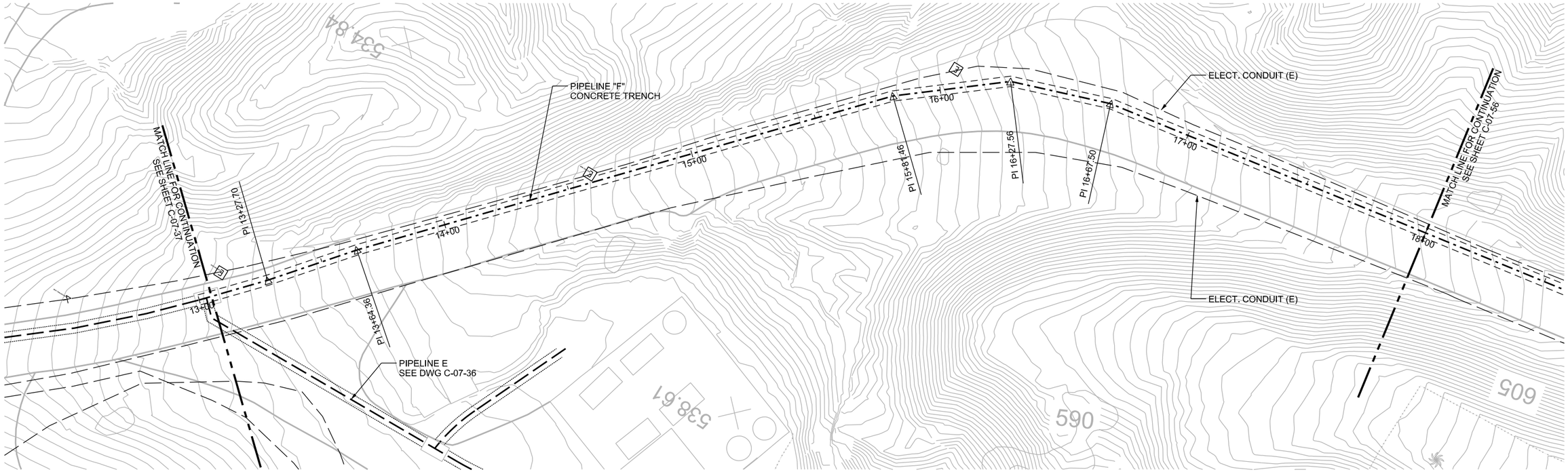

PIPELINE "F" - PLAN

(SCALE: 1" = 20')

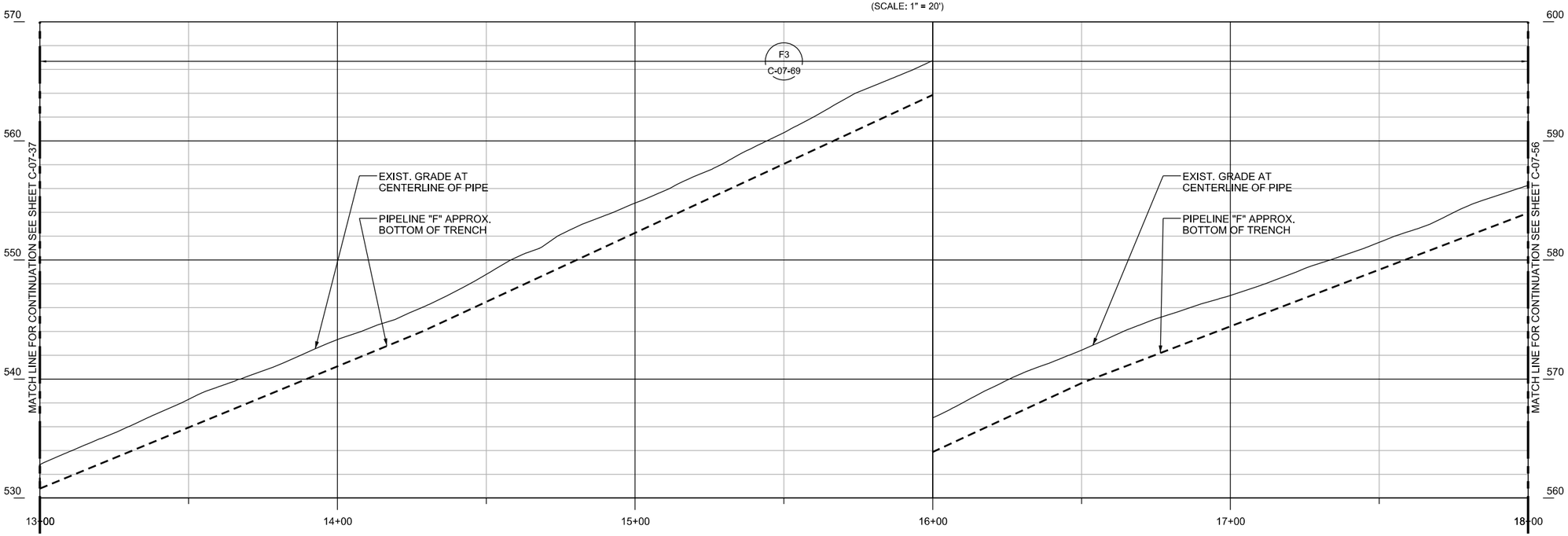

PIPELINE "F" - PROFILE

(SCALE: 1" = 20' H; 1" = 5' V)

0 20 40 60
HORIZ: SCALE: 1"=20'

0 5 10 15
VERT: SCALE: 1"=5'

- DRAFT -
NOT FOR CONSTRUCTION

AECOM
2101 WEBSTER STREET SUITE 1000
OAKLAND, CA 94612-3060
PROJECT NO. 60272335

NO.	DATE	DESCRIPTION	GM/SPEC	DWN	CHKD	SUPV	APVD BY
0	9/12/12	INTERMEDIATE (60%) DESIGN SUBMITTAL					

REVISIONS

APPROVED BY
SO XXXXX
SUPV PD
DSGN TL
DWN TL
CHKD JM
OK PD
DATE 9/12/12
SCALES 1" = 20'-0"

TOPOCK GROUNDWATER REMEDIATION PROJECT
PIPELINE - PLAN AND PROFILE
STA 13+05 TO STA 18+00
PIPELINE "F"
GAS TRANSMISSION & DISTRIBUTION
PACIFIC GAS AND ELECTRIC COMPANY
SAN FRANCISCO, CALIFORNIA

MICROFILM
BILL OF MATL
DWG LIST
SUPSDS
SUPSD BY
SHEET NO. OF SHEETS
C-07-55
REV 0

N1808

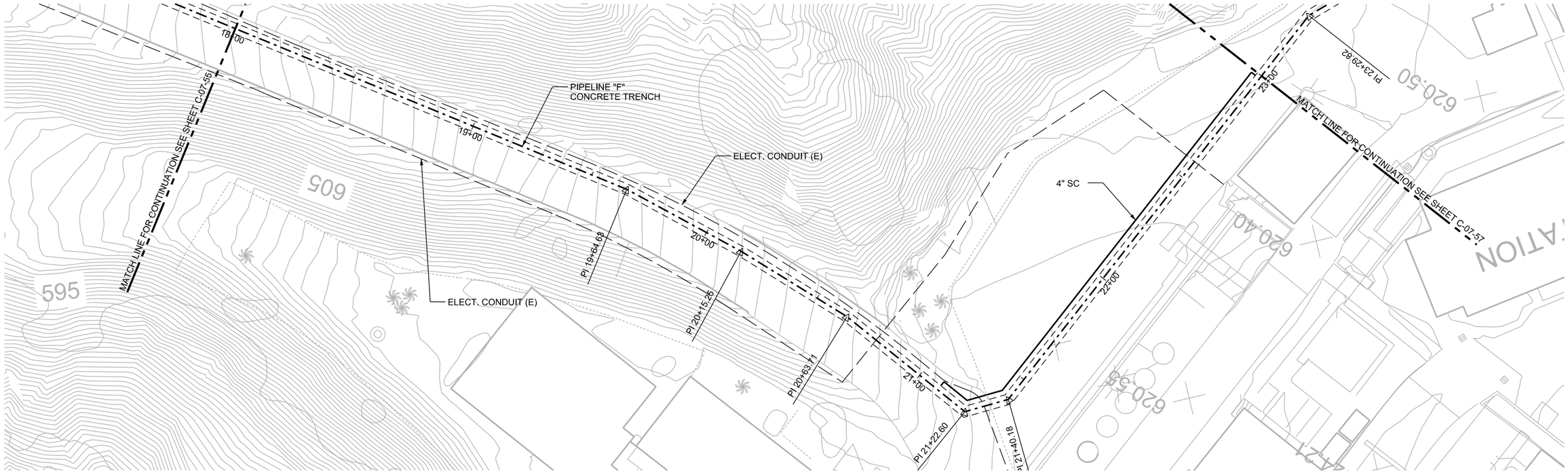

PIPELINE "F" - PLAN

(SCALE: 1" = 20')

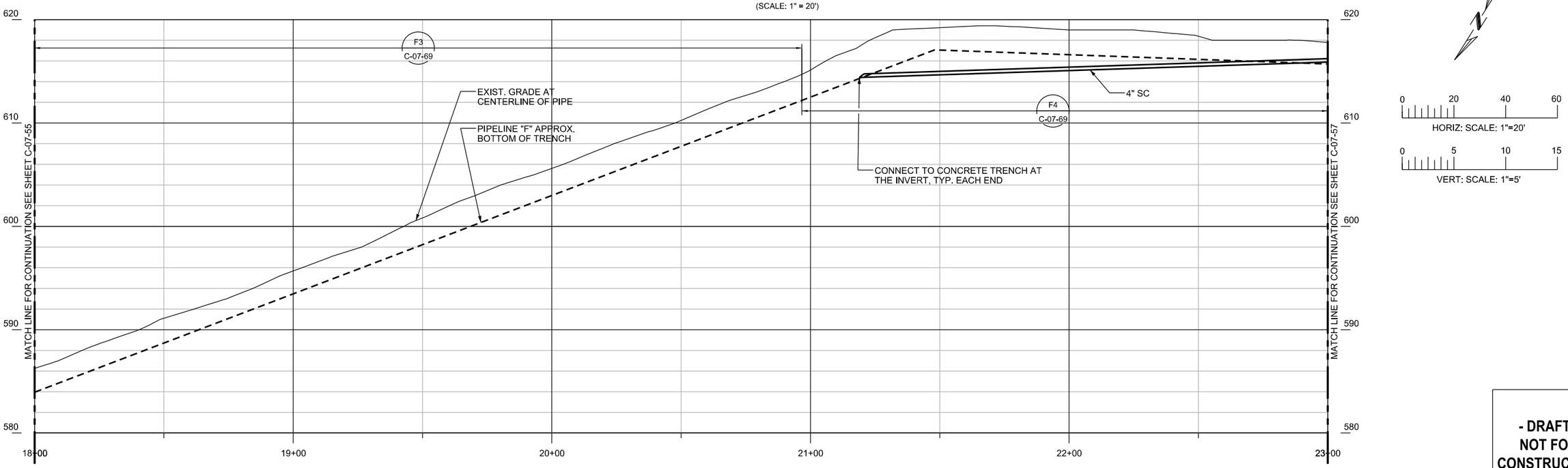

PIPELINE "F" - PROFILE

(SCALE: 1" = 20' H; 1" = 5' V)

0 20 40 60
HORIZ: SCALE: 1"=20'

0 5 10 15
VERT: SCALE: 1"=5'

- DRAFT -
NOT FOR CONSTRUCTION

AECOM
2101 WEBSTER STREET SUITE 1000
OAKLAND, CA 94612-3060
PROJECT NO. 60272335

NO.	DATE	DESCRIPTION	GM/SPEC	DWN	CHKD	SUPV	APVD BY
0	9/12/12	INTERMEDIATE (60%) DESIGN SUBMITTAL					

REVISIONS

APPROVED BY

SO	XXXXX
SUPV	PD
DSGN	TL
DWN	TL
CHKD	JM
OK	PD
DATE	9/12/12
SCALES	1" = 20'-0

TOPOCK GROUNDWATER REMEDIATION PROJECT
PIPELINE - PLAN AND PROFILE
STA 18+00 TO STA 23+00
PIPELINE "F"
GAS TRANSMISSION & DISTRIBUTION
PACIFIC GAS AND ELECTRIC COMPANY
SAN FRANCISCO, CALIFORNIA

MICROFILM
BILL OF MATL
DWG LIST
SUPSDS
SUPSD BY
SHEET NO. C-07-56 OF SHEETS
REV 0

N1808

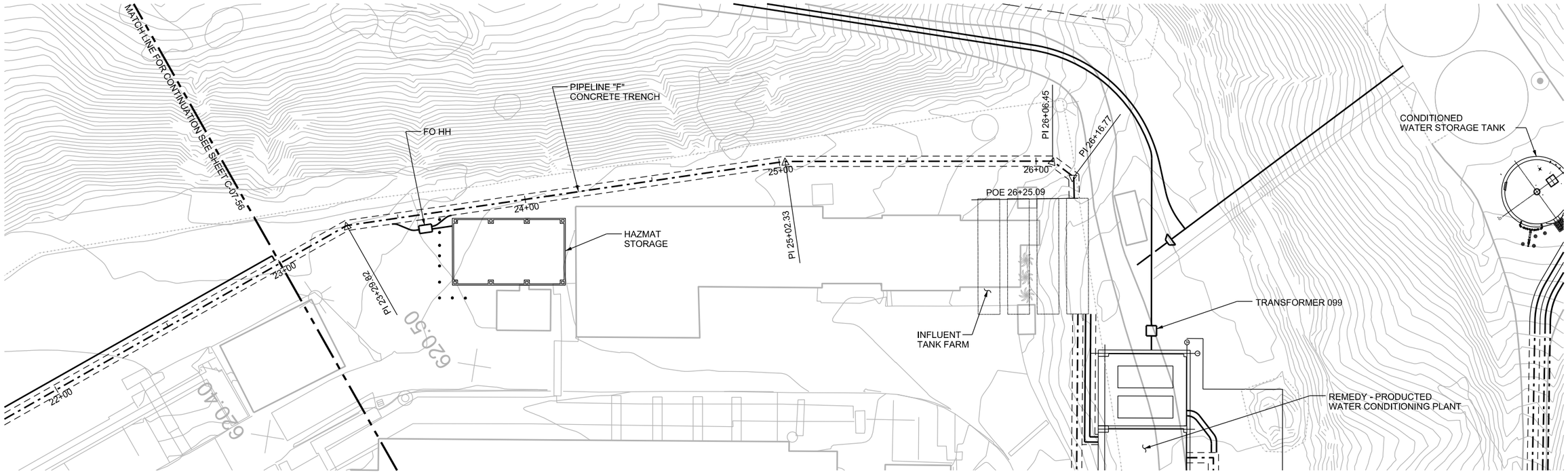

PIPELINE "F" - PLAN

(SCALE: 1" = 20')

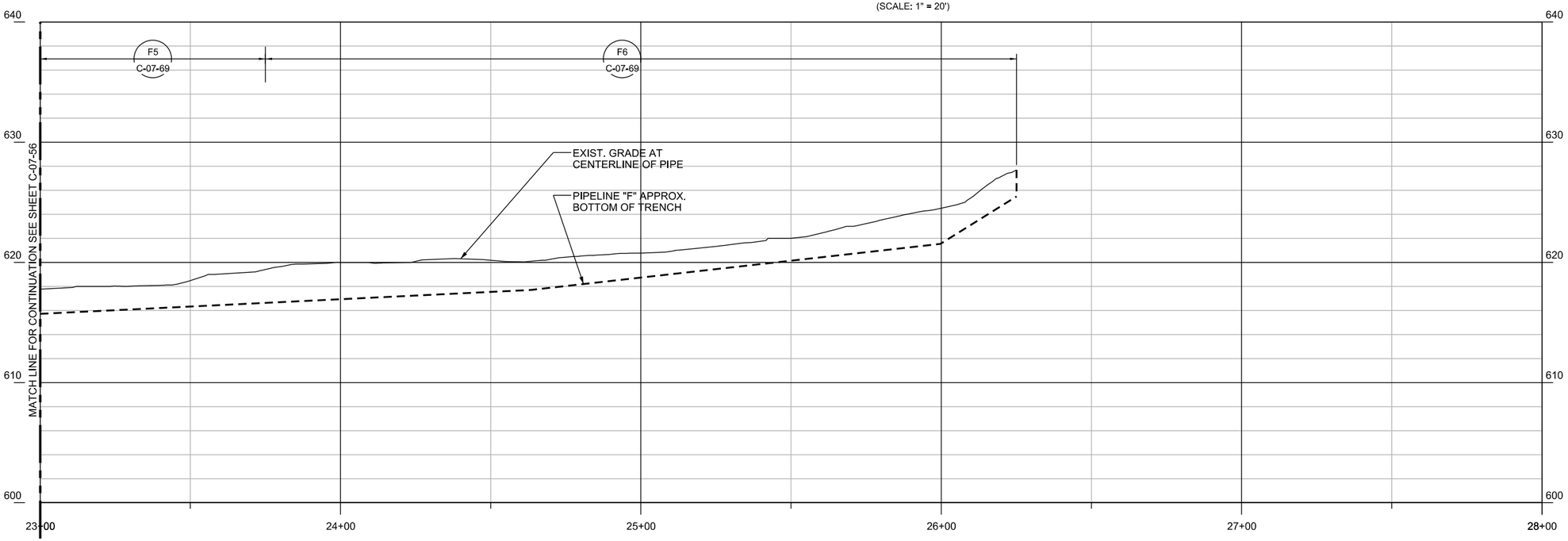

PIPELINE "F" - PROFILE

(SCALE: 1" = 20' H; 1" = 5' V)

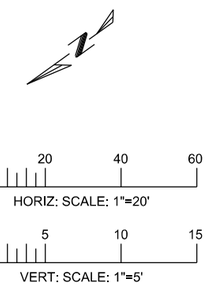

- DRAFT -
NOT FOR CONSTRUCTION

AECOM
2101 WEBSTER STREET SUITE 1000
OAKLAND, CA 94612-3060

PROJECT NO. 60272335

NO.	DATE	DESCRIPTION	GM/SPEC	DWN	CHKD	SUPV	APVD BY
0	9/12/12	INTERMEDIATE (60%) DESIGN SUBMITTAL					

REVISIONS

APPROVED BY

SO	XXXXX
SUPV	PD
DSGN	TL
DWN	TL
CHKD	JM
OK	PD
DATE	9/12/12
SCALES	1" = 20'-0"

TOPOCK GROUNDWATER REMEDIATION PROJECT
PIPELINE - PLAN AND PROFILE
STA 23+00 TO STA 26+25
PIPELINE "F"
GAS TRANSMISSION & DISTRIBUTION
PACIFIC GAS AND ELECTRIC COMPANY
SAN FRANCISCO, CALIFORNIA

MICROFILM
BILL OF MATL
DWG LIST
SUPSDS
SUPSD BY
SHEET NO. C-07-57 OF SHEETS
REV 0

N1808

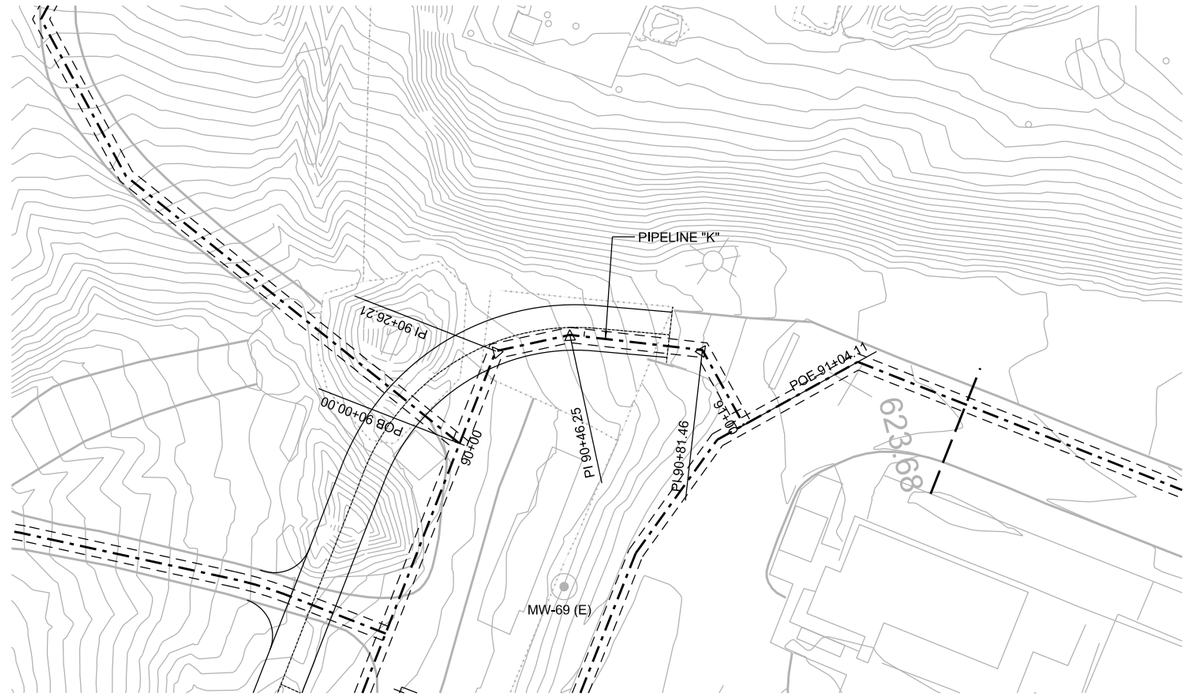

PIPELINE "K" - PLAN

(SCALE: 1" = 20')

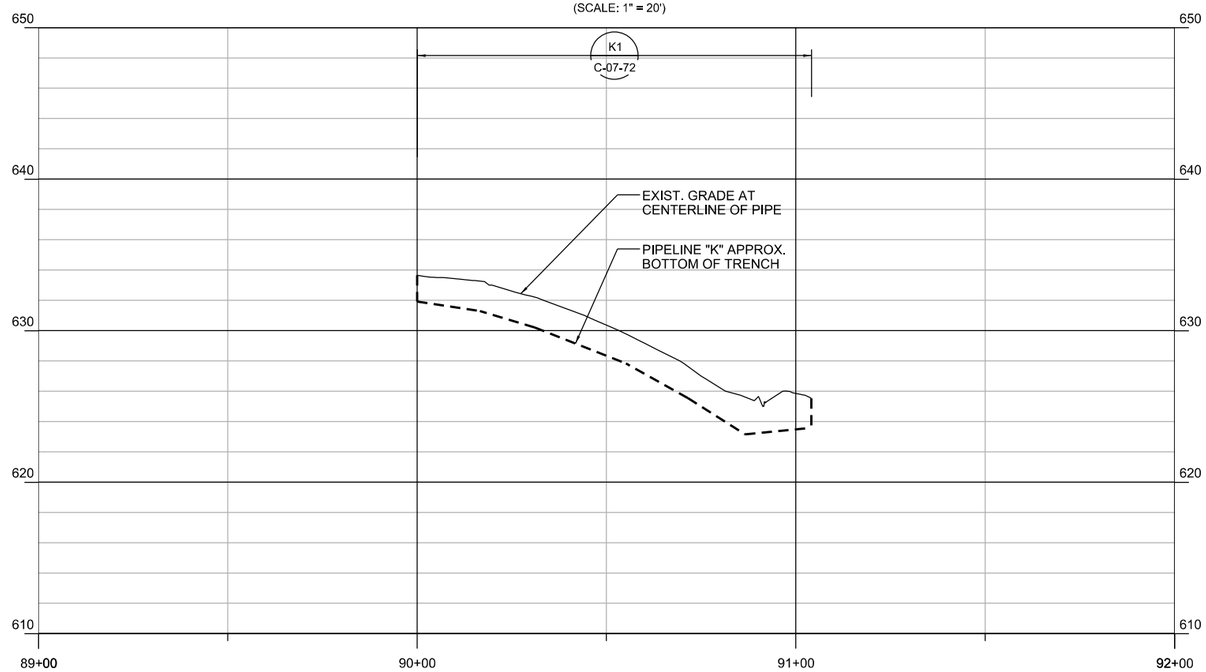

PIPELINE "K" - PROFILE

(SCALE: 1" = 20' H; 1" = 5' V)

0 20 40 60
HORIZ: SCALE: 1"=20'

0 5 10 15
VERT: SCALE: 1"=5'

- DRAFT - NOT FOR CONSTRUCTION

AECOM
2101 WEBSTER STREET SUITE 1000
OAKLAND, CA 94612-3060
PROJECT NO. 60272335

NO.	DATE	DESCRIPTION	GM/SPEC	DWN	CHKD	SUPV	APVD BY
0	9/12/12	INTERMEDIATE (60%) DESIGN SUBMITTAL					

REVISIONS

APPROVED BY

SO	XXXXX
SUPV	PD
DSGN	TL
DWN	TL
CHKD	JM
OK	PD
DATE	9/12/12
SCALES	1" = 20'-0"

TOPOCK GROUNDWATER REMEDIATION PROJECT
PIPELINE - PLAN AND PROFILE
STA 90+00 TO STA 91+04
PIPELINE "K"
GAS TRANSMISSION & DISTRIBUTION
PACIFIC GAS AND ELECTRIC COMPANY
SAN FRANCISCO, CALIFORNIA

MICROFILM
BILL OF MATL
DWG LIST
SUPSDS
SUPSD BY
SHEET NO. C-07-58 OF SHEETS
REV 0

N1808

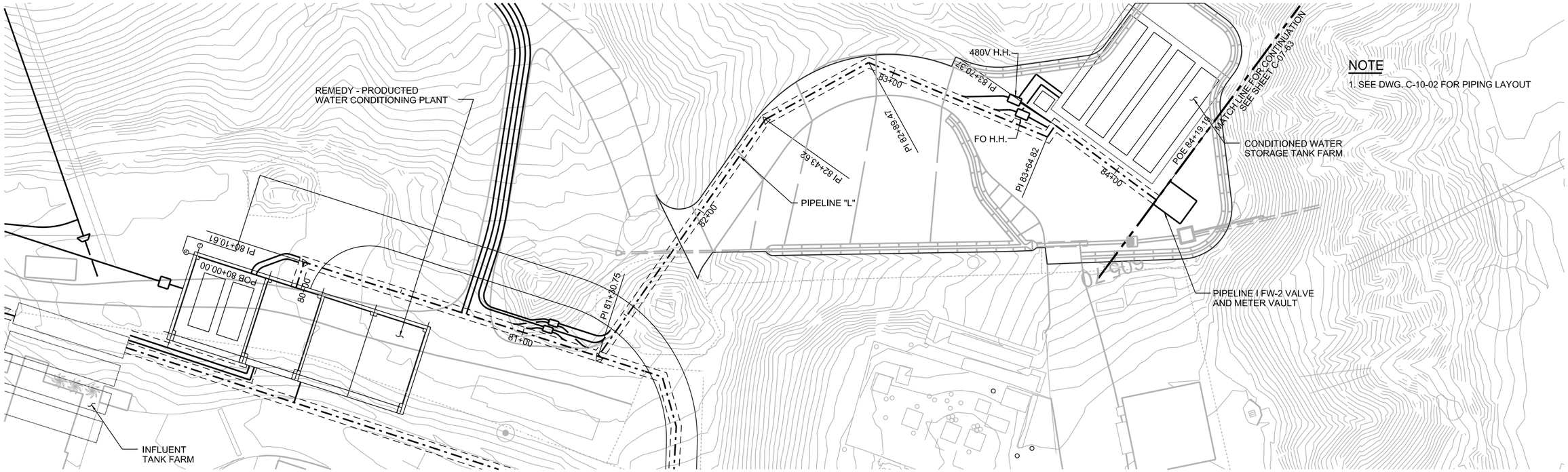

NOTE

1. SEE DWG. C-10-02 FOR PIPING LAYOUT

PIPELINE "L" - PLAN

(SCALE: 1" = 20')

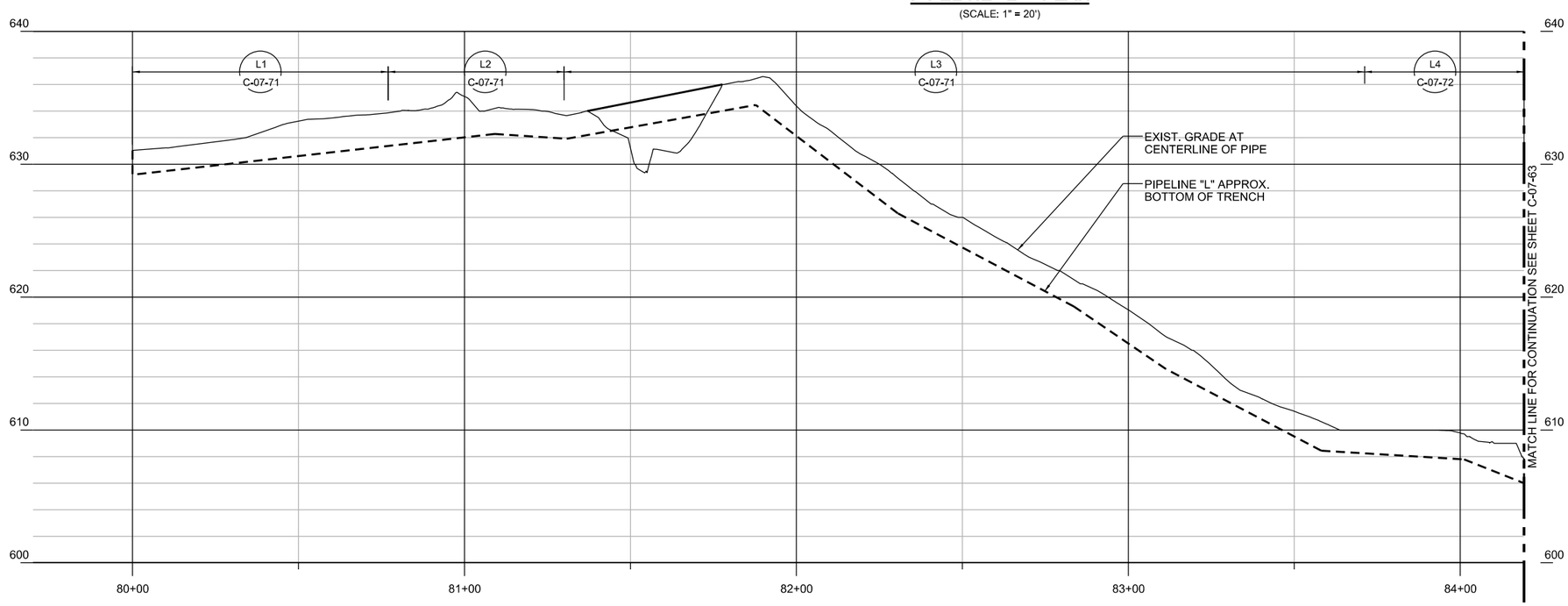

PIPELINE "L" - PROFILE

(SCALE: 1" = 20' H; 1" = 5' V)

HORIZ: SCALE: 1"=20' (0, 20, 40, 60)

VERT: SCALE: 1"=5' (0, 5, 10, 15)

- DRAFT - NOT FOR CONSTRUCTION

AECOM

2101 WEBSTER STREET SUITE 1000
OAKLAND, CA 94612-3060

PROJECT NO. 60272335

NO.	DATE	DESCRIPTION	GM/SPEC	DWN	CHKD	SUPV	APVD BY
0	9/12/12	INTERMEDIATE (60%) DESIGN SUBMITTAL					

REVISIONS

APPROVED BY

SO	XXXXX
SUPV	PD
DSGN	TL
DWN	TL
CHKD	JM
OK	PD
DATE	9/12/12
SCALES	1" = 20'-0"

TOPOCK GROUNDWATER REMEDIATION PROJECT

PIPELINE - PLAN AND PROFILE
STA 80+00 TO STA 84+46
PIPELINE "L"

GAS TRANSMISSION & DISTRIBUTION

PACIFIC GAS AND ELECTRIC COMPANY
SAN FRANCISCO, CALIFORNIA

MICROFILM
BILL OF MATL
DWG LIST
SUPSDS
SUPSD BY

SHEET NO. C-07-59 OF SHEETS REV 0

N1808

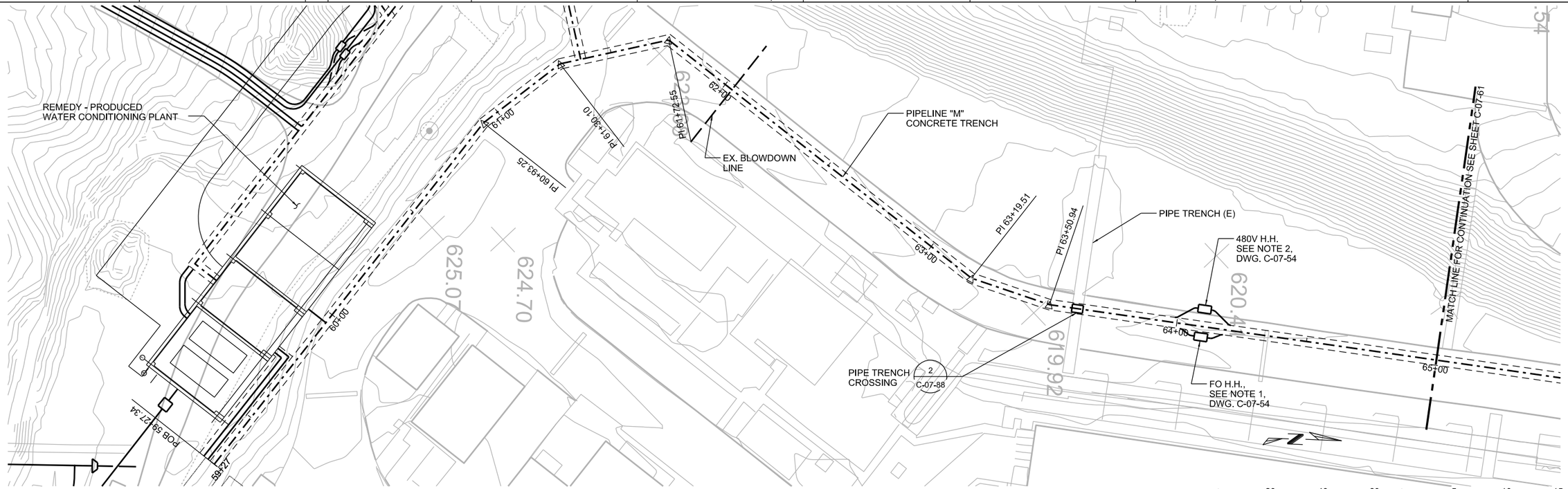

PIPELINE "M" - PLAN

(SCALE: 1" = 20')

HORIZ: SCALE: 1"=20' VERT: SCALE: 1"=5'

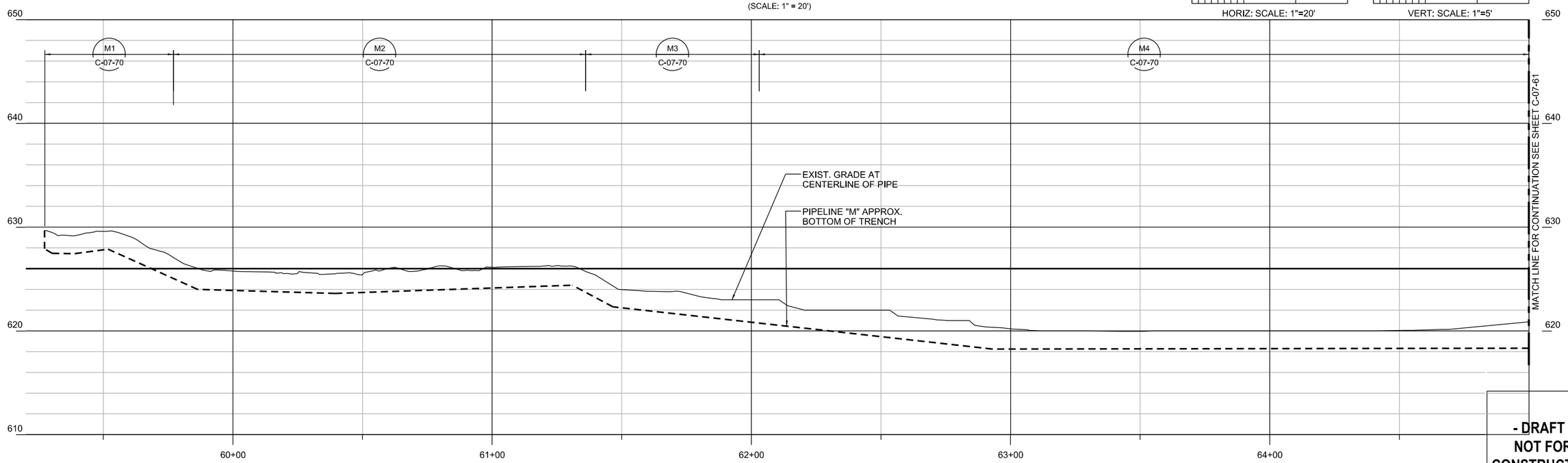

PIPELINE "M" - PROFILE

(SCALE: 1" = 20' H; 1" = 5' V)

- DRAFT - NOT FOR CONSTRUCTION

AECOM
2101 WEBSTER STREET SUITE 1000
OAKLAND, CA 94612-3060

PROJECT NO. 60272335

NO.	DATE	DESCRIPTION	GM/SPEC	DWN	CHKD	SUPV	APVD BY
0	9/12/12	INTERMEDIATE (60%) DESIGN SUBMITTAL					

REVISIONS

APPROVED BY
SO XXXXX
SUPV PD
DSGN TL
DWN TL
CHKD JM
OK PD
DATE 9/12/12
SCALES 1" = 20'-0"

TOPOCK GROUNDWATER REMEDIATION PROJECT
PIPELINE - PLAN AND PROFILE
STA 60+00 TO STA 65+00
PIPELINE "M"
GAS TRANSMISSION & DISTRIBUTION
PACIFIC GAS AND ELECTRIC COMPANY
SAN FRANCISCO, CALIFORNIA

MICROFILM
BILL OF MATL
DWG LIST
SUPSDS
SUPSD BY
SHEET NO. OF SHEETS
C-07-60
REV 0

N1808

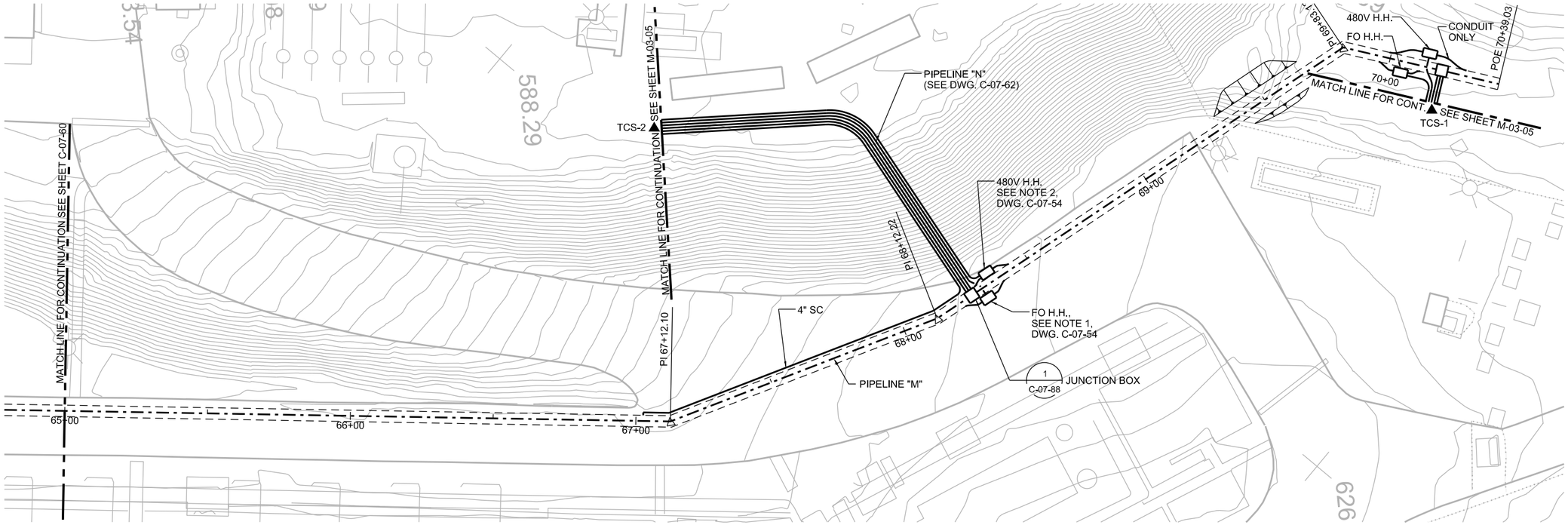

PIPELINE "M" - PLAN

(SCALE: 1" = 20')

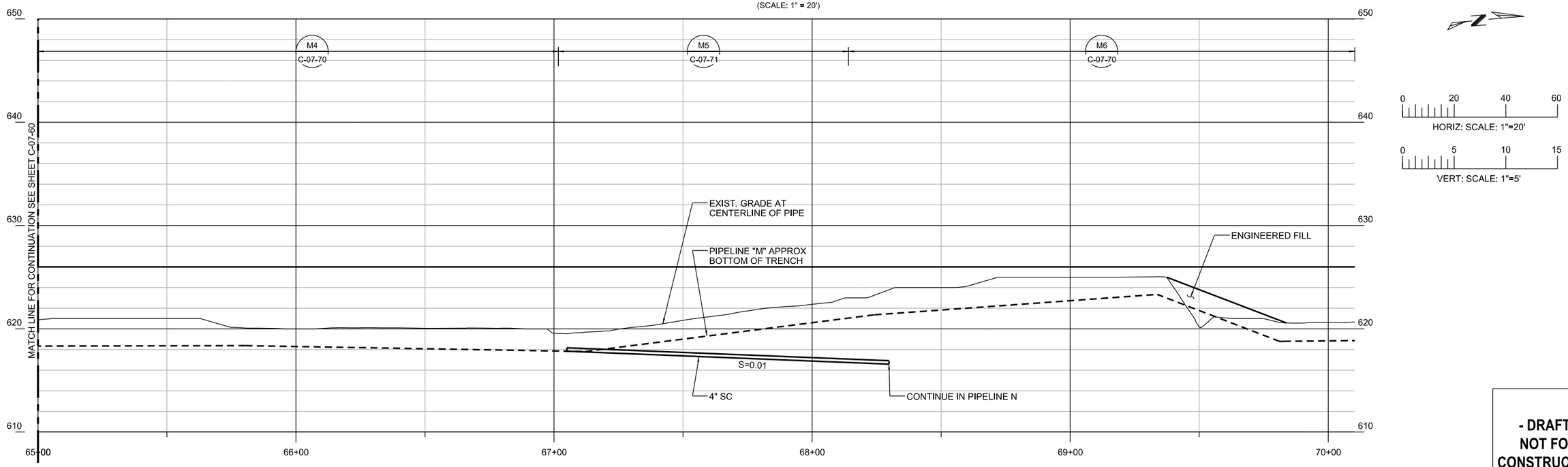

PIPELINE "M" - PROFILE

(SCALE: 1" = 20' H; 1" = 5' V)

- DRAFT -
NOT FOR CONSTRUCTION

AECOM
2101 WEBSTER STREET SUITE 1000
OAKLAND, CA 94612-3060
PROJECT NO. 60272335

NO.	DATE	DESCRIPTION	GM/SPEC	DWN	CHKD	SUPV	APVD BY
0	9/12/12	INTERMEDIATE (60%) DESIGN SUBMITTAL					

REVISIONS

APPROVED BY

SO	XXXXX
SUPV	PD
DSGN	TL
DWN	TL
CHKD	JM
OK	PD
DATE	9/12/12
SCALES	1" = 20'-0"

TOPOCK GROUNDWATER REMEDIATION PROJECT
PIPELINE - PLAN AND PROFILE
STA 65+00 TO STA 70+05
PIPELINE "M"
GAS TRANSMISSION & DISTRIBUTION
PACIFIC GAS AND ELECTRIC COMPANY
SAN FRANCISCO, CALIFORNIA

MICROFILM
BILL OF MATL
DWG LIST
SUPSDS
SUPSD BY
SHEET NO. C-07-61 OF SHEETS
REV 0

N1808

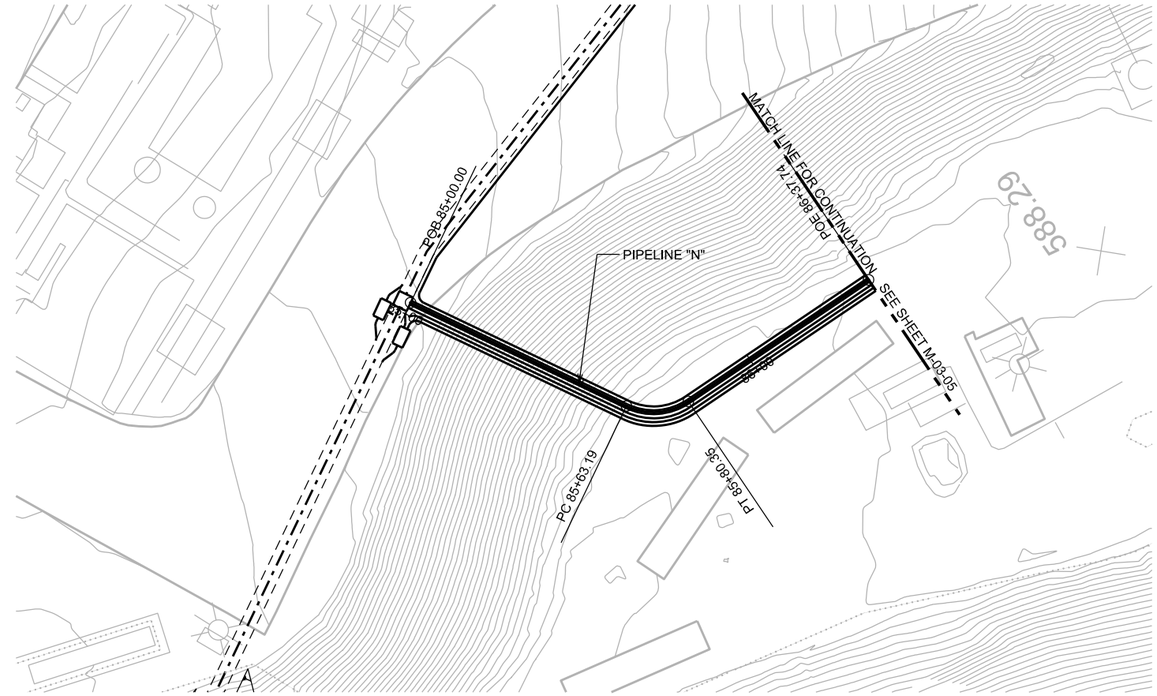

PIPELINE "N" - PLAN

(SCALE: 1" = 20')

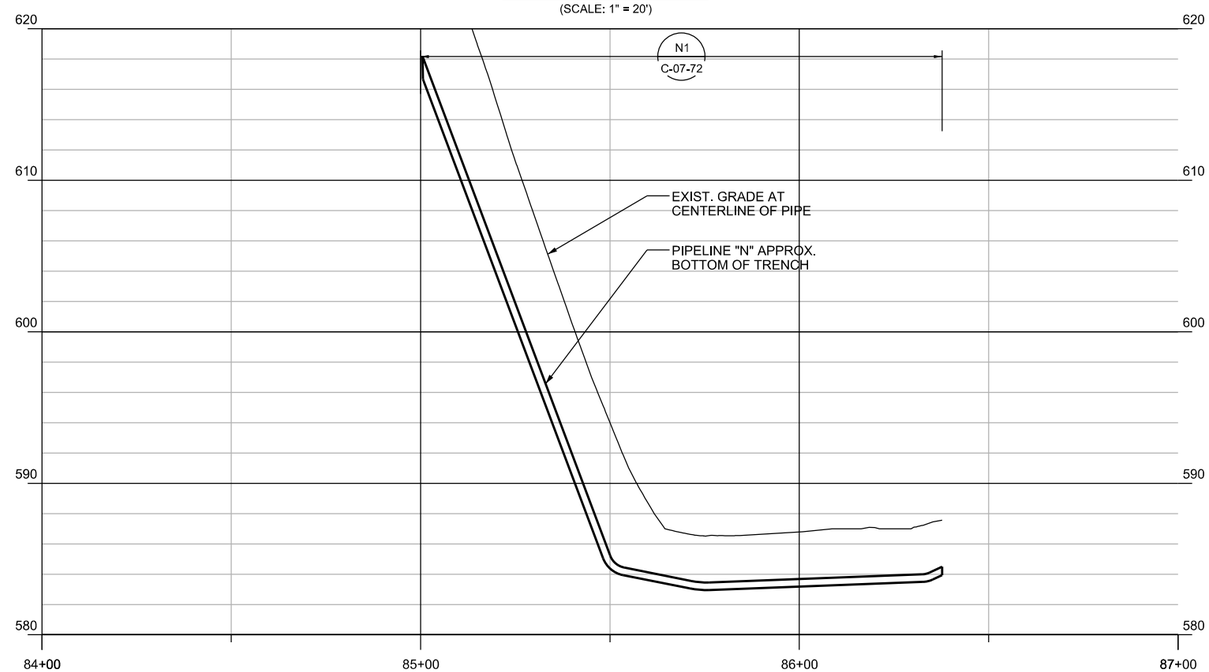

PIPELINE "N" - PROFILE

(SCALE: 1" = 20' H; 1" = 5' V)

0 20 40 60
HORIZ: SCALE: 1"=20'

0 5 10 15
VERT: SCALE: 1"=5'

- DRAFT -
NOT FOR CONSTRUCTION

AECOM
2101 WEBSTER STREET SUITE 1000
OAKLAND, CA 94612-3060

PROJECT NO. 60272335

NO.	DATE	DESCRIPTION	GM/SPEC	DWN	CHKD	SUPV	APVD BY
0	9/12/12	INTERMEDIATE (60%) DESIGN SUBMITTAL					

REVISIONS

APPROVED BY

SO	XXXXX
SUPV	PD
DSGN	TL
DWN	TL
CHKD	JM
OK	PD
DATE	9/12/12
SCALES	1" = 20'-0"

TOPOCK GROUNDWATER REMEDIATION PROJECT
PIPELINE - PLAN AND PROFILE
STA 85+00 TO STA 86+38
PIPELINE "N"
GAS TRANSMISSION & DISTRIBUTION
PACIFIC GAS AND ELECTRIC COMPANY
SAN FRANCISCO, CALIFORNIA

MICROFILM
BILL OF MATL
DWG LIST
SUPSDS
SUPSD BY
SHEET NO. OF SHEETS
C-07-62
REV 0

N1808

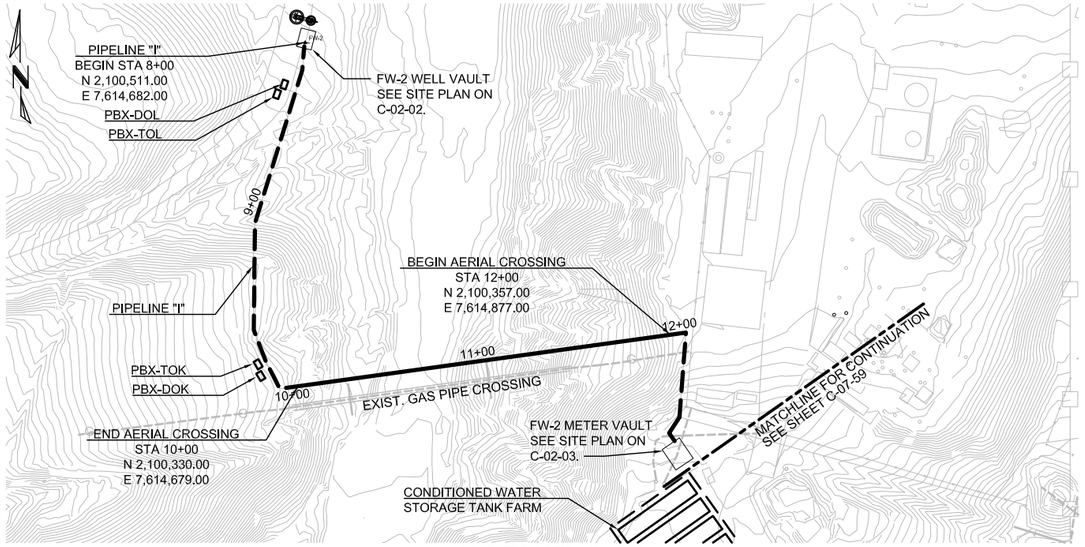

PIPELINE "I" - PLAN

(SCALE: 1" = 40' H)

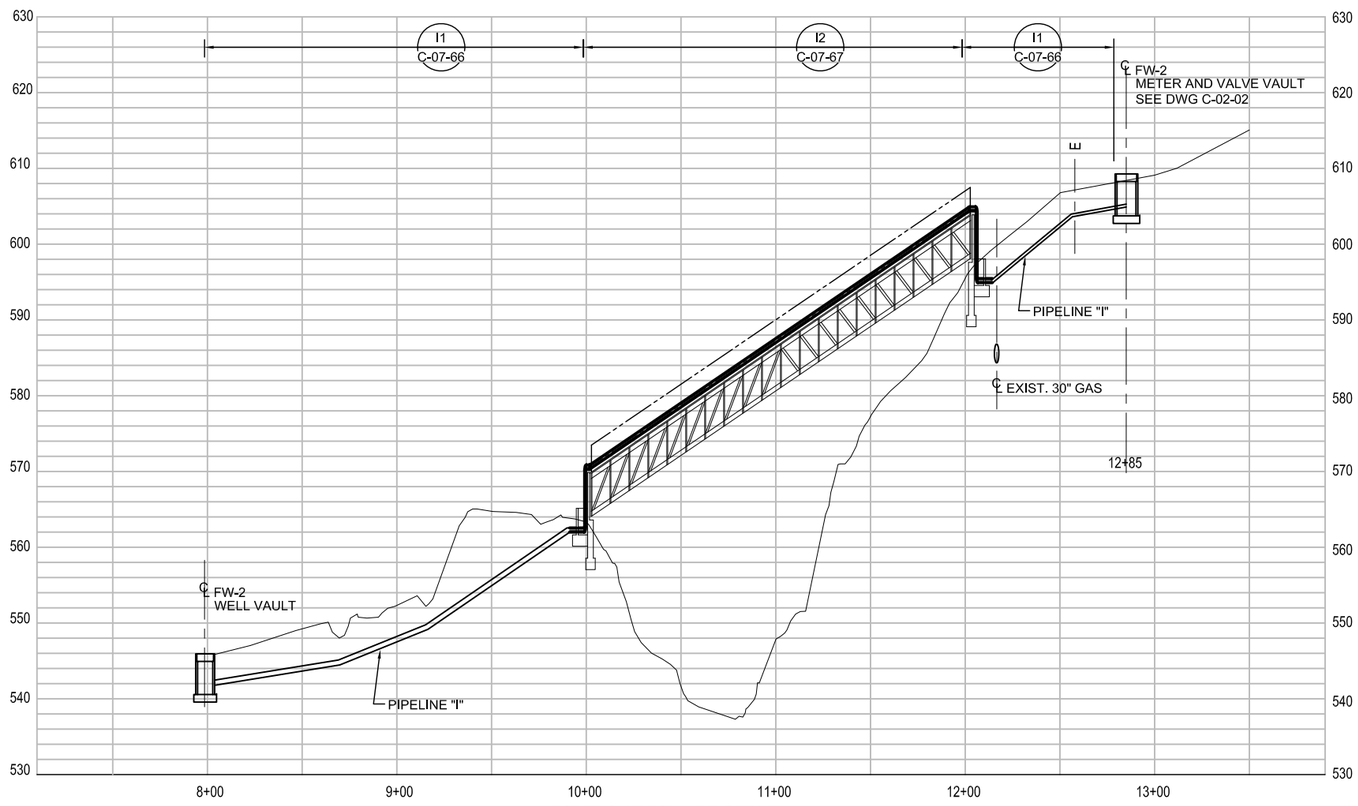

PIPELINE "I" - PROFILE

(SCALE: 1" = 40' H; 1" = 4' V)

NOTES:

1. DEPTHS OF EXISTING UTILITIES ARE UNKNOWN. ALL POTENTIAL CONFLICTS BETWEEN NEW PIPE CONSTRUCTION AND EXISTING UTILITIES WILL BE POTHOLED PRIOR TO THE 100% DESIGN. A DETERMINATION WILL BE MADE WHETHER TO RELOCATE EXISTING UTILITIES OR RE-ROUTE NEW PIPE TRENCHES AROUND EXISTING UTILITIES. THIS WILL BE INCORPORATED INTO THE 100% DESIGN.

2. THE NEW PIPELINE ALIGNMENT SHOWS CENTER OF TRENCH. THE NUMBER AND SIZES OF PIPE IN EACH TRENCH VARIES. REFER TO PIPE SECTION NUMBER ON EACH PLAN AND PROFILE SHEET AND PIPE SCHEDULE ON DRAWING C-07-03 FOR NUMBER AND SIZE OF EACH PIPE. REFER TO TRENCH DETAILS ON DRAWINGS C-07-65, C-07-66 AND C-07-67 FOR ARRANGEMENT OF PIPING IN EACH TRENCH SECTION.

0 40 80 120
HORZ: SCALE: 1"=40'

0 10 20 30
VERT: SCALE: 1"=10'

DRAFT
NOT FOR
CONSTRUCTION

E2 Consulting Engineers, Inc.
1900 Powell Street, Ste. 250
Emeryville, CA 94608
(510) 652-1164

CH2MHILL®

NO.	DATE	DESCRIPTION	GM/SPEC	DWN	CHKD	SUPV	APVD BY

REVISIONS

NO.	DATE	DESCRIPTION	GM/SPEC	DWN	CHKD	SUPV	APVD BY

REVISIONS

APPROVED BY

SO	
SUPV	
DSGN	PT
DWN	PC
CHKD	PT
OK	PT
DATE	4/5/13
SCALES	1" =40'

TOPOCK GROUNDWATER REMEDIATION PROJECT
PIPELINE - PLAN AND PROFILE
STA 8+00 TO STA 12+85
PIPELINE "I"
GAS TRANSMISSION & DISTRIBUTION
PACIFIC GAS AND ELECTRIC COMPANY
SAN FRANCISCO, CALIFORNIA

MICROFILM	
BILL OF MATL	
DWG LIST	
SUPSDS	
SUPSD BY	
SHEET NO. of	SHEETS
C-07-63	REV

PLOT DATE: $PLOTDATE PLOT TIME: $PLOTTIME

FILENAME: E2-C-XXX-0763AD.DWG

N180B

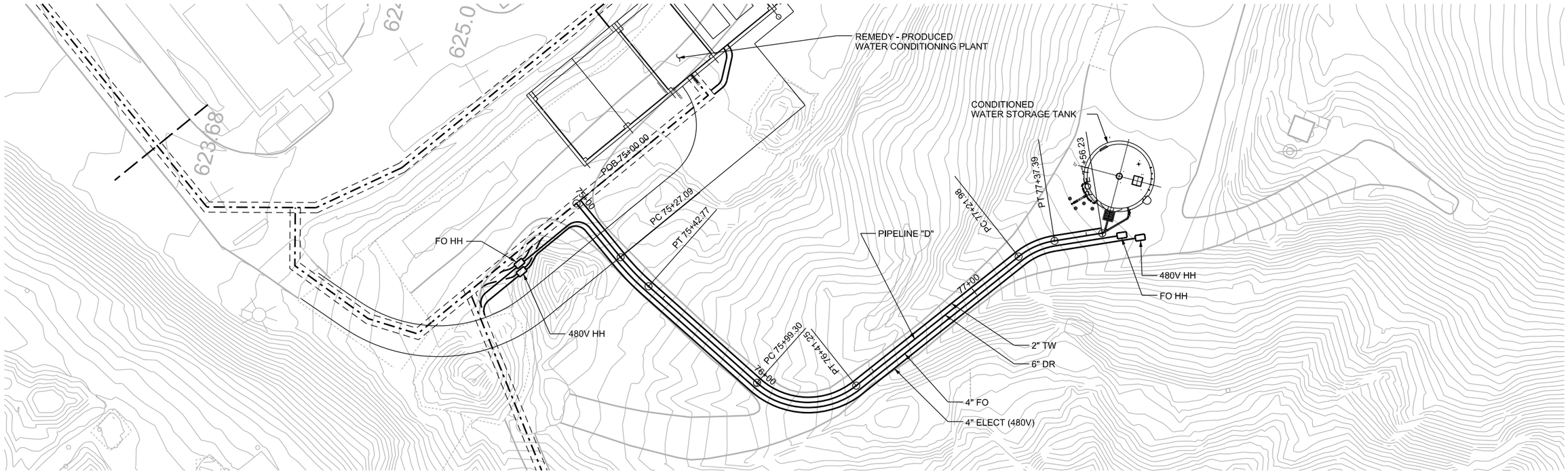

PIPELINE "D" - PLAN

(SCALE: 1" = 20')

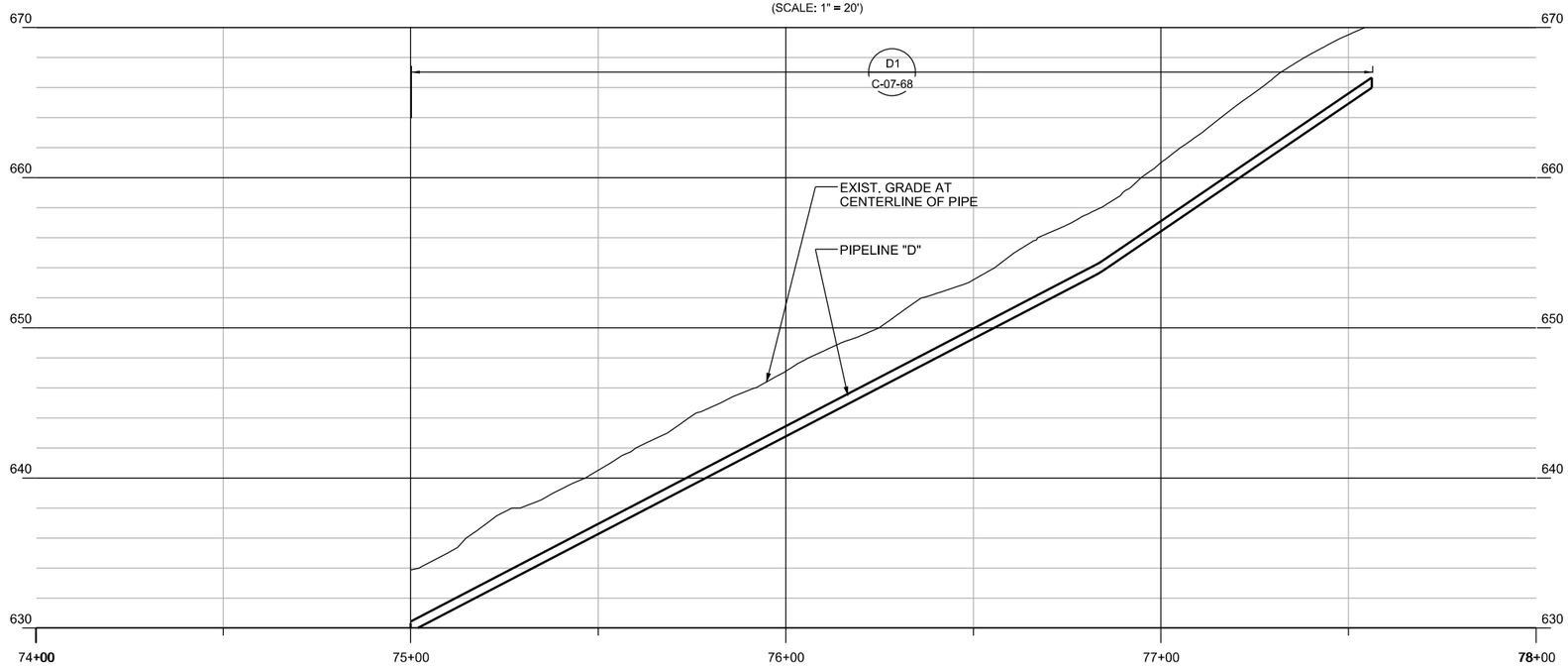

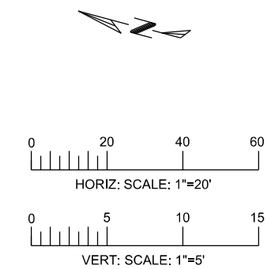

PIPELINE "D" - PROFILE

(SCALE: 1" = 20' H; 1" = 5' V)

- DRAFT -
NOT FOR CONSTRUCTION

AECOM
2101 WEBSTER STREET SUITE 1000
OAKLAND, CA 94612-3060

PROJECT NO. 60272335

NO.	DATE	DESCRIPTION	GM/SPEC	DWN	CHKD	SUPV	APVD BY
0	9	INTERMEDIATE (60%) DESIGN SUBMITTAL					

REVISIONS

APPROVED BY

SO	XXXXX
SUPV	PD
DSGN	TL
DWN	TL
CHKD	JM
OK	PD
DATE	9/12/12
SCALES	1" = 20'-0"

TOPOCK GROUNDWATER REMEDIATION PROJECT
PIPELINE - PLAN AND PROFILE
STA 75+00 TO STA 77+56
PIPELINE "D"
GAS TRANSMISSION & DISTRIBUTION
PACIFIC GAS AND ELECTRIC COMPANY
SAN FRANCISCO, CALIFORNIA

MICROFILM
BILL OF MATL
DWG LIST
SUPSDS
SUPSD BY
SHEET NO. C-07-64 OF SHEETS
REV 0

N1808

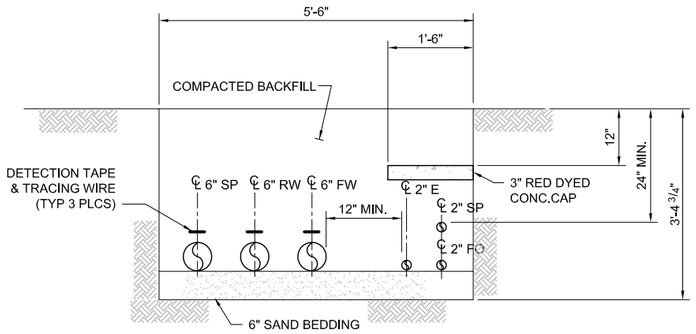

PIPELINE SECTION A1

A1 SECTION
3/4" = 1'-0"
C-07-09

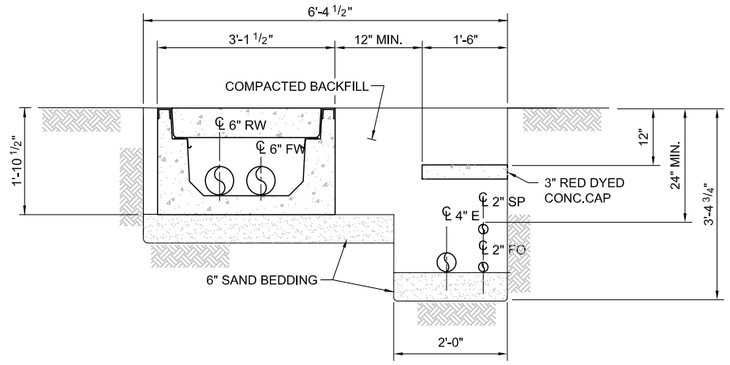

PIPELINE SECTION A2

A2 SECTION
3/4" = 1'-0"
C-07-09
C-07-10

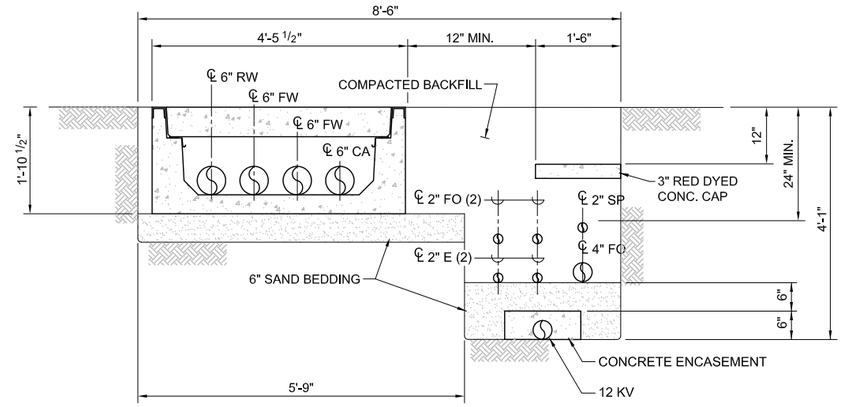

PIPELINE SECTION A3

A3 SECTION
3/4" = 1'-0"
C-07-10

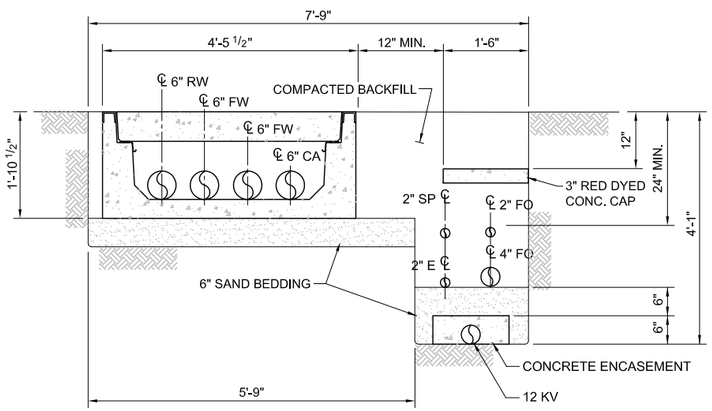

PIPELINE SECTION A4

A4 SECTION
3/4" = 1'-0"
C-07-10

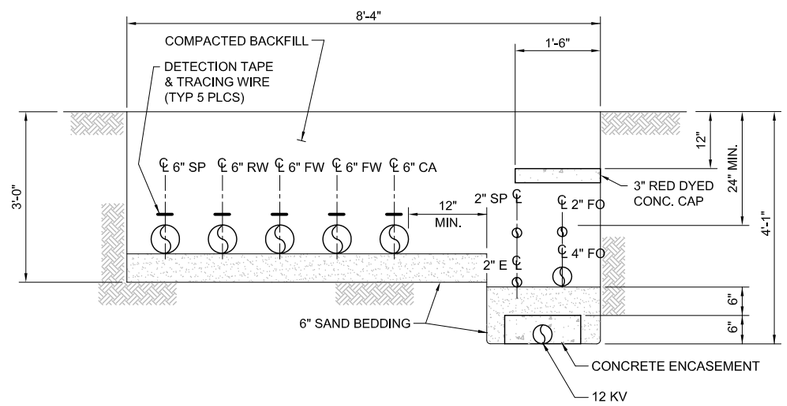

PIPELINE SECTION A5

A5 SECTION
3/4" = 1'-0"
C-07-10

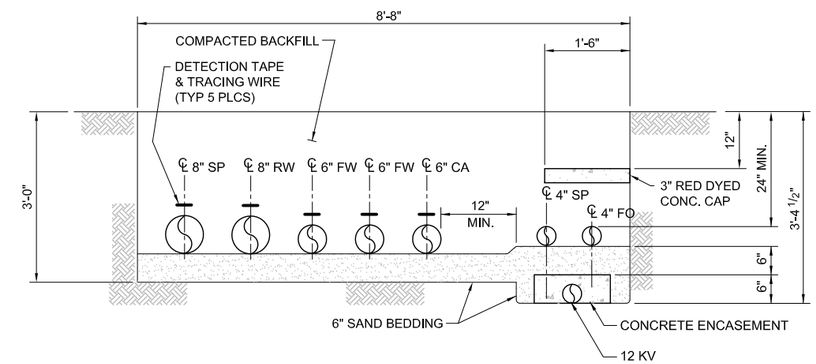

PIPELINE SECTION A6

A6 SECTION
3/4" = 1'-0"
C-07-10
C-07-11
C-07-12
C-07-13

NOTE:

1. REFER TO C-07-03 FOR LOCATION OF EACH PIPELINE SECTION.

DRAFT
NOT FOR
CONSTRUCTION

E2 Consulting Engineers, Inc.
1900 Powell Street, Ste. 250
Emeryville, CA 94608
(510) 652-1164

CH2MHILL®

NO.	DATE	DESCRIPTION	GM/SPEC	DWN	CHKD	SUPV	APVD BY

REVISIONS

NO.	DATE	DESCRIPTION	GM/SPEC	DWN	CHKD	SUPV	APVD BY

REVISIONS

APPROVED BY
SO
SUPV
DSGN PT
DWN PC
CHKD PT
OK PT
DATE 4/5/13
SCALES AS SHOWN

TOPOCK GROUNDWATER REMEDIATION PROJECT

TRENCH SECTIONS

GAS TRANSMISSION & DISTRIBUTION
PACIFIC GAS AND ELECTRIC COMPANY
SAN FRANCISCO, CALIFORNIA

MICROFILM
BILL OF MATL
DWG LIST
SUPSDS
SUPSD BY
SHEET NO. of SHEETS
C-07-65
REV

FILENAME: E2-C-XXX-0765AD.DWG
PLOT DATE: $PLOTDATE PLOT TIME: $PLOTTIME

N1808

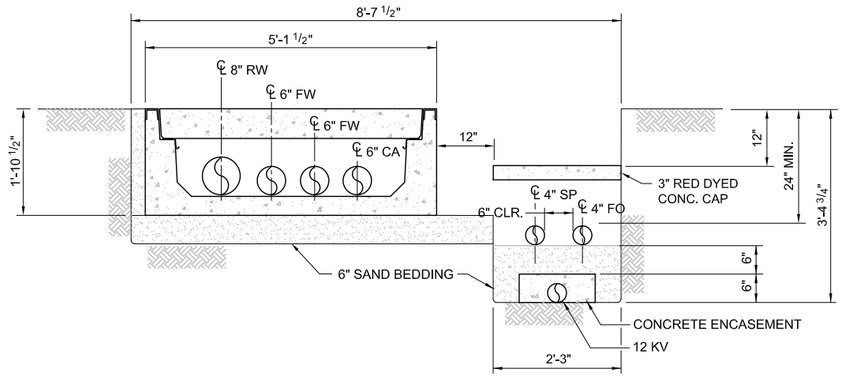

PIPELINE SECTION A7

A7 SECTION
3/4" = 1'-0"
C-07-11
C-07-12

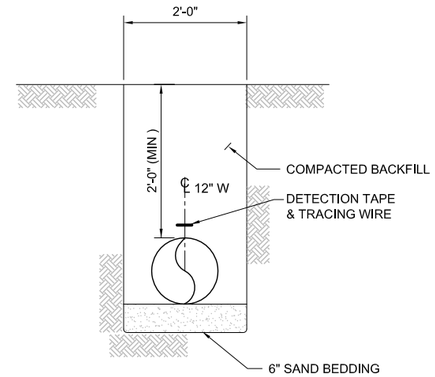

PIPELINE SECTION B2, B5, B7, B9

B1 SECTION
3/4" = 1'-0"
C-07-17
C-07-18
C-07-19
C-07-20
C-07-21
C-07-22

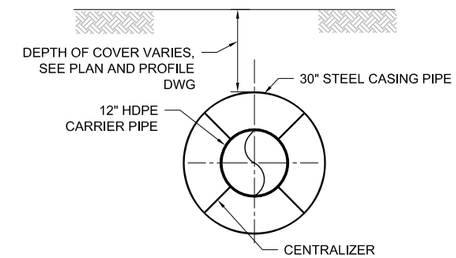

PIPELINE SECTION B6, B8

B2 SECTION
3/4" = 1'-0"
C-07-19
C-07-20
C-07-22

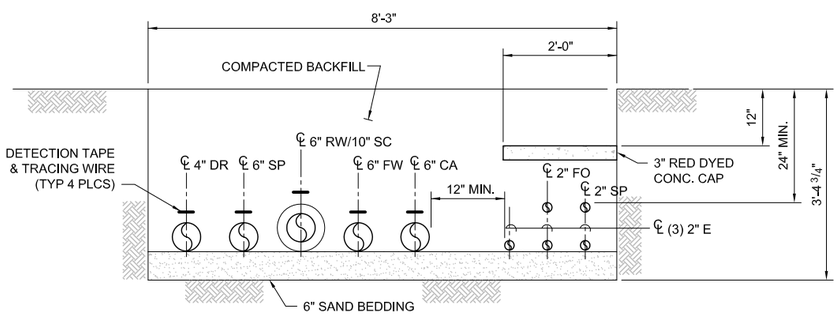

PIPELINE SECTION H1

H1 SECTION
3/4" = 1'-0"
C-07-14

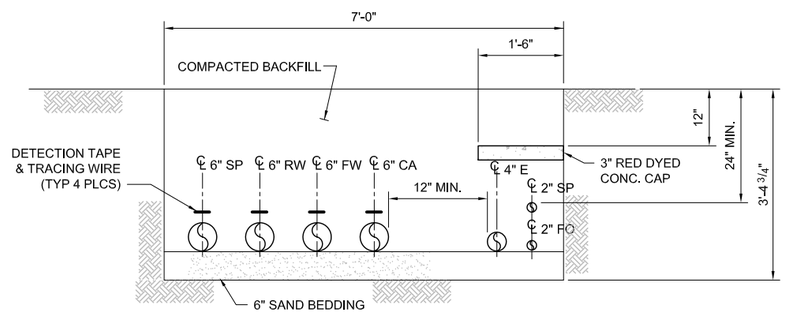

PIPELINE SECTION H2

H2 SECTION
3/4" = 1'-0"
C-07-14

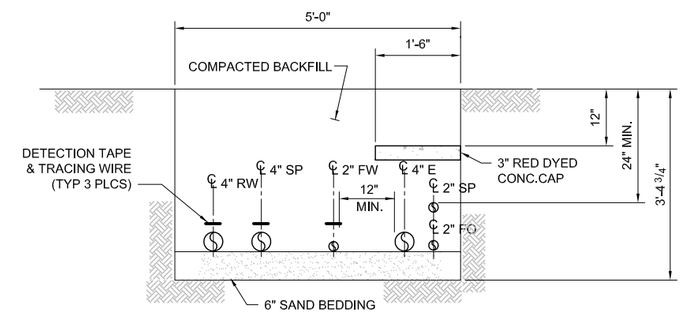

PIPELINE SECTION I1, I3

I1 SECTION
3/4" = 1'-0"
C-07-63

NOTE:

1. REFER TO C-07-03 FOR LOCATION OF EACH PIPELINE SECTION.

DRAFT
NOT FOR
CONSTRUCTION

E2 Consulting Engineers, Inc.
1900 Powell Street, Ste. 250
Emeryville, CA 94608
(510) 652-1164

CH2MHILL®

NO.	DATE	DESCRIPTION	GM/SPEC	DWN	CHKD	SUPV	APVD BY

REVISIONS

NO.	DATE	DESCRIPTION	GM/SPEC	DWN	CHKD	SUPV	APVD BY

REVISIONS

APPROVED BY
SO
SUPV
DSGN PT
DWN PC
CHKD PT
OK PT
DATE 4/5/13
SCALES 3/4"=1'-0"

TOPOCK GROUNDWATER REMEDIATION PROJECT

TRENCH SECTIONS

GAS TRANSMISSION & DISTRIBUTION
PACIFIC GAS AND ELECTRIC COMPANY
SAN FRANCISCO, CALIFORNIA

MICROFILM
BILL OF MATL
DWG LIST
SUPSDS
SUPSD BY
SHEET NO. of SHEETS
C-07-66
REV

FILENAME: E2-C-XXX-0766AD.DWG
PLOT DATE: $PLOTDATE PLOT TIME: $PLOTTIME

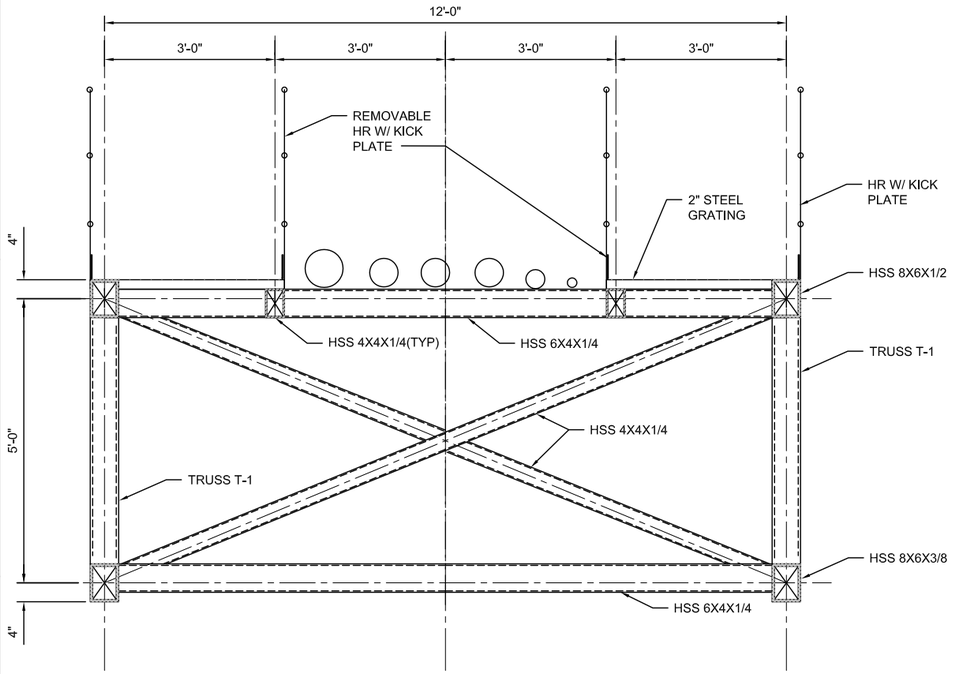

AERIAL CROSSING PIPELINE SECTION A7

A8 SECTION
3/4" = 1'-0"
C-07-11

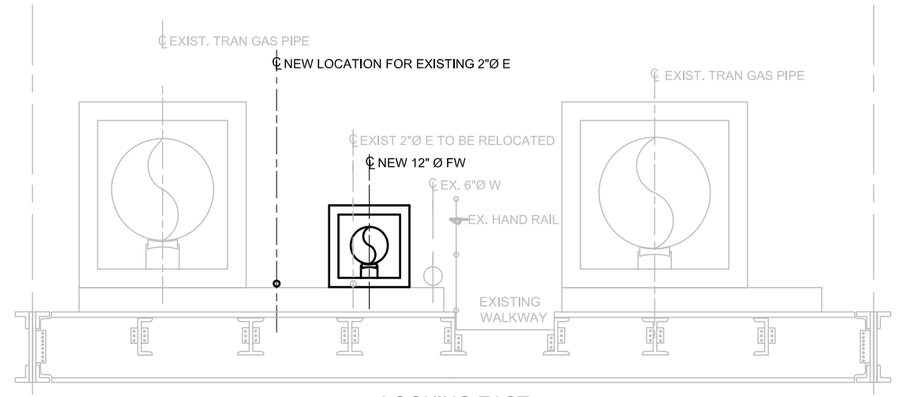

LOOKING EAST

PIPELINE SECTION B4

B3 SECTION
3/4" = 1'-0"
C-07-18

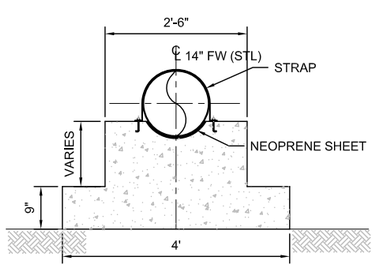

PIPELINE SECTION B3

B4 SECTION
3/4" = 1'-0"
C-07-17
C-07-18

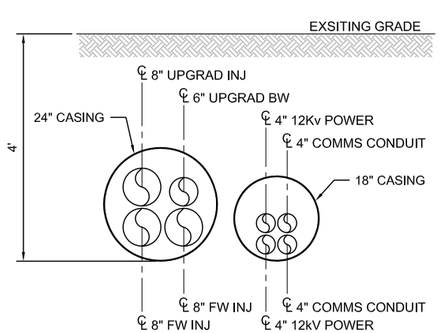

PIPELINE SECTION A11

A9 SECTION
3/4" = 1'-0"
C-07-13

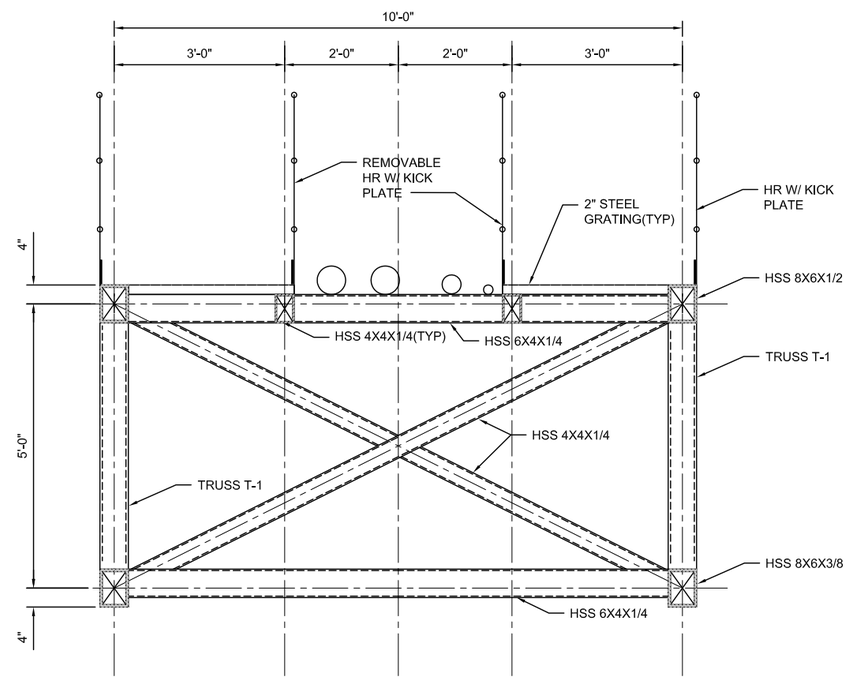

AERIAL CROSSING PIPELINE SECTION I2

I2 SECTION
3/4" = 1'-0"
C-07-63

NOTE:

1. REFER TO C-07-03 FOR LOCATION OF EACH PIPELINE SECTION.

DRAFT NOT FOR CONSTRUCTION

E2 Consulting Engineers, Inc.
1900 Powell Street, Ste. 250
Emeryville, CA 94608
(510) 652-1164

CH2MHILL®

NO.	DATE	DESCRIPTION	GM/SPEC	DWN	CHKD	SUPV	APVD BY

REVISIONS

NO.	DATE	DESCRIPTION	GM/SPEC	DWN	CHKD	SUPV	APVD BY

REVISIONS

APPROVED BY	
SO	
SUPV	
DSGN	PT
DWN	PC
CHKD	PT
OK	PT
DATE	4/5/13
SCALES	3/4"=1'-0"

TOPOCK GROUNDWATER REMEDIATION PROJECT

PIPELINE SECTIONS

GAS TRANSMISSION & DISTRIBUTION
PACIFIC GAS AND ELECTRIC COMPANY
SAN FRANCISCO, CALIFORNIA

MICROFILM	
BILL OF MATL	
DWG LIST	
SUPSDS	
SUPSD BY	
SHEET NO. of SHEETS	
C-07-67	REV

PLOT DATE: $PLOTDATE PLOT TIME: $PLOTTIME

FILENAME: E2-C-XXX-0767AD.DWG

N180B

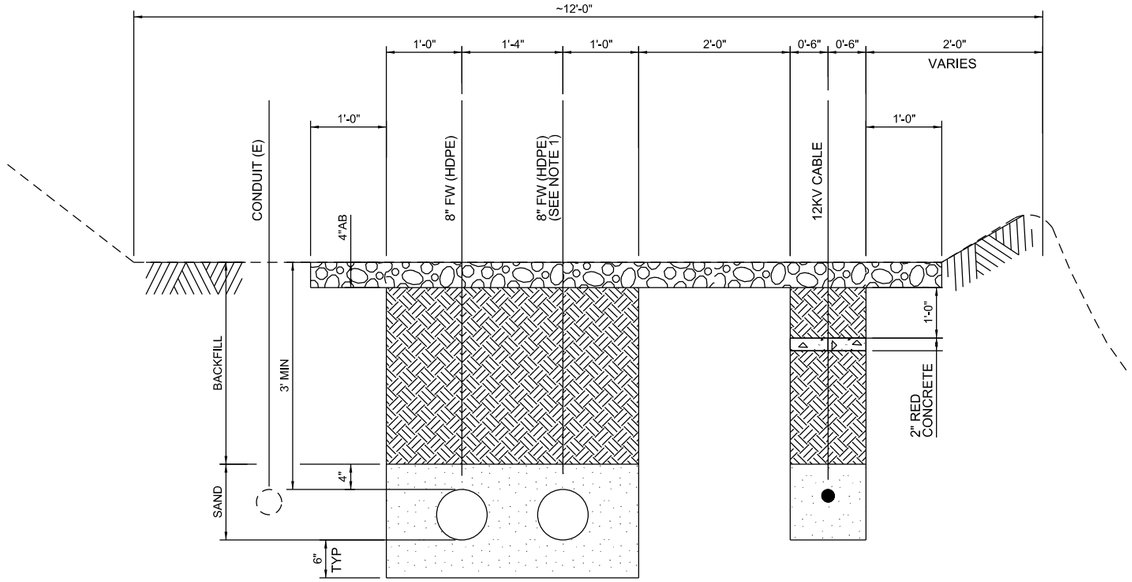

PIPELINE J

J1 SECTION 1"=1'-0"

C-07-54

NOTE:

1. ALIGNMENT DATA SHOWN ON PLAN IS BASED ON THIS PIPE.

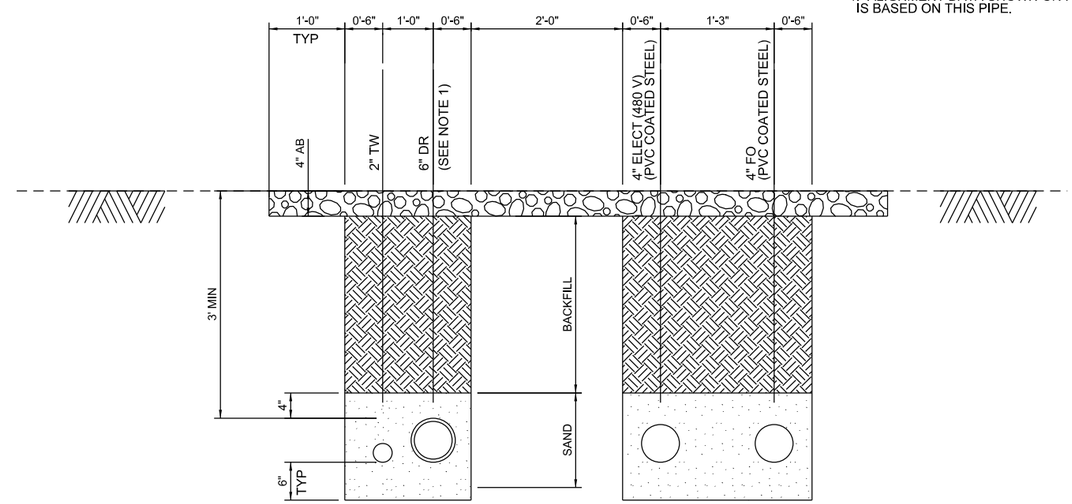

PIPELINE D

D1 SECTION 1"=1'-0"

C-07-64

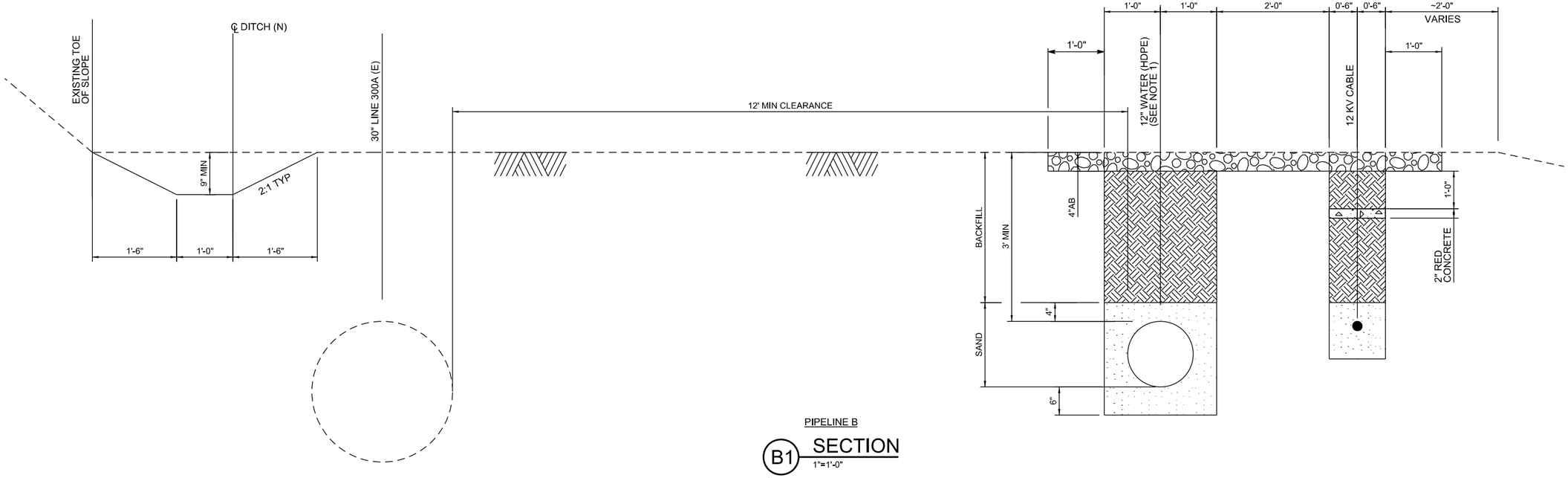

PIPELINE B

B1 SECTION 1"=1'-0"

C-07-15
C-07-16

- DRAFT - NOT FOR CONSTRUCTION

AECOM

2101 WEBSTER STREET SUITE 1000
OAKLAND, CA 94612-3060

PROJECT NO. 60272335

NO.	DATE	DESCRIPTION	GM/SPEC	DWN	CHKD	SUPV	APVD BY
0	9/12/12	INTERMEDIATE (60%) DESIGN SUBMITTAL					

REVISIONS

APPROVED BY

SO	XXXXX
SUPV	PD
DSGN	TL
DWN	TL
CHKD	JM
OK	PD
DATE	9/12/12
SCALES	1" = 1'-0"

TOPOCK GROUNDWATER REMEDIATION PROJECT

PIPELINE SECTIONS

GAS TRANSMISSION & DISTRIBUTION
PACIFIC GAS AND ELECTRIC COMPANY
SAN FRANCISCO, CALIFORNIA

MICROFILM	
BILL OF MATL	
DWG LIST	
SUPSOS	
SUPSO BY	
SHEET NO.	OF SHEETS
C-07-68	REV 0

N1808

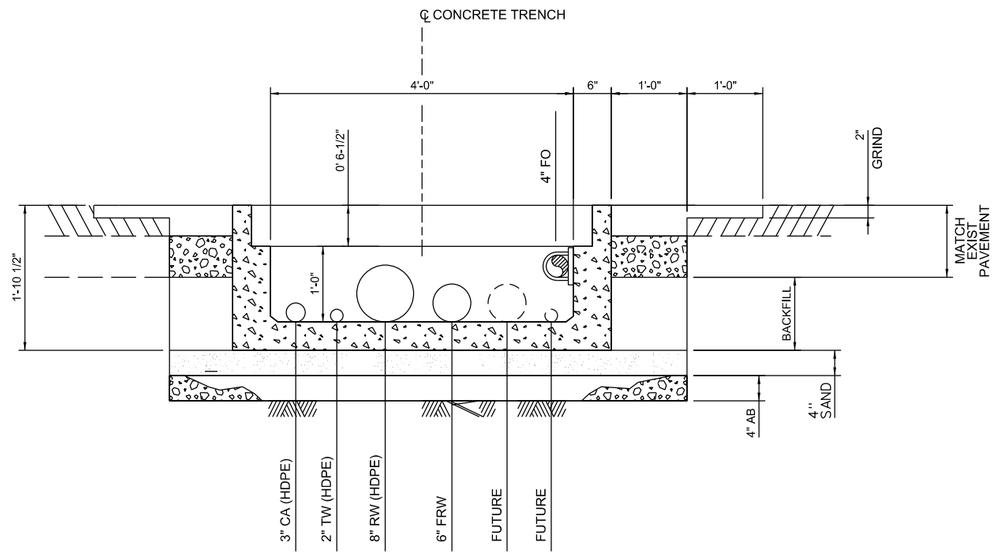

PIPELINE F

F2 SECTION
1"=1'-0"
C-07-55
C-07-56

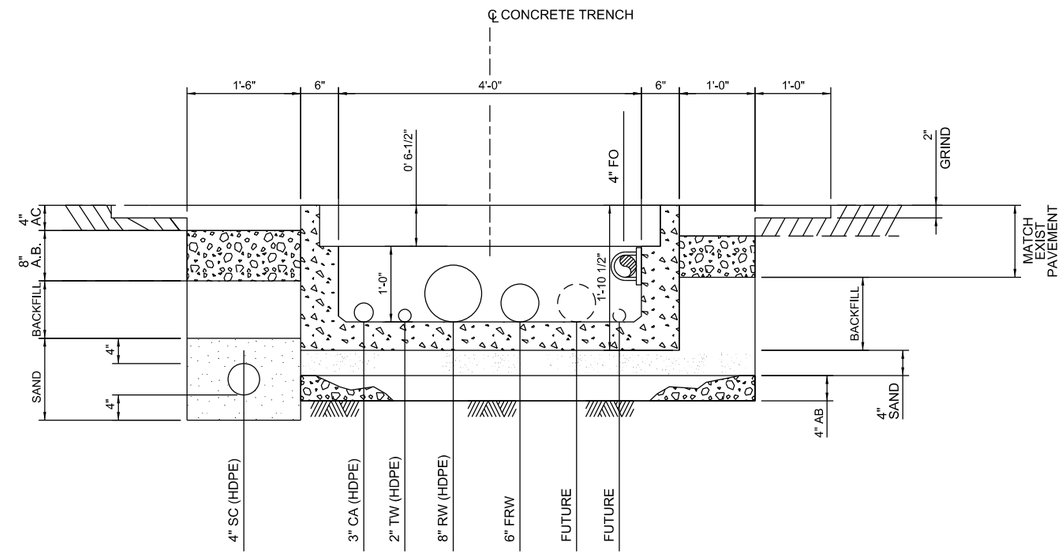

PIPELINE F

F4 SECTION
1"=1'-0"
C-07-56

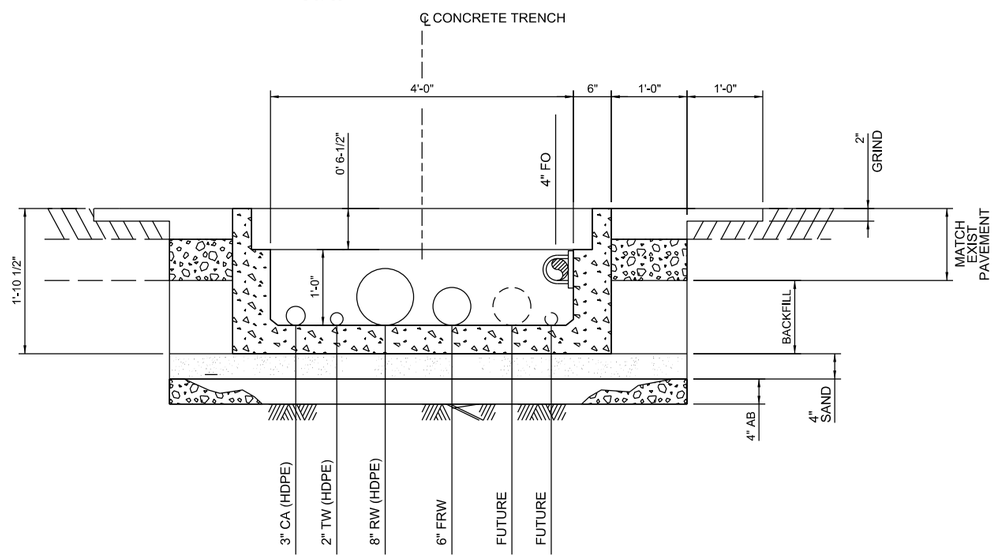

PIPELINE F

F3 SECTION
1"=1'-0"
C-07-57

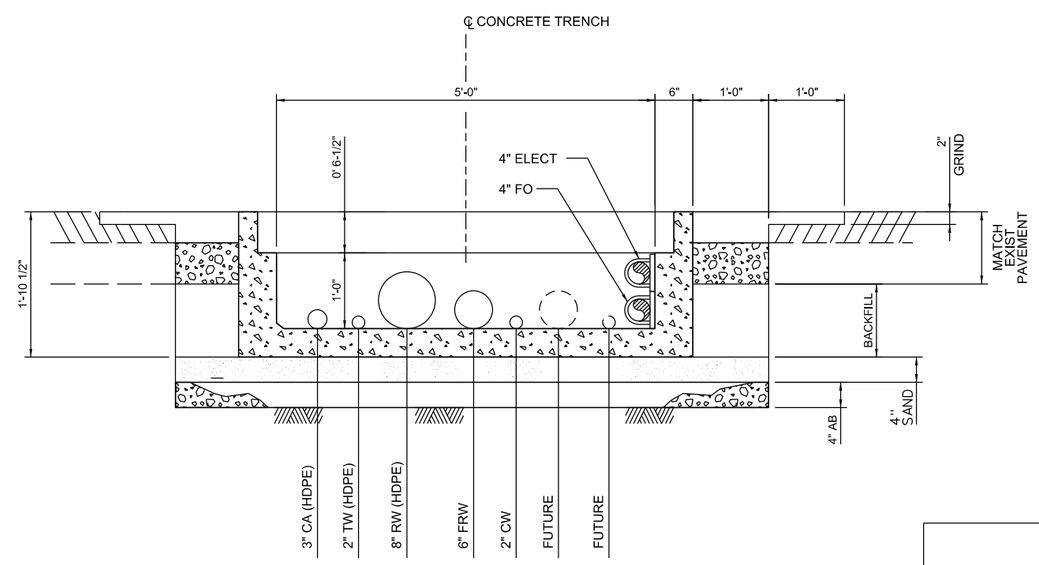

PIPELINE F

F6 SECTION
1"=1'-0"
C-07-57

- DRAFT - NOT FOR CONSTRUCTION

AECOM
2101 WEBSTER STREET SUITE 1000
OAKLAND, CA 94612-3060

PROJECT NO. 60272335

NO.	DATE	DESCRIPTION	GM/SPEC	DWN	CHKD	SUPV	APVD BY
0	9/12/12	INTERMEDIATE (60%) DESIGN SUBMITTAL					

REVISIONS

APPROVED BY

SO	XXXXX
SUPV	PD
DSGN	TL
DWN	TL
CHKD	JM
OK	PD
DATE	9/12/12
SCALES	1" = 1'-0"

TOPOCK GROUNDWATER REMEDIATION PROJECT

PIPELINE SECTIONS

GAS TRANSMISSION & DISTRIBUTION
PACIFIC GAS AND ELECTRIC COMPANY
SAN FRANCISCO, CALIFORNIA

MICROFILM
BILL OF MATL
DWG LIST
SUPSDS
SUPSD BY
SHEET NO. OF SHEETS
C-07-69
REV 0

N1808

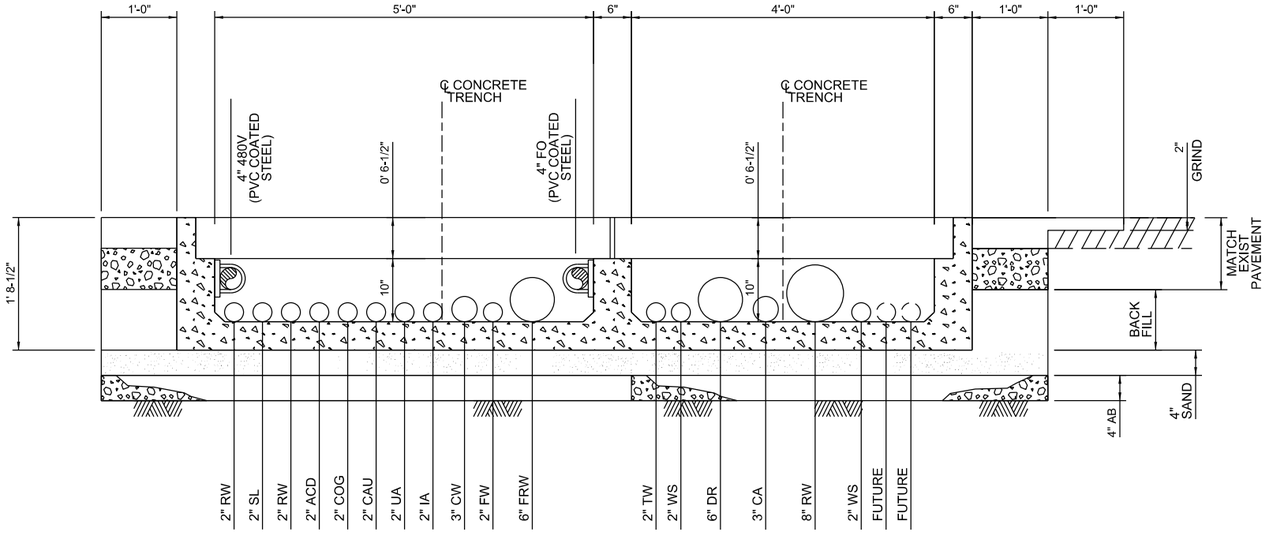

PIPELINE M

M1 SECTION 1"=1'-0"

C-07-60

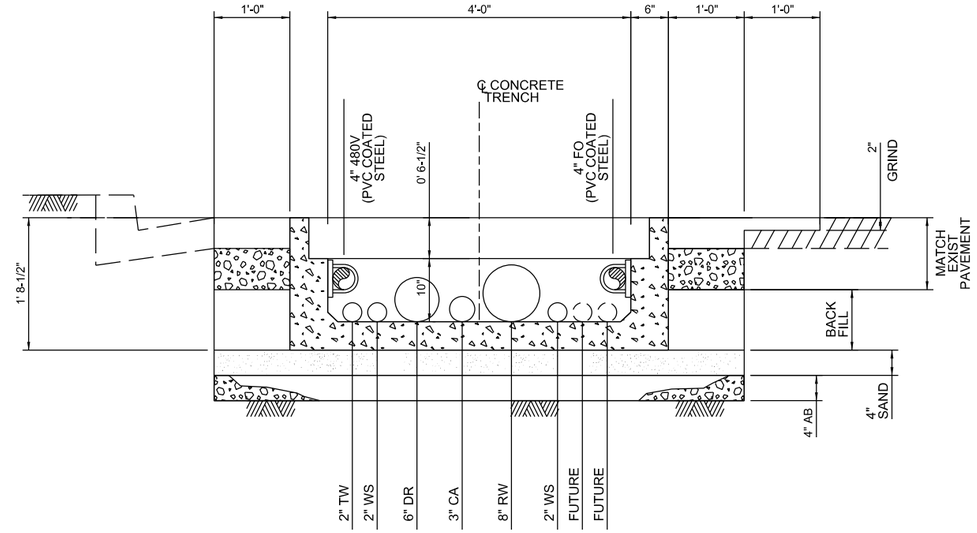

PIPELINE M

M2 SECTION 1"=1'-0"

C-07-60

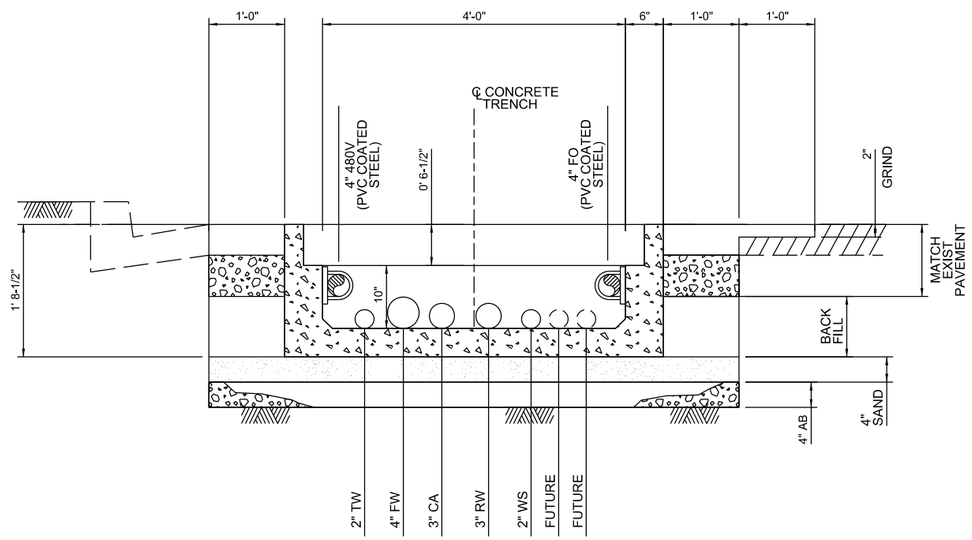

PIPELINE M

M3 SECTION 1"=1'-0"

C-07-60

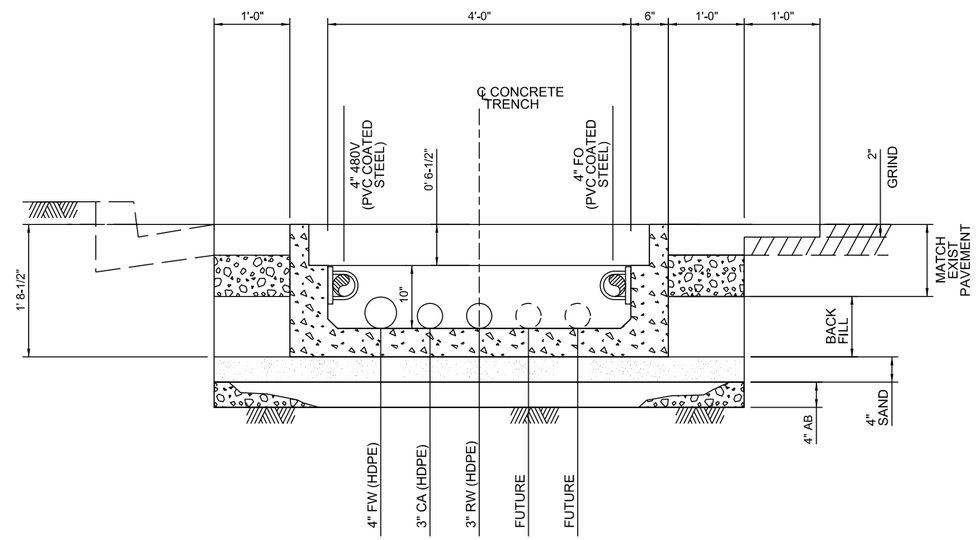

PIPELINE M

M4 SECTION 1"=1'-0"

C-07-60
C-07-61

- DRAFT - NOT FOR CONSTRUCTION

AECOM
2101 WEBSTER STREET SUITE 1000
OAKLAND, CA 94612-3060

PROJECT NO. 60272335

NO.	DATE	DESCRIPTION	GM/SPEC	DWN	CHKD	SUPV	APVD BY
0	9/12/12	INTERMEDIATE (60%) DESIGN SUBMITTAL					

REVISIONS

APPROVED BY		
	SO	XXXXX
	SUPV	PD
	DSGN	TL
	DWN	TL
	CHKD	JM
	OK	PD
	DATE	9/12/12
	SCALES	1" = 1'-0"

TOPOCK GROUNDWATER REMEDIATION PROJECT

PIPELINE SECTIONS

GAS TRANSMISSION & DISTRIBUTION
PACIFIC GAS AND ELECTRIC COMPANY
SAN FRANCISCO, CALIFORNIA

MICROFILM
BILL OF MATL
DWG LIST
SUPSDS
SUPSD BY
SHEET NO. C-07-70 OF SHEETS
REV 0

N1808

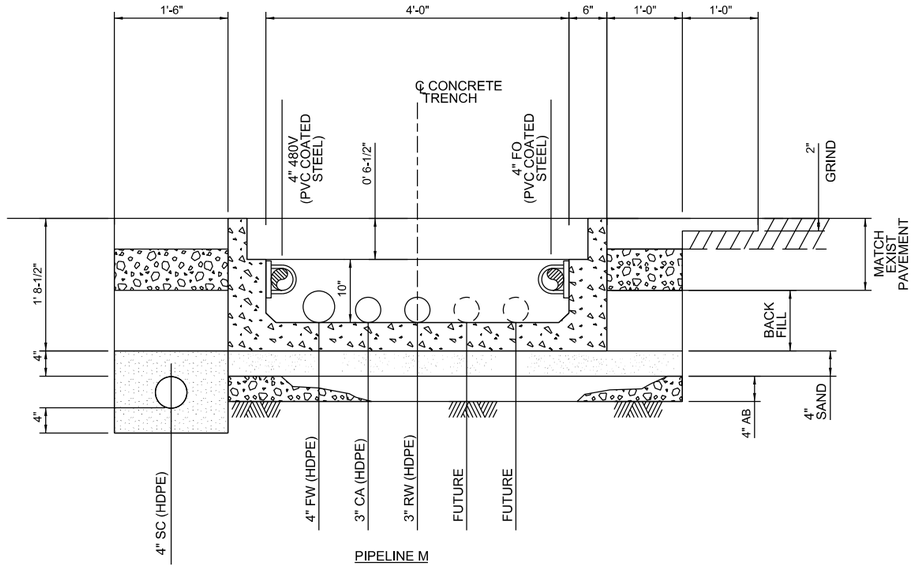

M5 SECTION
1"=1'-0"
C-07-61

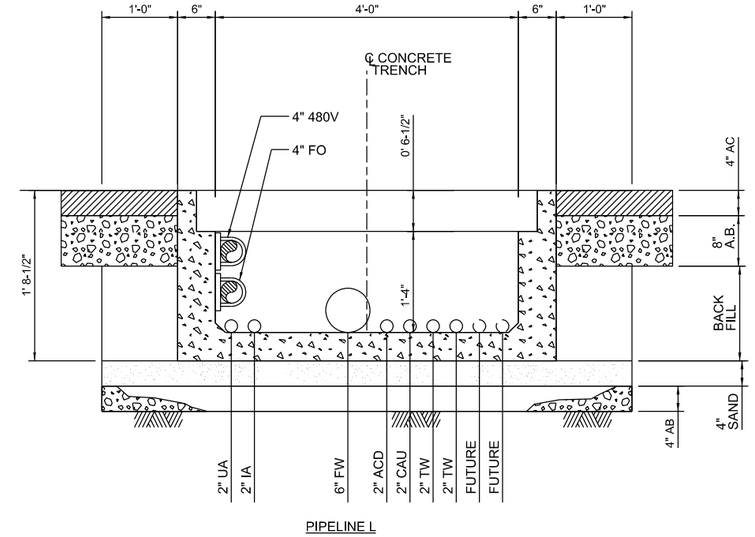

L1 SECTION
1"=1'-0"
C-07-59

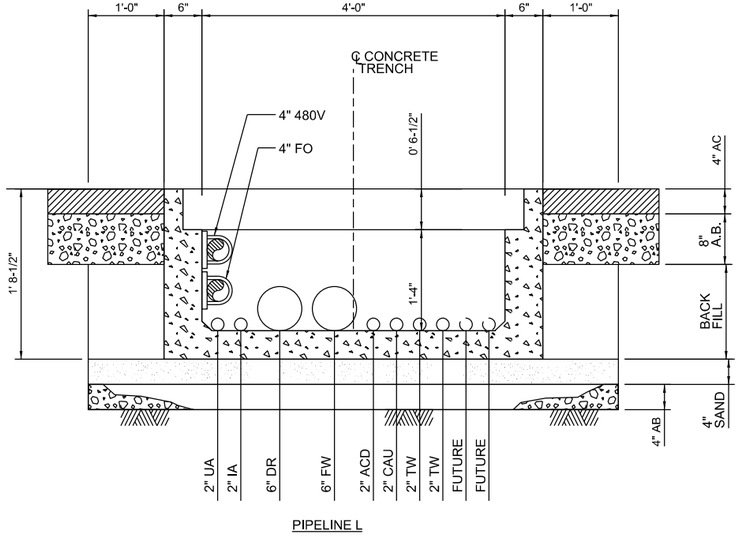

L2 SECTION
1"=1'-0"
C-07-59

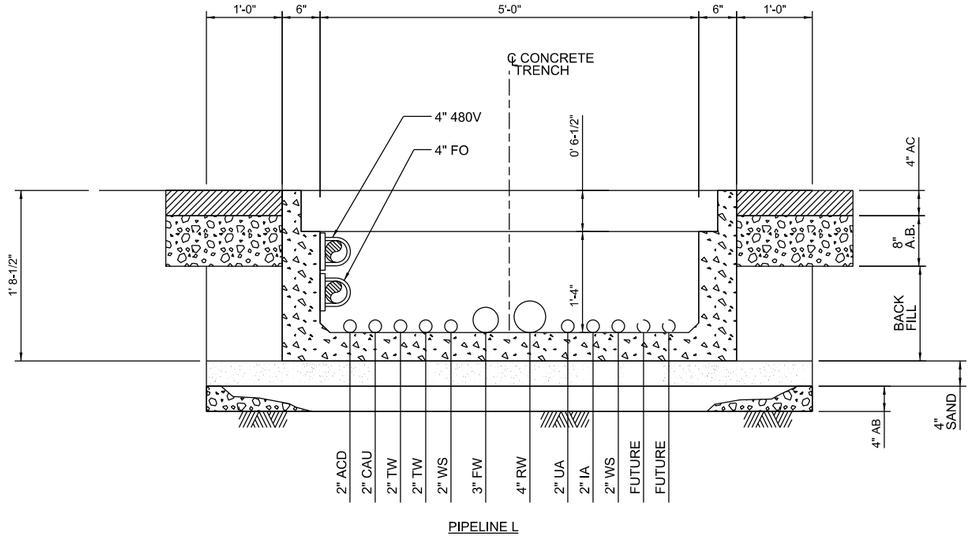

L3 SECTION
1"=1'-0"
C-07-59

- DRAFT - NOT FOR CONSTRUCTION

AECOM
2101 WEBSTER STREET SUITE 1000
OAKLAND, CA 94612-3060
PROJECT NO. 60272335

NO.	DATE	DESCRIPTION	GM/SPEC	DWN	CHKD	SUPV	APVD BY
0	9/12/12	INTERMEDIATE (60%) DESIGN SUBMITTAL					

REVISIONS

APPROVED BY

SO	XXXXX
SUPV	PD
DSGN	TL
DWN	TL
CHKD	JM
OK	PD
DATE	9/12/12
SCALES	1" = 1'-0"

TOPOCK GROUNDWATER REMEDIATION PROJECT

PIPELINE SECTIONS

GAS TRANSMISSION & DISTRIBUTION
PACIFIC GAS AND ELECTRIC COMPANY
SAN FRANCISCO, CALIFORNIA

MICROFILM
BILL OF MATL
DWG LIST
SUPSDS
SUPSD BY
SHEET NO. OF SHEETS
C-07-71
REV 0

N1808

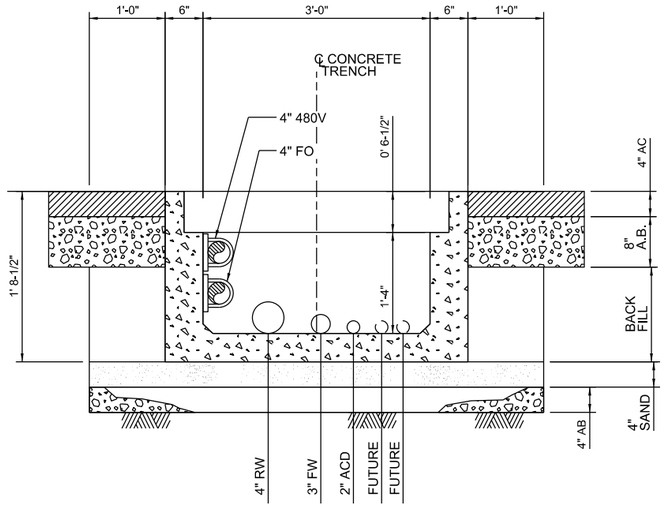

PIPELINE L

L4 SECTION 1"=1'-0"

C-07-59

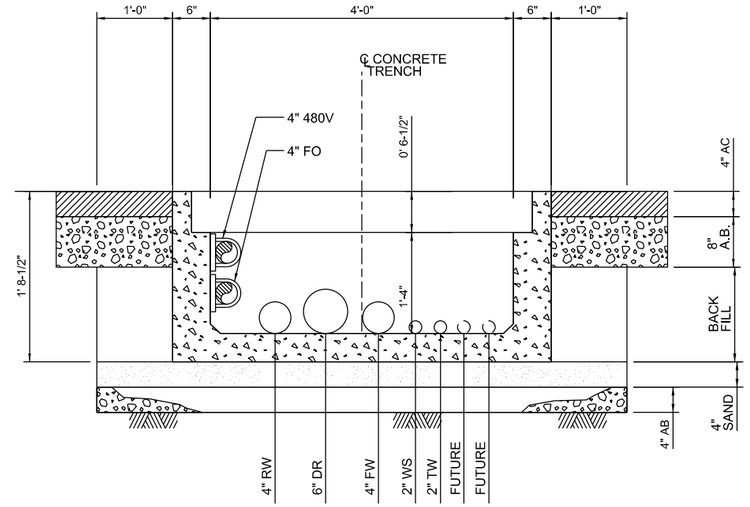

PIPELINE L

K1 SECTION 1"=1'-0"

C-07-58

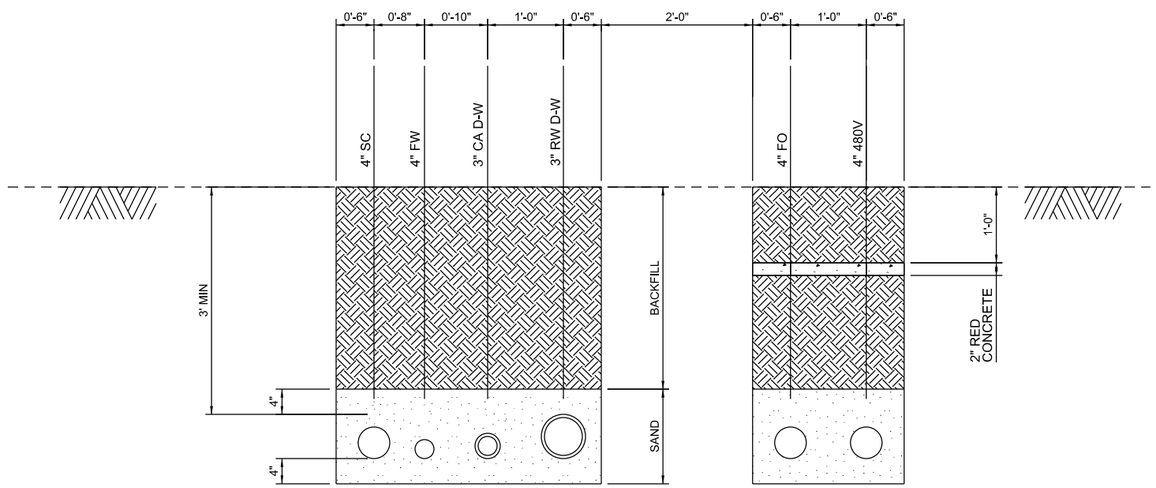

PIPELINE N

N1 SECTION 1"=1'-0"

C-07-62

- DRAFT - NOT FOR CONSTRUCTION

AECOM

2101 WEBSTER STREET SUITE 1000
OAKLAND, CA 94612-3060

PROJECT NO. 60272335

NO.	DATE	DESCRIPTION	GM/SPEC	DWN	CHKD	SUPV	APVD BY
0	9/12/12	INTERMEDIATE (60%) DESIGN SUBMITTAL					

REVISIONS

APPROVED BY

SO	XXXXX
SUPV	PD
DSGN	TL
DWN	TL
CHKD	JM
OK	PD
DATE	9/12/12
SCALES	1" = 1'-0"

TOPOCK GROUNDWATER REMEDIATION PROJECT

PIPELINE SECTIONS

GAS TRANSMISSION & DISTRIBUTION
PACIFIC GAS AND ELECTRIC COMPANY
SAN FRANCISCO, CALIFORNIA

MICROFILM
BILL OF MATL
DWG LIST
SUPSOS
SUPSO BY
SHEET NO. OF SHEETS

C-07-72

REV 0

N1808

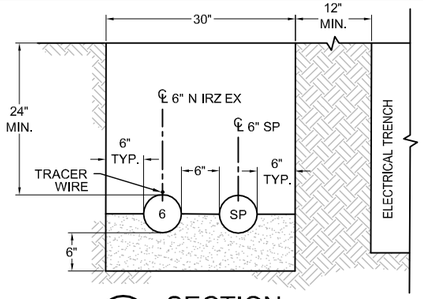

C1 SECTION
1"=1'-0"
C-07-23

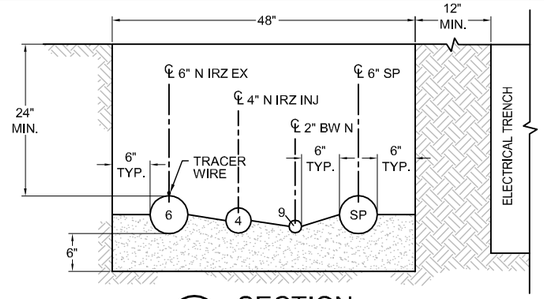

C2 SECTION
1"=1'-0"
C-07-23,-24

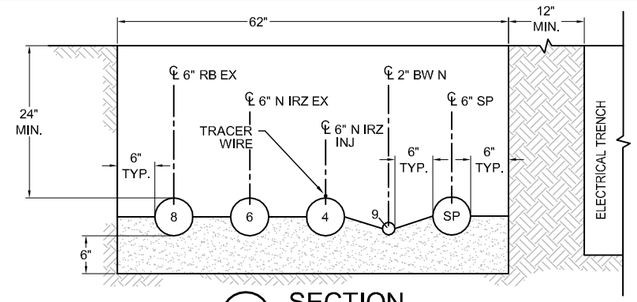

C3 SECTION
1"=1'-0"
C-07-24,-25

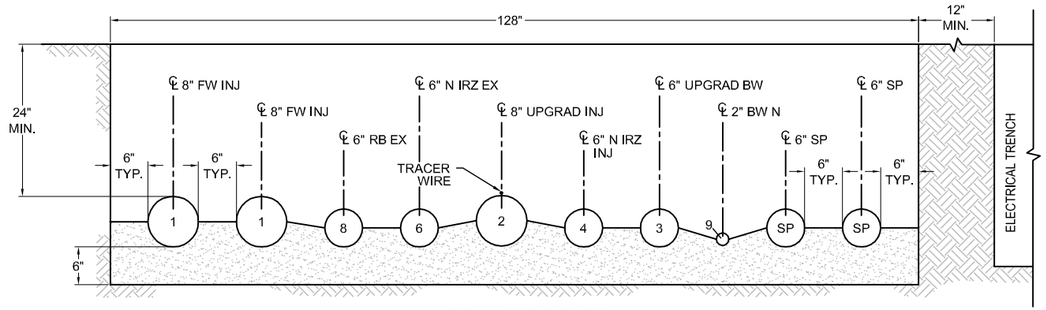

C4 SECTION
1"=1'-0"
C-07-25

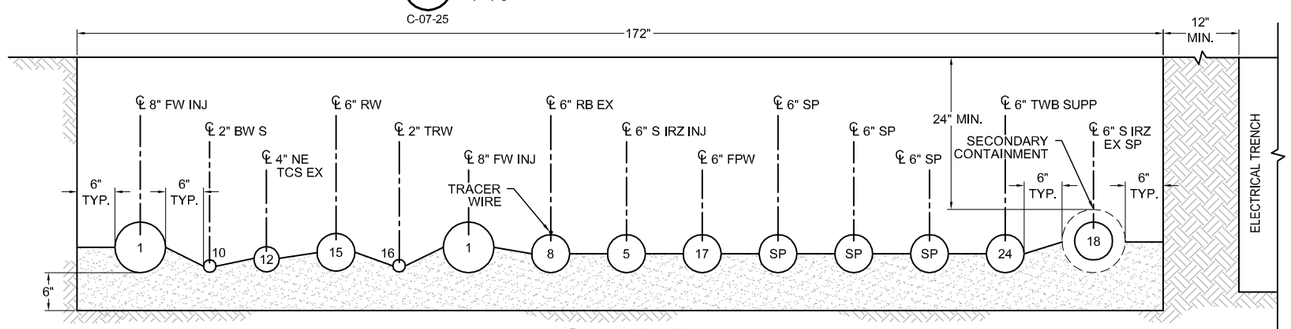

C5 SECTION
1"=1'-0"
C-07-27

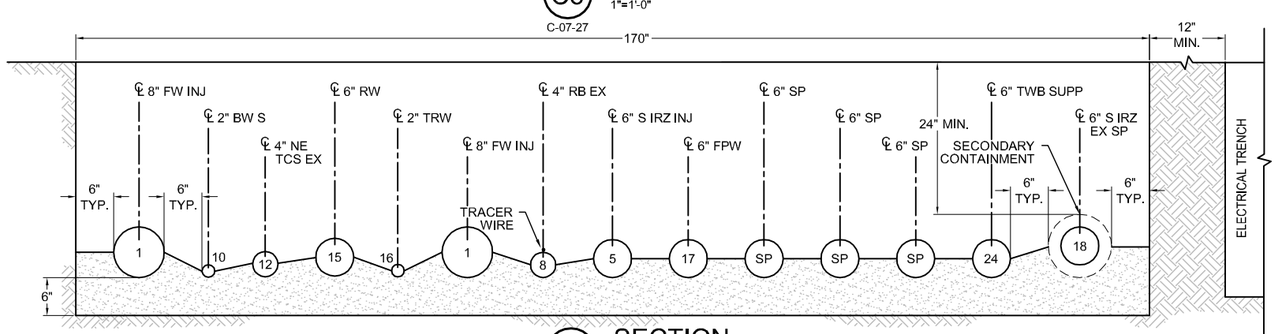

C6 SECTION
1"=1'-0"
C-07-27,-28

PIPE ID	SERVICE
1	FRESH WATER INJECTION LOOP
2	UPGRADIENT INJECTION
3	UPGRADIENT BACKWASH
4	NORTH IRZ INJECTION (1-22)
5	SOUTH IRZ INJECTION (24-40)
6	NORTHERN IRZ EXTRACTION
7	IRZ-23 EXTRACTION
8	RIVERBANK EXTRACTION
9	BACKWASH NORTH
10	BACKWASH SOUTH
11	EAST RAVINE EXTRACTION WELL NETWORK HEADER
12	NORTHEAST OF TCS EXTRACTION WELL NETWORK HEADER
13	TCS INJECTION
14	TCS BACKWASH
15	REMEDY WASTEWATER
16	TREATED WATER
17	FIRE PROTECTION WATER
18	SOUTH IRZ EXTRACTION SPARE
19	EAST RAVINE ER-6 EXTRACTION
20	POWER CONDUIT
21	COMMUNICATIONS CONDUIT
22	12kV POWER
24	TWB SUPPLEMENTAL FLOW
CA	CARBON AMENDED WATER
SP	SPARE PIPE

NOTES:

1. SAND SHALL BE USED FROM THE BASE OF THE TRENCH TO 6 INCHES ABOVE THE TOP OF PIPES. SOILS FROM THE TRENCH EXCAVATION SHALL BE MOISTURE CONDITIONED AND USED AS BACKFILL. COMPACT TO 95% RELATIVE COMPACTION TO 12 INCHES BELOW GRADE. FOUR INCHES OF AS-CLASS 2 MATERIAL SHALL BE PLACED ON TOP OF THE COMPACTED SOIL FOLLOWED BY 4 INCHES OF AB-CLASS 2. THE ROADBASE SHALL BE TOPPED WITH A 2-INCH BASE COURSE LAYER AND CAPPED WITH A 2-INCH HMA PG 70-10 SURFACE COURSE.
2. PIPE SUPPORTS AND CLEANOUTS NOT SHOWN FOR CLARITY.
3. ALL COVERS SHALL BE TRAFFIC RATED.
4. CASING SPACERS NOT SHOWN FOR CLARITY.
5. PIPE BEDDING SHALL EXTEND HALF WAY UP THE PIPES PER THE SPECIFICATIONS.

- DRAFT -
NOT FOR CONSTRUCTION

ETIC ENGINEERING

ARCADIS

NO.	DATE	DESCRIPTION	GM/SPEC	DWN	CHKD	SUPV	APVD BY
0	04/05/13	INTERMEDIATE (60%) DESIGN SUBMITTAL		AJW	KLD	JPB	JEF

REVISIONS

APPROVED BY: JEF

SO
SUPV JPB
DSGN KLD
DWN AJW
CHKD JPB
OK JEF
DATE 04/05/13
SCALES 1" = 1'-0"

TOPOCK GROUNDWATER REMEDIATION PROJECT

TRENCH SECTIONS

GAS TRANSMISSION & DISTRIBUTION
PACIFIC GAS AND ELECTRIC COMPANY
SAN FRANCISCO, CALIFORNIA

MICROFILM
BILL OF MATL
DWG LIST
SUPSDS
SUPSD BY
SHEET NO. of SHEETS
C-07-73
REV

04/05/2013, 08:59, G:\Graphics\ARTOPOCK\01\Submittal\60%_March2013\HILL Formatted\C-07-73 to 87_PipeTrenchDetails.dwg, Tab: C-07-73

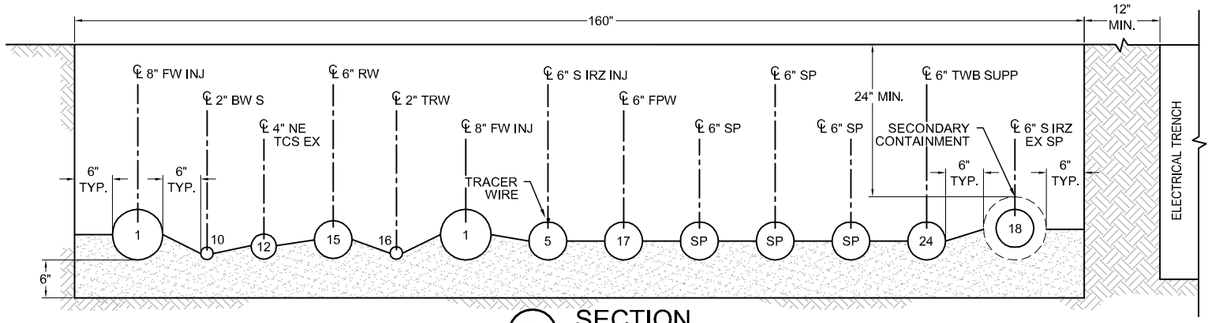

C7 SECTION
1"=1'-0"
C-07-28

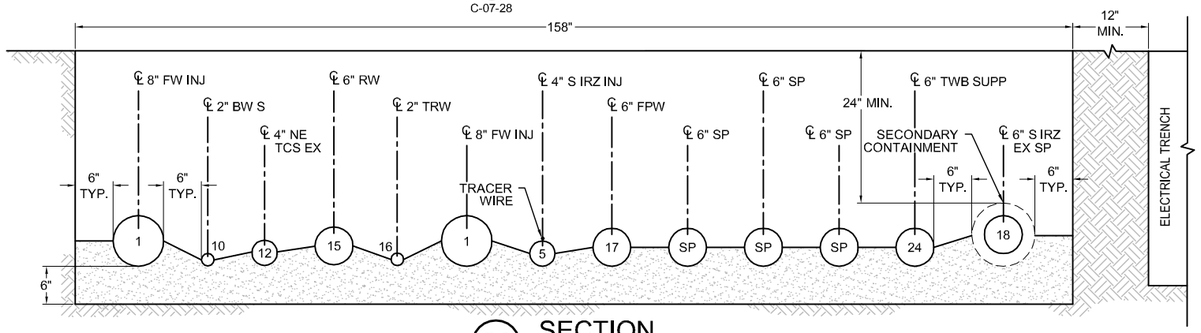

C8 SECTION
1"=1'-0"
C-07-28,-29,-30

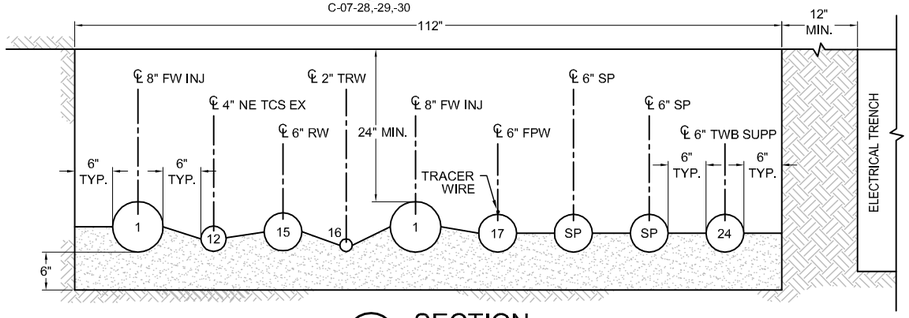

C10 SECTION
1"=1'-0"
C-07-31

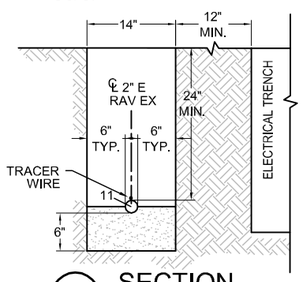

C11 SECTION
1"=1'-0"
C-07-31,-32

NOTES:

1. SAND SHALL BE USED FROM THE BASE OF THE TRENCH TO 6 INCHES ABOVE THE TOP OF PIPES. SOILS FROM THE TRENCH EXCAVATION SHALL BE MOISTURE CONDITIONED AND USED AS BACKFILL. COMPACT TO 95% RELATIVE COMPACTION TO 12 INCHES BELOW GRADE. FOUR INCHES OF AS-CLASS 2 MATERIAL SHALL BE PLACED ON TOP OF THE COMPACTED SOIL FOLLOWED BY 4 INCHES OF AB-CLASS 2. THE ROADBASE SHALL BE TOPPED WITH A 2-INCH BASE COURSE LAYER AND CAPPED WITH A 2-INCH HMA PG 70-10 SURFACE COURSE.
2. PIPE SUPPORTS AND CLEANOUTS NOT SHOWN FOR CLARITY.
3. ALL COVERS SHALL BE TRAFFIC RATED.
4. CASING SPACERS NOT SHOWN FOR CLARITY.
5. PIPE BEDDING SHALL EXTEND HALF WAY UP THE PIPES PER THE SPECIFICATIONS.

PIPE ID	SERVICE
1	FRESH WATER INJECTION LOOP
2	UPGRADIENT INJECTION
3	UPGRADIENT BACKWASH
4	NORTH IRZ INJECTION (1-22)
5	SOUTH IRZ INJECTION (24-40)
6	NORTHERN IRZ EXTRACTION
7	IRZ-23 EXTRACTION
8	RIVERBANK EXTRACTION
9	BACKWASH NORTH
10	BACKWASH SOUTH
11	EAST RAVINE EXTRACTION WELL NETWORK HEADER
12	NORTHEAST OF TCS EXTRACTION WELL NETWORK HEADER
13	TCS INJECTION
14	TCS BACKWASH
15	REMEDY WASTEWATER
16	TREATED WATER
17	FIRE PROTECTION WATER
18	SOUTH IRZ EXTRACTION SPARE
19	EAST RAVINE ER-6 EXTRACTION
20	POWER CONDUIT
21	COMMUNICATIONS CONDUIT
22	12kV POWER
24	TWB SUPPLEMENTAL FLOW
CA	CARBON AMENDED WATER
SP	SPARE PIPE

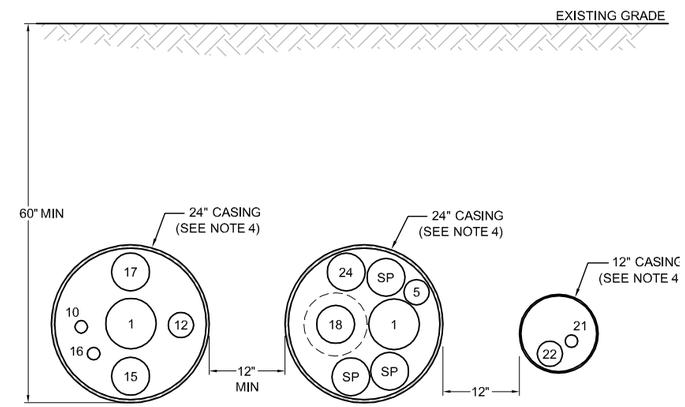

C9 SECTION
1"=1'-0"
C-07-30,-31

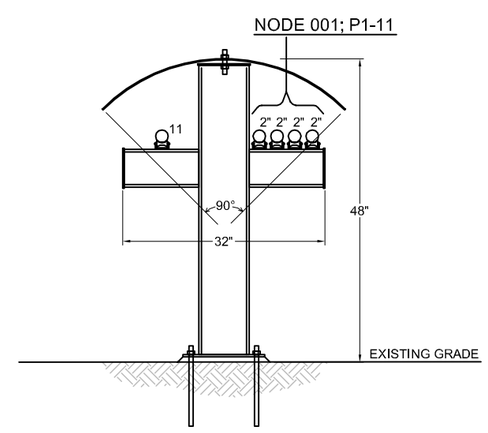

C12 SECTION
1"=1'-0"
C-07-32

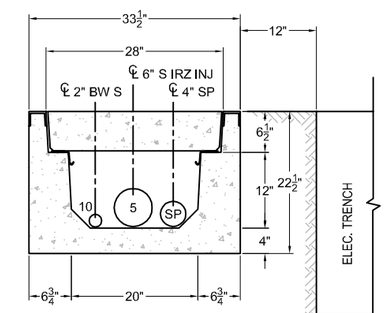

TYPICAL ROAD CROSSING
SECTION 20"W x 12"D
(BHC2012-120)

C13 SECTION
1"=1'-0"
C-07-26

- DRAFT -
NOT FOR CONSTRUCTION

ETIC ENGINEERING

ARCADIS

NO.	DATE	DESCRIPTION	GM/SPEC	DWN	CHKD	SUPV	APVD BY
0	04/05/13	INTERMEDIATE (60%) DESIGN SUBMITTAL		AJW	KLD	JPB	JEF

REVISIONS

APPROVED BY: JEF

SO	
SUPV	JPB
DSGN	KLD
DWN	AJW
CHKD	JPB
OK	JEF
DATE	04/05/13
SCALES	1" = 1'-0"

TOPOCK GROUNDWATER REMEDIATION PROJECT

TRENCH SECTIONS

GAS TRANSMISSION & DISTRIBUTION
PACIFIC GAS AND ELECTRIC COMPANY
SAN FRANCISCO, CALIFORNIA

MICROFILM
BILL OF MATL
DWG LIST
SUPSDS
SUPSD BY
SHEET NO. C-07-74 of SHEETS
REV

04/05/2013, 08:59; G:\Graphics\ART\OPOCK-01\Submittal-60%_March2013\HILL Formatted\C-07-73 to 87_PipeTrenchDetails.dwg, Tab: C-07-74

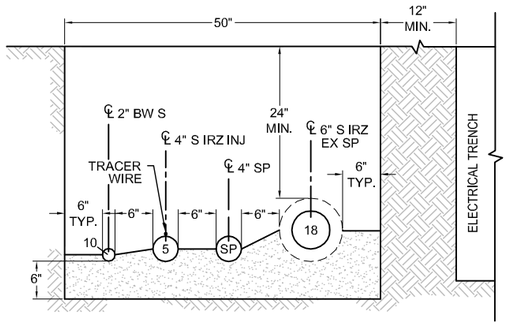

C14 C15 C16 SECTION
1"=1'-0"
C-07-33,-34,-35

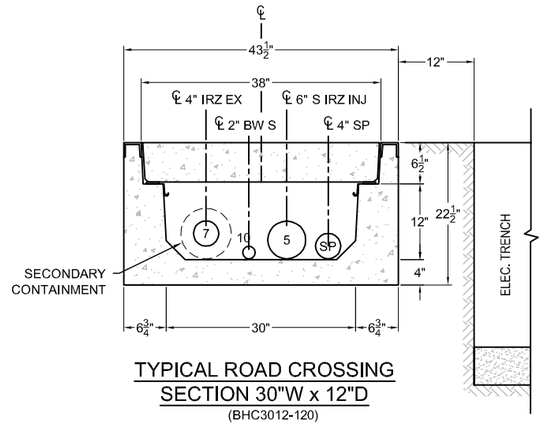

TYPICAL ROAD CROSSING
SECTION 30"W x 12"D
(BHC3012-120)

C17 SECTION
1"=1'-0"
C-07-26

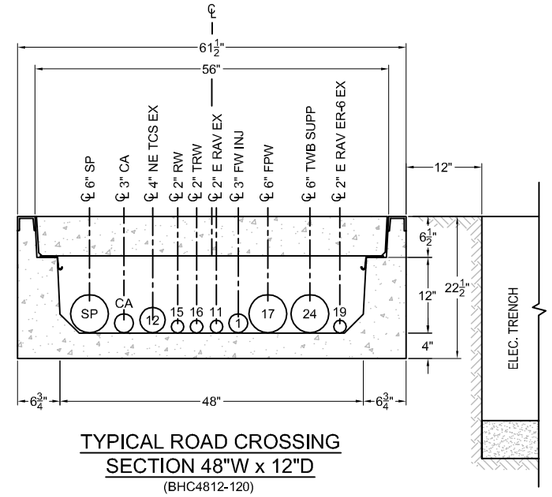

TYPICAL ROAD CROSSING
SECTION 48"W x 12"D
(BHC4812-120)

E1 SECTION
1"=1'-0"
C-07-37

NOTES:

1. SAND SHALL BE USED FROM THE BASE OF THE TRENCH TO 6 INCHES ABOVE THE TOP OF PIPES. SOILS FROM THE TRENCH EXCAVATION SHALL BE MOISTURE CONDITIONED AND USED AS BACKFILL. COMPACT TO 95% RELATIVE COMPACTION TO 12 INCHES BELOW GRADE. FOUR INCHES OF AS-CLASS 2 MATERIAL SHALL BE PLACED ON TOP OF THE COMPACTED SOIL FOLLOWED BY 4 INCHES OF AB-CLASS 2. THE ROADBASE SHALL BE TOPPED WITH A 2-INCH BASE COURSE LAYER AND CAPPED WITH A 2-INCH HMA PG 70-10 SURFACE COURSE.
2. PIPE SUPPORTS AND CLEANOUTS NOT SHOWN FOR CLARITY.
3. ALL COVERS SHALL BE TRAFFIC RATED.
4. PIPE BEDDING SHALL EXTEND HALF WAY UP THE PIPES PER THE SPECIFICATIONS.

PIPE ID	SERVICE
1	FRESH WATER INJECTION LOOP
2	UPGRADIENT INJECTION
3	UPGRADIENT BACKWASH
4	NORTH IRZ INJECTION (1-22)
5	SOUTH IRZ INJECTION (24-40)
6	NORTHERN IRZ EXTRACTION
7	IRZ-23 EXTRACTION
8	RIVERBANK EXTRACTION
9	BACKWASH NORTH
10	BACKWASH SOUTH
11	EAST RAVINE EXTRACTION WELL NETWORK HEADER
12	NORTHEAST OF TCS EXTRACTION WELL NETWORK HEADER
13	TCS INJECTION
14	TCS BACKWASH
15	REMEDY WASTEWATER
16	TREATED WATER
17	FIRE PROTECTION WATER
18	SOUTH IRZ EXTRACTION SPARE
19	EAST RAVINE ER-6 EXTRACTION
20	POWER CONDUIT
21	COMMUNICATIONS CONDUIT
22	12kV POWER
24	TWB SUPPLEMENTAL FLOW
CA	CARBON AMENDED WATER
SP	SPARE PIPE

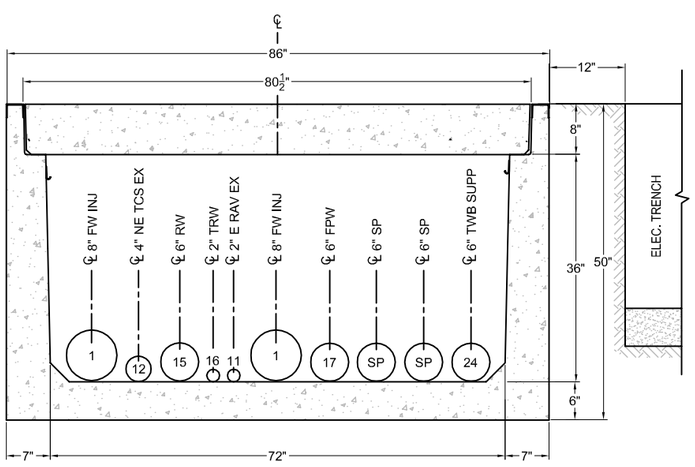

TYPICAL ROAD CROSSING
SECTION 72"W x 36"D
(BHC7236-120)

F1 SECTION
1"=1'-0"
C-07-36

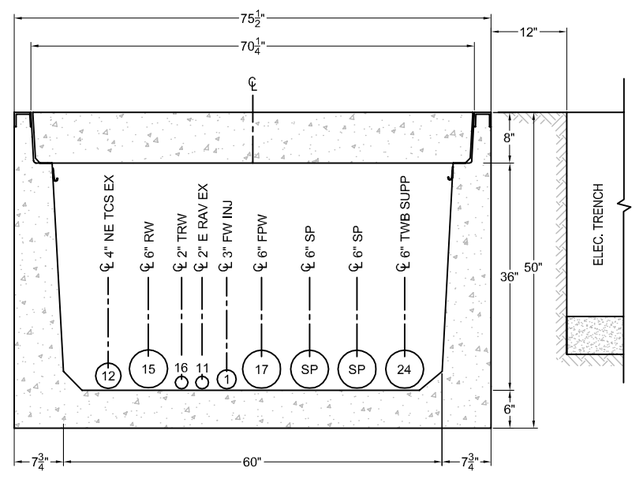

TYPICAL ROAD CROSSING
SECTION 60"W x 36"D
(BHC6036-120)

F2 SECTION
1"=1'-0"
C-07-36

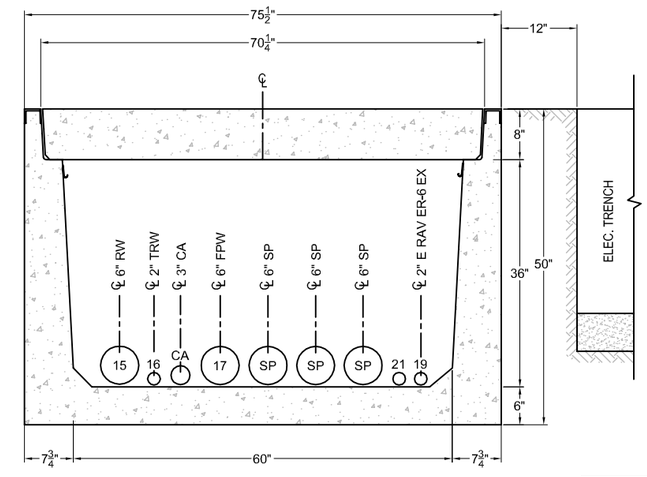

TYPICAL ROAD CROSSING
SECTION 60"W x 36"D
(BHC6036-120)

F3 SECTION
1"=1'-0"
C-07-36,-37

- DRAFT -
NOT FOR CONSTRUCTION

ETIC ENGINEERING

ARCADIS

NO.	DATE	DESCRIPTION	GM/SPEC	DWN	CHKD	SUPV	APVD BY
0	04/05/13	INTERMEDIATE (60%) DESIGN SUBMITTAL		AJW	KLD	JPB	JEF

REVISIONS

APPROVED BY		
JEF	SO	
	SUPV	JPB
	DSGN	KLD
	DWN	AJW
	CHKD	JPB
	OK	JEF
	DATE	04/05/13
	SCALES	1" = 1'-0"

TOPOCK GROUNDWATER REMEDIATION PROJECT

TRENCH SECTIONS

GAS TRANSMISSION & DISTRIBUTION
PACIFIC GAS AND ELECTRIC COMPANY
SAN FRANCISCO, CALIFORNIA

MICROFILM	
BILL OF MATL	
DWG LIST	
SUPSDS	
SUPSD BY	
SHEET NO. of SHEETS	
C-07-75	REV

04/05/2013, 09:00, G:\Graphics\ART\TOPOCK\11\Submittal-60%_March\2013\HILL Formatted\C-07-73 to 87_PipeTrenchDetails.dwg, Tab: C-07-75

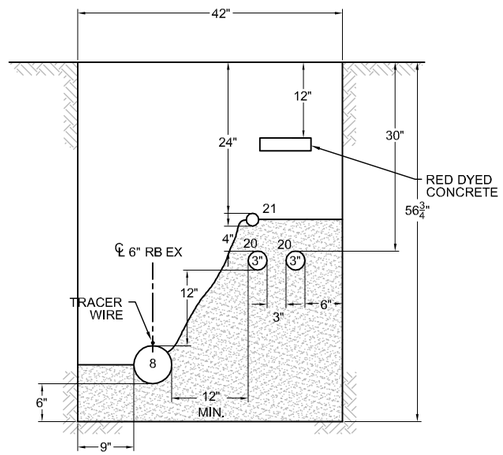

G1 G4 SECTION
1"=1'-0"
C-07-38,-40,-41

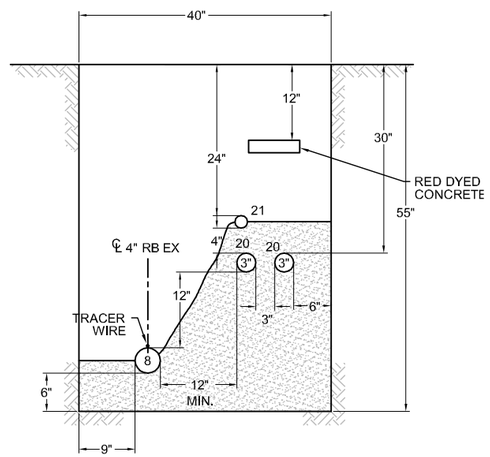

G2 G6 SECTION
1"=1'-0"
C-07-38,-42

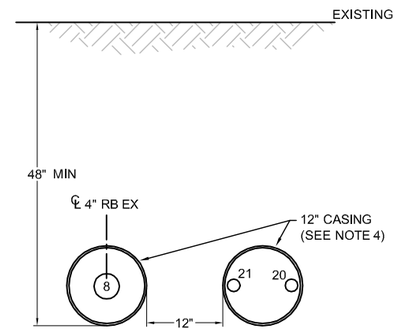

G3 SECTION
1"=1'-0"
C-07-39,-41

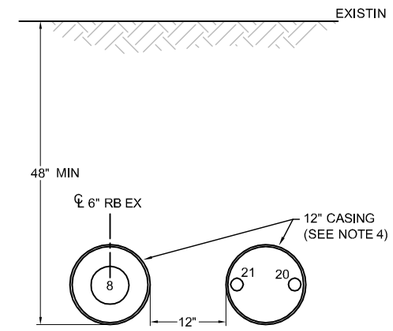

G5 SECTION
1"=1'-0"
C-07-40

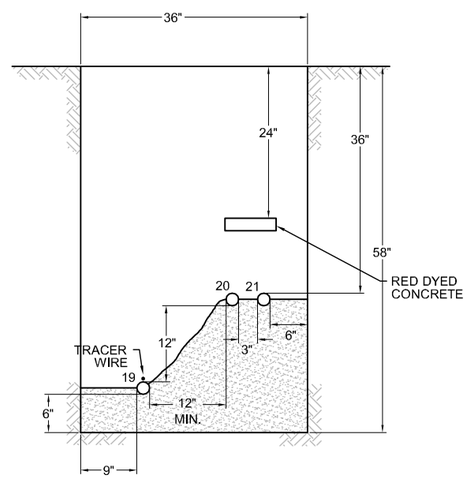

C18 SECTION
1"=1'-0"
C-07-43

PIPE ID	SERVICE
1	FRESH WATER INJECTION LOOP
2	UPGRADIENT INJECTION
3	UPGRADIENT BACKWASH
4	NORTH IRZ INJECTION (1-22)
5	SOUTH IRZ INJECTION (24-40)
6	NORTHERN IRZ EXTRACTION
7	IRZ-23 EXTRACTION
8	RIVERBANK EXTRACTION
9	BACKWASH NORTH
10	BACKWASH SOUTH
11	EAST RAVINE EXTRACTION WELL NETWORK HEADER
12	NORTHEAST OF TCS EXTRACTION WELL NETWORK HEADER
13	TCS INJECTION
14	TCS BACKWASH
15	REMEDY WASTEWATER
16	TREATED WATER
17	FIRE PROTECTION WATER
18	SOUTH IRZ EXTRACTION SPARE
19	EAST RAVINE ER-6 EXTRACTION
20	POWER CONDUIT
21	COMMUNICATIONS CONDUIT
22	12kV POWER
24	TWB SUPPLEMENTAL FLOW
CA	CARBON AMENDED WATER
SP	SPARE PIPE

NOTES:

1. SAND SHALL BE USED FROM THE BASE OF THE TRENCH TO 6 INCHES ABOVE THE TOP OF PIPES. SOILS FROM THE TRENCH EXCAVATION SHALL BE MOISTURE CONDITIONED AND USED AS BACKFILL. COMPACT TO 95% RELATIVE COMPACTION TO 12 INCHES BELOW GRADE. FOUR INCHES OF AS-CLASS 2 MATERIAL SHALL BE PLACED ON TOP OF THE COMPACTED SOIL FOLLOWED BY 4 INCHES OF AB-CLASS 2. THE ROADBASE SHALL BE TOPPED WITH A 2-INCH BASE COURSE LAYER AND CAPPED WITH A 2-INCH HMA PG 70-10 SURFACE COURSE.
2. PIPE SUPPORTS AND CLEANOUTS NOT SHOWN FOR CLARITY.
3. ALL COVERS SHALL BE TRAFFIC RATED.
4. CASING SPACERS NOT SHOWN FOR CLARITY.
5. PIPE BEDDING SHALL EXTEND HALF WAY UP THE PIPES PER THE SPECIFICATIONS.

- DRAFT -
NOT FOR CONSTRUCTION

ETIC ENGINEERING

ARCADIS

NO.	DATE	DESCRIPTION	GM/SPEC	DWN	CHKD	SUPV	APVD BY
0	04/05/13	INTERMEDIATE (60%) DESIGN SUBMITTAL		AJW	KLD	JPB	JEF

REVISIONS

APPROVED BY: JEF

SO
SUPV JPB
DSGN KLD
DWN AJW
CHKD JPB
OK JEF
DATE 04/05/13
SCALES 1" = 1'-0"

TOPOCK GROUNDWATER REMEDIATION PROJECT

TRENCH SECTIONS

GAS TRANSMISSION & DISTRIBUTION
PACIFIC GAS AND ELECTRIC COMPANY
SAN FRANCISCO, CALIFORNIA

MICROFILM
BILL OF MATL
DWG LIST
SUPSDS
SUPSD BY
SHEET NO. of SHEETS
C-07-76
REV

04/05/2013, 09:00, G:\Graphics\ART\TOPOCK-01\Submittal-60%_March2013\HILL Formatted\C-07-73 to 87_PipeTrench\Details.dwg, Tab: C-07-76

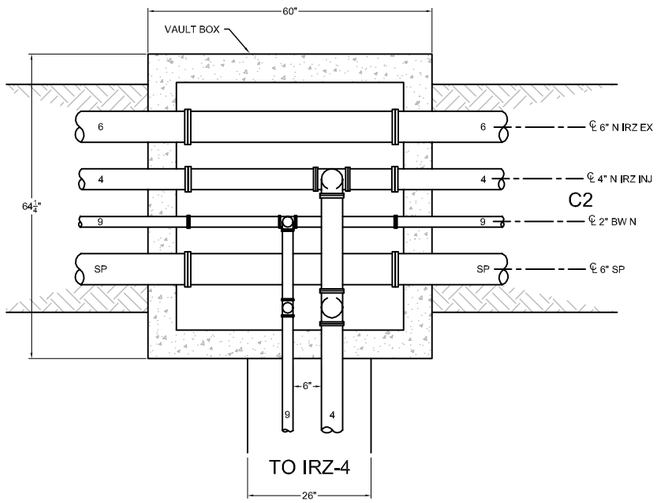

1 DETAIL
3/4"=1'-0"
C-07-23

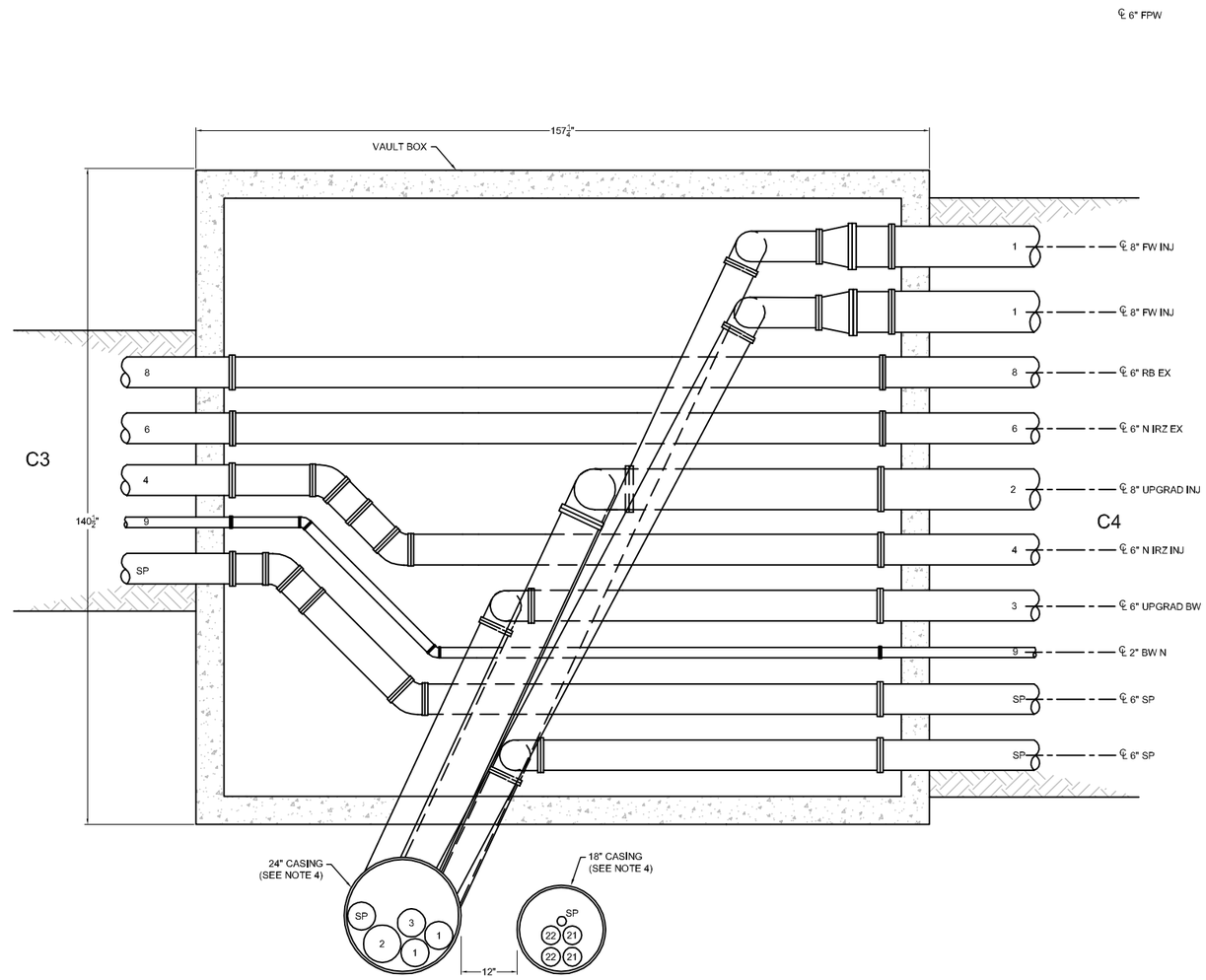

3 DETAIL
3/4"=1'-0"
C-07-25

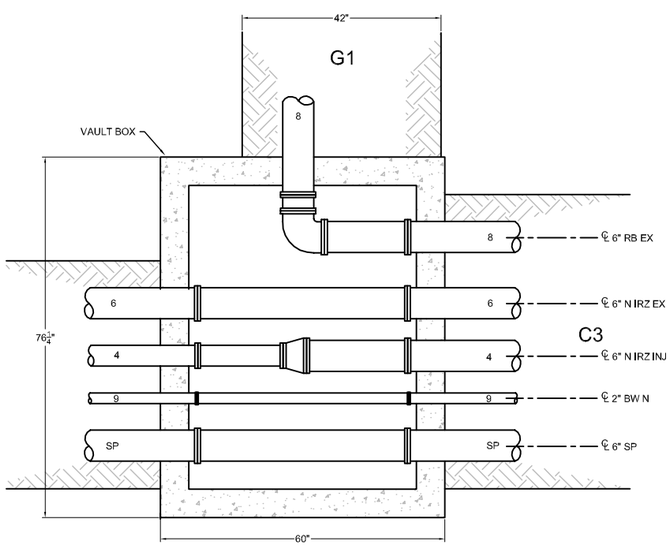

2 DETAIL
3/4"=1'-0"
C-07-24

PIPE ID	SERVICE
1	FRESH WATER INJECTION LOOP
2	UPGRADIENT INJECTION
3	UPGRADIENT BACKWASH
4	NORTH IRZ INJECTION (1-22)
5	SOUTH IRZ INJECTION (24-40)
6	NORTHERN IRZ EXTRACTION
7	IRZ-23 EXTRACTION
8	RIVERBANK EXTRACTION
9	BACKWASH NORTH
10	BACKWASH SOUTH
11	EAST RAVINE EXTRACTION WELL NETWORK HEADER
12	NORTHEAST OF TCS EXTRACTION WELL NETWORK HEADER
13	TCS INJECTION
14	TCS BACKWASH
15	REMEDY WASTEWATER
16	TREATED WATER
17	FIRE PROTECTION WATER
18	SOUTH IRZ EXTRACTION SPARE
19	EAST RAVINE ER-6 EXTRACTION
20	POWER CONDUIT
21	COMMUNICATIONS CONDUIT
22	12kV POWER
24	TWB SUPPLEMENTAL FLOW
CA	CARBON AMENDED WATER
SP	SPARE PIPE

NOTES:

1. SAND SHALL BE USED FROM THE BASE OF THE TRENCH TO 6 INCHES ABOVE THE TOP OF PIPES. SOILS FROM THE TRENCH EXCAVATION SHALL BE MOISTURE CONDITIONED AND USED AS BACKFILL. COMPACT TO 95% RELATIVE COMPACTION TO 12 INCHES BELOW GRADE. FOUR INCHES OF AS-CLASS 2 MATERIAL SHALL BE PLACED ON TOP OF THE COMPACTED SOIL FOLLOWED BY 4 INCHES OF AB-CLASS 2. THE ROADBASE SHALL BE TOPPED WITH A 2-INCH BASE COURSE LAYER AND CAPPED WITH A 2-INCH HMA PG 70-10 SURFACE COURSE.
2. PIPE SUPPORTS AND CLEANOUTS NOT SHOWN FOR CLARITY.
3. ALL COVERS SHALL BE TRAFFIC RATED.
4. CASING SPACERS NOT SHOWN FOR CLARITY.

- DRAFT -
NOT FOR CONSTRUCTION

ETIC ENGINEERING

ARCADIS

NO.	DATE	DESCRIPTION	GM/SPEC	DWN	CHKD	SUPV	APVD BY
0	04/05/13	INTERMEDIATE (60%) DESIGN SUBMITTAL	AJW	KLD	JPB	JEF	

REVISIONS

APPROVED BY: JEF

SO	
SUPV	JPB
DSGN	KLD
DWN	AJW
CHKD	JPB
OK	JEF
DATE	04/05/13
SCALES	1" = 1'-0"

TOPOCK GROUNDWATER REMEDIATION PROJECT

INTERSECTION DETAILS

GAS TRANSMISSION & DISTRIBUTION
PACIFIC GAS AND ELECTRIC COMPANY
SAN FRANCISCO, CALIFORNIA

MICROFILM
BILL OF MATL
DWG LIST
SUPSDS
SUPSD BY
SHEET NO. C-07-77 of SHEETS
REV

04/05/2013, 09:00, G:\Graphics\ARTOPOCK-01\Submittal-60%_March2013\HILL Formatted\C-07-73 to 87_PipeTrenchDetails.dwg, Tab: C-07-77

N180B

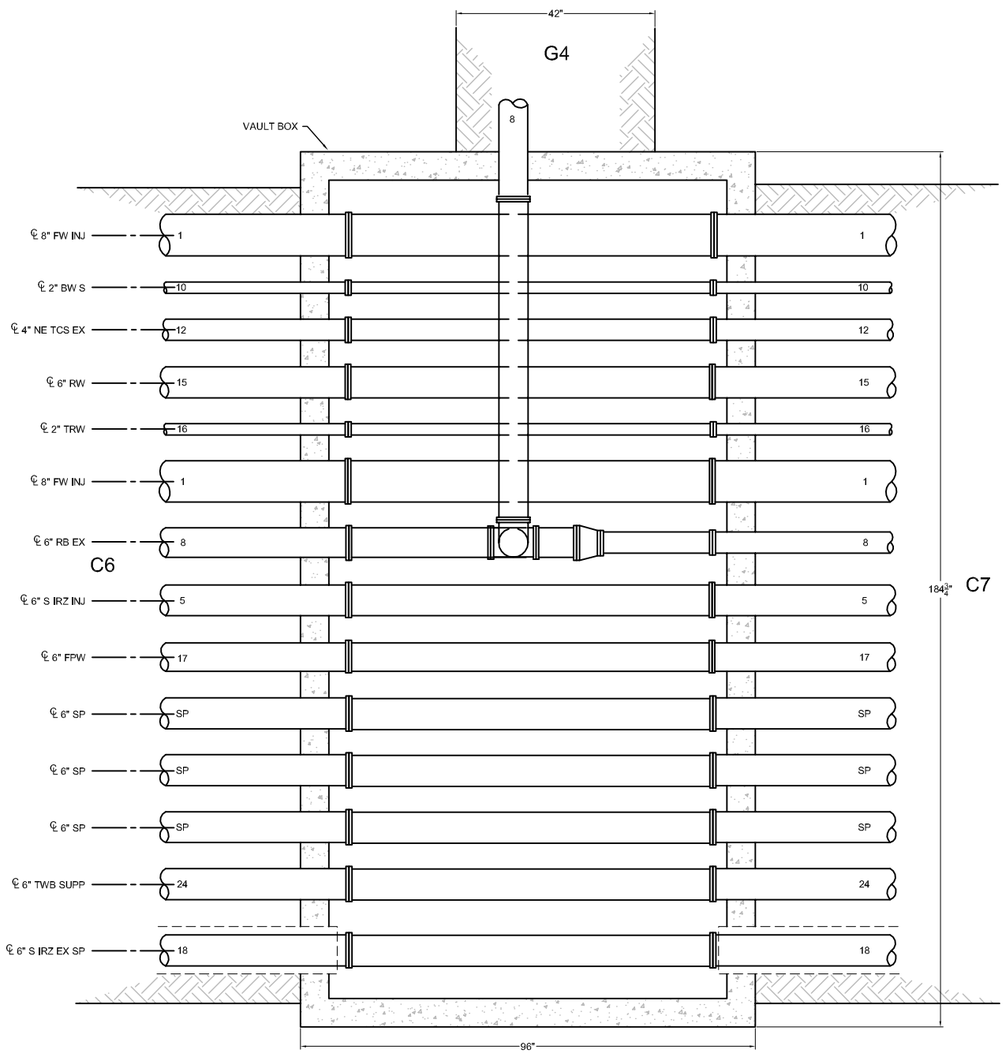

4 DETAIL
3/4"=1'-0"
C-07-27

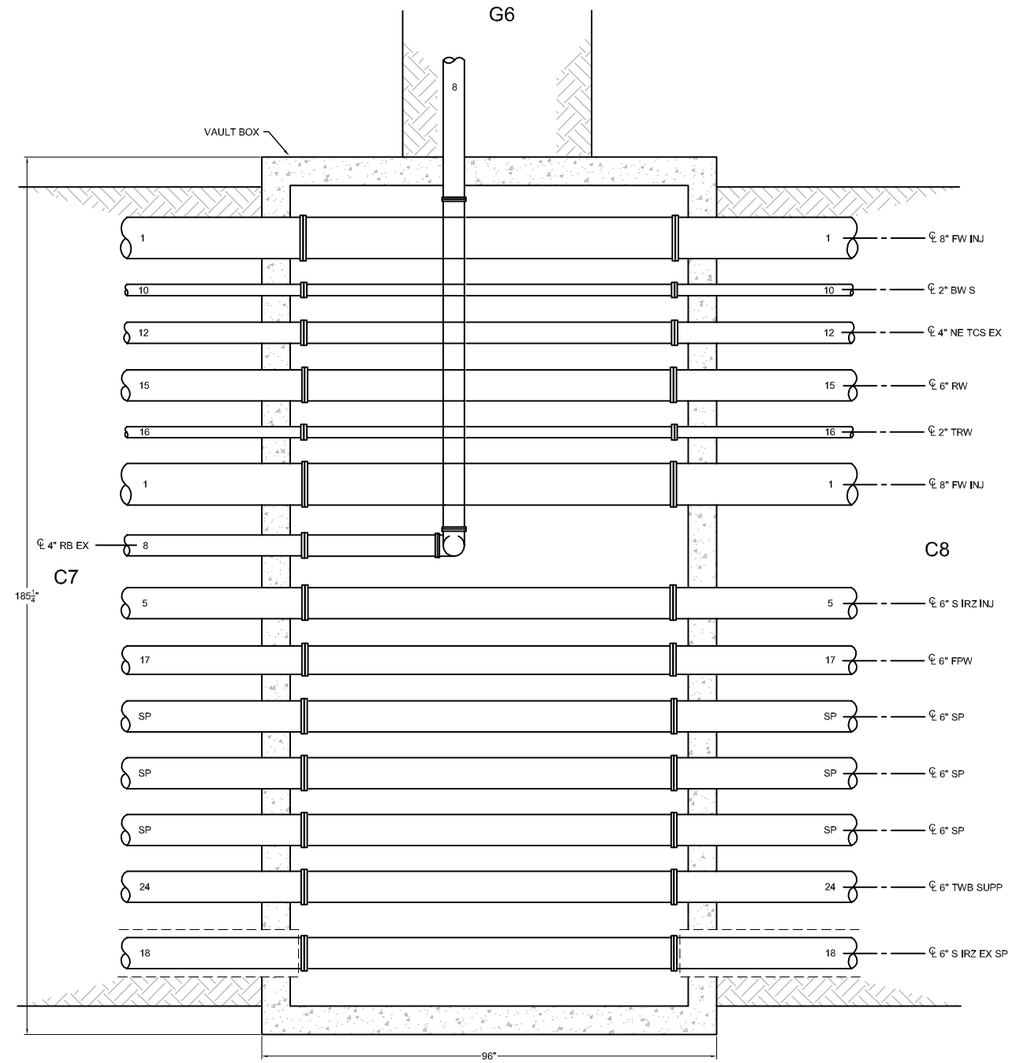

5 DETAIL
3/4"=1'-0"
C-07-28

PIPE ID	SERVICE
1	FRESH WATER INJECTION LOOP
2	UPGRADIENT INJECTION
3	UPGRADIENT BACKWASH
4	NORTH IRZ INJECTION (1-22)
5	SOUTH IRZ INJECTION (24-40)
6	NORTHERN IRZ EXTRACTION
7	IRZ-23 EXTRACTION
8	RIVERBANK EXTRACTION
9	BACKWASH NORTH
10	BACKWASH SOUTH
11	EAST RAVINE EXTRACTION WELL NETWORK HEADER
12	NORTHEAST OF TCS EXTRACTION WELL NETWORK HEADER
13	TCS INJECTION
14	TCS BACKWASH
15	REMEDY WASTEWATER
16	TREATED WATER
17	FIRE PROTECTION WATER
18	SOUTH IRZ EXTRACTION SPARE
19	EAST RAVINE ER-6 EXTRACTION
20	POWER CONDUIT
21	COMMUNICATIONS CONDUIT
22	12kV POWER
24	TWB SUPPLEMENTAL FLOW
CA	CARBON AMENDED WATER
SP	SPARE PIPE

NOTES:

1. SAND SHALL BE USED FROM THE BASE OF THE TRENCH TO 6 INCHES ABOVE THE TOP OF PIPES. SOILS FROM THE TRENCH EXCAVATION SHALL BE MOISTURE CONDITIONED AND USED AS BACKFILL. COMPACT TO 95% RELATIVE COMPACTION TO 12 INCHES BELOW GRADE. FOUR INCHES OF AS-CLASS 2 MATERIAL SHALL BE PLACED ON TOP OF THE COMPACTED SOIL FOLLOWED BY 4 INCHES OF AB-CLASS 2. THE ROADBASE SHALL BE TOPPED WITH A 2-INCH BASE COURSE LAYER AND CAPPED WITH A 2-INCH HMA PG 70-10 SURFACE COURSE.
2. PIPE SUPPORTS AND CLEANOUTS NOT SHOWN FOR CLARITY.
3. ALL COVERS SHALL BE TRAFFIC RATED.

- DRAFT -
NOT FOR
CONSTRUCTION

ETIC ENGINEERING

ARCADIS

NO.	DATE	DESCRIPTION	GM/SPEC	DWN	CHKD	SUPV	APVD BY
0	04/05/13	INTERMEDIATE (60%) DESIGN SUBMITTAL		AJW	KLD	JPB	JEF

REVISIONS

APPROVED BY: JEF

SO	
SUPV	JPB
DSGN	KLD
DWN	AJW
CHKD	JPB
OK	JEF
DATE	04/05/13
SCALES	1" = 1'-0"

TOPOCK GROUNDWATER REMEDIATION PROJECT

INTERSECTION DETAILS

GAS TRANSMISSION & DISTRIBUTION
PACIFIC GAS AND ELECTRIC COMPANY
SAN FRANCISCO, CALIFORNIA

MICROFILM
BILL OF MATL
DWG LIST
SUPSDS
SUPSD BY
SHEET NO. of SHEETS
C-07-78
REV

04/05/2013, 09:00, G:\Graphics\ARI\TOPOCK\-01\Submittals\60%_March2013\HILL Firmatted\C-07-73 to 87_PipeTrenchDetails.dwg, Tab: C-07-78

N1808

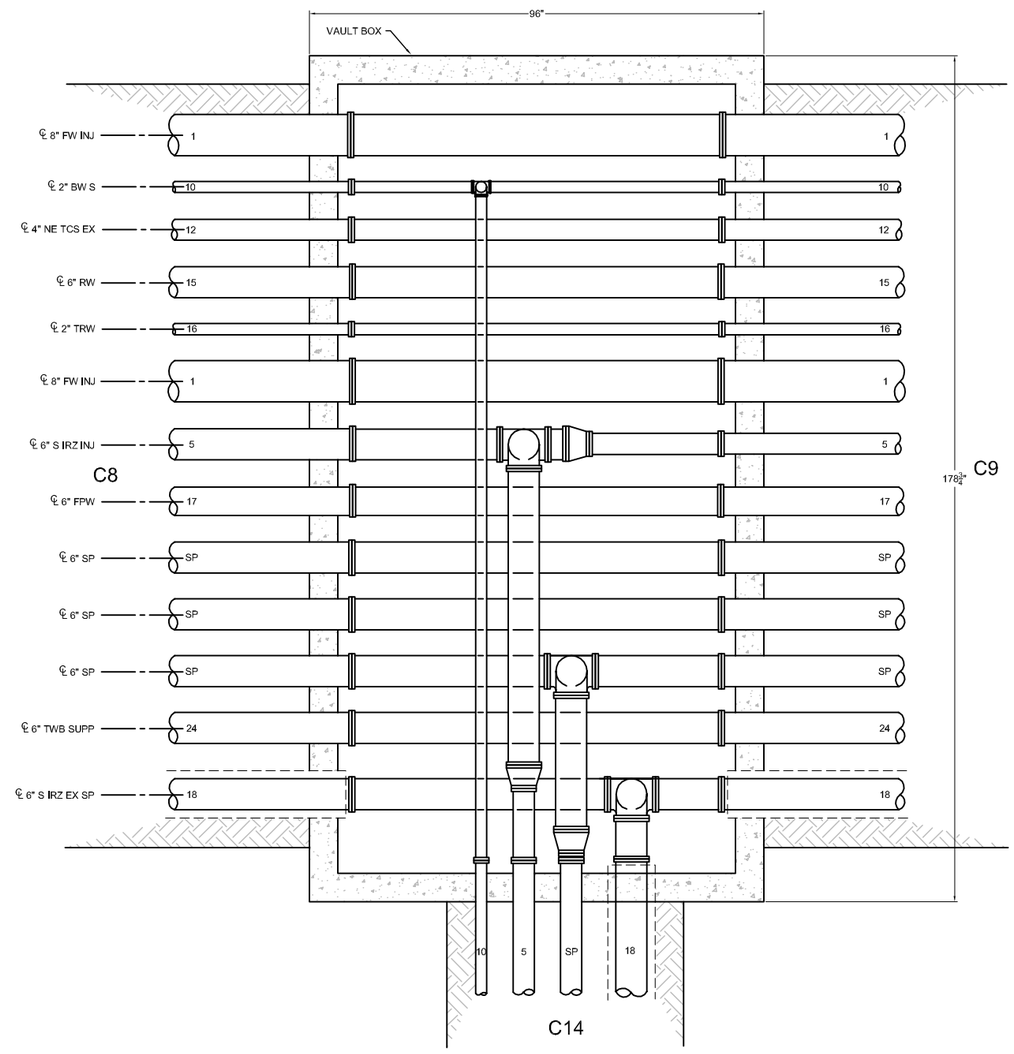

6 DETAIL
3/4"=1'-0"
C-07-28

PIPE ID	SERVICE
1	FRESH WATER INJECTION LOOP
2	UPGRADIENT INJECTION
3	UPGRADIENT BACKWASH
4	NORTH IRZ INJECTION (1-22)
5	SOUTH IRZ INJECTION (24-40)
6	NORTHERN IRZ EXTRACTION
7	IRZ-23 EXTRACTION
8	RIVERBANK EXTRACTION
9	BACKWASH NORTH
10	BACKWASH SOUTH
11	EAST RAVINE EXTRACTION WELL NETWORK HEADER
12	NORTHEAST OF TCS EXTRACTION WELL NETWORK HEADER
13	TCS INJECTION
14	TCS BACKWASH
15	REMEDY WASTEWATER
16	TREATED WATER
17	FIRE PROTECTION WATER
18	SOUTH IRZ EXTRACTION SPARE
19	EAST RAVINE ER-6 EXTRACTION
20	POWER CONDUIT
21	COMMUNICATIONS CONDUIT
22	12kV POWER
24	TWB SUPPLEMENTAL FLOW
CA	CARBON AMENDED WATER
SP	SPARE PIPE

NOTES:

1. SAND SHALL BE USED FROM THE BASE OF THE TRENCH TO 6 INCHES ABOVE THE TOP OF PIPES. SOILS FROM THE TRENCH EXCAVATION SHALL BE MOISTURE CONDITIONED AND USED AS BACKFILL. COMPACT TO 95% RELATIVE COMPACTION TO 12 INCHES BELOW GRADE. FOUR INCHES OF AS-CLASS 2 MATERIAL SHALL BE PLACED ON TOP OF THE COMPACTED SOIL FOLLOWED BY 4 INCHES OF AB-CLASS 2. THE ROADBASE SHALL BE TOPPED WITH A 2-INCH BASE COURSE LAYER AND CAPPED WITH A 2-INCH HMA PG 70-10 SURFACE COURSE.
2. PIPE SUPPORTS AND CLEANOUTS NOT SHOWN FOR CLARITY.
3. ALL COVERS SHALL BE TRAFFIC RATED.

- DRAFT -
NOT FOR
CONSTRUCTION

ETIC ENGINEERING

ARCADIS

NO.	DATE	DESCRIPTION	GM/SPEC	DWN	CHKD	SUPV	APVD BY
0	04/05/13	INTERMEDIATE (60%) DESIGN SUBMITTAL		AJW	KLD	JPB	JEF

REVISIONS

APPROVED BY: JEF

SO	
SUPV	JPB
DSGN	KLD
DWN	AJW
CHKD	JPB
OK	JEF
DATE	04/05/13
SCALES	1" = 1'-0"

TOPOCK GROUNDWATER REMEDIATION PROJECT

INTERSECTION DETAILS

GAS TRANSMISSION & DISTRIBUTION
PACIFIC GAS AND ELECTRIC COMPANY
SAN FRANCISCO, CALIFORNIA

MICROFILM
BILL OF MATL
DWG LIST
SUPSDS
SUPSD BY
SHEET NO. of SHEETS
C-07-79
REV

04/05/2013, 09:00, G:\Graphics\ART\TOPOCK\41\Submittal-60%_March2013\HILL Formatted\C-07-73 to 87_PipeTrenchDetails.dwg, Tab: C-07-79

N1808

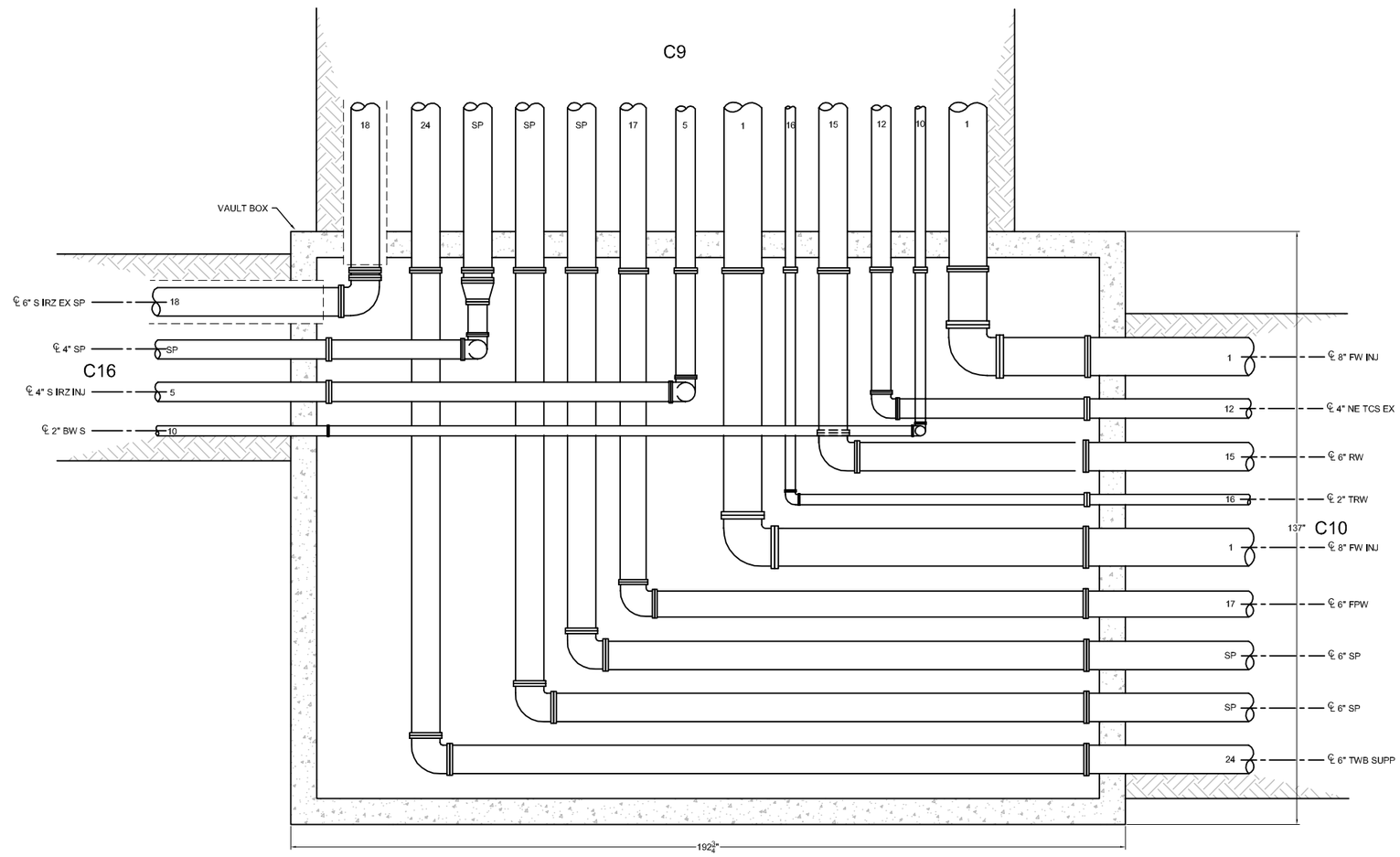

7 DETAIL
3/4"=1'-0"
C-07-30
C-07-31
C-07-35

PIPE ID	SERVICE
1	FRESH WATER INJECTION LOOP
2	UPGRADIENT INJECTION
3	UPGRADIENT BACKWASH
4	NORTH IRZ INJECTION (1-22)
5	SOUTH IRZ INJECTION (24-40)
6	NORTHERN IRZ EXTRACTION
7	IRZ-23 EXTRACTION
8	RIVERBANK EXTRACTION
9	BACKWASH NORTH
10	BACKWASH SOUTH
11	EAST RAVINE EXTRACTION WELL NETWORK HEADER
12	NORTHEAST OF TCS EXTRACTION WELL NETWORK HEADER
13	TCS INJECTION
14	TCS BACKWASH
15	REMEDY WASTEWATER
16	TREATED WATER
17	FIRE PROTECTION WATER
18	SOUTH IRZ EXTRACTION SPARE
19	EAST RAVINE ER-6 EXTRACTION
20	POWER CONDUIT
21	COMMUNICATIONS CONDUIT
22	12kV POWER
24	TWB SUPPLEMENTAL FLOW
CA	CARBON AMENDED WATER
SP	SPARE PIPE

NOTES:

1. SAND SHALL BE USED FROM THE BASE OF THE TRENCH TO 6 INCHES ABOVE THE TOP OF PIPES. SOILS FROM THE TRENCH EXCAVATION SHALL BE MOISTURE CONDITIONED AND USED AS BACKFILL. COMPACT TO 95% RELATIVE COMPACTION TO 12 INCHES BELOW GRADE. FOUR INCHES OF AS-CLASS 2 MATERIAL SHALL BE PLACED ON TOP OF THE COMPACTED SOIL FOLLOWED BY 4 INCHES OF AB-CLASS 2. THE ROADBASE SHALL BE TOPPED WITH A 2-INCH BASE COURSE LAYER AND CAPPED WITH A 2-INCH HMA PG 70-10 SURFACE COURSE.
2. PIPE SUPPORTS AND CLEANOUTS NOT SHOWN FOR CLARITY.
3. ALL COVERS SHALL BE TRAFFIC RATED.

- DRAFT -
NOT FOR
CONSTRUCTION

ETIC ENGINEERING

ARCADIS

NO.	DATE	DESCRIPTION	GM/SPEC	DWN	CHKD	SUPV	APVD BY
0	04/05/13	INTERMEDIATE (60%) DESIGN SUBMITTAL		AJW	KLD	JPB	JEF

REVISIONS

APPROVED BY: JEF

SO	
SUPV	JPB
DSGN	KLD
DWN	AJW
CHKD	JPB
OK	JEF
DATE	04/05/13
SCALES	1" = 1'-0"

TOPOCK GROUNDWATER REMEDIATION PROJECT

INTERSECTION DETAILS

GAS TRANSMISSION & DISTRIBUTION
PACIFIC GAS AND ELECTRIC COMPANY
SAN FRANCISCO, CALIFORNIA

MICROFILM
BILL OF MATL
DWG LIST
SUPSDS
SUPSD BY
SHEET NO. of SHEETS
C-07-80
REV

04/05/2013, 09:00, G:\Graphics\ARTOPOCK-01\Submittal-60%_March2013\HILL Formatted\C-07-73 to 87_PipeTrenchDetails.dwg, Tab: C-07-80

N1808

PIPE ID	SERVICE
1	FRESH WATER INJECTION LOOP
2	UPGRADIENT INJECTION
3	UPGRADIENT BACKWASH
4	NORTH IRZ INJECTION (1-22)
5	SOUTH IRZ INJECTION (24-40)
6	NORTHERN IRZ EXTRACTION
7	IRZ-23 EXTRACTION
8	RIVERBANK EXTRACTION
9	BACKWASH NORTH
10	BACKWASH SOUTH
11	EAST RAVINE EXTRACTION WELL NETWORK HEADER
12	NORTHEAST OF TCS EXTRACTION WELL NETWORK HEADER
13	TCS INJECTION
14	TCS BACKWASH
15	REMEDY WASTEWATER
16	TREATED WATER
17	FIRE PROTECTION WATER
18	SOUTH IRZ EXTRACTION SPARE
19	EAST RAVINE ER-6 EXTRACTION
20	POWER CONDUIT
21	COMMUNICATIONS CONDUIT
22	12kV POWER
24	TWB SUPPLEMENTAL FLOW
CA	CARBON AMENDED WATER
SP	SPARE PIPE

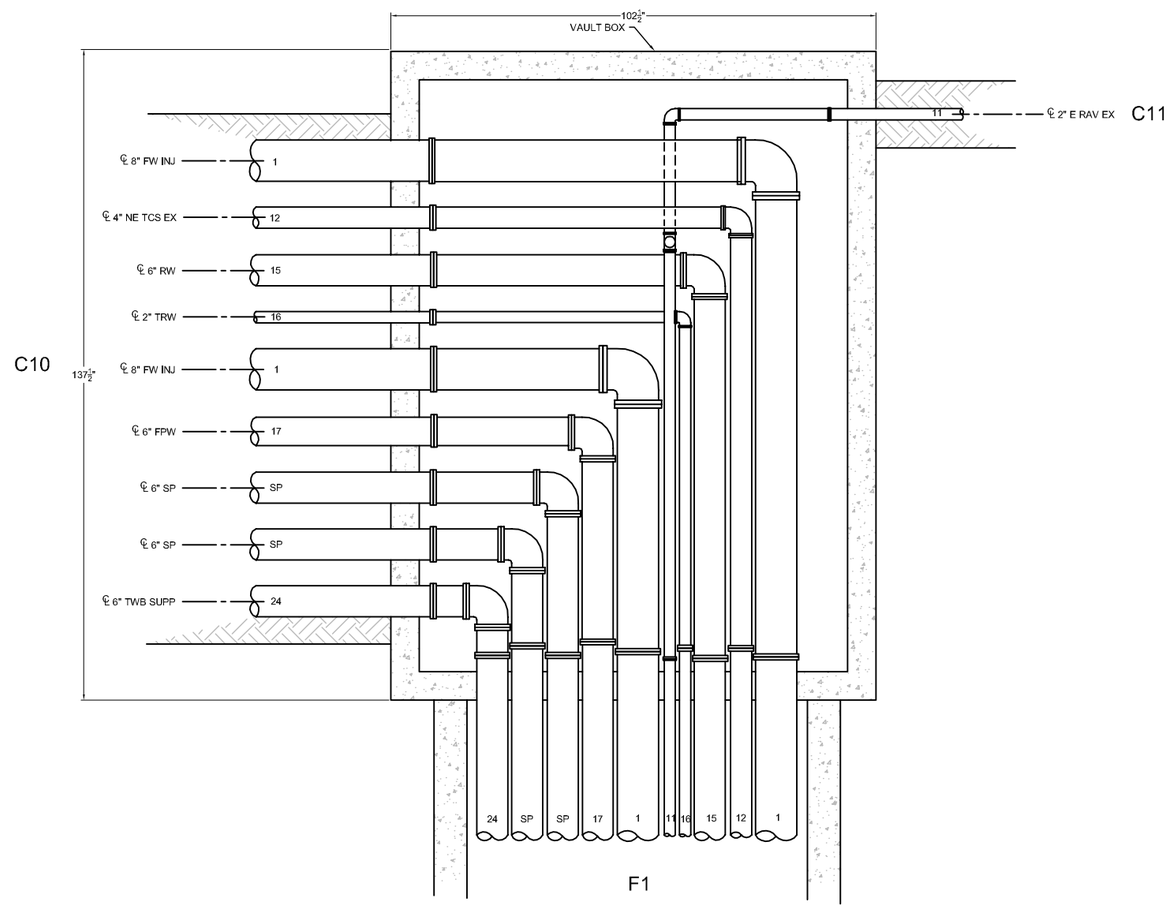

8 DETAIL
3/4"='1-0"
C-07-31
C-07-36

NOTES:

1. SAND SHALL BE USED FROM THE BASE OF THE TRENCH TO 6 INCHES ABOVE THE TOP OF PIPES. SOILS FROM THE TRENCH EXCAVATION SHALL BE MOISTURE CONDITIONED AND USED AS BACKFILL. COMPACT TO 95% RELATIVE COMPACTION TO 12 INCHES BELOW GRADE. FOUR INCHES OF AS-CLASS 2 MATERIAL SHALL BE PLACED ON TOP OF THE COMPACTED SOIL FOLLOWED BY 4 INCHES OF AB-CLASS 2. THE ROADBASE SHALL BE TOPPED WITH A 2-INCH BASE COURSE LAYER AND CAPPED WITH A 2-INCH HMA PG 70-10 SURFACE COURSE.
2. PIPE SUPPORTS AND CLEANOUTS NOT SHOWN FOR CLARITY.
3. ALL COVERS SHALL BE TRAFFIC RATED.

- DRAFT -
NOT FOR
CONSTRUCTION

ETIC ENGINEERING

ARCADIS

NO.	DATE	DESCRIPTION	GM/SPEC	DWN	CHKD	SUPV	APVD BY
0	04/05/13	INTERMEDIATE (60%) DESIGN SUBMITTAL		AJW	KLD	JPB	JEF

REVISIONS

APPROVED BY: JEF

SO	
SUPV	JPB
DSGN	KLD
DWN	AJW
CHKD	JPB
OK	JEF
DATE	04/05/13
SCALES	1" = 1'-0"

TOPOCK GROUNDWATER REMEDIATION PROJECT

INTERSECTION DETAILS

GAS TRANSMISSION & DISTRIBUTION
PACIFIC GAS AND ELECTRIC COMPANY
SAN FRANCISCO, CALIFORNIA

MICROFILM
BILL OF MATL
DWG LIST
SUPSDS
SUPSD BY
SHEET NO. of SHEETS
C-07-81
REV

04/05/2013, 09:01, G:\Graphics\ARI\TOPOCK-01\Submittal-60%_March2013\HILL Formatted\C-07-73 to 87_PipeTrenchDetails.dwg, Tab: C-07-81

N1808

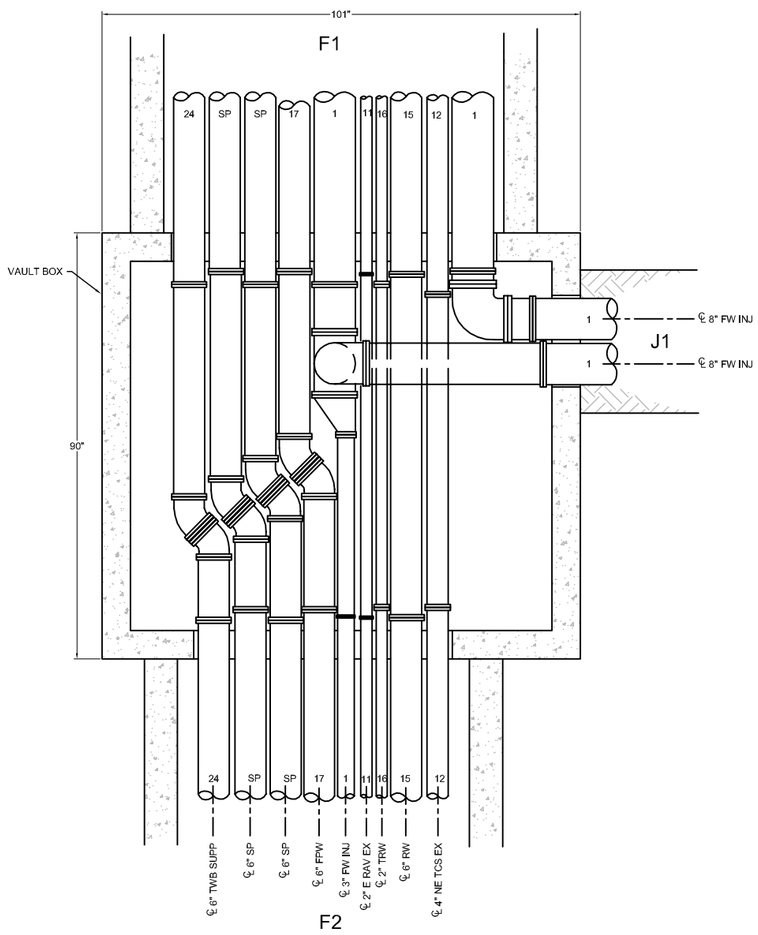

9 DETAIL
3/4"=1'-0"
C-07-36

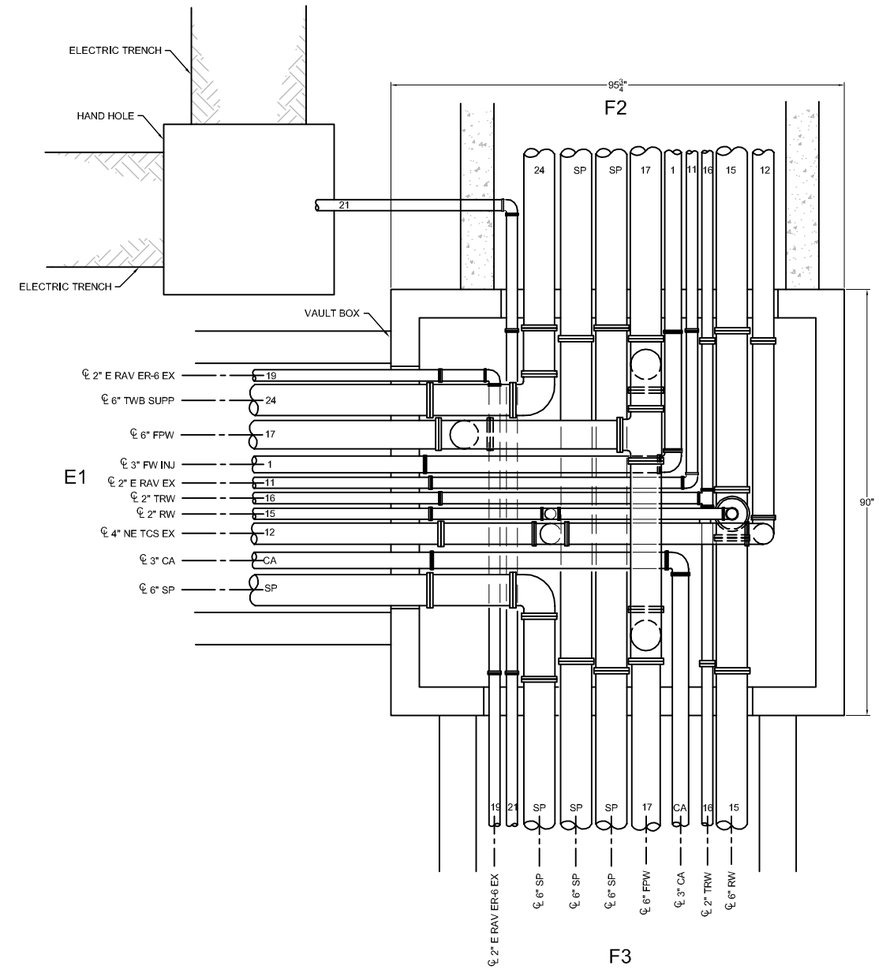

10 DETAIL
3/4"=1'-0"
C-07-36

PIPE ID	SERVICE
1	FRESH WATER INJECTION LOOP
2	UPGRADIENT INJECTION
3	UPGRADIENT BACKWASH
4	NORTH IRZ INJECTION (1-22)
5	SOUTH IRZ INJECTION (24-40)
6	NORTHERN IRZ EXTRACTION
7	IRZ-23 EXTRACTION
8	RIVERBANK EXTRACTION
9	BACKWASH NORTH
10	BACKWASH SOUTH
11	EAST RAVINE EXTRACTION WELL NETWORK HEADER
12	NORTHEAST OF TCS EXTRACTION WELL NETWORK HEADER
13	TCS INJECTION
14	TCS BACKWASH
15	REMEDY WASTEWATER
16	TREATED WATER
17	FIRE PROTECTION WATER
18	SOUTH IRZ EXTRACTION SPARE
19	EAST RAVINE ER-6 EXTRACTION
20	POWER CONDUIT
21	COMMUNICATIONS CONDUIT
22	12kV POWER
24	TWB SUPPLEMENTAL FLOW
CA	CARBON AMENDED WATER
SP	SPARE PIPE

NOTES:

1. SAND SHALL BE USED FROM THE BASE OF THE TRENCH TO 6 INCHES ABOVE THE TOP OF PIPES. SOILS FROM THE TRENCH EXCAVATION SHALL BE MOISTURE CONDITIONED AND USED AS BACKFILL. COMPACT TO 95% RELATIVE COMPACTION TO 12 INCHES BELOW GRADE. FOUR INCHES OF AS-CLASS 2 MATERIAL SHALL BE PLACED ON TOP OF THE COMPACTED SOIL FOLLOWED BY 4 INCHES OF AB-CLASS 2. THE ROADBASE SHALL BE TOPPED WITH A 2-INCH BASE COURSE LAYER AND CAPPED WITH A 2-INCH HMA PG 70-10 SURFACE COURSE.
2. PIPE SUPPORTS AND CLEANOUTS NOT SHOWN FOR CLARITY.
3. ALL COVERS SHALL BE TRAFFIC RATED.
4. CASING SPACERS NOT SHOWN FOR CLARITY.

- DRAFT -
NOT FOR
CONSTRUCTION

ETIC ENGINEERING

ARCADIS

NO.	DATE	DESCRIPTION	GM/SPEC	DWN	CHKD	SUPV	APVD BY
0	04/05/13	INTERMEDIATE (60%) DESIGN SUBMITTAL		AJW	KLD	JPB	JEF

REVISIONS

APPROVED BY: JEF

SO	
SUPV	JPB
DSGN	KLD
DWN	AJW
CHKD	JPB
OK	JEF
DATE	04/05/13
SCALES	1" = 1'-0"

TOPOCK GROUNDWATER REMEDIATION PROJECT

INTERSECTION DETAILS

GAS TRANSMISSION & DISTRIBUTION
PACIFIC GAS AND ELECTRIC COMPANY
SAN FRANCISCO, CALIFORNIA

MICROFILM
BILL OF MATL
DWG LIST
SUPSDS
SUPSD BY
SHEET NO. of SHEETS
C-07-82
REV

04/05/2013, 09:01, G:\Graphics\ARI\TOPOCK-01\Submittal-60%_March2013\HILL Formatted\C-07-73 to 87_PipeTrenchDetails.dwg, Tab: C-07-82

N1808

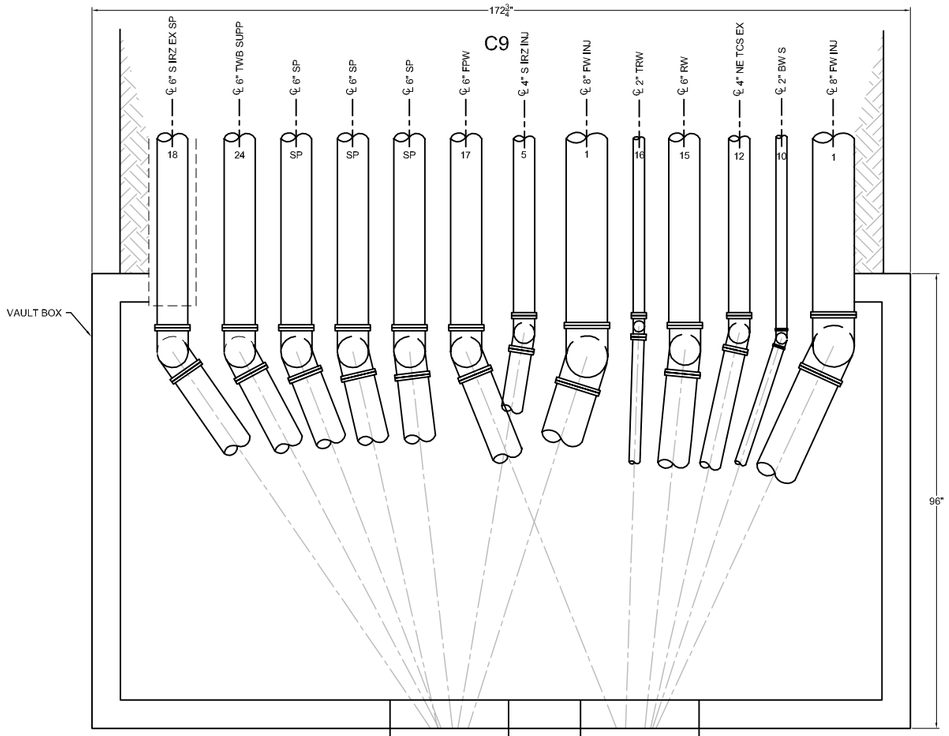

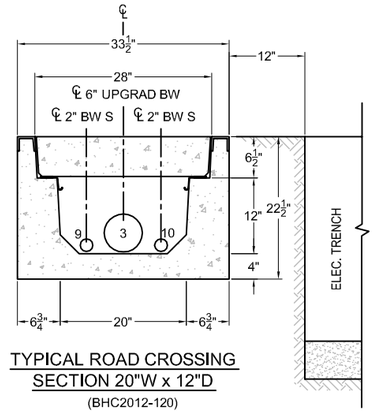

TYPICAL ROAD CROSSING
SECTION 20"W x 12"D
(BHC2012-120)

C20 SECTION
1"=1'-0"
C-07-84

NOTES:

1. SAND SHALL BE USED FROM THE BASE OF THE TRENCH TO 6 INCHES ABOVE THE TOP OF PIPES. SOILS FROM THE TRENCH EXCAVATION SHALL BE MOISTURE CONDITIONED AND USED AS BACKFILL. COMPACT TO 95% RELATIVE COMPACTION TO 12 INCHES BELOW GRADE. FOUR INCHES OF AS-CLASS 2 MATERIAL SHALL BE PLACED ON TOP OF THE COMPACTED SOIL FOLLOWED BY 4 INCHES OF AB-CLASS 2. THE ROADBASE SHALL BE TOPPED WITH A 2-INCH BASE COURSE LAYER AND CAPPED WITH A 2-INCH HMA PG 70-10 SURFACE COURSE.
2. PIPE SUPPORTS AND CLEANOUTS NOT SHOWN FOR CLARITY.
3. ALL COVERS SHALL BE TRAFFIC RATED.
4. CASING SPACERS NOT SHOWN FOR CLARITY.

PIPE ID	SERVICE
1	FRESH WATER INJECTION LOOP
2	UPGRADIENT INJECTION
3	UPGRADIENT BACKWASH
4	NORTH IRZ INJECTION (1-22)
5	SOUTH IRZ INJECTION (24-40)
6	NORTHERN IRZ EXTRACTION
7	IRZ-23 EXTRACTION
8	RIVERBANK EXTRACTION
9	BACKWASH NORTH
10	BACKWASH SOUTH
11	EAST RAVINE EXTRACTION WELL NETWORK HEADER
12	NORTHEAST OF TCS EXTRACTION WELL NETWORK HEADER
13	TCS INJECTION
14	TCS BACKWASH
15	REMEDY WASTEWATER
16	TREATED WATER
17	FIRE PROTECTION WATER
18	SOUTH IRZ EXTRACTION SPARE
19	EAST RAVINE ER-6 EXTRACTION
20	POWER CONDUIT
21	COMMUNICATIONS CONDUIT
22	12kV POWER
24	TWB SUPPLEMENTAL FLOW
CA	CARBON AMENDED WATER
SP	SPARE PIPE

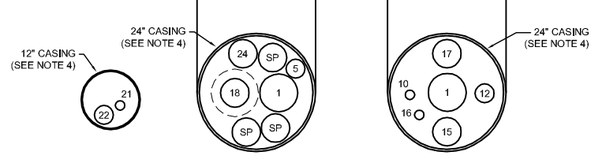

11 DETAIL
3/4"=1'-0"
C-07-30

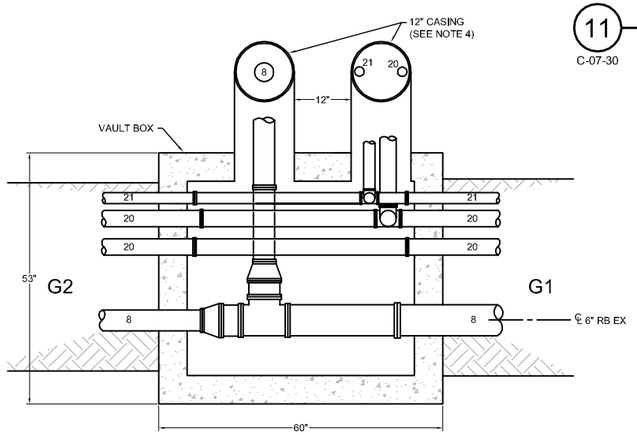

12 DETAIL
3/4"=1'-0"
C-07-38
C-07-39

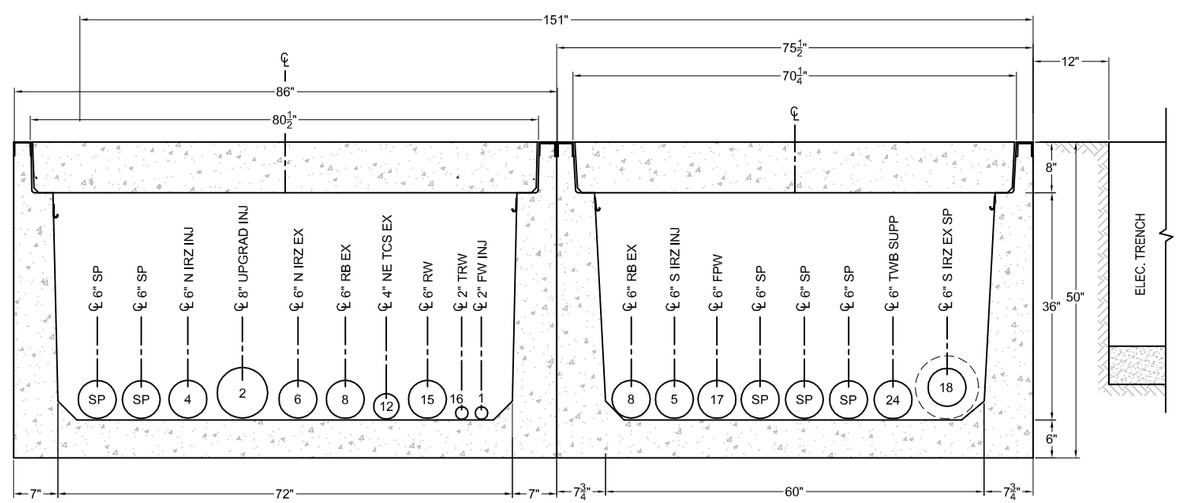

TYPICAL ROAD CROSSING
SECTION 72"W x 36"D
(BHC7236-120)

TYPICAL ROAD CROSSING
SECTION 60"W x 36"D
(BHC6036-120)

C19 SECTION
1"=1'-0"
C-07-84

- DRAFT -
NOT FOR
CONSTRUCTION

ETIC ENGINEERING

ARCADIS

NO.	DATE	DESCRIPTION	GM/SPEC	DWN	CHKD	SUPV	APVD BY
0	04/05/13	INTERMEDIATE (60%) DESIGN SUBMITTAL		AJW	KLD	JPB	JEF

REVISIONS

APPROVED BY	
JEF	
SO	
SUPV	JPB
DSGN	KLD
DWN	AJW
CHKD	JPB
OK	JEF
DATE	04/05/13
SCALES	1" = 1'-0"

TOPOCK GROUNDWATER REMEDIATION PROJECT

INTERSECTION DETAILS

GAS TRANSMISSION & DISTRIBUTION
PACIFIC GAS AND ELECTRIC COMPANY
SAN FRANCISCO, CALIFORNIA

MICROFILM	
BILL OF MATL	
DWG LIST	
SUPSDS	
SUPSD BY	
SHEET NO. of SHEETS	
C-07-83	REV

04/05/2013, 09:01, G:\Graphics\ART\TOPOCK\411\Submittal-60%_March2013\HILL Formatted\C-07-73 to 87_PipeTrench\Details.dwg, Tab: C-07-83

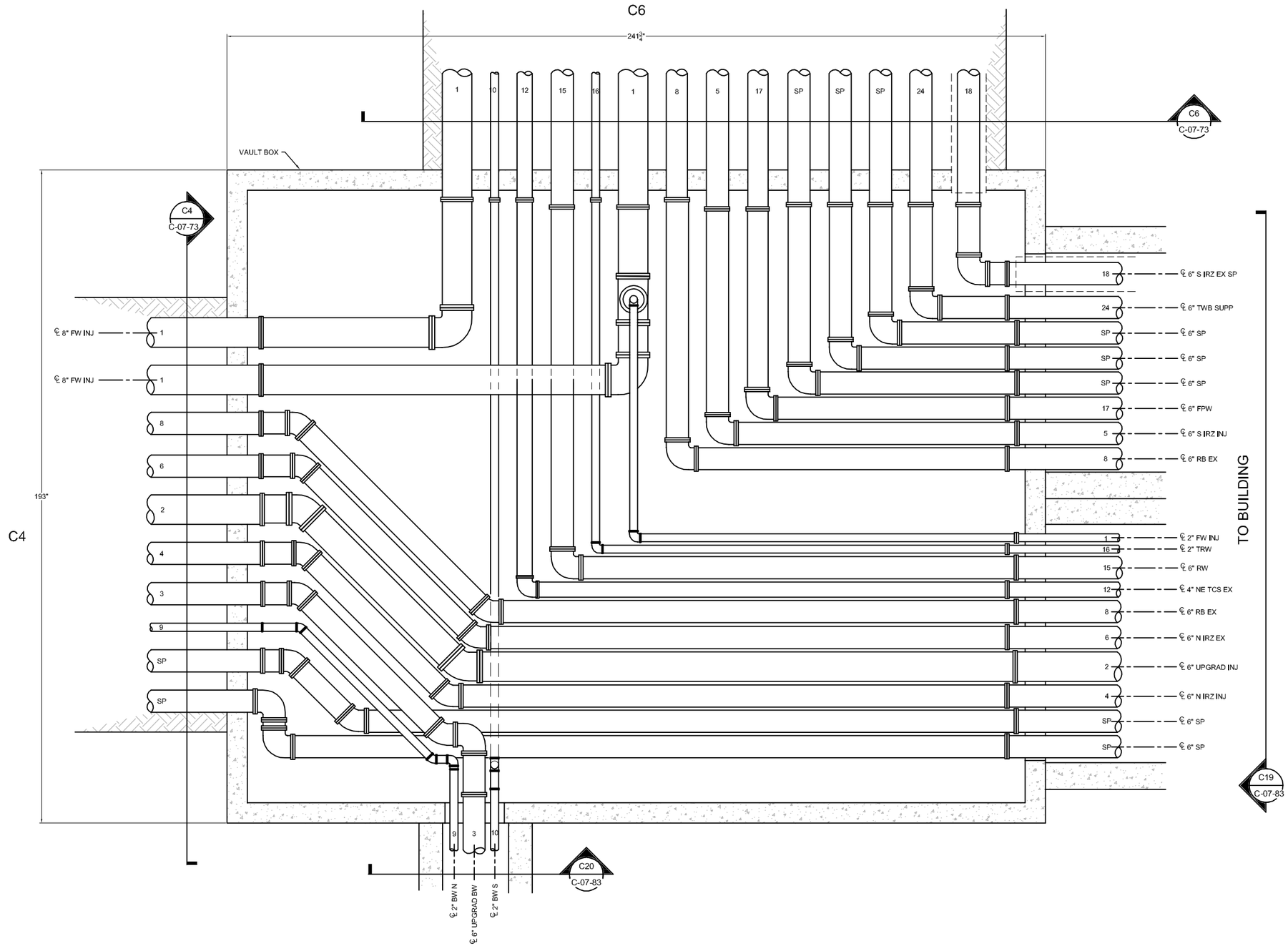

13 DETAIL
3/4"=1'-0"
C-07-27

PIPE ID	SERVICE
1	FRESH WATER INJECTION LOOP
2	UPGRADIENT INJECTION
3	UPGRADIENT BACKWASH
4	NORTH IRZ INJECTION (1-22)
5	SOUTH IRZ INJECTION (24-40)
6	NORTHERN IRZ EXTRACTION
7	IRZ-23 EXTRACTION
8	RIVERBANK EXTRACTION
9	BACKWASH NORTH
10	BACKWASH SOUTH
11	EAST RAVINE EXTRACTION WELL NETWORK HEADER
12	NORTHEAST OF TCS EXTRACTION WELL NETWORK HEADER
13	TCS INJECTION
14	TCS BACKWASH
15	REMEDY WASTEWATER
16	TREATED WATER
17	FIRE PROTECTION WATER
18	SOUTH IRZ EXTRACTION SPARE
19	EAST RAVINE ER-6 EXTRACTION
20	POWER CONDUIT
21	COMMUNICATIONS CONDUIT
22	12kV POWER
24	TWB SUPPLEMENTAL FLOW
CA	CARBON AMENDED WATER
SP	SPARE PIPE

NOTES:

1. SAND SHALL BE USED FROM THE BASE OF THE TRENCH TO 6 INCHES ABOVE THE TOP OF PIPES. SOILS FROM THE TRENCH EXCAVATION SHALL BE MOISTURE CONDITIONED AND USED AS BACKFILL. COMPACT TO 95% RELATIVE COMPACTION TO 12 INCHES BELOW GRADE. FOUR INCHES OF AS-CLASS 2 MATERIAL SHALL BE PLACED ON TOP OF THE COMPACTED SOIL FOLLOWED BY 4 INCHES OF AB-CLASS 2. THE ROADBASE SHALL BE TOPPED WITH A 2-INCH BASE COURSE LAYER AND CAPPED WITH A 2-INCH HMA PG 70-10 SURFACE COURSE.
2. PIPE SUPPORTS AND CLEANOUTS NOT SHOWN FOR CLARITY.
3. ALL COVERS SHALL BE TRAFFIC RATED.

- DRAFT -
NOT FOR CONSTRUCTION

ETIC ENGINEERING

ARCADIS

NO.	DATE	DESCRIPTION	GM/SPEC	DWN	CHKD	SUPV	APVD BY
0	04/05/13	INTERMEDIATE (60%) DESIGN SUBMITTAL		AJW	KLD	JPB	JEF

REVISIONS

APPROVED BY: JEF

SO	
SUPV	JPB
DSGN	KLD
DWN	AJW
CHKD	JPB
OK	JEF
DATE	04/05/13
SCALES	1" = 1'-0"

TOPOCK GROUNDWATER REMEDIATION PROJECT

INTERSECTION DETAILS

GAS TRANSMISSION & DISTRIBUTION
PACIFIC GAS AND ELECTRIC COMPANY
SAN FRANCISCO, CALIFORNIA

MICROFILM
BILL OF MATL
DWG LIST
SUPSDS
SUPSD BY
SHEET NO. of SHEETS
C-07-84
REV

04/05/2013, 09:01, G:\Graphics\ART\TOPOCK\01\Submittal-60%_March2013\HILL Formatted\C-07-73 to 87_PipeTrenchDetails.dwg, Tab: C-07-84

N1808

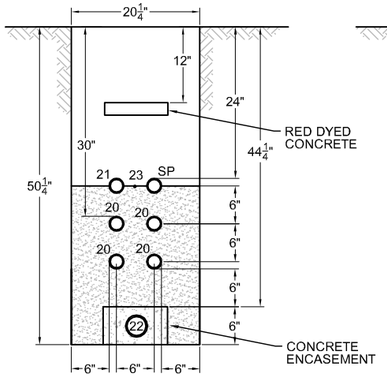

NODE 001; P1-1 thru P1-4

P1-1 P1-2 P1-3 P1-4 SECTION 1"=1'-0"

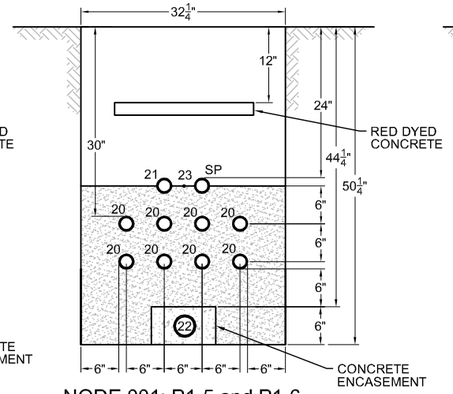

NODE 001; P1-5 and P1-6

P1-5 P1-6 SECTION 1"=1'-0"
C-07-36

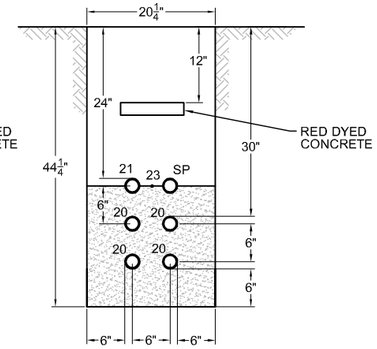

NODE 001; P1-7 thru P1-9, P1-13, P1-14, P1-16

P1-7 P1-8 P1-9 P1-13 P1-14 P1-16 SECTION 1"=1'-0"
C-07-31,-32,-35

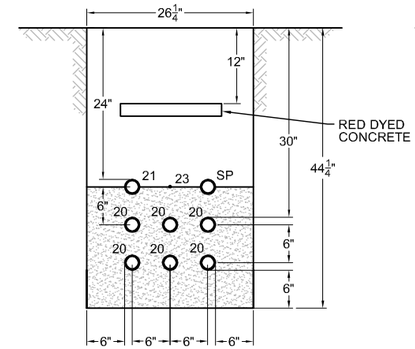

NODE 002; P2-1 and P2-2

P2-1 P2-2 SECTION 1"=1'-0"
C-07-34

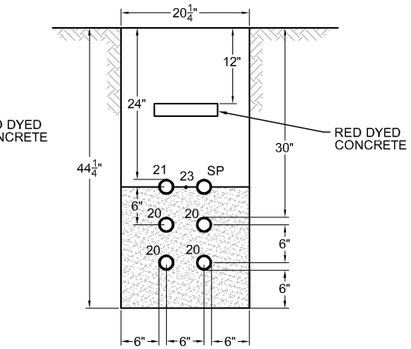

NODE 002; P2-3, P2-4, P2-6 thru P2-9

P2-3 P2-4 P2-6 P2-7 P2-8 P2-9 SECTION 1"=1'-0"
C-07-34

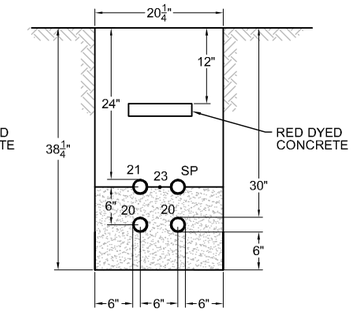

NODE 002; P2-5, P2-10

P2-5 P2-10 SECTION 1"=1'-0"
C-07-34

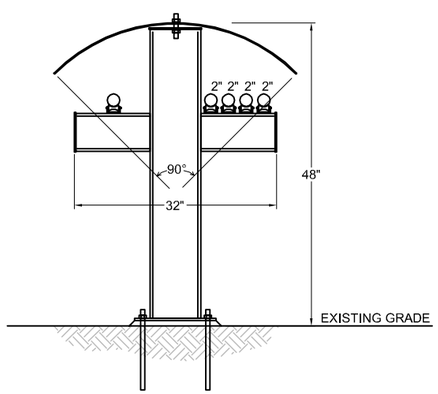

UNISTRUT/STRUCTURAL ABOVE GROUND
NODE 001; P1-10 and P1-11

P1-10 P1-11 SECTION 1"=1'-0"
C-07-32

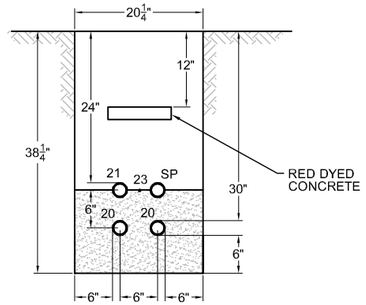

NODE 001; P1-15

P1-15 SECTION 1"=1'-0"
C-07-35

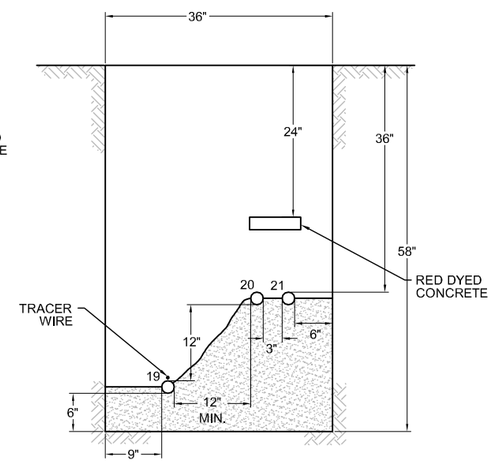

NODE 001; P1-17 thru P1-19

P1-17 P1-18 P1-19 SECTION 1"=1'-0"
C-07-43

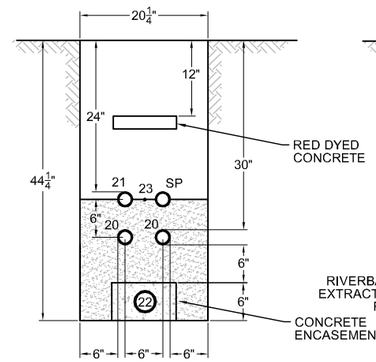

NODE 002; P2-11 thru P2-13

P2-11 P2-12 P2-13 SECTION 1"=1'-0"
C-07-28,-33

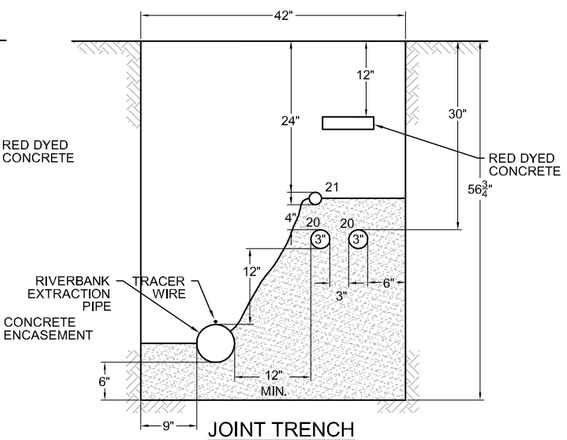

JOINT TRENCH
NODE 002; P2-14, P2-15

P2-14 P2-15 SECTION 1"=1'-0"
C-07-42

NOTE
1. SEE CONDUIT AND CABLE SCHEDULES AND SINGLE LINE DIAGRAMS ON SHEETS E-00-05 THRU E-00-13.
2. BEDDING SHALL EXTEND HALF WAY UP TOP CONDUIT PER THE SPECIFICATIONS.

PIPE ID	SERVICE
20	480V POWER CONDUIT (2", U.N.O)
21	COMMUNICATIONS CONDUIT (2")
22	12kV POWER (3")
23	#2/0 BARE COPPER GROUND
SP	SPARE CONDUIT

- DRAFT -
NOT FOR CONSTRUCTION

ETIC ENGINEERING

ARCADIS

NO.	DATE	DESCRIPTION	GM/SPEC	DWN	CHKD	SUPV	APVD BY
0	04/05/13	INTERMEDIATE (60%) DESIGN SUBMITTAL		AJW	KLD	JPB	JEF

REVISIONS

APPROVED BY JEF

SO	
SUPV	JPB
DSGN	KLD
DWN	AJW
CHKD	JPB
OK	JEF
DATE	04/05/13
SCALES	1" = 1'-0"

TOPOCK GROUNDWATER REMEDIATION PROJECT

ELECTRICAL TRENCH SECTIONS

GAS TRANSMISSION & DISTRIBUTION
PACIFIC GAS AND ELECTRIC COMPANY
SAN FRANCISCO, CALIFORNIA

MICROFILM
BILL OF MATL
DWG LIST
SUPSDS
SUPSD BY
SHEET NO. of SHEETS
C-07-85
REV

04/05/2013, 09:01, G:\Graphics\ARI\TOPOCK-01\Submittal-60%_March2013\HILL Formatted\C-07-73 to 87_PipeTrenchDetails.dwg, Tab: C-07-85

NOTE
1. SEE CONDUIT AND CABLE SCHEDULES AND SINGLE LINE DIAGRAMS ON SHEETS E-00-05 THRU E-00-13.
2. BEDDING SHALL EXTEND HALF WAY UP TOP CONDUIT PER THE SPECIFICATIONS.
3. CASING SPACERS NOT SHOWN FOR CLARITY

PIPE ID	SERVICE
20	480V POWER CONDUIT (2", U.N.O)
21	COMMUNICATIONS CONDUIT (2")
22	12kV POWER (3")
23	#2/0 BARE COPPER GROUND
SP	SPARE CONDUIT

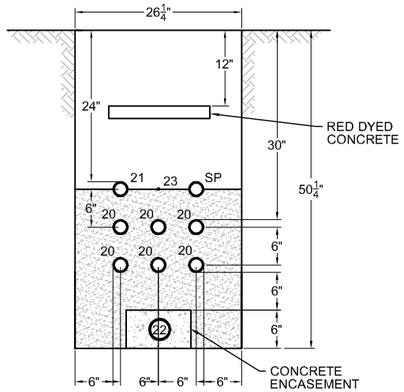

NODE 003; P3-1 thru P3-3

P3-1 P3-2 P3-3 SECTION 1"=1'-0"
C-07-25

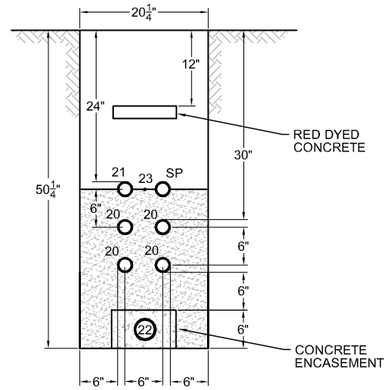

NODE 003; P3-4

P3-4 SECTION 1"=1'-0"
C-07-25

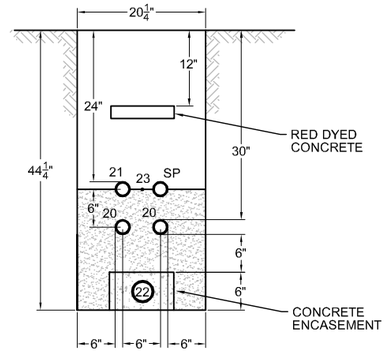

NODE 003; P3-5, P3-6

P3-5 P3-6 SECTION 1"=1'-0"
C-07-25

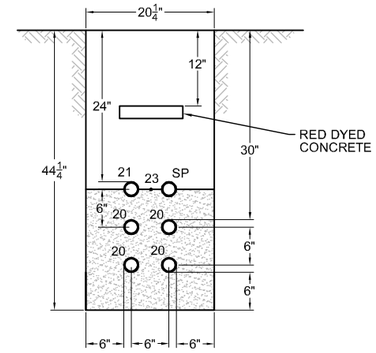

NODE 003; P3-7 thru P3-11

P3-7 P3-8 P3-9 P3-10 P3-11 SECTION 1"=1'-0"
C-07-26

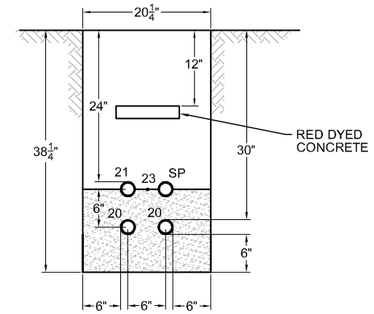

NODE 003; P3-12

P3-12 SECTION 1"=1'-0"
C-07-26

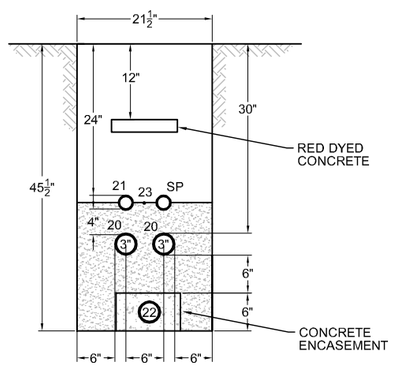

NODE 003; P3-13

P3-13 SECTION 1"=1'-0"
C-07-27

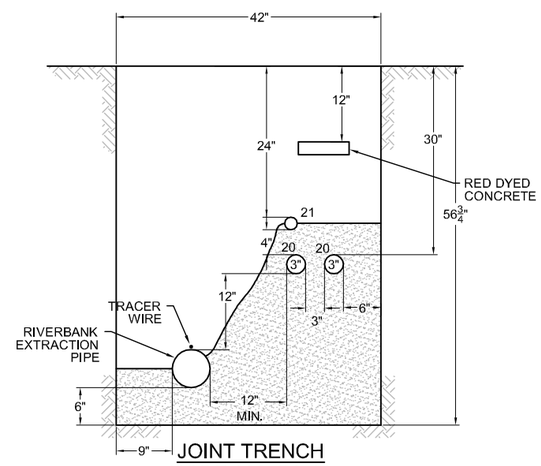

JOINT TRENCH
NODE 003; P3-14

P3-14 SECTION 1"=1'-0"
C-07-40

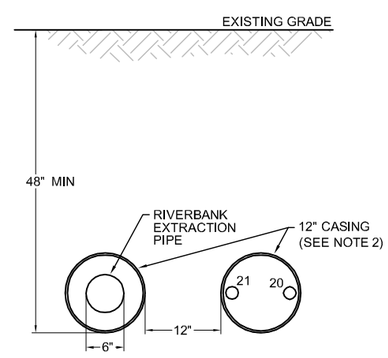

12" DIA. CASING PIPE
NODE 003; P3-15 thru P3-18

P3-15 P3-16 P3-17 P3-18 SECTION 1"=1'-0"
C-07-40,-41

- DRAFT -
NOT FOR CONSTRUCTION

ETIC ENGINEERING

ARCADIS

NO.	DATE	DESCRIPTION	GM/SPEC	DWN	CHKD	SUPV	APVD BY
0	04/05/13	INTERMEDIATE (60%) DESIGN SUBMITTAL		AJW	KLD	JPB	JEF

REVISIONS

APPROVED BY: JEF

SO	
SUPV	JPB
DSGN	KLD
DWN	AJW
CHKD	JPB
OK	JEF
DATE	04/05/13
SCALES	1" = 1'-0"

TOPOCK GROUNDWATER REMEDIATION PROJECT

ELECTRICAL TRENCH SECTIONS

GAS TRANSMISSION & DISTRIBUTION
PACIFIC GAS AND ELECTRIC COMPANY
SAN FRANCISCO, CALIFORNIA

MICROFILM
BILL OF MATL
DWG LIST
SUPSDS
SUPSD BY
SHEET NO. of SHEETS
C-07-86
REV

04/05/2013, 09:02, G:\Graphics\ARTOPOCK\01\Submittal-60%_March2013\HILL Formatted\C-07-73 to 87_PipeTrenchDetails.dwg, Tab: C-07-86

NOTE
1. SEE CONDUIT AND CABLE SCHEDULES AND SINGLE LINE DIAGRAMS ON SHEETS E-00-05 THRU E-00-13.
2. CASING SPACERS NOT SHOWN FOR CLARITY.

PIPE ID	SERVICE
20	480V POWER CONDUIT (2", U.N.O)
21	COMMUNICATIONS CONDUIT (2")
22	12kV POWER (3")
23	#2/0 BARE COPPER GROUND
SP	SPARE CONDUIT

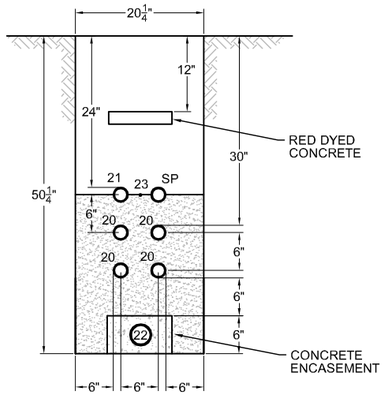

NODE 004; P4-1 thru P4-6

P4-1 P4-2 P4-3 P4-4 P4-5 P4-6 SECTION 1"=1'-0"
C-07-23,-24

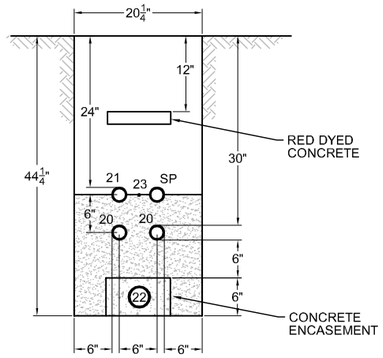

NODE 004; P4-7

P4-7 SECTION 1"=1'-0"
C-07-23

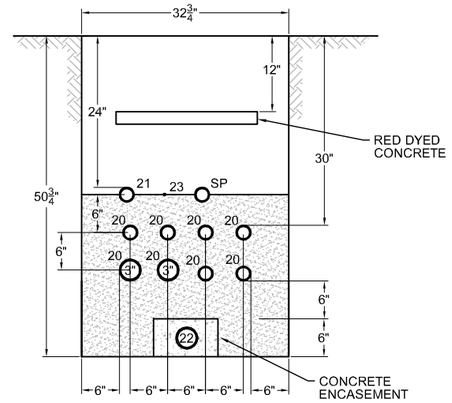

NODE 004; P4-8, P4-9

P4-8 P4-9 SECTION 1"=1'-0"
C-07-24

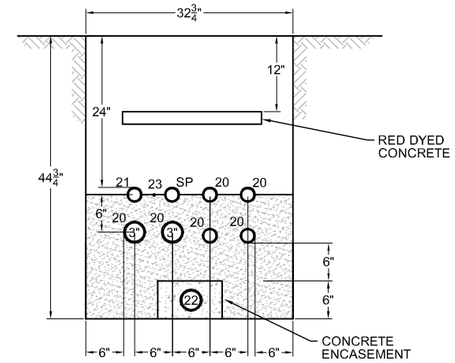

NODE 004; P4-10

P4-10 SECTION 1"=1'-0"
C-07-24

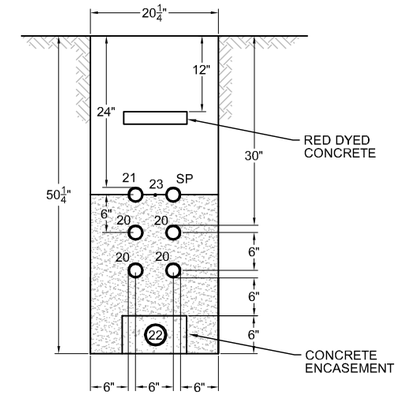

NODE 004; P4-11 and P4-12

P4-11 P4-12 SECTION 1"=1'-0"
C-07-24,-25

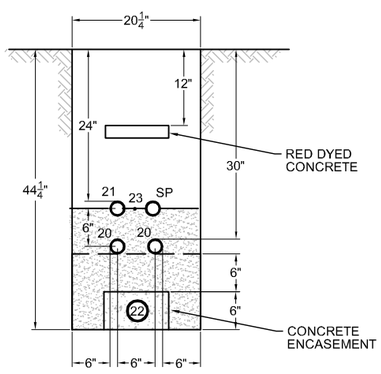

NODE 004; P4-13

P4-13 SECTION 1"=1'-0"
C-07-25

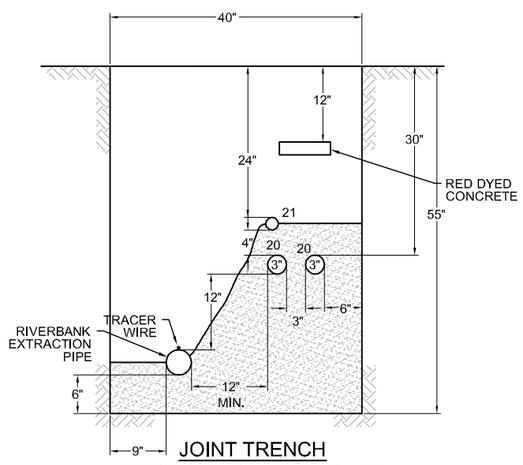

JOINT TRENCH
NODE 004; P4-14 thru P4-16

P4-14 P4-15 P4-16 SECTION 1"=1'-0"
C-07-38

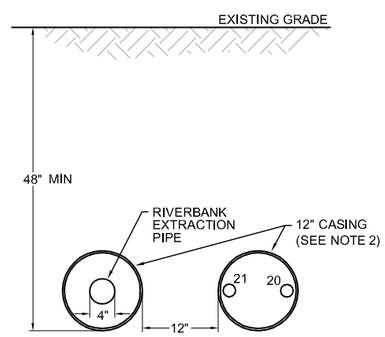

12" DIA. CASING PIPE
NODE 004; P4-17

P4-17 SECTION 1"=1'-0"
C-07-39

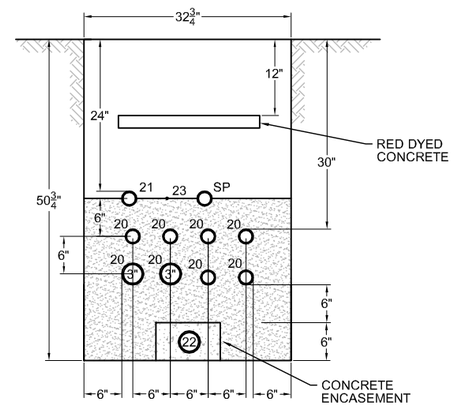

NODE 004; P4-18, P4-19

P4-18 P4-19 SECTION 1"=1'-0"
C-07-24

- DRAFT -
NOT FOR CONSTRUCTION

ETIC ENGINEERING

ARCADIS

NO.	DATE	DESCRIPTION	GM/SPEC	DWN	CHKD	SUPV	APVD BY
0	04/05/13	INTERMEDIATE (60%) DESIGN SUBMITTAL		AJW	KLD	JPB	JEF

REVISIONS

APPROVED BY: JEF

SO	
SUPV	JPB
DSGN	KLD
DWN	AJW
CHKD	JPB
OK	JEF
DATE	04/05/13
SCALES	1" = 1'-0"

TOPOCK GROUNDWATER REMEDIATION PROJECT

ELECTRICAL TRENCH SECTIONS

GAS TRANSMISSION & DISTRIBUTION
PACIFIC GAS AND ELECTRIC COMPANY
SAN FRANCISCO, CALIFORNIA

MICROFILM
BILL OF MATL
DWG LIST
SUPSDS
SUPSD BY
SHEET NO. C-07-87 of SHEETS
REV

04/05/2013, 09:02, G:\Graphics\ART\OPOCK-01\Submittal-60%_March2013\HILL Formatted\C-07-73 to 87_PipeTrenchDetails.dwg, Tab: C-07-87

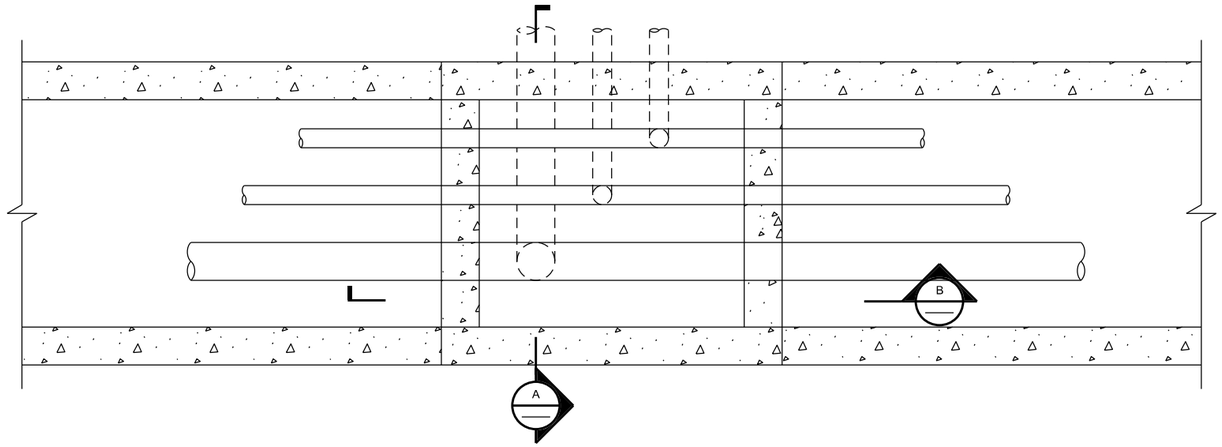

CONCRETE TRENCH JUNCTION BOX

1 DETAIL
1"=1'-0"
C-07-61

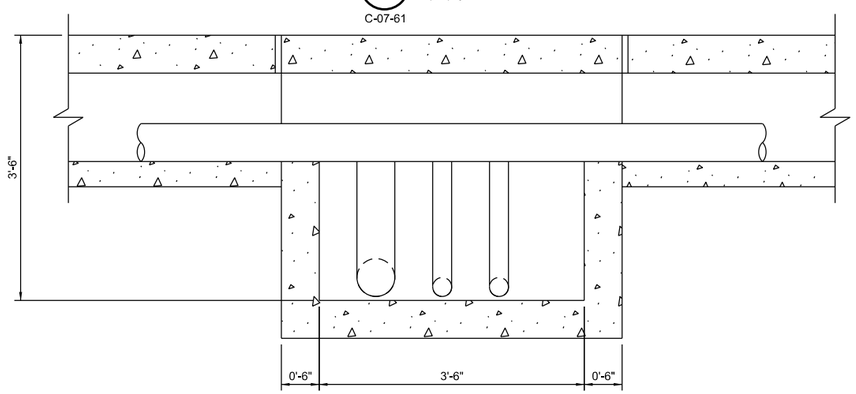

B SECTION
1"=1'-0"

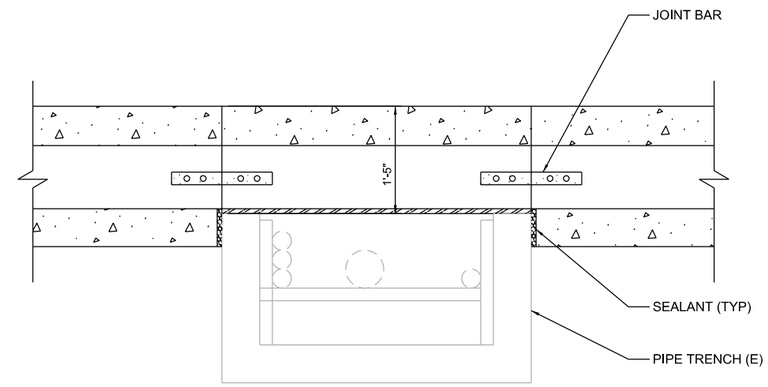

C SECTION
1"=1'-0"

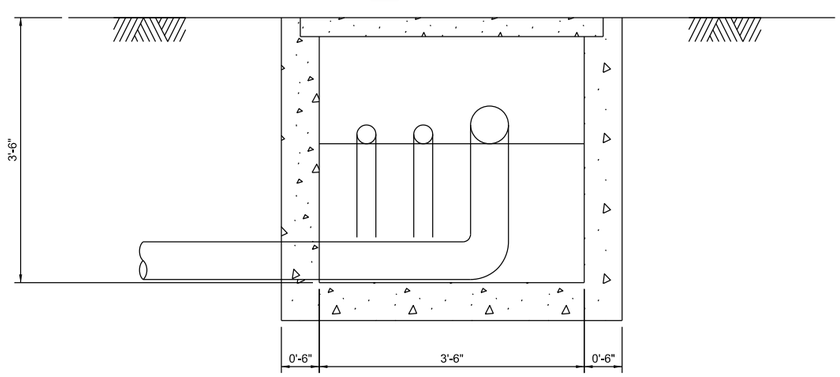

A SECTION
1"=1'-0"

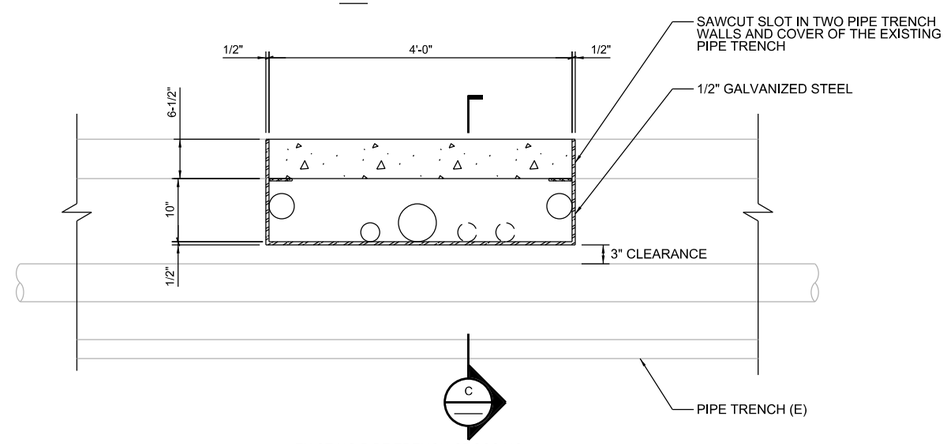

EXISTING PIPE TRENCH CROSSING

2 DETAIL
1"=1'-0"
C-07-62

- DRAFT - NOT FOR CONSTRUCTION

AECOM
2101 WEBSTER STREET SUITE 1000
OAKLAND, CA 94612-3060
PROJECT NO. 60272335

NO.	DATE	DESCRIPTION	GM/SPEC	DWN	CHKD	SUPV	APVD BY
0	9	INTERMEDIATE (60%) DESIGN SUBMITTAL					

REVISIONS

APPROVED BY		
	SO	XXXXX
	SUPV	PD
	DSGN	TL
	DWN	TL
	CHKD	JM
	OK	PD
	DATE	9/12/12
	SCALES	1" = 1'-0"

TOPOCK GROUNDWATER REMEDIATION PROJECT

INTERSECTION DETAILS

GAS TRANSMISSION & DISTRIBUTION
PACIFIC GAS AND ELECTRIC COMPANY
SAN FRANCISCO, CALIFORNIA

MICROFILM
BILL OF MATL
DWG LIST
SUPSOS
SUPSO BY
SHEET NO. C-07-88 OF SHEETS
REV 0

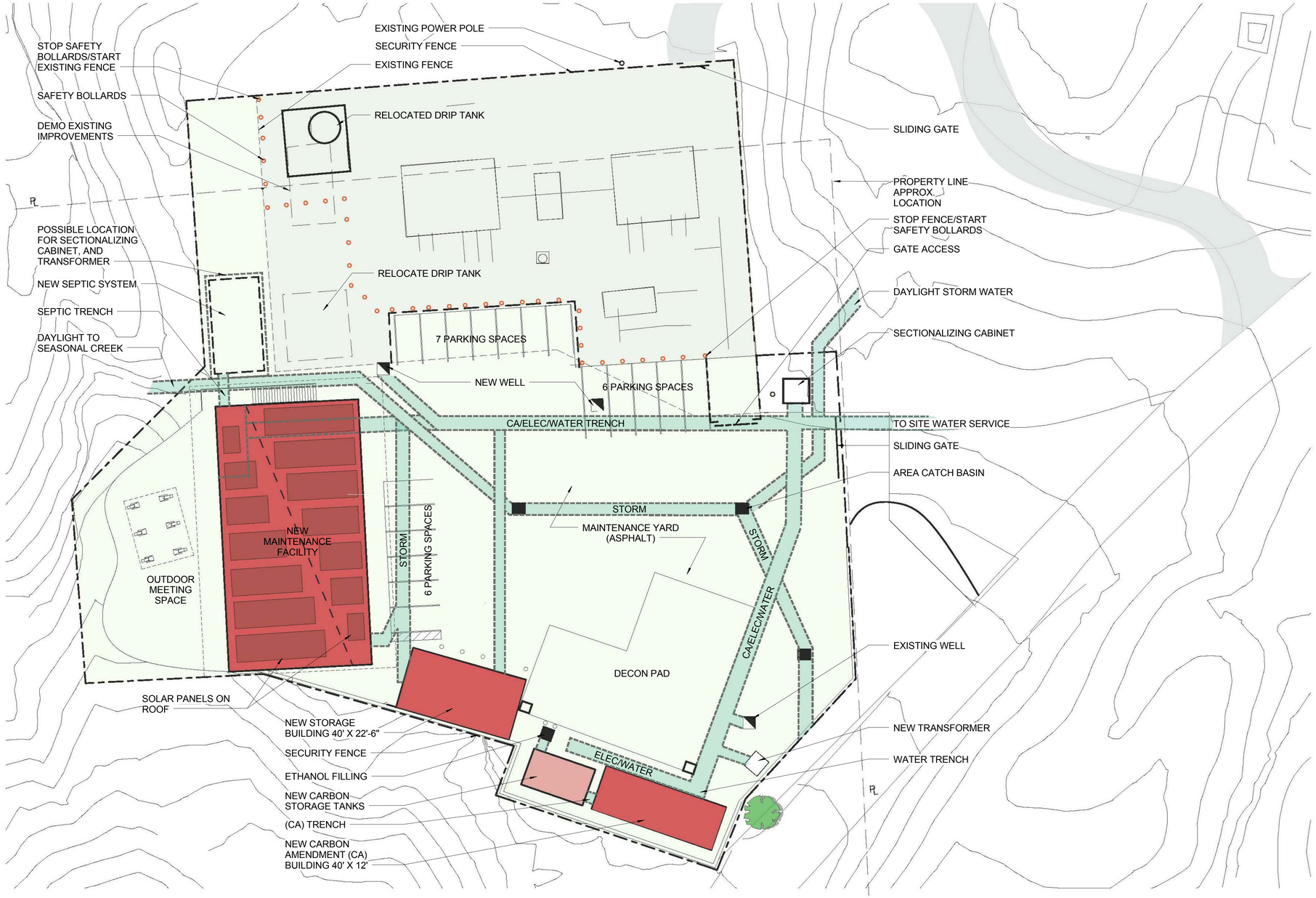

1 TRANSWESTERN BENCH SITE PLAN
1" = 20' - 0"
C-08-01

0' 20' 40' 60'
SCALE 1"=20'

CH2MHILL®

NO.	DATE	DESCRIPTION	GM/SPEC	DWN	CHKD	SUPV	APVD BY

REVISIONS

NO.	DATE	DESCRIPTION	GM/SPEC	DWN	CHKD	SUPV	APVD BY

REVISIONS

APPROVED BY	
SO	
SUPV	
DSGN JD	
DWN JD	
CHKD AV	
OK	AV
DATE	
SCALES	

TOPOCK GROUNDWATER REMEDIATION PROJECT
TRANSWESTERN BENCH SITE PLAN
GAS TRANSMISSION & DISTRIBUTION
PACIFIC GAS AND ELECTRIC COMPANY
SAN FRANCISCO, CALIFORNIA

MICROFILM	
BILL OF MATL	
DWG LIST	
SUPSDS	
SUPSD BY	
SHEET NO. of SHEETS	
C-08-01	REV

FILENAME:
PLOT DATE: $PLOTDATE PLOT TIME: $PLOTTIME
N1808

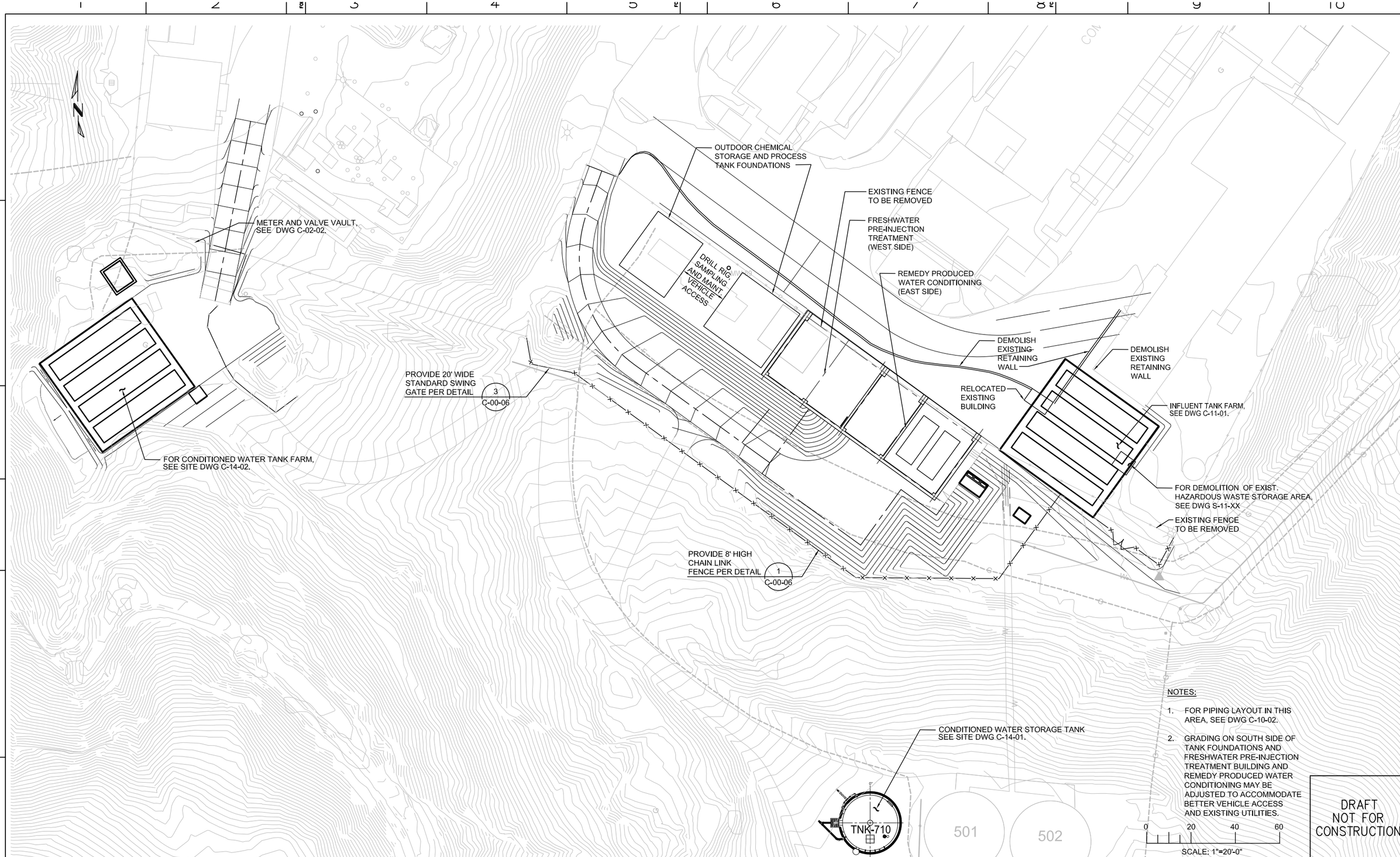

NOTES:

1. FOR PIPING LAYOUT IN THIS AREA, SEE DWG C-10-02.
2. GRADING ON SOUTH SIDE OF TANK FOUNDATIONS AND FRESHWATER PRE-INJECTION TREATMENT BUILDING AND REMEDY PRODUCED WATER CONDITIONING MAY BE ADJUSTED TO ACCOMMODATE BETTER VEHICLE ACCESS AND EXISTING UTILITIES.

DRAFT NOT FOR CONSTRUCTION

E2 Consulting Engineers, Inc.
1900 Powell Street, Ste. 250
Emeryville, CA 94608
(510) 652-1164

CH2MHILL®

NO.	DATE	DESCRIPTION	GM/SPEC	DWN	CHKD	SUPV	APVD BY

REVISIONS

NO.	DATE	DESCRIPTION	GM/SPEC	DWN	CHKD	SUPV	APVD BY

REVISIONS

APPROVED BY	
SO	
SUPV	
DSGN	PT
DWN	PC
CHKD	PT
OK	PT
DATE	4/5/13
SCALES	1" = 20'

TOPOCK GROUNDWATER REMEDIATION PROJECT

TCS CIVIL SITE PLAN 1

GAS TRANSMISSION & DISTRIBUTION
PACIFIC GAS AND ELECTRIC COMPANY
SAN FRANCISCO, CALIFORNIA

MICROFILM	
BILL OF MATL	
DWG LIST	
SUPSDS	
SUPSD BY	
SHEET NO. of SHEETS	
C-10-01	REV

PLOT DATE: $PLOTDATE PLOT TIME: $PLOTTIME
FILENAME: E2-C-XXX-1001AD.DWG

MATCH LINE FOR CONTINUATION SEE SHEET C-10-03

COMPRESSO

2" TW (CONNECTING TO EXISTING BLOWDOWN)

2" WS
4" FO
3" RW
3" CA
4" FW
2" TW
4" 480V

FO HH

HAZMAT STORAGE

PIPELINE I (SEE DWG C-07-63)

FW-2 VALVE AND METER VAULT

4" ELECT
4" FO
2" ACD
4" RW
3" FW
2" FW

FO H.H.

480V H.H.

CONDITIONED WATER STORAGE TANK FARM

4" 480V
4" FO
4" RW
6" DR
4" FW
2" WS
2" TW

2" WS
2" IA
2" UA

480V H.H.
FO H.H.

4" RW
3" FW
2" WS
2" TW
2" TW
2" CAU
2" ACD
4" FO
4" 480V

2" TW
6" DR
4" 480V
4" FQ

2" WS
8" RW
3" CA
6" DR
2" WS
2" TW

2" TO INDUSTRIAL SEWER

2" WS

6" FRW
4" ELECT
4" FO
2" FW
3" CW
2" IA
2" RW
2" SL
2" RW
2" ACD
2" COG
2" CAU
2" UA

3" CA
2" TW
8" RW
6" FRW
4" FO
4" 120V
3" CW

INFLUENT TANK FARM

2" WS

TRANSFORMER 099

2" FW

2" TW
2" TW
2" CAU
2" ACD
6" FW
4" FO
4" 480V
2" IA
2" UA

6" FW

REMEDY-PRODUCED WATER CONDITIONING PLANT

12" KV BURIED CABLE
12" FW

CONDITIONED WATER STORAGE TANK

FO HH
480V HH

0 20 40 60
SCALE: 1"=20'

- DRAFT - NOT FOR CONSTRUCTION

AECOM
2101 WEBSTER STREET SUITE 1000
OAKLAND, CA 94612-3060
PROJECT NO. 60272335

NO.	DATE	DESCRIPTION	GM/SPEC	DWN	CHKD	SUPV	APVD BY
0	9/12/12	INTERMEDIATE (60%) DESIGN SUBMITTAL					

REVISIONS

APPROVED BY
SO XXXXX
SUPV PD
DSGN TL
DWN TL
CHKD JM
OK PD
DATE 9/12/12
SCALES 1" = 20'-0"

TOPOCK GROUNDWATER REMEDIATION PROJECT

PIPE LAYOUT
SHEET 1 OF 3
GAS TRANSMISSION & DISTRIBUTION
PACIFIC GAS AND ELECTRIC COMPANY
SAN FRANCISCO, CALIFORNIA

MICROFILM
BILL OF MATL
DWG LIST
SUPSDS
SUPSD BY
SHEET NO. OF SHEETS
C-10-02
REV 0

N1808

MATCHLINE FOR CONTINUATION SEE SHEET C-10-04

HVC29

589.08

593.54

620.40

COMPRESSOR STATION

620.41

619.92

4" FIBER
3" RW
3" CA
4" FW
4" 480V

624.21

620.55

4" SC
3" CA
2" TW
8" RW
8" FRW
4" FO

620.40

623.87

COMPRESSOR STATION

620.50

N

0 20 40 60

SCALE: 1"=20'

MATCHLINE FOR CONTINUATION SEE SHEET C-10-02

- DRAFT -
NOT FOR CONSTRUCTION

AECOM

2101 WEBSTER STREET SUITE 1000
OAKLAND, CA 94612-3060

PROJECT NO. 60272335

N1808

NO.	DATE	DESCRIPTION	GM/SPEC	DWN	CHKD	SUPV	APVD	BY
0	09/12/12	INTERMEDIATE (60%) DESIGN SUBMITTAL						

REVISIONS

APPROVED BY

SO	XXXXX
SUPV	PD
DSGN	TL
DWN	TL
CHKD	JM
OK	PD
DATE	09/12/12
SCALES	1" = 20'-0"

TOPOCK GROUNDWATER REMEDIATION PROJECT

PIPE LAYOUT
SHEET 2 OF 3

GAS TRANSMISSION & DISTRIBUTION
PACIFIC GAS AND ELECTRIC COMPANY
SAN FRANCISCO, CALIFORNIA

MICROFILM
BILL OF MATL
DWG LIST
SUPSDS
SUPSD BY
SHEET NO. OF SHEETS

C-10-03

REV 0

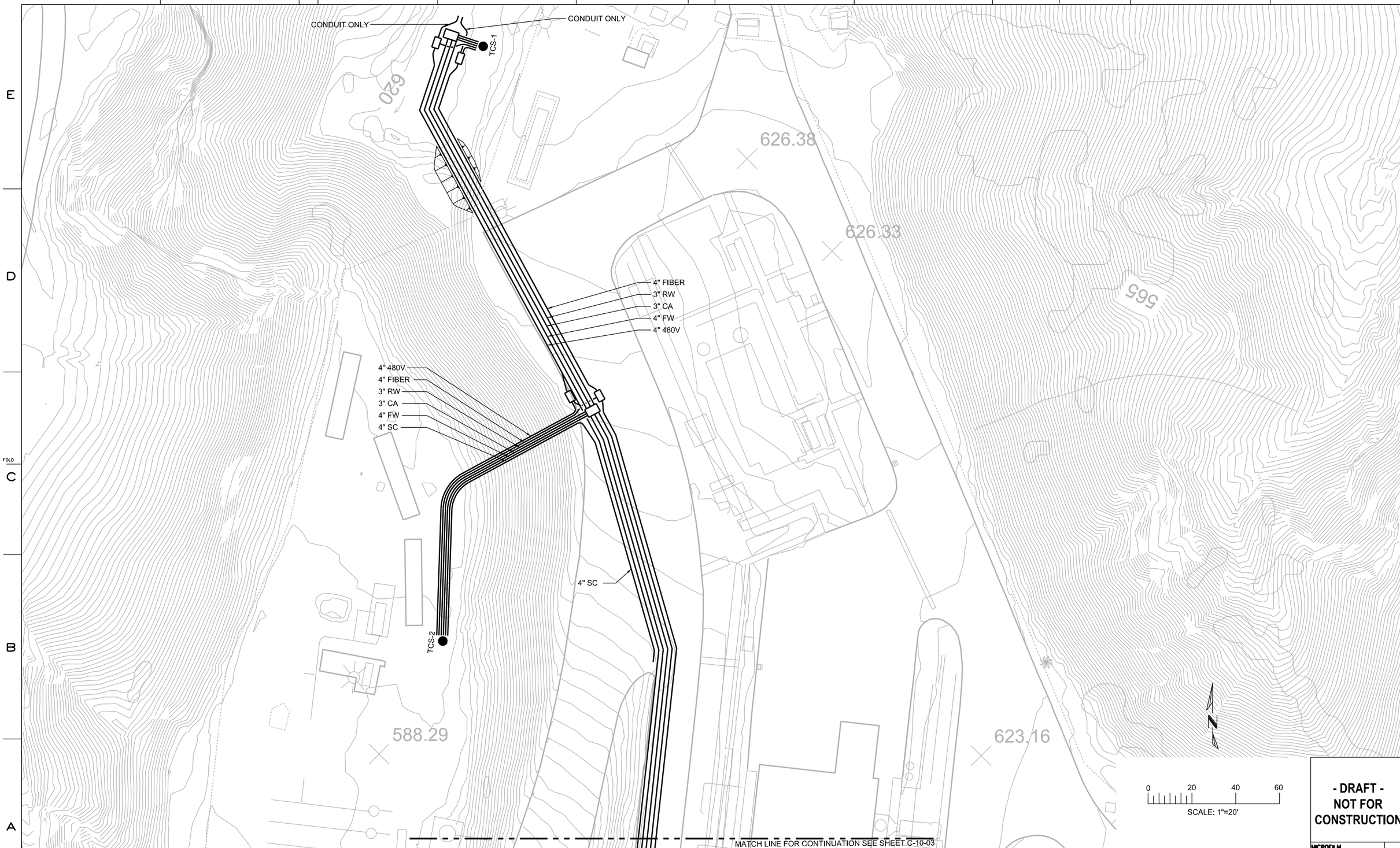

- DRAFT - NOT FOR CONSTRUCTION

AECOM
2101 WEBSTER STREET SUITE 1000
OAKLAND, CA 94612-3060
PROJECT NO. 60272335

NO.	DATE	DESCRIPTION	GM/SPEC	DWN	CHKD	SUPV	APVD BY
0	09/12/12	INTERMEDIATE (60%) DESIGN SUBMITTAL					

REVISIONS

APPROVED BY

SO	XXXXX
SUPV	PD
DSGN	TL
DWN	TL
CHKD	JM
OK	PD
DATE	09/12/12
SCALES	1" = 20'-0"

TOPOCK GROUNDWATER REMEDIATION PROJECT

PIPE LAYOUT
SHEET 3 OF 3
GAS TRANSMISSION & DISTRIBUTION
PACIFIC GAS AND ELECTRIC COMPANY
SAN FRANCISCO, CALIFORNIA

MICROFILM
BILL OF MATL
DWG LIST
SUPSDS
SUPSD BY
SHEET NO. OF SHEETS
C-10-04
REV 0

N1808

NOTES:

1. FOR STRUCTURAL DRAWINGS OF INFLUENT TANK FARM, SEE DWGS S-11-01 THROUGH S-11-03.
2. FOR MECHANICAL DRAWINGS OF INFLUENT TANK FARM, SEE DWGS M-11-01 AND M-11-02.
3. FOR ELECTRICAL DRAWINGS OF INFLUENT TANK FARM, SEE E-11-XX.

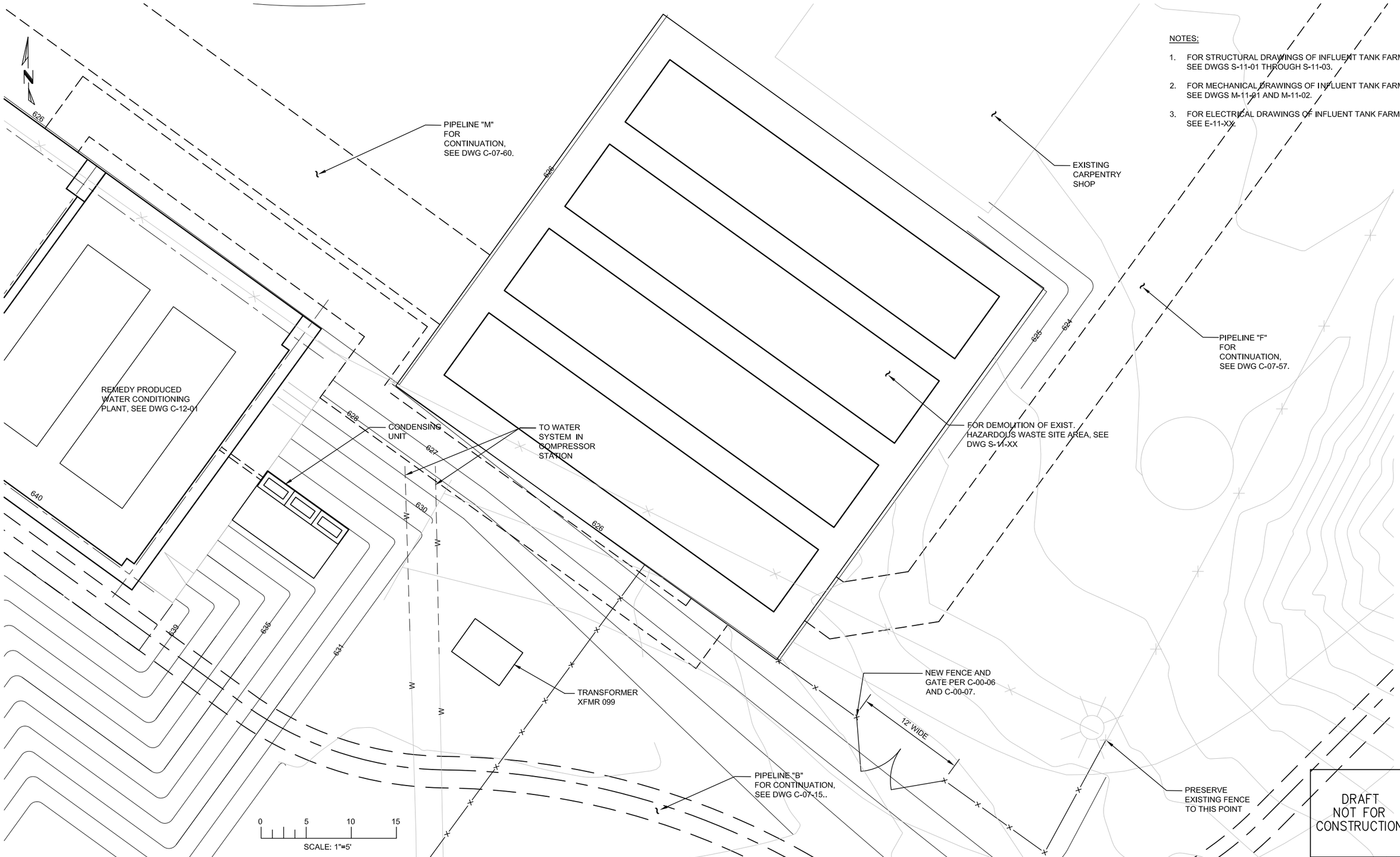

DRAFT NOT FOR CONSTRUCTION

E2 Consulting Engineers, Inc.
1900 Powell Street, Ste. 250
Emeryville, CA 94608
(510) 652-1164

CH2MHILL®

NO.	DATE	DESCRIPTION	GM/SPEC	DWN	CHKD	SUPV	APVD BY

REVISIONS

NO.	DATE	DESCRIPTION	GM/SPEC	DWN	CHKD	SUPV	APVD BY

REVISIONS

APPROVED BY	
SO	
SUPV	
DSGN	PT
DWN	PC
CHKD	PT
OK	PT
DATE	4/5/13
SCALES	1" = 5'

TOPOCK GROUNDWATER REMEDIATION PROJECT

INFLUENT TANK FARM SITE PLAN

GAS TRANSMISSION & DISTRIBUTION
PACIFIC GAS AND ELECTRIC COMPANY
SAN FRANCISCO, CALIFORNIA

MICROFILM	
BILL OF MATL	
DWG LIST	
SUPSDS	
SUPSD BY	
SHEET NO. of SHEETS	
C-11-01	REV

FILENAME: E2-C-XXX-1101AD.DWG
PLOT DATE: $PLOTDATE PLOT TIME: $PLOTTIME

N1808

NOTES:

1. FOR ARCHITECTURAL DRAWINGS OF REMEDY PRODUCED WATER CONDITIONING PLANT, SEE DWGS A-12-01 THROUGH A-12-10.
2. FOR STRUCTURAL DRAWINGS, SEE DWGS S-12-01 THROUGH S-12-09.
3. FOR MECHANICAL DRAWINGS, SEE DWGS M-12-01 THROUGH M-12-07.
4. FOR ELECTRICAL DRAWINGS, SEE DWGS E-12-20 THROUGH E-12-23.

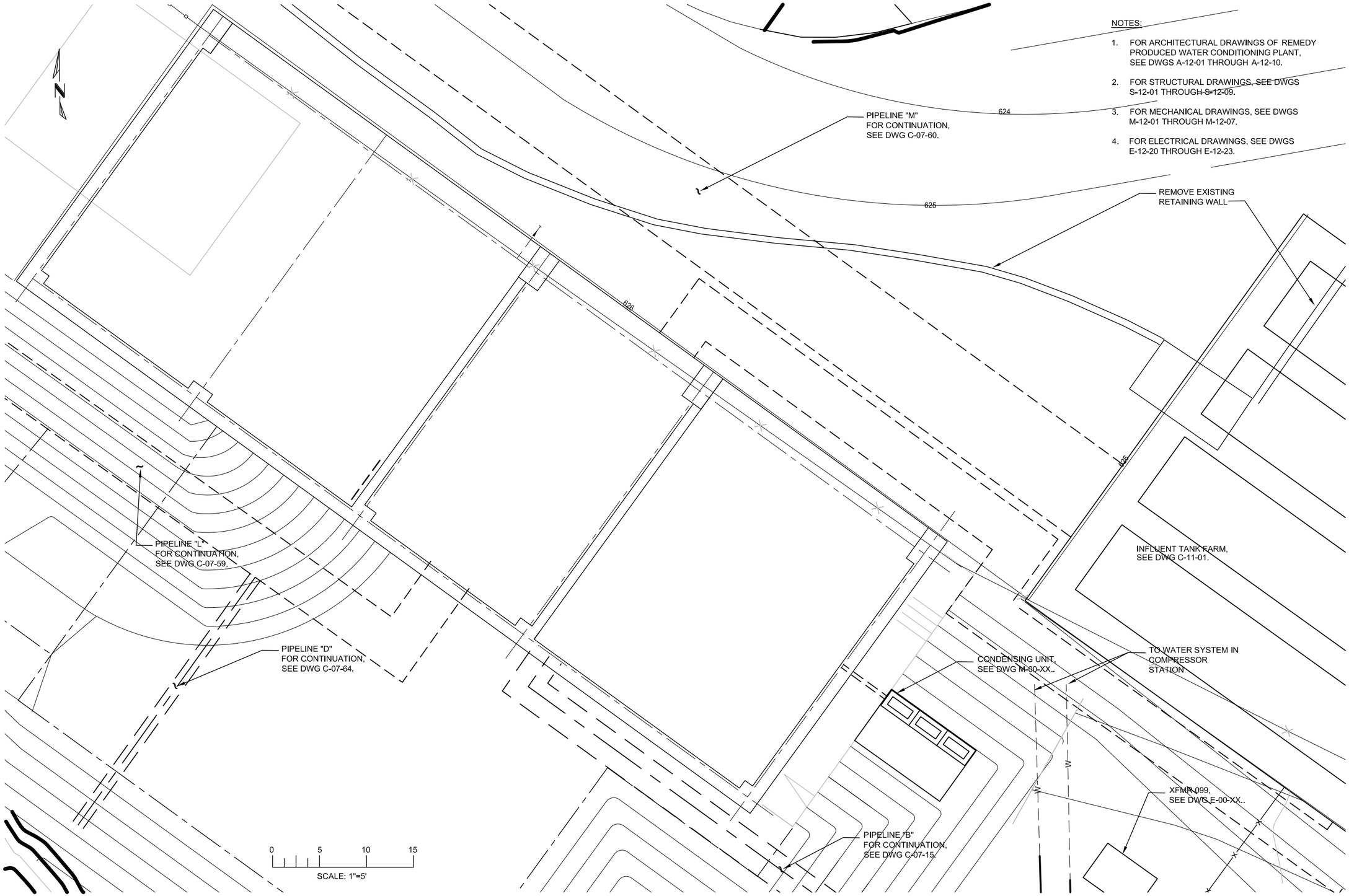

DRAFT
NOT FOR
CONSTRUCTION

E2 Consulting Engineers, Inc.
1900 Powell Street, Ste. 250
Emeryville, CA 94608
(510) 652-1164

CH2MHILL®

NO.	DATE	DESCRIPTION	GM/SPEC	DWN	CHKD	SUPV	APVD BY

REVISIONS

NO.	DATE	DESCRIPTION	GM/SPEC	DWN	CHKD	SUPV	APVD BY

REVISIONS

APPROVED BY	
SO	
SUPV	
DSGN	PT
DWN	PC
CHKD	PT
OK	PT
DATE	4/5/13
SCALES	1" = 5'

TOPOCK GROUNDWATER REMEDIATION PROJECT

REMEDY PRODUCED WATER CONDITIONING PLANT SITE PLAN

GAS TRANSMISSION & DISTRIBUTION

PACIFIC GAS AND ELECTRIC COMPANY
SAN FRANCISCO, CALIFORNIA

MICROFILM	
BILL OF MATL	
DWG LIST	
SUPSDS	
SUPSD BY	
SHEET NO. of SHEETS	REV
C-12-01	

FILENAME: E2-C-XXX-1201AD.DWG
PLOT DATE: $PLOTDATE PLOT TIME: $PLOTTIME

N1808

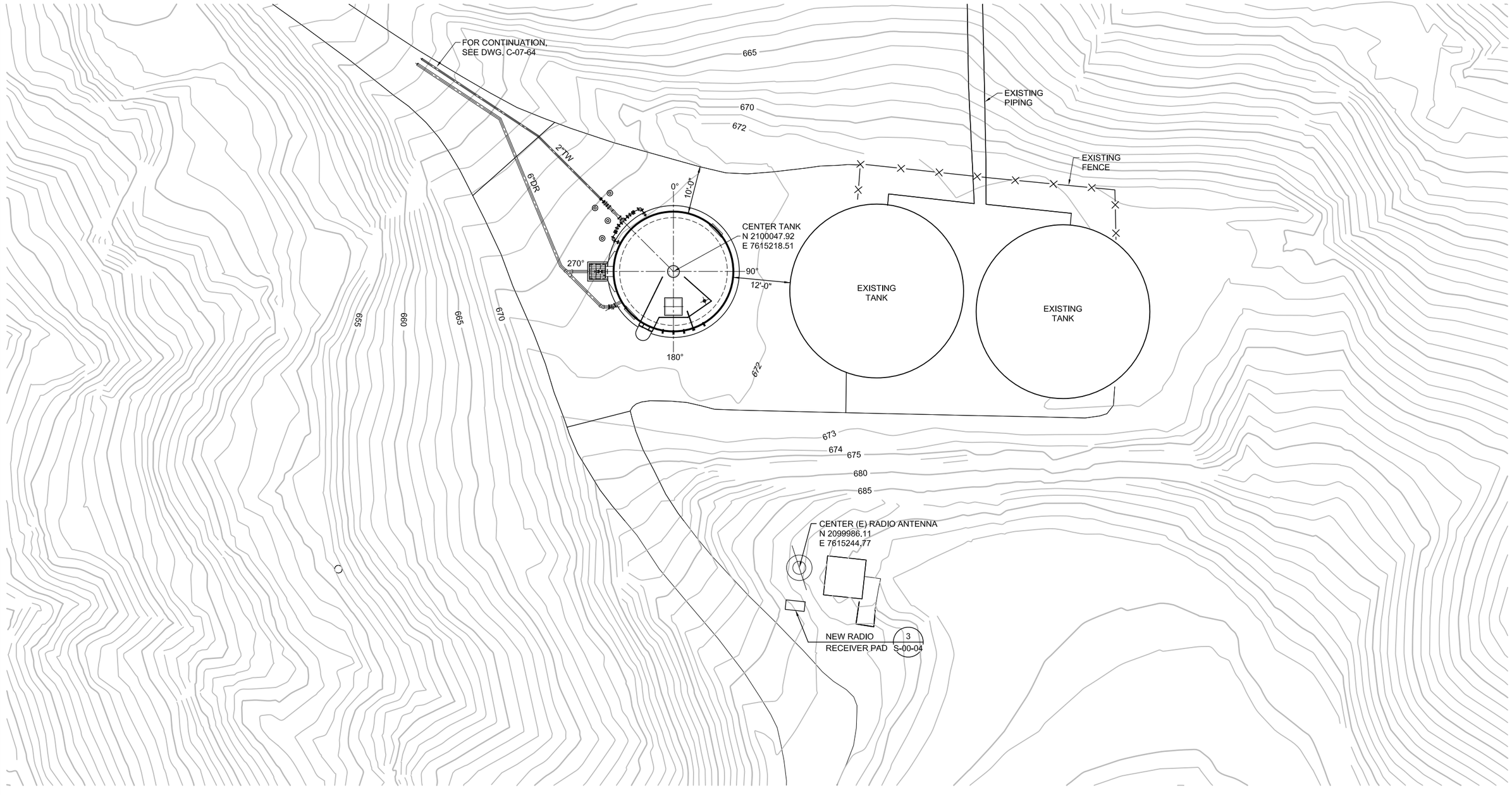

NOTES:

1. FOR TANK PIPING AND EQUIPMENT LAYOUT, SEE DETAIL 1, DWG. S-14-01.

N

CONDITIONED WATER STORAGE TANK SITE PLAN

1" = 10'

0 10 20 30

SCALE: 1"=10'

DRAFT NOT FOR CONSTRUCTION

E2 Consulting Engineers, Inc.
1900 Powell Street, Ste. 250
Emeryville, CA 94608
(510) 652-1164

CH2MHILL®

NO.	DATE	DESCRIPTION	GM/SPEC	DWN	CHKD	SUPV	APVD BY

REVISIONS

NO.	DATE	DESCRIPTION	GM/SPEC	DWN	CHKD	SUPV	APVD BY

REVISIONS

APPROVED BY

SO	
SUPV	
DSGN	KJD
DWN	WTH
CHKD	VMB
OK	
DATE	
SCALES	1" = 10'

TOPOCK GROUNDWATER REMEDIATION PROJECT
CONDITIONED WATER STORAGE TANK SITE PLAN
GAS TRANSMISSION & DISTRIBUTION
PACIFIC GAS AND ELECTRIC COMPANY
SAN FRANCISCO, CALIFORNIA

MICROFILM	
BILL OF MATL	
DWG LIST	
SUPSDS	
SUPSD BY	
SHEET NO. of SHEETS	
C-14-01	REV

FILENAME: E2-C-XXX-1401.dwg
PLOT DATE: $PLOTDATE PLOT TIME: $PLOTTIME
FOLD
N1808

NOTES:

1. FOR STRUCTURAL DRAWINGS OF CONDITIONED WATER STORAGE TANK FARM, SEE DWGS C-14-08 THROUGH C-14-10.
2. FOR MECHANICAL DRAWING, SEE DWG M-14-01.
3. FOR ELECTRICAL DRAWING, SEE DWG E-14-XX.

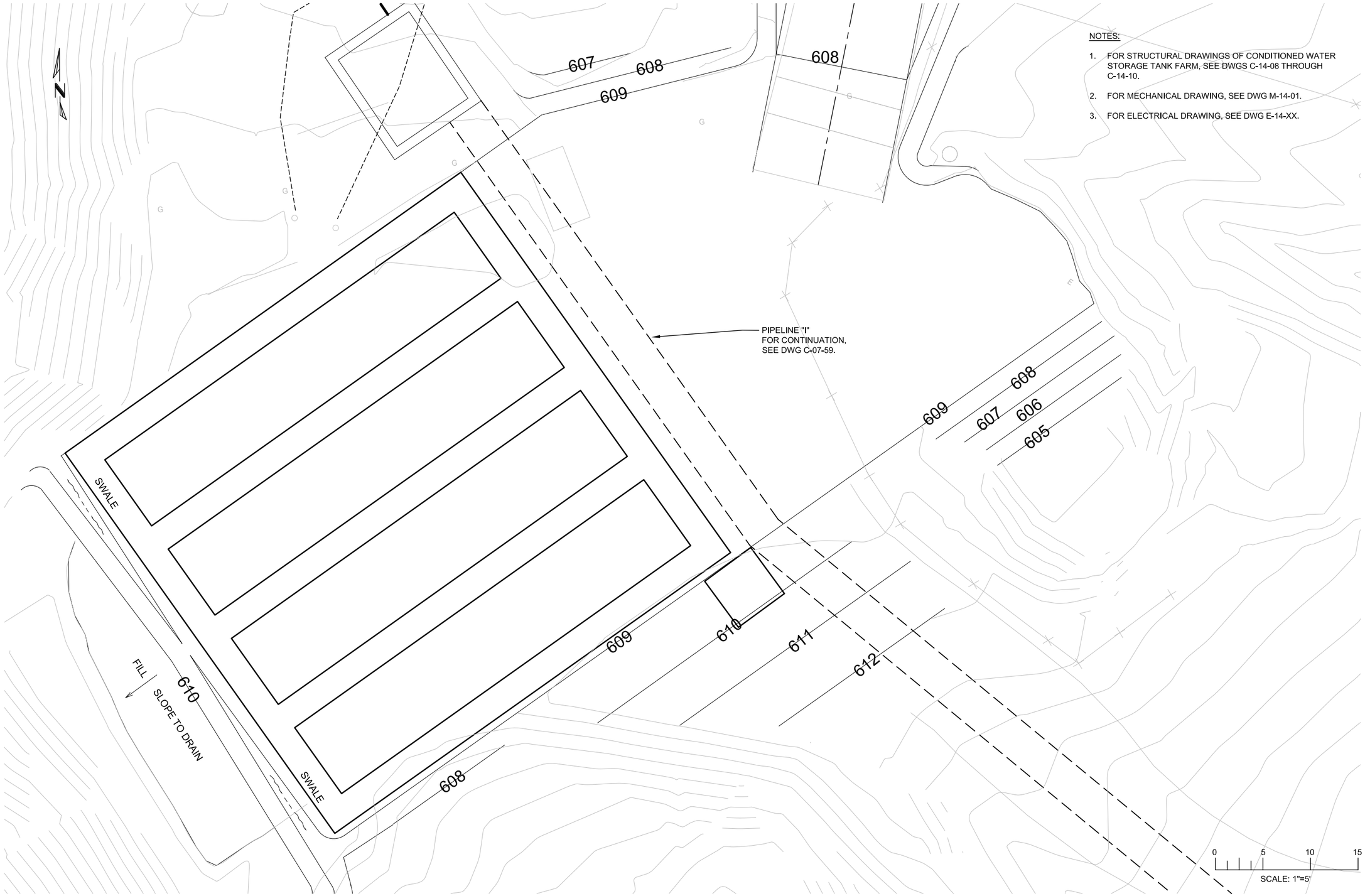

DRAFT
NOT FOR
CONSTRUCTION

E2 Consulting Engineers, Inc.
1900 Powell Street, Ste. 250
Emeryville, CA 94608
(510) 652-1164

CH2MHILL®

NO.	DATE	DESCRIPTION	GM/SPEC	DWN	CHKD	SUPV	APVD BY
		REVISIONS					

NO.	DATE	DESCRIPTION	GM/SPEC	DWN	CHKD	SUPV	APVD BY
		REVISIONS					

APPROVED BY

SO
SUPV
DSGN PT
DWN PC
CHKD CHECKED-BY
OK PT
DATE 4/5/13
SCALES 1" = 5'

TOPOCK GROUNDWATER REMEDIATION PROJECT
CONDITIONED WATER STORAGE TANK FARM
SITE PLAN
GAS TRANSMISSION & DISTRIBUTION
PACIFIC GAS AND ELECTRIC COMPANY
SAN FRANCISCO, CALIFORNIA

MICROFILM
BILL OF MATL
DWG LIST
SUPSDS
SUPSD BY
SHEET NO. of SHEETS
C-14-02
REV

PLOT DATE: $PLOTDATE PLOT TIME: $PLOTTIME
FILENAME: E2-C-XXX-1402AD.DWG