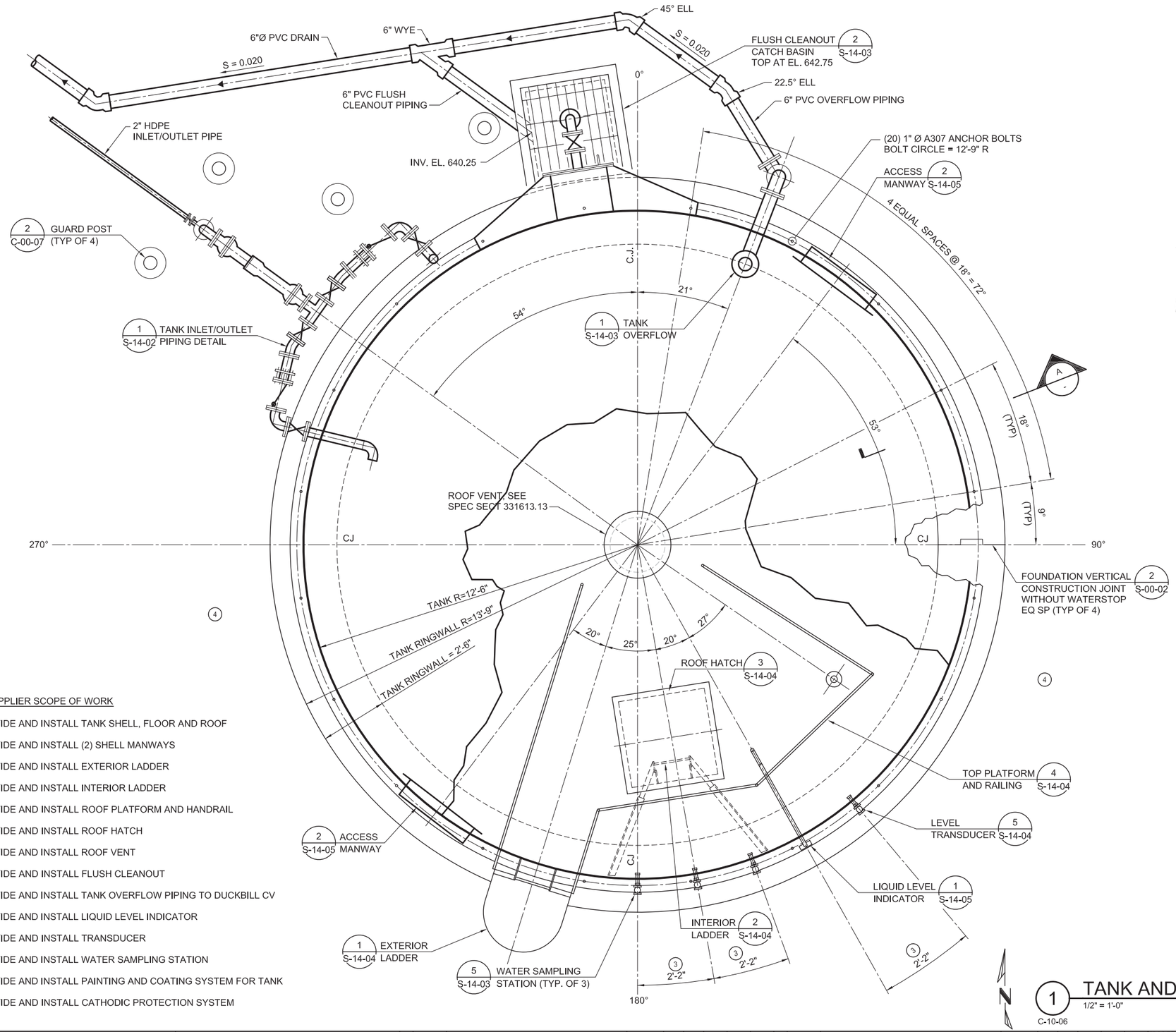

1 TANK AND EQUIPMENT PLAN
1/2" = 1'-0"
C-10-06

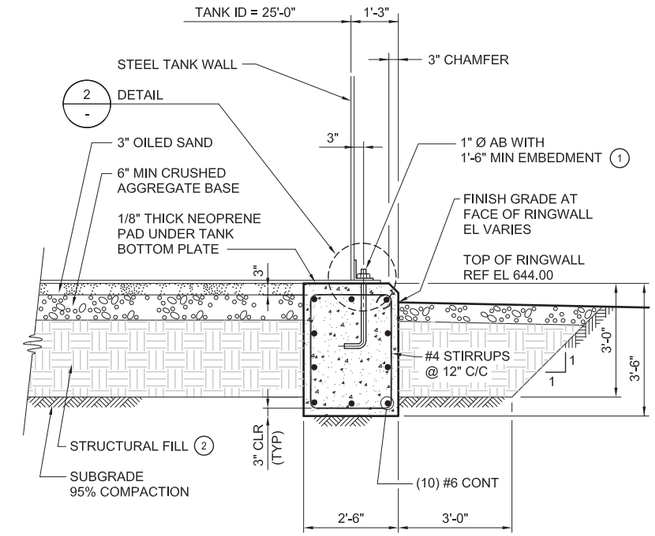

A SECTION
1/2" = 1'-0"

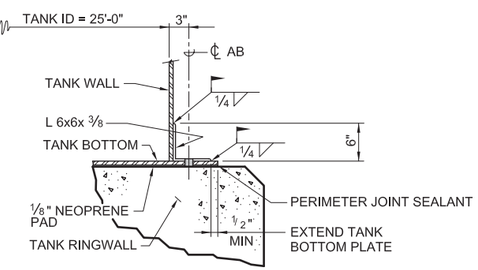

2 DETAIL
1" = 1'-0"

TANK SUPPLIER SCOPE OF WORK

1. PROVIDE AND INSTALL TANK SHELL, FLOOR AND ROOF
2. PROVIDE AND INSTALL (2) SHELL MANWAYS
3. PROVIDE AND INSTALL EXTERIOR LADDER
4. PROVIDE AND INSTALL INTERIOR LADDER
5. PROVIDE AND INSTALL ROOF PLATFORM AND HANDRAIL
6. PROVIDE AND INSTALL ROOF HATCH
7. PROVIDE AND INSTALL ROOF VENT
8. PROVIDE AND INSTALL FLUSH CLEANOUT
9. PROVIDE AND INSTALL TANK OVERFLOW PIPING TO DUCKBILL CV
10. PROVIDE AND INSTALL LIQUID LEVEL INDICATOR
11. PROVIDE AND INSTALL TRANSDUCER
12. PROVIDE AND INSTALL WATER SAMPLING STATION
13. PROVIDE AND INSTALL PAINTING AND COATING SYSTEM FOR TANK
14. PROVIDE AND INSTALL CATHODIC PROTECTION SYSTEM

KEY NOTES:

1. PROVIDE WASHER AND NUT. NUT SHALL BE FINGER TIGHT ONLY, DO NOT TORQUE IT.
2. ALL EXISTING SOIL TO THE ELEVATION OF 641.00 SHALL BE REMOVED AND BACKFILLED WITH STRUCTURAL FILL MATERIAL PER SPECS AND AS INDICATED ON DRAWINGS.
3. MEASURED ALONG OUTSIDE FACE OF TANK WALL.
4. FOR TANK ACCESS ROAD AND RETAINING WALL SEE DWG. C-10-06 AND DWG. S-14-08.

DRAFT
NOT FOR
CONSTRUCTION

E2 Consulting Engineers, Inc.
1900 Powell Street, Ste. 250
Emeryville, CA 94608
(510) 652-1164

CH2MHILL®

NO.	DATE	DESCRIPTION	GM/SPEC	DWN	CHKD	SUPV	APVD	BY
1	9/8/14	PRE-FINAL (90%) DESIGN		WTH	KJ	VMB	VMB	
0	4/5/13	INTERMEDIATE (60%) DESIGN		WTH	KJ	VMB	VMB	

REVISIONS

APPROVED BY
SO
SUPV VMB
DSGN KDD
DWN WTH
CHKD KJ
OK VMB
DATE 9/8/14
SCALES AS SHOWN

TOPOCK GROUNDWATER REMEDIATION PROJECT
CONDITIONED WATER
STORAGE TANK
MECHANICAL PLAN AND DETAILS
GAS TRANSMISSION & DISTRIBUTION
PACIFIC GAS AND ELECTRIC COMPANY
SAN FRANCISCO, CALIFORNIA

MICROFILM
BILL OF MATL
DWG LIST
SUPSDS
SUPSD BY
SHEET NO. of SHEETS
S-14-01
REV 1

PLOT DATE: $PLOTDATE PLOT TIME: $PLOTTIME
FILENAME: E2-S-XXX-1401.dwg

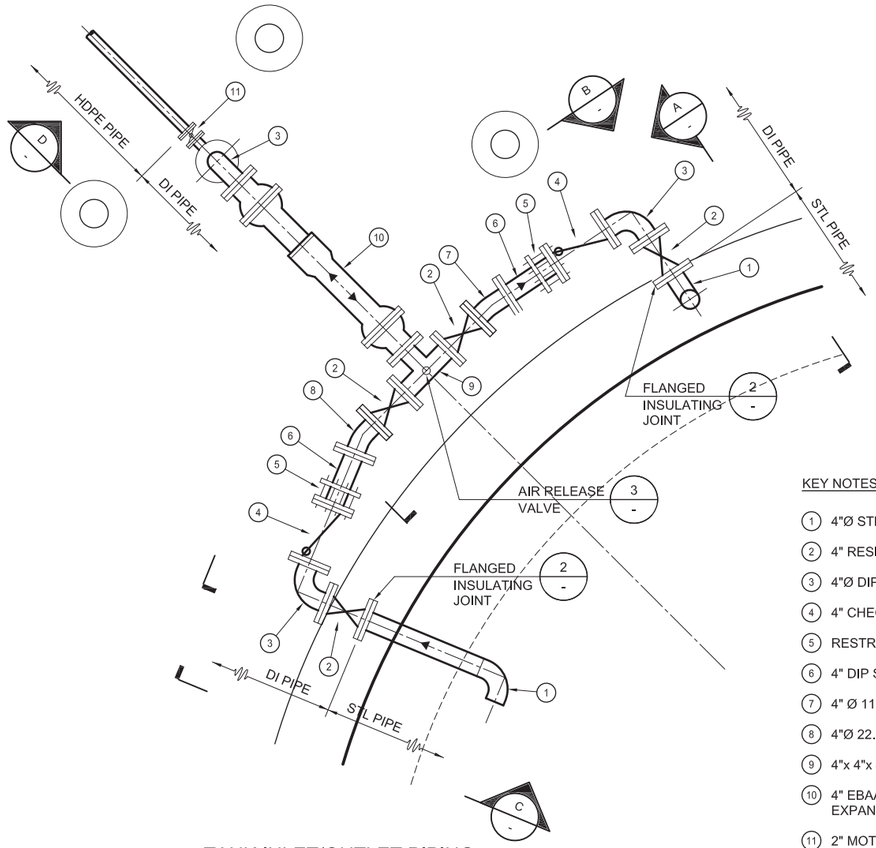

TANK INLET/OUTLET PIPING

1 DETAIL
3/4" = 1'-0"
S-14-01

KEY NOTES:

1. 4"Ø STL 90° LR ELL
2. 4" RESILIENT WEDGE GATE VALVE, FLG x FLG
3. 4"Ø DIP 90° ELL, FLG x FLG
4. 4" CHECK VALVE, EXTERNAL SPRING LOADED
5. RESTRAINED FCA
6. 4" DIP SPOOL PIECE
7. 4" Ø 11.25° ELL, FLG x FLG
8. 4"Ø 22.5° ELL, FLG x FLG
9. 4"x 4"x 4" DIP TEE, FLG x FLG x FLG
10. 4" EBAA IRON "FLEXTEND" DOUBLE BALL EXPANSION JOINT, FLG x FLG
11. 2" MOTOR OPERATED BUTTERFLY VALVE, FLG x FLG
12. 3/8" MIN THICK STEEL PLATE, 14" OD

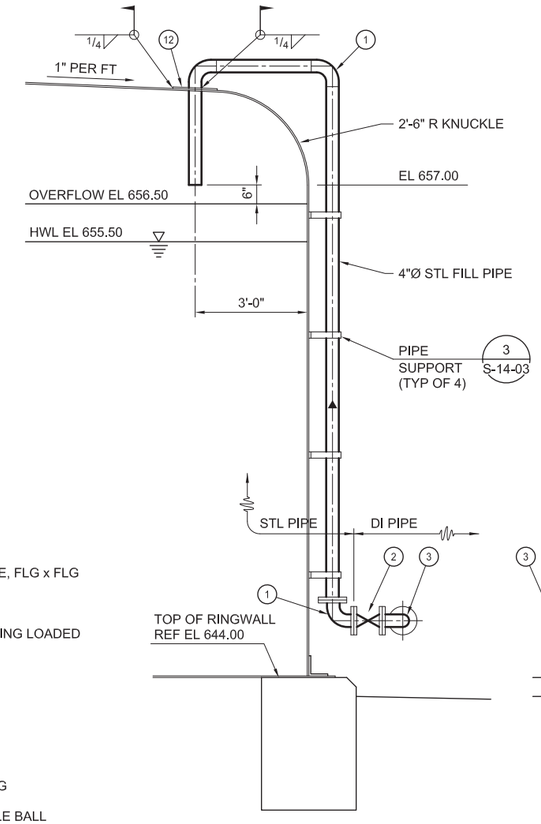

A SECTION
1/2" = 1'-0"

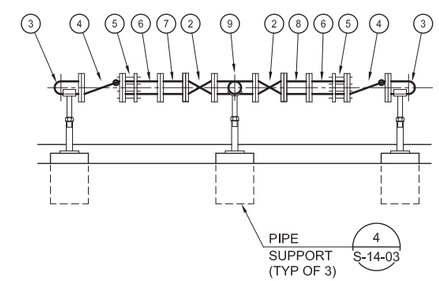

B SECTION
1/2" = 1'-0"

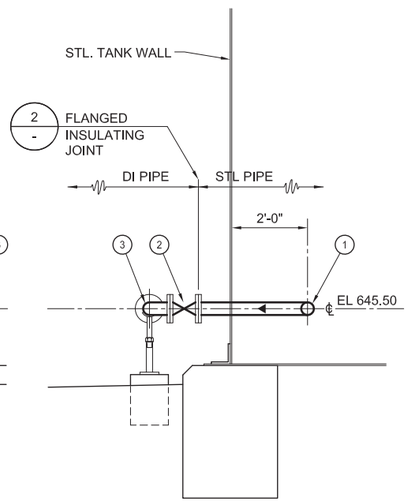

C SECTION
1/2" = 1'-0"

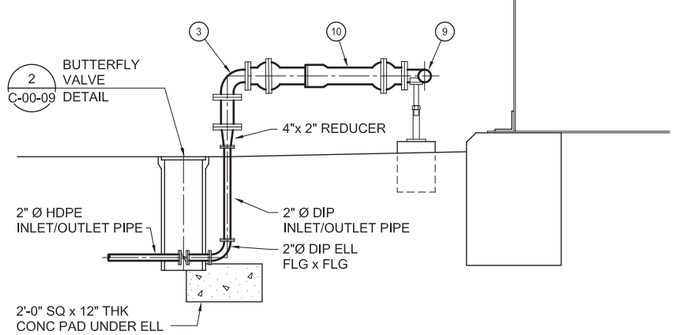

D SECTION
1/2" = 1'-0"

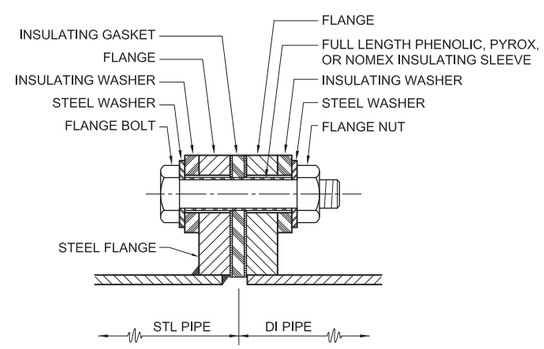

FLANGED INSULATING JOINT

2 DETAIL
NTS
S-14-03
S-02-04

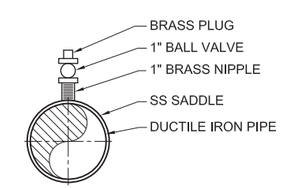

AIR RELEASE VALVE

3 DETAIL
NTS

DRAFT
NOT FOR
CONSTRUCTION

E2 Consulting Engineers, Inc.
1900 Powell Street, Ste. 250
Emeryville, CA 94608
(510) 652-1164

CH2MHILL®

NO.	DATE	DESCRIPTION	GM/SPEC	DWN	CHKD	SUPV	APVD BY
1	9/8/14	PRE-FINAL (90%) DESIGN		WTH	KJ	VMB	VMB
0	4/5/13	INTERMEDIATE (60%) DESIGN		WTH	KJ	VMB	VMB

REVISIONS

APPROVED BY
SO
SUPV VMB
DSGN KDD
DWN WTH
CHKD KJ
OK VMB
DATE 9/8/14
SCALES AS SHOWN

TOPOCK GROUNDWATER REMEDIATION PROJECT
CONDITIONED WATER STORAGE TANK
SECTIONS AND DETAILS
GAS TRANSMISSION & DISTRIBUTION
PACIFIC GAS AND ELECTRIC COMPANY
SAN FRANCISCO, CALIFORNIA

MICROFILM
BILL OF MATL
DWG LIST
SUPSDS
SUPSD BY
SHEET NO. of SHEETS
S-14-02
REV 1

PLOT DATE: $PLOTDATE PLOT TIME: $PLOTTIME
FILENAME: E2-S-XXX-1402.dwg

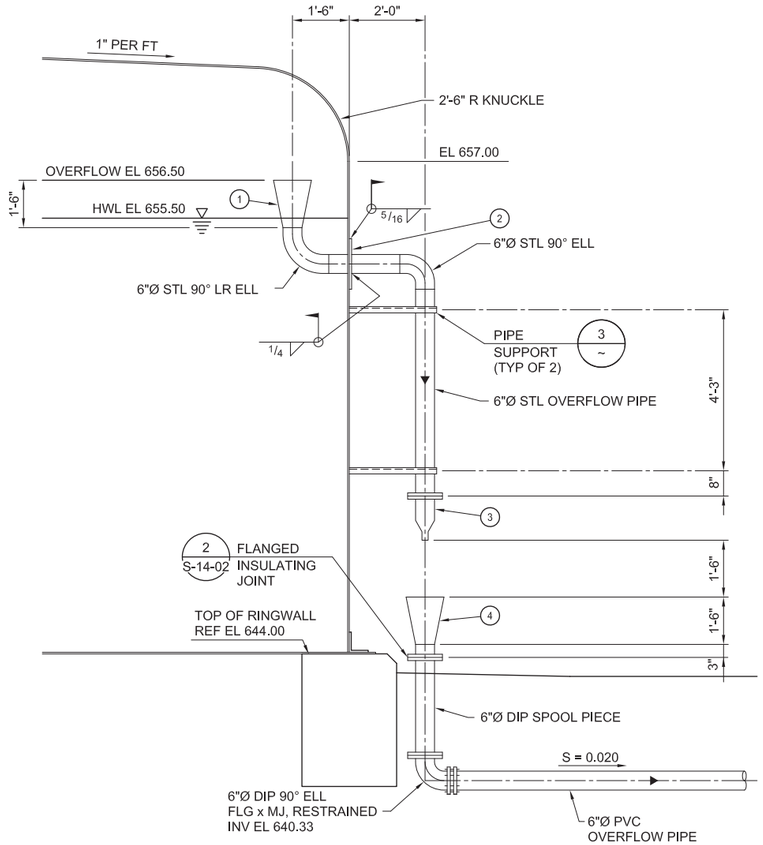

OVERFLOW PIPING

1 DETAIL
1/2" = 1'-0"
S-14-01

KEY NOTES:

1. 12" x 6" STEEL CONE, 3/8" WALL
2. 3/8" MIN THK STL PLATE, 16" OD
3. ONYX VALVE CO 6" FLANGED "DUCKBILL" CHECK VALVE, SERIES DBCP
4. 12" x 6" STEEL CONE, 3/8" WALL, EPOXY COATED WITH SS 316 BIRDSCREEN ON WIDE END (TOP)
5. NOT USED
6. STL PLATE, 0.625"x 36"H x 72", CUT AS SHOWN
7. STL PLATE, 0.625"x 16 1/2"x 65", ROLL AND TRIM
8. STL PLATE, 1/2"x 31 3/4"x 32", CUT AND DRILL BOLT HOLES
9. FULL FACE GASKET, 1/8" WITH HOLES TO MATCH ITEM 8
10. STL PLATE, 5/8"x 31 3/4"x 32", OD AND BOLTHOLES MATCH ITEM NUMBER 8
11. (36) 3/4"Ø SS 316 BOLT, NUT AND FLAT WASHER, 3/4"10 UNC x 2 1/2" LONG
12. WELD TO FACE PLATE: STL PIPE, 6" SCH 80 x 9 3/4" LONG WITH 4" 150# FLANGE
13. 6" GATE VALVE, FLG x FLG
14. 6" DIP 90° ELL, FLG x FLG
15. 6" OPEN FLANGE WITH SS 316 MESH BIRDSCREEN BOLTED BETWEEN FLANGES
16. STL. ROUND BAR HANDLE, 3/4"x 13" LONG BENT AS SHOWN
17. SS HEAVY DUTY HINGE
18. 6" STL 90° ELL, PE x PE
19. PRE-FORMED PLASTIC ADHESIVE WATERSTOP WRAPPED AROUND PIPE

NOTES:

1. DIMENSIONS, WELDING, AND DETAILS NOT SHOWN SHALL BE AS PER TANK MANUFACTURER'S APPROVED SUBMITTALS.

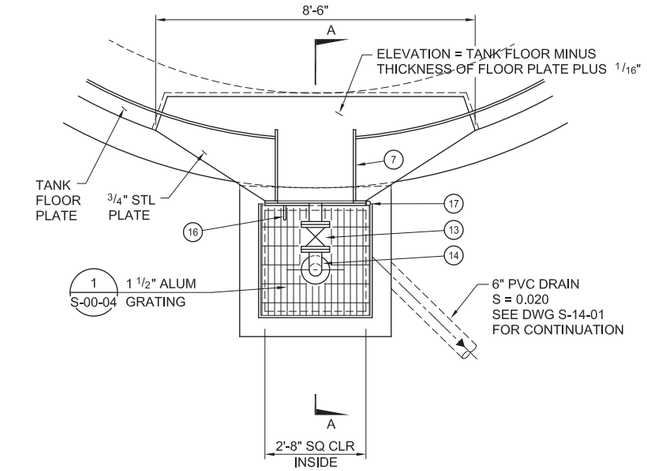

PLAN VIEW

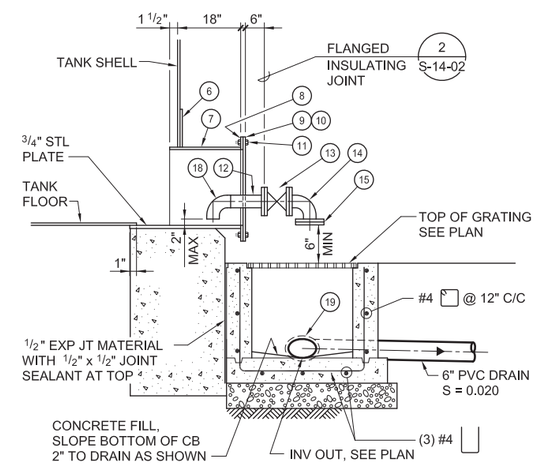

SECTION A-A

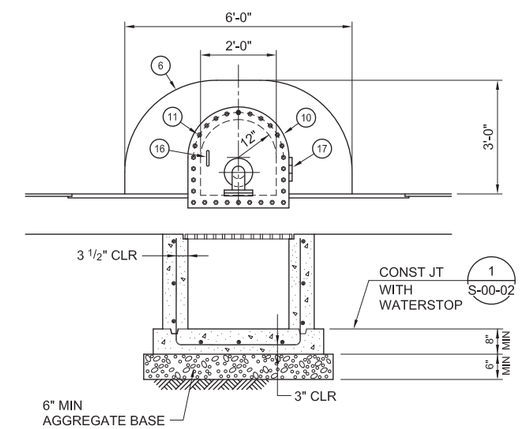

FRONT VIEW

FLUSH CLEANOUT

2 DETAIL
1/2" = 1'-0"
S-14-01
S-02-03

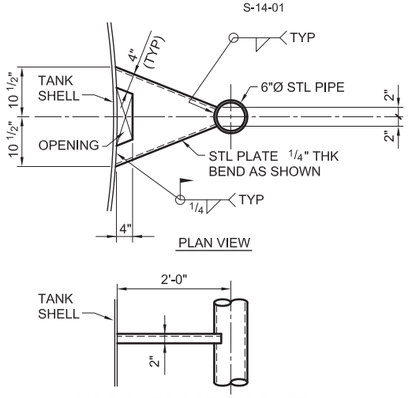

PIPE SUPPORT SIDE VIEW

3 DETAIL
3/4" = 1'-0"

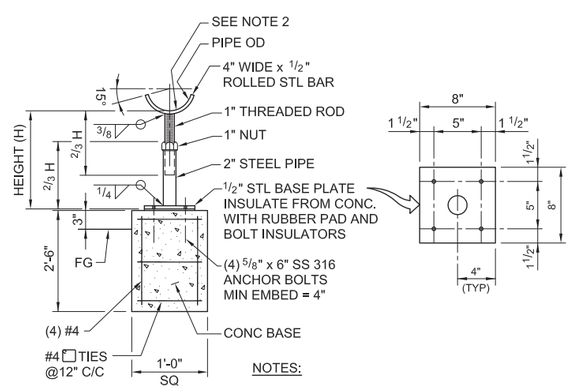

NOTES:

1. GALVANIZE ENTIRE ASSEMBLY AFTER FABRICATION.
2. PROVIDE 1/8" THK. NEOPRENE PAD BETWEEN DI PIPE AND SUPPORT.

PIPE SUPPORT - PS-1

4 DETAIL
3/4" = 1'-0"
S-14-02

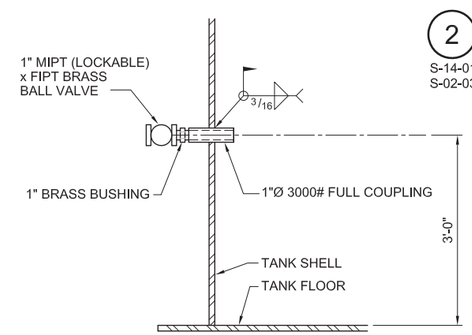

SAMPLE TAP

5 DETAIL
1-1/2" = 1'-0"
S-14-01
S-02-03

DRAFT NOT FOR CONSTRUCTION

E2 Consulting Engineers, Inc.
1900 Powell Street, Ste. 250
Emeryville, CA 94608
(510) 652-1164

CH2MHILL®

NO.	DATE	DESCRIPTION	GM/SPEC	DWN	CHKD	SUPV	APVD BY
1	9/8/14	PRE-FINAL (90%) DESIGN		WTH	KJ	VMB	VMB
0	4/5/13	INTERMEDIATE (60%) DESIGN		WTH	KJ	VMB	VMB

REVISIONS

APPROVED BY
SO
SUPV VMB
DSGN KDD
DWN WTH
CHKD KJ
OK VMB
DATE 9/8/14
SCALES AS SHOWN

TOPOCK GROUNDWATER REMEDIATION PROJECT
CONDITIONED WATER STORAGE TANK SECTIONS AND DETAILS
GAS TRANSMISSION & DISTRIBUTION
PACIFIC GAS AND ELECTRIC COMPANY
SAN FRANCISCO, CALIFORNIA

MICROFILM
BILL OF MATL
DWG LIST
SUPSDS
SUPSD BY
SHEET NO. of SHEETS
S-14-03
REV 1

PLOT DATE: $PLOTDATE PLOT TIME: $PLOTTIME
FILENAME: E2-S-XXX-1403.dwg

KEY NOTES:

1. 4 SETS, LADDER LEG FLAT BAR 3/8" x 2 1/2" x 7 3/4"
2. LADDER RUNG ROUND BAR 3/4" DIA. 16"
3. STRINGER FLAT BAR 3/8" x 2 1/2"

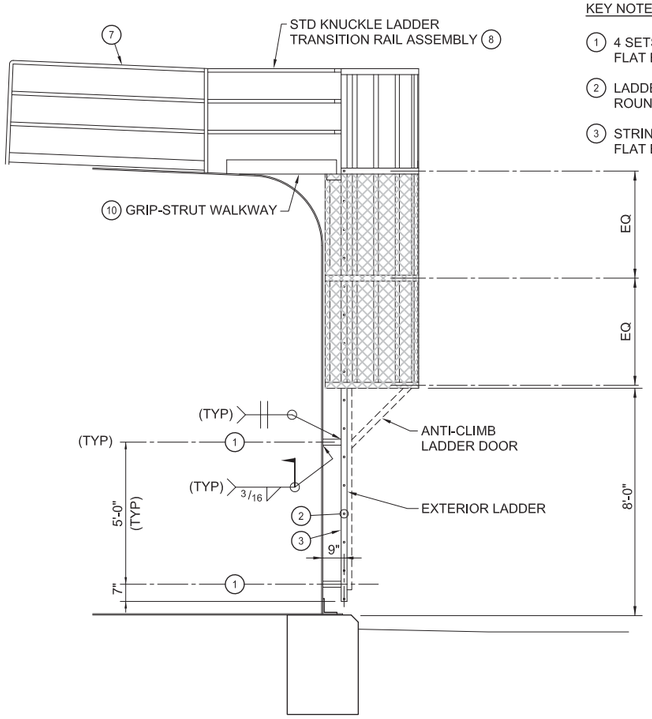

SIDE VIEW

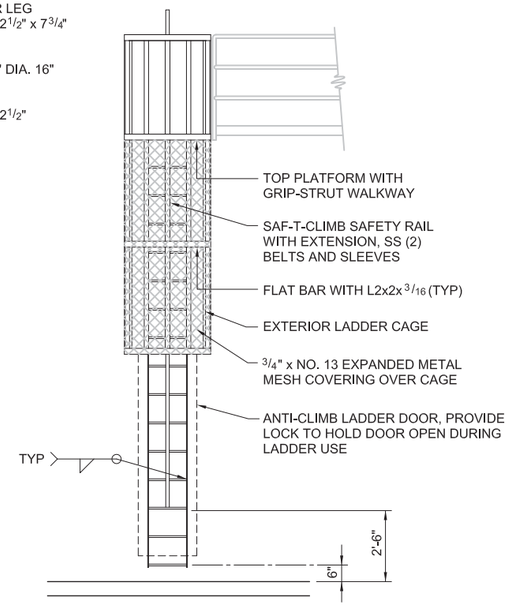

FRONT VIEW

EXTERIOR LADDER

1 DETAIL
3/8" = 1'-0"
S-14-01
S-02-03

NOTES:

1. DIMENSIONS AND DETAILS NOT SHOWN SHALL BE AS PER TANK MANUFACTURER'S APPROVED SUBMITTALS.

KEY NOTES:

4. 3 SETS, LADDER LEG, SS 316 L 3 x 3 x 1/4
5. LADDER RUNG, SS 316 ROUND BAR 3/4" DIA 16"
6. STRINGER, SS 316 FLAT BAR 3/8" x 2 1/2"

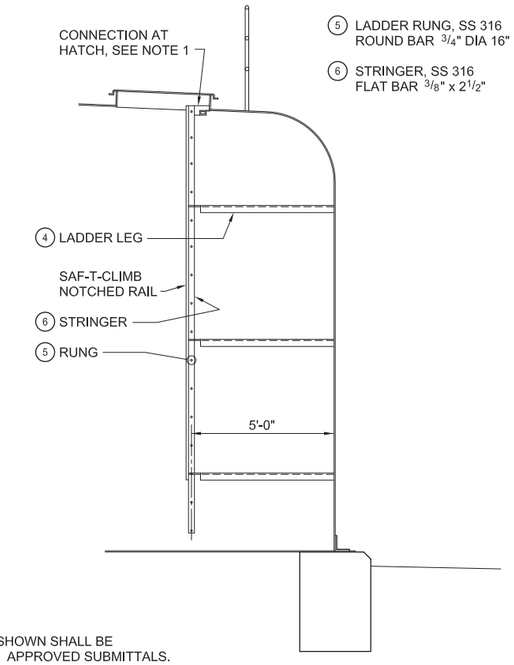

SIDE VIEW

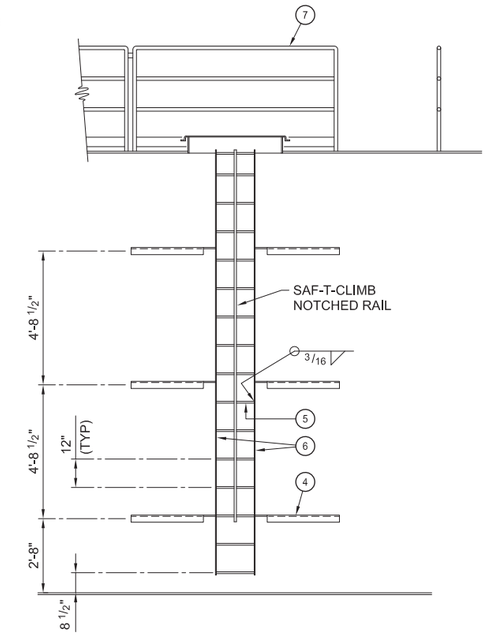

FRONT VIEW

INTERIOR LADDER

2 DETAIL
3/8" = 1'-0"
S-14-01

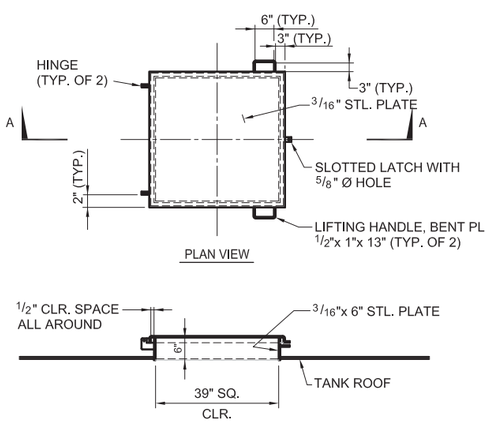

PLAN VIEW

SECTION A-A

ROOF HATCH

3 DETAIL
1/2" = 1'-0"
S-14-01

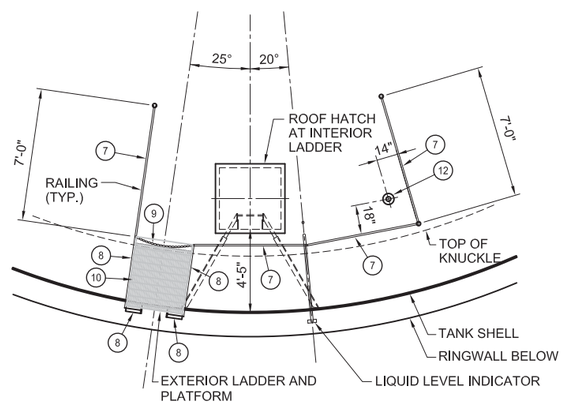

PLAN

KEY NOTES (CONT.)

7. 3'-6" HIGH 1 1/4" Ø SCH 40 PIPE HANDRAIL AND POSTS
8. STANDARD KNUCKLE LADDER TRANSITION RAIL ASSEMBLY, 1 1/4" SCH 40 PIPE
9. 3/16"x 40" CHAIN WITH 3/16" SNAP HASP AND HALF LINK OF CHAIN WELDED TO POST TO ACCEPT HASP
10. GRIPSTRUT PLATFORM 10 GA. 36"x 30" LONG WITH GRIPSTRUT ANCHORING DEVICE (FOR PLATFORMS)
11. FLAT BAR, 1/4"x 2"x 2" LONG
12. TRANSMITTER NOZZLE

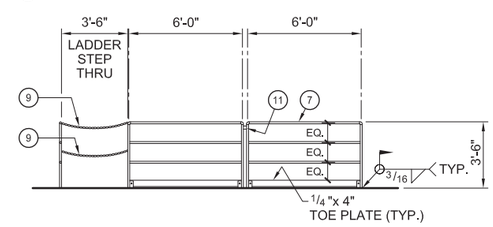

RAILING ELEVATION

TOP PLATFORM

4 DETAIL
N.T.S.
S-14-01

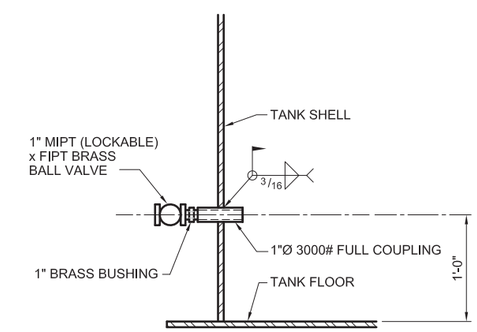

LEVEL TRANSDUCER

5 DETAIL
1-1/2" = 1'-0"
S-14-01
S-02-03

DRAFT NOT FOR CONSTRUCTION

E2 Consulting Engineers, Inc.
1900 Powell Street, Ste. 250
Emeryville, CA 94608
(510) 652-1164

CH2MHILL®

NO.	DATE	DESCRIPTION	GM/SPEC	DWN	CHKD	SUPV	APVD BY
1	9/8/14	PRE-FINAL (90%) DESIGN		WTH	KJ	VMB	VMB
0	4/5/13	INTERMEDIATE (60%) DESIGN		WTH	KJ	VMB	VMB

REVISIONS

APPROVED BY

SO	
SUPV	VMB
DSGN	KDD
DWN	WTH
CHKD	KJ
OK	VMB
DATE	9/8/14
SCALES	AS SHOWN

TOPOCK GROUNDWATER REMEDIATION PROJECT
CONDITIONED WATER STORAGE TANK SECTIONS AND DETAILS
GAS TRANSMISSION & DISTRIBUTION
PACIFIC GAS AND ELECTRIC COMPANY
SAN FRANCISCO, CALIFORNIA

MICROFILM
BILL OF MATL
DWG LIST
SUPSDS
SUPSD BY
SHEET NO. S-14-04 of SHEETS
REV 1

PLOT DATE: $PLOTDATE PLOT TIME: $PLOTTIME
FILENAME: E2-S-XXX-1404.dwg

N1808

KEY NOTES:

1. 1 1/2" TANK PRODUCTS SS 90° SHEAVE ELBOW
2. 1 1/2" SS SCH 40 PIPE NIPPLE
3. 3/64" STRANDED FLOAT CABLE SS, LENGTH AS REQ'D
4. 3/16" STRANDED FLOAT GUIDE WIRES, LENGTH AS REQUIRED
5. SS FLOAT, 12 GA x 15" DIA x 6 1/2"
6. C6x2.83 AMERICAN STANDARD CHANNEL ALUM

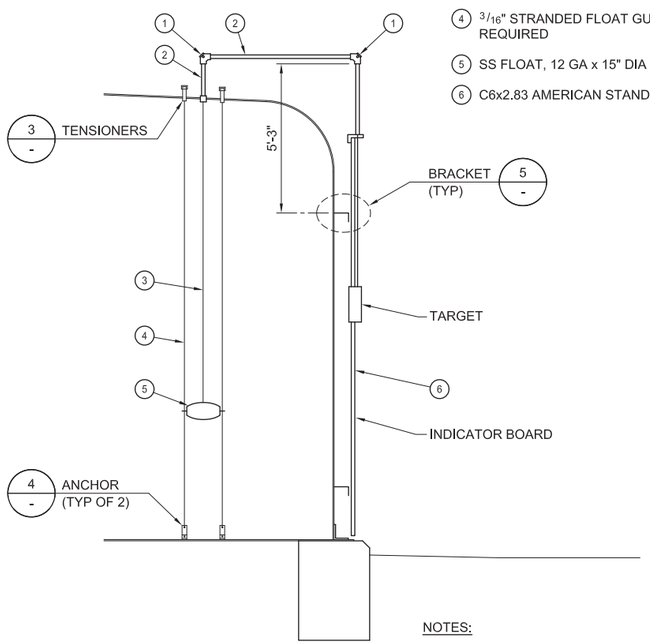

SIDE VIEW

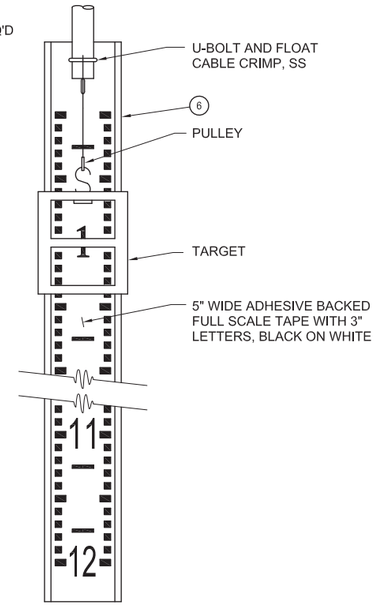

FRONT VIEW

NOTES:

1. DIMENSIONS AND DETAILS NOT SHOWN SHALL BE AS PER TANK MANUFACTURER'S APPROVED SUBMITTALS.
2. ALL STAINLESS STEEL SHALL BE SS 316.

LIQUID LEVEL INDICATOR (HALF SCALE LEVEL GAUGE)

1 DETAIL

3/8" = 1'-0"

S-14-01
S-02-03

KEY NOTES:

16. FLAT BAR SS 316 3/8"x 28" LONG
17. FLAT BAR SS 316 3/8"x 45" LONG
18. ANGLE SS 316, 3"x 3"x 3/8"x 2" LONG WITH: BOLT SS 316, 1/2"-13 NC x 1 1/2" LONG WITH NYLOCK NUT AND WASHER
19. EYEBOLT SS 316, 3/8"x 12" WITH (2) NUTS
20. HALF RING SS 316, 5/16"x 2 1/4"
21. ROUND BAR STL, 3/4" DIA x LENGTH AS REQ'D WITH 3" NC TOE
22. 40 x 32 FLARED AND DISHED STL PLATE HEAD, 3/8"x 32" DISH RADIUS, 4" FLANGE
23. C RING GASKET, 1/4"x 35" ID 60 DURO-HARD
24. STL PLATE, 1"x 8 1/2"x 9'-8 1/4" LONG ROLLED TO 36" ID
25. STL PLATE, 7/16"x 59 1/2" OD x SHOP TRACE ID (ITEM NO. 9 OD)
26. PIPE SS 304, 3/4"x STD WT x 3" LONG
27. STL TUBE STRUCT, 3"x 3"x 1/4"x 39" LONG
28. STL TUBE SQ, 2 1/2"x 2 1/2"x 3/16"x 3" LONG WITH 7/16"Ø HOLES
29. BRONZE NUT, 3/4" HEAVY HEX AND WASHER
30. STL FLAT BAR, 2 1/2"x 1/4"x 2 1/2" LONG

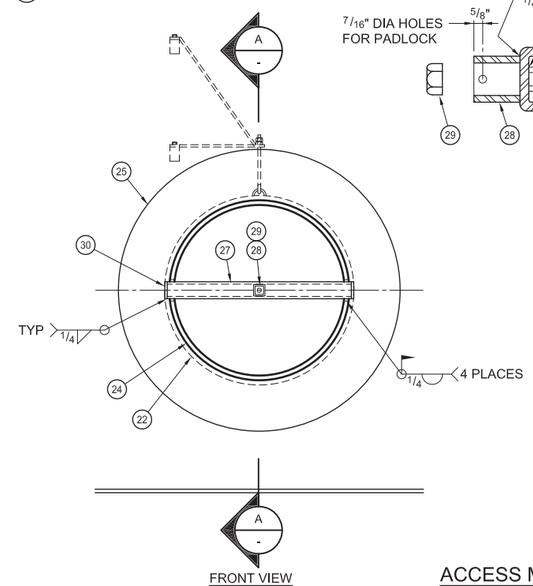

ACCESS MANWAY

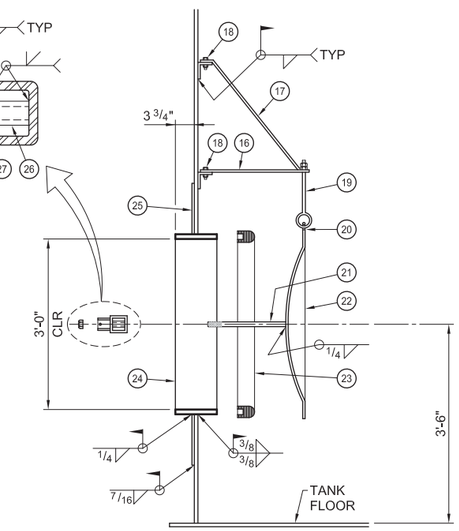

SECTION A-A

2 DETAIL

3/4" = 1'-0"

S-14-01
S-02-03

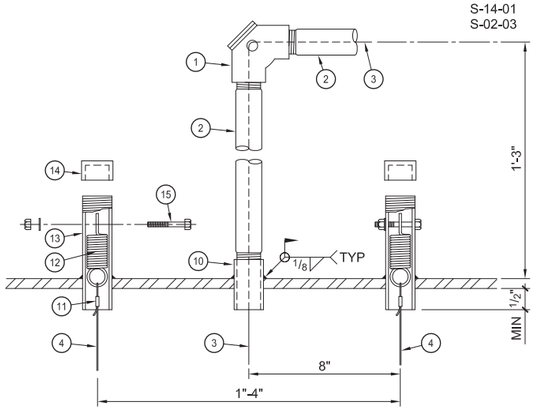

3 DETAIL - TENSIONERS

3" = 1'-0"

KEY NOTES:

7. SS FLAT BAR, 1/4" x 1 1/2 " x 3 1/2" LONG
8. A36 FLAT BAR, 1/4" x 1 1/2" x 2" LONG
9. ISOLATION KIT WITH 1/2" x 1 1/2" BOLT AND NUT, SS/NYLON
10. 1 1/2" x 150# SS HALF COUPLING
11. SS CABLE CRIMP, (2) REQUIRED
12. 1" OD x 3 1/2" x .105 SS EXTENSION SPRING (2) REQUIRED
13. 1 1/4" SS SCH 40 PIPE x 6" LONG (2) REQUIRED)
14. 1 1/4" x 150# SS THREADED PIPE CAP (2) REQUIRED
15. SS BOLT AND NUT 1/4" x 2" LONG WITH LOCK WASHER, (2) REQUIRED

NOTES:

1. ALL STAINLESS STEEL SHALL BE SS 316.

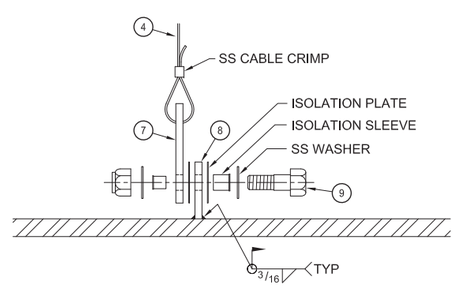

4 DETAIL - ANCHOR

3" = 1'-0"

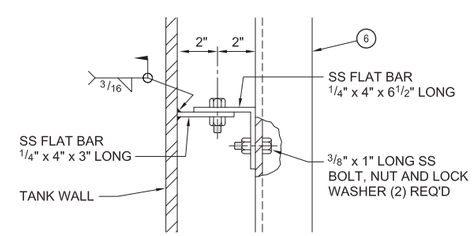

5 DETAIL - BRACKET

3" = 1'-0"

DRAFT
NOT FOR
CONSTRUCTION

E2 Consulting Engineers, Inc.
1900 Powell Street, Ste. 250
Emeryville, CA 94608
(510) 652-1164

CH2MHILL®

NO.	DATE	DESCRIPTION	GM/SPEC	DWN	CHKD	SUPV	APVD BY
1	9/8/14	PRE-FINAL (90%) DESIGN		WTH	KJ	VMB	VMB
0	4/5/13	INTERMEDIATE (60%) DESIGN		WTH	KJ	VMB	VMB

REVISIONS

APPROVED BY
SO
SUPV VMB
DSGN KDD
DWN WTH
CHKD KJ
OK VMB
DATE 9/8/14
SCALES AS SHOWN

TOPOCK GROUNDWATER REMEDIATION PROJECT
CONDITIONED WATER STORAGE TANK SECTIONS AND DETAILS
GAS TRANSMISSION & DISTRIBUTION
PACIFIC GAS AND ELECTRIC COMPANY
SAN FRANCISCO, CALIFORNIA

MICROFILM
BILL OF MATL
DWG LIST
SUPSDS
SUPSD BY
SHEET NO. of SHEETS
S-14-05
REV 1

PLOT DATE: $PLOTDATE PLOT TIME: $PLOTTIME
FILENAME: E2-S-XXX-1405.dwg

N1808

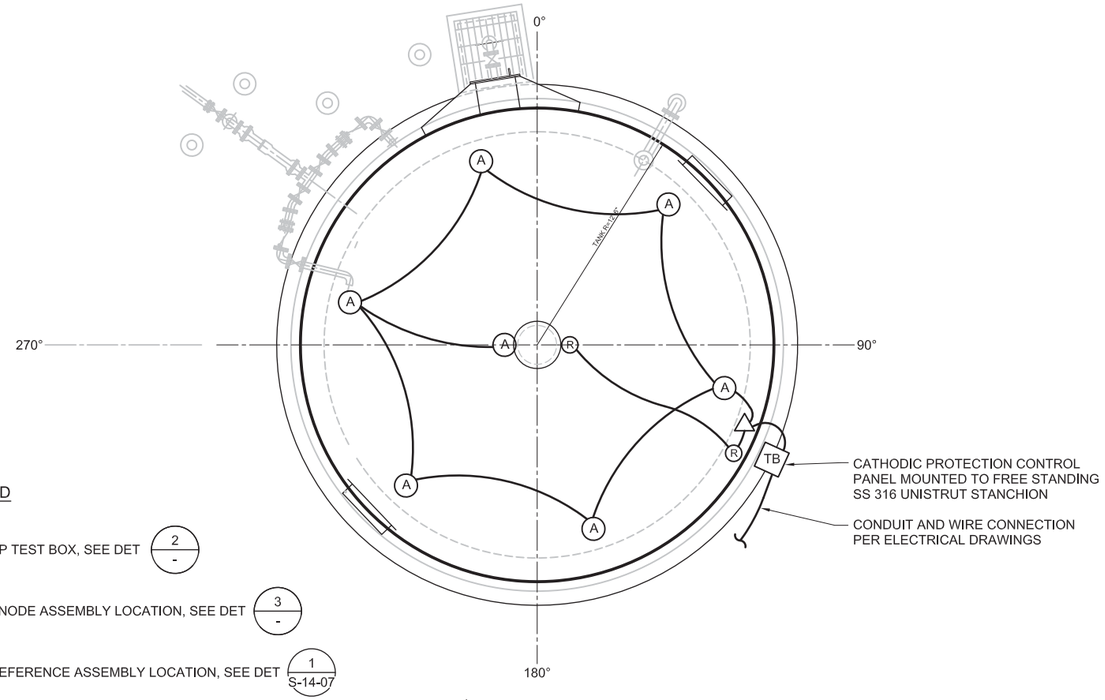

LEGEND

- TB — CP TEST BOX, SEE DET 2/-
- A — ANODE ASSEMBLY LOCATION, SEE DET 3/-
- R — REFERENCE ASSEMBLY LOCATION, SEE DET 1/S-14-07
- △ — WIRE AND CONDUIT ENTRANCE ASSEMBLY 2/S-14-07

PLAN

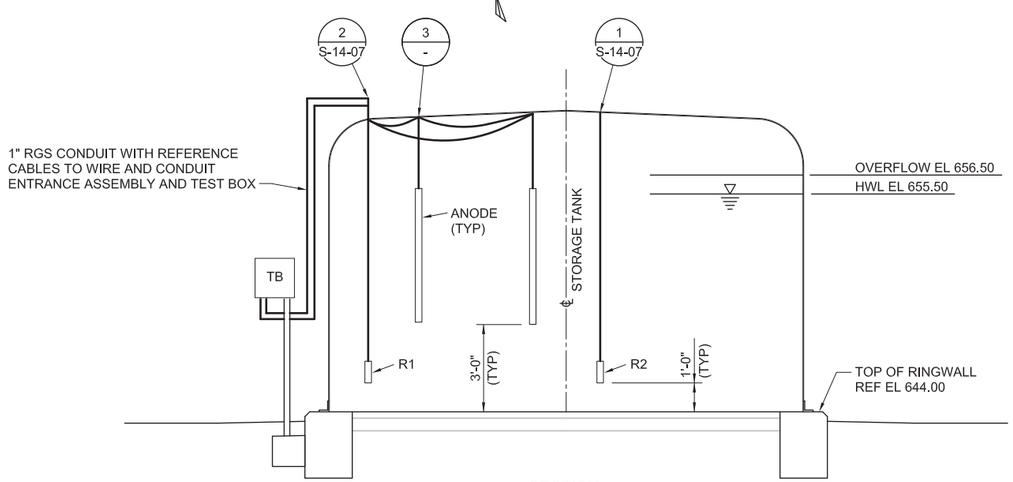

SECTION

CATHODIC PROTECTION

1 DETAIL
1/4" = 1'-0"

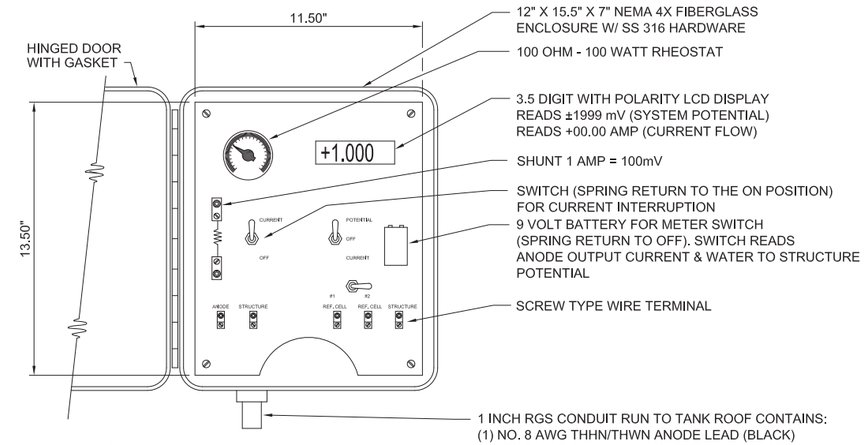

NOTES:

1. CABINET IS NEMA 4X FIBERGLASS WITH STAINLESS STEEL HINGE AND LATCH SUITABLE FOR PADLOCK.
2. FOR TEST BOX INSTALLATION SEE DETAIL 3, DWG S-14-07.

TEST BOX

2 DETAIL
NTS

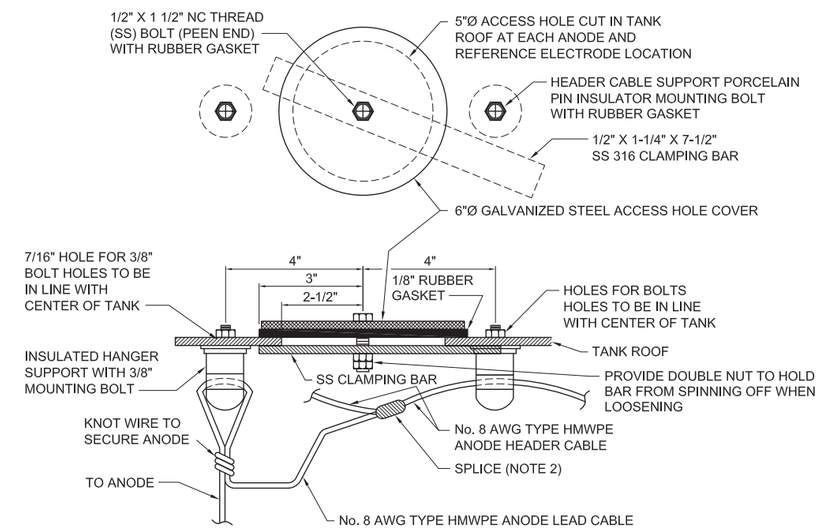

NOTES:

1. 5"Ø HANDHOLES AND TEST HOLES CUT, GROUND SMOOTH AND COATED.
2. COPPER ALLOY C-TAP CRIMP CONNECTOR, COVER CONNECTION WITH (2) LAYERS OF HALF-LAPPED RUBBER SEALING TAPE AND (2) LAYERS OF HALF LAPPED VINYL ELECTRIC TAPE.
3. ALL HARDWARE SHALL BE SS 316.

ANODE SUPPORT HANGER AND HANDHOLE ASSEMBLY

3 DETAIL
NTS

DRAFT NOT FOR CONSTRUCTION

E2 Consulting Engineers, Inc.
1900 Powell Street, Ste. 250
Emeryville, CA 94608
(510) 652-1164

CH2MHILL®

NO.	DATE	DESCRIPTION	GM/SPEC	DWN	CHKD	SUPV	APVD	BY
1	9/8/14	PRE-FINAL (90%) DESIGN		WTH	KJ	VMB	VMB	
0	4/5/13	INTERMEDIATE (60%) DESIGN		WTH	KJ	VMB	VMB	

REVISIONS

APPROVED BY: SO
SUPV VMB
DSGN KDD
DWN WTH
CHKD KJ
OK VMB
DATE 9/8/14
SCALES AS SHOWN

TOPOCK GROUNDWATER REMEDIATION PROJECT
CONDITIONED WATER STORAGE TANK CATHODIC PROTECTION
GAS TRANSMISSION & DISTRIBUTION
PACIFIC GAS AND ELECTRIC COMPANY
SAN FRANCISCO, CALIFORNIA

MICROFILM
BILL OF MATL
DWG LIST
SUPSDS
SUPSD BY
SHEET NO. S-14-06 of SHEETS
REV 1

FILENAME: E2-S-XXX-1406.dwg
PLOT DATE: $PLOTDATE PLOT TIME: $PLOTTIME
N1808

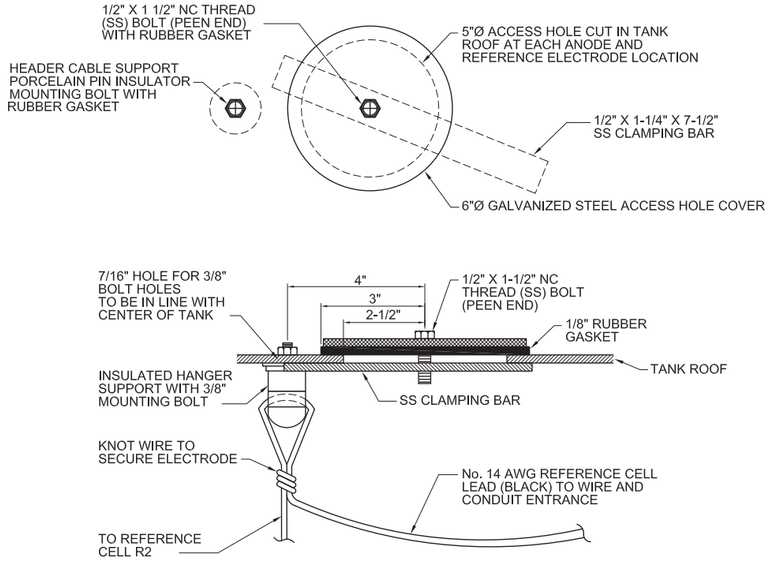

NOTES:

1. 5"Ø HANDHOLES AND TEST HOLES CUT, GROUND SMOOTH AND COATED.
2. ALL HARDWARE SHALL BE SS 316.

REFERENCE ELECTRODE SUPPORT HANGER ASSEMBLY

1 DETAIL
NTS
S-14-06

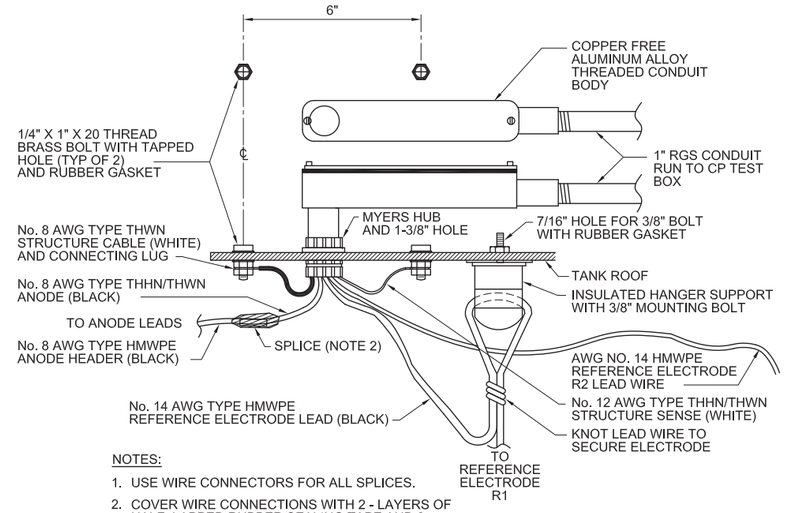

NOTES:

1. USE WIRE CONNECTORS FOR ALL SPLICES.
2. COVER WIRE CONNECTIONS WITH 2 - LAYERS OF HALF LAPPED RUBBER SEALING TAPE AND 2 - LAYERS OF HALF LAPPED VINYL ELECTRIC TAPE.
3. PROVIDE 1-3/8" HOLE FOR MYERS HUB.
4. PROVIDE A HANDHOLE AND COVER AT EACH REFERENCE ELECTRODE HANGER AS PER DETAIL 1, DWG M-8.
5. ALL HARDWARE SHALL BE SS 316 WITH RUBBER GASKETS AS REUIRED.

WIRE AND CONDUIT ENTRANCE ASSEMLY

2 DETAIL
NTS
S-14-06

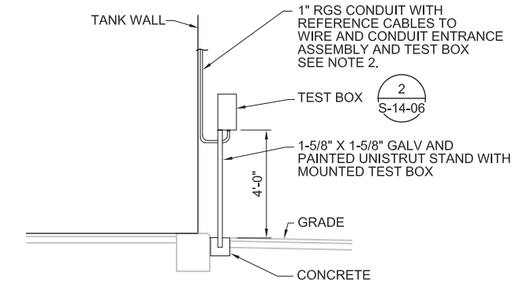

NOTES:

1. TEST BOX SHALL BE LOCATED ON SOUTH SIDE OF THE LIGHT POLE AND FREE OF OBSTRUCTION A MINIMUM OF 20" ON EACH SIDE OF BOX.
2. LADDER STAND-OFFS USED TO SUPPORT CONDUIT TO TANK ROOF.
3. UNISTRUT TO BE PLACED IN 18" SQ x 18" DEEP CONCRETE.

TEST BOX INSTALLATION

3 DETAIL
NTS
S-14-06

DRAFT
NOT FOR
CONSTRUCTION

E2 Consulting Engineers, Inc.
1900 Powell Street, Ste. 250
Emeryville, CA 94608
(510) 652-1164

CH2MHILL®

NO.	DATE	DESCRIPTION	GM/SPEC	DWN	CHKD	SUPV	APVD BY
1	9/8/14	PRE-FINAL (90%) DESIGN		WTH	KJ	VMB	VMB
0	4/5/13	INTERMEDIATE (60%) DESIGN		WTH	KJ	VMB	VMB

REVISIONS

APPROVED BY
SO
SUPV VMB
DSGN KDD
DWN WTH
CHKD KJ
OK VMB
DATE 9/8/14
SCALES AS SHOWN

TOPOCK GROUNDWATER REMEDIATION PROJECT
CONDITIONED WATER STORAGE TANK CATHODIC PROTECTION
GAS TRANSMISSION & DISTRIBUTION
PACIFIC GAS AND ELECTRIC COMPANY
SAN FRANCISCO, CALIFORNIA

MICROFILM
BILL OF MATL
DWG LIST
SUPSDS
SUPSD BY
SHEET NO. of SHEETS
S-14-07
REV 1

PLOT DATE: $PLOTDATE PLOT TIME: $PLOTTIME
FILENAME: E2-S-XXX-1407.dwg

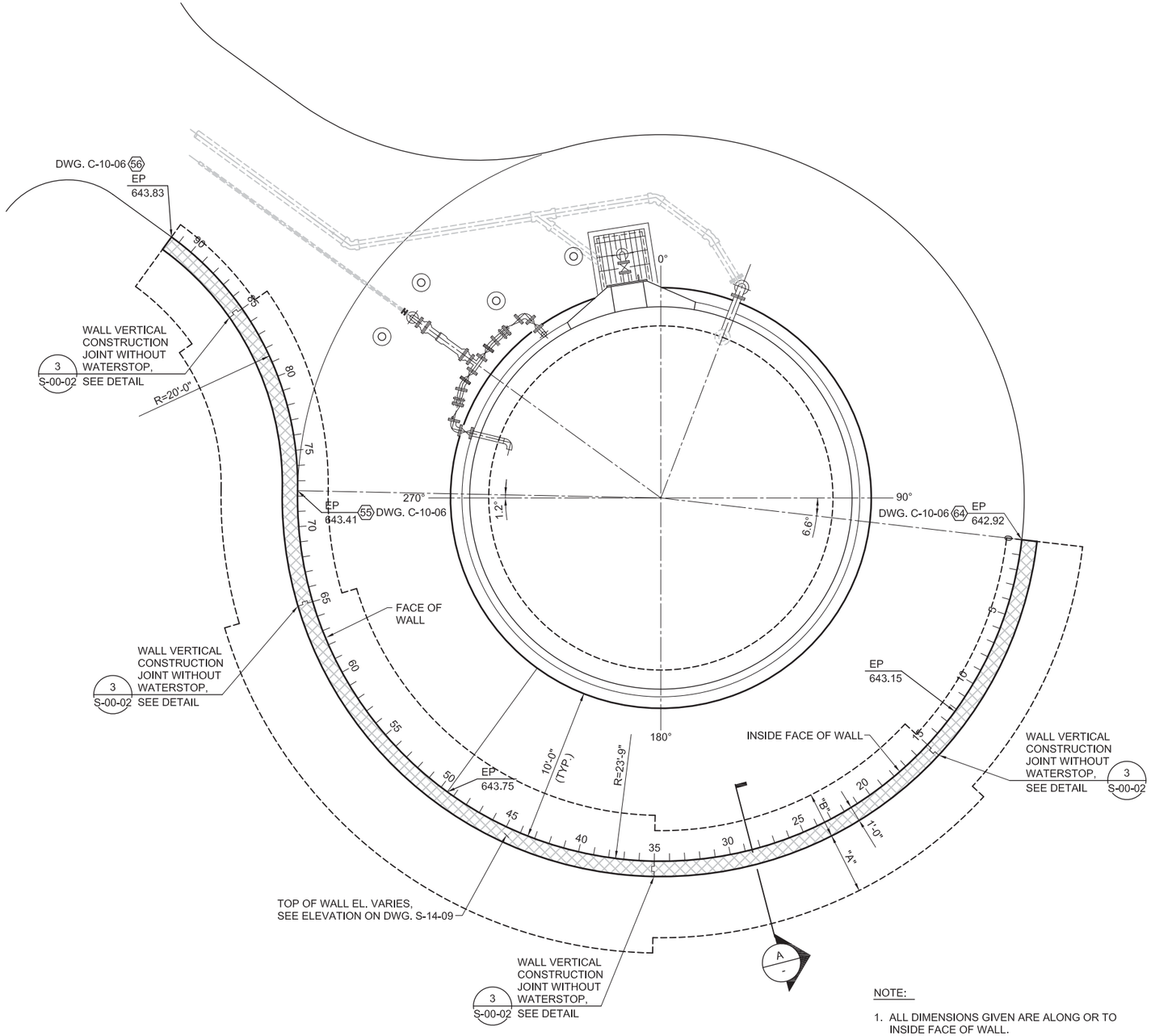

1 TANK RETAINING WALL PLAN
1/4" = 1'-0"
S-14-01
C-10-06

NOTE:

1. ALL DIMENSIONS GIVEN ARE ALONG OR TO INSIDE FACE OF WALL.

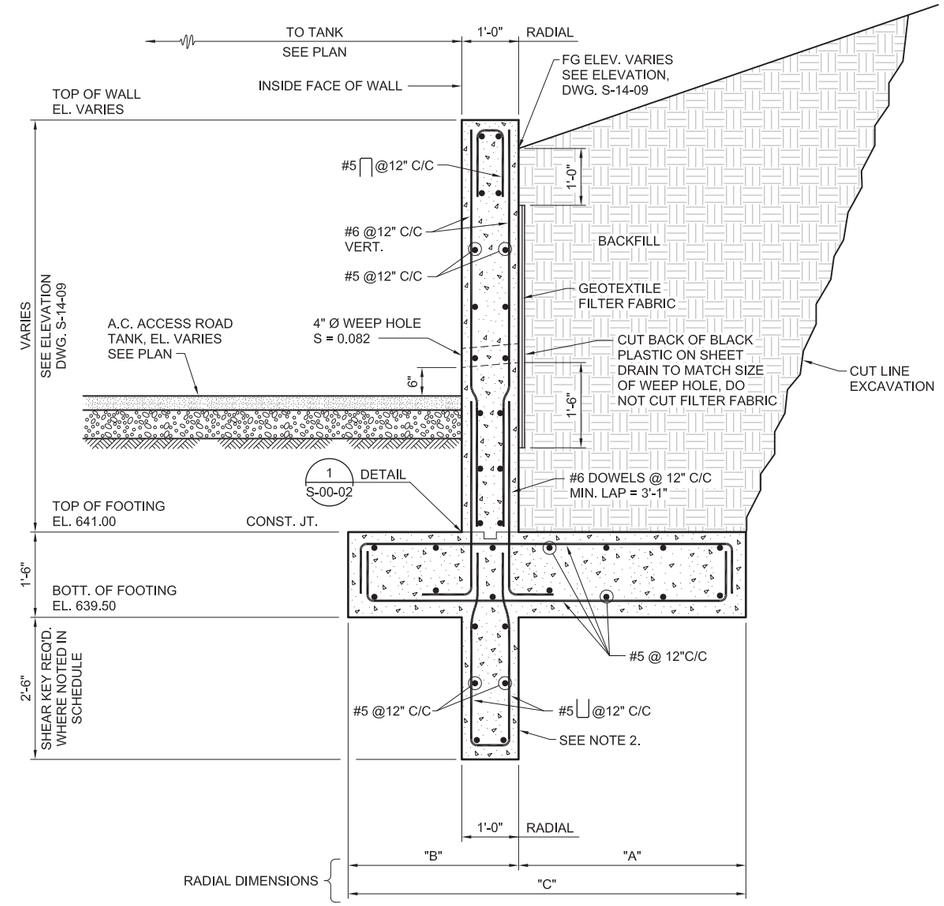

A SECTION
3/4" = 1'-0"
S-14-09

NOTES:

1. FOR GENERAL STRUCTURAL NOTES SEE DWG. S-00-01.
2. SHEAR KEY TO BE POURED WITH FOOTING (NO CONSTRUCTION JOINT).

SCHEDULE				
STATION	DIM. "A"	DIM. "B"	DIM. "C"	KEY
0 TO 5	3'-0"	2'-0"	5'-0"	NO
5 TO 15	3'-0"	2'-0"	5'-0"	YES
15 TO 35	4'-0"	3'-0"	7'-0"	YES
35 TO 65	5'-0"	4'-0"	9'-0"	YES
65 TO 85	4'-0"	3'-0"	7'-0"	YES
85 TO 92	3'-0"	2'-0"	5'-0"	NO

DRAFT
NOT FOR
CONSTRUCTION

E2 Consulting Engineers, Inc.
1900 Powell Street, Ste. 250
Emeryville, CA 94608
(510) 652-1164

CH2MHILL®

NO.	DATE	DESCRIPTION	GM/SPEC	DWN	CHKD	SUPV	APVD BY
0	9/8/14	PRE-FINAL (90%) DESIGN		WTH	KDD	VMB	VMB

REVISIONS

APPROVED BY
SO
SUPV VMB
DSGN KDD
DWN WTH
CHKD KDD
OK VMB
DATE 9/8/14
SCALES AS SHOWN

TOPOCK GROUNDWATER REMEDIATION PROJECT
CONDITIONED WATER STORAGE TANK RETAINING WALL PLAN AND SECTIONS
GAS TRANSMISSION & DISTRIBUTION
PACIFIC GAS AND ELECTRIC COMPANY
SAN FRANCISCO, CALIFORNIA

MICROFILM
BILL OF MATL
DWG LIST
SUPSDS
SUPSD BY
SHEET NO. of SHEETS
S-14-08
REV 0

PLOT DATE: $PLOTDATE PLOT TIME: $PLOTTIME
FILENAME: E2-S-XXX-1408

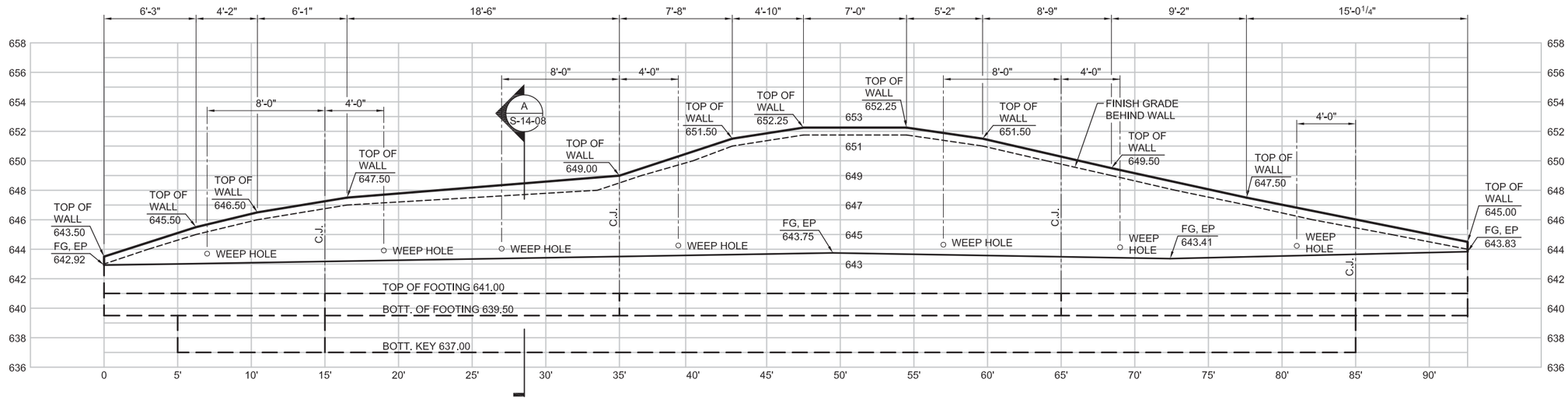

NOTES:

1. DIMENSIONS MEASURED ALONG THE INSIDE FACE OF WALL.

(A) TANK RETAINING WALL DEVELOPED ELEVATION - INSIDE FACE OF WALL

1/4" = 1'-0"

S-14-08

DRAFT
NOT FOR
CONSTRUCTION

E2 Consulting Engineers, Inc.
1900 Powell Street, Ste. 250
Emeryville, CA 94608
(510) 652-1164

CH2MHILL®

NO.	DATE	DESCRIPTION	GM/SPEC	DWN	CHKD	SUPV	APVD BY
0	9/8/14	PRE-FINAL (90%) DESIGN		WTH	KDD	VMB	VMB

REVISIONS

APPROVED BY
SO
SUPV VMB
DSGN KDD
DWN WTH
CHKD KDD
OK VMB
DATE 9/8/14
SCALES AS SHOWN

TOPOCK GROUNDWATER REMEDIATION PROJECT
CONDITIONED WATER
STORAGE TANK RETAINING WALL
ELEVATION
GAS TRANSMISSION & DISTRIBUTION
PACIFIC GAS AND ELECTRIC COMPANY
SAN FRANCISCO, CALIFORNIA

MICROFILM
BILL OF MATL
DWG LIST
SUPSDS
SUPSD BY
SHEET NO. S-14-09 of SHEETS
REV 0

FILENAME: E2-S-XXX-1409
PLOT DATE: $PLOTDATE PLOT TIME: $PLOTTIME

N1808

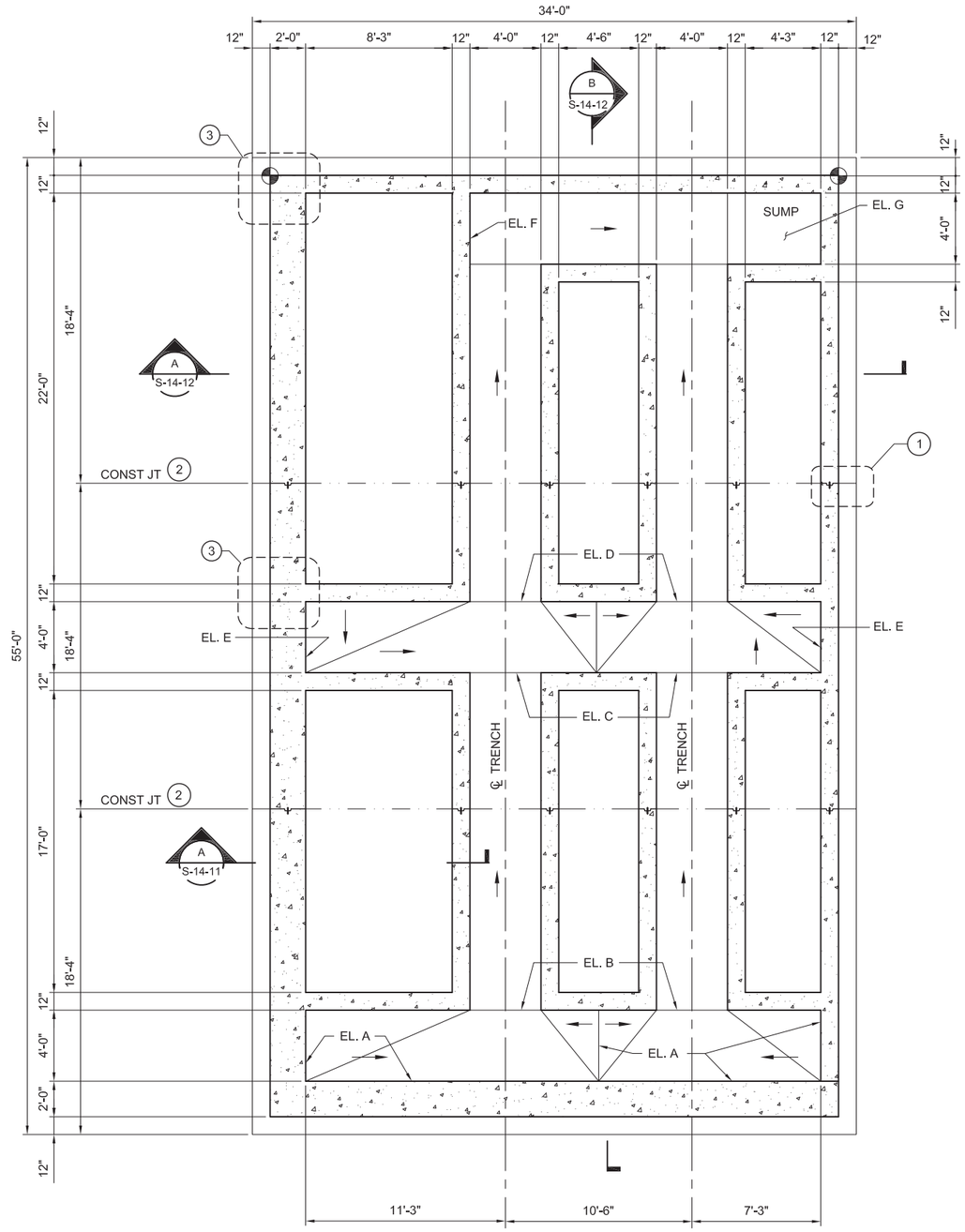

FOUNDATION PLAN

1/4" = 1'-0"

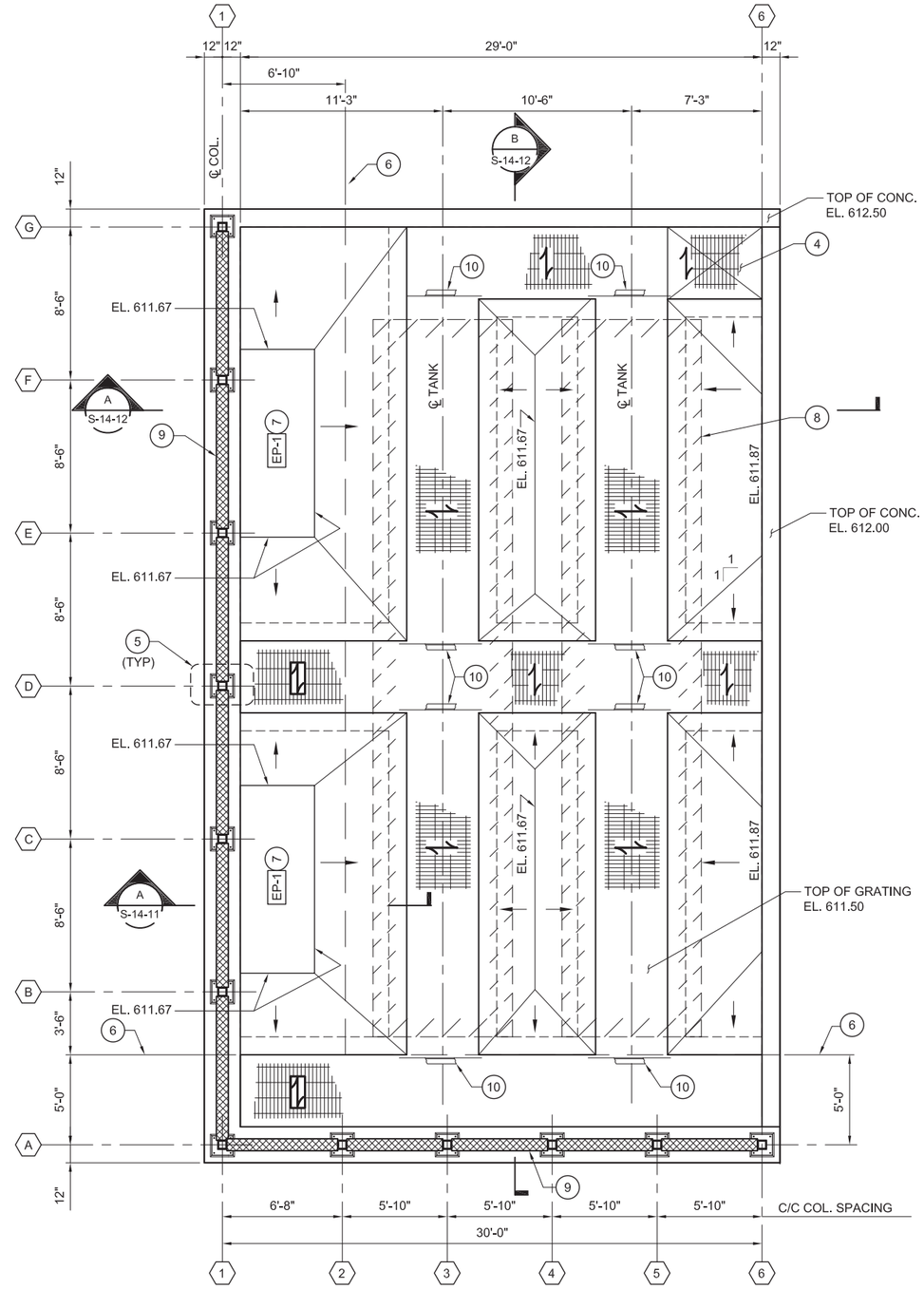

FLOOR PLAN

1/4" = 1'-0"

KEY NOTES:

1. WALL VERTICAL CONSTRUCTION JOINT WITH PVC WATERSTOP. SEE DETAIL 3 ON S-00-02.
2. FOUNDATION CONSTRUCTION JOINT WITH PVC WATERSTOP . SEE DETAIL 2 ON S-00-02.
3. DOUBLE REINFORCING WALL DETAIL. SEE DETAIL 5 ON S-00-02.
4. REMOVABLE GRATING OVER SUMP.
5. CANOPY COLUMN BASE PLATE. SEE DETAIL 5 ON S-14-13.
6. EDGE OF CANOPY ROOF.
7. EP-1 12" HIGH EQUIPMENT PAD UNLESS NOTED OTHERWISE. SEE DETAIL 9 ON DWG S-00-02. EP PAD SIZE PER MANUFACTURER'S APPROVED SUBMITTALS.
8. INDICATES OUTLINE OF TANK. SEE MECHANICAL DRAWINGS.
9. 8" REINFORCED CONCRETE MASONRY WALL.
10. GRATING SUPPORT, SEE DETAIL 2 ON DWG. S-00-04.

NOTES:

1. FOR GENERAL STRUCTURAL NOTES, SEE S-00-01.
2. FOR COORDINATES, SEE DWG. C-10-05.

TABLE OF ELEVATIONS	
A	605.50
B	605.42
C	605.25
D	605.17
E	605.21
F	605.00
G	604.83

DRAFT
NOT FOR
CONSTRUCTION

E2 Consulting Engineers, Inc.
1900 Powell Street, Ste. 250
Emeryville, CA 94608
(510) 652-1164

CH2MHILL®

NO.	DATE	DESCRIPTION	GM/SPEC	DWN	CHKD	SUPV	APVD BY
1	09/08/14	PRE-FINAL (90%) DESIGN		MD	KJ	VMB	VMB
0	04/05/13	INTERMEDIATE (60%) DEISGN		MD	KJ	VMB	VMB

REVISIONS

APPROVED BY
SO
SUPV VMB
DSGN KDD
DWN MD
CHKD KJ
OK VMB
DATE 6/30/14
SCALES 1/4"=1'-0"

TOPOCK GROUNDWATER REMEDIATION PROJECT
CONDITIONED WATER STORAGE TANK FARM
FOUNDATION AND FLOOR PLANS
GAS TRANSMISSION & DISTRIBUTION
PACIFIC GAS AND ELECTRIC COMPANY
SAN FRANCISCO, CALIFORNIA

MICROFILM
BILL OF MATL
DWG LIST
SUPSDS
SUPSD BY
SHEET NO. of SHEETS
S-14-10
REV 1

FILENAME: E2-S-XXX-1408AD.dwg
PLOT DATE: $PLOTDATE PLOT TIME: $PLOTTIME

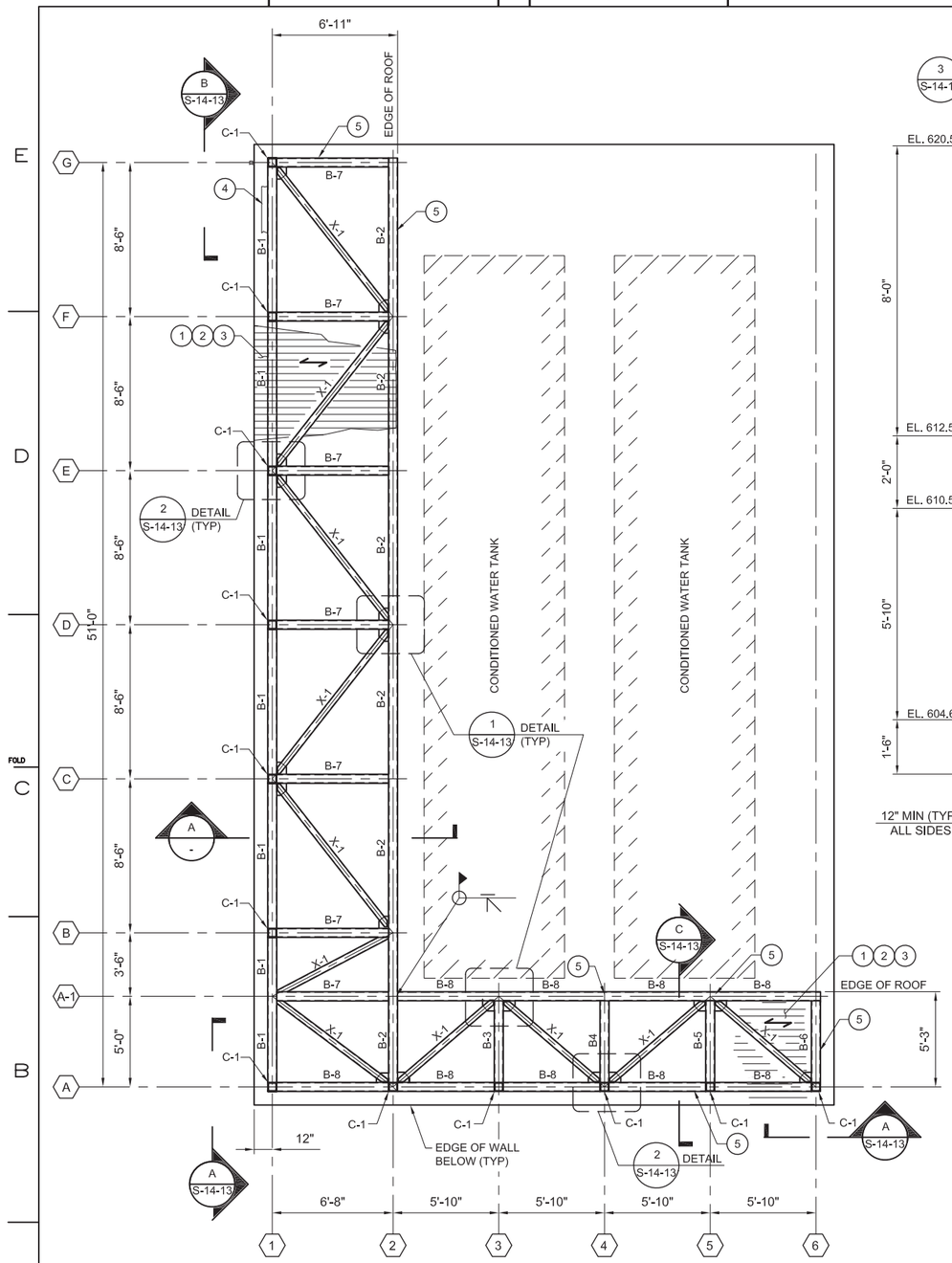

CANOPY - ROOF PLAN

1/4" = 1'-0"

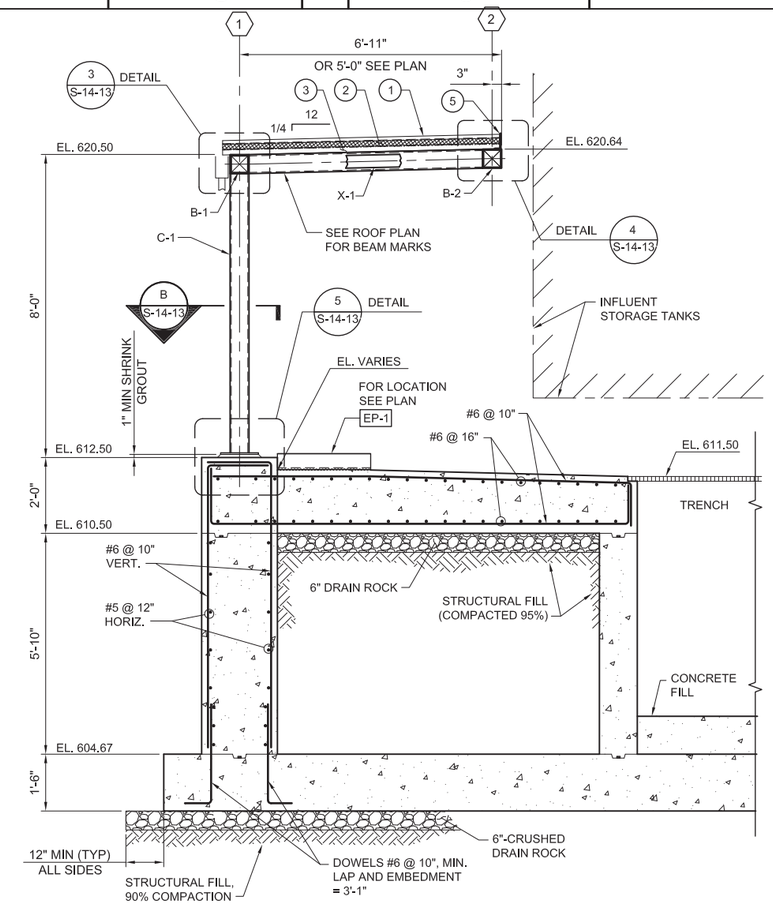

@ COLUMN (MASONRY WALL NOT SHOWN)

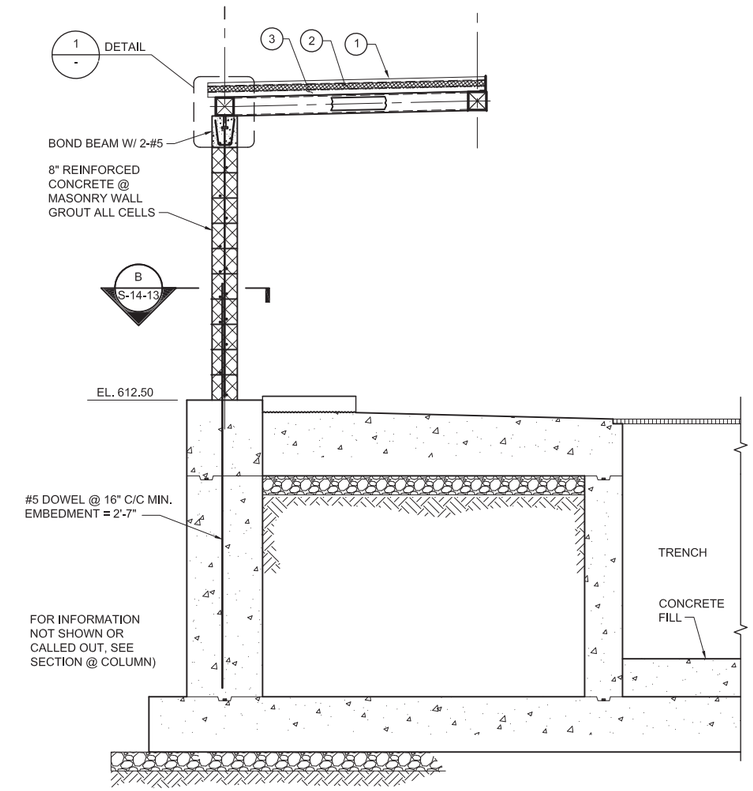

@ MASONRY WALL (COLUMN NOT SHOWN)

A SECTION

1/2" = 1'-0"

S-14-10, S-14-12

STEEL BEAM SCHEDULE				
MARK	SIZE	WALL "T"	ELEV. TOP OF BEAM COLUMN	REMARK
B-1	HSS 6x6	3/8	620.50	
B-2	HSS 6x6	3/8	620.64	
B-3	HSS 6x6	3/8	620.76	
B-4	HSS 6x6	3/8	620.88	
B-5	HSS 6x6	3/8	621.00	
B-6	HSS 6x6	3/8	621.13	
B-7	HSS 6x6	3/8	VARIES	
B-8	HSS 6x6	3/8	VARIES	
X-1	HSS 4x4	1/4	VARIES	X-BRACING
C-1	HSS 6x6	3/8	-	COLUMNS

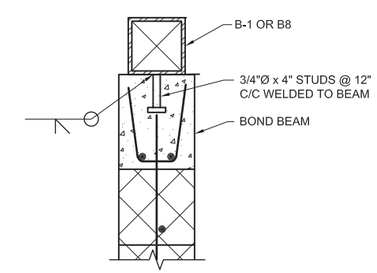

1 DETAIL

1 1/2" = 1'-0"

KEY NOTES:

1. 1 1/2" STANDING SEAM METAL ROOF PANEL.
2. 2" RIGID INSULATION
3. 1 1/2" ROOF DECK (SEE DWG S-00-01)
4. GUTTER AND DOWNSPOUT. SEE ARCHITECTURAL DRAWINGS FOR DETAILS.
5. CLOSURE ANGLE.

NOTES:

1. FOR ADDITIONAL DETAILS, SEE ARCHITECTURAL DWGS.

DRAFT
NOT FOR
CONSTRUCTION

E2 Consulting Engineers, Inc.
1900 Powell Street, Ste. 250
Emeryville, CA 94608
(510) 652-1164

CH2MHILL®

NO.	DATE	DESCRIPTION	GM/SPEC	DWN	CHKD	SUPV	APVD BY
1	09/08/14	PRE-FINAL (90%) DESIGN		MD	KJ	VMB	VMB
0	04/05/13	INTERMEDIATE (60%) DESIGN		MD	KJ	VMB	VMB

REVISIONS

APPROVED BY: ISO; SUPV VMB; DSGN KDD; DWN MD; CHKD KJ; OK VMB; DATE 6/30/14; SCALES AS NOTED

TOPOCK GROUNDWATER REMEDIATION PROJECT
CONDITIONED WATER STORAGE TANK FARM
CANOPY PLAN AND SECTIONS
GAS TRANSMISSION & DISTRIBUTION
PACIFIC GAS AND ELECTRIC COMPANY
SAN FRANCISCO, CALIFORNIA

MICROFILM
BILL OF MATL
DWG LIST
SUPSDS
SUPSD BY
SHEET NO. of SHEETS: S-14-11
REV 1

PLOT DATE: $PLOTDATE PLOT TIME: $PLOTTIME
FILENAME: E2-S-XXX-1408AD.dwg

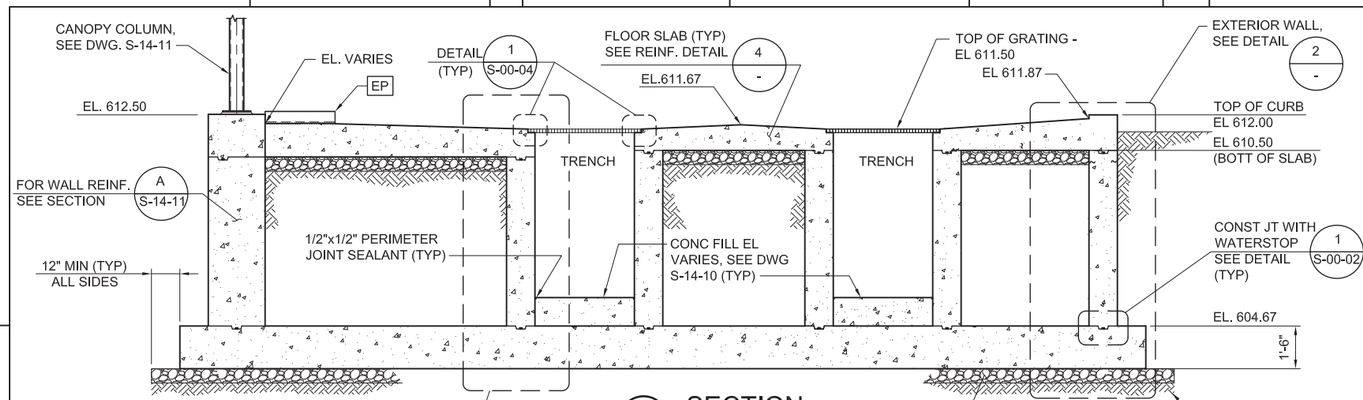

A SECTION
3/8" =1'-0"
S-14-10

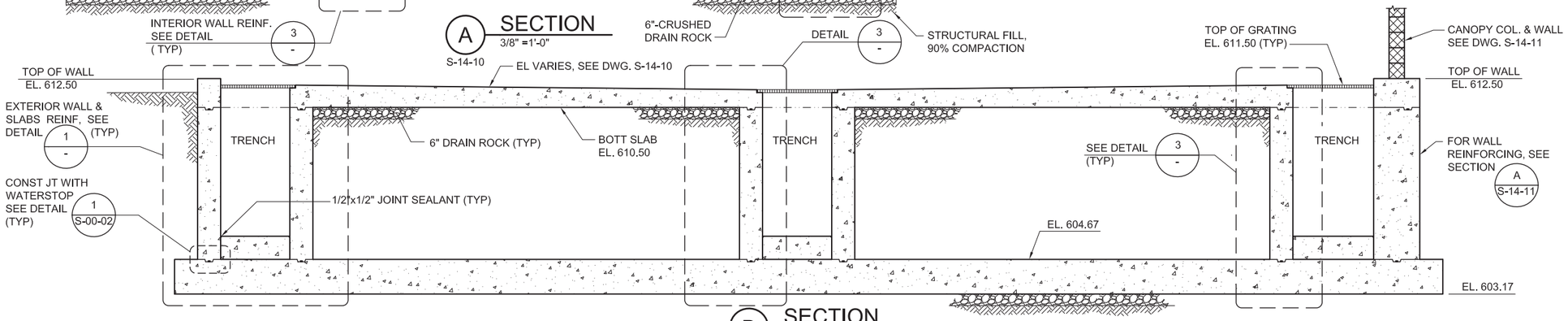

B SECTION
3/8" = 1'-0"
S-14-10

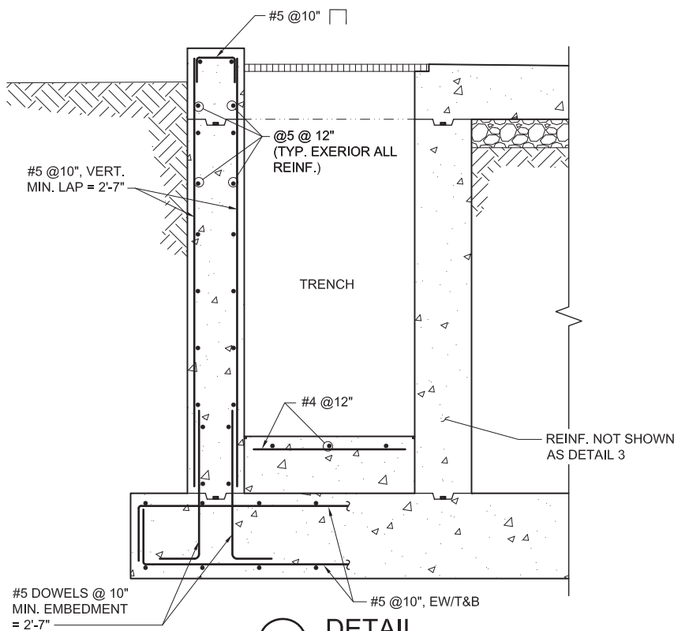

1 DETAIL
3/4" = 1'-0"
-

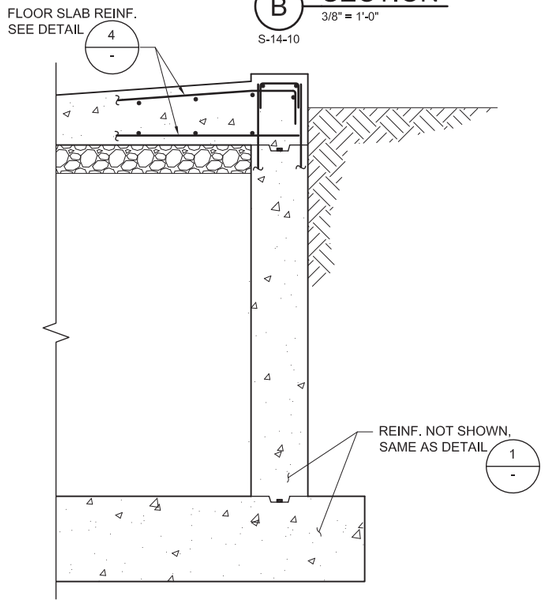

2 DETAIL
3/4" = 1'-0"
-

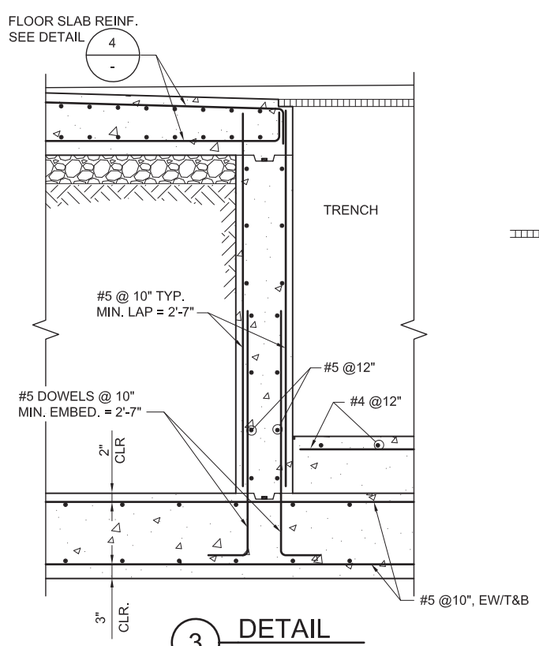

3 DETAIL
3/4" = 1'-0"
-

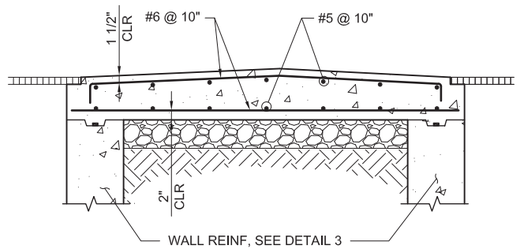

4 DETAIL
3/4" = 1'-0"
-

DRAFT
NOT FOR
CONSTRUCTION

E2 Consulting Engineers, Inc.
1900 Powell Street, Ste. 250
Emeryville, CA 94608
(510) 652-1164

CH2MHILL®

NO.	DATE	DESCRIPTION	GM/SPEC	DWN	CHKD	SUPV	APVD BY
1	09/08/14	PRE-FINAL (90%) DESIGN		MD			VMB
0	04/05/13	INTERMEDIATE (60%) DESIGN		MD	KJ	VMB	VMB

REVISIONS

APPROVED BY
SO
SUPV VMB
DSGN KDD
DWN MD
CHKD
OK VMB
DATE 6/30/14
SCALES AS NOTED

TOPOCK GROUNDWATER REMEDIATION PROJECT
CONDITIONED WATER STORAGE TANK FARM SECTIONS AND DETAILS
GAS TRANSMISSION & DISTRIBUTION
PACIFIC GAS AND ELECTRIC COMPANY
SAN FRANCISCO, CALIFORNIA

MICROFILM
BILL OF MATL
DWG LIST
SUPSDS
SUPSD BY
SHEET NO. S-14-12 of SHEETS
REV 1

FILENAME: E2-S-XXX-1410AD.dwg
PLOT DATE: $PLOTDATE PLOT TIME: $PLOTTIME

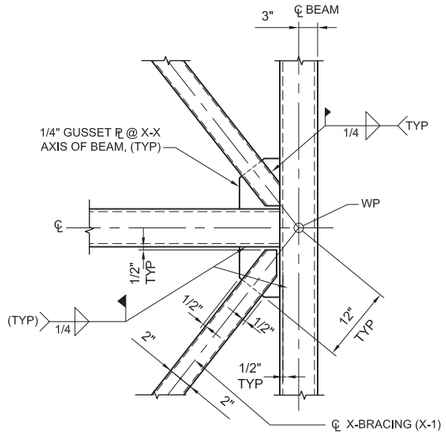

1 DETAIL
1" = 1'-0"
S-14-11

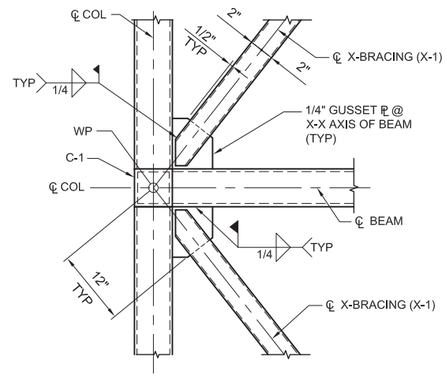

2 DETAIL
1" = 1'-0"
S-14-11

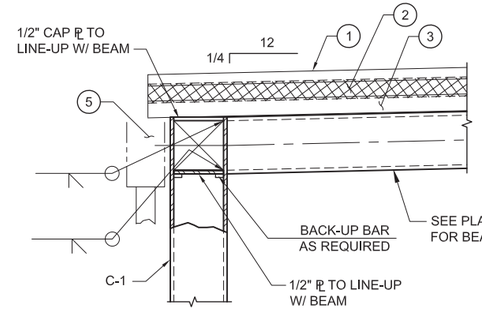

SECTION B-B

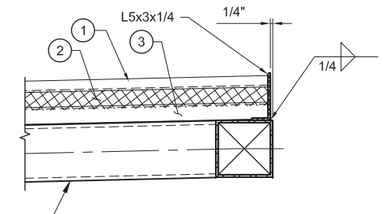

SECTION A-A

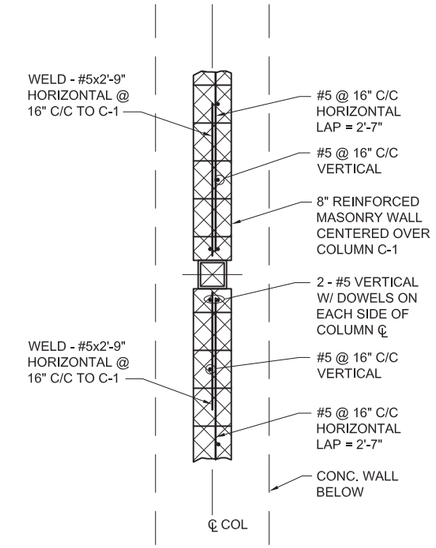

B SECTION
3/4" = 1'-0"
S-14-11

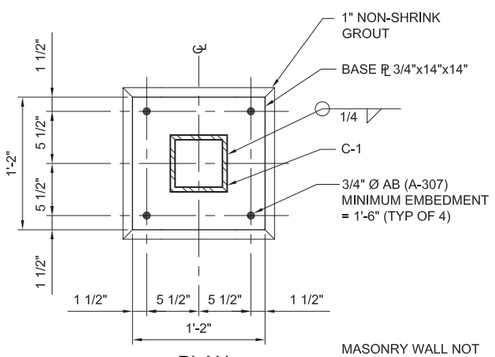

PLAN

MASONRY WALL NOT SHOWN FOR CLARITY

5 DETAIL
1 1/2" = 1'-0"
S-14-10, S-14-11

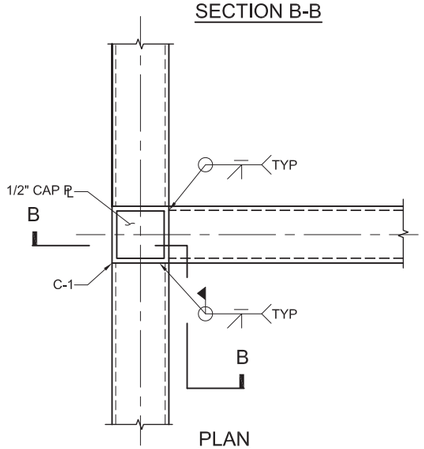

PLAN

3 DETAIL
1 1/2" = 1'-0"
S-14-11

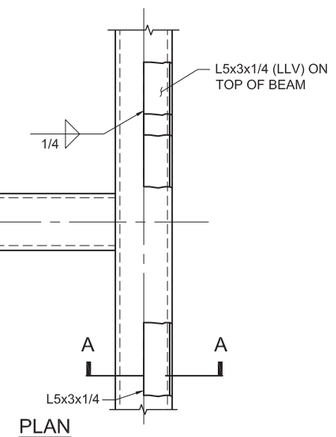

PLAN

4 DETAIL
1 1/2" = 1'-0"
S-14-11

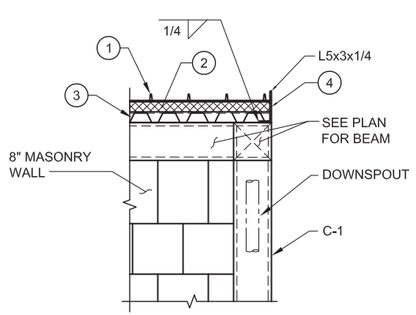

A SECTION
1" = 1'-0"
S-14-11

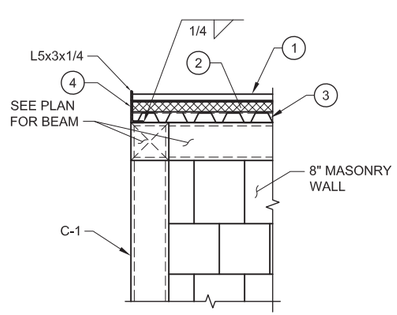

B SECTION
1" = 1'-0"
S-14-11

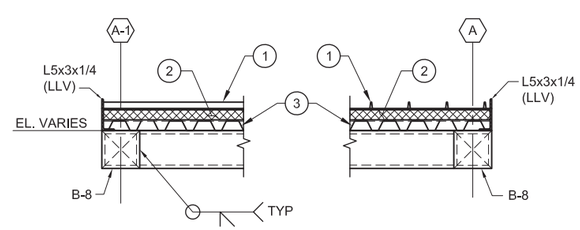

C SECTION
1" = 1'-0"
S-14-11

KEY NOTES

1. 1 1/2" STANDING SEAM METAL ROOF, SEE ARCHITECTURAL DRAWINGS.
2. 2" RIGID INSULATION.
3. 1 1/2" ROOF DECK, SEE DWG. S-00-01.
4. CLOSURE DETAIL, SEE ARCHITECTURAL DRAWINGS.
5. FOR GUTTER AND DOWNSPOUT, SEE ARCHITECTUTAL DRAWINGS.

DRAFT
NOT FOR
CONSTRUCTION

E2 Consulting Engineers, Inc.
1900 Powell Street, Ste. 250
Emeryville, CA 94608
(510) 652-1164

CH2MHILL®

NO.	DATE	DESCRIPTION	GM/SPEC	DWN	CHKD	SUPV	APVD BY
0	09/08/14	PRE-FINAL (90%) DESIGN		MD	KJ	VMB	VMB

REVISIONS

APPROVED BY	
SO	
SUPV	VMB
DSGN	KDD
DWN	MD
CHKD	
OK VMB	
DATE	6/30/14
SCALES	AS NOTED

TOPOCK GROUNDWATER REMEDIATION PROJECT
CONDITIONED WATER STORAGE TANK FARM
SECTIONS AND DETAILS
GAS TRANSMISSION & DISTRIBUTION
PACIFIC GAS AND ELECTRIC COMPANY
SAN FRANCISCO, CALIFORNIA

MICROFILM	
BILL OF MATL	
DWG LIST	
SUPSDS	
SUPSD BY	
SHEET NO. of SHEETS	
S-14-13	REV 0

PLOT DATE: $PLOTDATE PLOT TIME: $PLOTTIME
FILENAME: E2-S-XXX-1408AD.dwg

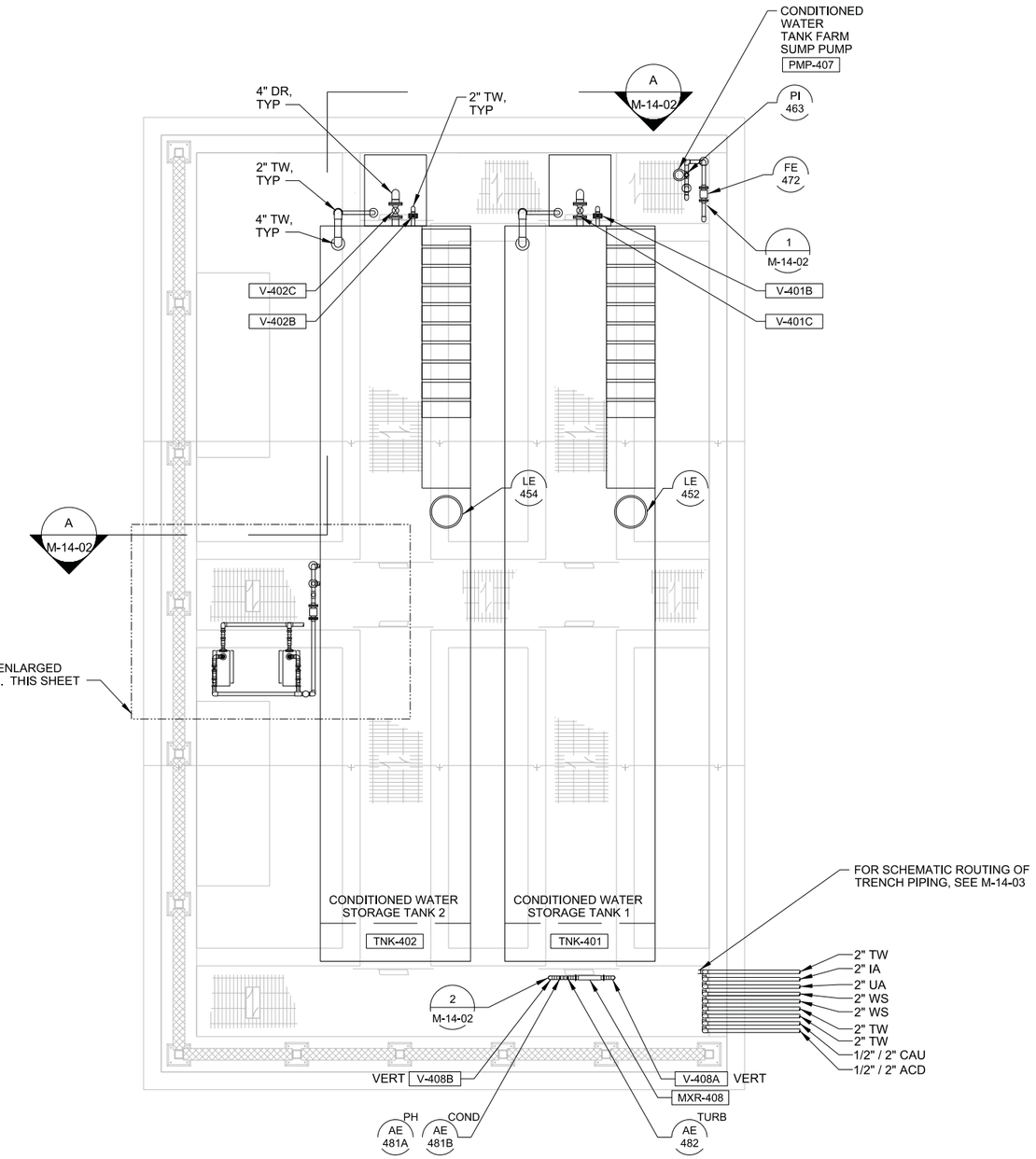

PLAN

1/4"=1'-0"

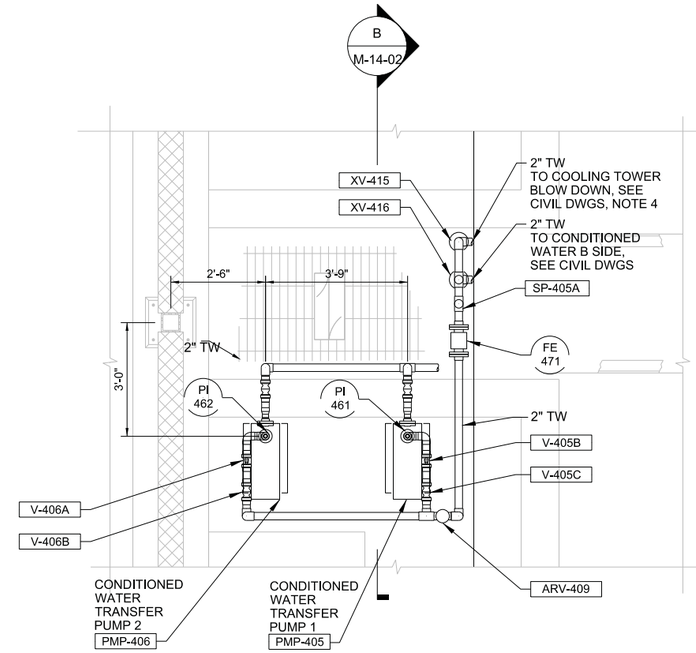

ENLARGED PLAN

1/2"=1'-0"

NOTES:

1. PIPE SUPPORTS NOT SHOWN. CONTRACTOR TO SUPPORT PIPES IN ACCORDANCE WITH SPEC. 40 05 15.
2. COMPRESSED AIR PIPING AND FITTINGS SHALL BE VIEGA PROPRESS COPPER PIPE OR APPROVED EQUAL. WALL THICKNESS SHALL BE SUITABLE FOR COMPRESSED AIR AT 110 PSIG AND 130 F AMBIENT (TYPE K OR BETTER).
3. MXR-408 IS 2" KOFLOW SERIES 308 6-ELEMENT
4. COOLING TOWER BLOWDOWN LINE CONNECTS TO TCS WASTEWATER TANK AND IS PUMPED FROM THERE TO EVAPORATION PONDS.

0 1 2 3

SCALE: 1/4"=1'

DRAFT
NOT FOR
CONSTRUCTION

CH2MHILL®

NO.	DATE	DESCRIPTION	GM/SPEC	DWN	CHKD	SUPV	APVD BY
0	09/2012	INTERMEDIATE (60%) DESIGN		GJ	WF	JP	CH
1	09/2014	PRE-FINAL (90%) DESIGN		DS	JP	RH	CH

REVISIONS

APPROVED BY: SO; SUPV; DSGN JP; DWN DS; CHKD BF; OK JP; DATE; SCALES AS SHOWN

TOPOCK GROUNDWATER REMEDIATION PROJECT
CONDITIONED WATER STORAGE TANK FARM PLAN
GAS TRANSMISSION & DISTRIBUTION
PACIFIC GAS AND ELECTRIC COMPANY
SAN FRANCISCO, CALIFORNIA

MICROFILM; BILL OF MATL; DWG LIST; SUPSDS; SUPSD BY; SHEET NO. of SHEETS; M-14-01; REV

PLOT DATE: 2014\09\04 PLOT TIME: 10:56:05 AM

FILENAME: CH-M-XXX-1401AD.dwg

N1808

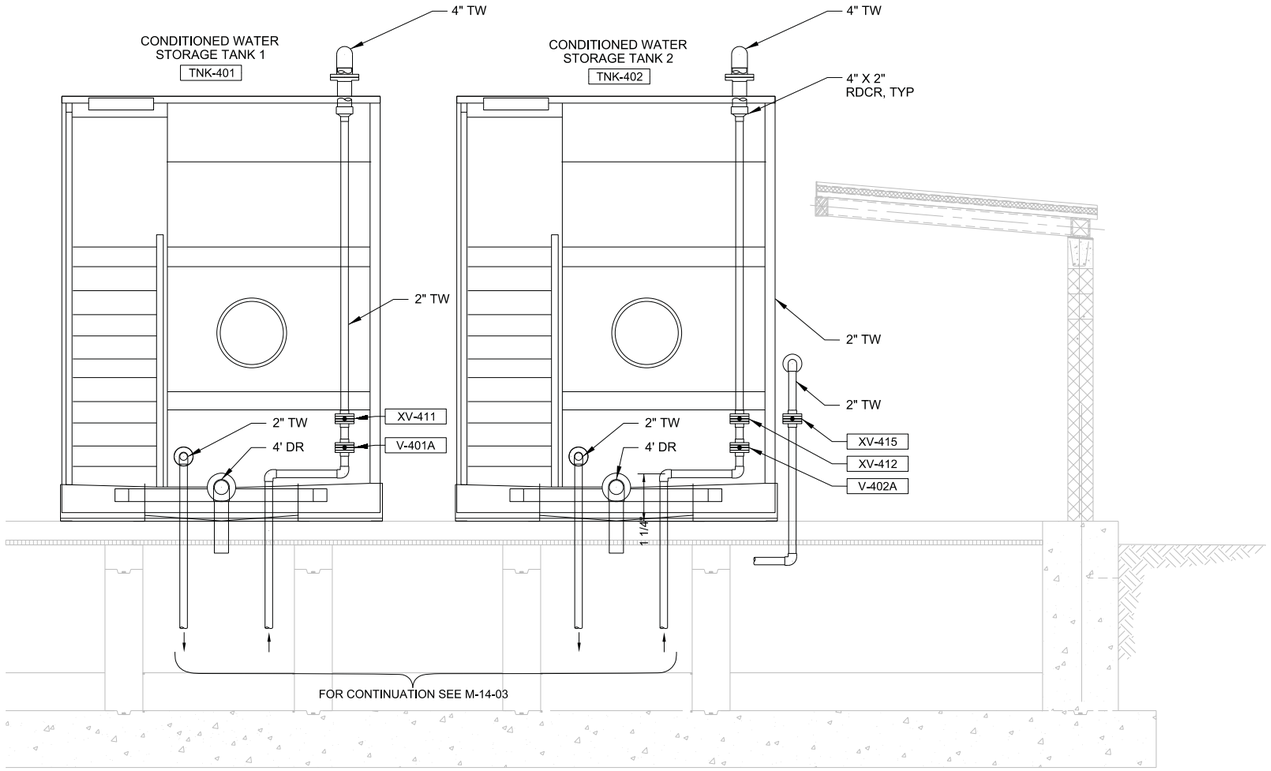

A SECTION
1/2" = 1'-0"
M-14-01

NOTES:

1. PIPE SUPPORTS NOT SHOWN. CONTRACTOR TO SUPPORT PIPES IN ACCORDANCE WITH SPEC. 40 05 15.
2. COMPRESSED AIR PIPING AND FITTINGS SHALL BE VIEGA PROPRESS COPPER PIPE OR APPROVED EQUAL. WALL THICKNESS SHALL BE SUITABLE FOR COMPRESSED AIR AT 110 PSIG AND 130 F AMBIENT (TYPE K OR BETTER).
3. COOLING TOWER BLOWDOWN LINE CONNECTS TO TCS WASTEWATER TANK AND IS PUMPED FROM THERE TO EVAPORATION PONDS.

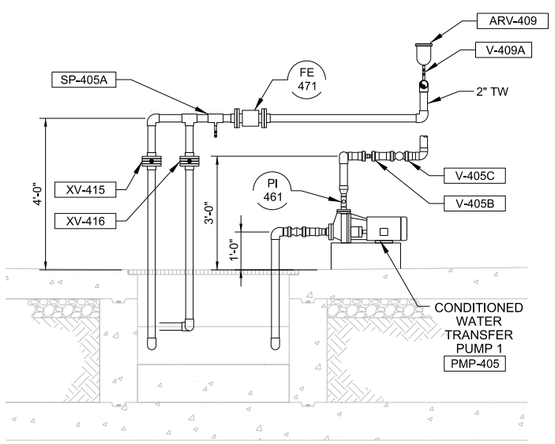

B SECTION
1/2" = 1'-0"
M-14-01

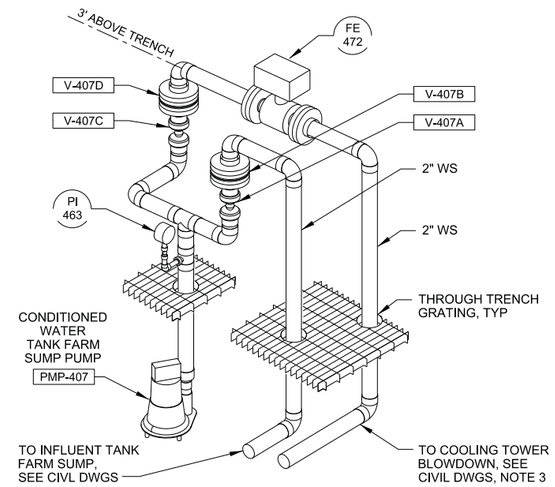

1 DETAIL
NTS
M-14-01

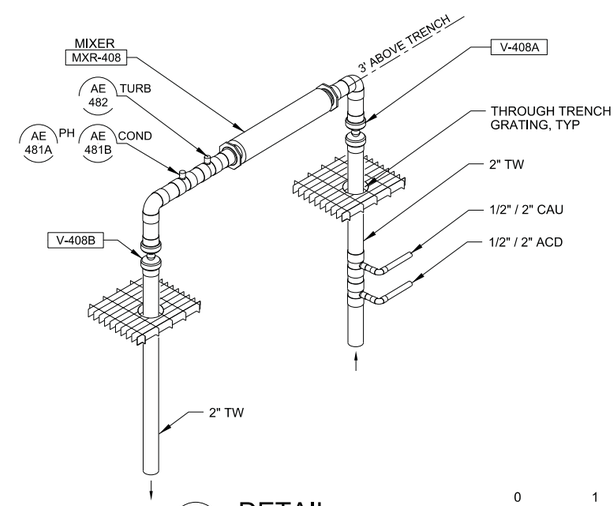

2 DETAIL
NTS
M-14-01

0 1 2 3
SCALE: 1/4"=1'

DRAFT
NOT FOR
CONSTRUCTION

CH2MHILL®

NO.	DATE	DESCRIPTION	GM/SPEC	DWN	CHKD	SUPV	APVD BY
0	09/2014	PRE-FINAL (90%) DESIGN		DS	WF	JP	CH

REVISIONS

APPROVED BY
SO
SUPV
DSGN JP
DWN DS
CHKD BF
OK JP
DATE
SCALES AS SHOWN

TOPOCK GROUNDWATER REMEDIATION PROJECT
CONDITIONED WATER STORAGE TANK FARM SECTIONS
GAS TRANSMISSION & DISTRIBUTION
PACIFIC GAS AND ELECTRIC COMPANY
SAN FRANCISCO, CALIFORNIA

MICROFILM
BILL OF MATL
DWG LIST
SUPSDS
SUPSD BY
SHEET NO. of SHEETS
M-14-02
REV

FILENAME: CH-M-XXX-1402AD.dwg
PLOT DATE: 2014/09/04 PLOT TIME: 10:57:07 AM
N1808

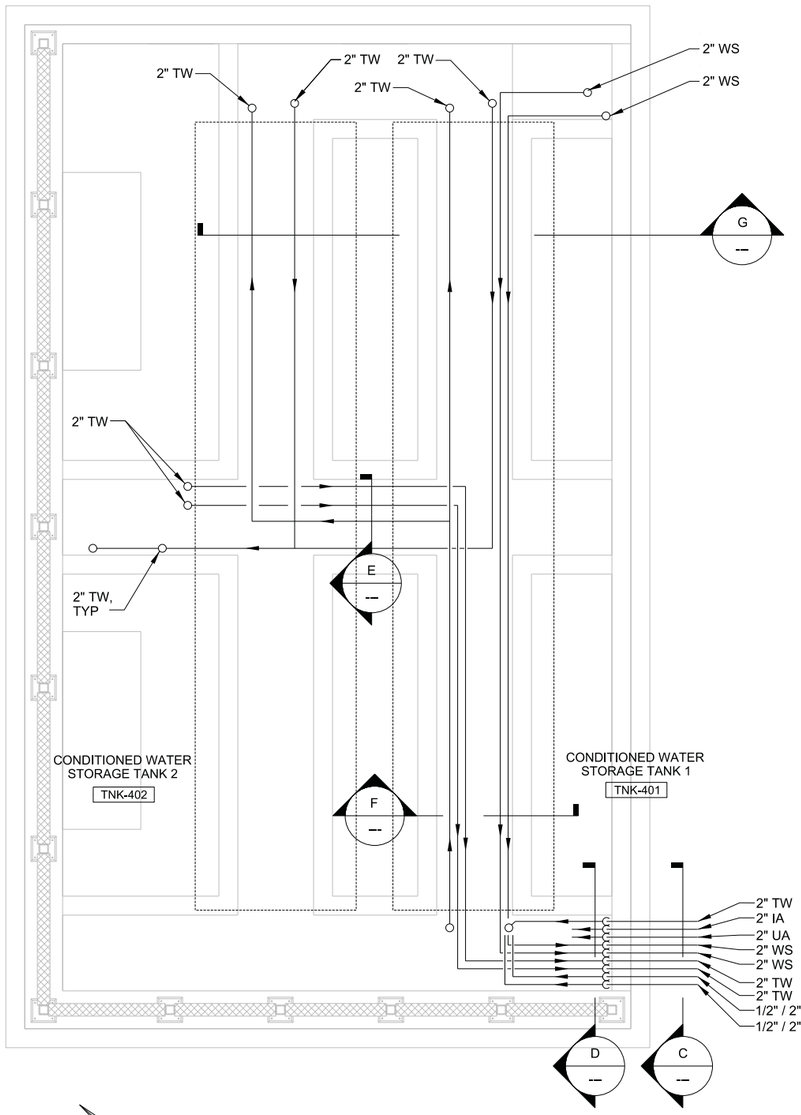

TRENCH PIPING SCHEMATIC
NTS

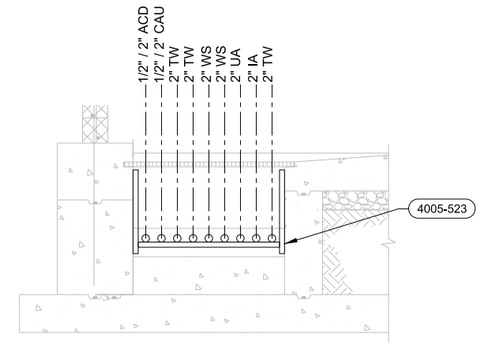

C SECTION
1/2" = 1'-0"

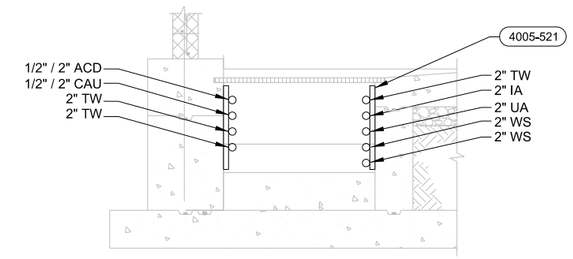

D SECTION
1/2" = 1'-0"

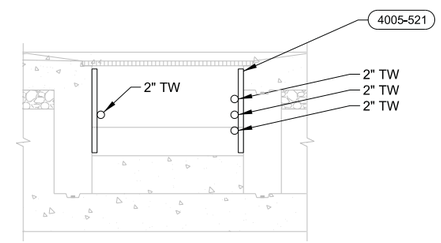

E SECTION
1/2" = 1'-0"

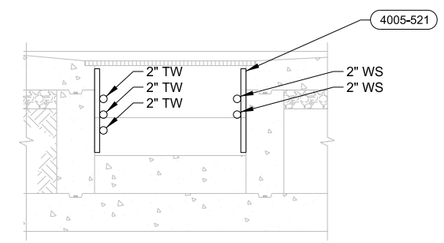

F SECTION
1/2" = 1'-0"

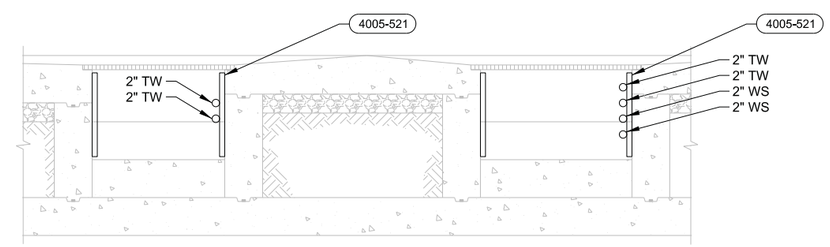

G SECTION
1/2" = 1'-0"

0 1 2 3
SCALE: 1/4"=1'

DRAFT
NOT FOR
CONSTRUCTION

CH2MHILL®

NO.	DATE	DESCRIPTION	GM/SPEC	DWN	CHKD	SUPV	APVD BY
0	09/2014	PRE-FINAL (90%) DESIGN		DS	WF	JP	CH

REVISIONS

APPROVED BY: SO; SUPV; DSGN RH; DWN GJ; CHKD JP; OK JP; DATE; SCALES

TOPOCK GROUNDWATER REMEDIATION PROJECT
CONDITIONED WATER STORAGE TANK FARM SECTIONS AND DETAILS
GAS TRANSMISSION & DISTRIBUTION
PACIFIC GAS AND ELECTRIC COMPANY
SAN FRANCISCO, CALIFORNIA

MICROFILM
BILL OF MATL
DWG LIST
SUPSDS
SUPSD BY
SHEET NO. of SHEETS
M-14-03
REV

FILENAME: CH-M-XXX-1403AD.dwg
PLOT DATE: 2014\09\04 PLOT TIME: 10:58:02 AM
N1808

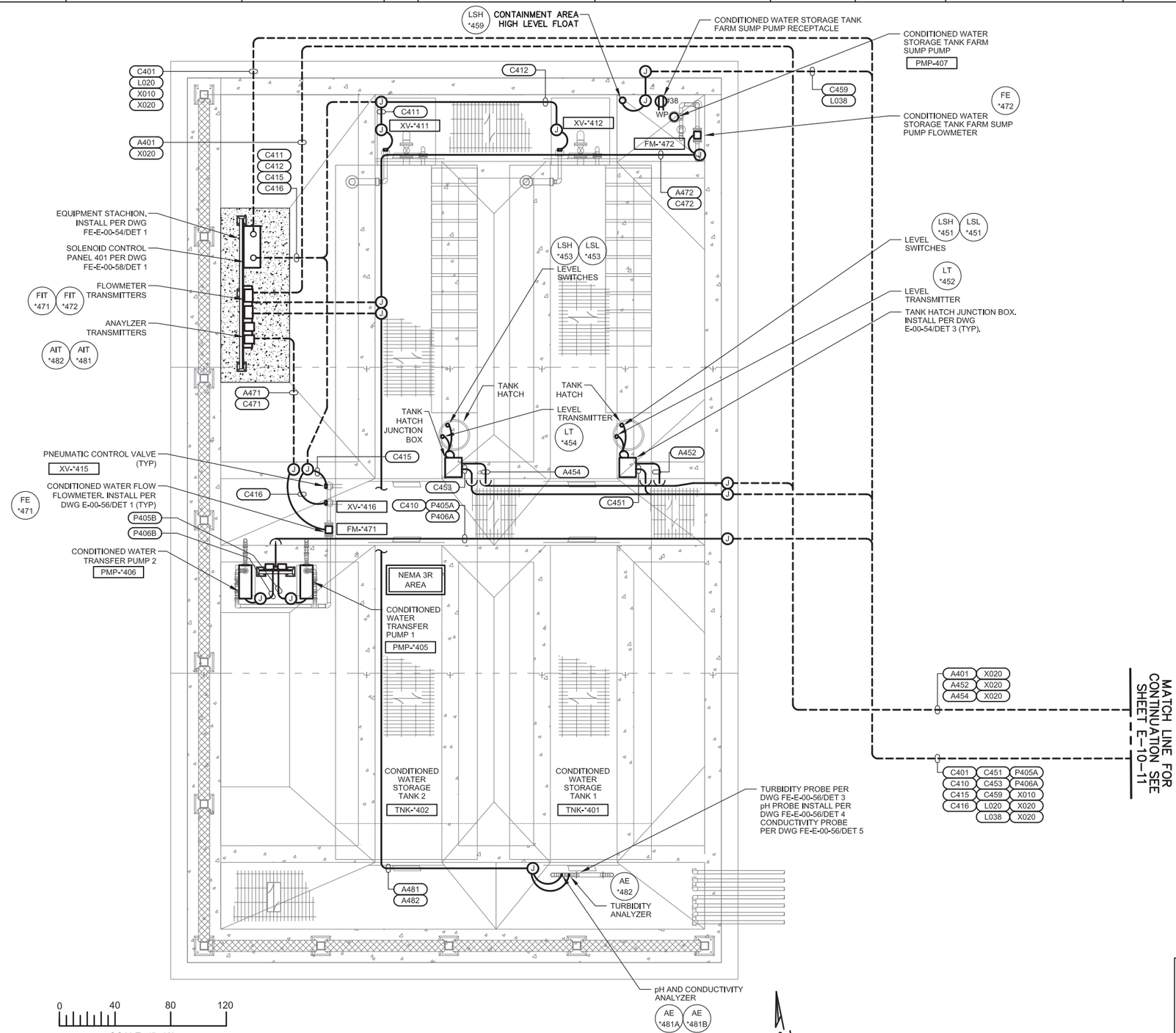

CONDITIONED WATER STORAGE TANK FARM ELECTRICAL PLAN

SCALE: 1" = 40'

ELECTRICAL PLAN NOTES:

1. SEE ELECTRICAL PLAN NOTES ON DRAWING E-00-02.

DRAFT
NOT FOR
CONSTRUCTION

FRISCH ENGINEERING, INC.
CONSULTING ELECTRICAL ENGINEERS
13405 FOLSOM BLVD, UNIT 600
FOLSOM, CA 95630
PH 916 353 1025
WWW.FRISCHENGINEERING.COM

CH2MHILL®

NO.	DATE	DESCRIPTION	GM/SPEC	DWN	CHKD	SUPV	APVD BY
0	9/8/14	PRE-FINAL (90%) DESIGN	MBY				TPF

REVISIONS

APPROVED BY: TPF

SUPV	TPF
DSGN	MBY
DWN	MBY, NC
CHKD	MF
OK	TPF
DATE	
SCALES	N/A

TOPOCK GROUNDWATER REMEDIATION PROJECT
CONDITIONED WATER TANK FARM ELECTRICAL PLAN
GAS TRANSMISSION & DISTRIBUTION
PACIFIC GAS AND ELECTRIC COMPANY
SAN FRANCISCO, CALIFORNIA

MICROFILM
BILL OF MATL
DWG LIST
SUPSDS
SUPSD BY
SHEET NO. of SHEETS
E-14-01
REV 0

FILENAME: FE-E-xxx-1401AD.dwg
PLOT DATE: Aug 25, 2014 PLOT TIME: 3:51:41pm

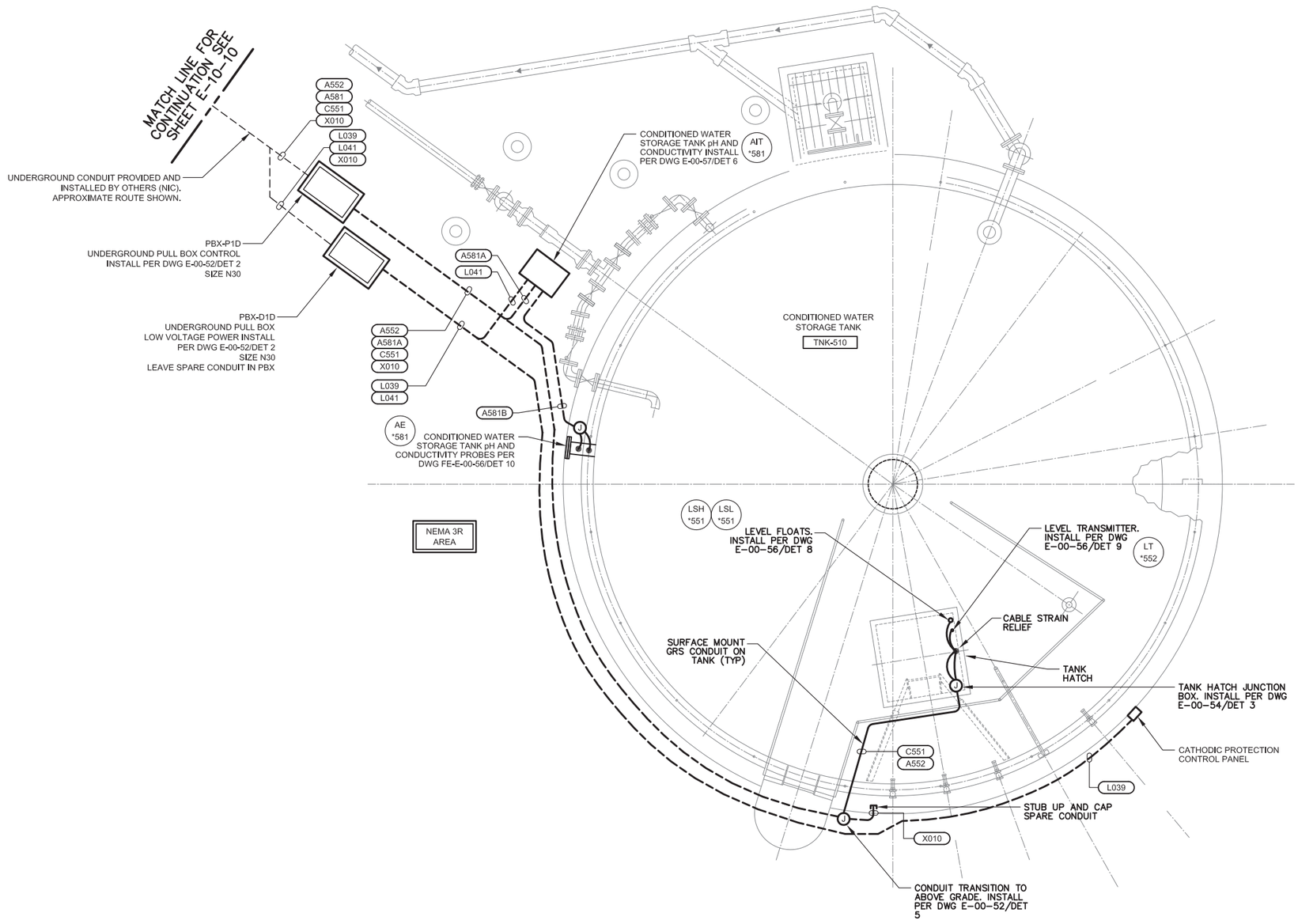

ELECTRICAL PLAN NOTES:

1. SEE ELECTRICAL PLAN NOTES ON DRAWING E-00-02.

0 30 60 90

SCALE: 1"=30'

CONDITIONED WATER STORAGE TANK ELECTRICAL PLAN

N

DRAFT
NOT FOR
CONSTRUCTION

FRISCH ENGINEERING, INC.
CONSULTING ELECTRICAL ENGINEERS
13405 FOLSOM BLVD, UNIT 600
FOLSOM, CA 95630
PH 916 353 1025
WWW.FRISCHENGINEERING.COM

CH2MHILL®

NO.	DATE	DESCRIPTION	GM/SPEC	DWN	CHKD	SUPV	APVD BY
0	9/8/14	PRE-FINAL (90%) DESIGN		MBY			TPF

REVISIONS

APPROVED BY: TPF

SO	
SUPV	TPF
DSGN	MBY
DWN	MBY, NC
CHKD	MF
OK	TPF
DATE	
SCALES	N/A

TOPOCK GROUNDWATER REMEDIATION PROJECT

CONDITIONED WATER STORAGE TANK ELECTRICAL PLAN

GAS TRANSMISSION & DISTRIBUTION

PACIFIC GAS AND ELECTRIC COMPANY
SAN FRANCISCO, CALIFORNIA

MICROFILM
BILL OF MATL
DWG LIST
SUPSDS
SUPSD BY
SHEET NO. of SHEETS: E-14-02
REV: 0

PLOT DATE: Aug 26, 2014 PLOT TIME: 1:54:39pm

FILENAME: FE-E-xxx-1402AD.dwg

N1808

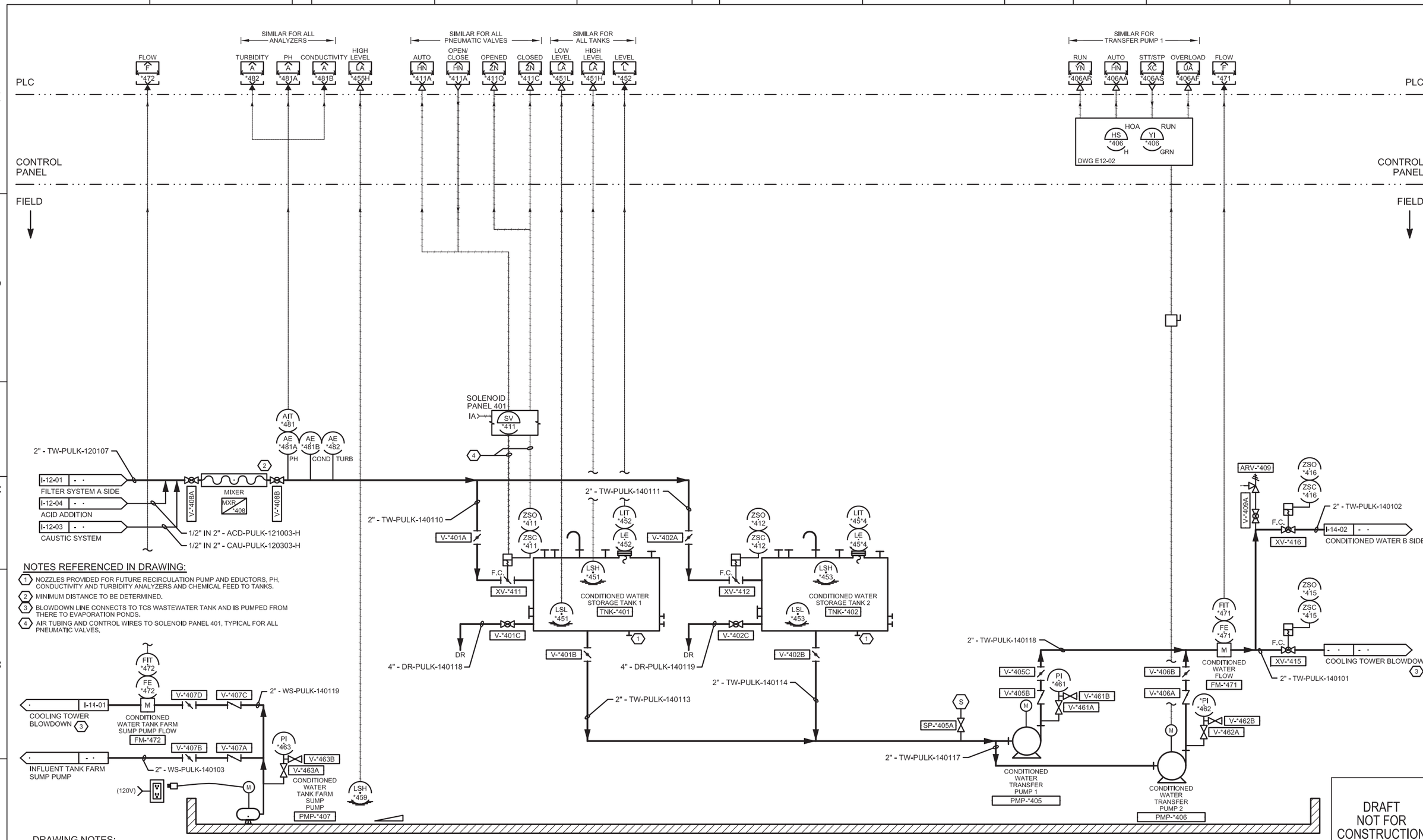

NOTES REFERENCED IN DRAWING:

1. NOZZLES PROVIDED FOR FUTURE RECIRCULATION PUMP AND EDUCTORS, PH, CONDUCTIVITY AND TURBIDITY ANALYZERS AND CHEMICAL FEED TO TANKS.
2. MINIMUM DISTANCE TO BE DETERMINED.
3. BLOWDOWN LINE CONNECTS TO TCS WASTEWATER TANK AND IS PUMPED FROM THERE TO EVAPORATION PONDS.
4. AIR TUBING AND CONTROL WIRES TO SOLENOID PANEL 401, TYPICAL FOR ALL PNEUMATIC VALVES.

DRAWING NOTES:

1. FOR FULL SCADA, INSTRUMENT AND EQUIPMENT TAG NUMBER IDENTIFICATION REPLACE "*" ON THIS DRAWING WITH LOCATION ID RTP01.

CONDITIONED WATER TANK FARM A SIDE

DRAFT NOT FOR CONSTRUCTION

FRISCH ENGINEERING, INC.
CONSULTING ELECTRICAL ENGINEERS
13405 FOLSOM BLVD, UNIT 600
FOLSOM, CA 95630
PH 916 353 1025
WWW.FRISCHENGINEERING.COM

CH2MHILL®

NO.	DATE	DESCRIPTION	GM/SPEC	DWN	CHKD	SUPV	APVD BY
1	9/8/14	PRE-FINAL (90%) DESIGN		MBY			TPF
0	4/5/13	INTERMEDIATE (60%) DESIGN		MBY			TPF

REVISIONS

APPROVED BY: TPF
SO
SUPV TPF
DSGN MBY
DWN MBY, NC
CHKD MF
OK TPF
DATE
SCALES N/A

TOPOCK GROUNDWATER REMEDIATION PROJECT
P&ID
CONDITIONED WATER STORAGE TANK FARM A SIDE
GAS TRANSMISSION & DISTRIBUTION
PACIFIC GAS AND ELECTRIC COMPANY
SAN FRANCISCO, CALIFORNIA

MICROFILM
BILL OF MATL
DWG LIST
SUPSDS
SUPSD BY
SHEET NO. of SHEETS: I-14-01
REV: 1

PLOT TIME: 12:06:43pm
PLOT DATE: Aug 27, 2014
FILENAME: FE-XXX-1401AD.dwg

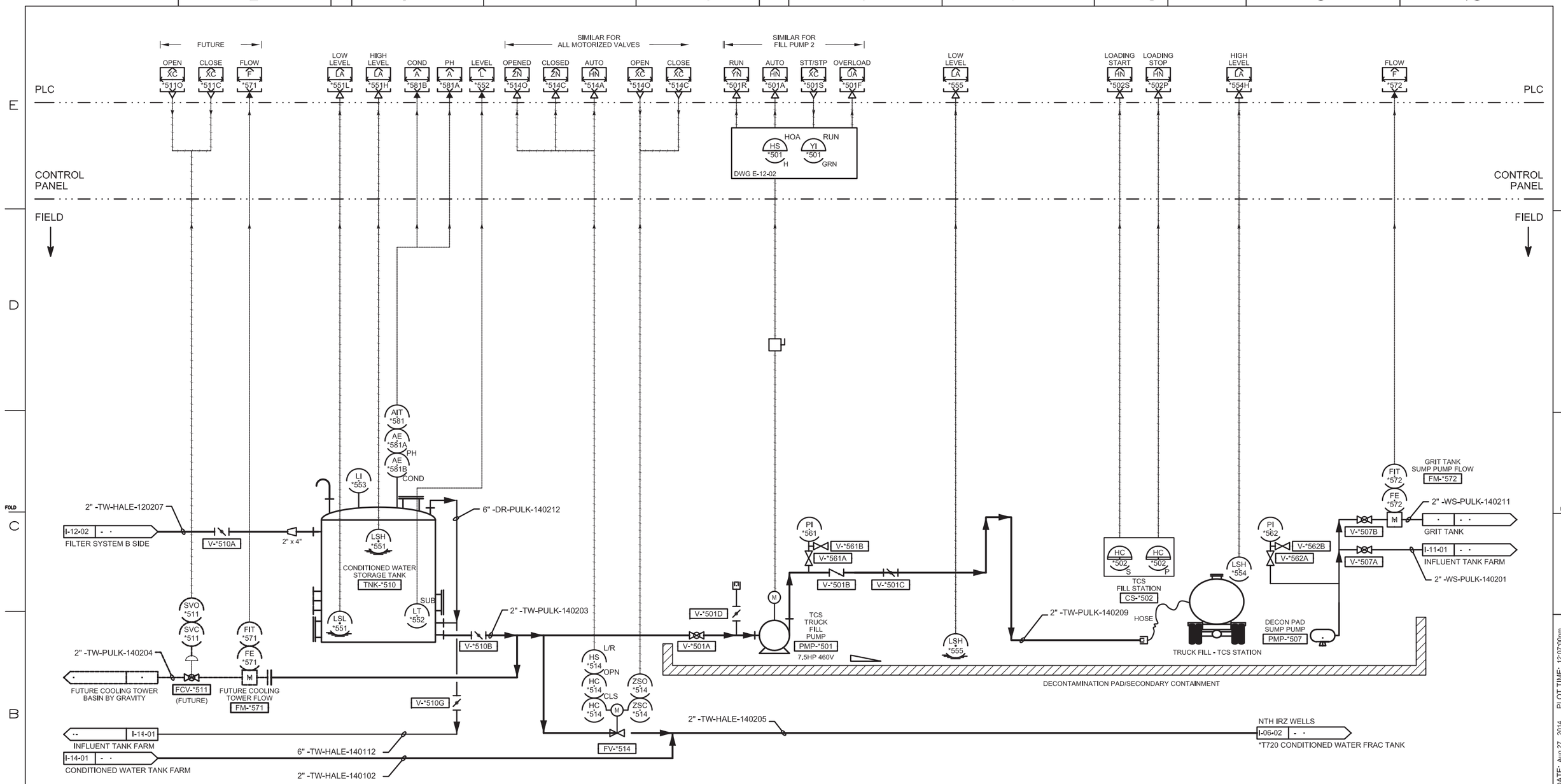

DRAWING NOTES:

1. FOR FULL SCADA, INSTRUMENT AND EQUIPMENT TAG NUMBER IDENTIFICATION REPLACE "*" ON THIS DRAWING WITH LOCATION ID RTP01.

CONDITIONED WATER DISTRIBUTION

DRAFT NOT FOR CONSTRUCTION

FRISCH ENGINEERING, INC.
CONSULTING ELECTRICAL ENGINEERS
13405 FOLSOM BLVD, UNIT 600
FOLSOM, CA 95630
PH 916 353 1025
WWW.FRISCHENGINEERING.COM

CH2MHILL®

NO.	DATE	DESCRIPTION	GM/SPEC	DWN	CHKD	SUPV	APVD BY
1	9/8/14	PRE-FINAL (90%) DESIGN		MBY			TPF
0	4/5/13	INTERMEDIATE (60%) DESIGN		MBY			TPF

REVISIONS

APPROVED BY: TPF
SO
SUPV TPF
DSGN MBY
DWN MBY, NC
CHKD MF
OK TPF
DATE
SCALES N/A

TOPOCK GROUNDWATER REMEDIATION PROJECT
P&ID
CONDITIONED WATER
B SIDE
GAS TRANSMISSION & DISTRIBUTION
PACIFIC GAS AND ELECTRIC COMPANY
SAN FRANCISCO, CALIFORNIA

MICROFILM
BILL OF MATL
DWG LIST
SUPSDS
SUPSD BY
SHEET NO. I-14-02 of SHEETS
REV 1

PLOT DATE: Aug 27, 2014 PLOT TIME: 12:07:00pm
FILENAME: FE-4-XXX-1402AD.dwg