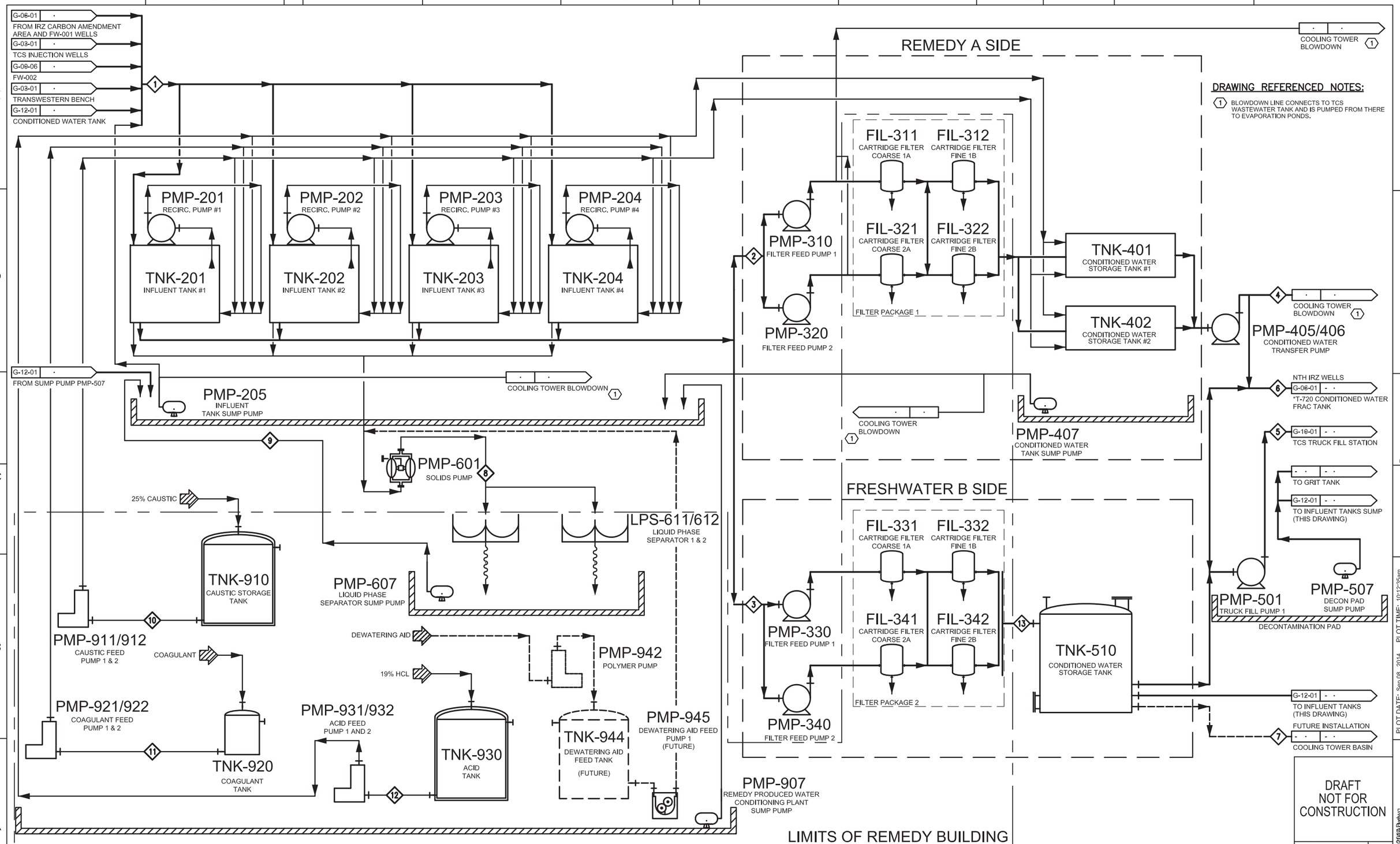

DRAFT
NOT FOR
CONSTRUCTION

CH2MHILL®

NO.	DATE	DESCRIPTION	GM/SPEC	DWN	CHKD	SUPV	APVD BY
2	9/8/14	PRE-FINAL (90%) DESIGN		MBY	CB	JP	CH
1	4/5/13	INTERMEDIATE (60%) DESIGN		MBY	KM	JP	CH
0	11/11/11	PRELIMINARY (30%) DESIGN		PC	JP	PT	CH

REVISIONS

APPROVED BY: TPF

SO
SUPV TPF
DSGN MBY
DWN MBY, NC
CHKD MF
OK TPF
DATE
SCALES N/A

TOPOCK GROUNDWATER REMEDIATION PROJECT
PROCESS FLOW DIAGRAM
REMEDY PRODUCED WATER CONDITIONING PLANT
GAS TRANSMISSION & DISTRIBUTION
PACIFIC GAS AND ELECTRIC COMPANY
SAN FRANCISCO, CALIFORNIA

MICROFILM
BILL OF MATL
DWG LIST
SUPSDS
SUPSD BY
SHEET NO. of SHEETS
G-12-01
REV 2

FILENAME: CH-G-XXXX12(01)D.dwg
PLOT DATE: Sep 08, 2014 PLOT TIME: 10:12:35am

Stream #		1	2	3	4	5	6	7	8	9	10	11	12	13
Waste Stream	Total Influent to Tanks	Influent Tank Farm, Influent	To Remedy A Side Filters	To Freshwater B Side Filters	To Cooling Tower Blowdown via TCS Wastewater Tank	To TCS Truck Fill Station	To *T720 Tank (IRZ Wells)	To Cooling Tower Basin (Note 1)	Liquid Phase Separator, Influent	Liquid Phase Separator, Liquid Return	25% Caustic to Influent Tank Farm	Coagulant to Influent Tank Farm	Acid (19% HCl) to Influent Tank Farm	Conditioned Water Storage Tank, Inlet
Design Flow (MG/Year)	7.6	7.6	3.9	2.9	0.78	0.0	6.8	0.0	0.08	0.076	0.001443	0.000061	0.001443	2.9
Design Flow (ac-ft/Year)	23.4				2.4		20.7							
TSS (mg/L)		40.6	60	10	60				2286	233				<5
Solids (lbs/year)		2580	973	123	389				1483	148				123
Solids (lbs/day)		7.1	2.7	0.3	1.1				4	0.4				0.3
Nominal Flow (MG/Year)	5.5	5.5	2.9	1.8	0.78	0.0	4.6	0.0	0.06	0.057	0.001443	0.000046	0.001443	1.8
Design Flow (ac-ft/Year)	16.8				2.4		14.2							
TSS (mg/L)		43.4	60	10	60				2466	247				<5
Solids (lbs/year)		1976	719	76	389				1182	118				76
Solids (lbs/day)		5.4	2.0	0.2	1.1				3	0.3				0.2
pH		2.01-7.4	7-7.4	7-7.4	2.01-7.4				7-7.4	7-7.4	14	3.5	1	6.5-8.5
Notes	1. The use of conditioned water as cooling tower makeup water is a future option.													

DRAFT
NOT FOR
CONSTRUCTION

CH2MHILL®

NO.	DATE	DESCRIPTION	GM/SPEC	DWN	CHKD	SUPV	APVD BY
2	9/8/14	PRE-FINAL (90%) DESIGN		JP	CB	JP	CH
1	4/5/13	INTERMEDIATE (60%) DESIGN		RH	KM	JP	CH
0	11/18/11	PRELIMINARY (30%) DESIGN		CY	MG	JP	CH

REVISIONS

APPROVED BY
SO
SUPV
DSGN RCH
DWN MBY
CHKD KM
OK CH
DATE 9/08/14
SCALES

TOPOCK GROUNDWATER REMEDIATION PROJECT
REMEDY PRODUCED WATER
MASS BALANCE

GAS TRANSMISSION & DISTRIBUTION
PACIFIC GAS AND ELECTRIC COMPANY
SAN FRANCISCO, CALIFORNIA

MICROFILM
BILL OF MATL
DWG LIST
SUPSDS
SUPSD BY
SHEET NO. of SHEETS
G-12-02
REV 2

FILENAME: CH-G-XXX-1202AD.dwg
PLOT DATE: 2014\09\05 PLOT TIME: 10:29:58 AM

N1808

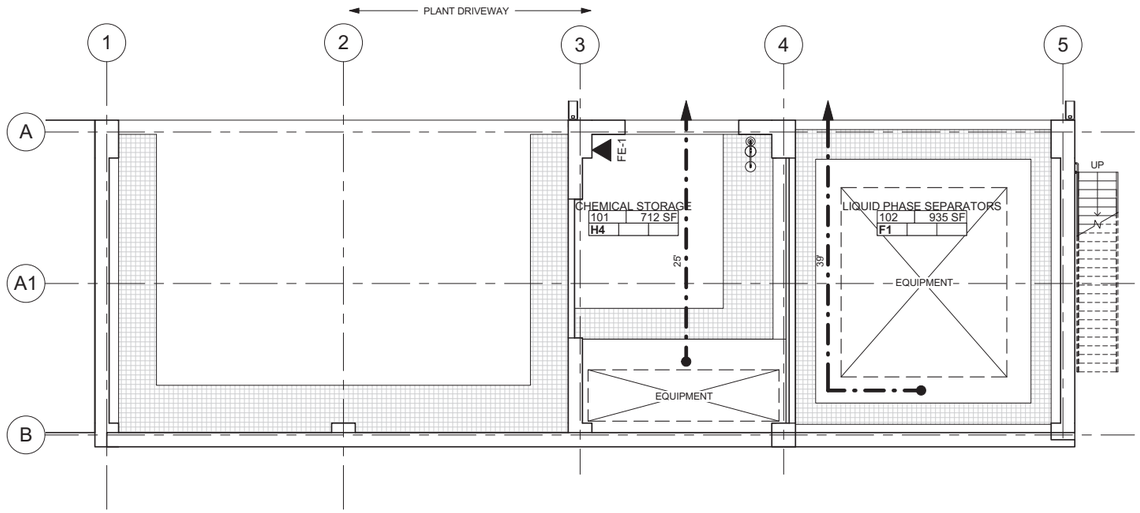

1 FIRST FLOOR LIFE SAFETY PLAN
1/8" = 1'-0"

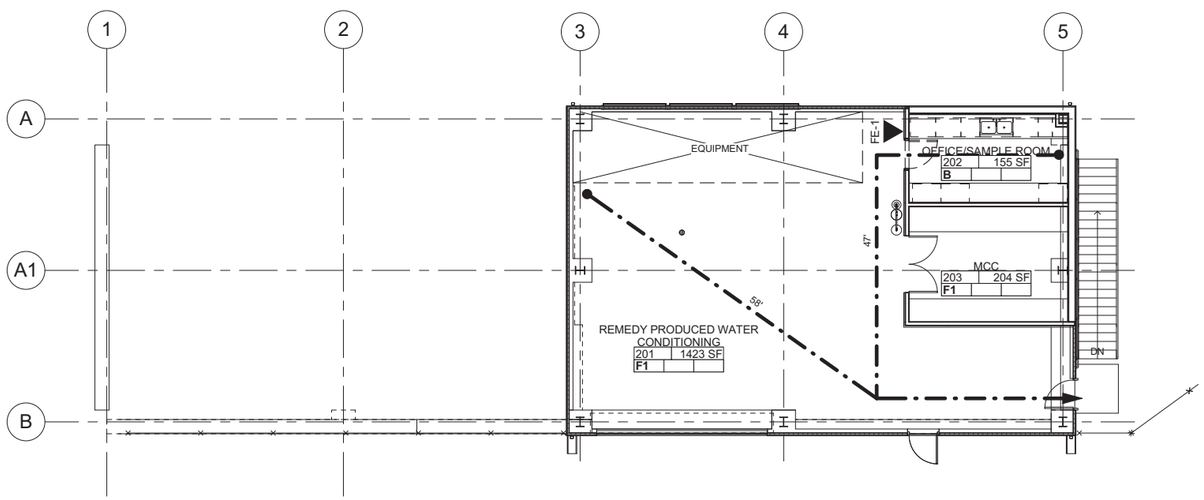

2 SECOND FLOOR LIFE SAFETY PLAN
1/8" = 1'-0"

EXIT REQUIREMENTS

REQUIRED EXITS (CBC 1015.1 & 1021):	1
MAX.TRAVEL DISTANCE ALLOWED: (TABLE 1016.2)	200
MAX. COMMON PATH TRAVEL: (CBC 1014.3)	75
MAX. DEAD ENDS: (TABLE 1018.4)	20
CORRIDOR WIDTH (CBC 1018.2):	44"
MIN. EGRESS WIDTH (CBC 1005.1):	36"

PLUMBING FIXTURES (CPC TABLE 422.1)

CPC TABLE A	F1, 4 OCCUPANTS (200 SF/PERSON)													
MINIMUM FIXTURE COUNT	WC		LAV		URINAL		SHOWER	0	SINK	0				
	M	F	M	F	M	F	DF	0	SS	0				
	0	0	0	0	0	0								
ACTUAL FIXTURE COUNT	WC		LAV		URINAL		SHOWER	0	SINK	0				
	M	F	M	F	M	F	DF	0	SS	0				
	0	0	0	0	0	0								
URINALS (CPC TABLE 422.1, FOOTNOTE #3)														
-				-										
-					-									

REQUIRED FIRE RESISTANT RATINGS

BUILDING ELEMENTS (TABLE 601)	
STRUCTURAL FRAME	0 HR
EXTERIOR BEARING WALLS	0 HR
INTERIOR BEARING WALLS	0 HR
INTERIOR NON-BEARING WALLS	0 HR
FLOOR CONSTRUCTION	0 HR
ROOF CONSTRUCTION	0 HR
SHAFT ENCLOSURE (707.4)	0 HR
STAIRWAY ENCLOSURE (1019.1)	0 HR
CORRIDOR (TABLE 1016.1)	0 HR
ALLOWABLE AREA OF EXTERIOR DOORS AND WINDOWS (704.8)	UNLIMITED
OCCUPANCY SEPARATIONS (CBC 508.3.3)	N/A
INCIDENTAL USE AREAS (508.2)	N/A
ACCESSORY USE AREAS (508.3.1)	N/A
NON-SEPARATED USE (508.3.2)	N/A
FIRE SEPARATION DISTANCE (TABLE 602)	30'
DISTANCE FROM ADJACENT BUILDING OR PROPERTY LINE	>30'

INTERIOR FINISHES (CBC 803.5)

OCCUPANCY:	F1	AREA:	3,424	CLASSIFICATION:	C
OCCUPANCY:	N/A	AREA:	N/A	CLASSIFICATION:	N/A

INSULATION REQUIREMENTS CLIMATE ZONE:15 (ROOM 202 & 203)

INSULATION (R-VALUE):	
ROOF:	R-25
WALLS:	U=0.062 CONT EXT INSUL
EXTERIOR DOORS:	U = 0.70
WINDOWS:	U = 0.36
ATTIC:	R-38 OR U = 0.027 MAX
UNHEATTED SLAB ON GRADE:	N/A
RSHGC:	U = 0.250
ROLL-UP OR SLIDING DOORS:	U = 1.450
GLAZING PERCENTAGE:	
WINDOW:	40% MAX
SKYLIGHT:	5% MAX
OTHER:	
DAYLIGHT CONTROLS:	YES
PERIMETER SLAB INSULATION:	N/A

CODE DATA

2013 CALIFORNIA BUILDING CODE

BUILDING:

PROJECT: PACIFIC GAS & ELECTRIC COMPANY TOPOCK REMEDIATION	ARCHITECT: CH2M HILL 2020 SW 4th AVENUE PORTLAND, OREGON

LOCAL OFFICIALS:

BUILDING DEPARTMENT CONTACTS	BUILDING OFFICIAL: TBD	PHONE: XXX-XXX-XXXX
	PLANS EXAMINER: TBD	PHONE: XXX-XXX-XXXX
FIRE DEPARTMENT CONTACT	FIRE MARSHAL: TBD	PHONE: XXX-XXX-XXXX
OTHER		PHONE:

PROJECT DESCRIPTION

NEW 2 STORY WATER TREATMENT FACILITY

GENERAL INFORMATION

USE AND OCCUPANCY CLASSIFICATION (CHAPTER 3)	F1
CONSTRUCTION CLASSIFICATION (CBC 602 & TABLE 503)	II-B

AREA AND HEIGHT LIMITATIONS

MAXIMUM ALLOWABLE AREA PER STORY (TABLE 503)		15,500
ALLOWABLE AREA A = T + [TF/100] + [TS/100]		
OCCUPANCY:		F1
TABULAR AREA (T) [TABLE 503]:		15,500
SPRINKLER INCREASE (S) [506.3]:		N/A
FRONTAGE INCREASE (F) [506.2]:		3,625
ALLOWABLE AREA PER FLOOR (A):		19,125
ACTUAL AREA:		
ACTUAL PER FLOOR:	FIRST	1,632
	SECOND	1,792

INTERMEDIATE LEVELS:

MEZZANINE:	AREA: N/A	# OF OCCUPANTS: N/A	# OF EXITS: N/A
INDUSTRIAL EQUIPMENT PLATFORM (CBC 505.5):	AREA: N/A		
MAXIMUM ALLOWABLE STORIES (TABLE 503)		2	
ACTUAL NUMBER OF STORIES:		2	
MAXIMUM ALLOWABLE HEIGHT (TABLE 503)		55'	
ACTUAL HEIGHT:		39'	
AUTOMATIC SPRINKLER FOR STORY INCREASE (CBC 504.2):		N/A	

OCCUPANCY / EGRESS INFORMATION

DESIGN OCCUPANCY (TABLE 1004.1.2)	F1
NUMBER OF OCCUPANCY PER FLOOR:	4
EGRESS WIDTH BASED ON OCCUPANCY (TABLE 1005.1)	44"

FIRE PROTECTION

SPRINKLERS (IBC SECT 903)	N/A
FIRE EXTINGUISHERS (SECT 906)	2A:40BC
DISTANCE TO FIRE HYDRANT	TBD

GENERAL NOTES:

1. FOR SIGN INFORMATION AND TYPE DESCRIPTIONS SEE SPECIFICATIONS SECTION 10 14 00.
2. FOR ARCHITECTURAL LEGEND SEE DWG CH-A-XXX-1201AD.
3. FOR ABBREVIATIONS SEE DWG CH-A-XXX-1201AD.
4. FOR FIRE EXTINGUISHER INFORMATION SEE SPECIFICATIONS SECTION 10 14 00.

LEGEND

X'	TRAVEL DISTANCE (X = TOTAL DISTANCE TO EXIT IN FEET)
X"	EGRESS WIDTH (IN INCHES)
FE-1	FIRE EXTINGUISHER
	EYEWASH/SAFETY SHOWER

Code Schedule		
-	Applicable Code	Standard
a	Zoning Code:	San Bernardino County Development Code
b	Building code:	2013 CALIFORNIA BUILDING CODE (CBC), TITLE 24, PART 2
c	Fire code:	2013 CALIFORNIA FIRE CODE (CFC), TITLE 24, PART 9
d	Mechanical code:	2013 CALIFORNIA MECHANICAL CODE (CMC), TITLE 24, PART 4
e	Plumbing code:	2013 CALIFORNIA PLUMBING CODE (CPC), TITLE 24, PART 5
f	Electrical code:	2013 CALIFORNIA ELECTRICAL CODE (CEC), TITLE 24, PART 3
g	Energy code:	2013 CALIFORNIA ENERGY CODE (CEC), TITLE 24, PART 6; See 2013 Non-residential compliance manual for support
h	Green Code:	2013 CALIFORNIA GREEN BUILDING STANDARDS CODE (CGBSC). TITLE 24, PART 11, applicable to newly constructed buildings.
i	Accessibility:	CH11B ACCESSIBILITY TO PUBLIC BUILDINGS, PUBLIC ACCOMODATIONS, COMMERCIAL BUILDINGS AND PUBLIC HOUSING
j	Fire Extinguishers:	CCR T19 D1 CH3 PORTABLE FIRE EXTINGUISHERS
k	Health and Sanitation:	Title 6 Health and Sanitation, Chapter 6.96, Hazardous Material Business Plans and The California Accidental Release Prevention Program (HMBP & CARPP), Reference for the California State Health Safety Code
l	Fire Sprinkler standard:	2013 NFPA 13 – Installation of Sprinkler Systems
m	Flammable Liquids standard:	2008 NFPA 30 – Flammable and Combustible Liquids Code
n	Fire Alarm standard:	2013 NFPA 72 – National Fire Alarm Code
o	Exit Signs	2009 NFPA 170 – Standard for Fire Safety and Emergency Symbols
p	Hazard Identification standard:	2012 NFPA 704 – Standard System for Identification of the Hazards of Materials for Emergency Response
q	ASCE 7	2010 ASCE 7 – Minimum Design Loads for Buildings and Other Structures
r	Fire Doors	1997 UL10B – Fire Test for Door Assemblies; 2013 NFPA 80 – FIRE DOORS AND OTHER OPENING PROTECTIVES
s	Panic Hardware	2007 UL 305 – Panic Hardware
t	Fire Dampers	2006 UL 555 – Fire Dampers
u	Cabinets	2005 UL 1275 – Flammable Liquid Storage Cabinets

N 0' 8' 16' 24'
SCALE 1/8"=1'

DRAFT
NOT FOR
CONSTRUCTION

CH2MHILL®

NO.	DATE	DESCRIPTION	GM/SPEC	DWN	CHKD	SUPV	APVD BY
0	9/8/14	PRE-FINAL (90%) DESIGN		RV	RD	CH	AV

REVISIONS

APPROVED BY: SO; SUPV; DSGN AV; DWN RV; CHKD RD; OK -; DATE 09/08/14; SCALES

TOPOCK GROUNDWATER REMEDIATION PROJECT
REMEDY PRODUCED WATER CONDITIONING PLANT
CODE SUMMARY SHEET
GAS TRANSMISSION & DISTRIBUTION
PACIFIC GAS AND ELECTRIC COMPANY
SAN FRANCISCO, CALIFORNIA

MICROFILM
BILL OF MATL
DWG LIST
SUPSDS
SUPSD BY
SHEET NO. of SHEETS
A-12-01 REV 0

PLOT DATE: $PLOTDATE PLOT TIME: $PLOTTIME
FILENAME:

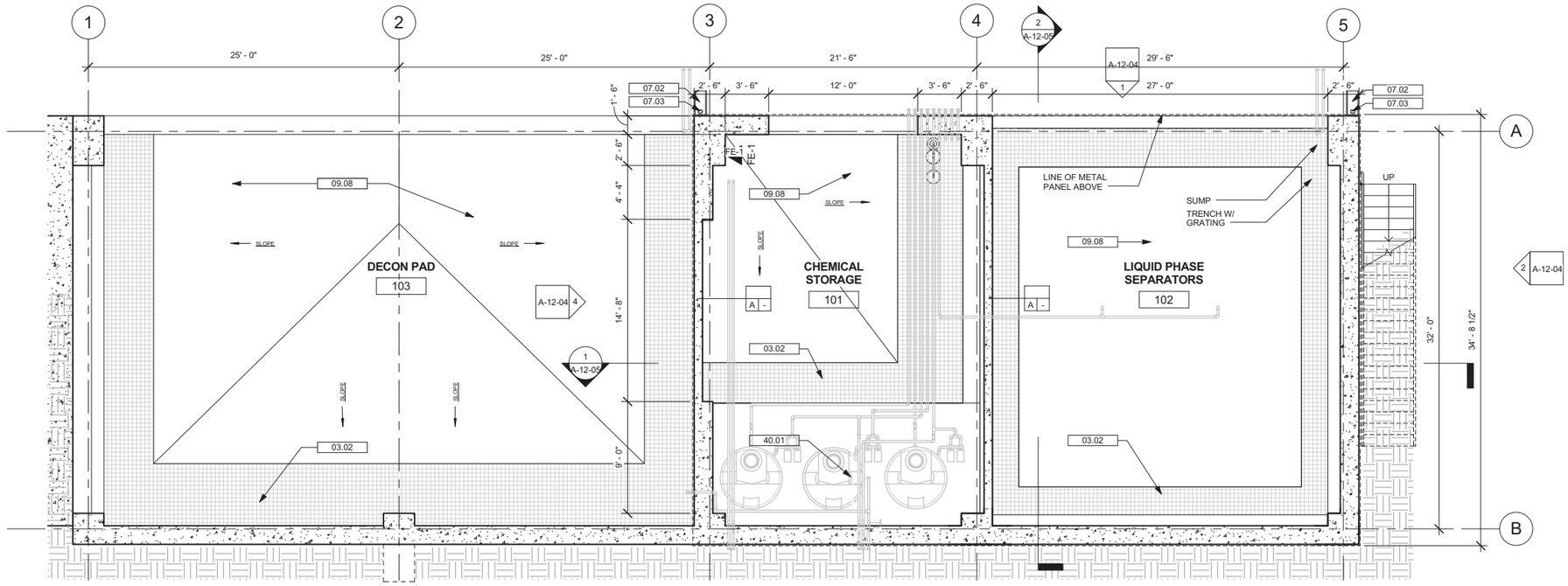

1 FIRST FLOOR PLAN
3/16" = 1'-0"

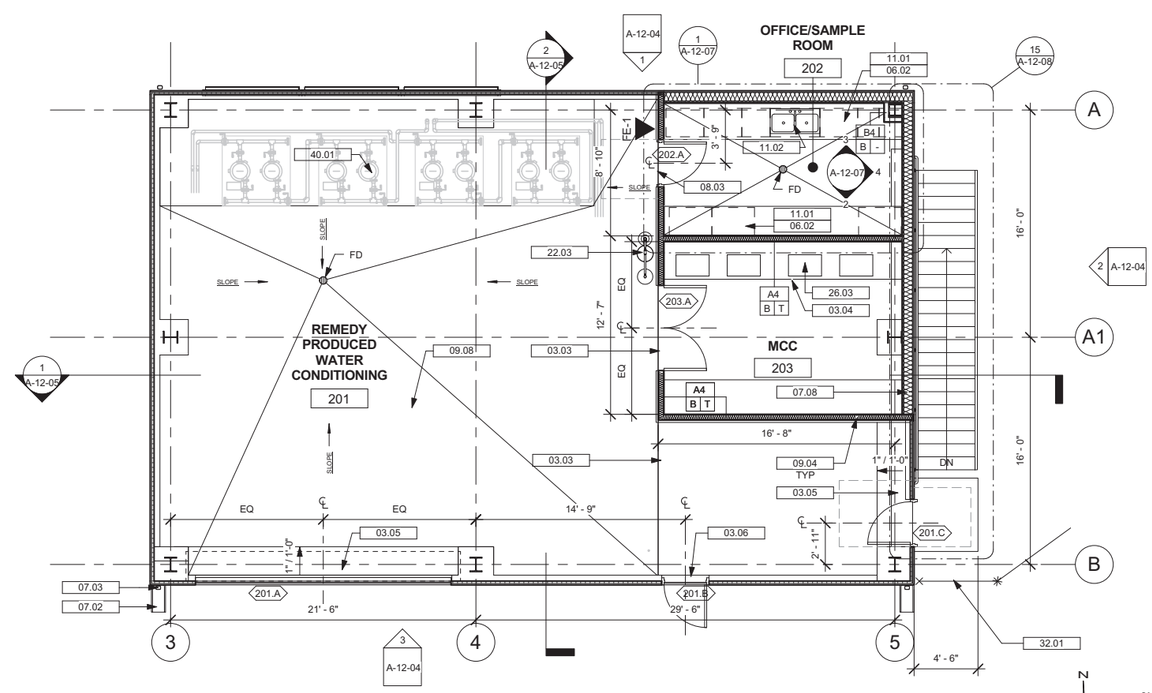

2 SECOND FLOOR
3/16" = 1'-0"

WALL TYPE NOTES:

A. REFER TO SHEET A-00-00 FOR WALL TYPES SYMBOLS, HEAD CONDITIONS, STUD/CMU SIZE AND INSULATION TYPE INFORMATION

WALL TYPE LEGEND

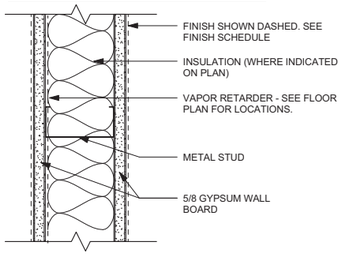

A WALL TYPE A (NON-RATED)
3" = 1'-0"

GENERAL NOTES

A. FOR WALL TAG SYMBOL INFORMATION, SEE SHEET A-00-00.
B. FOR DOOR AND WINDOW SCHEDULE, SEE SHEET A-12-10.
C. FOR ROOM FINISH SCHEDULE, SEE SHEET A-12-10.
D. PROVIDE 18" MINIMUM CLEAR ON PULL SIDE OF DOOR AND 12" MINIMUM CLEAR ON PUSH SIDE OF DOOR FROM FACE OF WALL, CABINET, OR EQUIPMENT TO DOOR OPENING FOR ADA COMPLIANCE.

KEYED NOTES XX.XX

03.02	CAST IN PLACE SUMP FOR PROCESS SYSTEMS, SEE STRUCTURAL FOR LOCATION AND DEPTH, COVERED WITH GRATING
03.03	FLOOR SLOPE CHANGE - SEE STRUCTURAL
03.04	HOUSEKEEPING PAD
03.05	SLOPED CONCRETE SURFACE AT DOOR OPENING
03.06	STEPPED CONCRETE AT DOOR OPENING
06.02	PLASTIC LAMINATE CABINETRY
07.02	SPLASH BLOCK
07.03	SHEET METAL DOWNSPOUT
07.08	GIRT SPACE FILLED WITH BATT INSULATION AT CONDITIONED SPACES
08.03	INSULATED HOLLOW METAL DOOR AND FRAME
09.04	GYPSUM WALL BOARD, LEVEL 4 FINISH
09.08	CHEMICAL RESISTANT COATING
11.01	LABORTORY SOLID SURFACE COUNTERTOP
11.02	LABORTORY DOUBLE COMPARTMENT SINK
22.03	SAFETY SHOWER
26.03	ELECTRICAL EQUIPMENT
32.01	SECURITY FENCE – SEE CIVIL
40.01	PROCESS EQUIPMENT ON HOUSEKEEPING PAD

DRAFT
NOT FOR CONSTRUCTION

CH2MHILL®

NO.	DATE	DESCRIPTION	GM/SPEC	DWN	CHKD	SUPV	APVD BY
0	9/8/14	PRE-FINAL (90%) DESIGN		RV	RD	CH	AV

REVISIONS

APPROVED BY: SO; SUPV; DSGN AV; DWN RV; CHKD RD; OK -; DATE 09/08/14; SCALES

TOPOCK GROUNDWATER REMEDIATION PROJECT
REMEDY PRODUCED WATER CONDITIONING PLANT
FLOOR PLANS
GAS TRANSMISSION & DISTRIBUTION
PACIFIC GAS AND ELECTRIC COMPANY
SAN FRANCISCO, CALIFORNIA

MICROFILM; BILL OF MATL; DWG LIST; SUPSDS; SUPSD BY; SHEET NO. of SHEETS

A-12-02 REV 0

FILENAME: PLOT DATE: $PLOTDATE PLOT TIME: $PLOTTIME

N1808

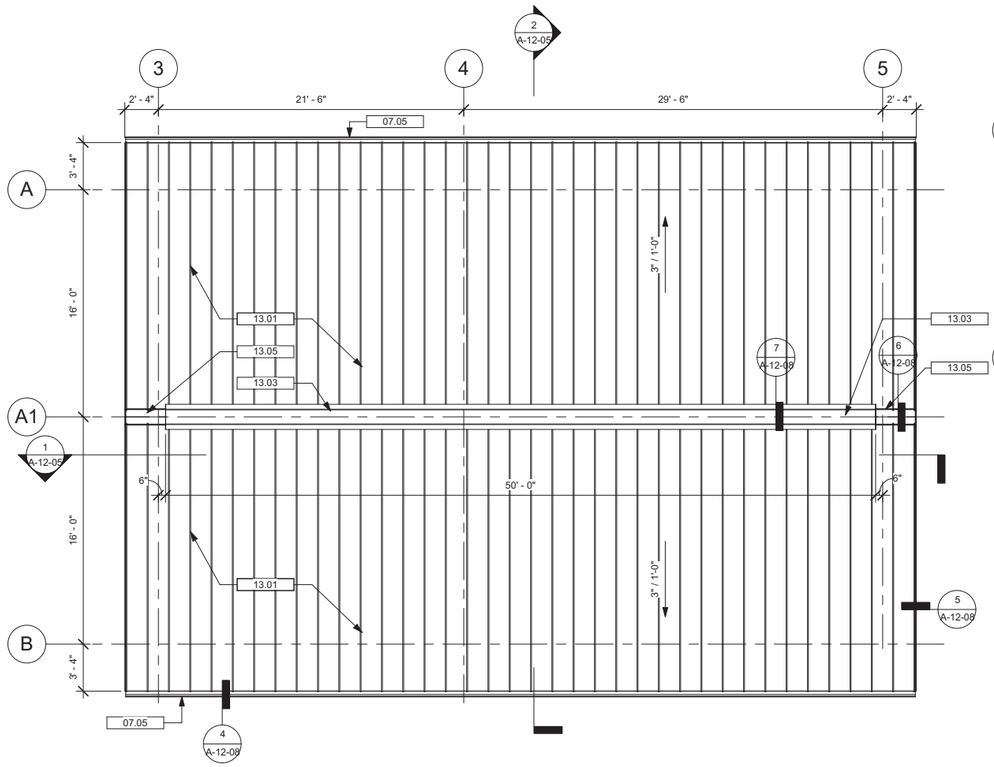

1 ROOF PLAN
3/16" = 1'-0"

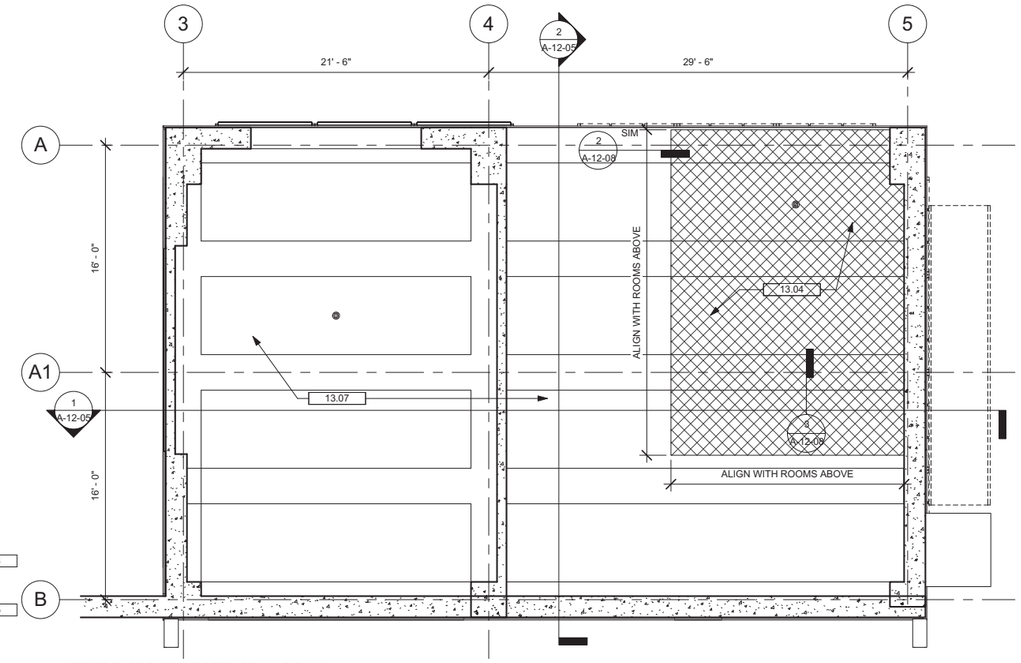

3 FIRST FLOOR REFLECTED CEILING PLAN
3/16" = 1'-0"

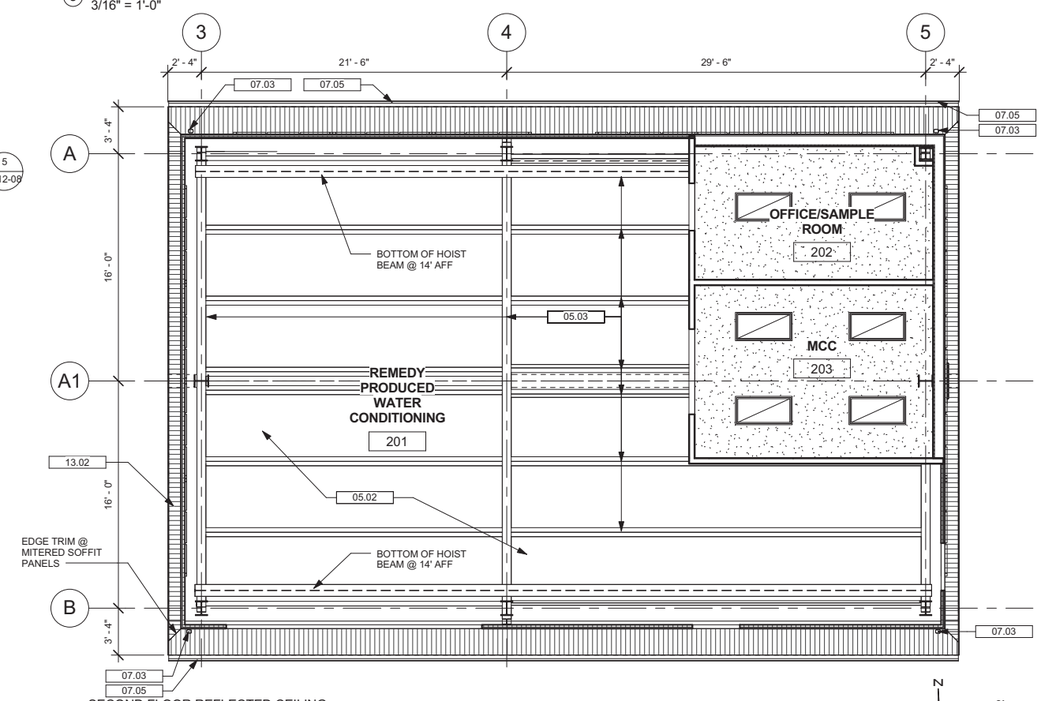

SECOND FLOOR REFLECTED CEILING PLAN
2 3/16" = 1'-0"

N

0' 5' 10' 15'
SCALE 3/16"=1'

GENERAL NOTES

A. FOR LIGHTING TYPE SEE ELECTRICAL DRAWINGS.
B. FOR DIFFUSER LOCATION, SEE MECHANICAL DRAWINGS
C. FOR ELEVATIONS AND MATERIAL OF ROOF DECK, SEE STRUCTURAL DRAWINGS.
D. SEE MECHANICAL SHEETS FOR QUANTITY AND LOCATION OF PLUMBING VENTS AND MECHANICAL EQUIPMENT

KEYED NOTES XX.XX

05.02	EXPOSED METAL DECK
05.03	PAINTED STRUCTURAL STEEL FRAME
07.03	SHEET METAL DOWNSPOUT
07.05	SHEET METAL GUTTER
13.01	PREFINISHED STANDING SEAM METAL ROOF
13.02	PREFINISHED INTERLOCKING PERFORATED METAL SOFFIT PANEL
13.03	PREFINISHED OPERABLE METAL RIDGE VENT
13.04	3" THICK INSULATED METAL BUILDING WALL PANEL ATTACHED TO CONCRETE SURFACE
13.05	PREFABRICATED, PREFINISHED SHEET METAL RIDGE COVER WITH END CLOSURE. JOIN TO RIDGE VENT WEATHERTIGHT
13.07	PREFINISHED 2" THICK INSULATED METAL BUILDING WALL PANEL, PAINT AS SELECTED FROM METAL BUILDING MANUFACTURERS STANDARD COLORS

DRAFT
NOT FOR
CONSTRUCTION

CH2MHILL®

NO.	DATE	DESCRIPTION	GM/SPEC	DWN	CHKD	SUPV	APVD BY
0	9/8/14	PRE-FINAL (90%) DESIGN		RV	RD	CH	AV

REVISIONS

APPROVED BY: SO; SUPV; DSGN AV; DWN RV; CHKD RD; OK -; DATE 09/08/14; SCALES

TOPOCK GROUNDWATER REMEDIATION PROJECT
REMEDY PRODUCED WATER CONDITIONING PLANT
ROOF PLAN & REFLECTED CEILING PLAN
GAS TRANSMISSION & DISTRIBUTION
PACIFIC GAS AND ELECTRIC COMPANY
SAN FRANCISCO, CALIFORNIA

MICROFILM; BILL OF MATL; DWG LIST; SUPSDS; SUPSD BY

SHEET NO. A-12-03 of SHEETS; REV 0

PLOT DATE: $PLOTDATE PLOT TIME: $PLOTTIME

FILENAME:

N1808

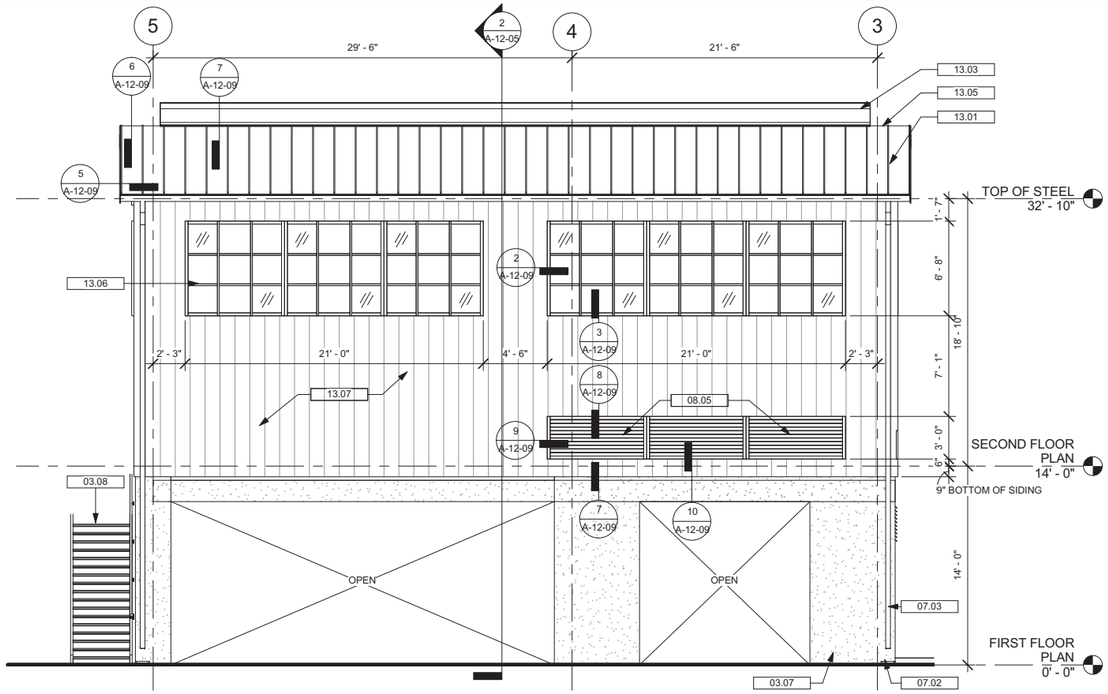

1 NORTH ELEVATION
3/16" = 1'-0"

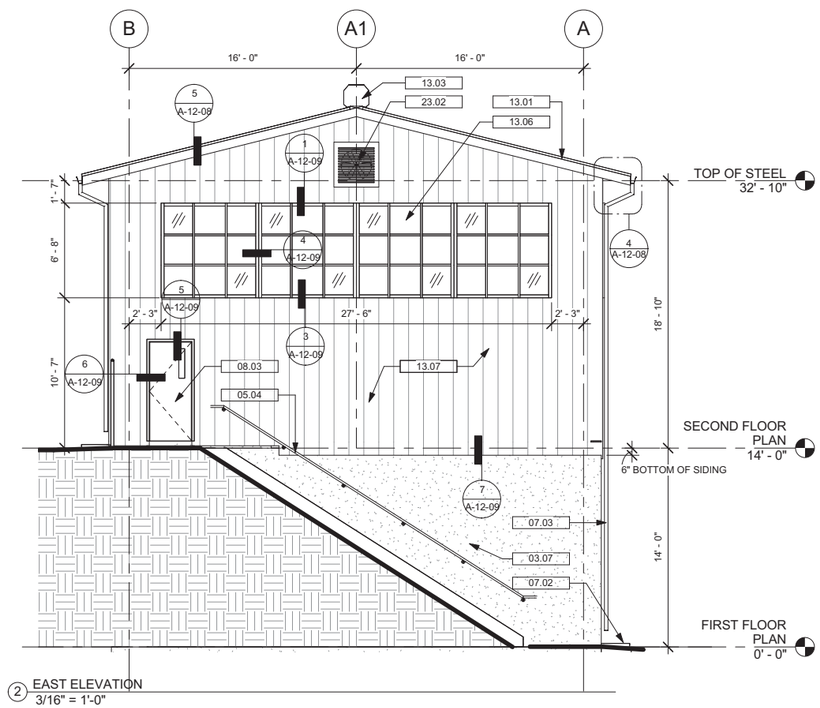

2 EAST ELEVATION
3/16" = 1'-0"

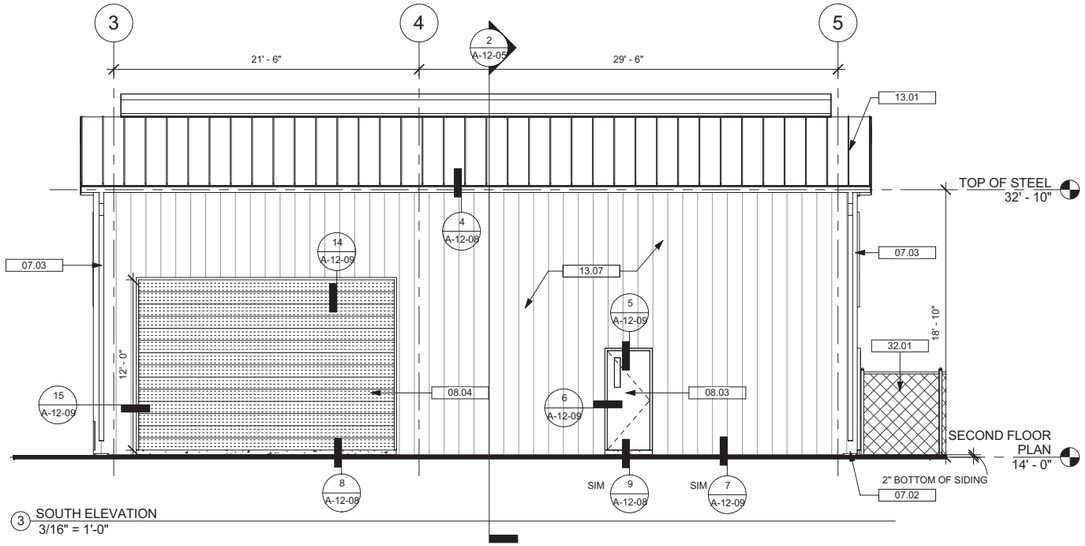

3 SOUTH ELEVATION
3/16" = 1'-0"

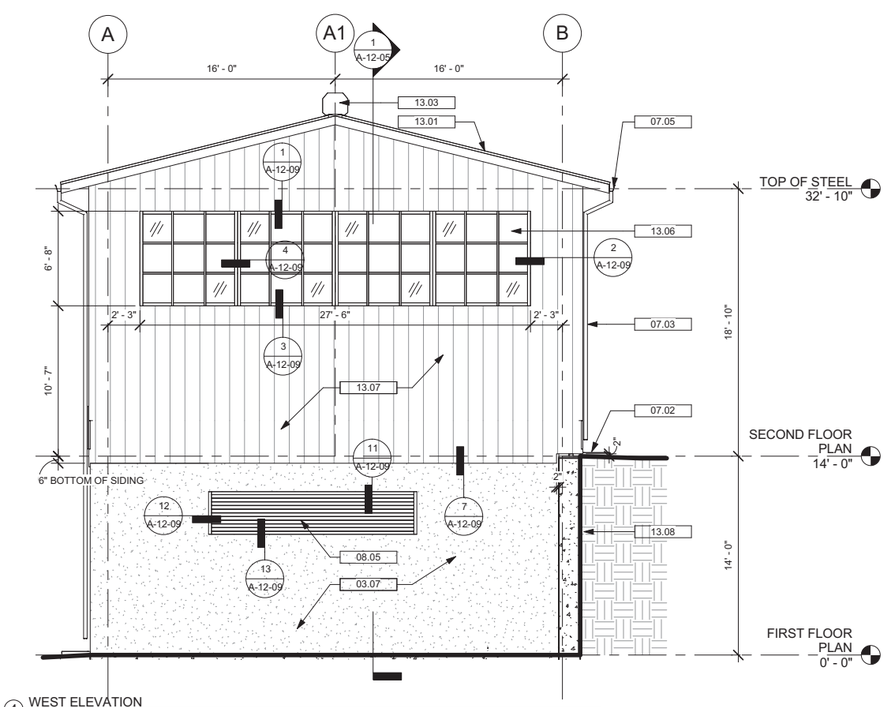

4 WEST ELEVATION
3/16" = 1'-0"

0' 5' 10' 15'
SCALE 3/16"=1'

GENERAL NOTES

A. SEE SHEET A-12-10 FOR DOOR SCHEDULE, DOOR TYPES AND WINDOW SIZES.
B. ALL PENETRATIONS THROUGH EXTERIOR CLADDING SYSTEMS SHALL BE SEALED WATER TIGHT

KEYED NOTES XX.XX

03.07	INTERGRALLY COLORED EXPOSED CONCRETE, FINISH PER FINISH SCHEDULE
03.08	CAST CONCRETE STAIR ON GRADE - SEE STRUCTURAL
05.04	GALVANIZED HAND RAIL, ATTACH TO CONCRETE. AT INSULATED METAL PANEL, ATTACH TO 4" WIDE 16 GAUGE SHEET METAL BACKING HUNG FROM HORIZONTAL GIRT FACES BEHIND INSULATED METAL PANEL
07.02	SPLASH BLOCK
07.03	SHEET METAL DOWNSPOUT
07.05	SHEET METAL GUTTER
08.03	INSULATED HOLLOW METAL DOOR AND FRAME
08.04	OVERHEAD COILING DOOR, PAINT TO MATCH INSULATED METAL WALL PANELS, MANUAL OPERATION, SLATS PERFORATED.
08.05	VENTILATION LOUVER
13.01	PREFINISHED STANDING SEAM METAL ROOF
13.03	PREFINISHED OPERABLE METAL RIDGE VENT
13.05	PREFABRICATED, PREFINISHED SHEET METAL RIDGE COVER WITH END CLOSURE. JOIN TO RIDGE VENT WEATHERTIGHT
13.06	METAL BUILDING MANUFACTURER STANDARD THERMALLY BROKEN ALUMINUM WINDOW FRAME WITH INSULATED GLASS CLAMPED TO INSULATED METAL PANEL OPENING EDGE
13.07	PREFINISHED 2" THICK INSULATED METAL BUILDING WALL PANEL, PAINT AS SELECTED FROM METAL BUILDING MANUFACTURERS STANDARD COLORS
13.08	NOTCH INSULATED METAL PANEL AROUND RETAINING WALL
23.02	EXAUST FAN BEHIND FIXED LOUVER
32.01	SECURITY FENCE – SEE CIVIL

DRAFT
NOT FOR
CONSTRUCTION

CH2MHILL®

NO.	DATE	DESCRIPTION	GM/SPEC	DWN	CHKD	SUPV	APVD BY
0	9/8/14	PRE-FINAL (90%) DESIGN		RV	RD	CH	AV

REVISIONS

APPROVED BY: SO, SUPV, DSGN AV, DWN RD, CHKD RD, OK -, DATE 09/08/14, SCALES

TOPOCK GROUNDWATER REMEDIATION PROJECT
REMEDY PRODUCED WATER CONDITIONING PLANT
EXTERIOR ELEVATIONS
GAS TRANSMISSION & DISTRIBUTION
PACIFIC GAS AND ELECTRIC COMPANY
SAN FRANCISCO, CALIFORNIA

MICROFILM
BILL OF MATL
DWG LIST
SUPSDS
SUPSD BY
SHEET NO. A-12-04 of SHEETS
REV 0

PLOT DATE: $PLOTDATE PLOT TIME: $PLOTTIME
FILENAME:

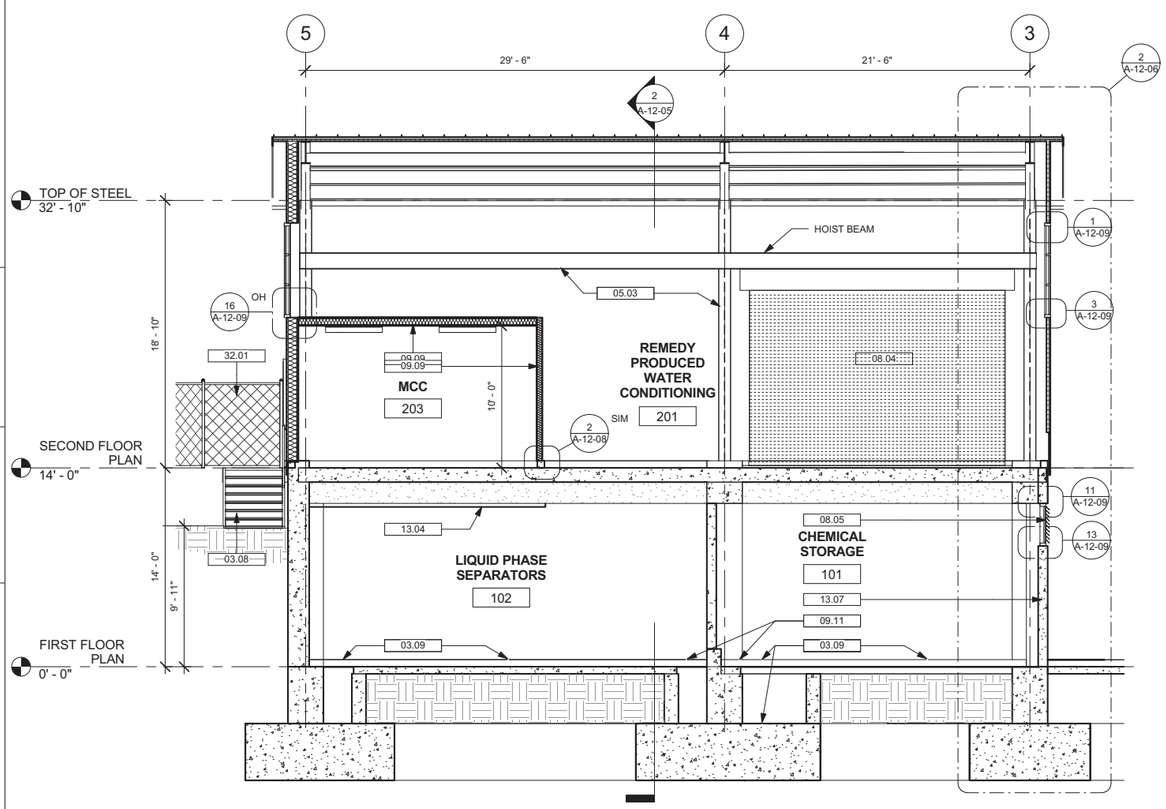

1 LONGITUDINAL SECTION
3/16" = 1'-0"

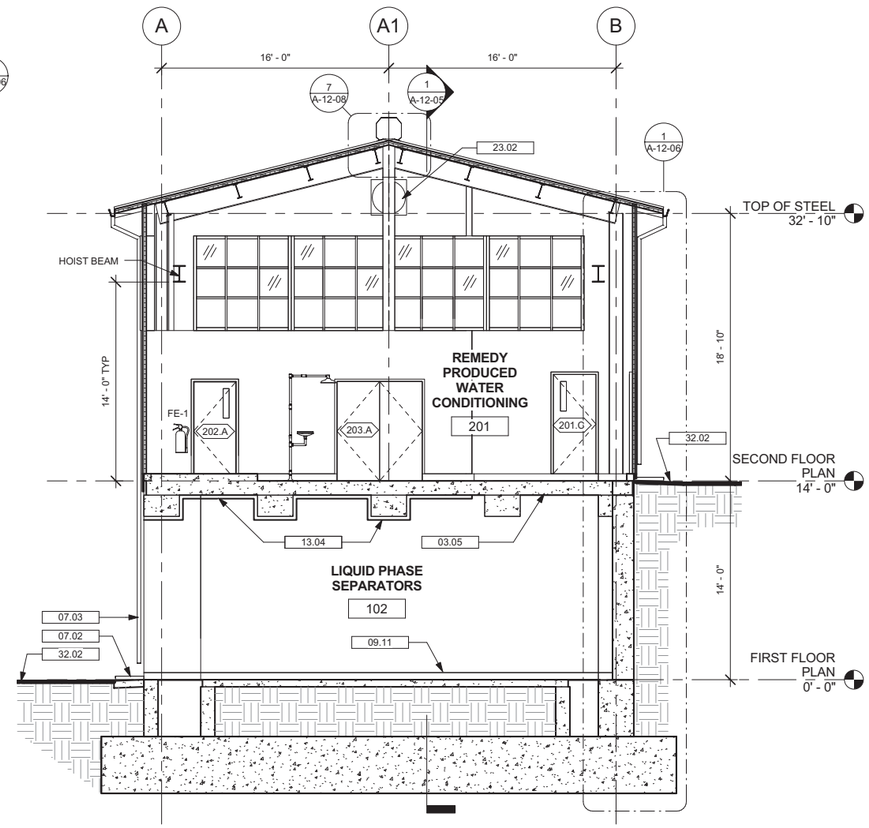

2 CROSS SECTION
3/16" = 1'-0"

GENERAL NOTES

A. SEE SHEET A-12-10 FOR DOOR SCHEDULE, DOOR TYPES AND WINDOW SIZES.
B. PROVIDE REINFORCEMENT IN METAL WALL PANELS TO ACCEPT SURFACE MOUNTED FIXTURES.

KEYED NOTES XX.XX

03.05	SLOPED CONCRETE SURFACE AT DOOR OPENING
03.08	CAST CONCRETE STAIR ON GRADE - SEE STRUCTURAL
03.09	CRC COVERED CAST CONCRETE PROCESS AREA FLOOR AND SPILL CONTAINMENT
05.03	PAINTED STRUCTURAL STEEL FRAME
07.02	SPLASH BLOCK
07.03	SHEET METAL DOWNSPOUT
08.04	OVERHEAD COILING DOOR, PAINT TO MATCH INSULATED METAL WALL PANELS, MANUAL OPERATION, SLATS PERFORATED.
08.05	VENTILATION LOUVER
09.09	NON-LOAD BEARING INSULATED METAL STUD ROOM ENCLOSURE
09.11	CHEMICAL RESISTANT COATING WALL BASE
13.04	3" THICK INSULATED METAL BUILDING WALL PANEL ATTACHED TO CONCRETE SURFACE
13.07	PREFINISHED 2" THICK INSULATED METAL BUILDING WALL PANEL, PAINT AS SELECTED FROM METAL BUILDING MANUFACTURERS STANDARD COLORS
23.02	EXAUST FAN BEHIND FIXED LOUVER
32.01	SECURITY FENCE – SEE CIVIL
32.02	PAIVING - SEE CIVIL

0' 5' 10' 15'
SCALE 3/16"=1'

DRAFT
NOT FOR
CONSTRUCTION

CH2MHILL®

NO.	DATE	DESCRIPTION	GM/SPEC	DWN	CHKD	SUPV	APVD BY
0	9/8/14	PRE-FINAL (90%) DESIGN		RV	RD	CH	AV

REVISIONS

APPROVED BY: SO, SUPV, DSGN AV, DWN RV, CHKD RD, OK -, DATE 09/08/14, SCALES

TOPOCK GROUNDWATER REMEDIATION PROJECT
REMEDY PRODUCED WATER CONDITIONING PLANT
BUILDING SECTIONS
GAS TRANSMISSION & DISTRIBUTION
PACIFIC GAS AND ELECTRIC COMPANY
SAN FRANCISCO, CALIFORNIA

MICROFILM
BILL OF MATL
DWG LIST
SUPSDS
SUPSD BY
SHEET NO. A-12-05 of SHEETS
REV 0

FILENAME:
PLOT DATE: $PLOTDATE PLOT TIME: $PLOTTIME
N1808

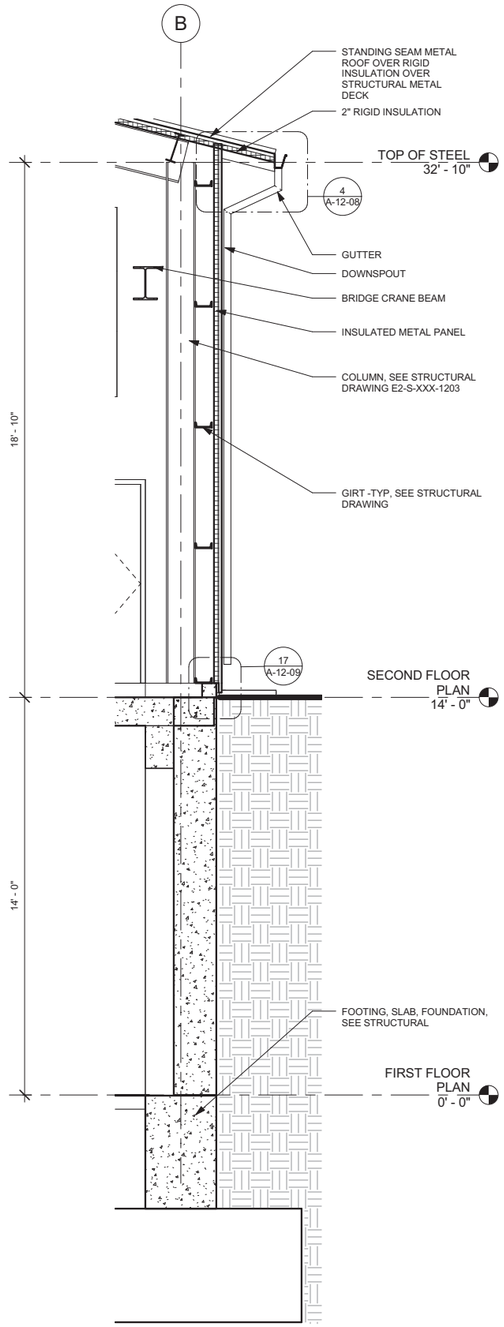

1 WALL SECTION AT EAVE
3/8" = 1'-0"

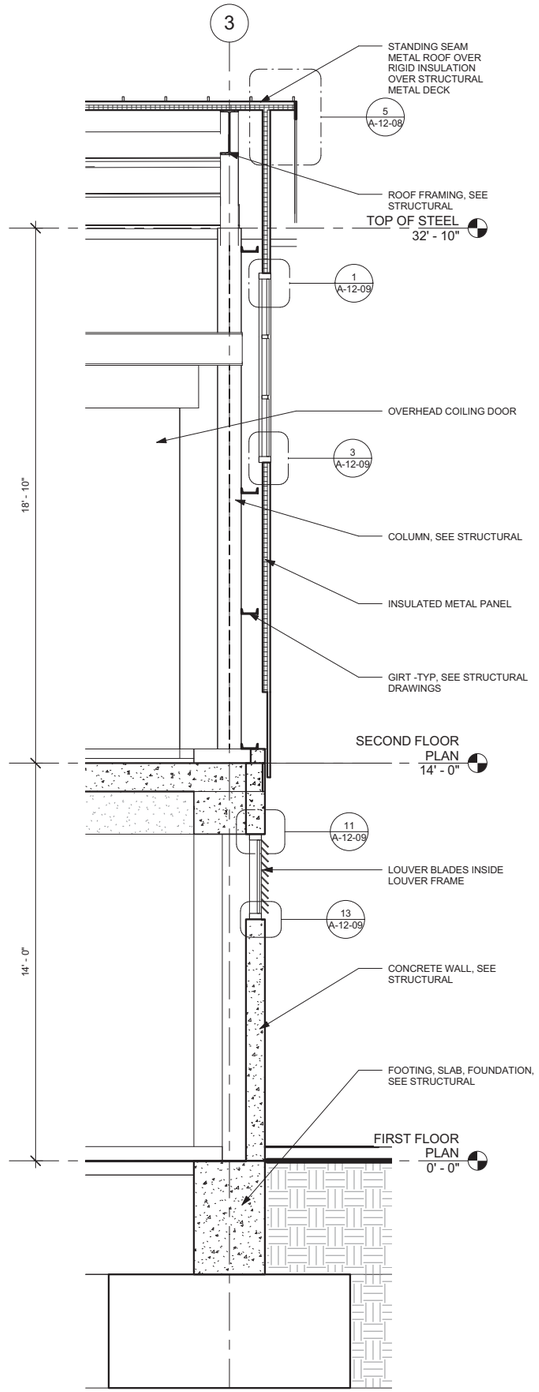

2 WALL SECTION AT RAKE
3/8" = 1'-0"

0' 3' 6' 9'
SCALE 3/8"=1'

DRAFT
NOT FOR
CONSTRUCTION

CH2MHILL®

NO.	DATE	DESCRIPTION	GM/SPEC	DWN	CHKD	SUPV	APVD BY
0	9/8/14	PRE-FINAL (90%) DESIGN		RV	RD	CH	AV

REVISIONS

APPROVED BY: SO
SUPV
DSGN AV
DWN RV
CHKD RD
OK -
DATE 09/08/14
SCALES

TOPOCK GROUNDWATER REMEDIATION PROJECT
REMEDY PRODUCED WATER
CONDITIONING PLANT
WALL SECTIONS
GAS TRANSMISSION & DISTRIBUTION
PACIFIC GAS AND ELECTRIC COMPANY
SAN FRANCISCO, CALIFORNIA

MICROFILM
BILL OF MATL
DWG LIST
SUPSDS
SUPSD BY
SHEET NO. of SHEETS
A-12-06
REV 0

PLOT DATE: $PLOTDATE PLOT TIME: $PLOTTIME
FILENAME:

N1808

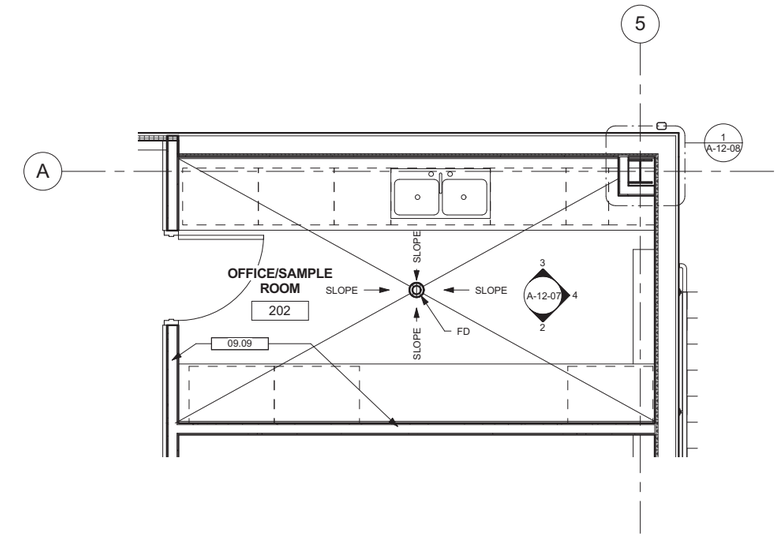

1 OFFICE / LAB
3/8" = 1'-0"

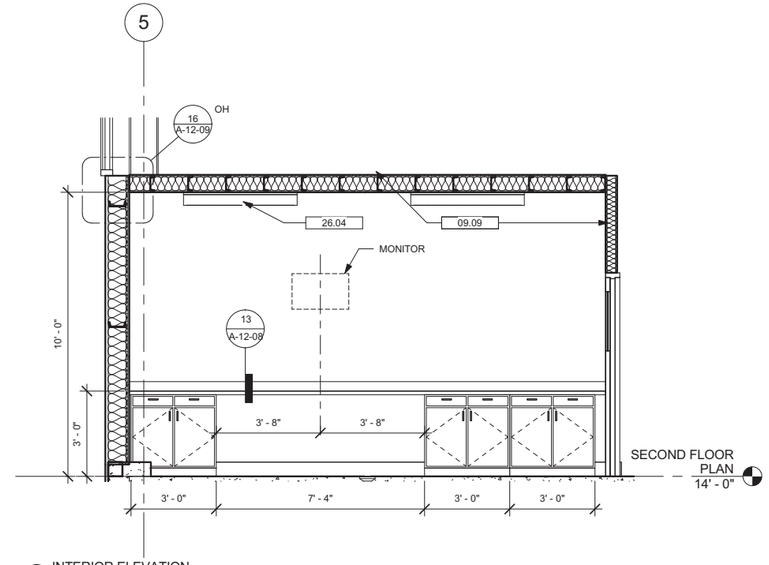

2 INTERIOR ELEVATION
3/8" = 1'-0"

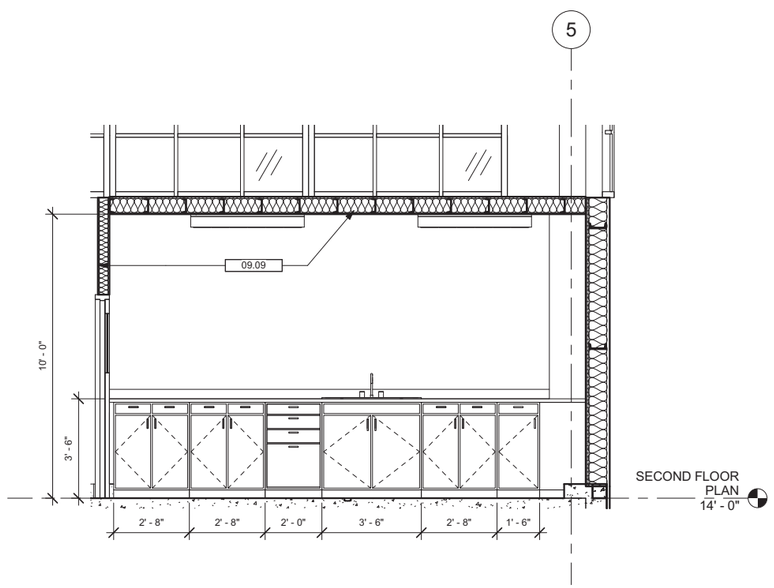

3 INTERIOR ELEVATION
3/8" = 1'-0"

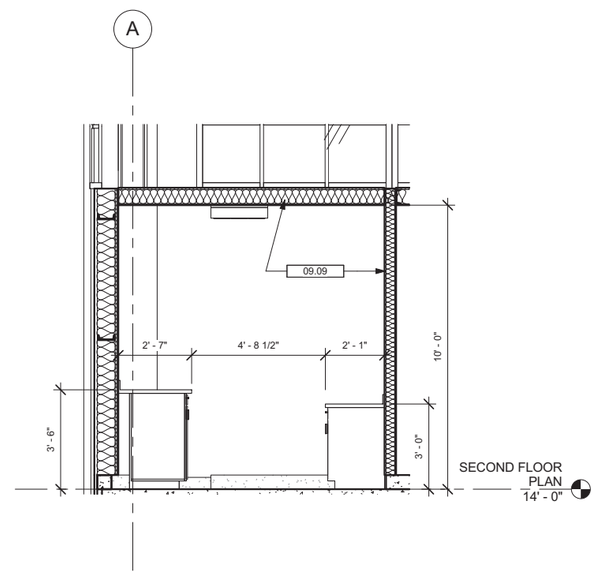

4 INTERIOR ELEVATION
3/8" = 1'-0"

GENERAL NOTES

KEYED NOTES XX.XX

09.09	NON-LOAD BEARING INSULATED METAL STUD ROOM ENCLOSURE
26.04	COORDINATE UTILITY CONNECTIONS WITH ELECTRICAL AND COMMUNICATION SCOPES OF WORK

N

0' 3' 6' 9'

SCALE 3/8"=1'

DRAFT
NOT FOR
CONSTRUCTION

CH2MHILL®

NO.	DATE	DESCRIPTION	GM/SPEC	DWN	CHKD	SUPV	APVD BY
0	9/8/14	PRE-FINAL (90%) DESIGN		RV	RD	CH	AV

REVISIONS

APPROVED BY
SO
SUPV
DSGN AV
DWN RV
CHKD RD
OK -
DATE 09/08/14
SCALES

TOPOCK GROUNDWATER REMEDIATION PROJECT
REMEDY PRODUCED WATER
CONDITIONING PLANT
ENLARGED PLANS & ELEVATIONS
GAS TRANSMISSION & DISTRIBUTION
PACIFIC GAS AND ELECTRIC COMPANY
SAN FRANCISCO, CALIFORNIA

MICROFILM
BILL OF MATL
DWG LIST
SUPSDS
SUPSD BY
SHEET NO. of SHEETS
A-12-07
REV 0

PLOT DATE: $PLOTDATE PLOT TIME: $PLOTTIME

FILENAME:

N1808

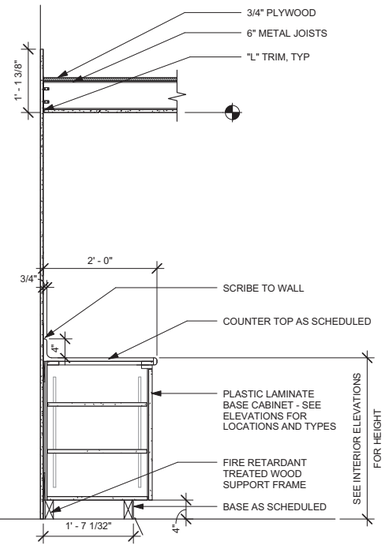

14 MILLWORK - BASE (NO BULKHEAD)
3/4" = 1'-0"

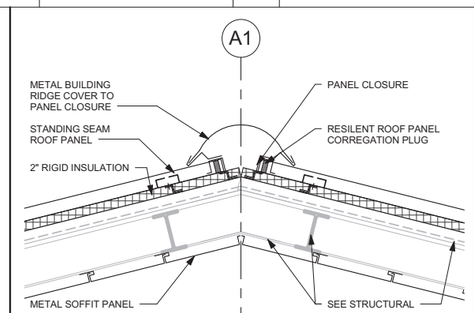

6 ROOF RIDGE @ EAVE
1" = 1'-0"

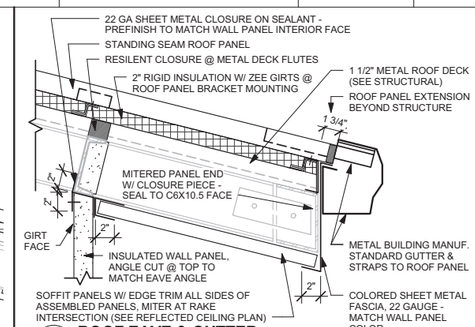

4 ROOF EAVE & GUTTER
1 1/2" = 1'-0"

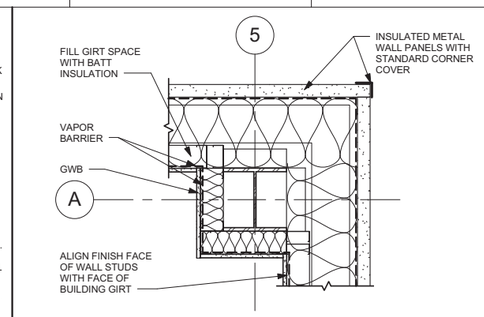

1 GRID A/5 WALL CONSTRUCTION
1" = 1'-0"

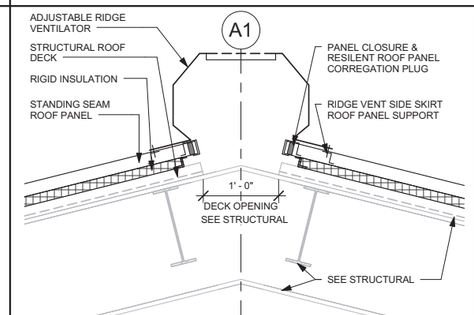

7 ROOF RIDGE @ VENTILATOR
1" = 1'-0"

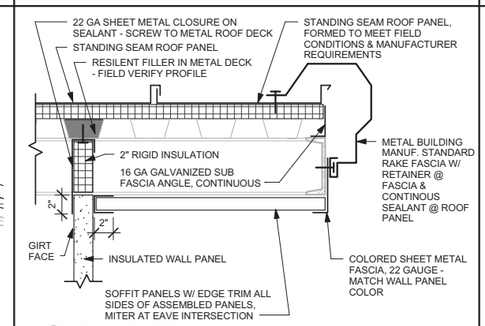

5 ROOF RAKE
1 1/2" = 1'-0"

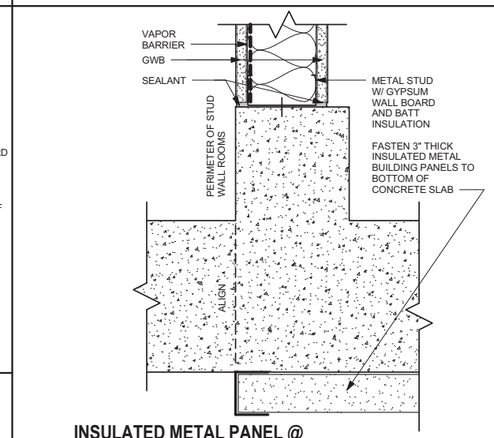

2 INSULATED METAL PANEL @ SLAB
3" = 1'-0"

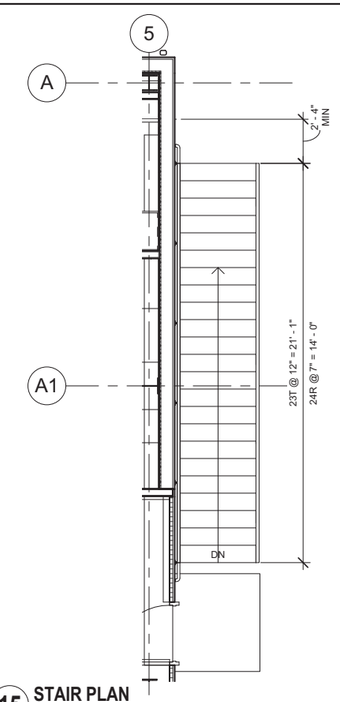

15 STAIR PLAN
1/4" = 1'-0"

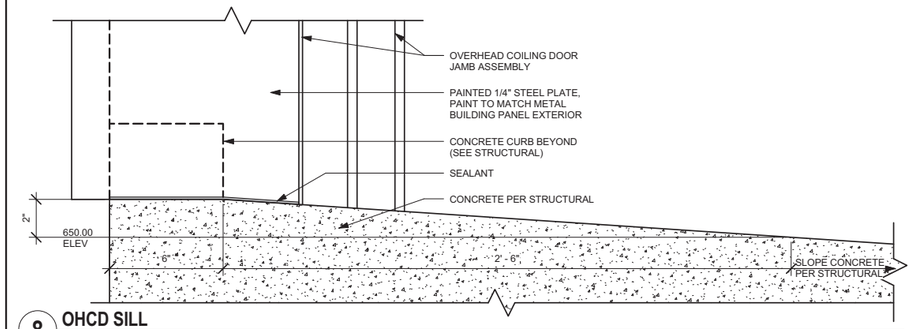

8 OHCD SILL
3" = 1'-0"

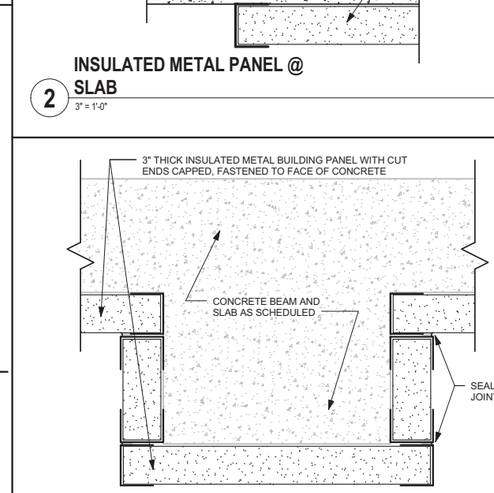

3 INSULATED METAL PANEL @ BEAM
3" = 1'-0"

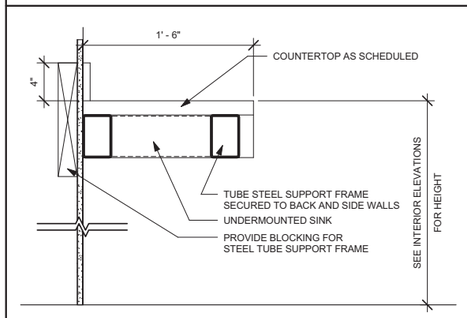

13 COUNTERTOP DETAIL
1 1/2" = 1'-0"

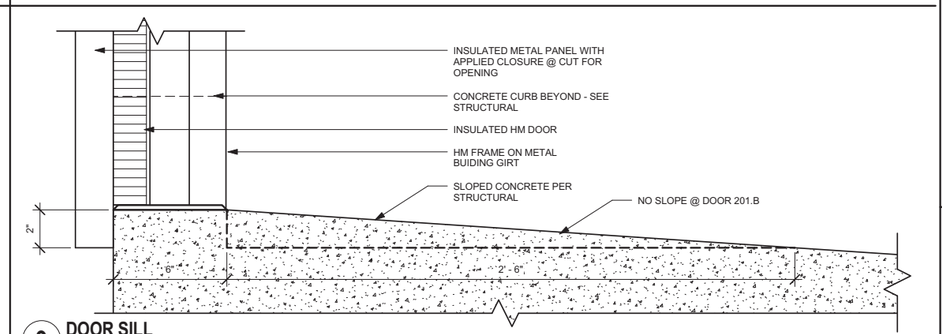

9 DOOR SILL
3" = 1'-0"

0' 1' 2'
SCALE 1 1/2"=1'

DRAFT
NOT FOR
CONSTRUCTION

CH2MHILL®

NO.	DATE	DESCRIPTION	GM/SPEC	DWN	CHKD	SUPV	APVD BY
0	9/8/14	PRE-FINAL (90%) DESIGN		RV	RD	CH	AV

REVISIONS

APPROVED BY	SO
	SUPV
	DSGN AV
	DWN RV
	CHKD RD
	OK -
	DATE 09/08/14
	SCALES

TOPOCK GROUNDWATER REMEDIATION PROJECT
REMEDY PRODUCED WATER CONDITIONING PLANT
STAIR & DETAILS
GAS TRANSMISSION & DISTRIBUTION
PACIFIC GAS AND ELECTRIC COMPANY
SAN FRANCISCO, CALIFORNIA

MICROFILM	
BILL OF MATL	
DWG LIST	
SUPSDS	
SUPSD BY	
SHEET NO. of SHEETS	
A-12-08	REV 0

FILENAME:
PLOT DATE: $PLOTDATE PLOT TIME: $PLOTTIME
N1808

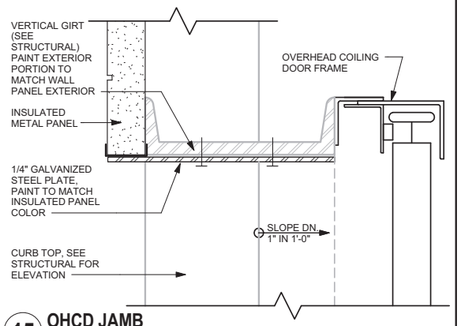

15 OHCD JAMB
3" = 1'-0"

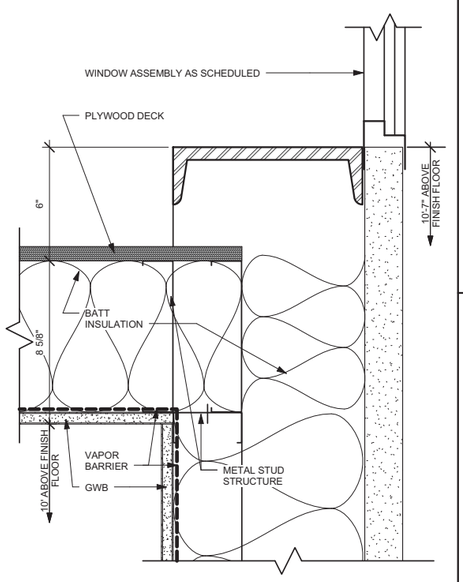

16 WINDOW SILL @ STUD WALL
3" = 1'-0"

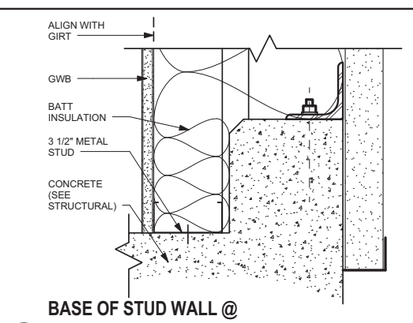

17 BASE OF STUD WALL @ EXTERIOR
3" = 1'-0"

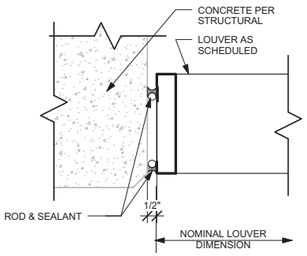

12 LOUVER JAMB @ CONCRETE
3" = 1'-0"

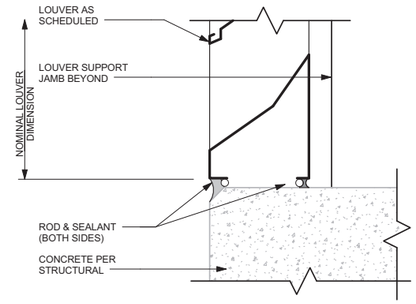

13 LOUVER SILL @ CONCRETE
3" = 1'-0"

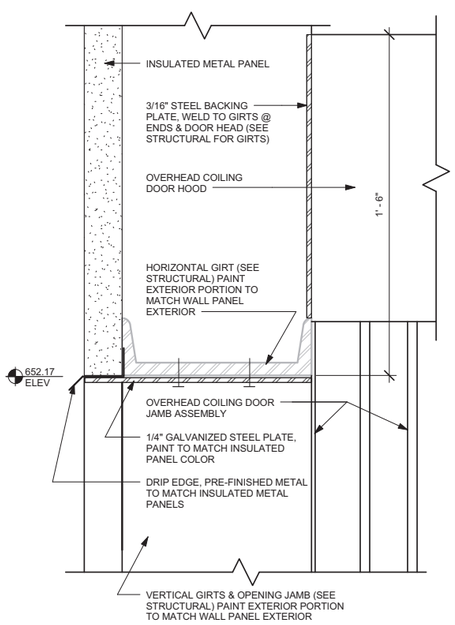

14 OHCD HEAD
3" = 1'-0"

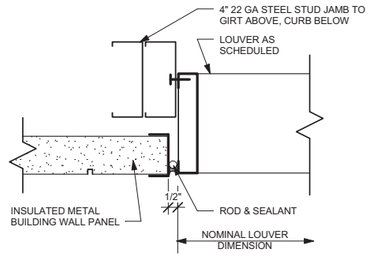

9 LOUVER JAMB @ PANEL
3" = 1'-0"

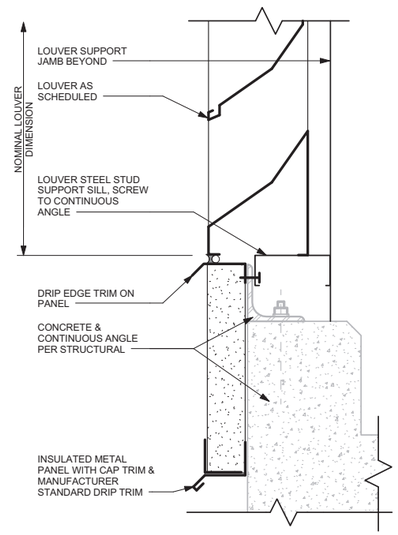

10 LOUVER SILL @ PANEL
3" = 1'-0"

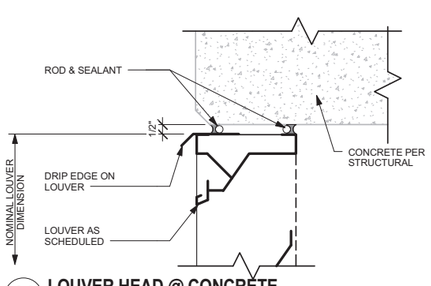

11 LOUVER HEAD @ CONCRETE
3" = 1'-0"

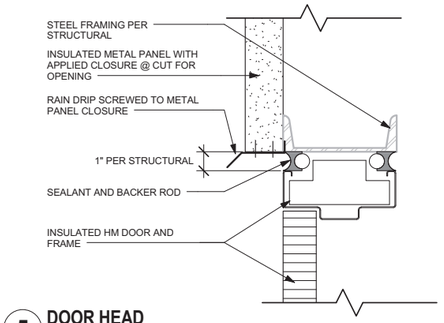

5 DOOR HEAD
3" = 1'-0"

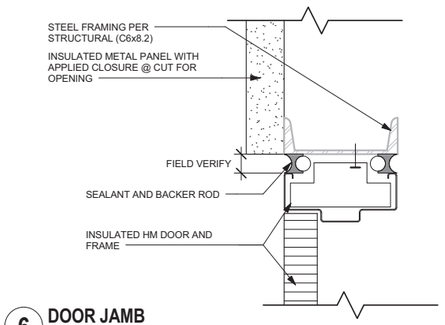

6 DOOR JAMB
3" = 1'-0"

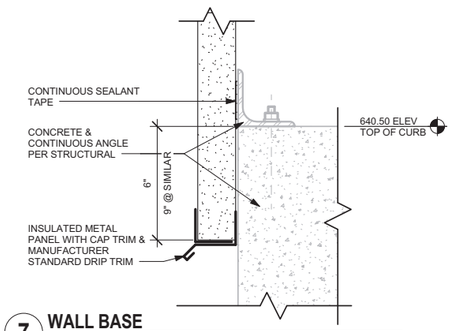

7 WALL BASE
3" = 1'-0"

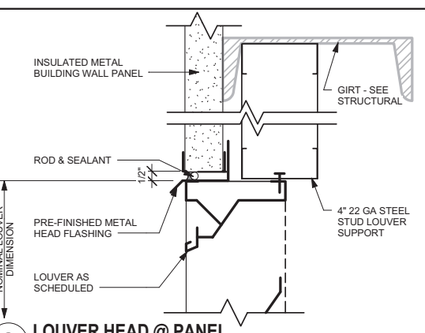

8 LOUVER HEAD @ PANEL
3" = 1'-0"

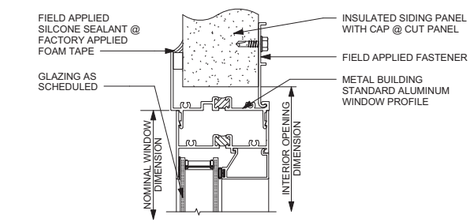

1 HEAD
6" = 1'-0"

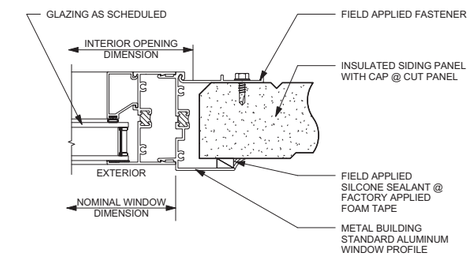

2 JAMB
6" = 1'-0"

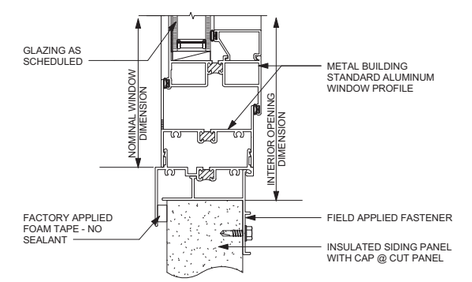

3 SILL
6" = 1'-0"

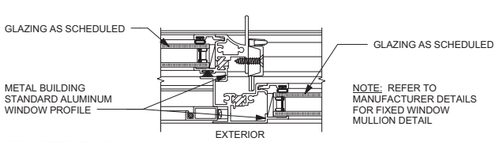

NOTE: REFER TO MANUFACTURER DETAILS FOR FIXED WINDOW MULLION DETAIL

4 MTG RAIL
6" = 1'-0"

0' 6" 1'
SCALE 3"=1'

0" 3" 6"
SCALE 6"=1'

DRAFT
NOT FOR
CONSTRUCTION

CH2MHILL®

NO.	DATE	DESCRIPTION	GM/SPEC	DWN	CHKD	SUPV	APVD BY
0	9/8/14	PRE-FINAL (90%) DESIGN		RV	RD	CH	AV

REVISIONS

APPROVED BY: SO; SUPV; DSGN AV; DWN RV; CHKD RD; OK -; DATE 09/08/14; SCALES

TOPOCK GROUNDWATER REMEDIATION PROJECT
REMEDY PRODUCED WATER CONDITIONING PLANT
DETAILS
GAS TRANSMISSION & DISTRIBUTION
PACIFIC GAS AND ELECTRIC COMPANY
SAN FRANCISCO, CALIFORNIA

MICROFILM; BILL OF MATL; DWG LIST; SUPSDS; SUPSD BY; SHEET NO. of SHEETS

A-12-09 REV 0

FILENAME: PLOT DATE: $PLOTDATE PLOT TIME: $PLOTTIME

N1808

STANDARD MOUNTING HEIGHTS

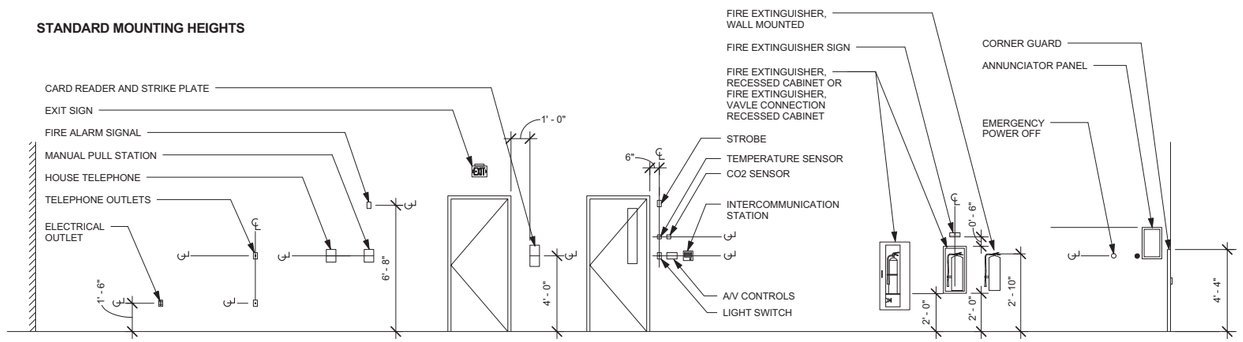

TYPICAL CORRIDOR/AISLE FIXTURES - STANDARD MOUNTING HEIGHTS

ROOM FINISH SCHEDULE

ROOM NUMBER	ROOM NAME	ROOM AREA	FLOORS MATERIAL	FLOORS FINISH	FLOORS BASE	WALLS NORTH WALL MATERIAL	WALLS NORTH WALL FINISH	WALLS SOUTH WALL MATERIAL	WALLS SOUTH WALL FINISH	WALLS WEST WALL MATERIAL	WALLS WEST WALL FINISH	WALLS EAST WALL MATERIAL	WALLS EAST WALL FINISH	CEILINGS MATERIAL	CEILINGS FINISH	COMMENTS
101	CHEMICAL STORAGE	712 SF	CONC	CRC-1	CRC-1	CONC	SEAL	CONC	SEAL	CONC		CONC	SEAL	CONC	EPOXY	1.,2.
102	LIQUID PHASE SEPARATORS	935 SF	CONC	CRC-1	CRC-1	N/A	N/A	CONC	SEAL	CONC		CONC	SEAL	CONC/MTL	EPOXY/FAC	1.,2.
103	DECON PAD	1565 SF	CONC	CRC-1	CRC-1	N/A	N/A	CONC	SEAL	CONC	SEAL	CONC/CMU	SEAL	N/A	N/A	1.,2., INSUL PNL @ PORTION
201	REMEDY PRODUCED WATER CONDITIONING	1423 SF	CONC	CRC-1	CRC-1	MTL PNL	FAC	MTL PNL	FAC	MTL PNL	FAC	WRGWB	FAC/EPOXY	GALV MTL	FAC	1.,2.
202	OFFICE/SAMPLE ROOM	155 SF	CONC	SEALED	SEAL/BASE	WRGWB	EPOXY	WRGWB	EPOXY	WRGWB	EPOXY	WRGWB	EPOXY	WRGWB	EPOXY	2., BASE @ GYP TO FLOOR
203	MCC	204 SF	CONC	SEALED	SEAL/BASE	WRGWB	EPOXY	WRGWB	EPOXY	WRGWB	EPOXY	WRGWB	EPOXY	WRGWB	EPOXY	2., BASE @ GYP TO FLOOR

FINISH KEY SCHEDULE

Finish	Manufacturer	Color
BASE	4" RUBBER WALL BASE	BLACK
CRC-1	POLYUREA	
EPOXY	EPOXY PAINT	WHITE
FAC	FACTORY FINISH	WHITE
MTL PNL	PREFINISHED METAL PANEL	
SEAL	PENETRATING SILANE SEALER	
WRGWB	WATER RESISTANT GYPSUM BOARD	

1. CRC BASE TO EXTEND 6" UP ADJACENT WALL
2. P-10X REFERS TO PAINT SYSTEM LISTED IN SECTION 09 90 00, PNT-XXX REFERS TO PAINT SYSTEM LISTED IN SECTION 09 90 05

DOOR SCHEDULE

NUMBER	Location	SIZE WIDTH	SIZE HEIGHT	SIZE THICKNESS	DOOR TYPE	DOOR MATERIAL	DOOR Finish	FRAME TYPE	FRAME MATERIAL	FRAME FINISH	FRAME HEAD	FRAME JAMB	FIRE RATING	CARD READER	HARDWARE	GLASS	COMMENTS
201.A	WATER CONDITIONING	18' - 0"	12' - 0"	0' - 2"	OHC	STEEL	FACTORY	SEE A-12-09	STEEL	FACTORY	14/A-12-09	15/A-12-09	0 HR	NO	HW008	-	PERFORATED
201.B	WATER CONDITIONING	3' - 0"	7' - 0"	0' - 1 3/4"	N	HM	P-108	A	HM	P-108	2	4	0 HR	NO	HW006	G-2	
201.C	WATER CONDITIONING	3' - 0"	7' - 0"	0' - 1 3/4"	N	HM	P-108	A	HM	P-108	2	4	0 HR	NO	HW006	G-2	
202.A	OFFICE/LAB	3' - 0"	7' - 0"	0' - 1 3/4"	N	HM	P-108	A	HM	P-108	1	3	0 HR	NO	HW003	G-1	
203.A	MCC	6' - 0"	7' - 0"	0' - 2"	F/F	HM	P-108	A	HM	P-108	1	3	0 HR	NO	HW009	-	

HARDWARE GROUP	GROUP ITEMS
HW003	BUTT HINGES LOCKSET – F86 FUNCTION SILENCERS DOOR STOP
HW006	BUTT HINGES CLOSER LOCKSET - F82B FUNCTION DOOR SWEEP THRESHOLD WEATHERSTRIP
HW008	HARDWARE BY DOOR MANUFACTURER
HW009	BUTT HINGES PASSAGE SET - F75 FUNCTION MANUAL FLUSH BOLTS - 2 EACH, INACTIVE LEAF SILENCERS

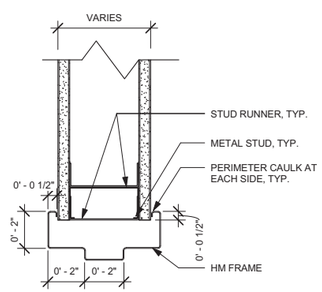

1 HEAD @ PARTITIONS
3" = 1'-0"

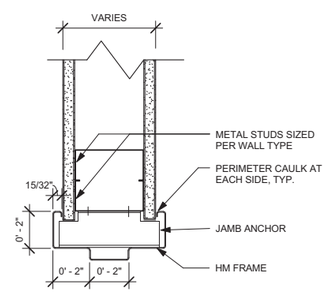

3 JAMB @ PARTITIONS
3" = 1'-0"

DOOR TYPES

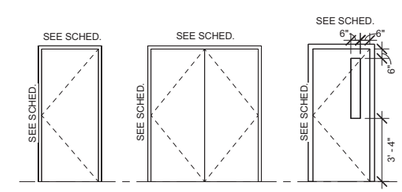

F
FLUSH

F/F
DOUBLE FLUSH

N
NARROW LIGHT

FRAME TYPES

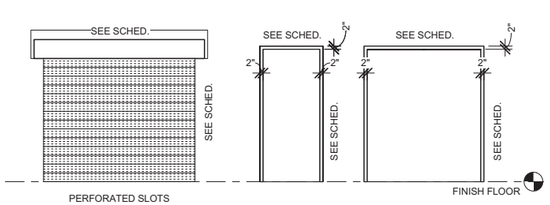

OH
OVERHEAD

A

A

CH2MHILL®

NO.	DATE	DESCRIPTION	GM/SPEC	DWN	CHKD	SUPV	APVD BY
0	9/8/14	PRE-FINAL (90%) DESIGN		RV	RD	CH	AV

REVISIONS

APPROVED BY: SO, SUPV, DSGN AV, DWN RV, CHKD RD, OK -, DATE 09/08/14, SCALES

TOPOCK GROUNDWATER REMEDIATION PROJECT
REMEDY PRODUCED WATER CONDITIONING PLANT
SCHEDULES
GAS TRANSMISSION & DISTRIBUTION
PACIFIC GAS AND ELECTRIC COMPANY
SAN FRANCISCO, CALIFORNIA

MICROFILM
BILL OF MATL
DWG LIST
SUPSDS
SUPSD BY
SHEET NO. of SHEETS
A-12-10
REV 0

FILENAME:
PLOT DATE: $PLOTDATE PLOT TIME: $PLOTTIME

N1808

KEY NOTES:

1. CONSTRUCTION JOINT WITH PVC WATERSTOP, SEE DET. 2, DWG S-00-02.
2. WALL VERTICAL CONSTRUCTION JOINT WITH PVC WATERSTOP, SEE DET 3, DWG S-00-02.
3. CORNER REINFORCING, SEE DETAIL 5, DWG S-00-02.
4. ELEVATIONS SHOWN ARE AT TOP OF CONCRETE FILL.
5. FOR FOUNDATION REINF. SEE DWG. S-12-18.
6. FOOTING NOT REQUIRED IN THIS AREA.

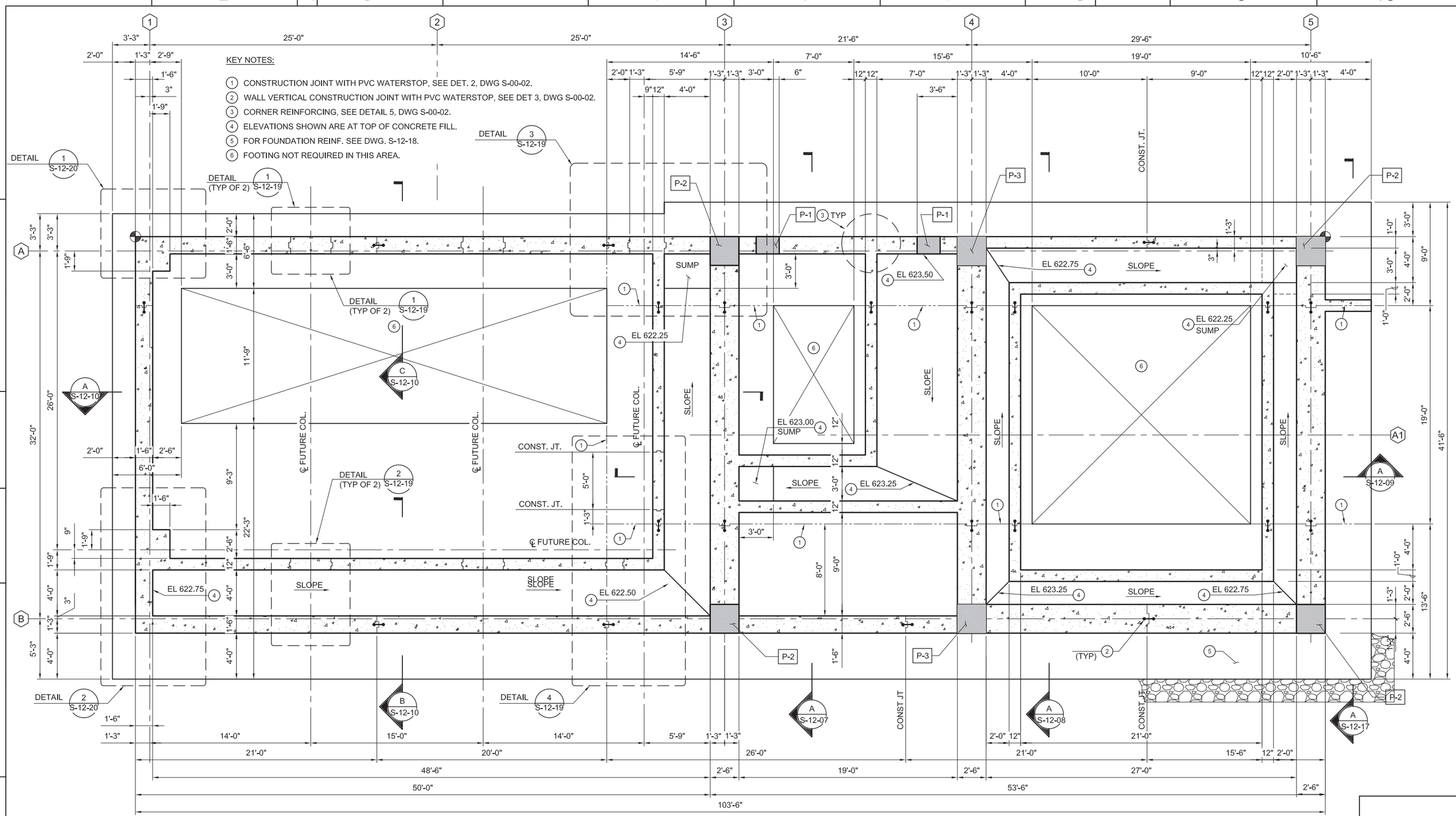

NOTES:

1. FOR GENERAL STRUCTURAL NOTES, SEE DWG S-00-01.
2. P- INDICATES PILASTER, FOR PILASTER SCHEDULE, SEE DWG S-12-15.
3. FOR COORDINATES, SEE DWG. C-10-08.

FOUNDATION PLAN

1/4" = 1'-0"

DRAFT
NOT FOR
CONSTRUCTION

E2 Consulting Engineers, Inc.
1900 Powell Street, Ste. 250
Emeryville, CA 94608
(510) 652-1164

CH2MHILL®

NO.	DATE	DESCRIPTION	GM/SPEC	DWN	CHKD	SUPV	APVD BY
1	09/08/14	PRE-FINAL 90%) DESIGN		MD	KJ	VMB	VMB
0	04/05/13	INTERMEDIATE (60%) DESIGN		MD	KJ	VMB	VMB

REVISIONS

APPROVED BY
ISO
SUPV VMB
DSGN KDD
DWN WTH/ MD
CHKD KJ
OK VWB
DATE 6/30/14
SCALES AS NOTED

TOPOCK GROUNDWATER REMEDIATION PROJECT
REMEDY - PRODUCED WATER CONDITIONING PLANT
FOUNDATION PLAN
GAS TRANSMISSION & DISTRIBUTION
PACIFIC GAS AND ELECTRIC COMPANY
SAN FRANCISCO, CALIFORNIA

MICROFILM
BILL OF MATL
DWG LIST
SUPSDS
SUPSD BY
SHEET NO. of SHEETS
S-12-01
REV 1

PLOT DATE: $PLOTDATE PLOT TIME: $PLOTTIME
FILENAME: E2-S-XXX-1201.dwg

N1808

KEY NOTES:

1. TOP OF 3"x1/4" DEEP GALVANIZED STEEL GRATING (TYPE W-15-4,MANUFACTURED BY GRATING PACIFIC INC) EL 626.00.
2. TOP OF 3" DEEP (HI4730) FRP FIBERGRATE GRATING EL 626.00.
3. EP - INDICATES EQUIPMENT PAD, SEE DET 10, DWG S-00-02.
4. GRATING SUPPORT L, SEE DETAIL 1, DWG S-00-04.
5. GRATING SUPPORT CHANNEL C9X13.4, SEE DETAIL 2, DWG S-00-04.
6. GUIDE CHANNELS, SEE DETAIL 3, DWG S-00-04.
7. CONST. JT. W/ PVC WATERSTOP. SEE DETAIL 2 ON DWG. S-00-02.

NOTES:

1. FOR GENERAL STRUCTURAL NOTES, SEE DWG S-00-01.
2. P- INDICATES PILASTER, FOR PILASTER SCHEDULE, SEE DWG S-12-15.
3. * DIMENSIONS MARKED WITH AN ASTERISK SHALL BE VERIFIED WITH APPROVED SUBMITTALS.

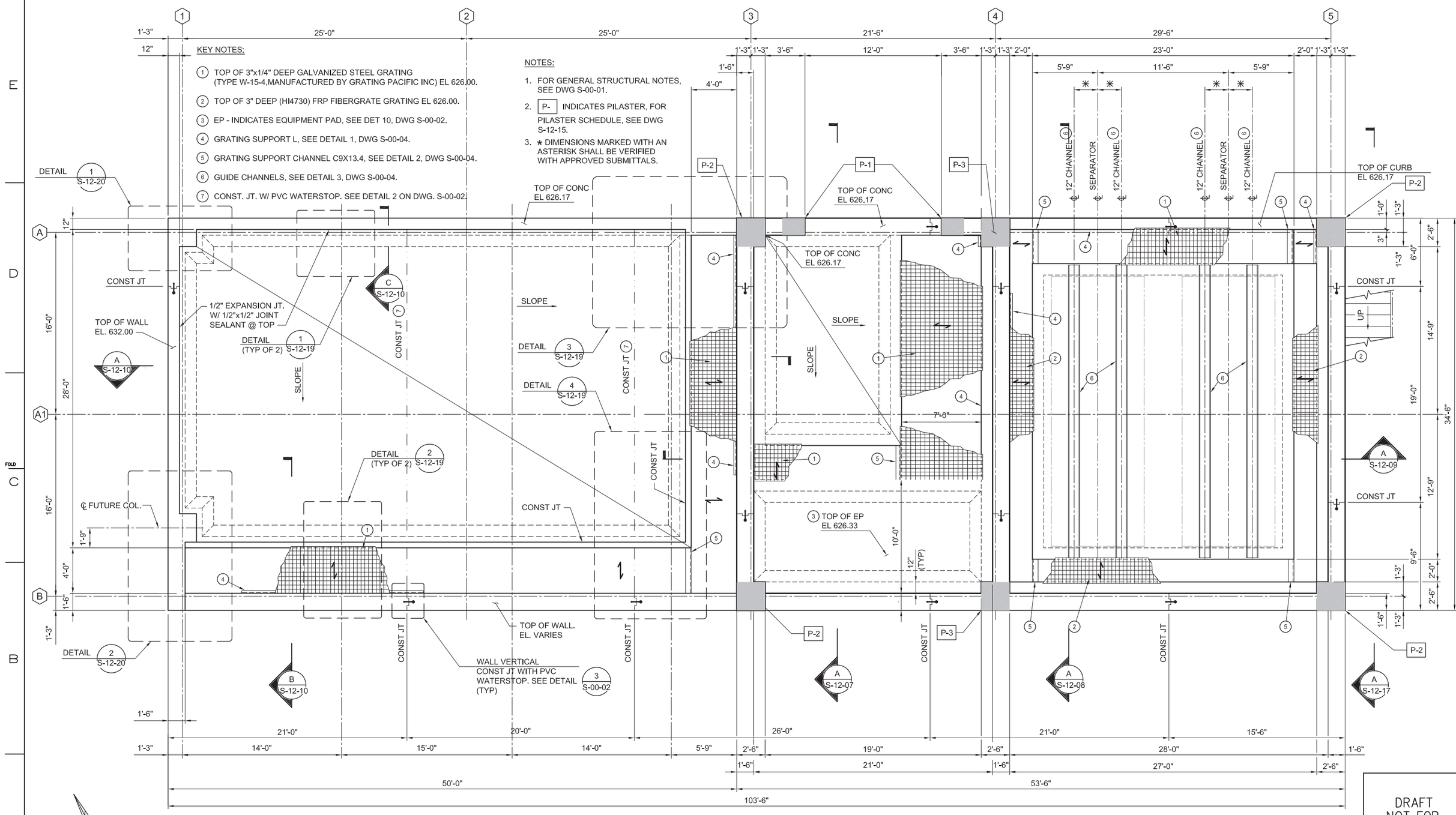

FIRST FLOOR PLAN

1/4" = 1'-0"

DRAFT NOT FOR CONSTRUCTION

E2 Consulting Engineers, Inc.
1900 Powell Street, Ste. 250
Emeryville, CA 94608
(510) 652-1164

CH2MHILL®

NO.	DATE	DESCRIPTION	GM/SPEC	DWN	CHKD	SUPV	APVD BY
1	09/08/14	PRE-FINAL (90%) DESIGN		MD	KJ	VMB	VMB
0	04/05/13	INTERMEDIATE (60%) DESIGN		MD	KJ	VMB	VMB

REVISIONS

APPROVED BY
SO
SUPV VMB
DSGN KDD
DWN WTH/MD
CHKD KJ
OK VMB
DATE 6/30/14
SCALES 1/4"=1'-0"

TOPOCK GROUNDWATER REMEDIATION PROJECT
REMEDY - PRODUCED WATER CONDITIONING PLANT
FIRST FLOOR PLAN
GAS TRANSMISSION & DISTRIBUTION
PACIFIC GAS AND ELECTRIC COMPANY
SAN FRANCISCO, CALIFORNIA

MICROFILM
BILL OF MATL
DWG LIST
SUPSDS
SUPSD BY
SHEET NO. S-12-02 of SHEETS
REV 1

FILENAME: E2-S-XXX-1202.dwg
PLOT DATE: $PLOTDATE PLOT TIME: $PLOTTIME

N1808

KEY NOTES:

1. TOP OF CURB EL 640.50 UNLESS NOTED OTHERWISE.
2. EP-1 AND EP-2, TOP OF CONCRETE EL 640.33, SEE DETAIL 10, DWG S-00-02.
3. FD - INDICATES FLOOR DRAIN, TOP AT EL 639.83 LOCATION PER MECHANICAL DWG M-12-XX.
4. TOP OF PERIMETER CURB AT EL 640.50 UNLESS OTHERWISE NOTED. SEE DETAIL 4 ON DWG. S-12-11.
5. FOR STAIR DETAILS SEE DWG S-12-17.
6. ELEVATED SLAB CONSTRUCTION JOINT, SEE DETAIL 3, DWG S-00-02.
7. FOR BEAM VERTICAL CONSTRUCTION JOINT, SEE DETAIL 4, DWG S-00-04.
8. 13" DIA OPENING FOR 12" DUCT.
9. 21" x 21" x 6" HIGH CURB WITH 13" DIA OPENING FOR 12" DUCT, SEE DETAIL 6, DWG. S-00-04.
10. TOP MOUNTED HANDRAIL, SEE DETAIL 1, DWG S-00-03.

NOTES:

1. FOR BEAM SCHEDULE SEE DWG S-12-15.
2. FOR PIPE PENETRATIONS, SEE M- DWGS.

* DIMENSIONS MARKED WITH AN ASTERISK SHALL BE VERIFIED WITH THE MANUFACTURER'S APPROVED SUBMITTALS.

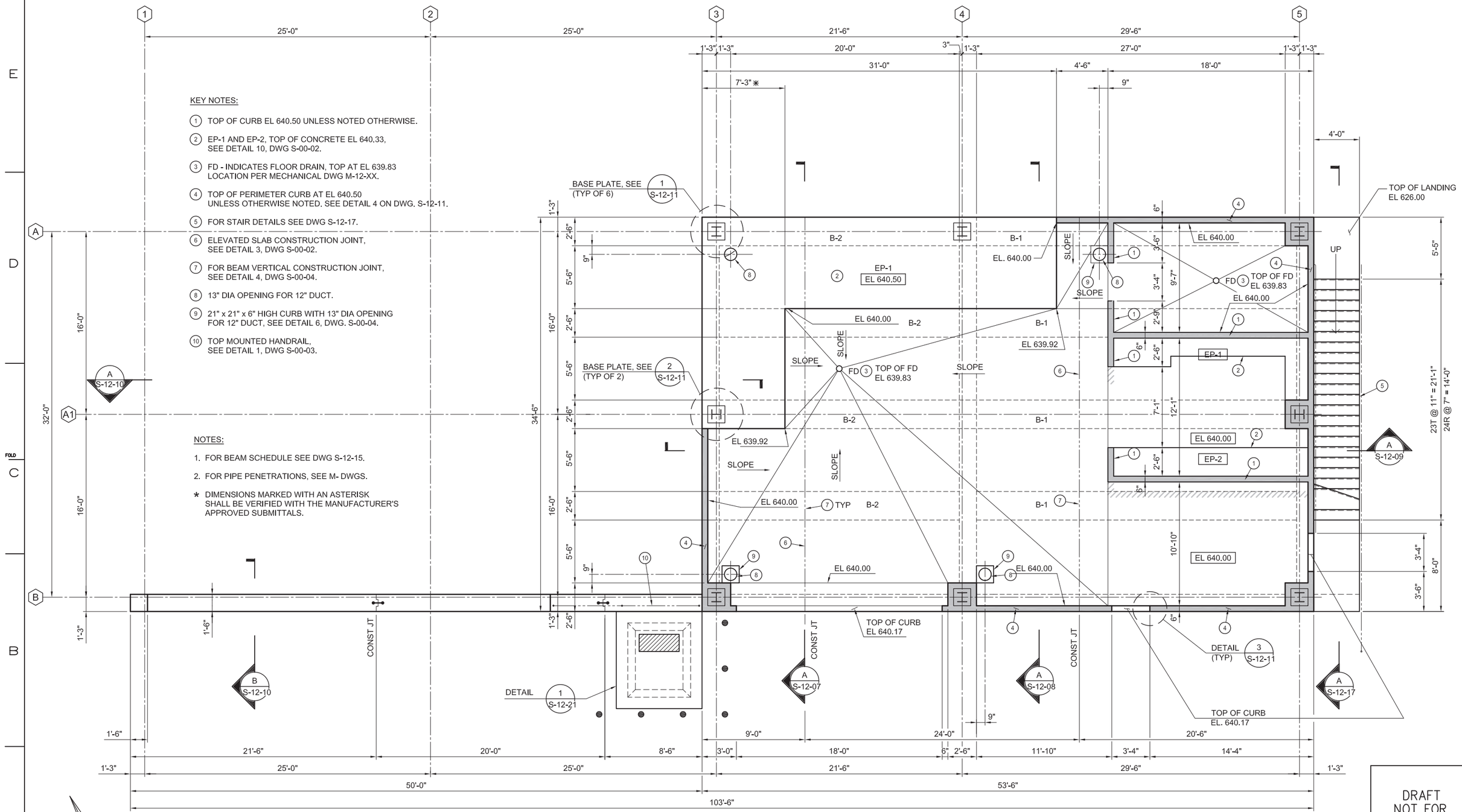

SECOND FLOOR PLAN

1/4" = 1'-0"

DRAFT NOT FOR CONSTRUCTION

E2 Consulting Engineers, Inc.
1900 Powell Street, Ste. 250
Emeryville, CA 94608
(510) 652-1164

CH2MHILL®

NO.	DATE	DESCRIPTION	GM/SPEC	DWN	CHKD	SUPV	APVD BY
1	09/08/14	PRE-FINAL (90%) DESIGN		MD	KJ	VMB	VMB
0	04/05/13	INTERMEDIATE (60%) DESIGN		MD	KJ	VMB	VMB

REVISIONS

APPROVED BY
SO
SUPV VMB
DSGN KDD
DWN WTH/MD
CHKD
OK VMB
DATE 6/30/14
SCALES 1/4"=1'-0"

TOPOCK GROUNDWATER REMEDIATION PROJECT
REMEDY - PRODUCED WATER CONDITIONING PLANT
SECOND FLOOR PLAN
GAS TRANSMISSION & DISTRIBUTION
PACIFIC GAS AND ELECTRIC COMPANY
SAN FRANCISCO, CALIFORNIA

MICROFILM
BILL OF MATL
DWG LIST
SUPSDS
SUPSD BY
SHEET NO. of SHEETS
S-12-03
REV 1

PLOT DATE: $PLOTDATE PLOT TIME: $PLOTTIME
FILENAME: E2-S-XXX-1203.dwg

KEY NOTES:

1. FOR CONNECTION DETAILS, SEE SECTION B ON DWG S-12-12.
2. FOR CONNECTION DETAILS, SEE SECTION C ON DWG S-12-12.
3. FOR CONNECTION DETAILS, SEE SECTION A ON DWG S-12-13.
4. FOR CONNECTION DETAILS, SEE SECTION B ON DWG S-12-13.
5. METAL ROOF DECK. SEE DWG. S-00-01.
6. FOR W12x40 CONNECTIONS. SEE DETAIL 2 DWG. S-12-14.
7. RIDGE VENT, SEE ARCHITECTURAL DRAWINGS.

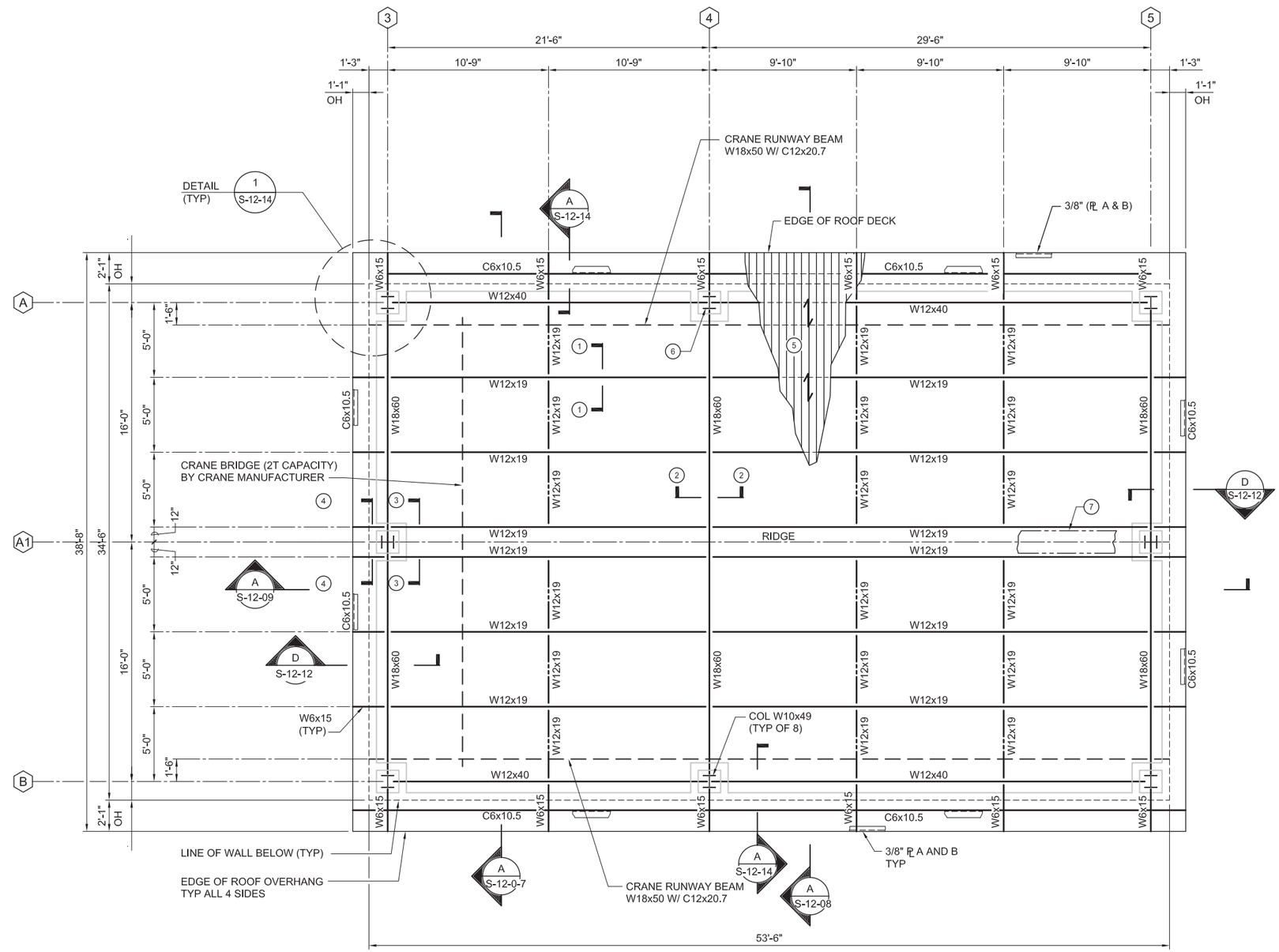

ROOF FRAMING PLAN

1/4" = 1'-0"

DRAFT
NOT FOR
CONSTRUCTION

E2 Consulting Engineers, Inc.
1900 Powell Street, Ste. 250
Emeryville, CA 94608
(510) 652-1164

CH2MHILL®

NO.	DATE	DESCRIPTION	GM/SPEC	DWN	CHKD	SUPV	APVD BY
1	09/08/14	PRE-FINAL (90%) DESIGN		MD	KJ	VMB	VMB
0	04/05/13	INTERMEDIATE (60%) DESIGN		MD	KJ	VMB	VMB

REVISIONS

APPROVED BY
SO
SUPV VMB
DSGN KDD
DWN WTH/MD
CHKD KJ
OK VMB
DATE 6/30/14
SCALES 1/4"=1'-0"

TOPOCK GROUNDWATER REMEDIATION PROJECT
REMEDY - PRODUCED WATER CONDITIONING PLANT
ROOF FRAMING PLAN
GAS TRANSMISSION & DISTRIBUTION
PACIFIC GAS AND ELECTRIC COMPANY
SAN FRANCISCO, CALIFORNIA

MICROFILM
BILL OF MATL
DWG LIST
SUPSDS
SUPSD BY
SHEET NO. of SHEETS
S-12-04
REV 1

PLOT DATE: $PLOTDATE PLOT TIME: $PLOTTIME
FILENAME: E2-S-XXX-1204.dwg

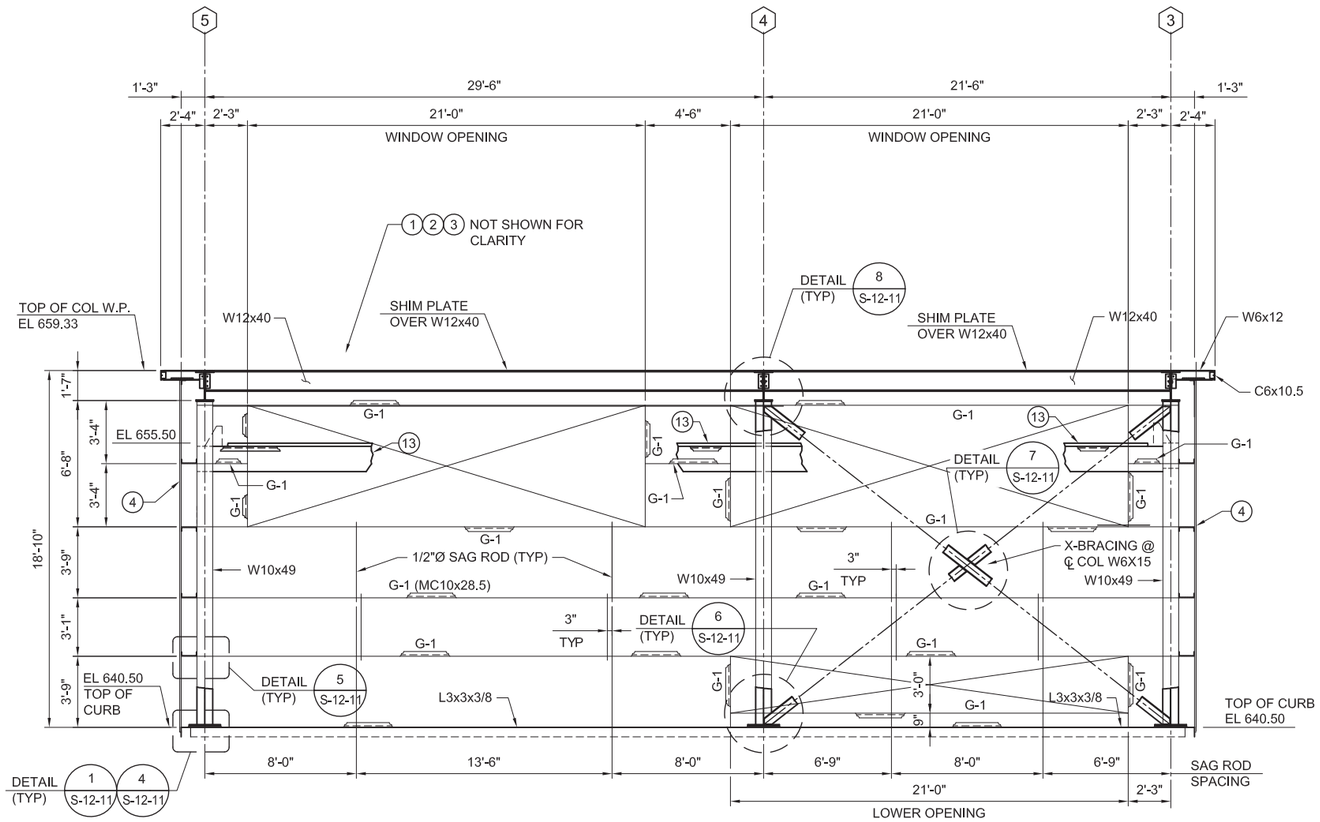

STRUCTURAL FRAMING ELEVATION @ COL (A)

1/4" = 1'-0"

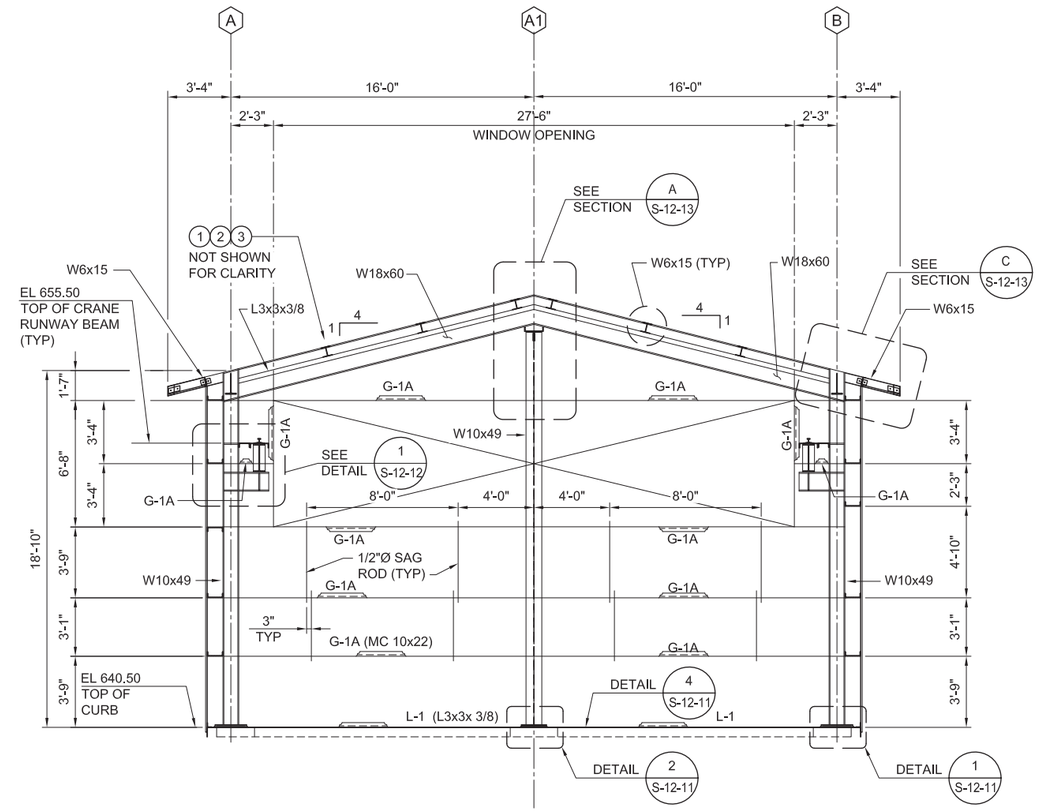

STRUCTURAL FRAMING ELEVATION @ COL LINE (3)

1/4" = 1'-0"

KEY NOTES:

1. METAL STANDING SEAM ROOF.
2. 2" RIGID INSULATION
3. 1 1/2" METAL ROOF DECK
4. INSULATED METAL SIDING
13. CRANE RUNWAY BEAM.

DRAFT
NOT FOR
CONSTRUCTION

E2 Consulting Engineers, Inc.
1900 Powell Street, Ste. 250
Emeryville, CA 94608
(510) 652-1164

CH2MHILL®

NO.	DATE	DESCRIPTION	GM/SPEC	DWN	CHKD	SUPV	APVD BY
1	09/08/14	PRE-FINAL (90%) DESIGN		MD	KJ	VMB	VMB
0	04/05/14	INTERMEDIATE (60%) DESIGN		MD	KJ	VMB	VMB

REVISIONS

APPROVED BY
SO
SUPV VMB
DSGN KDD
DWN MD
CHKD KJ
OK VMB
DATE 6/30/14
SCALES 1/4"=1'-0"

TOPOCK GROUNDWATER REMEDIATION PROJECT
REMEDY - PRODUCED WATER CONDITIONING PLANT WALL FRAMING ELEVATIONS
GAS TRANSMISSION & DISTRIBUTION
PACIFIC GAS AND ELECTRIC COMPANY
SAN FRANCISCO, CALIFORNIA

MICROFILM
BILL OF MATL
DWG LIST
SUPSDS
SUPSD BY
SHEET NO. of SHEETS
S-12-05
REV 1

FILENAME: E2-S-XXX-1205.dwg
PLOT DATE: $PLOTDATE PLOT TIME: $PLOTTIME

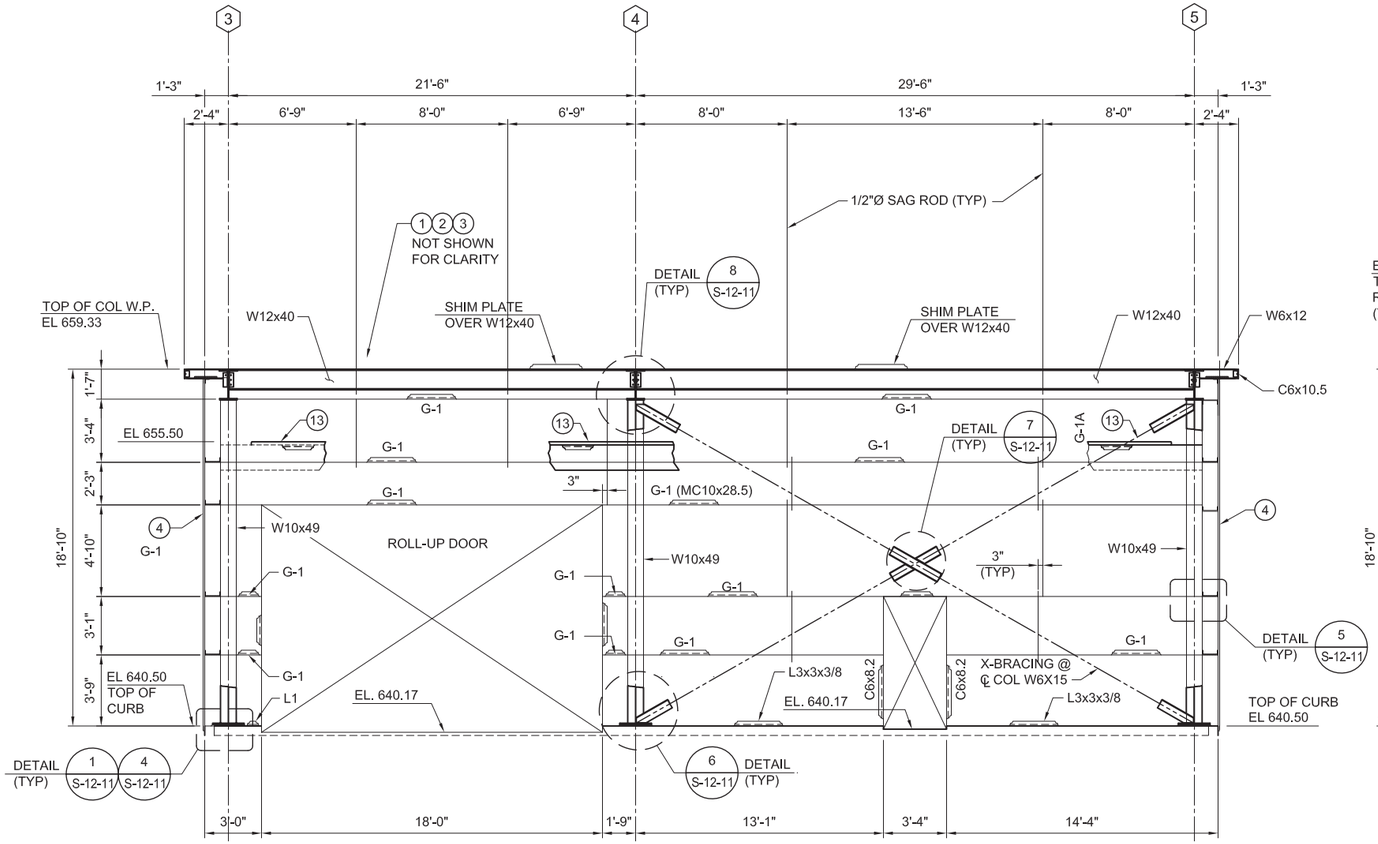

STRUCTURAL FRAMING ELEVATION @ COL (B)

1/4" = 1'-0"

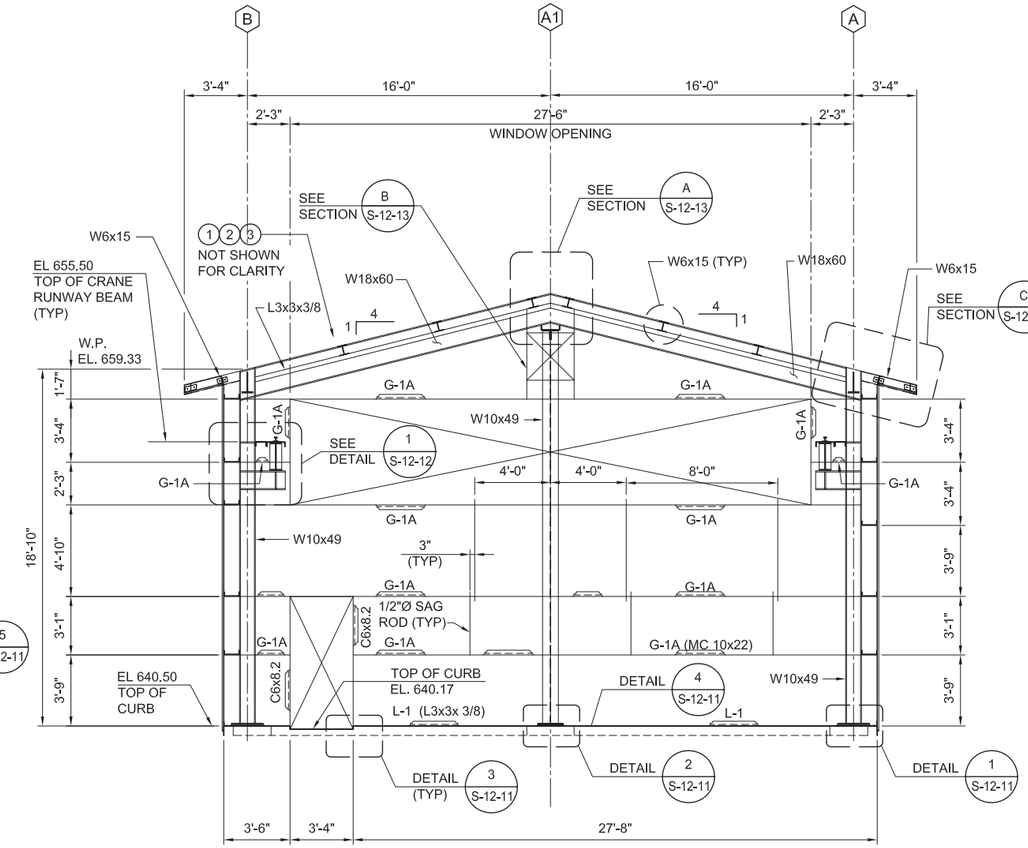

STRUCTURAL FRAMING ELEVATION @ COL LINE (5)

1/4" = 1'-0"

KEY NOTES:

1. METAL STANDING SEAM ROOF.
2. 2" RIGID INSULATION
3. 1 1/2" METAL ROOF DECK
4. INSULATED METAL SIDING
13. CRANE RUNWAY BEAM.

DRAFT
NOT FOR
CONSTRUCTION

E2 Consulting Engineers, Inc.
1900 Powell Street, Ste. 250
Emeryville, CA 94608
(510) 652-1164

CH2MHILL®

NO.	DATE	DESCRIPTION	GM/SPEC	DWN	CHKD	SUPV	APVD BY
1	09/08/14	PRE-FINAL (90%) DESIGN		MD	KJ	VMB	VMB
0	04/05/13	INTERMEDIATE (60%) DESIGN		MD	KJ	VMB	VMB

REVISIONS

APPROVED BY

SO	
SUPV	VMB
DSGN	KDD
DWN	MD
CHKD	KJ
OK	VMB
DATE	6/30/14
SCALES	1/4"=1'-0"

TOPOCK GROUNDWATER REMEDIATION PROJECT

REMEDY - PRODUCED WATER CONDITIONING PLANT WALL FRAMING ELEVATIONS

GAS TRANSMISSION & DISTRIBUTION
PACIFIC GAS AND ELECTRIC COMPANY
SAN FRANCISCO, CALIFORNIA

MICROFILM
BILL OF MATL
DWG LIST
SUPSDS
SUPSD BY
SHEET NO. of SHEETS
S-12-06
REV 1

PLOT DATE: $PLOTDATE PLOT TIME: $PLOTTIME
FILENAME: E2-S-XXX-1205.dwg

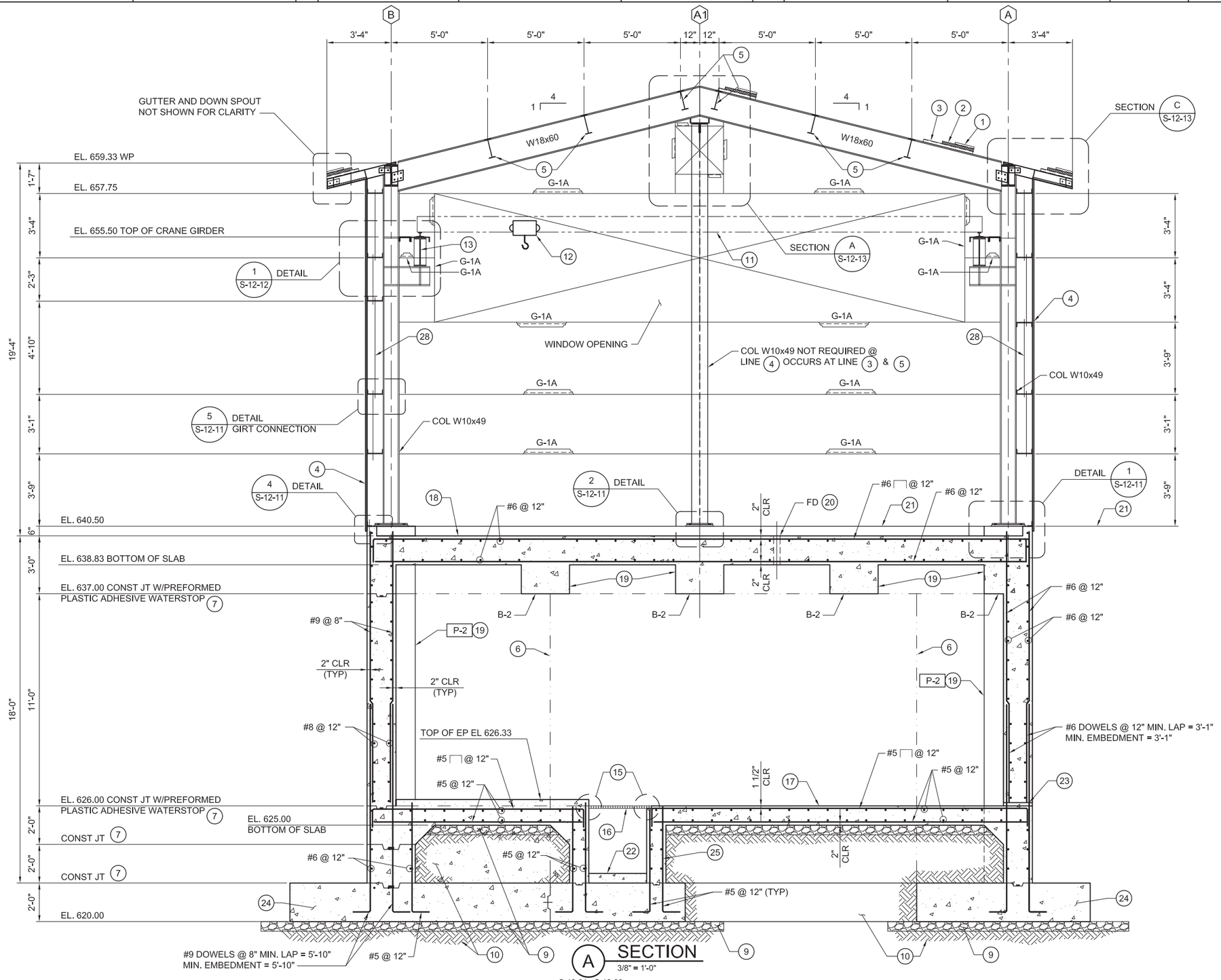

A SECTION
3/8" = 1'-0"
S-12-01 S-12-03
S-12-02 S-12-04

KEY NOTES:

1. METAL STANDING SEAM ROOF.
2. 2" RIGID INSULATION
3. 1 1/2" METAL ROOF DECK, SEE DWG. S-00-01.
4. INSULATED METAL SIDING
5. W12x19.
6. WALL VERTICAL CONST. JT., SEE DETAIL 3, DWG. S-00-02.
7. WALL HORIZONTAL CONST. JT., SEE DETAIL 1, DWG. S-00-02.
8. CONST. JT. WITHOUT WATERSTOP, SEE DETAIL 2, DWG. S-00-02.
9. 6" CRUSHED DRAIN ROCK. EXTEND MIN 2'-0" BEYOND FOOTING U.N.O.
10. STRUCTURAL FILL, 95% COMPACTION.
11. SINGLE CRANE BRIDGE, 2 TON CAPACITY, BY CRANE MANUFACTURER.
12. MOTOR OPERATED HOIST.
13. CRANE RUNWAY BEAM.
14. NOT USED.
15. GRATING SUPPORT DETAIL 1 ON DWG. S-00-04.
16. TOP OF GRATING EL. 626.00.
17. TOP OF FLOOR, EL. VARIES. SEE DWG. S-12-02.
18. TOP OF FLOOR, EL. VARIES. SEE DWG. S-12-03.
19. FOR BEAM AND PILASTER SCHEDULE, SEE DWG. S-12-15.
20. FD INDICATES FLOOR DRAIN. SEE DWG. S-12-03.
21. TOP OF EQUIPMENT PAD. EL. 640.50.
22. CONCRETE FILL, SEE DWG. S-12-01.
23. T.O.C. EL. 626.17, ROUND SURFACE BETWEEN 12'-0" WIDE OPENING.
24. FOR FOUNDATION REINFORCING, SEE DWG. S-12-16.
25. PROVIDE MINIMUM 1 1/2" CLR. COVER FOR VERTICAL BARS U.N.O.
28. 1/2"Ø SAG ROD @ ℄ GIRT.

DRAFT
NOT FOR
CONSTRUCTION

E2 Consulting Engineers, Inc.
1900 Powell Street, Ste. 250
Emeryville, CA 94608
(510) 652-1164

CH2MHILL®

NO.	DATE	DESCRIPTION	GM/SPEC	DWN	CHKD	SUPV	APVD BY
1	09/08/14	PRE-FINAL (90%) DESIGN		MD	KJ	VMB	VMB
0	04/05/13	INTERMEDIATE (60%) DESIGN		MD	KJ	VMB	VMB

REVISIONS

APPROVED BY
SO
SUPV VMB
DSGN KDD
DWN MD
CHKD KJ
OK VMB
DATE 6/30/14
SCALES 1/2"=1'-0"

TOPOCK GROUNDWATER REMEDIATION PROJECT
REMEDY - PRODUCED WATER CONDITIONING PLANT BUILDING SECTION
GAS TRANSMISSION & DISTRIBUTION
PACIFIC GAS AND ELECTRIC COMPANY
SAN FRANCISCO, CALIFORNIA

MICROFILM
BILL OF MATL
DWG LIST
SUPSDS
SUPSD BY
SHEET NO. S-12-07 of SHEETS
REV 1

FILENAME: E2-S-XXX-1207.dwg
PLOT DATE: $PLOTDATE PLOT TIME: $PLOTTIME
N1808

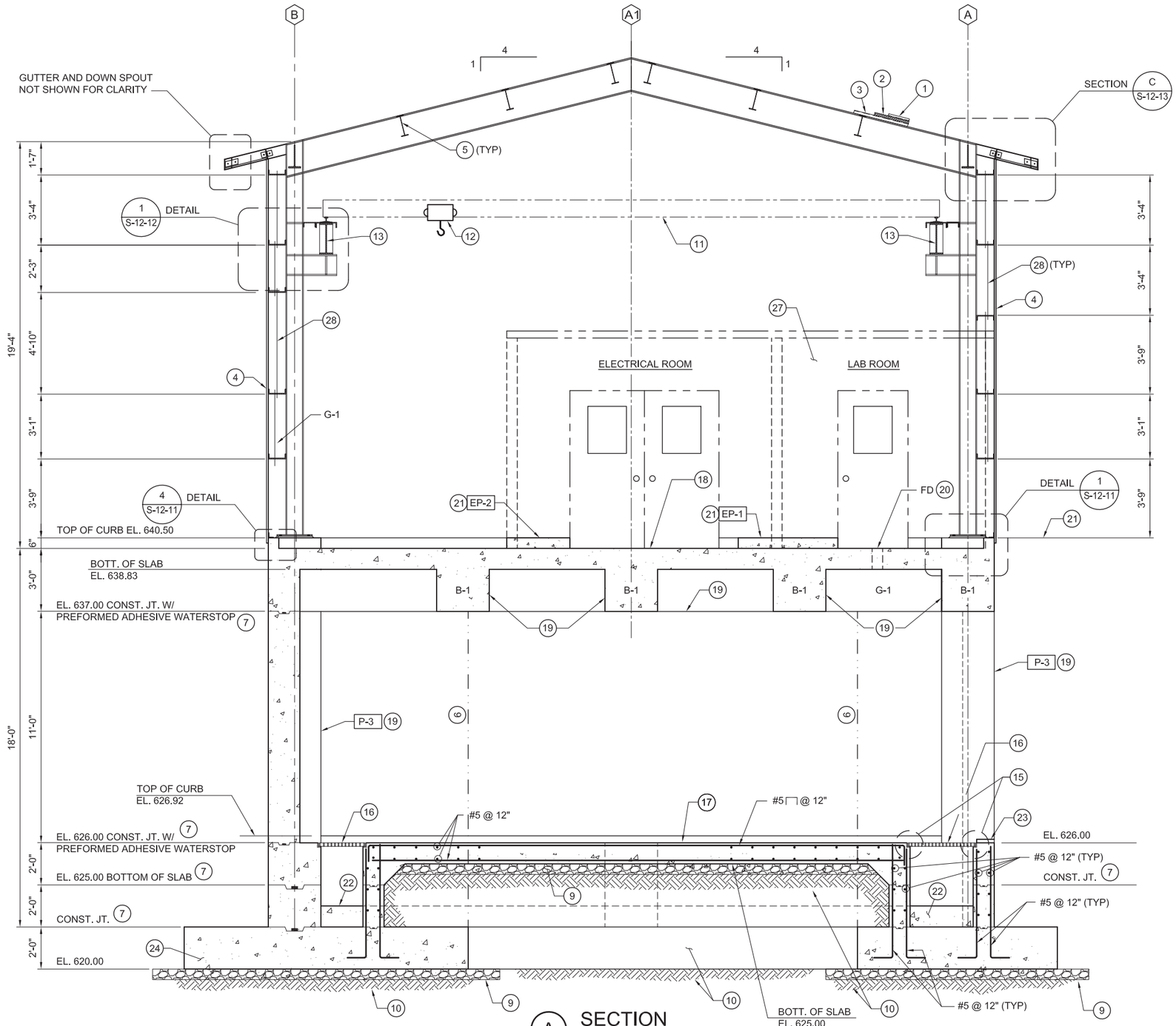

KEY NOTES:

1. METAL STANDING SEAM ROOF.
2. 2" RIGID INSULATION
3. 1 1/2" METAL ROOF DECK, SEE DWG. S-00-01.
4. INSULATED METAL SIDING
5. W12x19.
6. WALL VERTICAL CONST. JT., SEE DETAIL 3, DWG. S-00-02.
7. WALL HORIZONTAL CONST. JT., SEE DETAIL 1, DWG. S-00-02.
8. CONST. JT. WITHOUT WATERSTOP, SEE DETAIL 2, DWG. S-00-02.
9. 6" CRUSHED DRAIN ROCK. EXTEND MIN 2'-0" BEYOND FOOTING U.N.O.
10. STRUCTURAL FILL, 95% COMPACTION.
11. SINGLE CRANE BRIDGE, 2 TON CAPACITY, BY CRANE MANUFACTURER.
12. MOTOR OPERATED HOIST.
13. CRANE RUNWAY BEAM.
14. 13" Ø OPENING FOR DUCT, SEE DETAIL 6, DWG. S-00-04.
15. GRATING SUPPORT DETAIL 1 ON DWG. S-00-04.
16. TOP OF GRATING EL. 626.00.
17. TOP OF FLOOR, EL. VARIES. SEE DWG. S-12-02.
18. TOP OF FLOOR, EL. VARIES. SEE DWG. S-12-03.
19. FOR BEAM AND PILASTER SCHEDULE, SEE DWG. S-12-15.
20. FD INDICATES FLOOR DRAIN. SEE DWG. S-12-03.
21. TOP OF EQUIPMENT PAD. EL. 640.50.
22. CONCRETE FILL, SEE DWG. S-12-01.
23. T.O.C. EL. 626.17, ROUND SURFACE BETWEEN 12'-0" WIDE OPENING.
24. FOR FOUNDATION REINFORCING, SEE DWG. S-12-18.
26. NOT USED.
27. SEE ARCHITECTURAL DRAWING FOR LABORATORY AND ELECTRICAL ROOM REQUIREMENTS.
28. 1/2"Ø SAG ROD @ ℄ GIRT.

NOTES:

1. FOR INFORMATION NOT SHOWN OR INDICATED, SEE DWG S-12-07.

A SECTION

3/8" = 1'-0"

S-12-01, S-12-02, S-12-03, S-12-04

DRAFT
NOT FOR
CONSTRUCTION

E2 Consulting Engineers, Inc.
1900 Powell Street, Ste. 250
Emeryville, CA 94608
(510) 652-1164

CH2MHILL®

NO.	DATE	DESCRIPTION	GM/SPEC	DWN	CHKD	SUPV	APVD BY
1	09/08/14	PRE-FINAL (90%) DESIGN		MD	KJ	VMB	VMB
0	04/05/13	INTERMEDIATE (60%) DESIGN		MD	KJ	VMB	VMB

REVISIONS

APPROVED BY
SO
SUPV VMB
DSGN KDD
DWN MD
CHKD KJ
OK VMB
DATE 6/30/14
SCALES 3/8"=1'-0"

TOPOCK GROUNDWATER REMEDIATION PROJECT
REMEDY - PRODUCED WATER CONDITIONING PLANT BUILDING SECTION
GAS TRANSMISSION & DISTRIBUTION
PACIFIC GAS AND ELECTRIC COMPANY
SAN FRANCISCO, CALIFORNIA

MICROFILM
BILL OF MATL
DWG LIST
SUPSDS
SUPSD BY
SHEET NO. S-12-08 of SHEETS
REV 1

FILENAME: E2-S-XXX-1208.dwg
PLOT DATE: $PLOTDATE PLOT TIME: $PLOTTIME

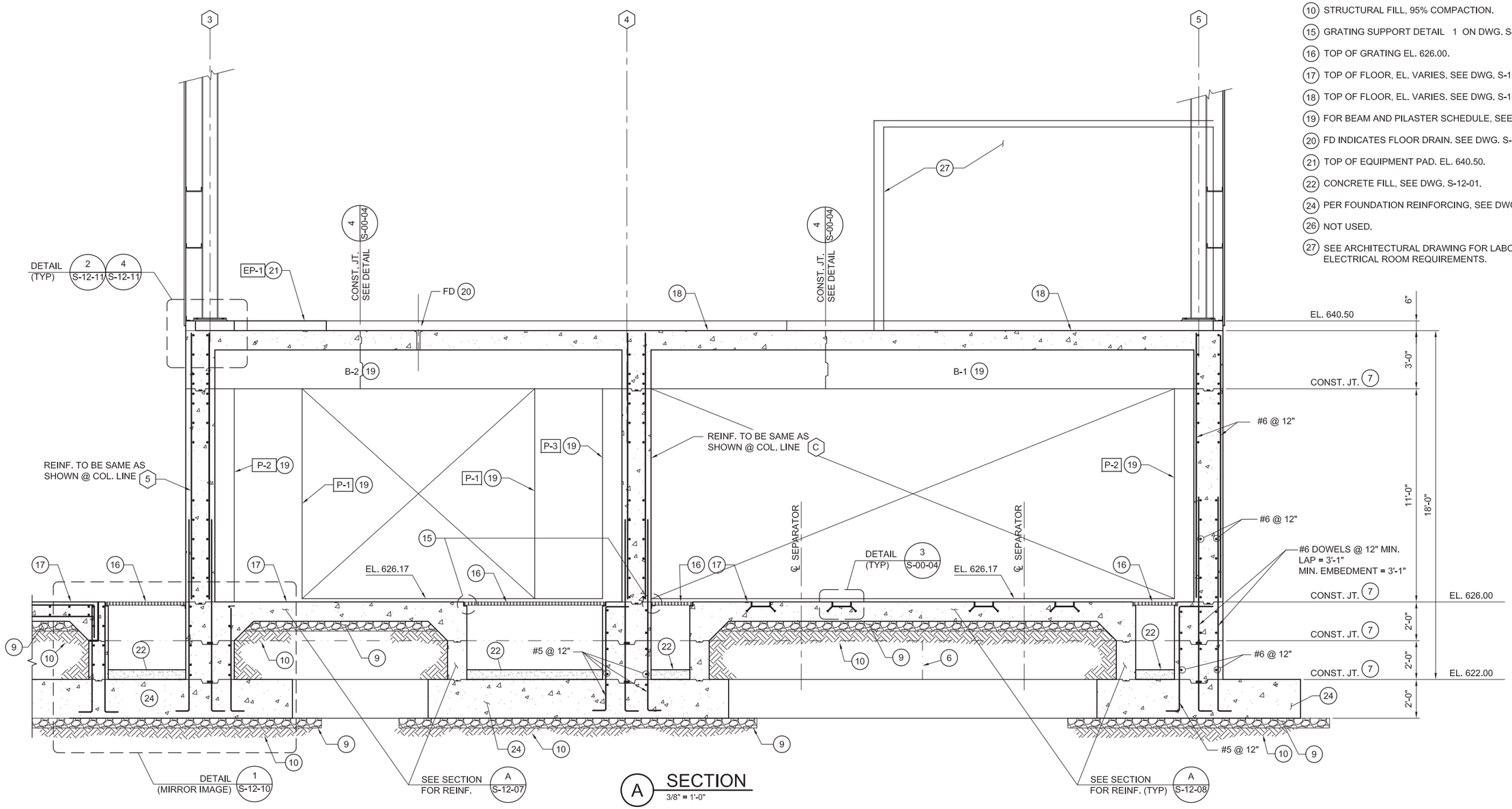

A SECTION

3/8" = 1'-0"

S-12-01, S-12-02, S-12-03, S-12-04

KEY NOTES:

6. WALL VERTICAL CONST. JT., SEE DETAIL 3, DWG. S-00-02.
7. WALL HORIZONTAL CONST. JT., SEE DETAIL 1, DWG. S-00-02.
8. CONST. JT. WITHOUT WATERSTOP, SEE DETAIL 2, DWG. S-00-02.
9. 6" CRUSHED DRAIN ROCK. EXTEND MIN 2'-0" BEYOND FOOTING U.N.O.
10. STRUCTURAL FILL, 95% COMPACTION.
15. GRATING SUPPORT DETAIL 1 ON DWG. S-00-04.
16. TOP OF GRATING EL. 626.00.
17. TOP OF FLOOR, EL. VARIES. SEE DWG. S-12-02.
18. TOP OF FLOOR, EL. VARIES. SEE DWG. S-12-03.
19. FOR BEAM AND PILASTER SCHEDULE, SEE DWG. S-12-15.
20. FD INDICATES FLOOR DRAIN. SEE DWG. S-12-03.
21. TOP OF EQUIPMENT PAD. EL. 640.50.
22. CONCRETE FILL, SEE DWG. S-12-01.
24. PER FOUNDATION REINFORCING, SEE DWG. S-12-18.
26. NOT USED.
27. SEE ARCHITECTURAL DRAWING FOR LABORATORY AND ELECTRICAL ROOM REQUIREMENTS.

DRAFT
NOT FOR
CONSTRUCTION

E2 Consulting Engineers, Inc.
1900 Powell Street, Ste. 250
Emeryville, CA 94608
(510) 652-1164

CH2MHILL®

NO.	DATE	DESCRIPTION	GM/SPEC	DWN	CHKD	SUPV	APVD BY
1	9/08/14	PRE-FINAL (90%) DESIGN		MD	KJ	VMB	VMB
0	04/05/13	INTERMEDIATE (60%) DESIGN		MD	KJ	VMB	VMB

REVISIONS

APPROVED BY: SO
SUPV VMB
DSGN KDD
DWN MD
CHKD KJ
OK VMB
DATE 6/30/14
SCALES 3/8"=1"-0"

TOPOCK GROUNDWATER REMEDIATION PROJECT
REMEDY - PRODUCED WATER CONDITIONING PLANT BUILDING SECTION
GAS TRANSMISSION & DISTRIBUTION
PACIFIC GAS AND ELECTRIC COMPANY
SAN FRANCISCO, CALIFORNIA

MICROFILM
BILL OF MATL
DWG LIST
SUPSDS
SUPSD BY
SHEET NO. of SHEETS
S-12-09
REV 1

PLOT DATE: $PLOTDATE PLOT TIME: $PLOTTIME
FILENAME: E2-S-XXX-1209.dwg

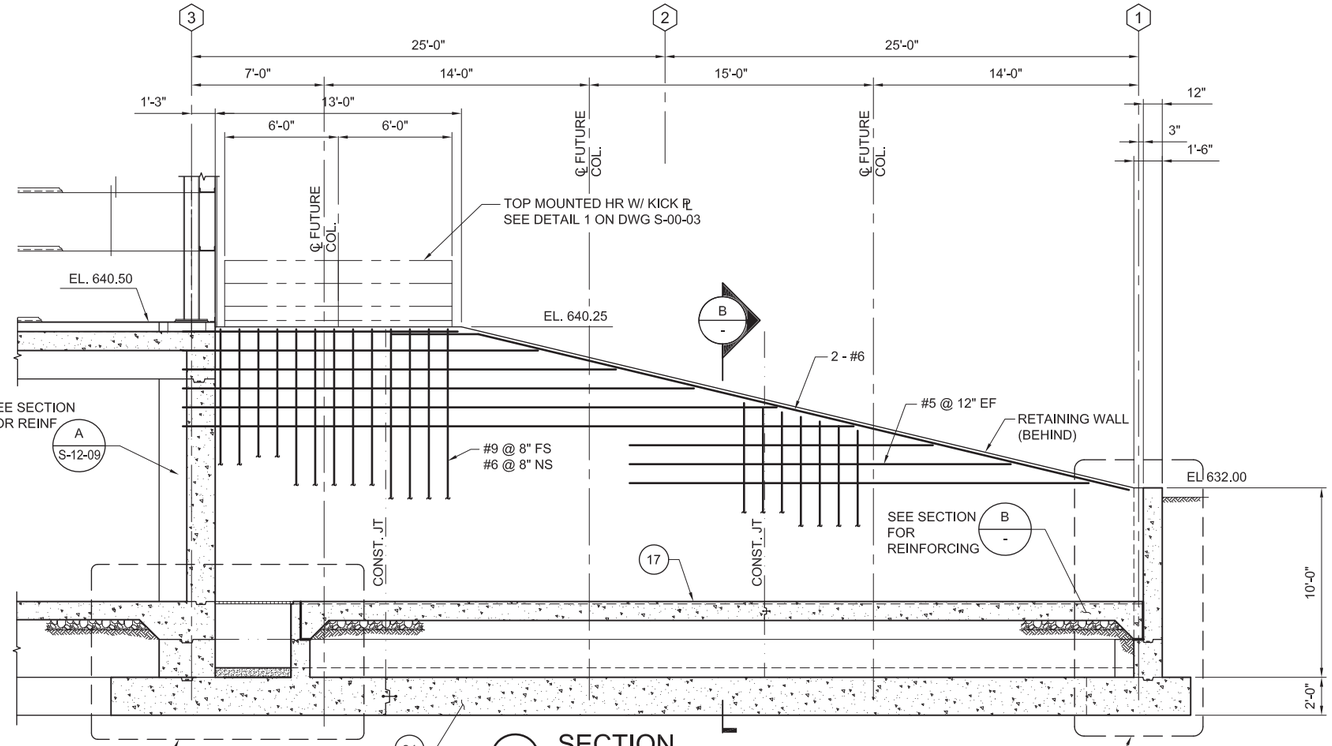

A SECTION
1/4" = 1'-0"
S-12-01, S-12-02, S-12-03

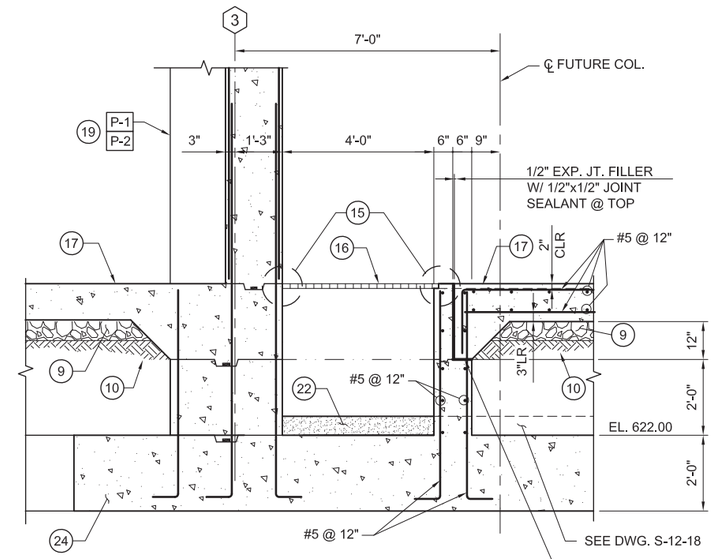

1 DETAIL
1/2" = 1'-0"
S-12-09

NOTES:

1. FOR KEY NOTES, SEE DWG S-12-07.

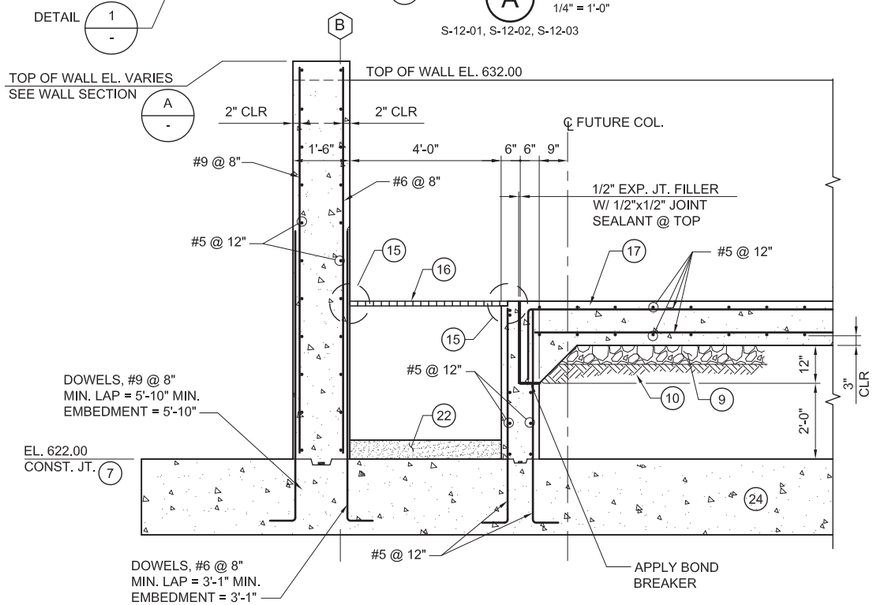

B SECTION
1/2" = 1'-0"
S-12-01, S-12-02, S-12-03

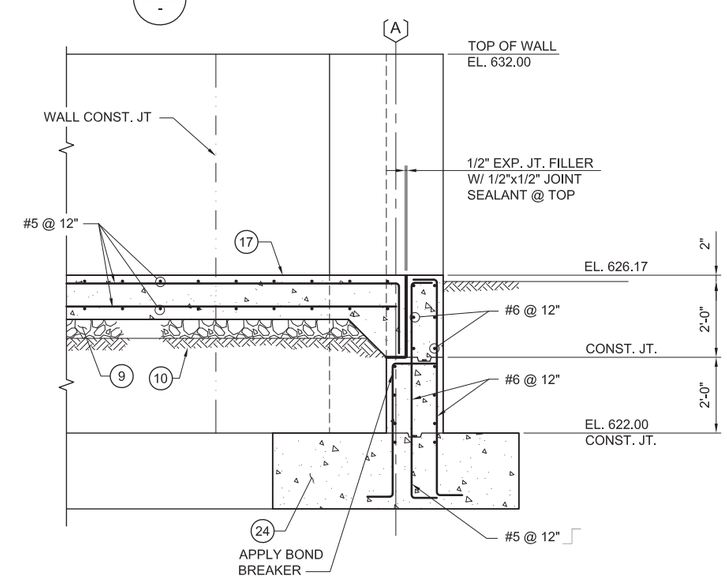

C SECTION
1/2" = 1'-0"
S-12-01, S-12-02

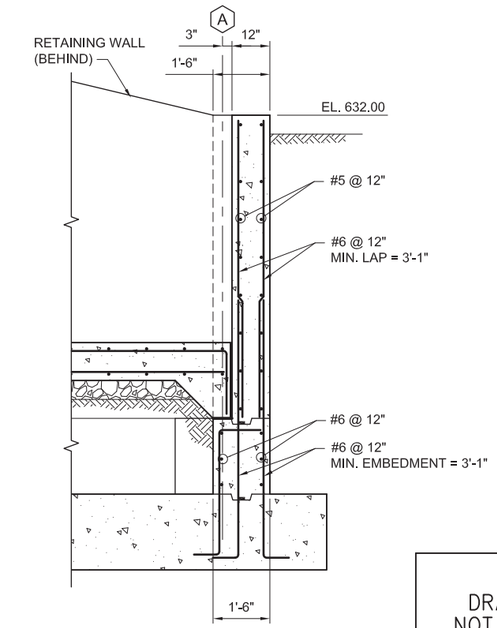

2 DETAIL
1/2" = 1'-0"

DRAFT
NOT FOR
CONSTRUCTION

E2 Consulting Engineers, Inc.
1900 Powell Street, Ste. 250
Emeryville, CA 94608
(510) 652-1164

CH2MHILL®

NO.	DATE	DESCRIPTION	GM/SPEC	DWN	CHKD	SUPV	APVD BY
0	09/08/14	PRE-FINAL (90%) DESIGN		MD	KJ	VMB	VMB

REVISIONS

APPROVED BY
SO
SUPV VMB
DSGN KDD
DWN MD
CHKD KJ
OK VMB
DATE 6/30/14
SCALES AS NOTED

TOPOCK GROUNDWATER REMEDIATION PROJECT
REMEDY - PRODUCED WATER CONDITIONING PLANT SECTIONS AND DETAILS
GAS TRANSMISSION & DISTRIBUTION
PACIFIC GAS AND ELECTRIC COMPANY
SAN FRANCISCO, CALIFORNIA

MICROFILM
BILL OF MATL
DWG LIST
SUPSDS
SUPSD BY
SHEET NO. of SHEETS
S-12-10
REV 0

FILENAME: E2-S-XXX-1203.dwg
PLOT DATE: $PLOTDATE PLOT TIME: $PLOTTIME

N180B

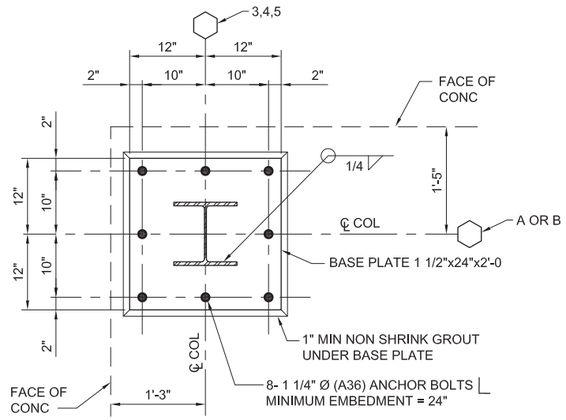

1 DETAIL
1" = 1'-0"
S-12-03, S-12-05, S-12-06
S-12-07, S-12-08

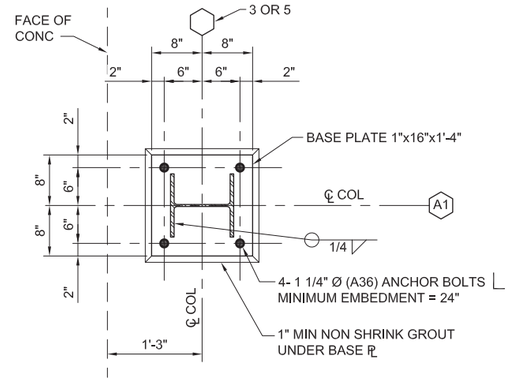

2 DETAIL
1" = 1'-0"
S-12-03, S-12-06
S-12-07, S-12-09

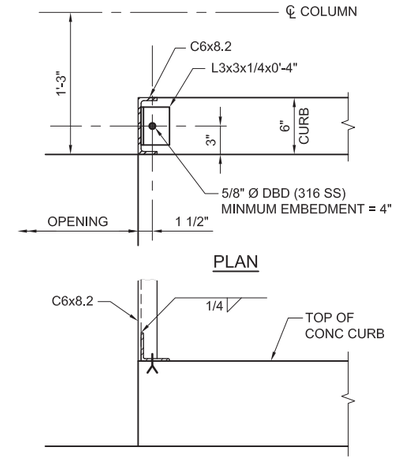

3 DETAIL
1 1/2" = 1'-0"
S-12-03, S-12-06

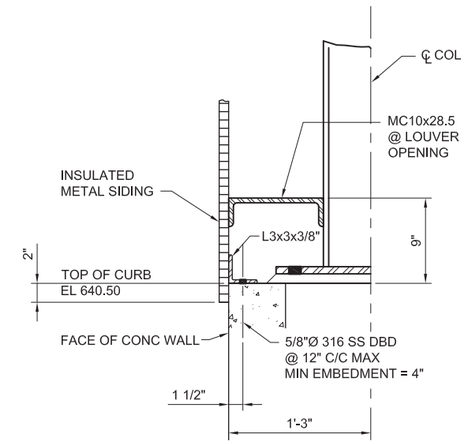

4 DETAIL (TYP ALL SIDES)
1 1/2" = 1'-0"
S-12-03, S-12-05, S-12-06
S-12-07, S-12-08, S-12-09

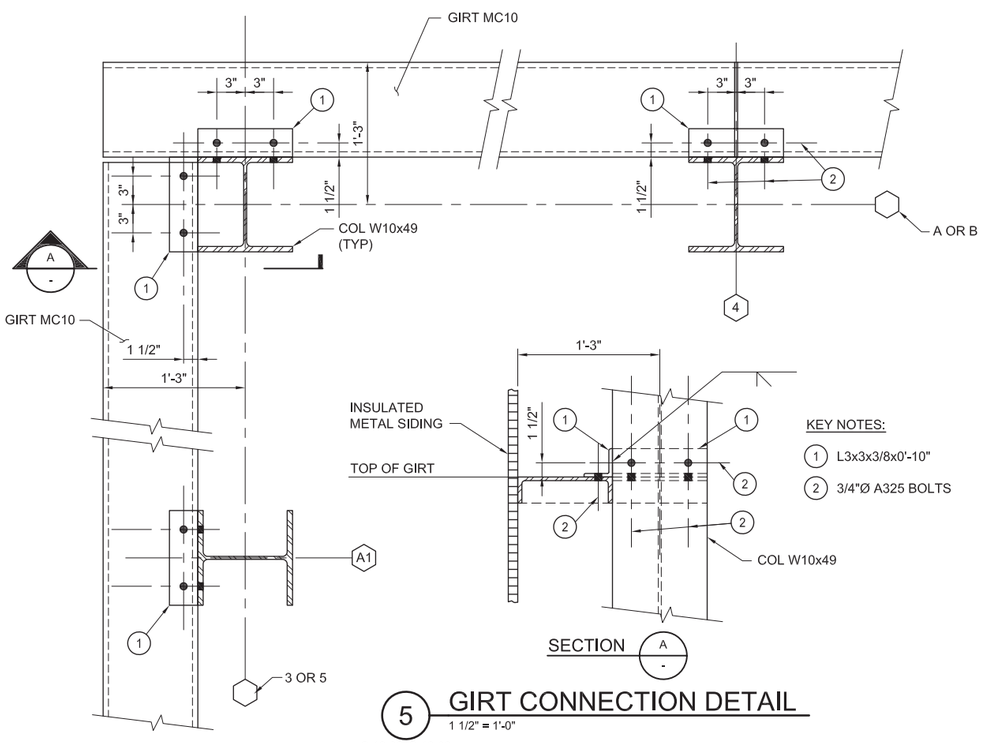

5 GIRT CONNECTION DETAIL
1 1/2" = 1'-0"
S-12-06, S-12-06

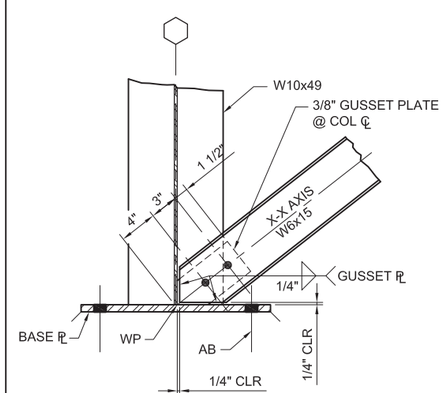

6 DETAIL
1 1/2" = 1'-0"
S-12-05
S-12-06

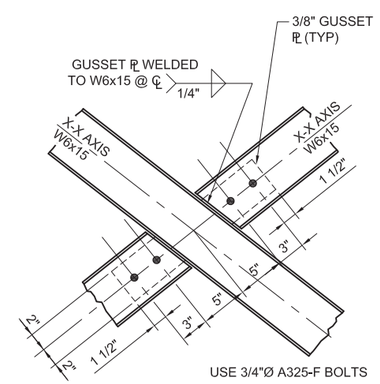

7 DETAIL
1 1/2" = 1'-0"
S-12.05
S-12-06

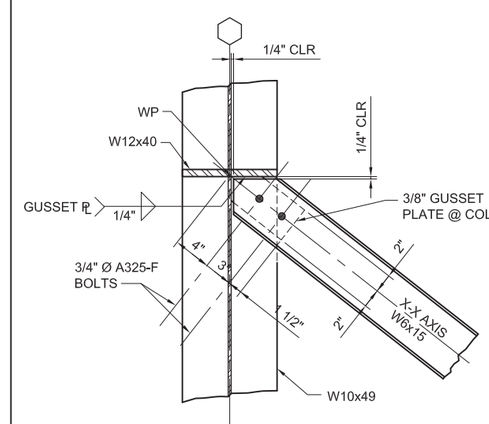

8 DETAIL
1 1/2" = 1'-0"
S-12-05
S-12-06

DRAFT
NOT FOR
CONSTRUCTION

E2 Consulting Engineers, Inc.
1900 Powell Street, Ste. 250
Emeryville, CA 94608
(510) 652-1164

CH2MHILL®

NO.	DATE	DESCRIPTION	GM/SPEC	DWN	CHKD	SUPV	APVD BY
0	09/08/14	PRE-FINAL (90%) DESIGN		MD	KJ	VMB	VMB

REVISIONS

APPROVED BY
SO
SUPV VMB
DSGN KDD
DWN MD
CHKD KJ
OK VMB
DATE 6/30/14
SCALES AS NOTED

TOPOCK GROUNDWATER REMEDIATION PROJECT
REMEDY - PRODUCED WATER CONDITIONING PLANT SECTIONS AND DETAILS
GAS TRANSMISSION & DISTRIBUTION
PACIFIC GAS AND ELECTRIC COMPANY
SAN FRANCISCO, CALIFORNIA

MICROFILM
BILL OF MATL
DWG LIST
SUPSDS
SUPSD BY
SHEET NO. of SHEETS
S-12-11
REV 0

FILENAME: E2-S-XXX-1203.dwg
PLOT TIME: $PLOTTIME
PLOT DATE: $PLOTDATE

N180B

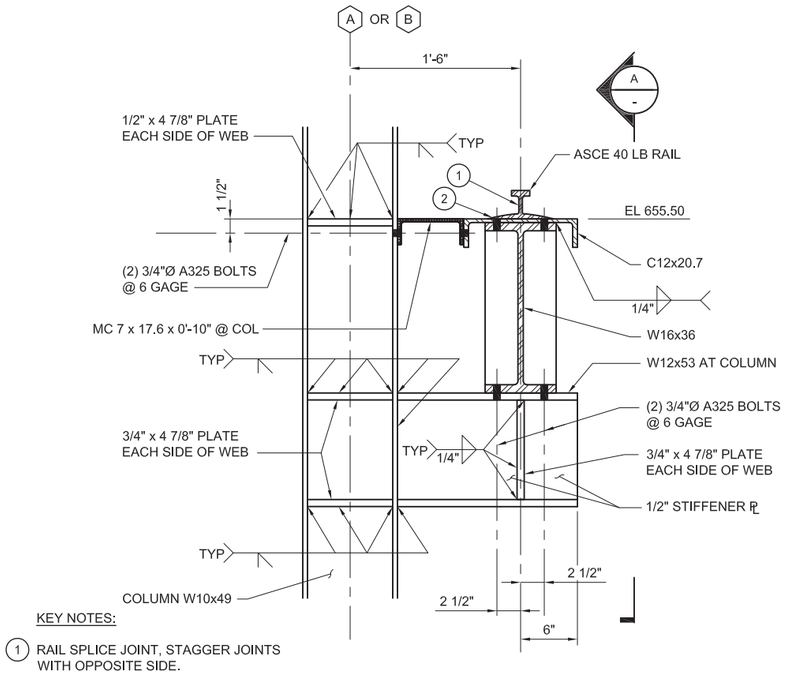

KEY NOTES:

1. RAIL SPLICE JOINT, STAGGER JOINTS WITH OPPOSITE SIDE.
2. ATTACH RAL TO CRANE GIRDER PER MANUFACTURER'S RECOMMENDATIONS.
3. CRANE STOP AT EACH END PER CRANE MANUFACTURER'S RECOMMENDATIONS,

1 DETAIL

1 1/2" = 1'-0"

S-12-05, S-12-07, S-12-08

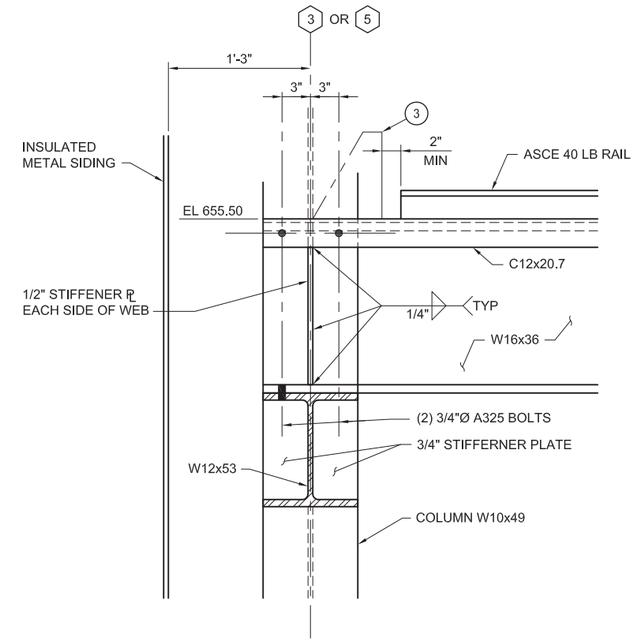

AT COL LINE 3 AND 5

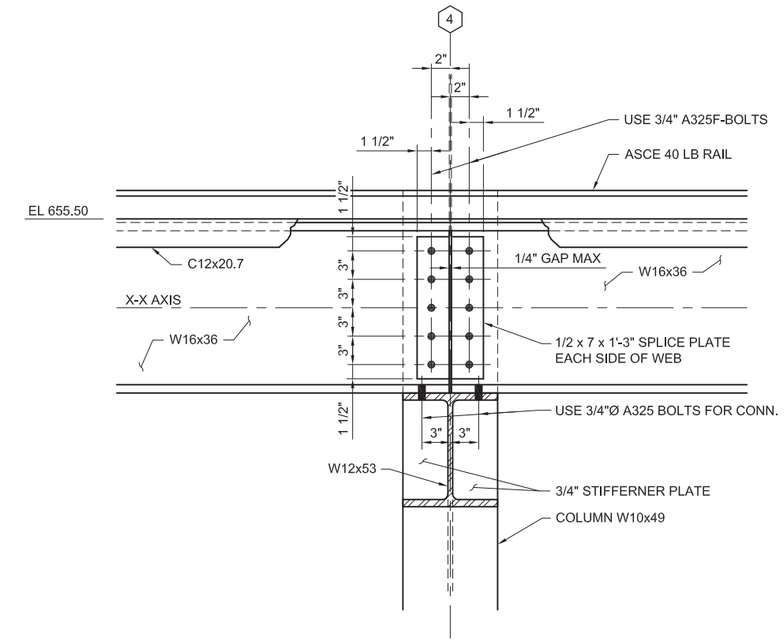

AT COL LINE 4

A SECTION

1 1/2" = 1'-0"

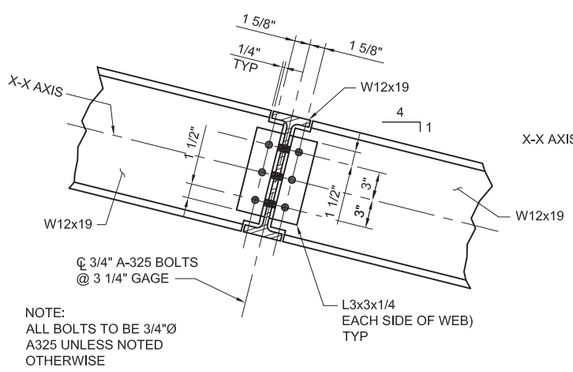

NOTE:
ALL BOLTS TO BE 3/4"Ø
A325 UNLESS NOTED
OTHERWISE

B SECTION

1 1/2" = 1'-0"

S-12-04

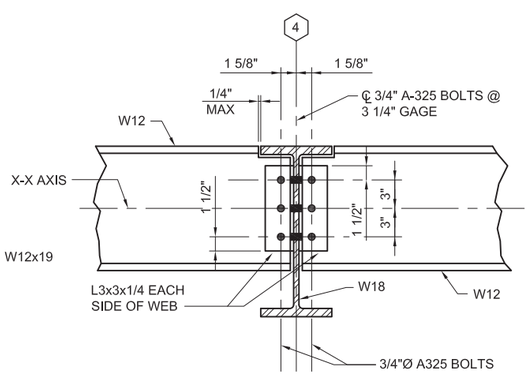

C SECTION

1 1/2" = 1'-0"

S-12-04

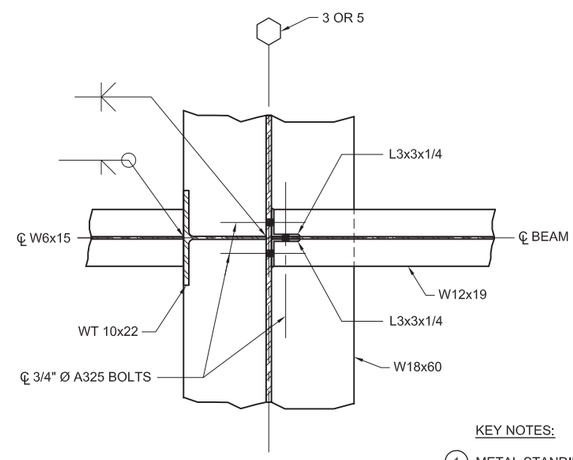

E SECTION

1 1/2" = 1'-0"

S-12-12

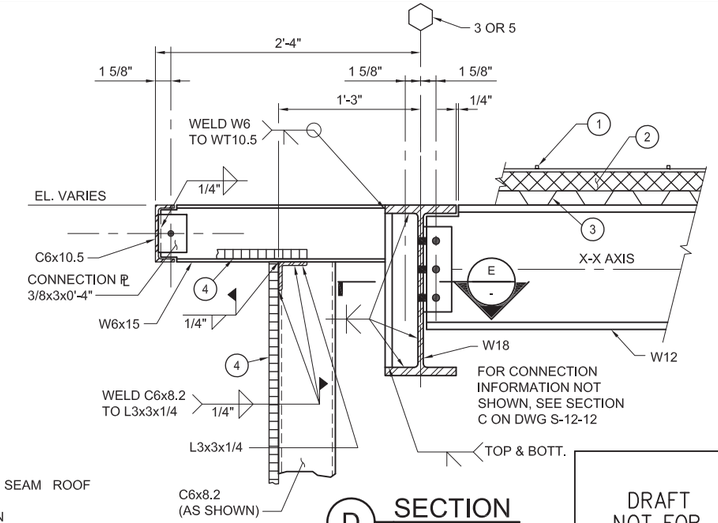

D SECTION

1 1/2" = 1'-0"

S-12-04, S-12-12, S-12-14

KEY NOTES:

1. METAL STANDING SEAM ROOF
2. RIGID INSULATION
3. 1 1/2" METAL DEAC
4. INSULATED METAL SIDING

DRAFT
NOT FOR
CONSTRUCTION

E2 Consulting Engineers, Inc.
1900 Powell Street, Ste. 250
Emeryville, CA 94608
(510) 652-1164

CH2MHILL®

NO.	DATE	DESCRIPTION	GM/SPEC	DWN	CHKD	SUPV	APVD BY
0	09/08/14	PRE-FINAL (90%) DESIGN		MD	KJ	VMB	VMB

REVISIONS

APPROVED BY		
	SO	
	SUPV	VMB
	DSGN	KDD
	DWN	MD
	CHKD	KJ
	OK	VMB
	DATE	6/30/14
	SCALES	AS NOTED

TOPOCK GROUNDWATER REMEDIATION PROJECT

REMEDY - PRODUCED WATER CONDITIONING PLANT SECTIONS AND DETAILS

GAS TRANSMISSION & DISTRIBUTION

PACIFIC GAS AND ELECTRIC COMPANY
SAN FRANCISCO, CALIFORNIA

MICROFILM	
BILL OF MATL	
DWG LIST	
SUPSDS	
SUPSD BY	
SHEET NO. of SHEETS	
S-12-12	REV 0

PLOT DATE: $PLOTDATE PLOT TIME: $PLOTTIME

FILENAME: E2-S-XXX-1203.dwg

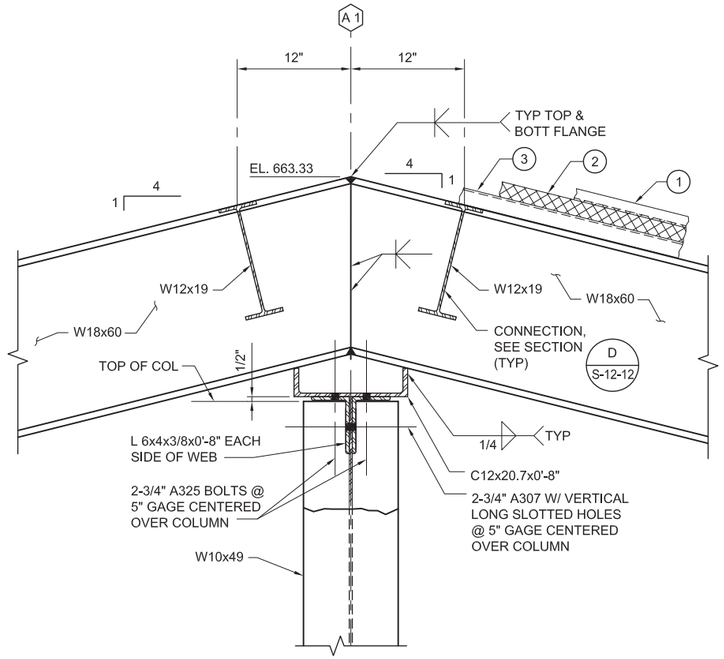

A SECTION
1 1/2" = 1'-0"
S-12-04, S-12-05, S-12-07

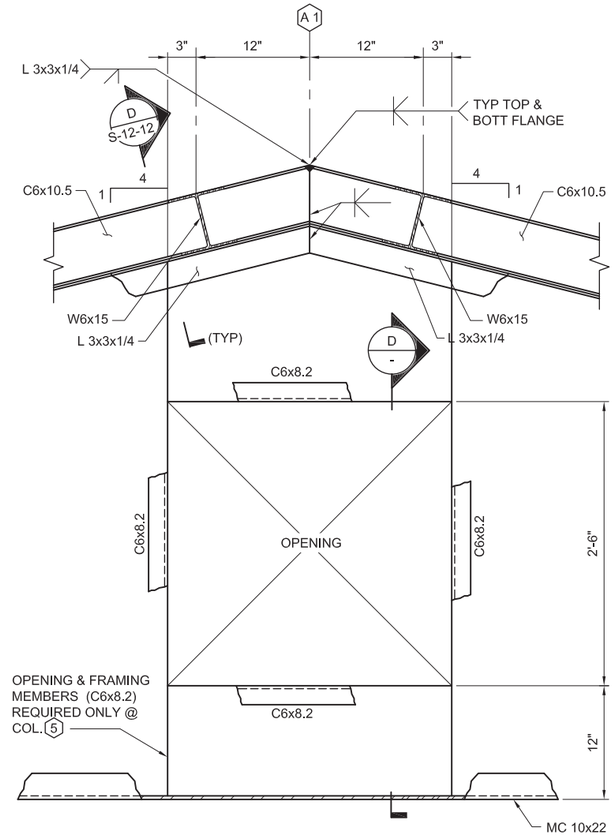

B SECTION AT LINE 3 & 5 ONLY
1 1/2" = 1'-0"
S-12-04, S-12-05, S-12-06, S-12-07

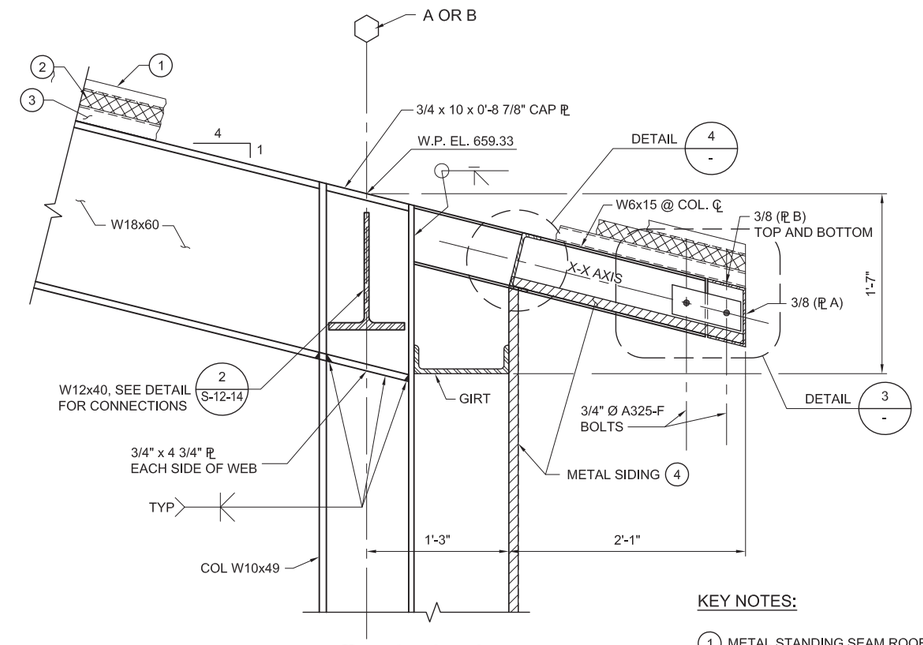

C SECTION
1 1/2" = 1'-0"
S-12-05, S-12-07, S-12-08, S-12-14

KEY NOTES:

1. METAL STANDING SEAM ROOF.
2. 2" RIGID INSULATION
3. 1 1/2" METAL ROOF DECK
4. INSULATED METAL SIDING

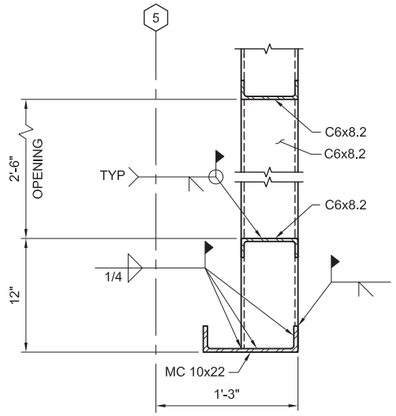

D SECTION
1 1/2" = 1'-0"
-

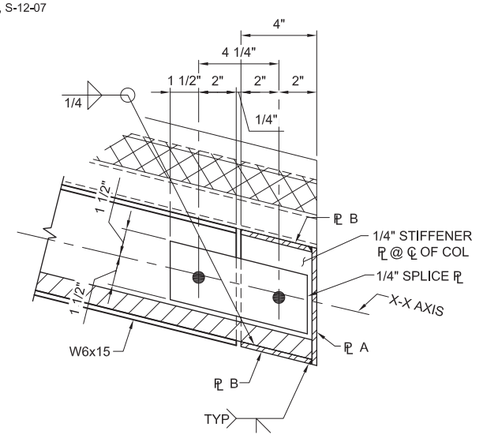

3 DETAIL
3" = 1'-0"
-

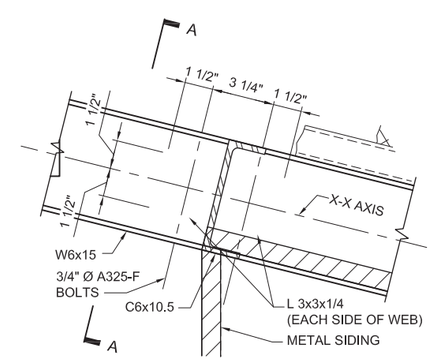

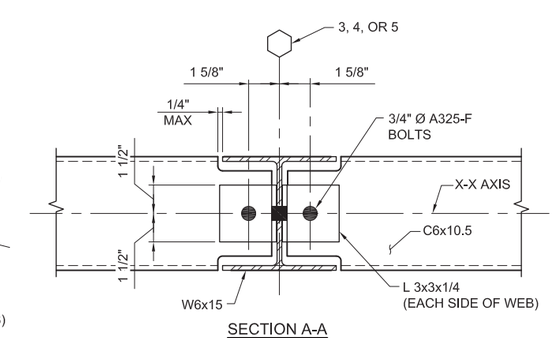

SECTION A-A

4 DETAIL
3" = 1'-0"
-

DRAFT
NOT FOR
CONSTRUCTION

E2 Consulting Engineers, Inc.
1900 Powell Street, Ste. 250
Emeryville, CA 94608
(510) 652-1164

CH2MHILL®

NO.	DATE	DESCRIPTION	GM/SPEC	DWN	CHKD	SUPV	APVD BY
0	09/08/14	PRE-FINAL (90%) DESIGN		MD	KJ	VMB	VMB

REVISIONS

APPROVED BY
SO
SUPV VMB
DSGN KDD
DWN MD
CHKD KJ
OK VMB
DATE 6/30/14
SCALES AS NOTED

TOPOCK GROUNDWATER REMEDIATION PROJECT
REMEDY - PRODUCED WATER CONDITIONING PLANT
SECTIONS AND DETAILS
GAS TRANSMISSION & DISTRIBUTION
PACIFIC GAS AND ELECTRIC COMPANY
SAN FRANCISCO, CALIFORNIA

MICROFILM
BILL OF MATL
DWG LIST
SUPSDS
SUPSD BY
SHEET NO. of SHEETS
S-12-13
REV 0

FILENAME: E2-S-XXX-1203.dwg
PLOT DATE: $PLOTDATE PLOT TIME: $PLOTTIME

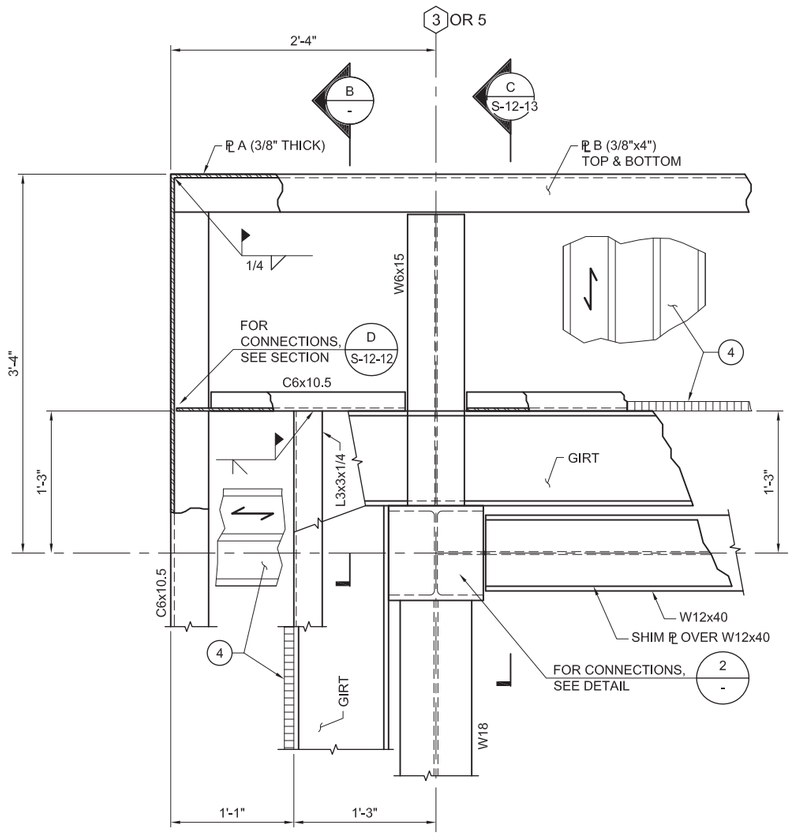

1 DETAIL
1 1/2" = 1'-0"
S-12-04

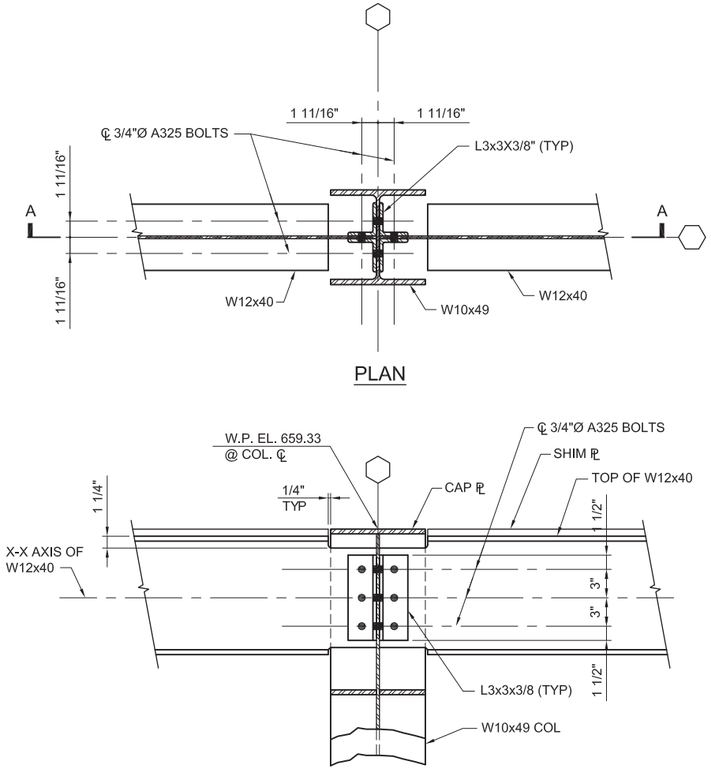

2 DETAIL
1 1/2" = 1'-0"
S-12-04, S-12-13

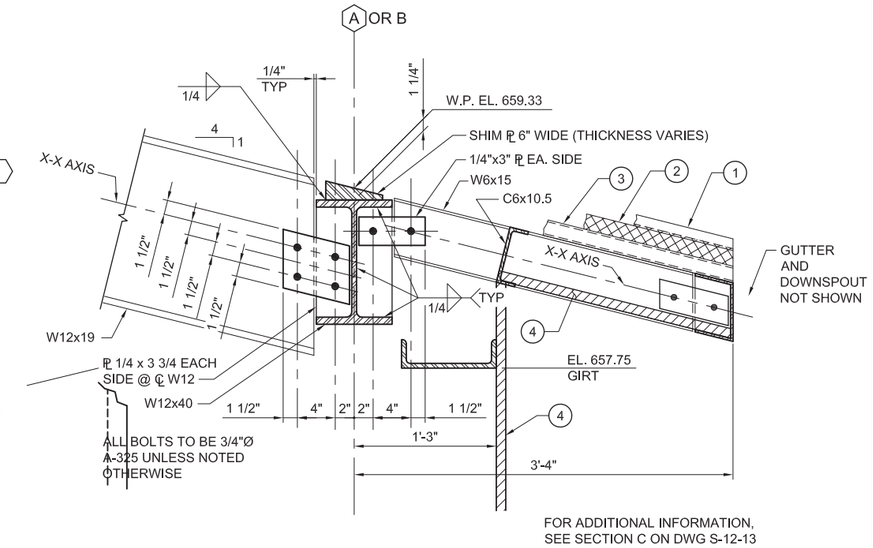

A SECTION
1 1/2" = 1'-0"
S-12-04

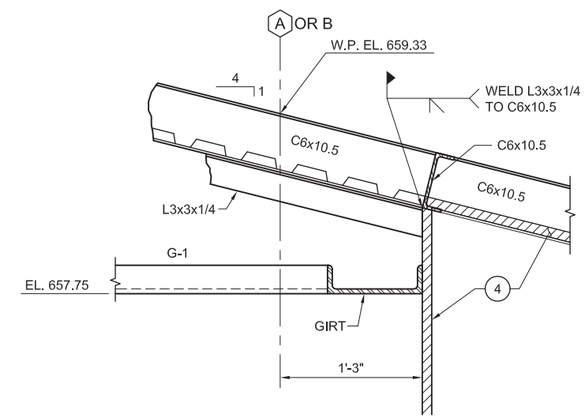

B SECTION
1 1/2" = 1'-0"
-

DRAFT
NOT FOR
CONSTRUCTION

E2 Consulting Engineers, Inc.
1900 Powell Street, Ste. 250
Emeryville, CA 94608
(510) 652-1164

CH2MHILL®

NO.	DATE	DESCRIPTION	GM/SPEC	DWN	CHKD	SUPV	APVD BY
0	09/08/14	PRE-FINAL (90%) DESIGN		MD	KJ	VMB	VMB

REVISIONS

APPROVED BY
SO
SUPV VMB
DSGN KDD
DWN MD
CHKD KJ
OK VMB
DATE 6/30/14
SCALES 1 1/2"=1'-0"

TOPOCK GROUNDWATER REMEDIATION PROJECT
REMEDY - PRODUCED
WATER CONDITIONING PLANT
SECTIONS AND DETAILS
GAS TRANSMISSION & DISTRIBUTION
PACIFIC GAS AND ELECTRIC COMPANY
SAN FRANCISCO, CALIFORNIA

MICROFILM
BILL OF MATL
DWG LIST
SUPSDS
SUPSD BY
SHEET NO. of SHEETS
S-12-14
REV 0

PLOT DATE: $PLOTDATE PLOT TIME: $PLOTTIME
FILENAME: E2-S-XXX-1203.dwg

N180B

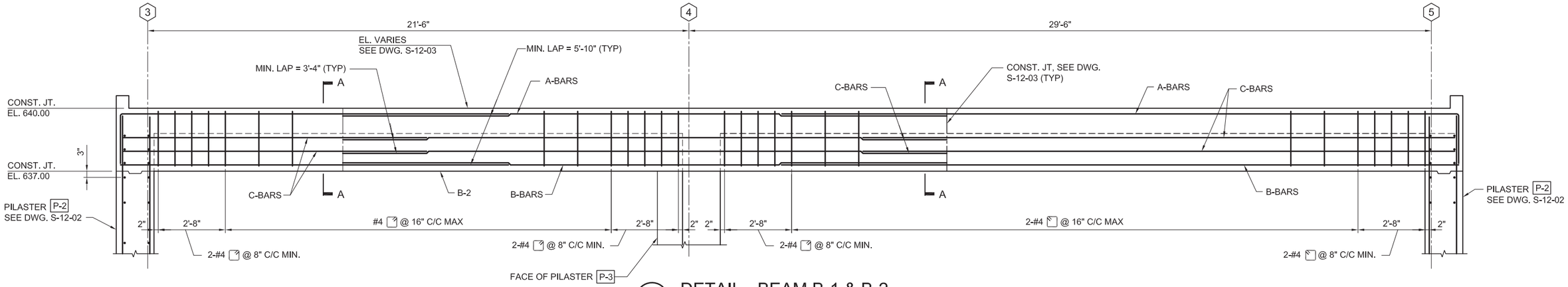

1 DETAIL - BEAM B-1 & B-2

1/2"=1'-0"

S-12-03

BEAM SCHEDULE									
BEAM MARK	SIZE		REINFORCING BARS				STIRRUPS		REMARKS
	WIDTH	DEPTH	A-BARS	B-BARS	C-BARS	D-BARS	SIZE	SPACING	
B-1	30	36	5-#8	5-#7	2-#5		#4	SEE DETAIL 1	SL
B-2	30	36	5-#7	5-#8	2-#5		#4	SEE DETAIL 1	SL

PILASTER SCHEDULE					
MARK SIZE	REINFORCING BARS				REMARKS
	VERT. BARS	DOWEL BARS	MIN. LAP	TIES	
P-1 18"x24"	6-#6	6-#6	3'-1"	#4@12"	SEE DETAIL 1/S-12-16
P-2 30"x30"	12-#8	12-#8	5'-2"	#4@12"	SEE DETAIL 2/S-12-16
P-3 30"x30"	12-#8	12-#8	5'-2"	#4@12"	SEE DETAIL 3/S-12-16

NOTES:

1. BEAM DEPTH LISTED IN TABLE ARE NOMINAL.
2. SL - SINGLE LAYER (BOTTOM/TOP REINFORCING)

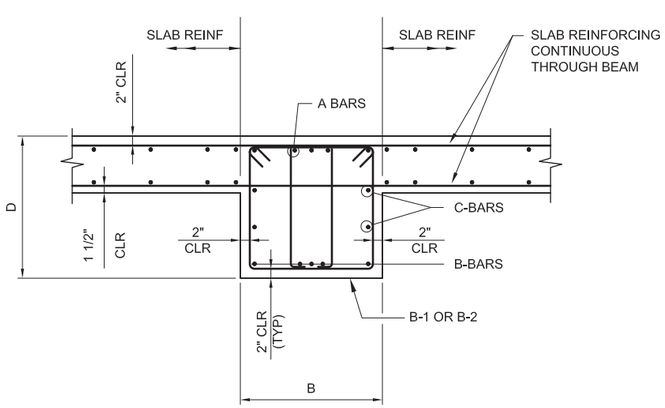

SECTION A-A

DRAFT
NOT FOR
CONSTRUCTION

E2 Consulting Engineers, Inc.
1900 Powell Street, Ste. 250
Emeryville, CA 94608
(510) 652-1164

CH2MHILL®

NO.	DATE	DESCRIPTION	GM/SPEC	DWN	CHKD	SUPV	APVD BY
0	09/08/14	PRE-FINAL (90%) DESIGN		MD	KJ	VMB	VMB

REVISIONS

APPROVED BY
SO
SUPV VMB
DSGN KDD
DWN MD
CHKD KJ
OK VMB
DATE 6/30/14
SCALES AS NOTED

TOPOCK GROUNDWATER REMEDIATION PROJECT
REMEDY - PRODUCED
WATER CONDITIONING PLANT
BEAM AND PILASTER SCHEDULES
GAS TRANSMISSION & DISTRIBUTION
PACIFIC GAS AND ELECTRIC COMPANY
SAN FRANCISCO, CALIFORNIA

MICROFILM
BILL OF MATL
DWG LIST
SUPSDS
SUPSD BY
SHEET NO. of SHEETS
S-12-15
REV 0

FILENAME: E2-S-XXX-1203.dwg
PLOT DATE: $PLOTDATE PLOT TIME: $PLOTTIME

N180B

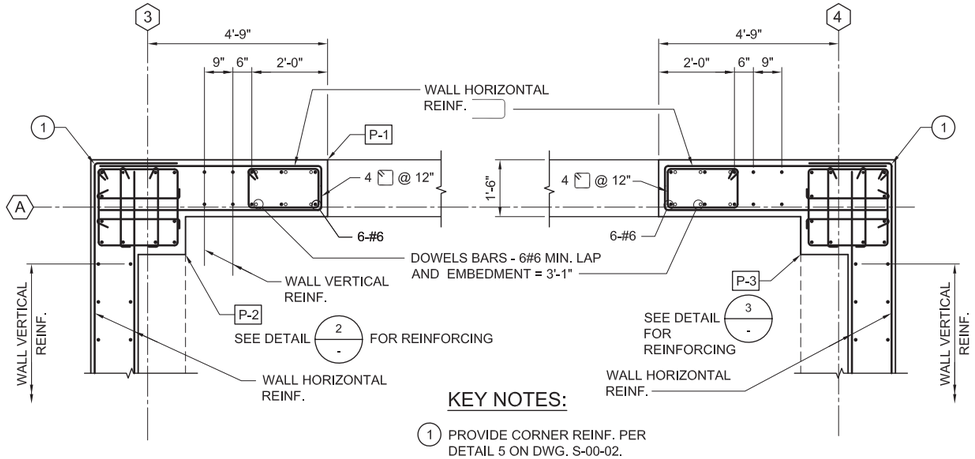

KEY NOTES:

1 PROVIDE CORNER REINF. PER DETAIL 5 ON DWG. S-00-02.

1 DETAIL -PILASTER P-1
1/2"=1'-0"
S-12-15

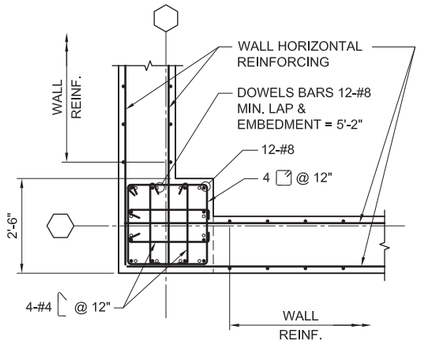

2 DETAIL -PILASTER P-2
1/2"=1'-0"
S-12-15

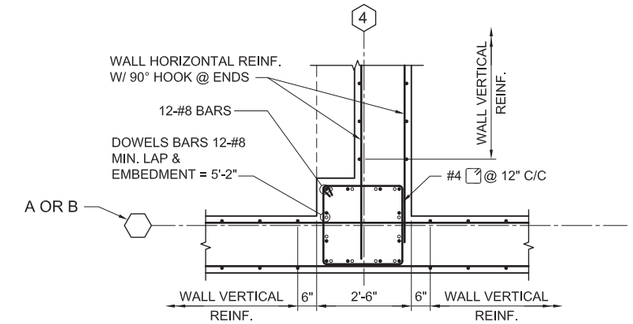

3 DETAIL -PILASTER P-3
1/2"=1'-0"
S-12-15

DRAFT
NOT FOR
CONSTRUCTION

E2 Consulting Engineers, Inc.
1900 Powell Street, Ste. 250
Emeryville, CA 94608
(510) 652-1164

CH2MHILL®

NO.	DATE	DESCRIPTION	GM/SPEC	DWN	CHKD	SUPV	APVD BY
0	09/08/14	PRE-FINAL (90%) DESIGN		MD	KJ	VMB	VMB

REVISIONS

APPROVED BY
SO
SUPV VMB
DSGN KDD
DWN MD
CHKD KJ
OK VMB
DATE 6/30/14
SCALES AS NOTED

TOPOCK GROUNDWATER REMEDIATION PROJECT
REMEDY - PRODUCED WATER CONDITIONING PLANT BEAM AND PILASTER SCHEDULE
GAS TRANSMISSION & DISTRIBUTION
PACIFIC GAS AND ELECTRIC COMPANY
SAN FRANCISCO, CALIFORNIA

MICROFILM
BILL OF MATL
DWG LIST
SUPSDS
SUPSD BY
SHEET NO. of SHEETS
S-12-16
REV 0

FILENAME: E2-S-XXX-1203.dwg
PLOT DATE: $PLOTDATE PLOT TIME: $PLOTTIME

N180B

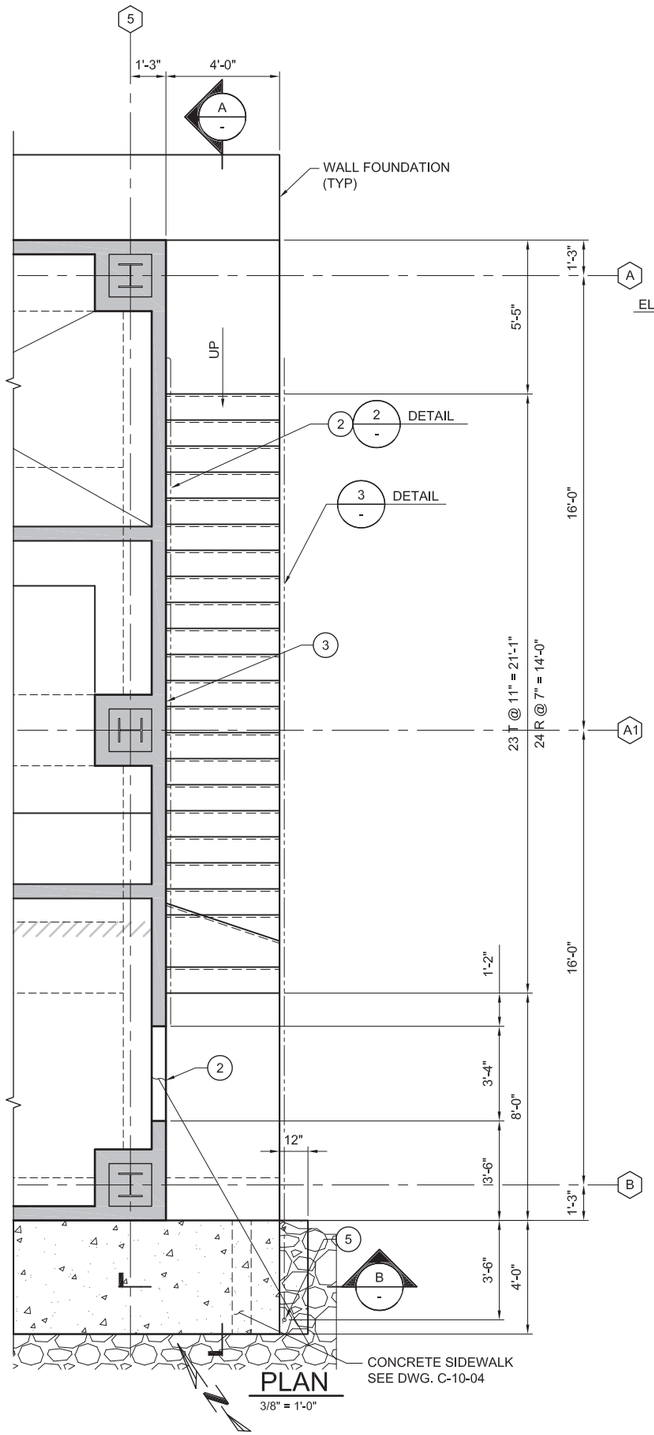

PLAN
3/8" = 1'-0"

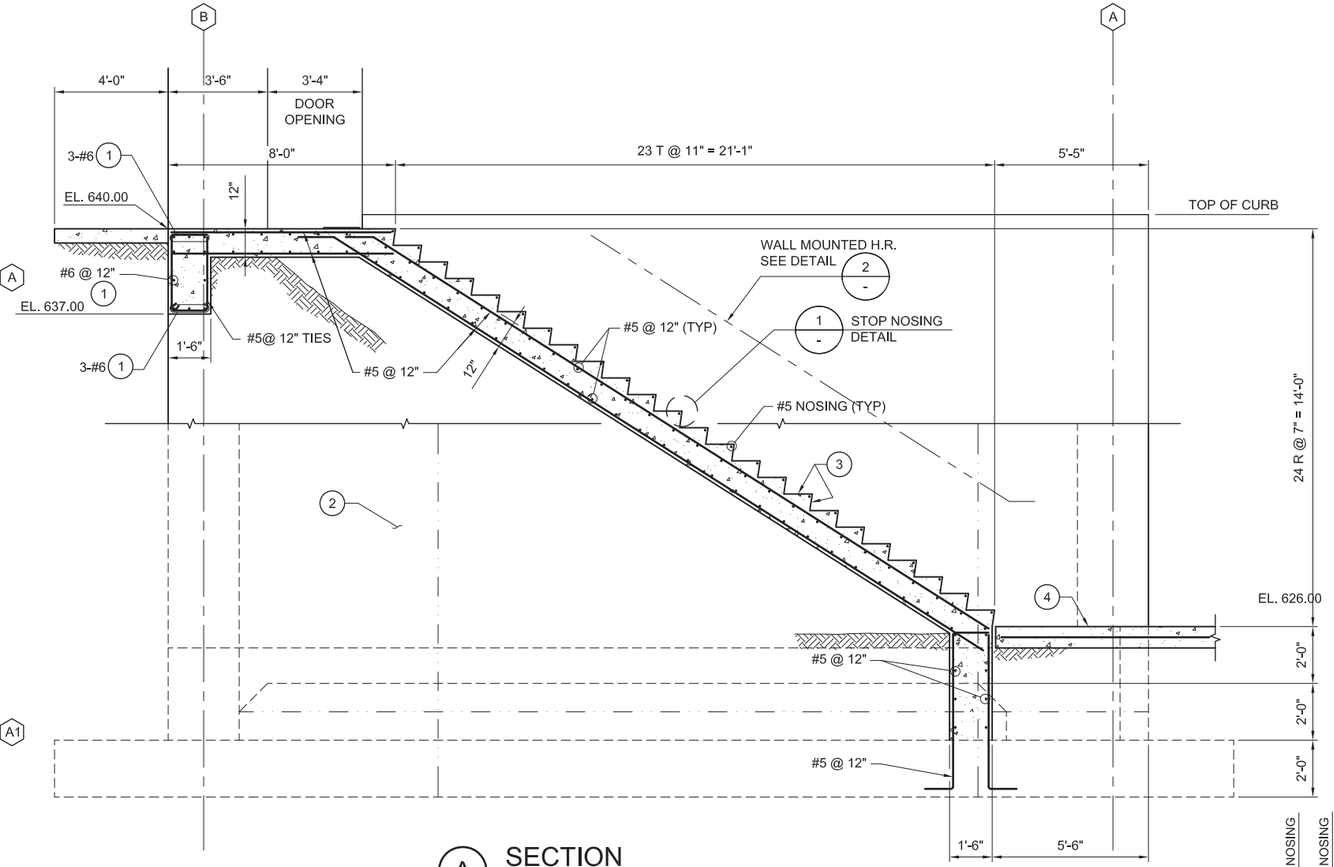

A SECTION
3/8" = 1'-0"
S-12-01, S-12-02, S-12-03

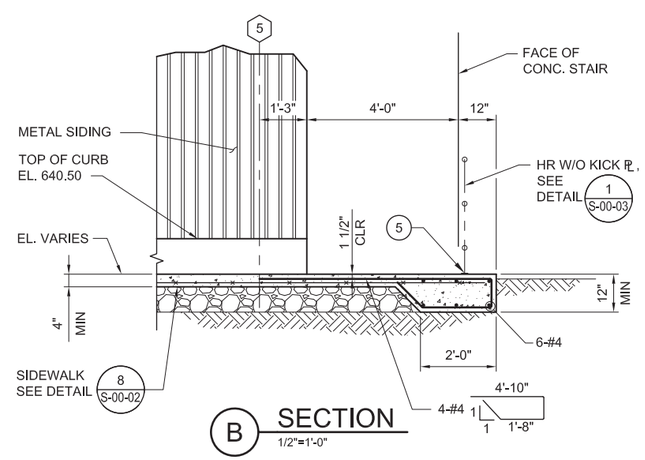

B SECTION
1/2"=1'-0"

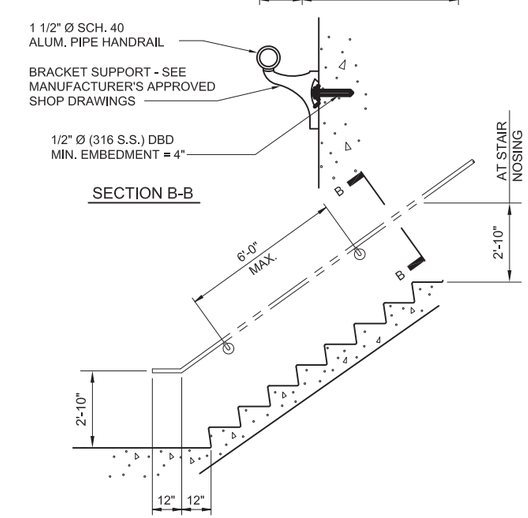

2 WALL MOUNTED HANDRAIL DETAIL
N.T.S.

KEY NOTES:

1. EXTEND #5 AND #6 BARS 3'-1" INTO WALL.
2. REMEDY BUILDING WALL (BEHIND)
3. PROVIDE 1/2" x 1/2" JOINT SEALANT.
4. CONC. SIDEWALK, SEE GRADING PLANS.
5. THE MOUNTED HR POST, SEE DETAIL 4 ON DWG. S-00-03.

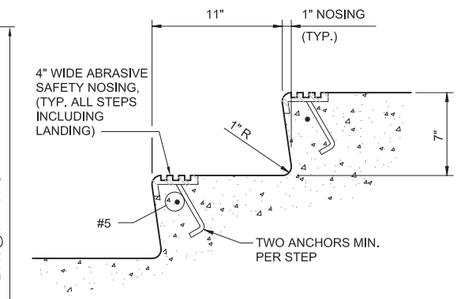

1 STEP NOSING DETAIL
N.T.S.

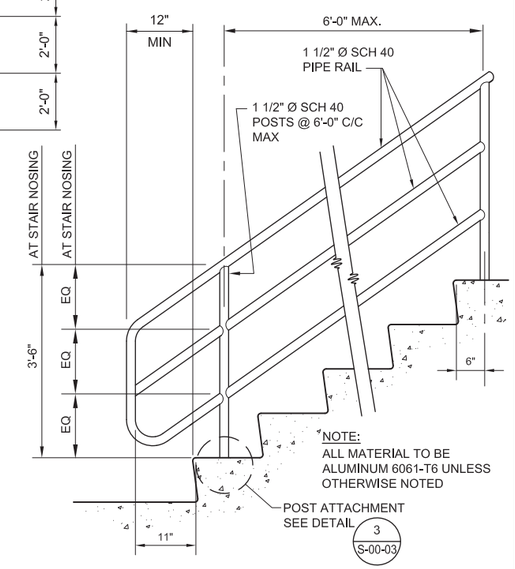

NOTE:
ALL MATERIAL TO BE ALUMINUM 6061-T6 UNLESS OTHERWISE NOTED

3 HANDRAIL @ STAIRS DETAIL
N.T.S.

DRAFT NOT FOR CONSTRUCTION

E2 Consulting Engineers, Inc.
1900 Powell Street, Ste. 250
Emeryville, CA 94608
(510) 652-1164

CH2MHILL®

NO.	DATE	DESCRIPTION	GM/SPEC	DWN	CHKD	SUPV	APVD BY
9	09/08/14	PRE-FINAL (90%) DESIGN	MD	KJ	VMB	VMB	

REVISIONS

APPROVED BY
SO
SUPV VMB
DSGN KDD
DWN MD
CHKD KJ
OK VMB
DATE 6/30/14
SCALES AS NOTED

TOPOCK GROUNDWATER REMEDIATION PROJECT
REMEDY - PRODUCED WATER CONDITIONING PLANT PLAN, SECTIONS AND DETAILS
GAS TRANSMISSION & DISTRIBUTION
PACIFIC GAS AND ELECTRIC COMPANY
SAN FRANCISCO, CALIFORNIA

MICROFILM
BILL OF MATL
DWG LIST
SUPSDS
SUPSD BY
SHEET NO. of SHEETS
S-12-17
REV 0

PLOT TIME: $PLOTTIME
PLOT DATE: $PLOTDATE
FILENAME: E2-S-XXX-1204.dwg

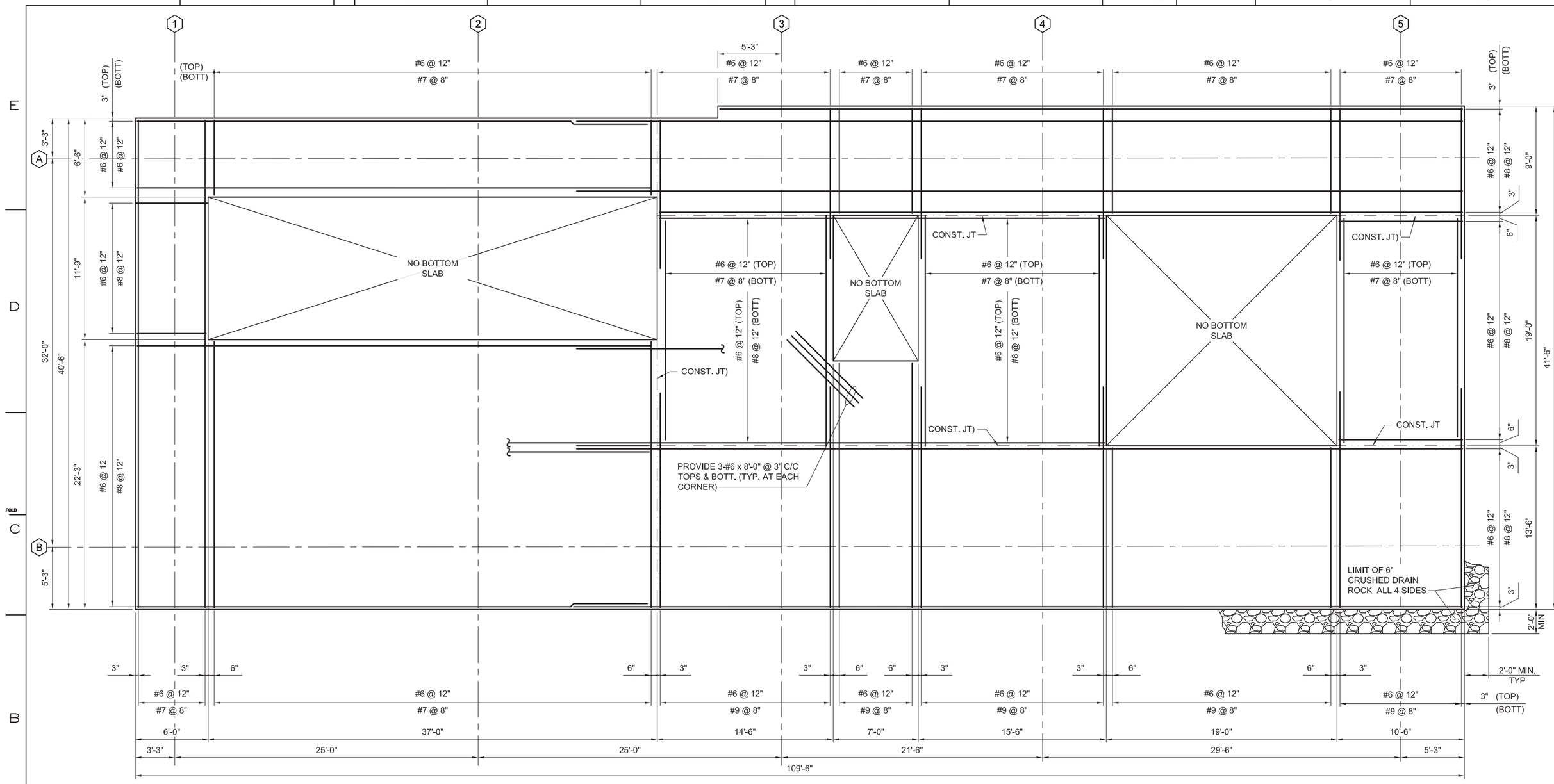

BOTTOM SLAB REINF. PLAN

1/4" = 1'-0"

NOTES:

1. MIN. LAP ARE:

BAR SIZE #	LAP
6	4'-0"
7	5'-10"
8	6'-8"
9	7'-7"

2. TOP AND BOTT. BARS TO HAVE 90° BEND @ FACE OF BOTT. SLAB.
3. MINIMUM COVER FOR REINFORCING BARS"
   TOP = 2"
   BOTT. = 3"

DRAFT
NOT FOR
CONSTRUCTION

E2 Consulting Engineers, Inc.
1900 Powell Street, Ste. 250
Emeryville, CA 94608
(510) 652-1164

CH2MHILL®

NO.	DATE	DESCRIPTION	GM/SPEC	DWN	CHKD	SUPV	APVD BY
0	09/08/14	PRE-FINAL (90%) DESIGN		MD	KJ	VMB	VMB

REVISIONS

APPROVED BY
SO
SUPV VMB
DSGN KDD
DWN MD
CHKD KJ
OK VMB
DATE 6/30/14
SCALES 1/4"=1'-0"

TOPOCK GROUNDWATER REMEDIATION PROJECT
REMEDY - PRODUCED WATER CONDITIONING PLANT BUILDING REINFORCING PLAN
GAS TRANSMISSION & DISTRIBUTION
PACIFIC GAS AND ELECTRIC COMPANY
SAN FRANCISCO, CALIFORNIA

MICROFILM
BILL OF MATL
DWG LIST
SUPSDS
SUPSD BY
SHEET NO. of SHEETS
S-12-18
REV 0

FILENAME: E2-S-XXX-1201.dwg
PLOT DATE: $PLOTDATE PLOT TIME: $PLOTTIME

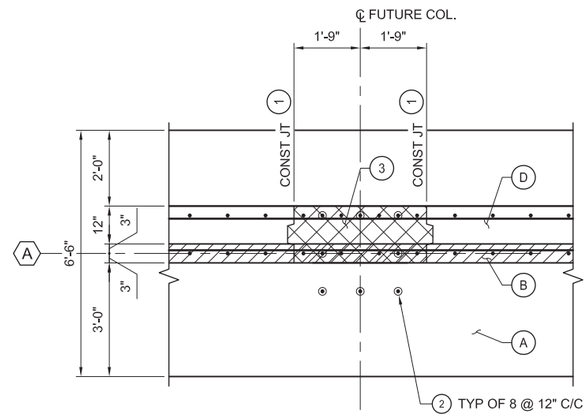

NOTES:

1. SLAB-ON-GRADE NOT SHOWN FOR CLARITY.
2. FOR WALL REINF. SEE SECTION C ON DWG. S-12-10.

PLAN

1 DETAIL
1/2" = 1'-0"
S-12-01, S-12-02

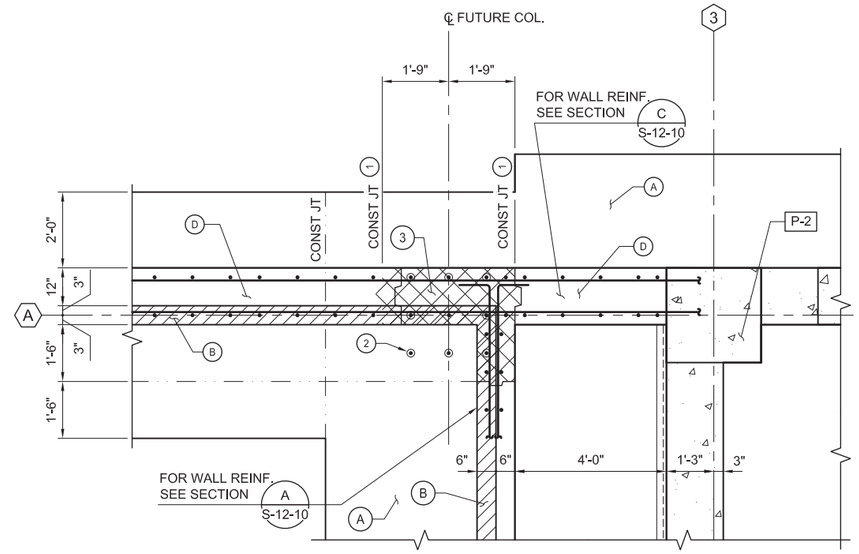

PLAN

3 DETAIL
1/2" = 1'-0"
S-12-01, S-12-02

KEY NOTES:

1. WALL VERTICAL CONST. JT. SEE DETAIL ON DWG. S-00-02.
2. PROVIDE 8-#7 DOWELS REINF. BAR SPLICERS WITH PLASTIC CAP FOR FUTURE COLUMNS @ 12" C/C.
3. WALL TO BE REMOVED FOR FUTURE CONSTRUCTION.

TABLE OF ELEVATION		
EL.	ELEVATION	REMARK
A	622.00	TOP OF FOOTING
B	624.00	TOP OF SHELF FOR SLAB-ON-GRADE
C	632.00	TOP OF WALL
D	626.17	TOP OF CONC.
E	626.00	TOP OF GRATING

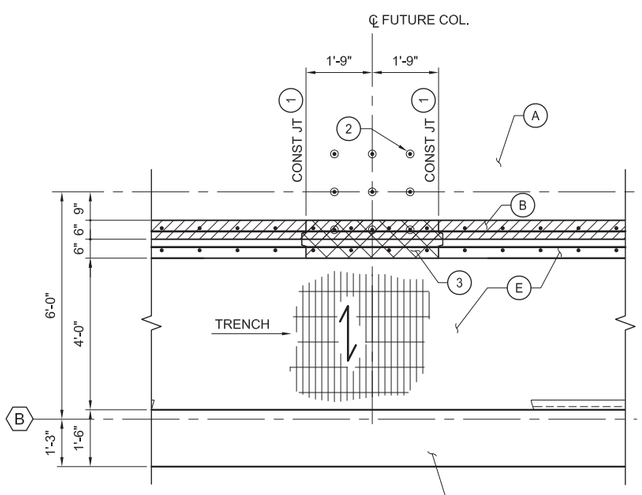

PLAN

2 DETAIL
1/2" = 1'-0"
S-12-01, S-12-02

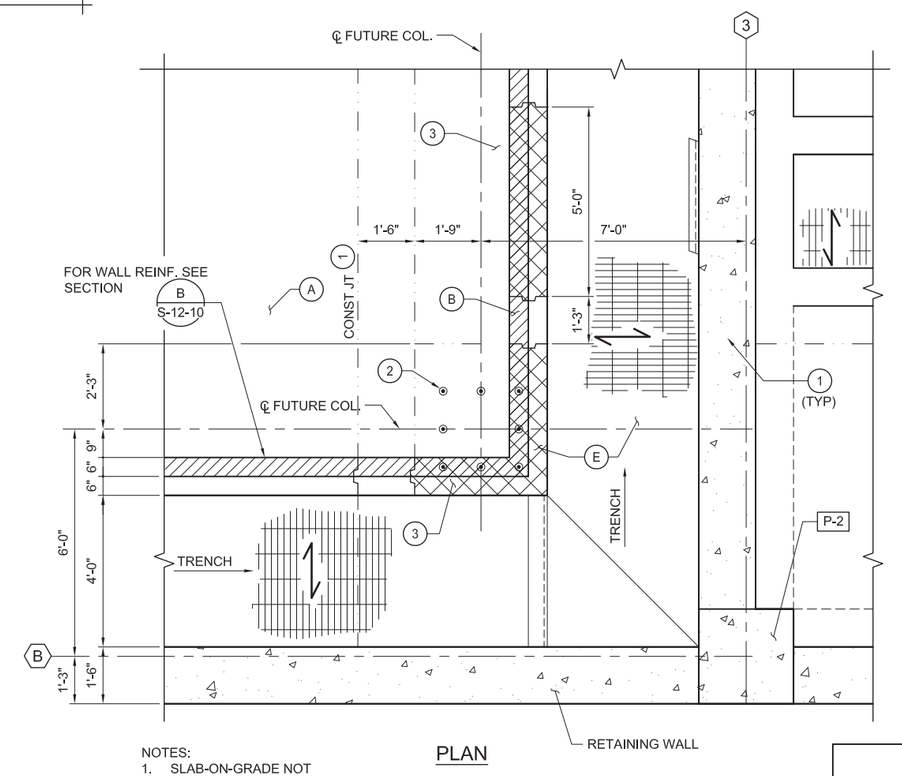

NOTES:

1. SLAB-ON-GRADE NOT SHOWN FOR CLARITY

PLAN

4 DETAIL
1/2" = 1'-0"
S-12-01, S-12-02

DRAFT NOT FOR CONSTRUCTION

E2 Consulting Engineers, Inc.
1900 Powell Street, Ste. 250
Emeryville, CA 94608
(510) 652-1164

CH2MHILL®

NO.	DATE	DESCRIPTION	GM/SPEC	DWN	CHKD	SUPV	APVD BY
0	09/08/14	PRE-FINAL (90%) DESIGN		MD	KJ	VMB	VMB

REVISIONS

APPROVED BY: SO; SUPV VMB; DSGN KDD; DWN MD; CHKD KJ; OK VMB; DATE 6/30/14; SCALES 1/2"=1'-0"

TOPOCK GROUNDWATER REMEDIATION PROJECT
REMEDY - PRODUCED WATER CONDITIONING PLANT BUILDING SECTIONS AND DETAILS
GAS TRANSMISSION & DISTRIBUTION
PACIFIC GAS AND ELECTRIC COMPANY
SAN FRANCISCO, CALIFORNIA

MICROFILM
BILL OF MATL
DWG LIST
SUPSDS
SUPSD BY
SHEET NO. S-12-19 of SHEETS
REV 0

PLOT DATE: $PLOTDATE PLOT TIME: $PLOTTIME
FILENAME: E2-S-XXX-1201.dwg

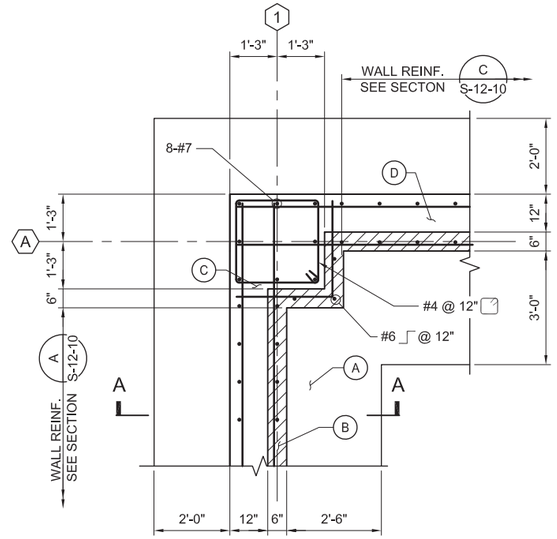

PLAN

1 DETAIL
1/2" = 1'-0"
S-12-01, S-12-02

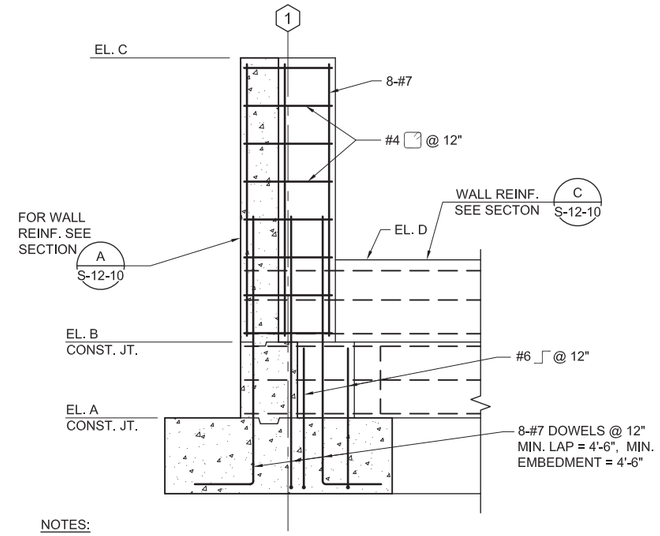

NOTES:

1. SLAB-ON-GRADE NOT SHOWN FOR CLARITY.

SECTION A-A
1/2" = 1'-0"

KEY NOTES:

FOR KEY NOTES, SEE DWG. S-12-19.

TABLE OF ELEVATION		
EL.	ELEVATION	REMARK
A	622.00	TOP OF FOOTING
B	624.00	TOP OF SHELF FOR SLAB-ON-GRADE
C	632.00	TOP OF WALL
D	626.17	TOP OF CONC.
E	626.00	TOP OF GRATING

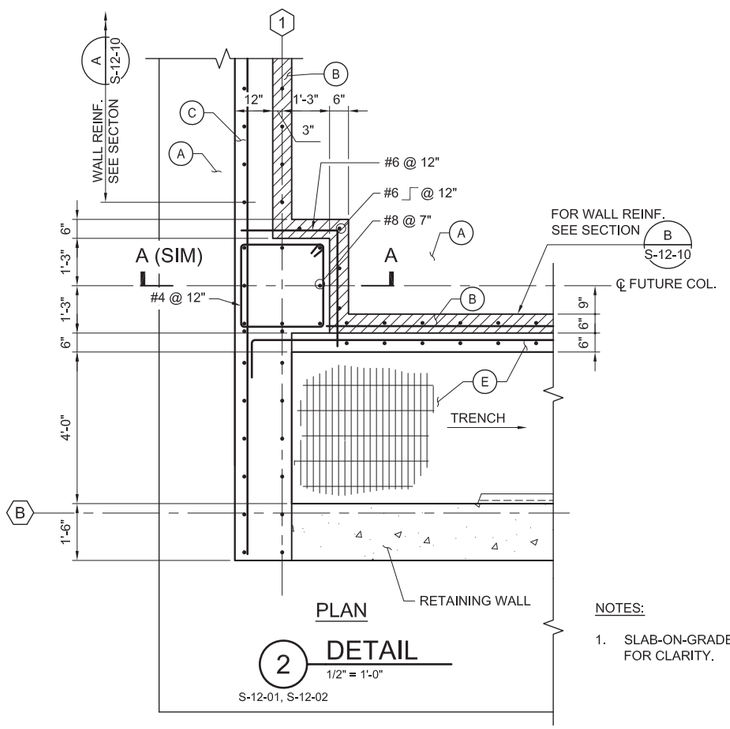

PLAN

2 DETAIL
1/2" = 1'-0"
S-12-01, S-12-02

NOTES:

1. SLAB-ON-GRADE NOT S
FOR CLARITY.

DRAFT
NOT FOR
CONSTRUCTION

E2 Consulting Engineers, Inc.
1900 Powell Street, Ste. 250
Emeryville, CA 94608
(510) 652-1164

CH2MHILL®

NO.	DATE	DESCRIPTION	GM/SPEC	DWN	CHKD	SUPV	APVD BY
0	09/08/14	PRE-FINAL (90%) DESIGN		MD	KJ	VMB	VMB

REVISIONS

APPROVED BY
SO
SUPV VMB
DSGN KDD
DWN MD
CHKD KJ
OK VMB
DATE 6/30/14
SCALES 1/2"=1'-0"

TOPOCK GROUNDWATER REMEDIATION PROJECT
REMEDY - PRODUCED WATER CONDITIONING PLANT BUILDING SECTIONS AND DETAILS
GAS TRANSMISSION & DISTRIBUTION
PACIFIC GAS AND ELECTRIC COMPANY
SAN FRANCISCO, CALIFORNIA

MICROFILM
BILL OF MATL
DWG LIST
SUPSDS
SUPSD BY
SHEET NO. of SHEETS
S-12-20
REV 0

PLOT DATE: $PLOTDATE PLOT TIME: $PLOTTIME
FILENAME: E2-S-XXX-1201.dwg

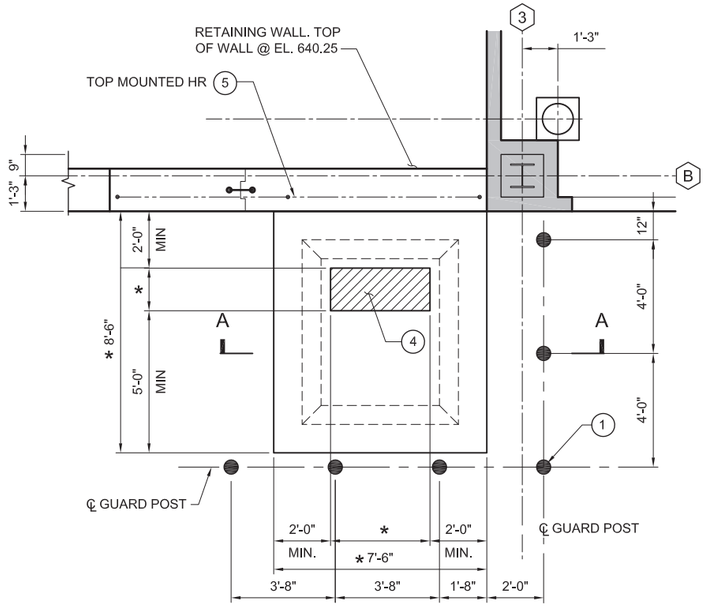

PLAN

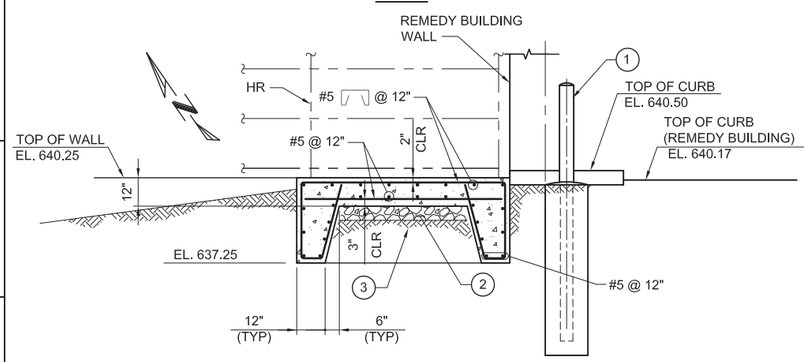

SECTION A-A

1 DETAIL - HEAT PUMP PAD

3/8" = 1'-0"

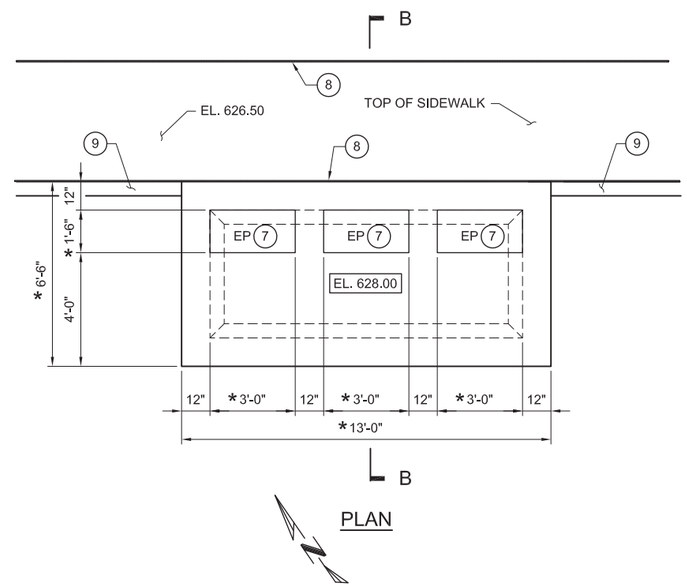

PLAN

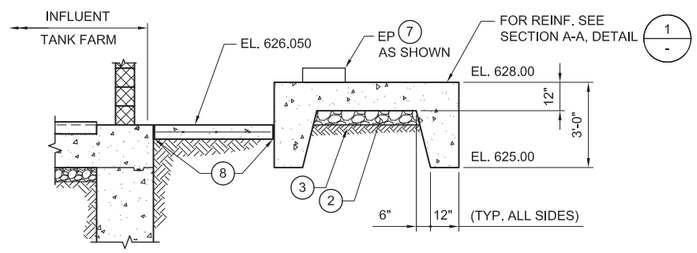

SECTION B-B

2 DETAIL - COMPRESSOR PAD

3/8" = 1'-0"

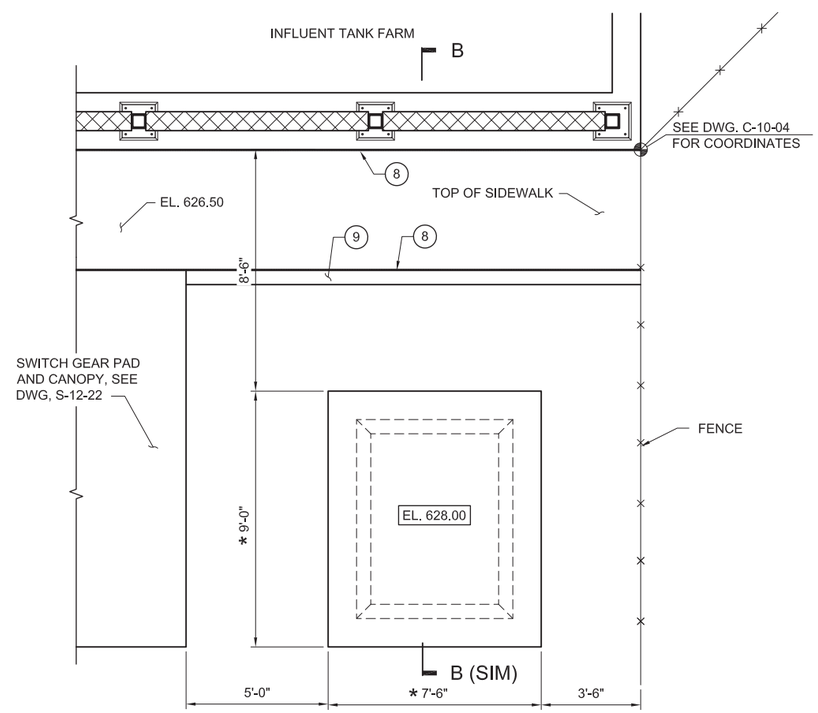

PLAN

3 DETAIL - TRANSFORMER PAD

3/8" = 1'-0"

C-10-04

KEY NOTES;

1. GUARD POSTS, SEE DETAIL 5 ON S-00-04.
2. 6-INCH CRUSHED DRAIN ROCK.
3. SUBGRADE. COMPACTED TO 95%.
4. HEAT PUMP. DIMENSIONS AND ANCHORAGE PER APPROVED SUBMITTALS.
5. TOP MOUNTED HR WITH KICK PLATE, SEE DETAIL 4 ON S-00-03.
6. PROVIDE CORNER REINFORCING PER DETAIL 5 ON S-00-02.
7. EP INDICATES EQUIPMENT PAD, SEE DETAIL 10 ON DWG. S-00-02.
8. 1/2" EXPANSION JOINT MATERIAL W/ 1/2"x1/2" SEALANT AT TOP.
9. 6-INCH CONCRETE CURB, SEE DETAIL 4 ON DWG. C-07-09.

NOTES:

* 1. DIMENSIONS MARKED WITH AN ASTERISK TO BE VERIFIED WITH APPROVED SUBMITTALS.

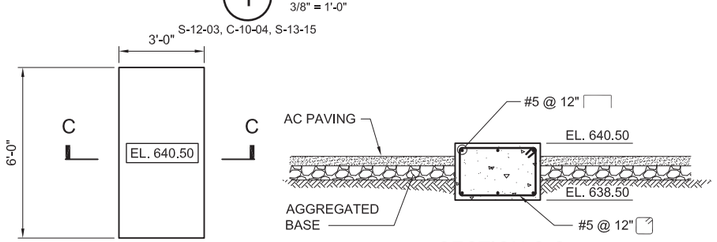

SECTION C-C

PLAN

4 DETAIL - GENERATOR CONNECTION PANEL PAD

3/8" = 1'-0"

C-10-04

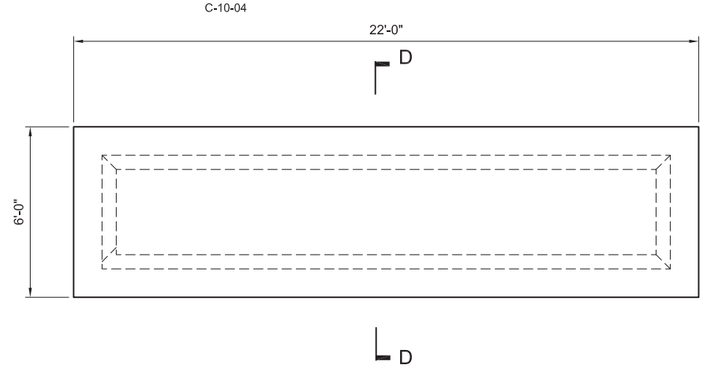

PLAN

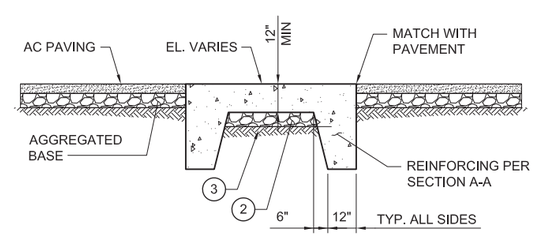

SECTION D-D

5 DETAIL - GENERATOR PAD

3/8" = 1'-0"

C-10-04

DRAFT NOT FOR CONSTRUCTION

E2 Consulting Engineers, Inc.
1900 Powell Street, Ste. 250
Emeryville, CA 94608
(510) 652-1164

CH2MHILL®

NO.	DATE	DESCRIPTION	GM/SPEC	DWN	CHKD	SUPV	APVD BY
0	09/08/14	PRE-FINAL (90%) DESIGN		MD	KJ	VMB	VMB

REVISIONS

APPROVED BY: SO; SUPV VMB; DSGN VMB; DWN MD; CHKD KJ; OK VMB; DATE 6/30/14; SCALES 3/8"=1'-0"

TOPOCK GROUNDWATER REMEDIATION PROJECT
REMEDY - PRODUCED WATER CONDITIONING PLANT
EQUIP. PAD-PLAN, SECTIONS AND DETAILS
GAS TRANSMISSION & DISTRIBUTION
PACIFIC GAS AND ELECTRIC COMPANY
SAN FRANCISCO, CALIFORNIA

MICROFILM
BILL OF MATL
DWG LIST
SUPSDS
SUPSD BY
SHEET NO. S-12-21 of SHEETS
REV 0

FILENAME: E2-S-XXX-1201.dwg
PLOT DATE: $PLOTDATE PLOT TIME: $PLOTTIME
N1808

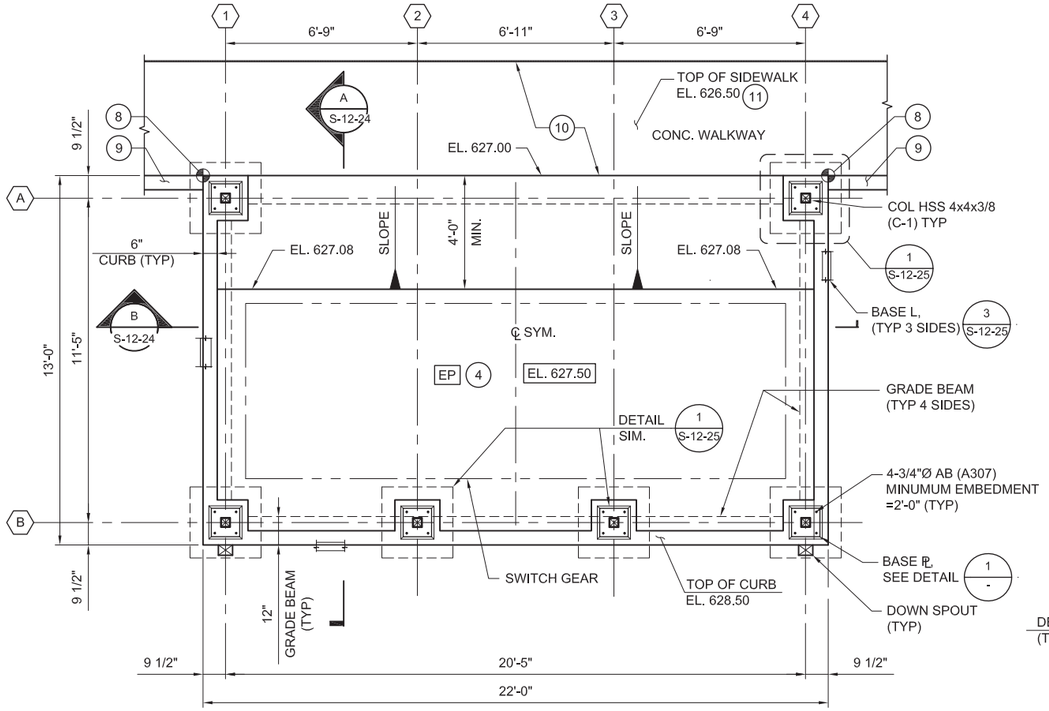

FOUNDATION AND FLOOR PLAN

3/8" = 1'-0"

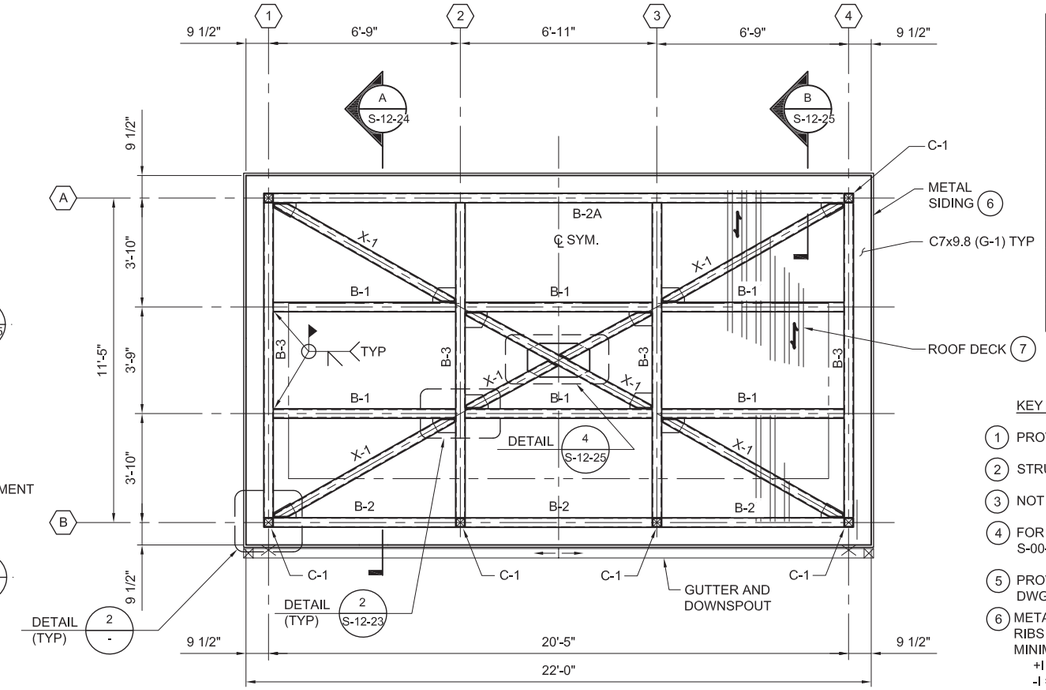

ROOF FRAMING PLAN

3/8" = 1'-0"

BEAM COLUMN SCHEDULE			
MARK	SIZE	WALL "T"	REMARKS
B-1	HSS 4x4	1/4"	
B-2	HSS 4x4	1/4"	
B-2A	HSS 6x4	1/4"	
B-3	HSS 4x4	3/8"	
C-1	HSS 4x4	3/8"	
X-1	HSS 4x4	3/8"	
X-2	HSS 4x4	1/4"	DWG. S-12-23
X-3	HSS 4x4	3/8"	DWG. S-12-24
G-1	C7x9.5		GIRT

KEY NOTES

1. PROVIDE 6" CRUSHED DRAIN ROCK
2. STRUCTURAL FILL ~ 90% COMPACTION
3. NOT USED.
4. FOR EQUIPMENT PAD (EP) SEE DETAIL 10 ON DWG. S-00-02.
5. PROVIDE CORNER REINFORCING PER DETAIL 5 ON DWG. S-00-02
6. METAL SIDING: 3/4" HIGH X 36" WIDE PANEL (6 RIBS @ 6" C/C PER PANEL) GALVANIZED 24 GAGE, MINIMUM PROPERTIES/LF OF WIDTH:
   +I = 0.0323 IN^4
   -I = 0.0220 IN^3
   +S = 0.0592 IN^3
   -S = 0.0538 IN^3
7. ROOF DECK: 1 1/2" HIGH X 36" WIDE PANEL (6 RIBS @ 6" C/C PER PANEL) GALVANIZED 18 GAGE, MINIMUM PROPERTIES/LF OF WIDTH:
   I = 0.29 IN^4/LF
   +S = 0.315 IN^3/LF
   -S = 0.316 IN^3/LF
   PROVIDE 2" RIGID INSULATION AND STANDING SEAM ROOF.
8. FOR COORDINATES, SEE DWG. C-10-04.
9. 6" CONCRETE CURB. SEE DETAIL 4 ON DWG. C-07-09.
10. 1/2" EXPANSION JOINT MATERIAL W/ 1/2"xz1/2" JOINT SALANT AT TOP.
11. FOR SIDEWALK, SEE DETAIL 8 ON DWG. S-00-02.

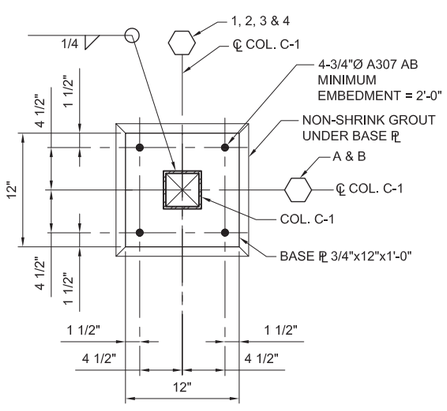

1 DETAIL
1 1/2"' = 1'-0"
S-12-24

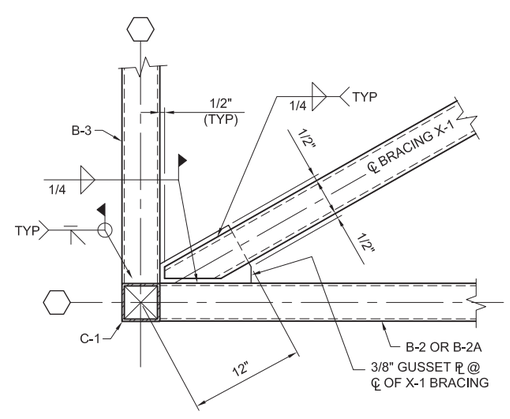

2 DETAIL
1 1/2"' = 1'-0"

DRAFT
NOT FOR
CONSTRUCTION

E2 Consulting Engineers, Inc.
1900 Powell Street, Ste. 250
Emeryville, CA 94608
(510) 652-1164

CH2MHILL®

NO.	DATE	DESCRIPTION	GM/SPEC	DWN	CHKD	SUPV	APVD BY
0	09/08/14	PRE-FINAL (90%) DESIGN		MD	KJ	VMB	VMB

REVISIONS

APPROVED BY
SO
SUPV VMB
DSGN KJ
DWN MD
CHKD KDD
OK VMB
DATE 6/30/14
SCALES 3/8"=1'-0"

TOPOCK GROUNDWATER REMEDIATION PROJECT
SWITCH GEAR CANOPY
PLANS

GAS TRANSMISSION & DISTRIBUTION
PACIFIC GAS AND ELECTRIC COMPANY
SAN FRANCISCO, CALIFORNIA

MICROFILM
BILL OF MATL
DWG LIST
SUPSDS
SUPSD BY
SHEET NO. of SHEETS
S-12-22
REV 0

FILENAME: E2-S-XXX-1203.dwg
PLOT DATE: $PLOTDATE PLOT TIME: $PLOTTIME

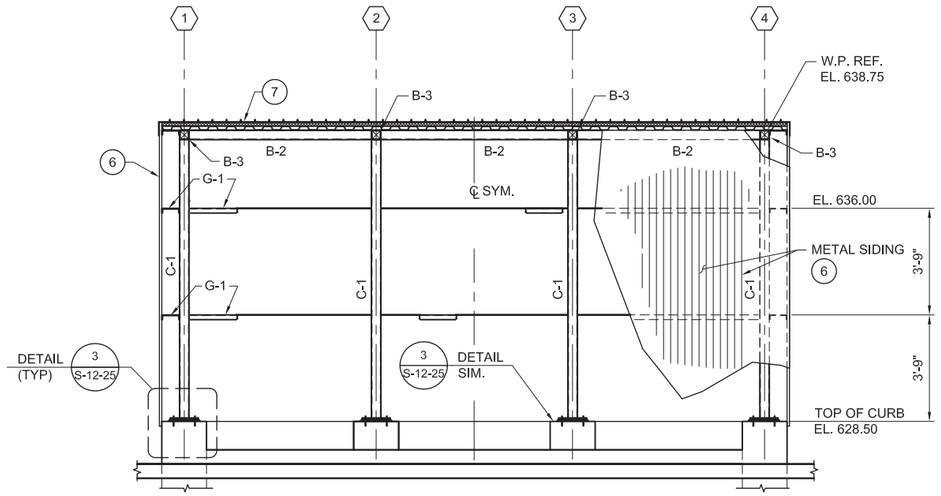

SOUTH ELEVATION @ COL. B

3/8" = 1'-0"

FOR KEY NOTES
SEE DWG. S-12-22

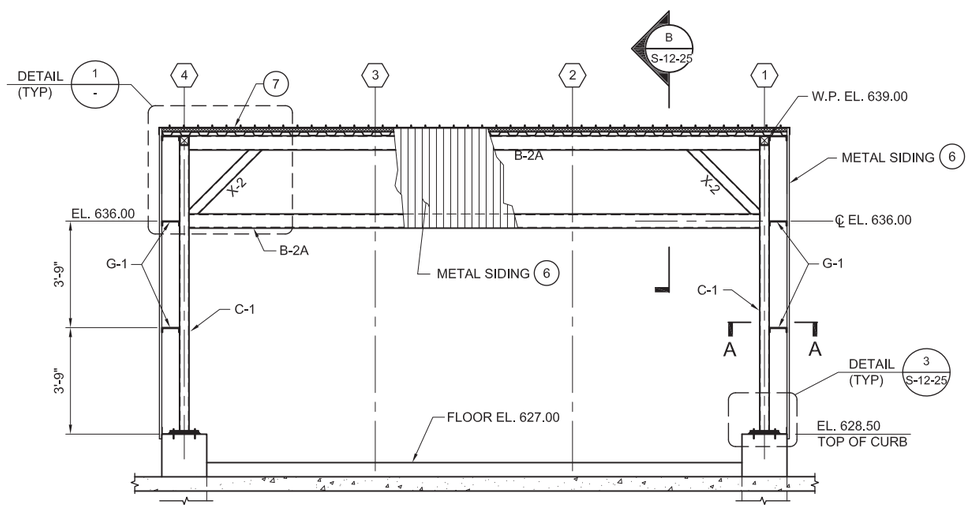

NORTH ELEVATION @ COL. A

3/8" = 1'-0"

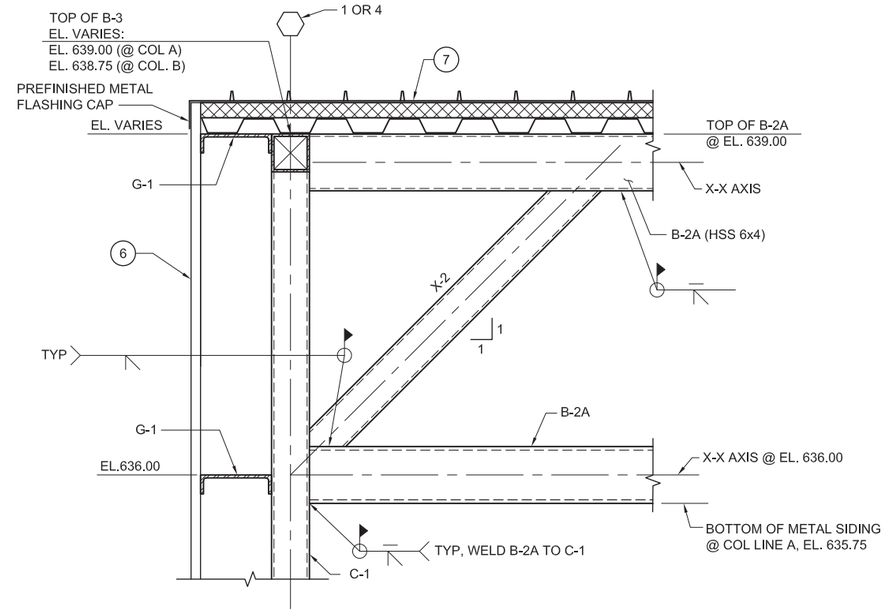

1 DETAIL

1 1/2"" = 1'-0"

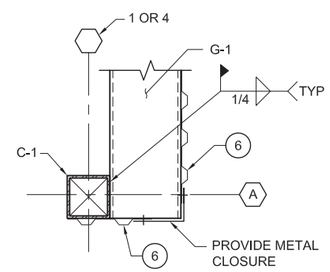

SECTION A-A

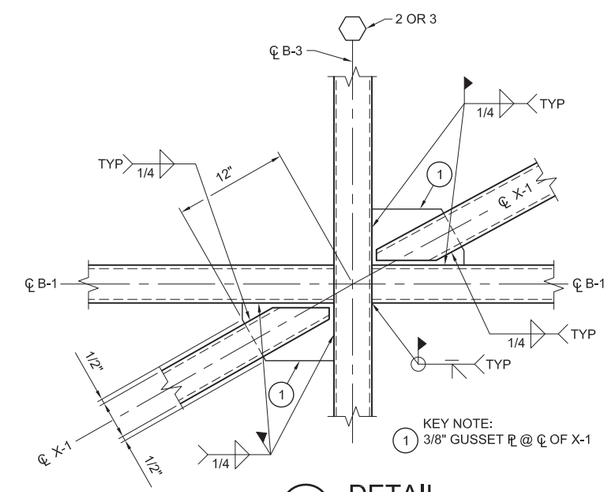

2 DETAIL

1 1/2"" = 1'-0"

S-12-22

DRAFT
NOT FOR
CONSTRUCTION

E2 Consulting Engineers, Inc.
1900 Powell Street, Ste. 250
Emeryville, CA 94608
(510) 652-1164

CH2MHILL®

NO.	DATE	DESCRIPTION	GM/SPEC	DWN	CHKD	SUPV	APVD BY
0	09/08/14	PRE-FINAL (90%) DESIGN		MD	KJ	VMB	VMB

REVISIONS

APPROVED BY
SO
SUPV VMB
DSGN KJ
DWN MD
CHKD KDD
OK VMB
DATE 6/30/14
SCALES 3/8"=1'-0"

TOPOCK GROUNDWATER REMEDIATION PROJECT
SWITCH GEAR CANOPY
FRAMING ELEVATIONS

GAS TRANSMISSION & DISTRIBUTION
PACIFIC GAS AND ELECTRIC COMPANY
SAN FRANCISCO, CALIFORNIA

MICROFILM
BILL OF MATL
DWG LIST
SUPSDS
SUPSD BY
SHEET NO. of SHEETS
S-12-23
REV 0

FILENAME: E2-S-XXX-1203.dwg
PLOT DATE: $PLOTDATE PLOT TIME: $PLOTTIME

N1808

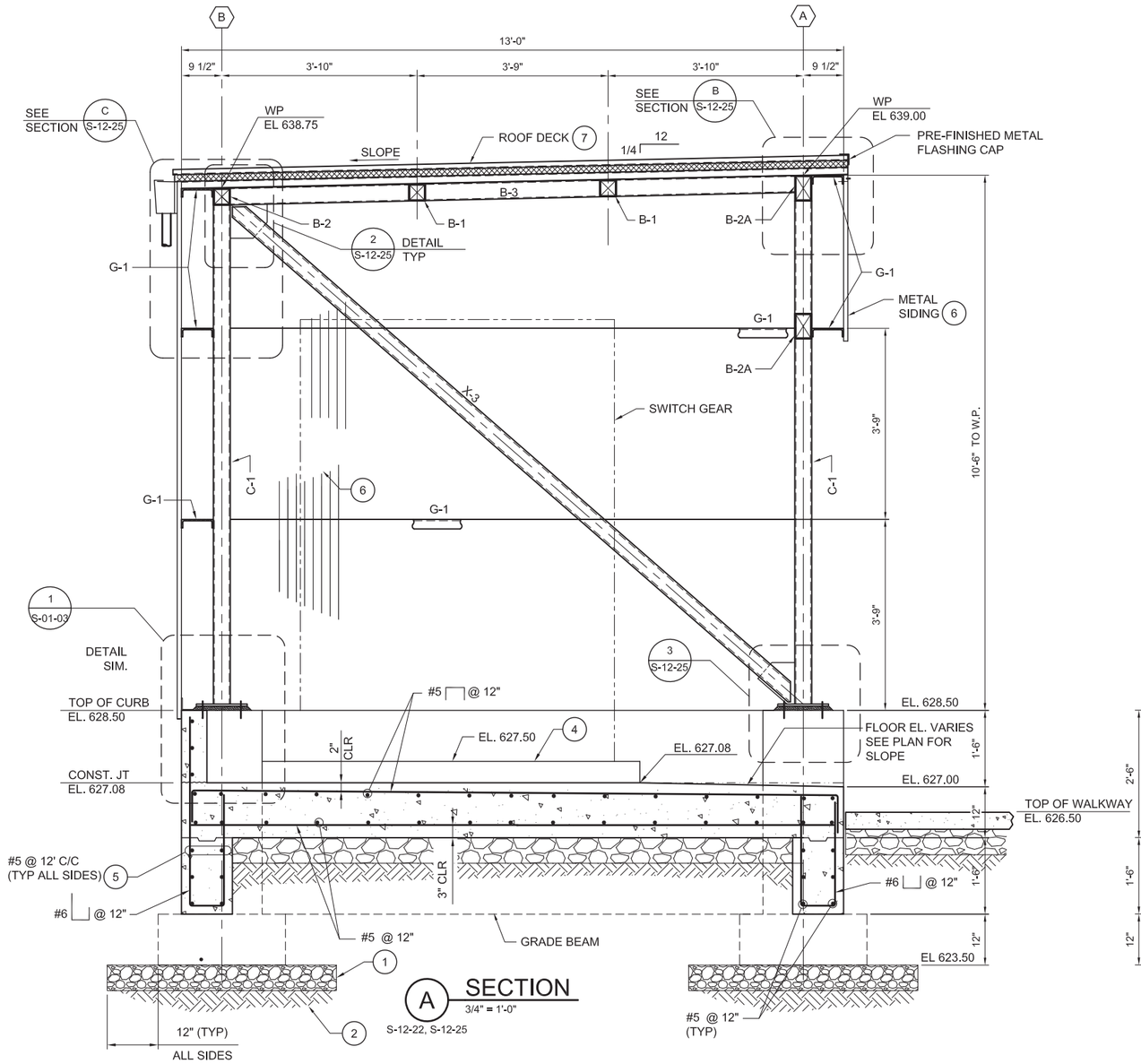

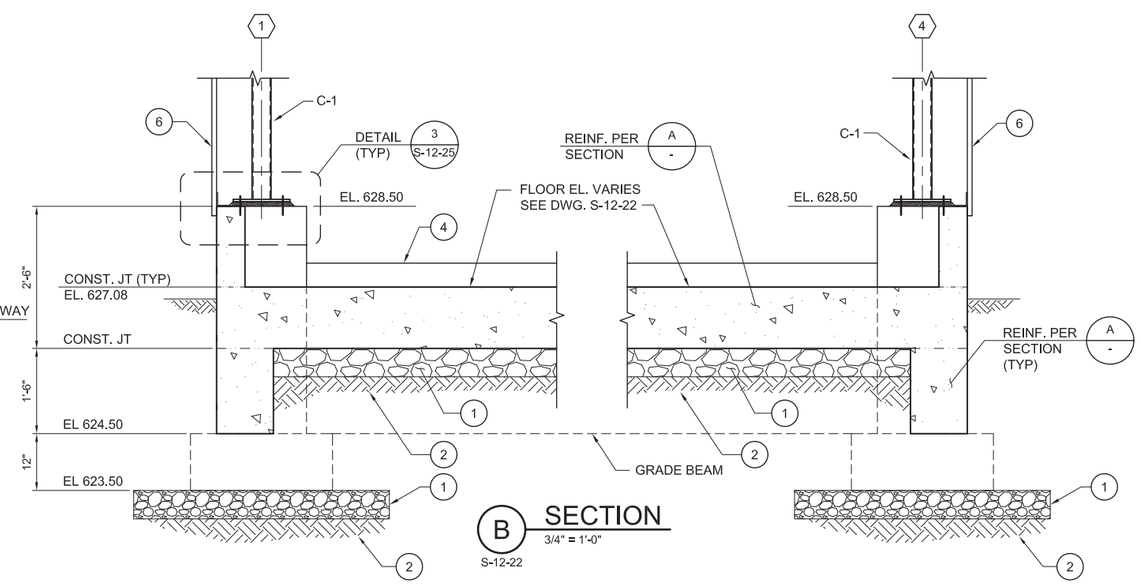

FOR KEY NOTES, SEE SHEET S-12-22

DRAFT NOT FOR CONSTRUCTION

E2 Consulting Engineers, Inc.
1900 Powell Street, Ste. 250
Emeryville, CA 94608
(510) 652-1164

CH2MHILL®

NO.	DATE	DESCRIPTION	GM/SPEC	DWN	CHKD	SUPV	APVD BY
0	09/08/14	PRE-FINAL (90%) DESIGN		MD	KJ	VMB	VMB

REVISIONS

APPROVED BY
ISO
SUPV VMB
DSGN KJ
DWN MD
CHKD KDD
OK VMB
DATE 6/30/14
SCALES 3/4"=1'-0"

TOPOCK GROUNDWATER REMEDIATION PROJECT
SWITCH GEAR CANOPY SECTIONS

GAS TRANSMISSION & DISTRIBUTION
PACIFIC GAS AND ELECTRIC COMPANY
SAN FRANCISCO, CALIFORNIA

MICROFILM
BILL OF MATL
DWG LIST
SUPSDS
SUPSD BY
SHEET NO. of SHEETS
S-12-24
REV 0

FILENAME: E2-S-XXX-1203.dwg
PLOT DATE: $PLOTDATE PLOT TIME: $PLOTTIME

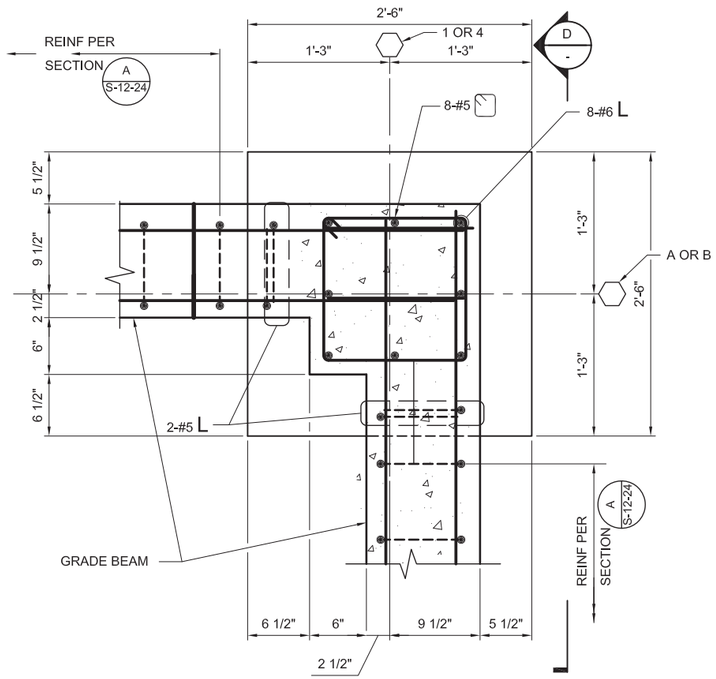

1 DETAIL
1-1/2" = 1'-0"
S-12--22

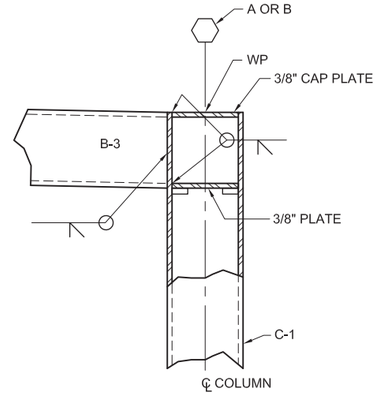

2 DETAIL
3" = 1'-0"
S-12-24

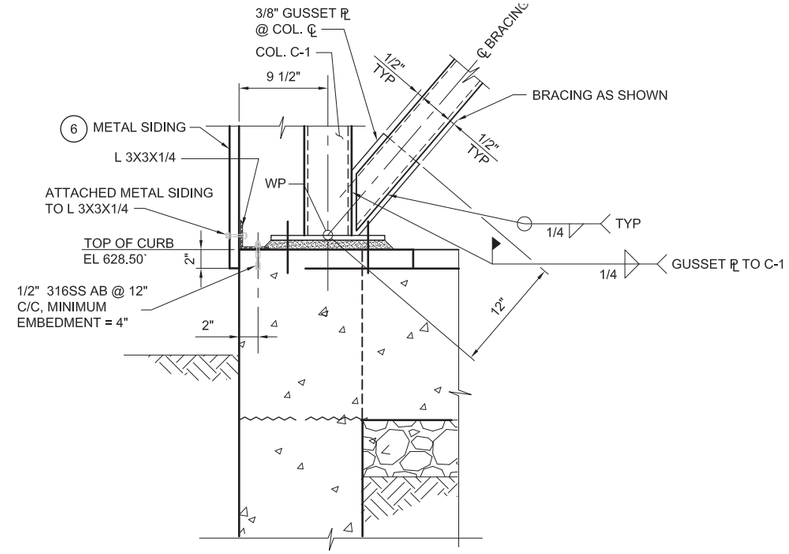

3 DETAIL
1-1/2" = 1'-0"
S-12-22

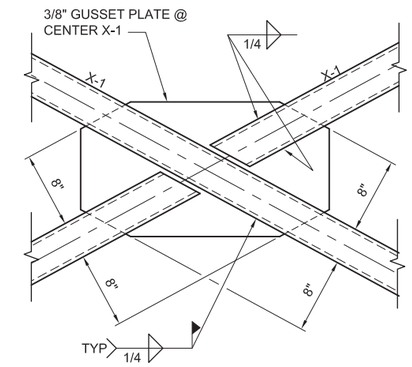

4 DETAIL
1-1/2" = 1'-0"
S-12-22

FOR KEY NOTES, SEE SHEET S-12-22

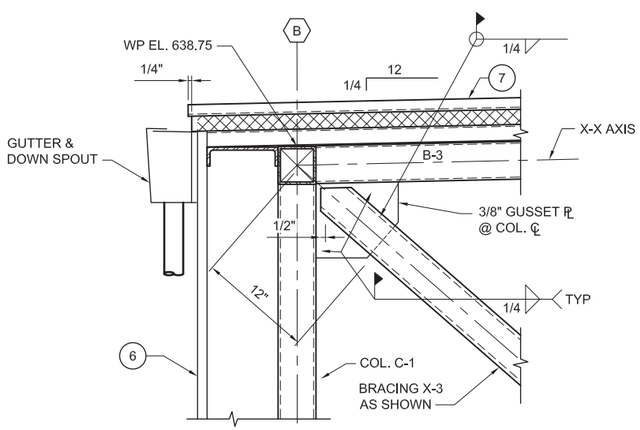

C SECTION
1-1/2" = 1'-0"
S-12-24

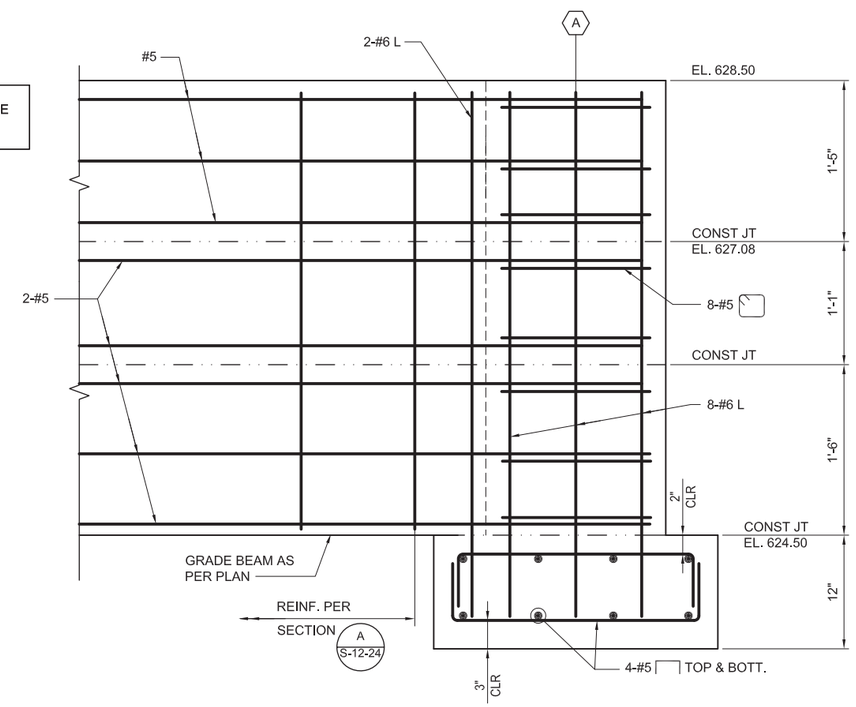

D SECTION
1-1/2" = 1'-0"

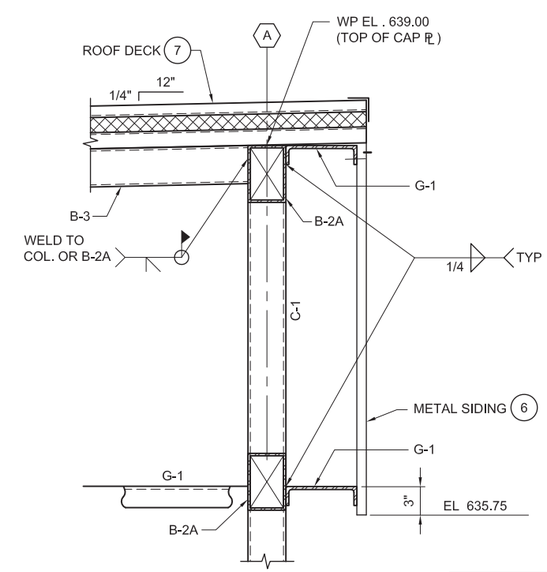

B SECTION
1-1/2" = 1'-0"
S-12-22, S-12-23, S-12-245

DRAFT
NOT FOR
CONSTRUCTION

E2 Consulting Engineers, Inc.
1900 Powell Street, Ste. 250
Emeryville, CA 94608
(510) 652-1164

CH2MHILL®

NO.	DATE	DESCRIPTION	GM/SPEC	DWN	CHKD	SUPV	APVD BY
0	09/08/14	PRE-FINAL (90%) DESIGN		MD	KJ	VMB	VMB

REVISIONS

APPROVED BY	
SO	
SUPV	VMB
DSGN	KJ
DWN	MD
CHKD	KDD
OK	VMB
DATE	6/30/14
SCALES	3/4"=1'-0"

TOPOCK GROUNDWATER REMEDIATION PROJECT
SWITCH GEAR CANOPY
SECTIONS AND DETAILS

GAS TRANSMISSION & DISTRIBUTION
PACIFIC GAS AND ELECTRIC COMPANY
SAN FRANCISCO, CALIFORNIA

MICROFILM
BILL OF MATL
DWG LIST
SUPSDS
SUPSD BY
SHEET NO. of SHEETS
S-12-25
REV 0

PLOT DATE: $PLOTDATE PLOT TIME: $PLOTTIME
FILENAME: E2-S-XXX-1203.dwg

N1808

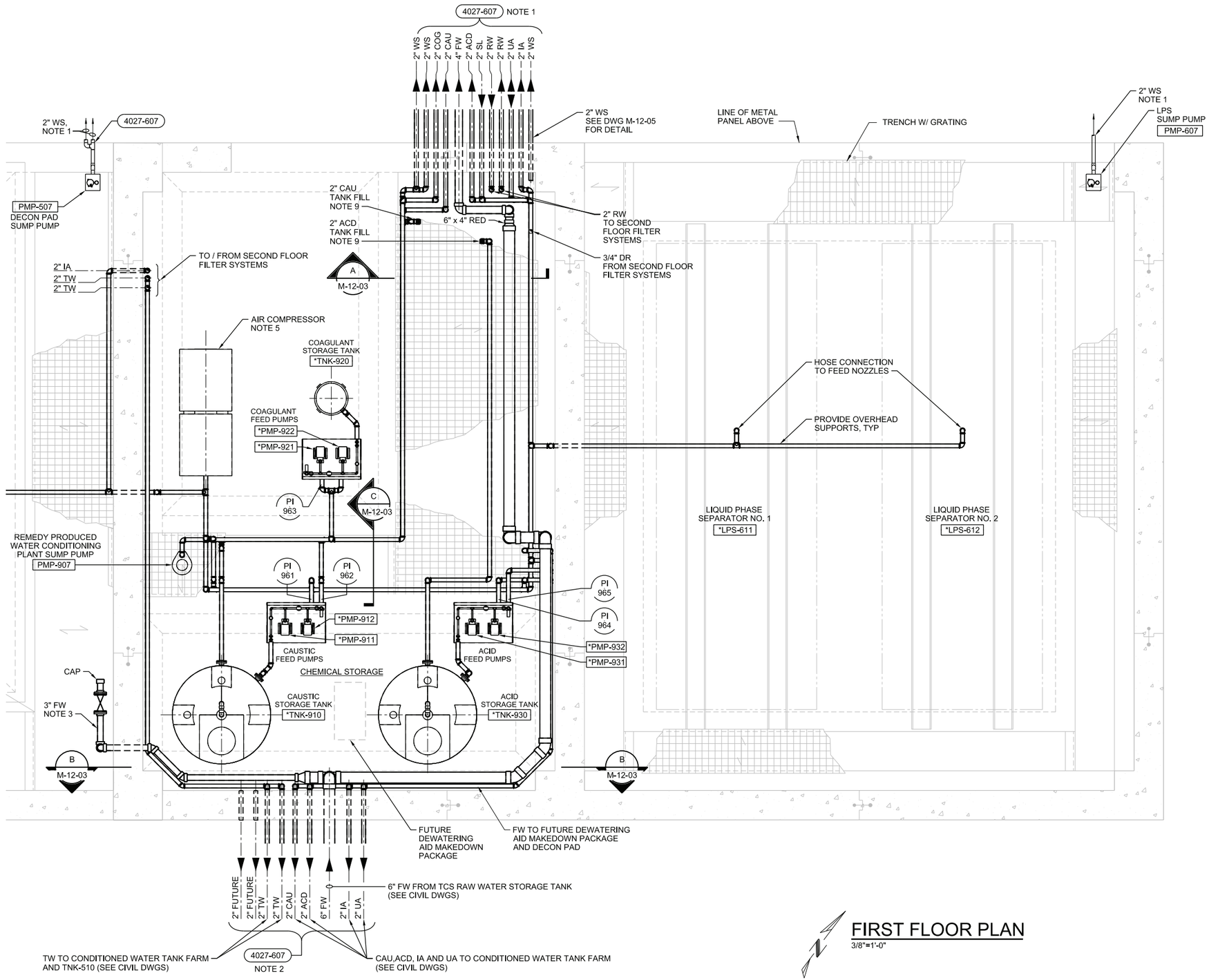

FIRST FLOOR PLAN

3/8"=1'-0"

PIPE LEGEND

ACD	ACID (19% HCL)
CAU	25% CAUSTIC
COG	COAGULANT (FUTURE)
FW	FRESH WATER
IA	INSTRUMENT AIR
LW	LAB WASTE
RW	REMEDY PRODUCED WATER
SL	SLURRY
TW	TREATED (FILTERED) REMEDY PRODUCED WATER
UA	UTILITY AIR
WS	WASTE STREAM

NOTES:

1. INVERT ELEVATION IS AT 624.5' MSL.
2. INVERT ELEVATION IS AT 636.0' MSL.
3. INVERT ELEVATION IS AT 629.0' MSL.
4. SEE A-12-02, S-12-02 THRU 12-04 AND C-10-02, C-12-01 FOR MORE DETAIL.
5. AIR COMPRESSOR SYSTEM SEE SPEC 43 12 01B. COMPRESSED AIR PIPING AND FITTINGS SHALL BE VIEGA PROPRESS COPPER PIPE OR APPROVED EQUAL. WALL THICKNESS SHALL BE SUITABLE FOR COMPRESSED AIR AT 110 PSIG AND 130 F AMBIENT (TYPE K OR BETTER).
6. PIPE SUPPORTS NOT SHOWN. CONTRACTOR TO SUPPORT PIPES IN ACCORDANCE WITH SPEC. 40 05 15.
7. LPS-1 AND LPS-2 PROVIDED BY OWNER.
8. PROVIDE TCS TRUCK FILL PUMP PMP-501. INSTALL ON EQUIPMENT PAD PER DETAIL 10 DWG S-00-02 AT DECONTAMINATION PAD. COORDINATE LOCATION WITH STRUCTURAL DRAWINGS AND OBTAIN APPROVAL FROM ENGINEER PRIOR TO FORMING PAD. PMP-501: CENTRIFUGAL PUMP, 150 GPM AT 90' TDH; SELF-PRIMING AMT/GORMAN RUPP 2876-95, 3450 RPM, 3" SUCTION, 3" DISCHARGE. PROVIDE 3"DRY DISCONNECT COUPLER SUITABLE FOR BRACKISH WATER (4,000 TO 10,000 PPM TDS).
9. PROVIDE TWO 2" DRY DISCONNECT COUPLERS (NPT BY HOSE) POLYPROPYLENE MATERIAL FOR TRANSFERRING 25% CAUSTIC AND 19% HYDROCHLORIC ACID INTO TANK FILL LINES (TNK-910 AND TNK-930). BY KAMVALOK OR EQUAL.

0 1 2 3

SCALE: 3/8"=1'

DRAFT NOT FOR CONSTRUCTION

MICROFILM

CH2MHILL®

NO.	DATE	DESCRIPTION	GM/SPEC	DWN	CHKD	SUPV	APVD BY
0	04/2013	INTERMEDIATE (60%) DESIGN		GJ	BB	JP	CH
1	09/2014	PRE-FINAL (90%) DESIGN		GJ	WF	JP	CH

REVISIONS

APPROVED BY: CH

SO	
SUPV	JP
DSGN	JP
DWN	DC
CHKD	WF
OK	CH
DATE	9/08/14
SCALES	

TOPOCK GROUNDWATER REMEDIATION PROJECT

REMEDY-PRODUCED WATER CONDITIONING PLANT FIRST FLOOR PLAN

GAS TRANSMISSION & DISTRIBUTION

PACIFIC GAS AND ELECTRIC COMPANY

SAN FRANCISCO, CALIFORNIA

BILL OF MATL

DWG LIST

SUPSDS

SUPSD BY

SHEET NO. M-12-01 of SHEETS

REV 1

FILENAME: CH-M-XXX-1201AD.dgn

PLOT DATE: 2014/09/04 PLOT TIME: 10:30:14 AM

N1808

FILENAME: ____DGN __-__-04 ___

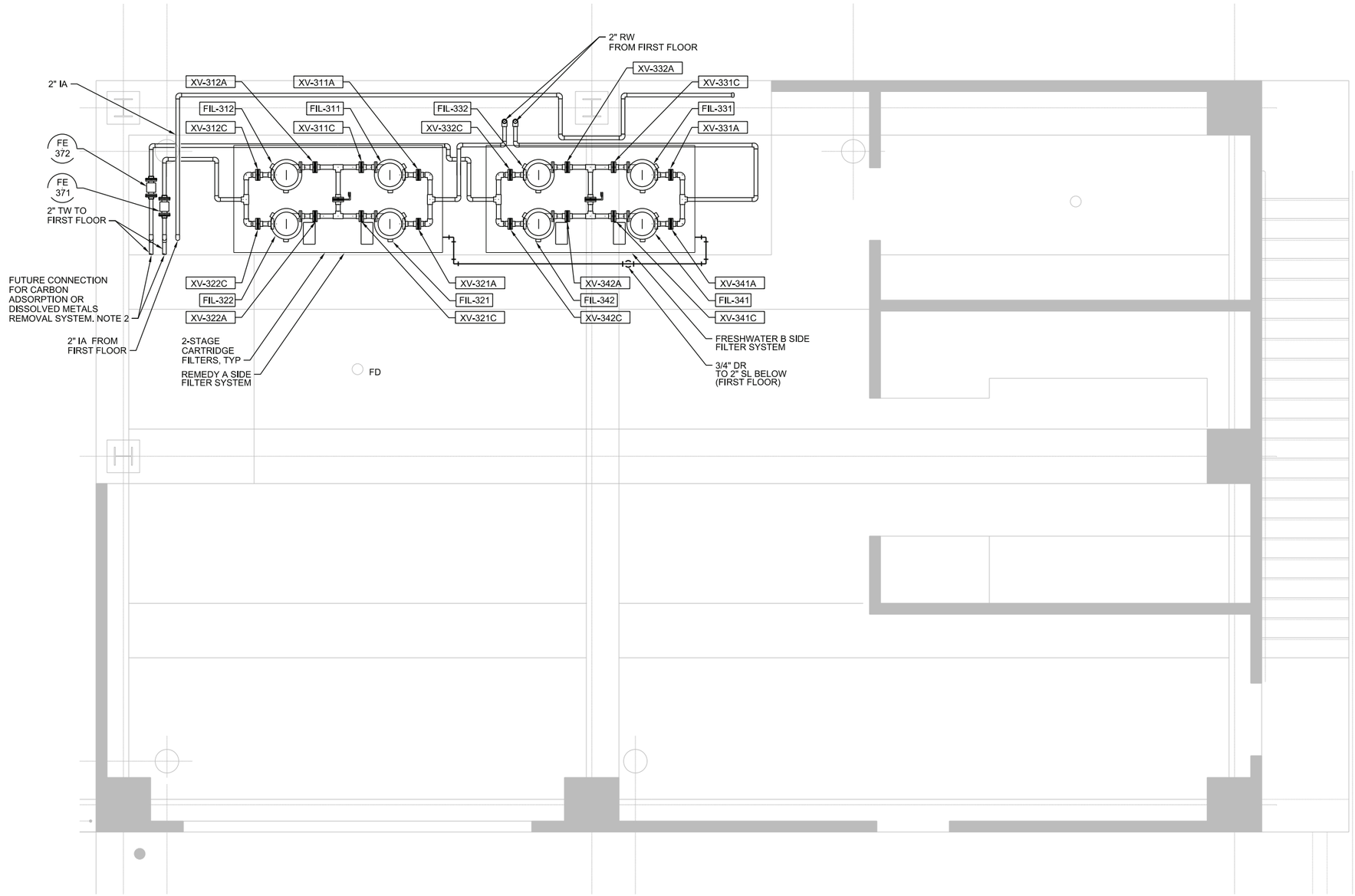

PIPE LEGEND

ACD	ACID (19% HCL)
FW	FRESH WATER
RW	REMEDY PRODUCED WATER
SL	SLURRY
TW	TREATED (FILTERED) REMEDY PRODUCED WATER
WS	WASTE STREAM

NOTES:

1. SEE DRAWINGS A-12-02 AND A-12-07 AND S-12-03 FOR BUILDING DETAILS.
2. DISSOLVED METALS REMOVAL SYSTEM APPLIES TO REMEDY A SIDE ONLY.
3. PIPE SUPPORTS NOT SHOWN. CONTRACTOR TO SUPPORT PIPES IN ACCORDANCE WITH SPEC. 40 05 15.
4. RW, TW, IA, AND DR FLOOR PENETRATIONS PER DETAIL 4027-620. FLOOR DRAIN (FD) SHOWN ON PLUMBING/BUILDING MECHANICAL DWGS.
5. ROUTE RW, TW AND DR PIPING TO CONNECTIONS ON FILTER SKIDS (CONNECTIONS SHOWN ON APPROVED SHOP DRAWINGS).
6. ROUTE INSTRUMENT AIR TO PORT ON FILTER SKIDS (SHOWN ON APPROVED SHOP DRAWINGS). ALL COMPRESSED AIR PIPING AND FITTINGS SHALL BE VIEGA PRO PRESS COPPER PIPE OR APPROVED EQUAL. WALL THICKNESS SHALL BE SUITABLE FOR COMPRESSED AIR AT 110 PSIG AND 130 F AMBIENT (TYPE K OR BETTER).

SECOND FLOOR PLAN

3/8"=1'-0"

0 1 2 3

SCALE: 3/8"=1'

DRAFT
NOT FOR
CONSTRUCTION

CH2MHILL®

NO.	DATE	DESCRIPTION	GM/SPEC	DWN	CHKD	SUPV	APVD BY
0	04/2013	INTERMEDIATE (60%) DESIGN		GJ	BB	JP	CH
1	09/2014	PRE-FINAL (90%) DESIGN		LW	WF	JP	CH

REVISIONS

APPROVED BY
SO
SUPV
DSGN RH
DWN GJ
CHKD BB
OK JP
DATE 9/08/14
SCALES

TOPOCK GROUNDWATER REMEDIATION PROJECT
REMEDY-PRODUCED WATER
CONDITIONING PLANT
SECOND FLOOR PLAN
GAS TRANSMISSION & DISTRIBUTION
PACIFIC GAS AND ELECTRIC COMPANY
SAN FRANCISCO, CALIFORNIA

MICROFILM
BILL OF MATL
DWG LIST
SUPSDS
SUPSD BY
SHEET NO. of SHEETS
M-12-02
REV 1

FILENAME: CH-M-XXX-1202AD.dgn
PLOT DATE: 2014/09/04 PLOT TIME: 10:31:12 AM

N1808

FILENAME: ____DGN __-__-04 ____

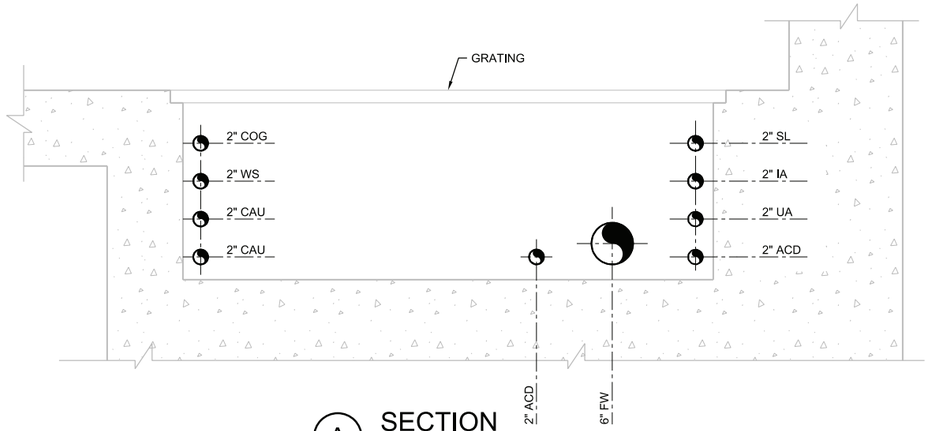

A SECTION
1"=1'-0"
M-12-01

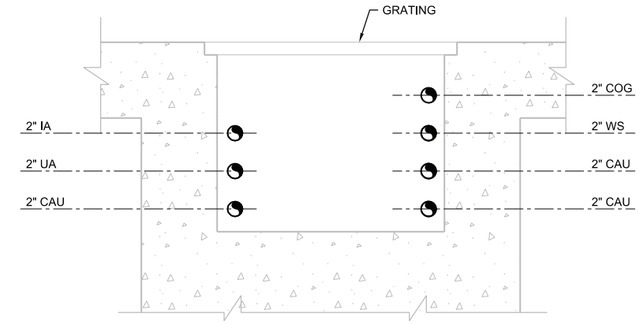

C SECTION
1"=1'-0"
M-12-01

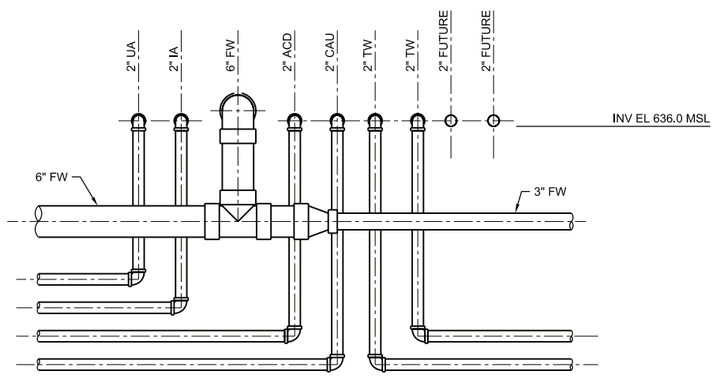

B SECTION
3/4"=1'-0"
M-12-01

DRAFT
NOT FOR
CONSTRUCTION

CH2MHILL®

NO.	DATE	DESCRIPTION	GM/SPEC	DWN	CHKD	SUPV	APVD BY
0	09/2014	PRE-FINAL (90%0 DESIGN		DC	WF	JP	CH

REVISIONS

APPROVED BY
SO
SUPV
DSGN CB
DWN DC
CHKD WF
OK CH
DATE 9/08/14
SCALES

TOPOCK GROUNDWATER REMEDIATION PROJECT
REMEDY-PRODUCED WATER CONDITIONING PLANT SECTIONS
GAS TRANSMISSION & DISTRIBUTION
PACIFIC GAS AND ELECTRIC COMPANY
SAN FRANCISCO, CALIFORNIA

MICROFILM
BILL OF MATL
DWG LIST
SUPSDS
SUPSD BY
SHEET NO. of SHEETS
M-12-03
REV 1

FILENAME: CH-M-XXX-1203AD.dgn
PLOT DATE: 2014\09\04 PLOT TIME: 10:32:03 AM
FILENAME: ____DGN __-__-04 ____
N1808

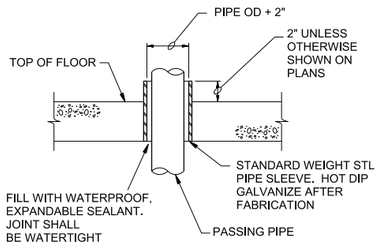

1 FLOOR SLEEVE

NTS

M-12-05

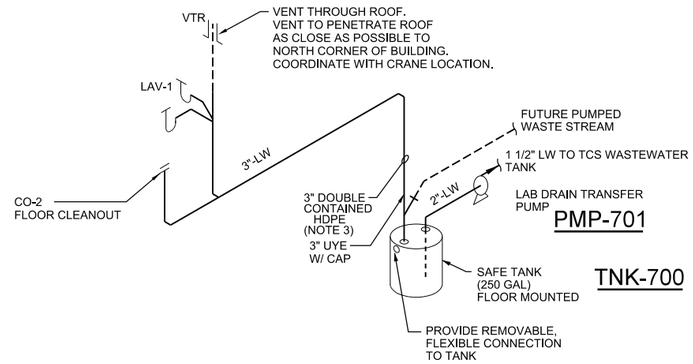

NOTES:

1. PROVIDE PUMP CONTROL SYSTEM WITH HI AND HI-HI LOCAL ALARMS FOR TANK LEVEL.
2. PROVIDE IN-LINE PUMP (PMP-701) FOR DISCHARGE TO TCS WASTEWATER TANK.
3. SEE SPECIFICATION 221001.08.

2 LAB DRAIN

NTS

M-12-05

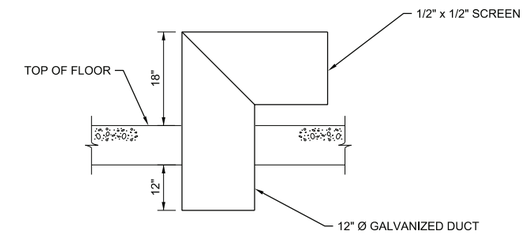

3 VENTILATION DUCT

NTS

M-12-06

NOTE: COORANATE W/ ARCH DWGS FOR FLOOR PENETRATION DETAILS.

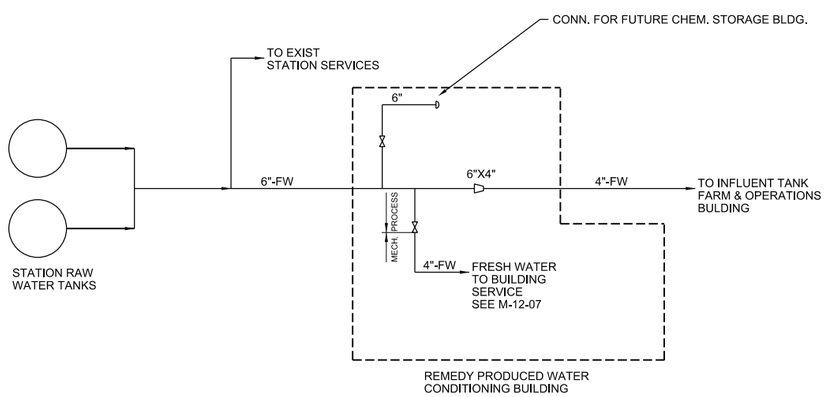

4 FRESH WATER SUPPLY SCHEMATIC

NTS

M-12-05

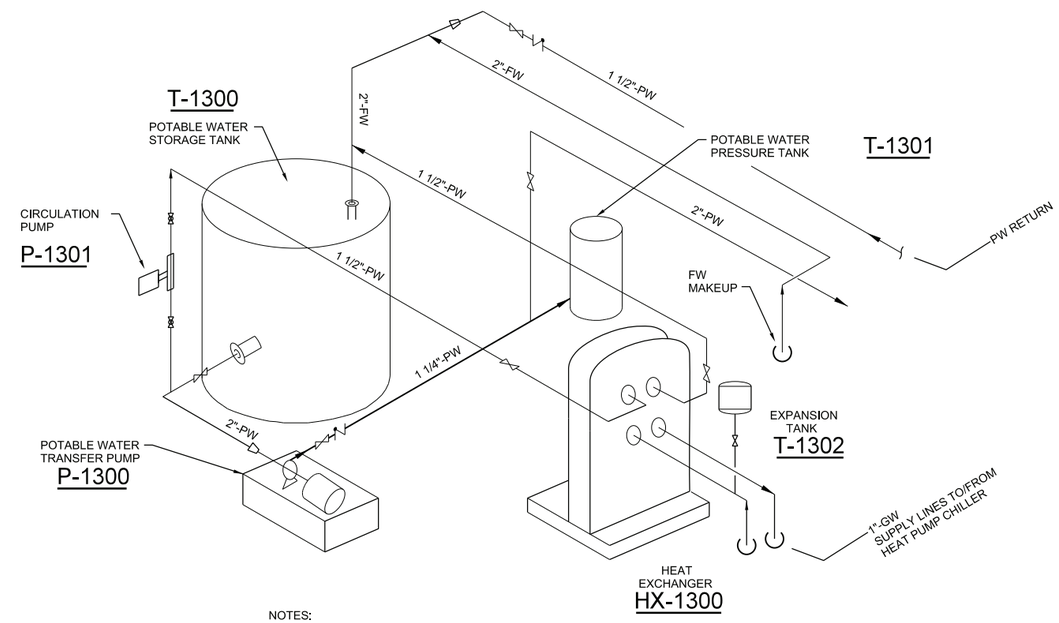

NOTES:

1. REFER TO M-12-07 FOR ADDITIONAL DETAILS AND COMPONENTS NOT SHOWN ON THIS DETAIL.

5 POTABLE WATER EQPT SCHEMATIC

NTS

M-12-04

DRAFT NOT FOR CONSTRUCTION

CH2MHILL®

NO.	DATE	DESCRIPTION	GM/SPEC	DWN	CHKD	SUPV	APVD BY
0	11/2011	PRELIMINARY (30%) DESIGN		YMF	WF	JP	CH
1	09/2012	INTERMEDIATE (60) DESIGN		YMF	WF	JP	CH
2	09/2014	PRE-DESIGN (90%) DESIGN		DC	WF	JP	CH

REVISIONS

APPROVED BY: SO; SUPV; DSGN JQ; DWN YMF; CHKD BB; OK JP; DATE 9/08/14; SCALES

TOPOCK GROUNDWATER REMEDIATION PROJECT

REMEDY-PRODUCED WATER CONDITIONING PLANT HVAC & PLUMBING DETAILS

GAS TRANSMISSION & DISTRIBUTION

PACIFIC GAS AND ELECTRIC COMPANY

SAN FRANCISCO, CALIFORNIA

MICROFILM; BILL OF MATL; DWG LIST; SUPSDS; SUPSD BY; SHEET NO. M-12-04 of SHEETS; REV 1

FILENAME: PGE_XXXXXXXXMD.DGN

PLOT DATE: 2014/09/04 PLOT TIME: 10:33:59 AM

N1808

FILENAME: ____DGN __-__-04 ____

SHEET KEYNOTES

1. 250 GALLON CAPACITY DOUBLE WALLED POLYETHYLENE SAFE-TANK WITH CONTROLS, SEE DETAIL 2 ON M-12-04.
2. MINI SPLITCONDENSING UNIT, TYP 3.
3. 2" DRAIN FROM SECOND FLOOR, ROUTE TO TRENCH DRAIN AND TERMINATE 6" ABOVE FLOOR.
4. HVAC CONTRACTOR TO PROVIDE CONCRETE PAD FOR EACH CONDENSER. CONTRACTOR TO GRADE EACH PAD TO A LEVEL ELEVATION.
5. PROVIDE NOMINAL 8" SLEEVE UNDER STAIRS AND THROUGH INSIDE WALL AS A ROUTE FOR THE CONDENSER TUBING/WIRING SETS SEE PROCESS DWGS FOR SLEEVE DETAILS.
6. SEE DRAWING M-12-01 FOR FW PIPING INTERFACE.
7. FULL SIZE SANITARY TEE WITH BLIND FLANGE FOR CONNECTION OF FUTURE PUMPED WASTE STREAM.
8. HOSE BIBB.
9. 3/4" PIPE UP TO 2ND FLOOR HOSE BIBB.
10. SEE DWG M-12-07 FOR ADDITIONAL PIPING DETAILS.

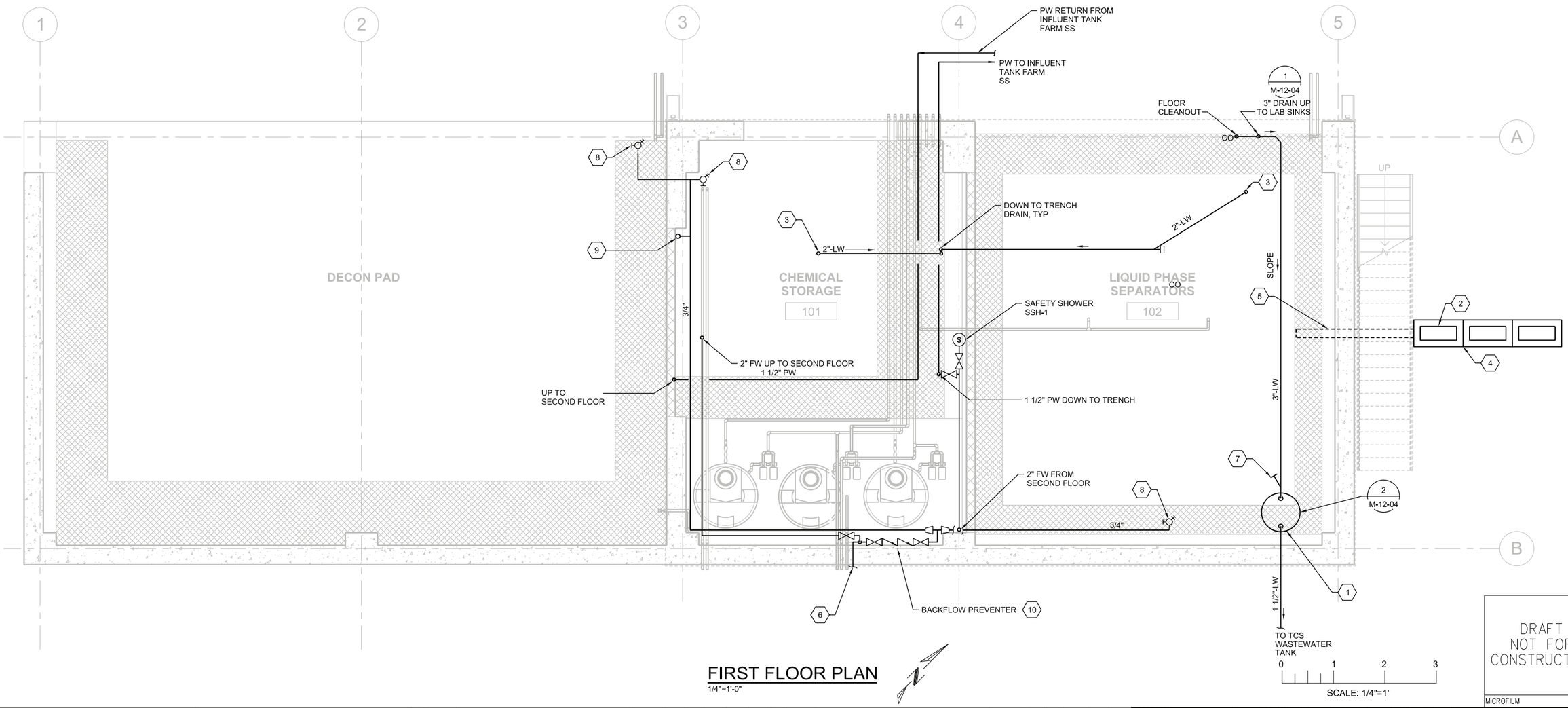

FIRST FLOOR PLAN

1/4"=1'-0"

DRAFT NOT FOR CONSTRUCTION

CH2MHILL®

NO.	DATE	DESCRIPTION	GM/SPEC	DWN	CHKD	SUPV	APVD BY
2	9/08/14	PRE-FINAL 90% DESIGN		AWM			JSQ
1	9/12/12	INTERMEDIATE 60% DESIGN		YMF			JP
0	11/18/11	PRELIMINARY 30% DESIGN		YMF			JP

REVISIONS

APPROVED BY: SO; SUPV; DSGN JQ; DWN YF; CHKD BB; OK JP; DATE 9/08/14; SCALES

TOPOCK GROUNDWATER REMEDIATION PROJECT
REMEDY-PRODUCED WATER CONDITIONING PLANT
HVAC & PLUMBING 1ST FLOOR PLAN
GAS TRANSMISSION & DISTRIBUTION
PACIFIC GAS AND ELECTRIC COMPANY
SAN FRANCISCO, CALIFORNIA

MICROFILM; BILL OF MATL; DWG LIST; SUPSDS; SUPSD BY; SHEET NO. M-12-05 of SHEETS; REV 1

FILENAME: CH-M-XXX-1205MD.DGN

PLOT DATE: 2014/08/18 PLOT TIME: 1:30:58 PM

FILENAME: ____DGN __-__-04 ___

N1808

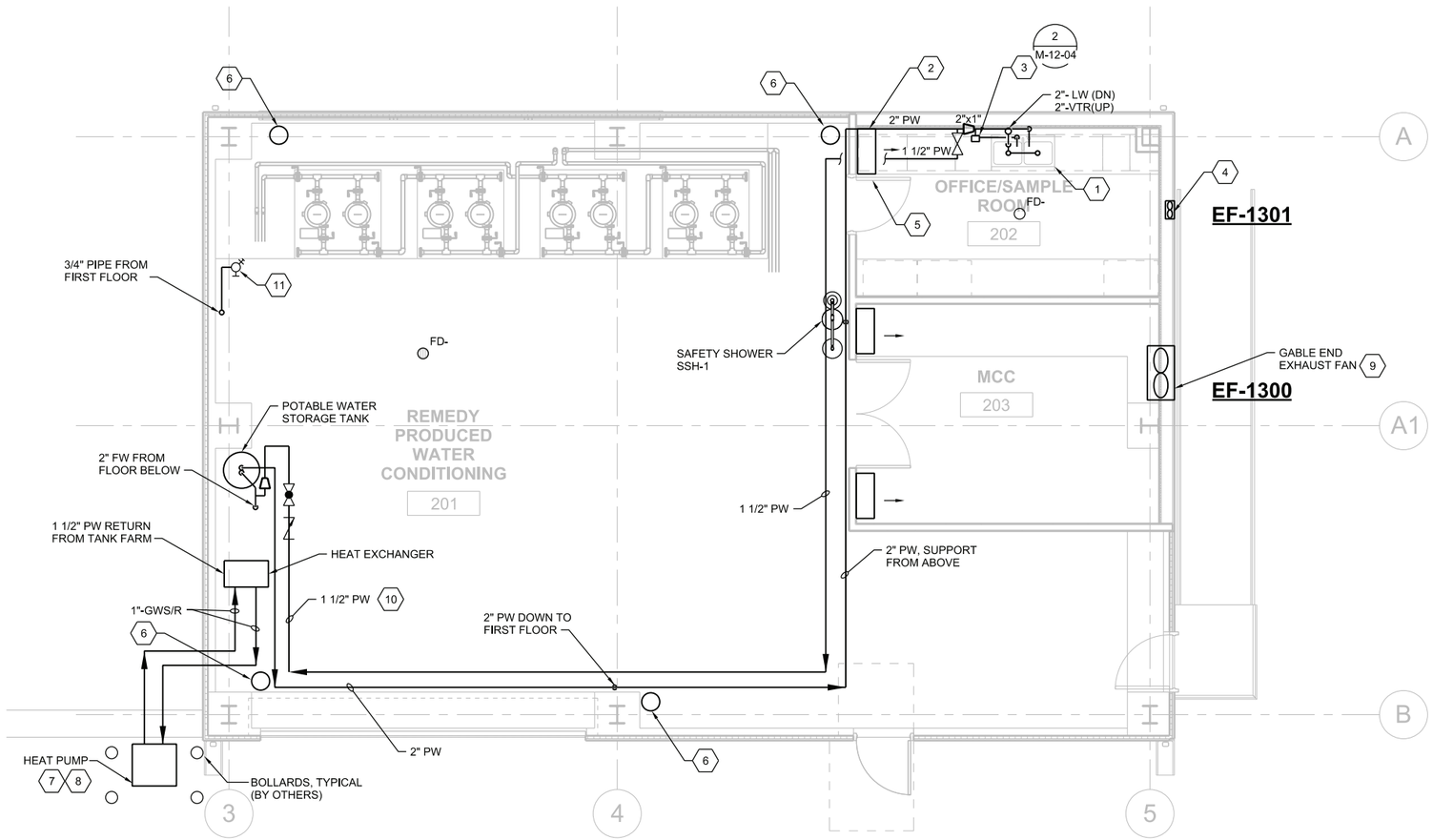

SHEET KEYNOTES

1. TYPE S-1 304 STAINLESS STEEL, DOUBLE COMPARTMENT LAB SINK, W/FIXTURES NOTED IN SPEC 22 40 00.
2. WALL MOUNTED DUCTLESS MINI-SPLIT AIR CONDITIONER (TYPICAL 3 PLACES).
3. INSTANTANEOUS WATER HEATER BELOW COUNTER
4. 50 CFM WALL MOUNTED VENTILATION FAN TO OUTSIDE. WIRE INTO LIGHTING CONTROLS.MOUNT APPROX 1 FOOT BELOW CEILING.
5. PROVIDE 1" UNDERCUT AT DOOR FOR FRESH AIR ENTRY.
6. PROVIDE 12" Ø DUCT THROUGH FLOOR AT EACH CORNER OF ROOM. SEE DETAIL 3 ON SHEET M-12-04. COORDINATE WITH STRUCTURAL DWGS AND OWNER FOR FINAL LOCATION BEFORE POURING FLOOR.
7. CONTRACTOR TO PROVIDE CONCRETE PAD FOR HEAT PUMP CHILLER AT GRADE. GRADE AS NECESSARY FOR LEVEL ELEVATION.
8. RUN 1" COPPER PIPING FOR SUPPLY/RETURN LINES BETWEEN HEAT PUMP AND HEAT EXCHANGER, SEE M-12-07.
9. EXHAUST FAN TO BE LOCATED IN GABLE END ABOVE THE MCC ROOM CEILING, THE OVER HEAD CRANE RAILS AND CRANE ASSEMBLY SEE ARCH DWGS FOR INSTALLATION LOCATION.
10. POTABLE TEMPERED WATER RECIRCULATION LINE RETURN PIPE.
11. HOSE BIBB.
12. SUPPORT ALL PIPING PER SUPPORT SPEC 40 05 15.

SECOND FLOOR PLAN

1/4"=1'-0"

0 1 2 3

SCALE: 1/4"=1'

DRAFT
NOT FOR
CONSTRUCTION

CH2MHILL®

NO.	DATE	DESCRIPTION	GM/SPEC	DWN	CHKD	SUPV	APVD BY
0	11/2011	PRELIMINARY (30%) DESIGN		YMF	WF	JP	CH
1	09/2012	INTERMEDIATE (60%) DESIGN		YMF	WF	JP	CH
2	09/2014	PRE-FINAL (90%) DESIGN		AWM	WF	JSQ	CH

REVISIONS

APPROVED BY
SO
SUPV
DSGN JQ
DWN YF
CHKD BB
OK JP
DATE 9/08/14
SCALES

TOPOCK GROUNDWATER REMEDIATION PROJECT
REMEDY-PRODUCED WATER
WATER CONDITIONING PLANT
HVAC & PLUMBING 2ND FLOOR PLAN
GAS TRANSMISSION & DISTRIBUTION
PACIFIC GAS AND ELECTRIC COMPANY
SAN FRANCISCO, CALIFORNIA

MICROFILM
BILL OF MATL
DWG LIST
SUPSDS
SUPSD BY
SHEET NO. M-12-06 of SHEETS
REV 1

FILENAME: CH-M-XXX-1206MD.DGN
PLOT DATE: 2014/09/04 PLOT TIME: 10:35:47 AM

N1808

FILENAME: ____DGN __-__-04 ____

NOTES:

1. INSTALL A DIGITAL CONTROL SWITCH EQUIVALENT (LOVE SERIES TS). SWITCH SHALL BE CAPABLE OF CONTROLLING THE HEAT PUMP IN COOLING OR HEATING MODE. INSTALL A SUITABLE SENSOR BULB (INCLUDED WITH LOVE CONTROLLER) IN PORTABLE WATER CIRCULATING LOOP. FIELD FIT AS NECESSARY.
2. HEAT PUMP SHALL MAINTAIN THE WATER AT 75º F PLUS OR MINUS 10º F. UPON A CALL FOR HEATING OR COOLING, THE HEAT PUMP REVERSING VALVE SHALL SWITCH AS REQUIRED AND THE CIRCULATION PUMP AND CHILLER SHALL START. MINIMUM RUN TIME SHALL BE SET AT 20 MINUTES.
3. EQUIPMENT:
   - A. HEAT PUMP: MULTI-AQUA MACH 060-1 — CH-1300
   - B. HEAT EXCHANGER: BELL & GOSSETT PLATE TYPE BPX 415-60 — HX-1300
   - C. CIRCULATION PUMP: BELL & GOSSETT BOOSTER PL-55 (2/5 HP) — P-1301
   - D. CONTROLLER: LOVE SERIES TS WITH PROBE — TIC-1300
   - E. INSTANTANEOUS WATER HEATER
   - F. POTABLE WATER STORAGE TANK
4. GW SERVICE IS A MIXTURE OF 40% GLYCOL AND WATER.
5. PROVIDE REDUCERS AS REQUIRED TO MATCH FITTINGS ON CH-1300.
6. INSTALL SHOCK ARRESTORS AT EACH SAFETY SHOWER.
7. INSTANTANEOUS WATER HEATER WH-02.
8. LOCATE BFD ASSEMBLY W/ 3 FEET OF CLEARANCE IN FRONT FOR MAINTENANCE ACCESS.
9. BELL & GOSSETT CIRCUIT SETTER MODEL CB-1 1/2"-117104. SET FLOW AT 5 GPM.

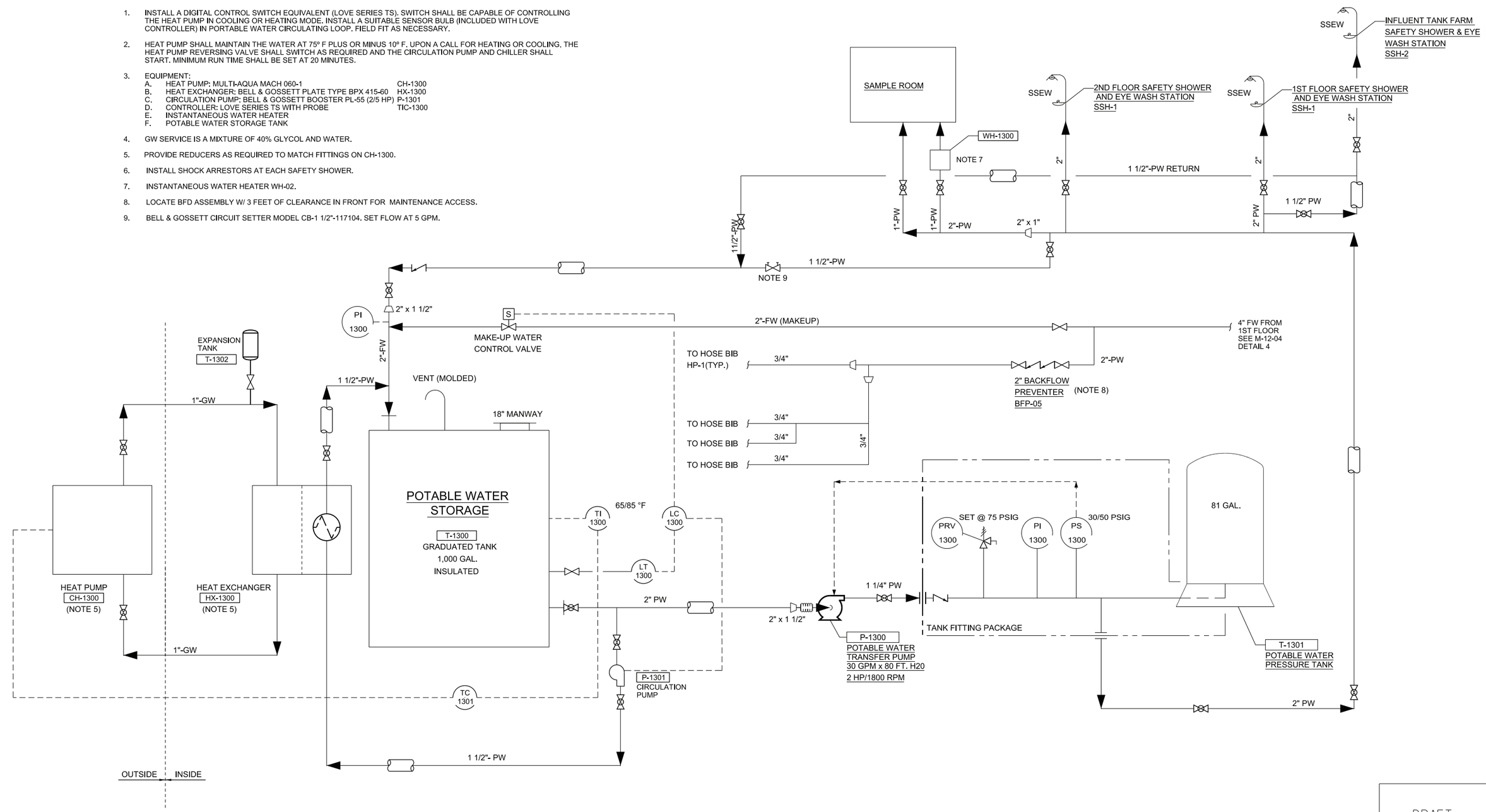

DRAFT
NOT FOR
CONSTRUCTION

CH2MHILL®

NO.	DATE	DESCRIPTION	GM/SPEC	DWN	CHKD	SUPV	APVD BY
0	11/2011	PRELIMINARY (30%) DESIGN		YMF	WF	JSQ	CH
1	09/2012	INTERMEDIATE (60%) DESIGN		YMF	WF	JP	CH
2	09/2014	PRE-FINAL (90%) DESIGN		AWM	WF	JP	CH

REVISIONS

APPROVED BY: SO; SUPV; DSGN JQ; DWN YF; CHKD BB; OK JP; DATE 9/08/14; SCALES

TOPOCK GROUNDWATER REMEDIATION PROJECT
REMEDY-PRODUCED WATER CONDITIONING PLANT
POTABLE WATER
GAS TRANSMISSION & DISTRIBUTION
PACIFIC GAS AND ELECTRIC COMPANY
SAN FRANCISCO, CALIFORNIA

MICROFILM
BILL OF MATL
DWG LIST
SUPSDS
SUPSD BY
SHEET NO. of SHEETS
M-12-07
REV 1

FILENAME: CH-M-XXX-1207MD.DGN
PLOT DATE: 2014/09/04 PLOT TIME: 11:05:09 AM
FILENAME: ____.DGN __-__-04 ____

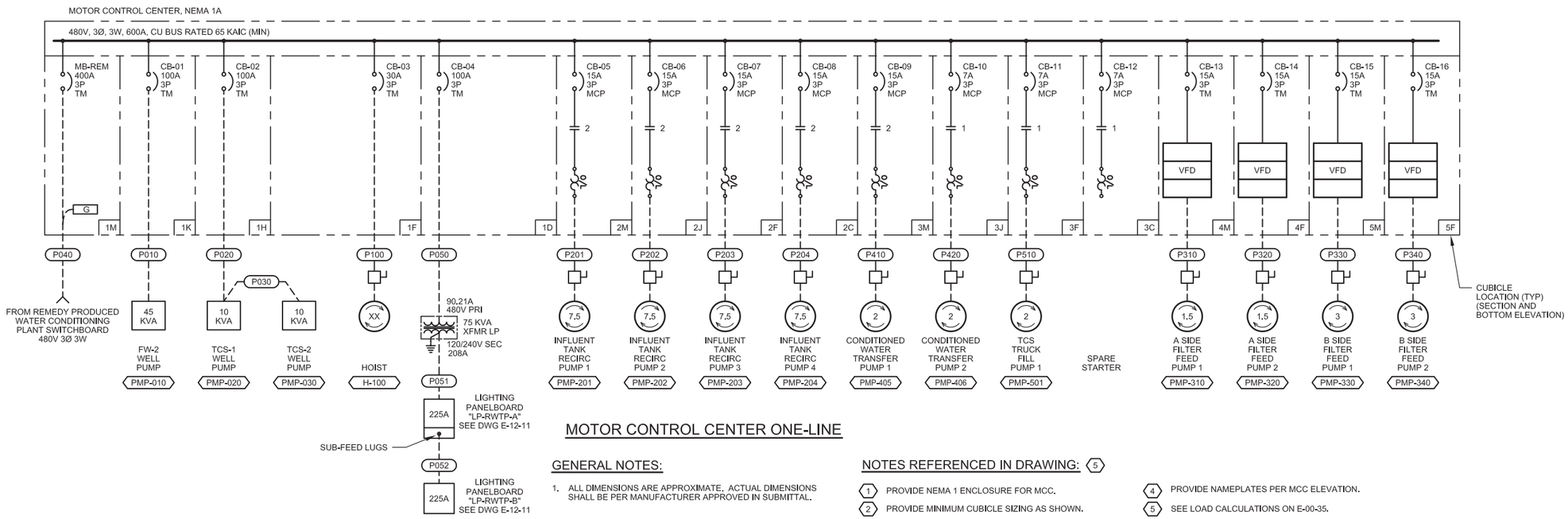

MOTOR CONTROL CENTER ONE-LINE

GENERAL NOTES:

1. ALL DIMENSIONS ARE APPROXIMATE. ACTUAL DIMENSIONS SHALL BE PER MANUFACTURER APPROVED IN SUBMITTAL.

NOTES REFERENCED IN DRAWING: (5)

(1) PROVIDE NEMA 1 ENCLOSURE FOR MCC.

(2) PROVIDE MINIMUM CUBICLE SIZING AS SHOWN.

(3) PROVIDE 12" BREAKER OPERATING CHAIN FOR BREAKERS LOCATED AT THE TOP OF EACH SECTION.

(4) PROVIDE NAMEPLATES PER MCC ELEVATION.

(5) SEE LOAD CALCULATIONS ON E-00-35.

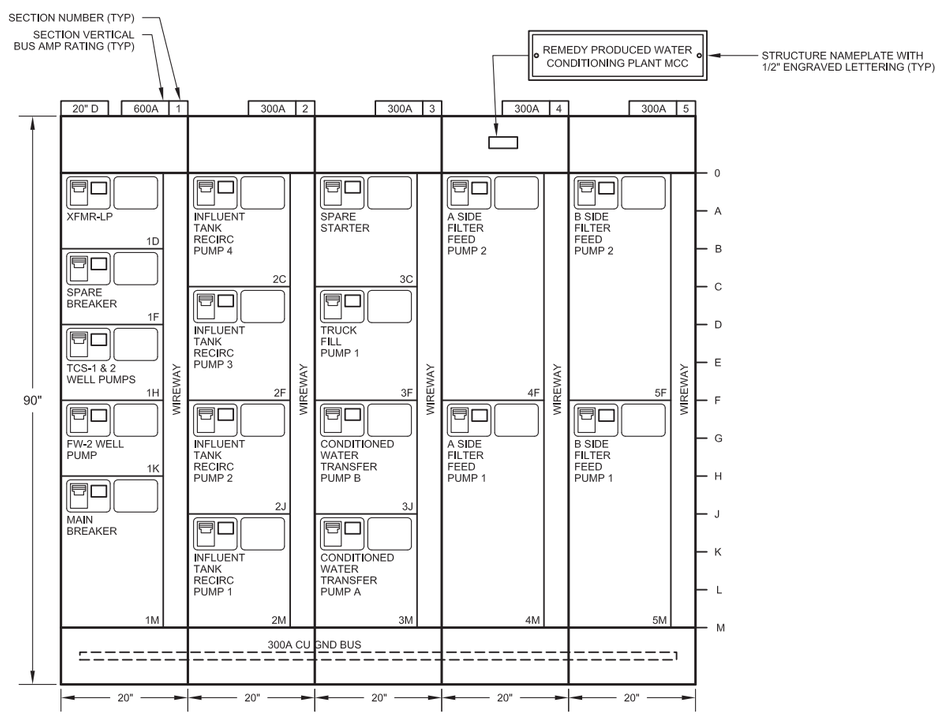

MCC ELEVATION

DRAFT
NOT FOR
CONSTRUCTION

FRISCH ENGINEERING, INC.
CONSULTING ELECTRICAL ENGINEERS
13405 FOLSOM BLVD, UNIT 600
FOLSOM, CA 95630
PH 916 353 1025
WWW.FRISCHENGINEERING.COM

CH2MHILL®

NO.	DATE	DESCRIPTION	GM/SPEC	DWN	CHKD	SUPV	APVD BY
1	9/8/14	PRE-FINAL (90%) DESIGN		MBY			TPF
0	4/5/13	INTERMEDIATE (60%) DESIGN		MBY			TPF

REVISIONS

APPROVED BY: TPF
SO
SUPV TPF
DSGN MBY
DWN MBY, NC
CHKD MF
OK TPF
DATE
SCALES N/A

TOPOCK GROUNDWATER REMEDIATION PROJECT
REMEDY PRODUCED WATER CONDITIONING PLANT MCC ONE-LINE & ELEVATION
GAS TRANSMISSION & DISTRIBUTION
PACIFIC GAS AND ELECTRIC COMPANY
SAN FRANCISCO, CALIFORNIA

MICROFILM
BILL OF MATL
DWG LIST
SUPSDS
SUPSD BY
SHEET NO. E-12-01 of SHEETS
REV 1

FILENAME: FE-E-xxx-1201AD.dwg
PLOT DATE: Aug 25, 2014 PLOT TIME: 3:24:04pm

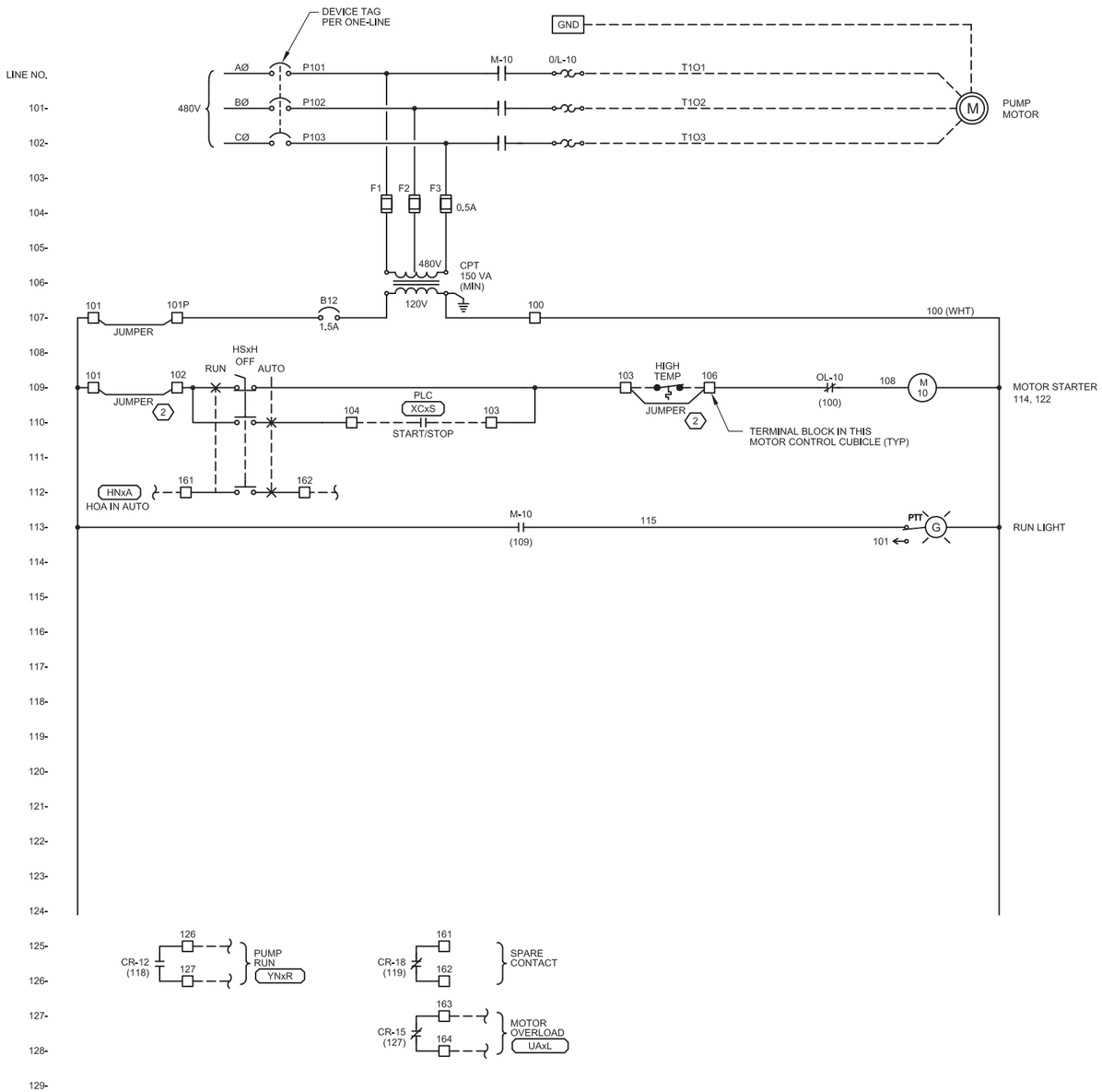

FVNR CENTRIFUGAL MOTOR ELEMENTARY DIAGRAM

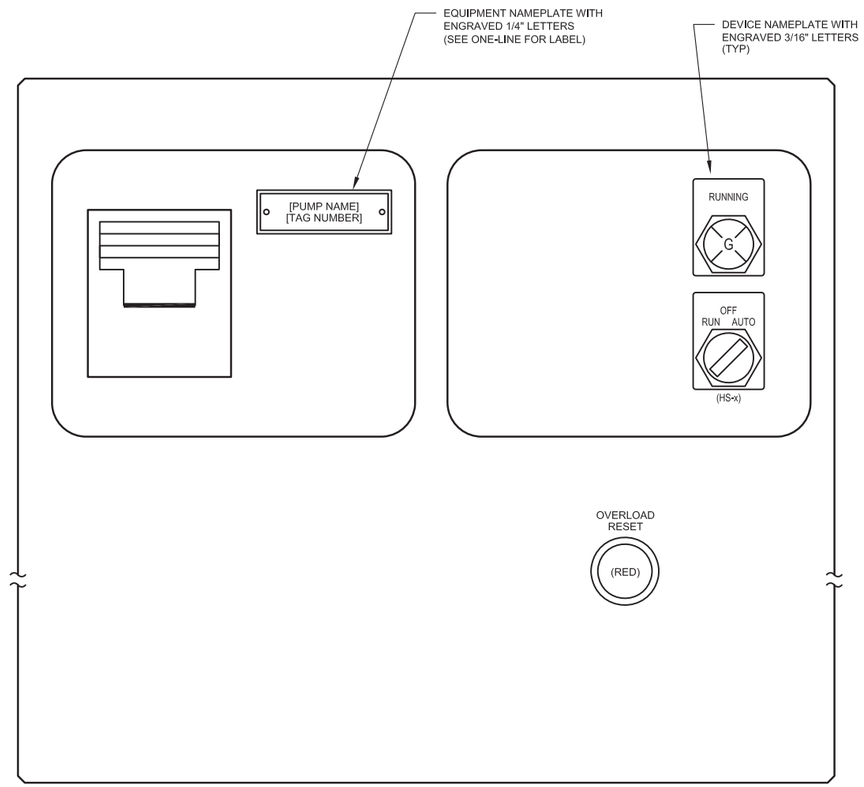

CUBICLE DOOR LAYOUT

NOTES REFERENCED IN DRAWING:

1. SET TIME DELAY ON DROP TO 0.5 SECONDS.
2. REMOVE JUMPER FOR DEVICE WHEN CONNECTED.

GENERAL NOTES:

1. SIMILAR DIAGRAM FOR PUMPS LISTED AND PER P&IDS.
2. TERMINAL BLOCKS AND WIRES SHALL BE LABELED SAME EXCEPTION: WIRES TO PLC SHALL BE NUMBERED PER CONTROL PANEL TERMINAL BLOCK NUMBER.

DRAFT NOT FOR CONSTRUCTION

FRISCH ENGINEERING, INC.
CONSULTING ELECTRICAL ENGINEERS
13405 FOLSOM BLVD, UNIT 600
FOLSOM, CA 95630
PH 916 353 1025
WWW.FRISCHENGINEERING.COM

CH2MHILL®

NO.	DATE	DESCRIPTION	GM/SPEC	DWN	CHKD	SUPV	APVD BY
1	9/8/14	PRE-FINAL (90%) DESIGN		MBY			TPF
0	4/5/13	INTERMEDIATE (60%) DESIGN		MBY			TPF

REVISIONS

APPROVED BY: TPF

SO	
SUPV	TPF
DSGN	MBY
DWN	MBY, NC
CHKD	MF
OK	TPF
DATE	
SCALES	N/A

TOPOCK GROUNDWATER REMEDIATION PROJECT
REMEDY PRODUCED WATER CONDITIONING PLANT
FVNR ELEMENTARY DIAGRAM
GAS TRANSMISSION & DISTRIBUTION
PACIFIC GAS AND ELECTRIC COMPANY
SAN FRANCISCO, CALIFORNIA

MICROFILM
BILL OF MATL
DWG LIST
SUPSDS
SUPSD BY
SHEET NO. of SHEETS
E-12-02
REV 1

PLOT DATE: Aug 25, 2014 PLOT TIME: 3:24:10pm
FILENAME: FE-E-xxx-1202AD.dwg

N1808

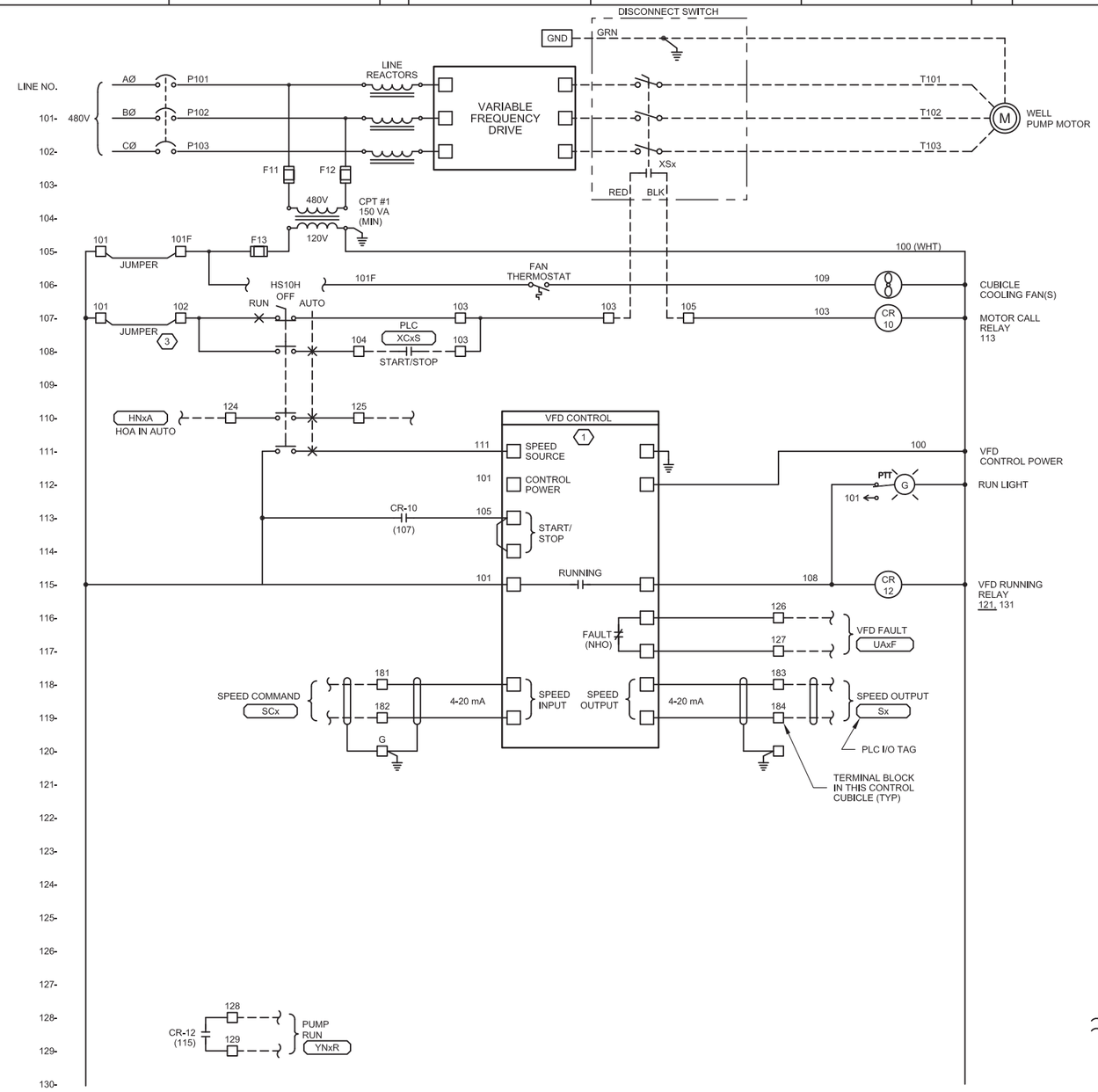

VFD ELEMENTARY DIAGRAM

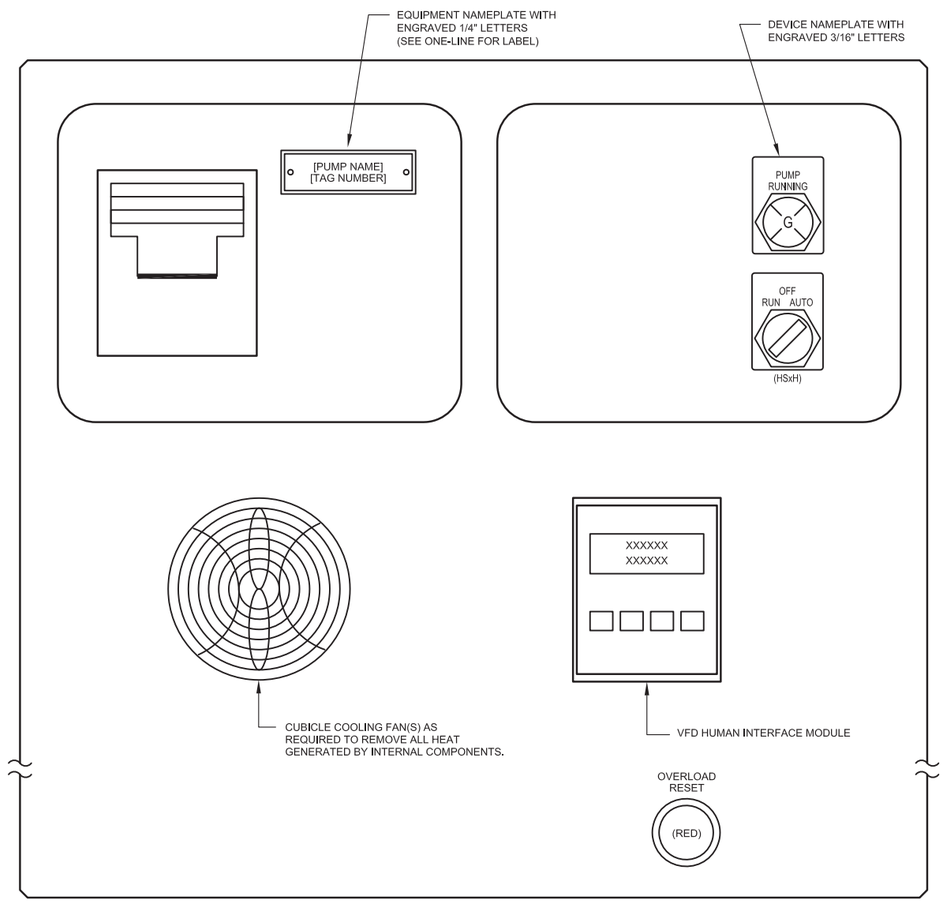

DOOR LAYOUT

NOT TO SCALE

NOTES REFERENCED IN DRAWING:

1. PROVIDE VFD WITH 120 VAC CONTROL CIRCUIT INTERFACE AND ELECTRONIC OVERLOAD PROTECTION.
2. REMOVE JUMPER FOR DEVICE WHEN CONNECTED.

GENERAL NOTES:

1. TERMINAL BLOCKS AND WIRES SHALL BE LABELED SAME EXCEPTION: WIRES TO PLC SHALL BE NUMBERED PER CONTROL PANEL TERMINAL BLOCK NUMBER.
2. SIMILAR DIAGRAM FOR ALL VFD MOTORS AS SHOWN IN ONE-LINE DIAGRAM

DRAFT
NOT FOR
CONSTRUCTION

FRISCH ENGINEERING, INC.
CONSULTING ELECTRICAL ENGINEERS
13405 FOLSOM BLVD, UNIT 600
FOLSOM, CA 95630
PH 916 353 1025
WWW.FRISCHENGINEERING.COM

CH2MHILL®

NO.	DATE	DESCRIPTION	GM/SPEC	DWN	CHKD	SUPV	APVD BY
1	9/8/14	PRE-FINAL (90%) DESIGN		MBY			TPF
0	4/5/13	INTERMEDIATE (60%) DESIGN		MBY			TPF

REVISIONS

APPROVED BY: TPF

SO	
SUPV	TPF
DSGN	MBY
DWN	MBY, NC
CHKD	MF
OK	TPF
DATE	
SCALES	N/A

TOPOCK GROUNDWATER REMEDIATION PROJECT
REMEDY PRODUCED WATER CONDITIONING PLANT
VFD ELEMENTARY DIAGRAM
GAS TRANSMISSION & DISTRIBUTION
PACIFIC GAS AND ELECTRIC COMPANY
SAN FRANCISCO, CALIFORNIA

MICROFILM	
BILL OF MATL	
DWG LIST	
SUPSDS	
SUPSD BY	
SHEET NO. of SHEETS	
E-12-03	REV 1

PLOT TIME: 3:24:16pm
PLOT DATE: Aug 25, 2014
FILENAME: FE-E-xxx-1203AD.dwg

N1808

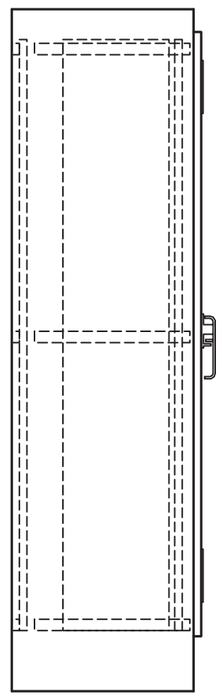

SIDE ELEVATION

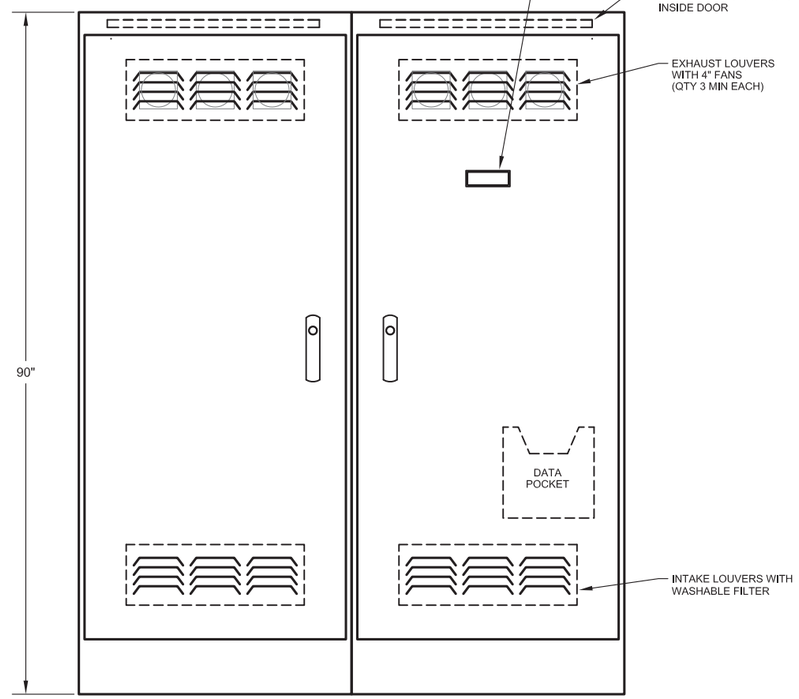

FRONT ELEVATION

ELEVATION

1" = 20"

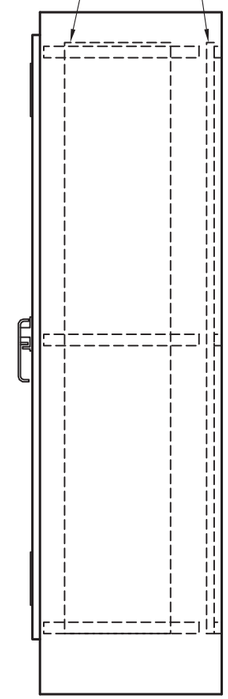

SIDE ELEVATION

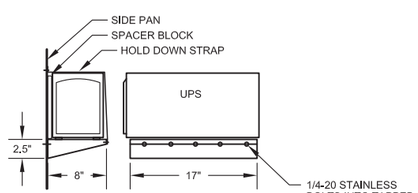

UPS SHELF DETAIL

1" = 10"

DETAIL NOTES:

1. DO NOT BLOCK VENTS WITH SPACER BLOCK. USE TWO.
2. FABRICATED FROM 14 GA (MIN) PAINTED GALVANEAL OR STAINLESS STEEL SOLID SIDES, TOP, BACK AND FRONT WITH CONTINUOUS WELDED SEAMS.

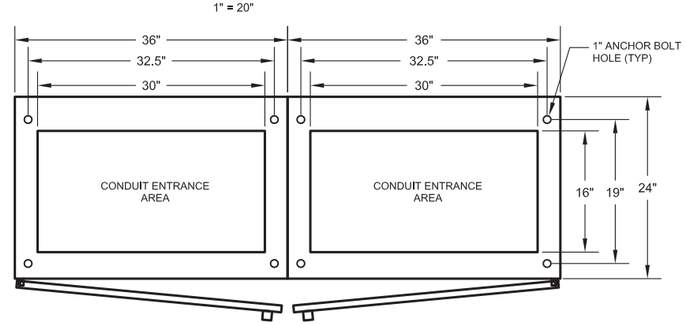

BASE PLAN

1" = 20"

PANEL FABRICATION METHODS

1. NEMA 12, OPEN BOTTOM.
2. OUTER DOOR SEALED WITH RUBBERIZED FOAM GASKET.
3. PANEL SHALL BE FABRICATED FROM PAINT BOND GALVANEAL SHEET STEEL.
4. 12 GAUGE EXTERIOR AND 14 GAUGE INTERIOR.
5. ALL SEAMS SHALL HAVE CONTINUOUS WELD GROUND SMOOTH.
6. DOOR TO BE PADLOCKABLE WITH HEAVY DUTY 3 POINT LATCH.
7. DOOR HINGES AND PINS SHALL BE CONTINUOUS, HEAVY DUTY.
8. NO SCREWS, RIVETS, OR BOLTS SHALL PROTRUDE EXTERNALLY.
9. INTERNAL SCREWS, RIVETS, BOLTS, AND NUTS SHALL BE MACHINE THREAD INTO TAPPED BACKPAN.
10. EXTERIOR PANEL COLOR: ANSI 61 GRAY.
11. MOUNTING PAN AND INTERIOR DOOR COLOR: WHITE.
12. FABRICATION AND WIRING SHALL CONFORM TO U.L. AND NEMA STANDARDS.
13. ALL WIRING SHALL BE PERMANENTLY LABELED WITH WIRE MARKERS ON BOTH ENDS.
14. WIRING DIAGRAMS SHALL BE PLACED IN A PLASTIC DRAWING HOLDER PERMANENTLY ATTACHED TO THE INSIDE OF THE FRONT DOOR.
15. AS - BUILT WIRING DIAGRAMS SHALL BE SHIPPED WITH EQUIPMENT.
16. UPS SHELF SHALL BE 14GA PAINTED STEEL BOLTED TO SIDEPAN.

DRAFT
NOT FOR
CONSTRUCTION

FRISCH ENGINEERING, INC.
CONSULTING ELECTRICAL ENGINEERS
13405 FOLSOM BLVD, UNIT 600
FOLSOM, CA 95630
PH 916 353 1025
WWW.FRISCHENGINEERING.COM

CH2MHILL®

NO.	DATE	DESCRIPTION	GM/SPEC	DWN	CHKD	SUPV	APVD BY
1	9/8/14	PRE-FINAL (90%) DESIGN		MBY			TPF
0	4/5/13	INTERMEDIATE (60%) DESIGN		MBY			TPF

REVISIONS

APPROVED BY: TPF

SO	
SUPV	TPF
DSGN	MBY
DWN	MBY, NC
CHKD	MF
OK	TPF
DATE	
SCALES	N/A

TOPOCK GROUNDWATER REMEDIATION PROJECT
REMEDY PRODUCED WATER CONDITIONING PLANT CONTROL PANEL ELEVATION
GAS TRANSMISSION & DISTRIBUTION
PACIFIC GAS AND ELECTRIC COMPANY
SAN FRANCISCO, CALIFORNIA

MICROFILM	
BILL OF MATL	
DWG LIST	
SUPSDS	
SUPSD BY	
SHEET NO. of SHEETS	
E-12-04	REV 1

PLOT DATE: Aug 25, 2014 PLOT TIME: 3:24:21pm

FILENAME: FE-xxx-1204AD.dwg

N1808

LAYOUT REFERENCED NOTES:

1. WIRE I/O TO TERMINAL BLOCK PER EXAMPLE I/O WIRING DIAGRAMS.

GENERAL NOTES:

1. REPRESENTATIVE OF MAJOR COMPONENTS ONLY. ACTUAL BACKPAN LAYOUT SHALL BE SIMILAR TO LAYOUT SHOWN. SUBMIT SCALED BACKPAN LAYOUT FOR REVIEW BY ENGINEER.
2. QUANTITY OF TERMINAL BLOCKS AND RELAYS SHALL BE AS DETERMINED BY P&IDS AND EXAMPLE I/O WIRING DIAGRAM, DWG E-11.

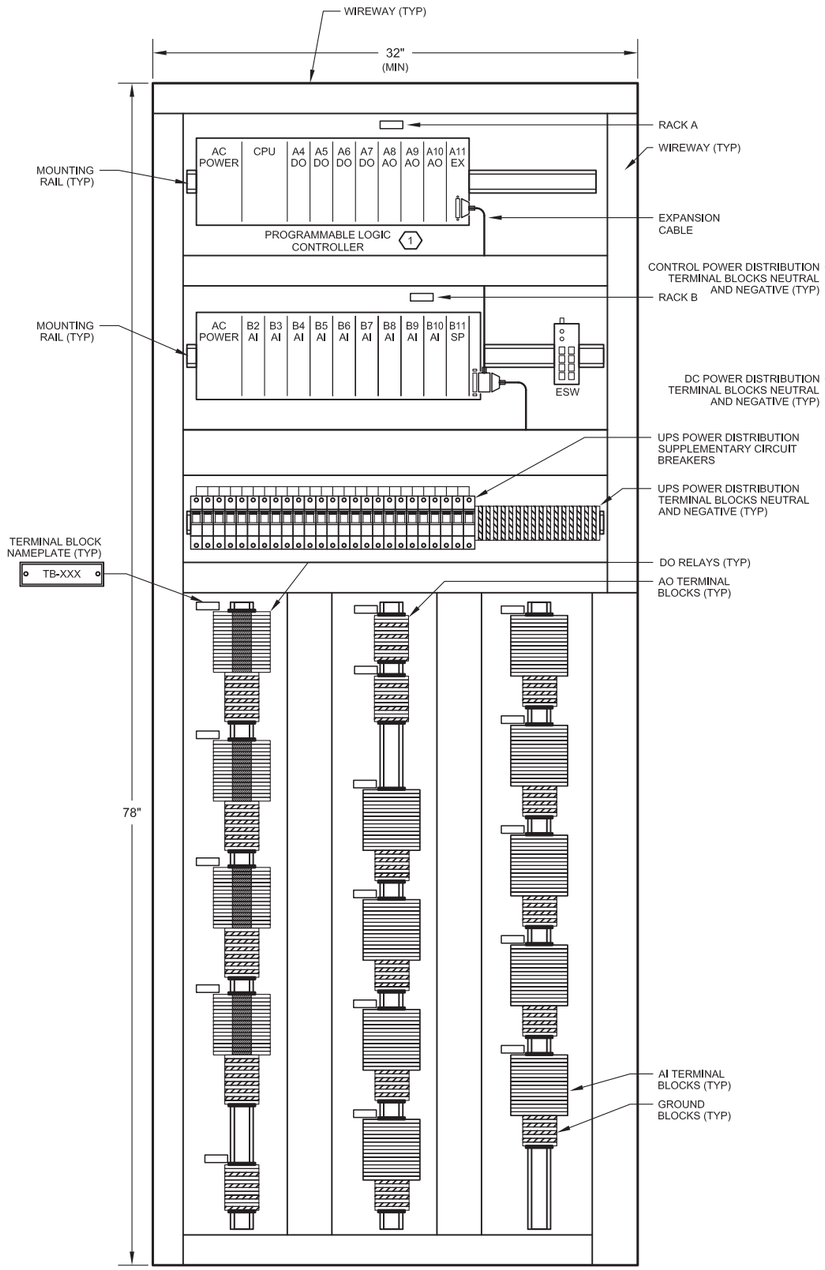

LEFT CENTER 1

BACKPAN LAYOUT

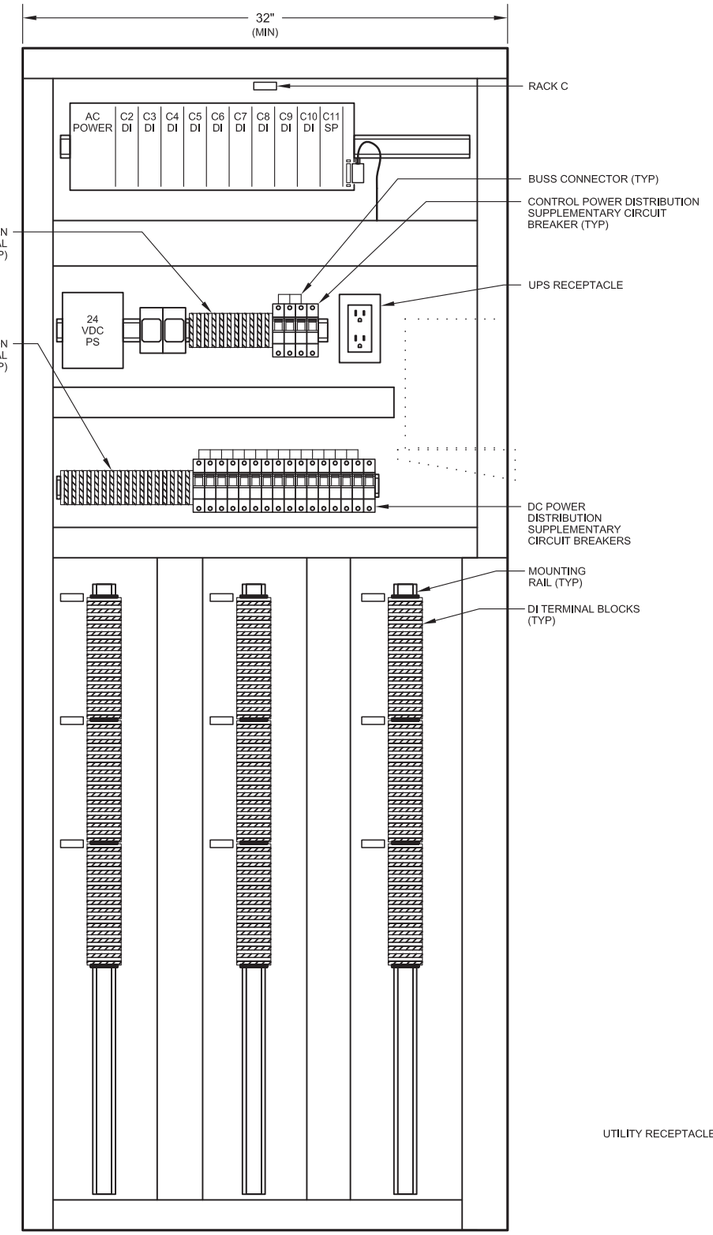

RIGHT CENTER 1

BACKPAN LAYOUT

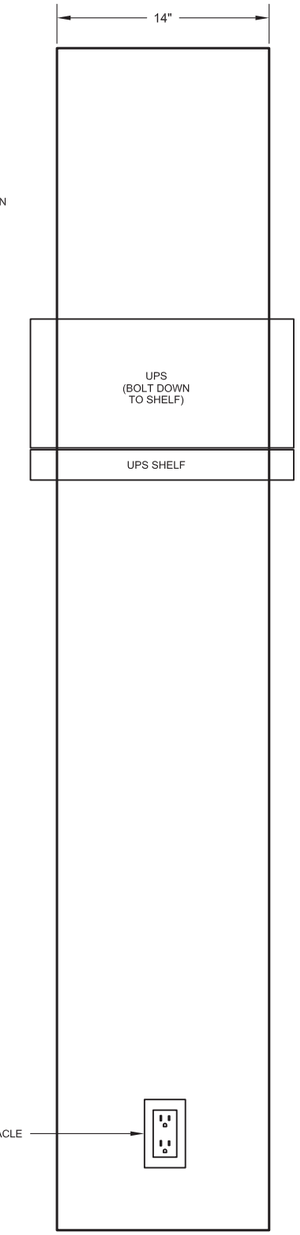

RIGHT

SIDEPAN LAYOUT

1" = 10"

DRAFT
NOT FOR
CONSTRUCTION

FRISCH ENGINEERING, INC.
CONSULTING ELECTRICAL ENGINEERS
13405 FOLSOM BLVD, UNIT 600
FOLSOM, CA 95630
PH 916 353 1025
WWW.FRISCHENGINEERING.COM

CH2MHILL®

NO.	DATE	DESCRIPTION	GM/SPEC	DWN	CHKD	SUPV	APVD BY
1	9/8/14	PRE-FINAL (90%) DESIGN		MBY			TPF
0	4/5/13	INTERMEDIATE (60%) DESIGN		MBY			TPF

REVISIONS

APPROVED BY: TPF
SO
SUPV TPF
DSGN MBY
DWN MBY, NC
CHKD MF
OK TPF
DATE
SCALES N/A

TOPOCK GROUNDWATER REMEDIATION PROJECT
REMEDY PRODUCED WATER CONDITIONING PLANT
CONTROL PANEL BACKPAN LAYOUT
GAS TRANSMISSION & DISTRIBUTION
PACIFIC GAS AND ELECTRIC COMPANY
SAN FRANCISCO, CALIFORNIA

MICROFILM
BILL OF MATL
DWG LIST
SUPSDS
SUPSD BY
SHEET NO. E-12-05 of SHEETS
REV 1

FILENAME: FE-E-xxx-1205AD.dwg
PLOT DATE: Aug 25, 2014 PLOT TIME: 3:24:28pm

N1808

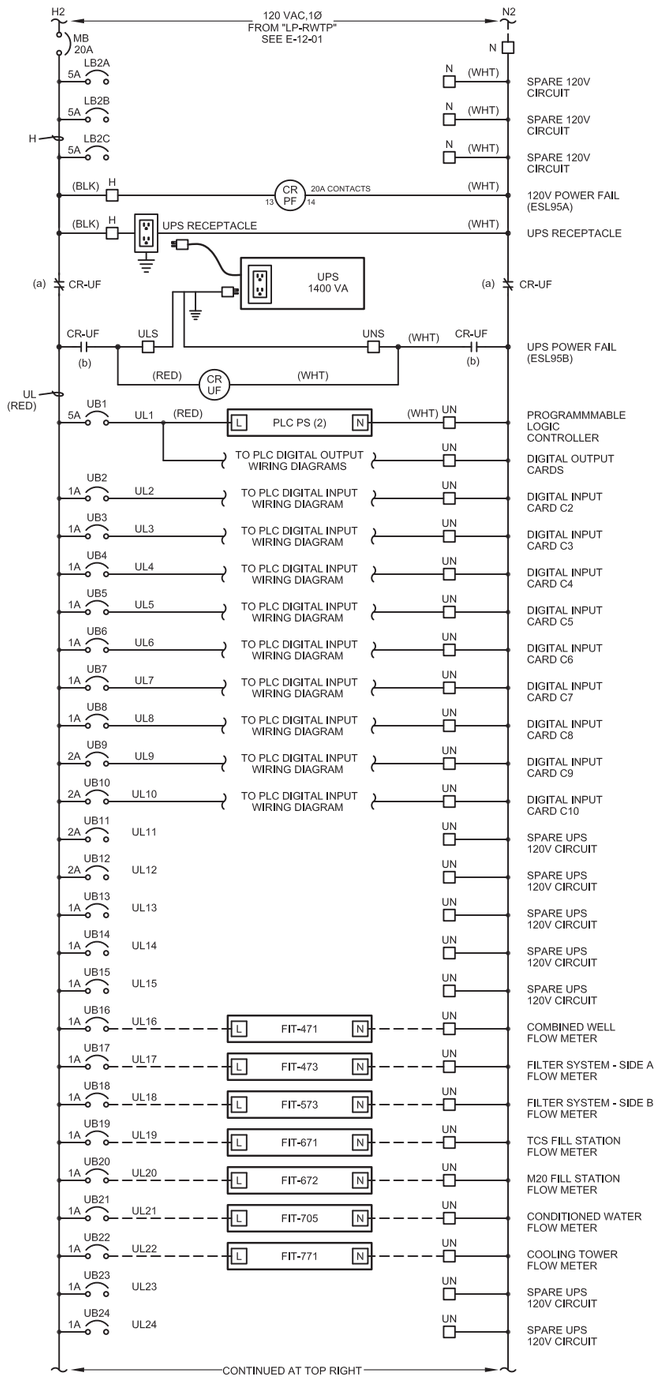

POWER DISTRIBUTION DIAGRAM

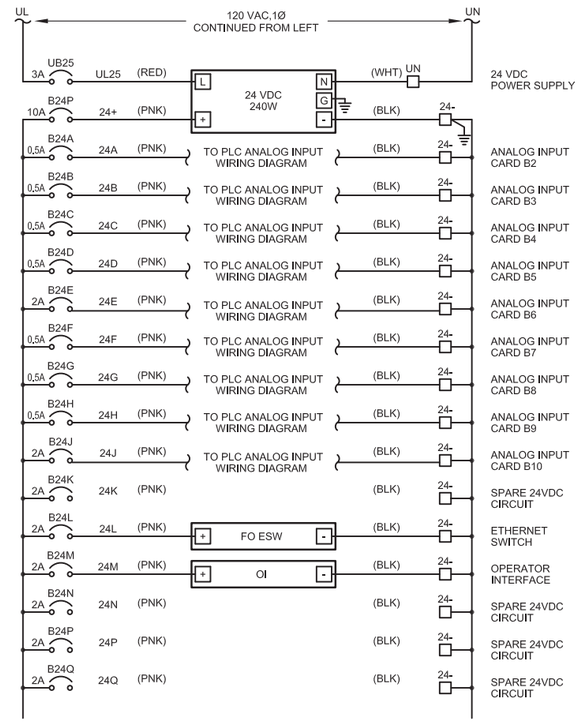

POWER DISTRIBUTION DIAGRAM - CONTINUED

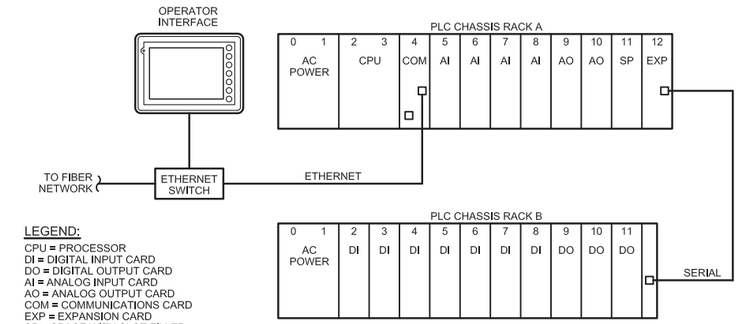

LEGEND:

CPU = PROCESSOR
DI = DIGITAL INPUT CARD
DO = DIGITAL OUTPUT CARD
AI = ANALOG INPUT CARD
AO = ANALOG OUTPUT CARD
COM = COMMUNICATIONS CARD
EXP = EXPANSION CARD
SP = SPACE WITH SLOT FILLER

PLC BLOCK DIAGRAM

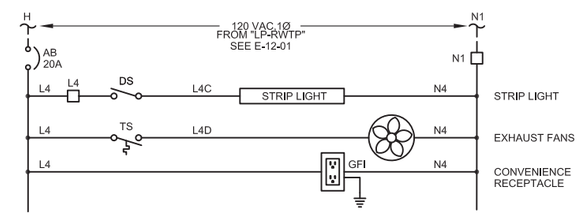

AUXILLIARY POWER DIAGRAM

DRAFT
NOT FOR
CONSTRUCTION

FRISCH ENGINEERING, INC.
CONSULTING ELECTRICAL ENGINEERS
13405 FOLSOM BLVD, UNIT 600
FOLSOM, CA 95630
PH 916 353 1025
WWW.FRISCHENGINEERING.COM

CH2MHILL®

NO.	DATE	DESCRIPTION	GM/SPEC	DWN	CHKD	SUPV	APVD BY
1	9/8/14	PRE-FINAL (90%) DESIGN		MBY			TPF
0	4/5/13	INTERMEDIATE (60%) DESIGN		MBY			TPF

REVISIONS

APPROVED BY: TPF
SO
SUPV TPF
DSGN MBY
DWN MBY, NC
CHKD MF
OK TPF
DATE
SCALES N/A

TOPOCK GROUNDWATER REMEDIATION PROJECT
REMEDY PRODUCED WATER CONDITIONING PLANT
POWER DISTRIBUTION DIAGRAM
GAS TRANSMISSION & DISTRIBUTION
PACIFIC GAS AND ELECTRIC COMPANY
SAN FRANCISCO, CALIFORNIA

MICROFILM
BILL OF MATL
DWG LIST
SUPSDS
SUPSD BY
SHEET NO. E-12-06 of SHEETS
REV 1

FILENAME: FE-E-xxx-1206AD.dwg
PLOT DATE: Aug 25, 2014 PLOT TIME: 3:24:34pm

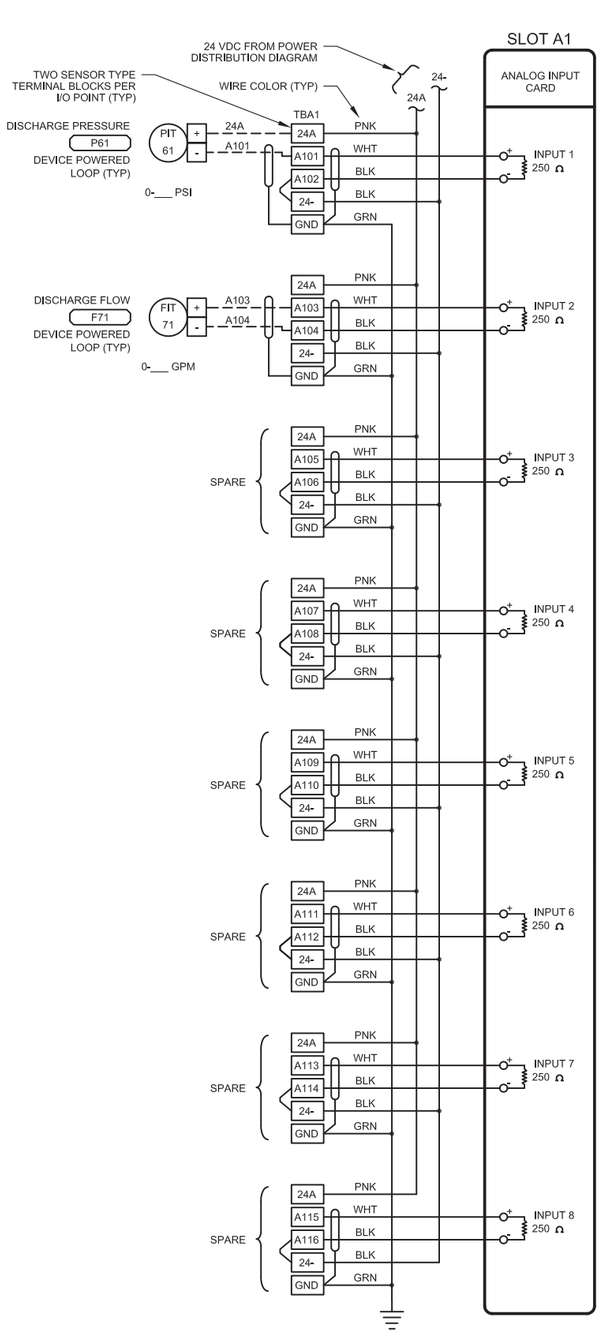

AI CARD

NOTES: 1. TWO CARDS PER DRAWING MAXIMUM.
2. USE MANUFACTURED TERMINAL BLOCK JUMPERS WHERE POSSIBLE

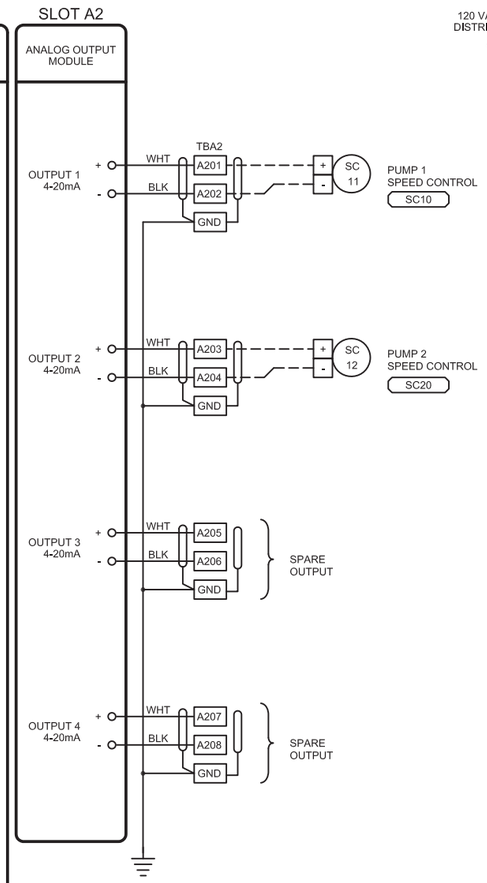

AO CARD

NOTES: 1. TWO CARDS PER DRAWING MAXIMUM.

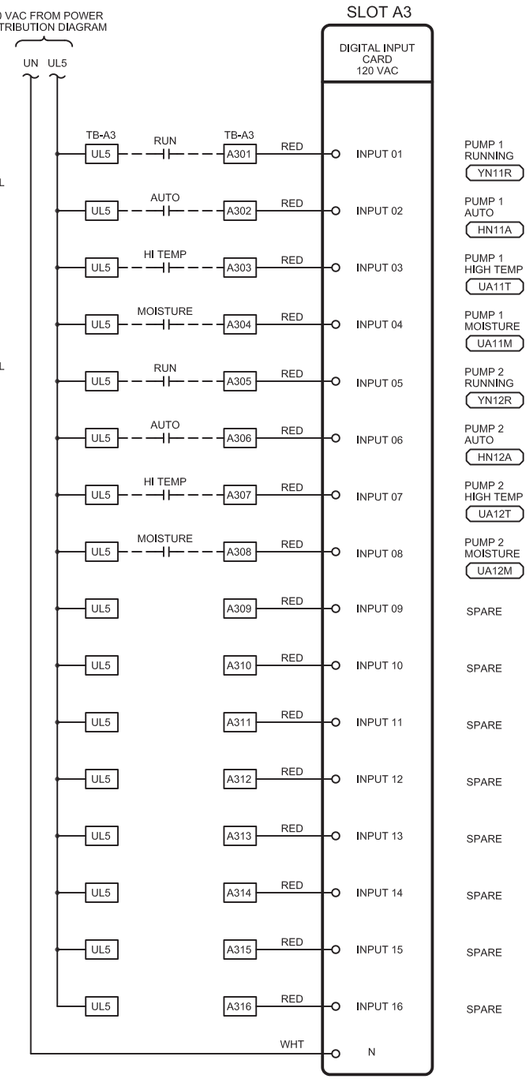

DI CARD

NOTES: 1. TWO CARDS PER DRAWING MAXIMUM.

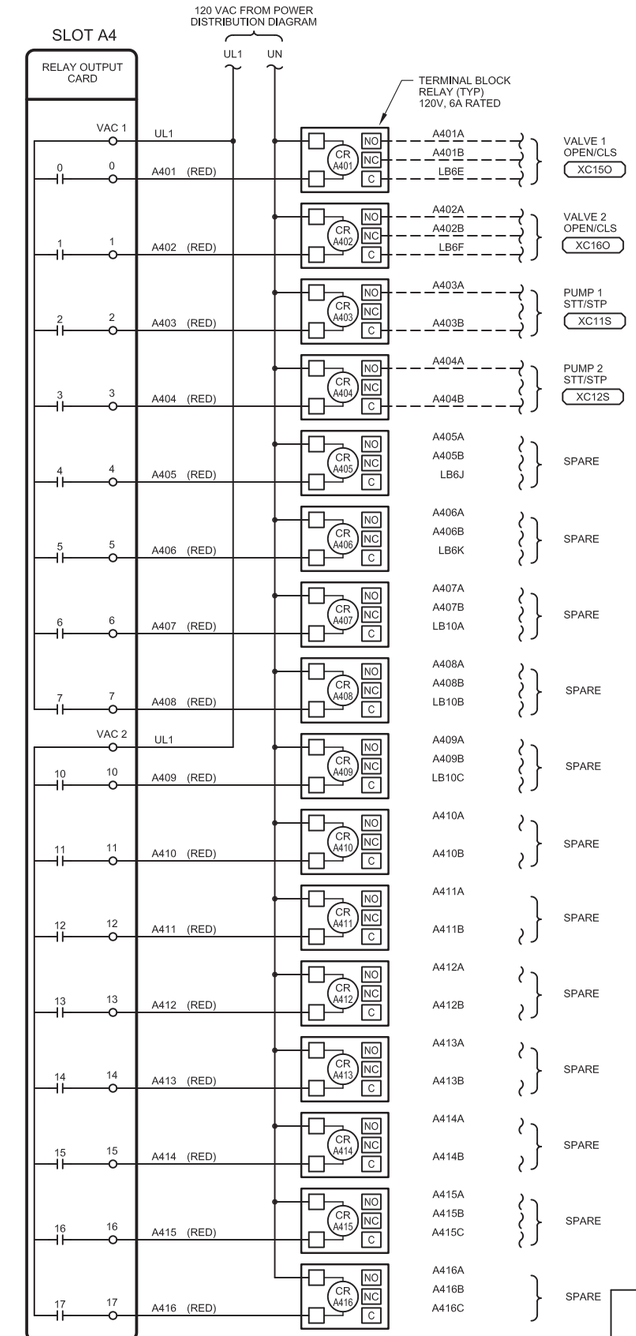

DO CARD

NOTES: 1. TWO CARDS PER DRAWING MAXIMUM.

EXAMPLE PLC I/O WIRING DIAGRAMS

NOTES:
1. WIRE SPARE I/O POINTS TO TERMINAL BLOCKS.
2. EXAMPLE I/O POINTS SHOWN. THIS DRAWING INTENDED TO SHOW I/O WIRING ONLY.
3. I/O TYPE AND NUMBER OF POINTS AND CARDS REQUIRED IS DETERMINED BY P&ID DRAWINGS.
4. MINIMUM 20% SPARE I/O POINTS PER I/O TYPE.
5. PLC I/O CARD WIRE NUMBERS SHALL BE BUILT AS SHOWN IN EXAMPLE BELOW. FIELD WIRES SHALL HAVE SAME NUMBER AS TERMINAL NUMBER.

A101 — RACK LETTER, SLOT NUMBER, INPUT NUMBER

DRAFT NOT FOR CONSTRUCTION

FRISCH ENGINEERING, INC.
CONSULTING ELECTRICAL ENGINEERS
13405 FOLSOM BLVD, UNIT 600
FOLSOM, CA 95630
PH 916 353 1025
WWW.FRISCHENGINEERING.COM

CH2MHILL®

NO.	DATE	DESCRIPTION	GM/SPEC	DWN	CHKD	SUPV	APVD BY
1	9/8/14	PRE-FINAL (90%) DESIGN		MBY			TPF
0	4/5/13	INTERMEDIATE (60%) DESIGN		MBY			TPF

REVISIONS

APPROVED BY: TPF
SO
SUPV TPF
DSGN MBY
DWN MBY, NC
CHKD MF
OK TPF
DATE
SCALES N/A

TOPOCK GROUNDWATER REMEDIATION PROJECT
REMEDY PRODUCED WATER CONDITIONING PLANT
EXAMPLE PLC I/O WIRING DIAGRAMS
GAS TRANSMISSION & DISTRIBUTION
PACIFIC GAS AND ELECTRIC COMPANY
SAN FRANCISCO, CALIFORNIA

MICROFILM
BILL OF MATL
DWG LIST
SUPSDS
SUPSD BY
SHEET NO. E-12-07 of SHEETS
REV 1

FILENAME: FE-E-xxx-1207AD.dwg
PLOT DATE: Aug 25, 2014
PLOT TIME: 3:24:42pm

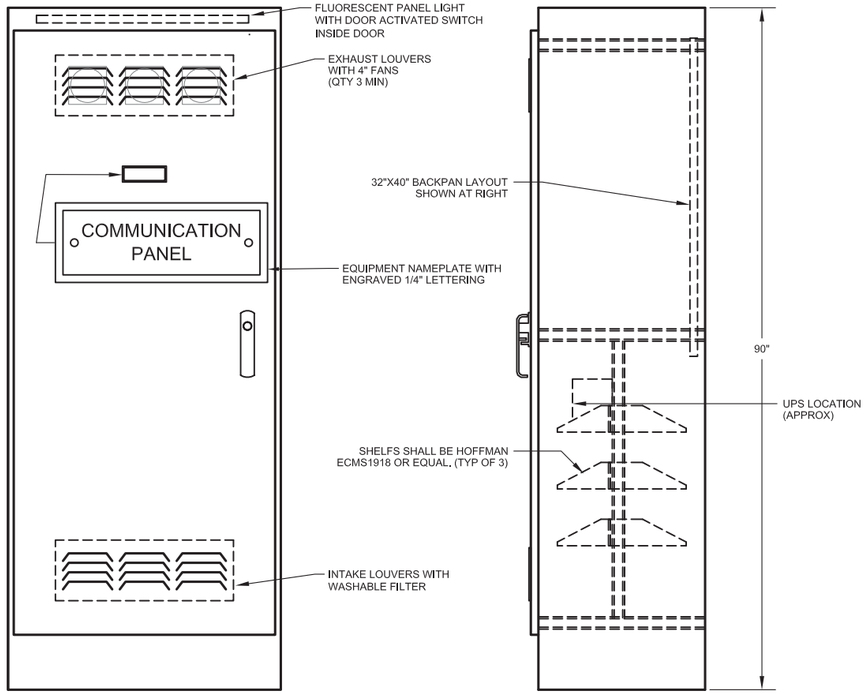

FRONT ELEVATION

SIDE ELEVATION

ELEVATION

1" = 10"

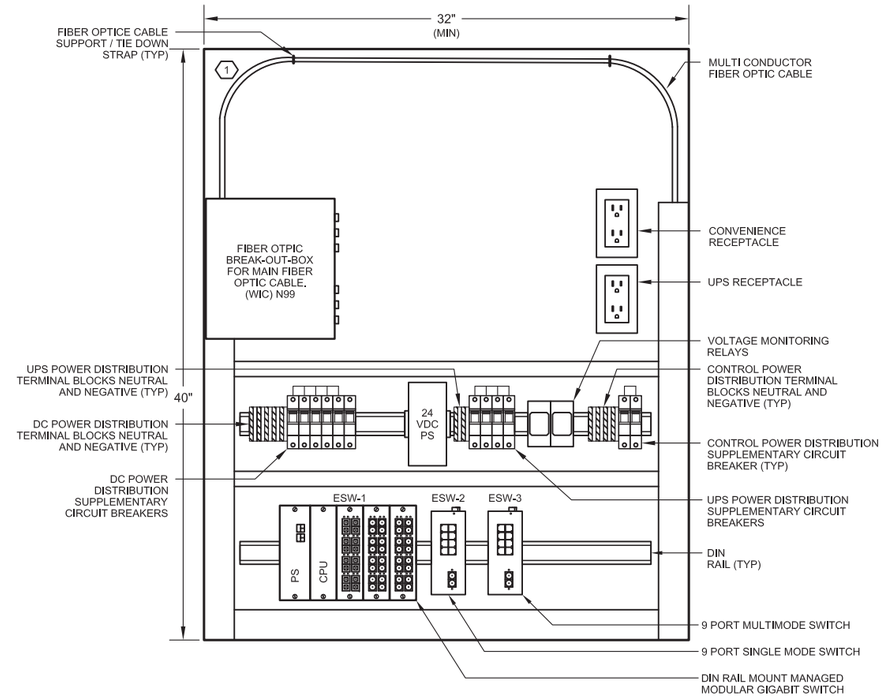

BACKPAN LAYOUT

DRAWING REFERENCED NOTES:

(1) OBSERVE FIBER OPTIC CABLE MINIMUM BEND RADIUS.

PANEL FABRICATION METHODS

1. NEMA 3R, DUAL ACCESS.
2. OUTER DOOR SEALED WITH RUBBERIZED FOAM GASKET.
3. PANEL SHALL BE FABRICATED FROM PAINT BOND GALVANEAL SHEET STEEL.
4. 12 GAUGE EXTERIOR AND 14 GAUGE INTERIOR.
5. ALL SEAMS SHALL HAVE CONTINUOUS WELD GROUND SMOOTH.
6. DOOR TO BE PADLOCKABLE WITH HEAVY DUTY 3 POINT LATCH.
7. DOOR HINGES AND PINS SHALL BE CONTINUOUS, HEAVY DUTY.
8. NO SCREWS, RIVETS, OR BOLTS SHALL PROTRUDE EXTERNALLY.
9. INTERNAL SCREWS, RIVETS, BOLTS, AND NUTS SHALL BE MACHINE THREAD INTO TAPPED BACKPAN.
10. EXTERIOR PANEL COLOR: ANSI 61 GRAY.
11. MOUNTING PAN AND INTERIOR DOOR COLOR: WHITE.
12. FABRICATION AND WIRING SHALL CONFORM TO U.L. AND NEMA STANDARDS.
13. ALL WIRING SHALL BE PERMANENTLY LABELED WITH WIRE MARKERS ON BOTH ENDS.
14. WIRING DIAGRAMS SHALL BE PLACED IN A PLASTIC DRAWING HOLDER PERMANENTLY ATTACHED TO THE INSIDE OF THE FRONT DOOR.
15. AS - BUILT WIRING DIAGRAMS SHALL BE SHIPPED WITH EQUIPMENT.
16. HOFFMAN A903624FSDA FREE-STANDING, DUAL ACCESS OR EQUAL.

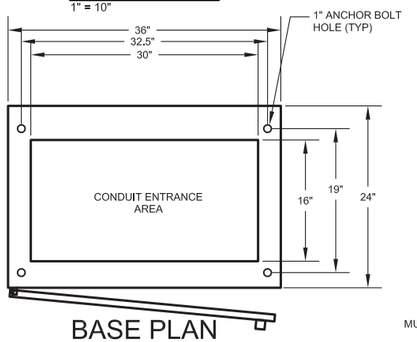

BASE PLAN

1" = 10"

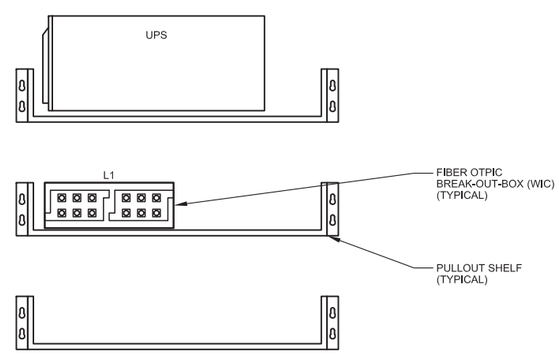

SHELF LAYOUT

1" = 10"

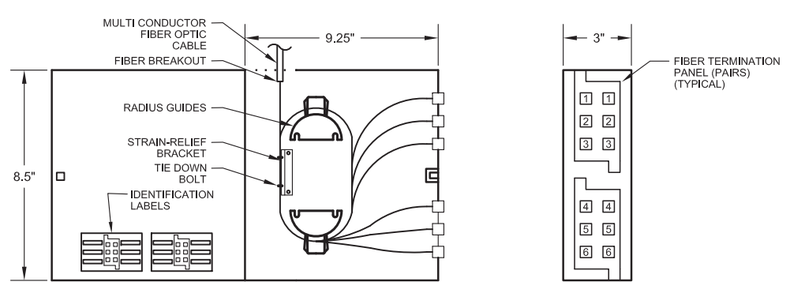

DOOR REAR ELEVATION

FRONT ELEVATION

SIDE ELEVATION

TYPICAL FIBER OPTIC BREAK-OUT-BOX (WIC) ELEVATION

DRAFT
NOT FOR
CONSTRUCTION

FRISCH ENGINEERING, INC.
CONSULTING ELECTRICAL ENGINEERS
13405 FOLSOM BLVD, UNIT 600
FOLSOM, CA 95630
PH 916 353 1025
WWW.FRISCHENGINEERING.COM

CH2MHILL®

NO.	DATE	DESCRIPTION	GM/SPEC	DWN	CHKD	SUPV	APVD BY
1	9/8/14	PRE-FINAL (90%) DESIGN		MBY			TPF
0	4/5/13	INTERMEDIATE (60%) DESIGN		MBY			TPF

REVISIONS

APPROVED BY: TPF

SO	
SUPV	TPF
DSGN	MBY
DWN	MBY, NC
CHKD	MF
OK	TPF
DATE	
SCALES	N/A

TOPOCK GROUNDWATER REMEDIATION PROJECT
REMEDY PRODUCED WATER COMMUNICATION PANEL ELEVATION AND LAYOUT
GAS TRANSMISSION & DISTRIBUTION
PACIFIC GAS AND ELECTRIC COMPANY
SAN FRANCISCO, CALIFORNIA

MICROFILM
BILL OF MATL
DWG LIST
SUPSDS
SUPSD BY
SHEET NO. of SHEETS: E-12-08
REV: 1

FILENAME: FE-E-xxx-1208AD.dwg
PLOT DATE: Aug 25, 2014 PLOT TIME: 3:24:50pm

LEGEND	
SYMBOL	DESCRIPTION
—·—·—	SINGLE MODE FIBER OPTIC CABLE
—··—··—	MULTI-MODE FIBER OPTIC CABLE
- - - - -	10/100BASE-TX CAT5E CABLE

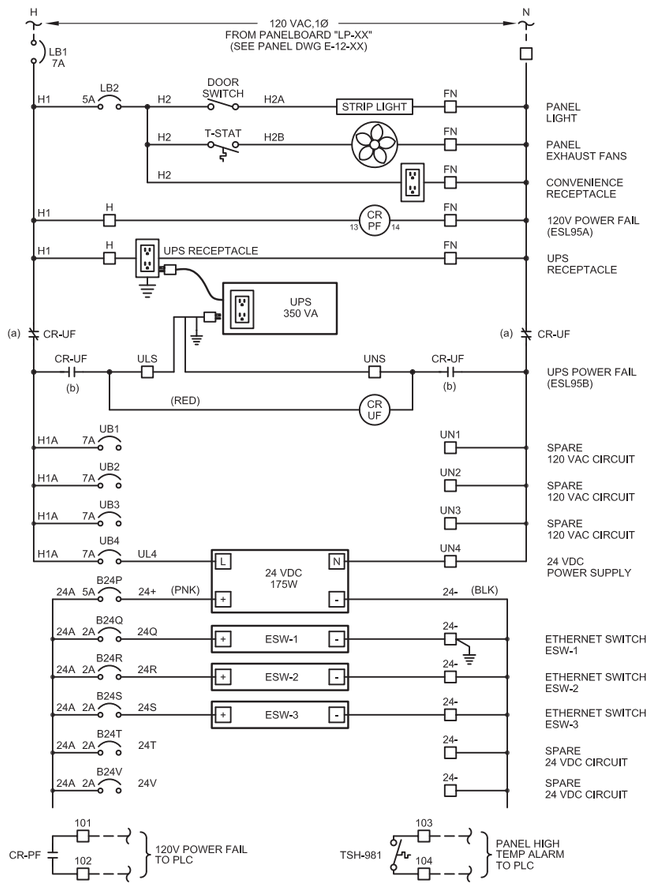

COMMUNICATIONS PANEL POWER DISTRIBUTION DIAGRAM

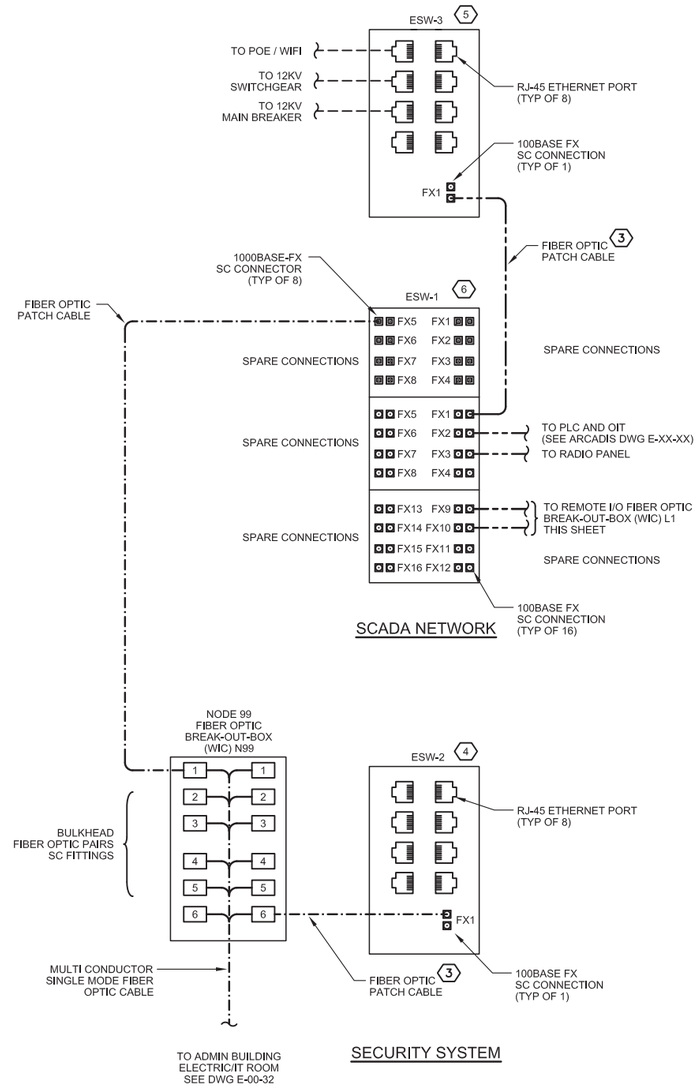

FIBER OPTIC SWITCH DIAGRAM

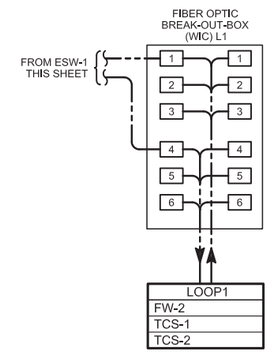

FIBER OPTIC BREAK-OUT-BOX (WIC) DIAGRAMS

DRAWING REFERENCED NOTES:

1. OBSERVE FIBER OPTIC CABLE MINIMUM BEND RADIUS.
2. LC CONNECTOR FOR SINGLEMODE FIBER.
3. PATCH CABLE SHALL BE COORDINATED WITH FIBER CONNECTOR AND ETHERNET SWITCH.
4. SWITCH MODEL NTRON 309FXE-N-SC-15 OR EQUIVALENT.
5. SWITCH MODEL NTRON 309FX-N-SC OR EQUIVALENT.
6. SWITCH MODEL NTRON NT24k-DR24 WITH (2)NT24k-FX8-SC AND (1) NT24K-GXE8-SC-10 OR EQUIVALENT.

DRAFT NOT FOR CONSTRUCTION

FRISCH ENGINEERING, INC.
CONSULTING ELECTRICAL ENGINEERS
13405 FOLSOM BLVD, UNIT 600
FOLSOM, CA 95630
PH 916 353 1025
WWW.FRISCHENGINEERING.COM

CH2MHILL®

NO.	DATE	DESCRIPTION	GM/SPEC	DWN	CHKD	SUPV	APVD BY
1	9/8/14	PRE-FINAL (90%) DESIGN		MBY			TPF
0	4/5/13	INTERMEDIATE (60%) DESIGN		MBY			TPF

REVISIONS

APPROVED BY: TPF

SO	
SUPV	TPF
DSGN	MBY
DWN	MBY, NC
CHKD	MF
OK	TPF
DATE	
SCALES	N/A

TOPOCK GROUNDWATER REMEDIATION PROJECT
REMEDY PRODUCED WATER COMMUNICATION PANEL SCHEMATIC
GAS TRANSMISSION & DISTRIBUTION
PACIFIC GAS AND ELECTRIC COMPANY
SAN FRANCISCO, CALIFORNIA

MICROFILM
BILL OF MATL
DWG LIST
SUPSDS
SUPSD BY
SHEET NO. E-12-09 of SHEETS
REV 1

FILENAME: FE-E-xxx-1209AD.dwg
PLOT DATE: Aug 25, 2014 PLOT TIME: 3:24:58pm

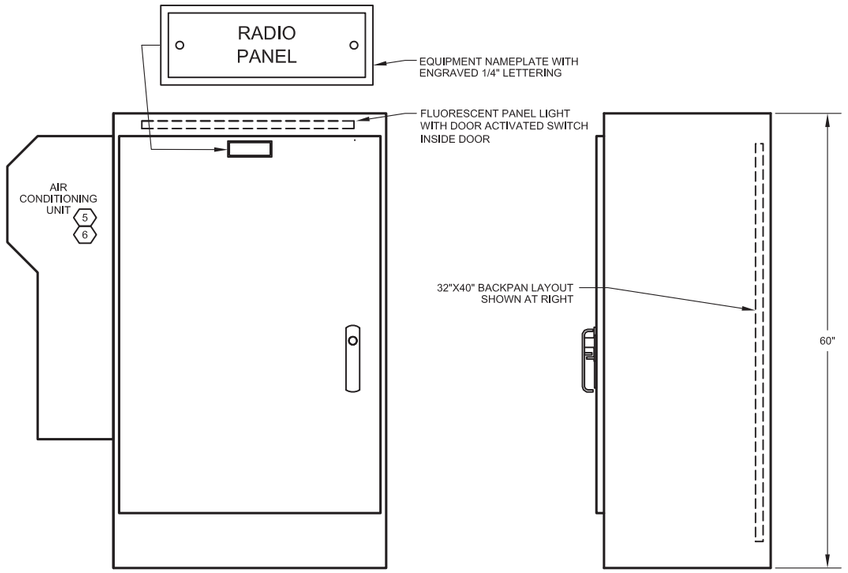

FRONT ELEVATION

SIDE ELEVATION

ELEVATION

1" = 10"

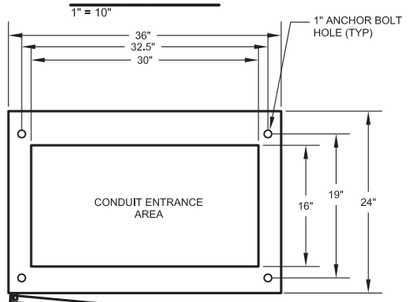

BASE PLAN

1" = 10"

PANEL FABRICATION METHODS

1. NEMA 3R, DUAL ACCESS.
2. OUTER DOOR SEALED WITH RUBBERIZED FOAM GASKET.
3. PANEL SHALL BE FABRICATED FROM PAINT BOND GALVANEAL SHEET STEEL.
4. 12 GAUGE EXTERIOR AND 14 GAUGE INTERIOR.
5. ALL SEAMS SHALL HAVE CONTINUOUS WELD GROUND SMOOTH.
6. DOOR TO BE PADLOCKABLE WITH HEAVY DUTY 3 POINT LATCH.
7. DOOR HINGES AND PINS SHALL BE CONTINUOUS, HEAVY DUTY.
8. NO SCREWS, RIVETS, OR BOLTS SHALL PROTRUDE EXTERNALLY.
9. INTERNAL SCREWS, RIVETS, BOLTS, AND NUTS SHALL BE MACHINE THREAD INTO TAPPED BACKPAN.
10. EXTERIOR PANEL COLOR: ANSI 61 GRAY.
11. MOUNTING PAN AND INTERIOR DOOR COLOR: WHITE.
12. FABRICATION AND WIRING SHALL CONFORM TO U.L. AND NEMA STANDARDS.
13. ALL WIRING SHALL BE PERMANENTLY LABELED WITH WIRE MARKERS ON BOTH ENDS.
14. WIRING DIAGRAMS SHALL BE PLACED IN A PLASTIC DRAWING HOLDER PERMANENTLY ATTACHED TO THE INSIDE OF THE FRONT DOOR.
15. AS - BUILT WIRING DIAGRAMS SHALL BE SHIPPED WITH EQUIPMENT.
16. HOFFMAN A903624FSDA FREE-STANDING, DUAL ACCESS OR EQUAL.

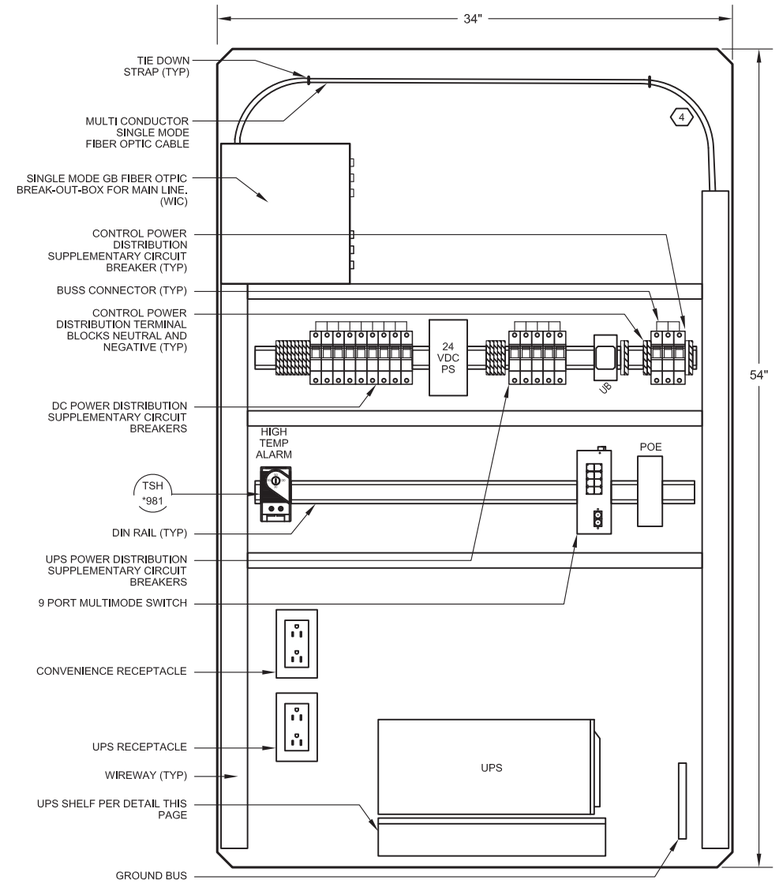

PLC PANEL BACKPAN LAYOUT 1

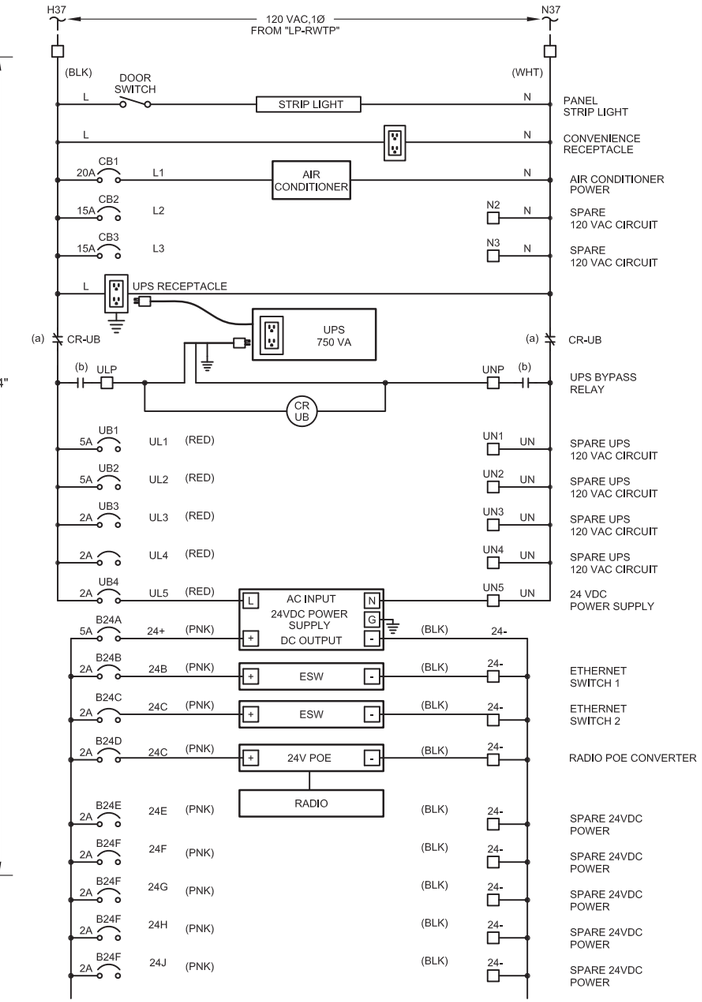

POWER DISTRIBUTION SCHEMATIC

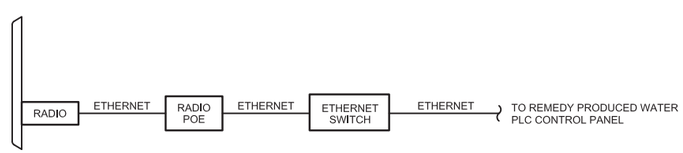

BLOCK DIAGRAM

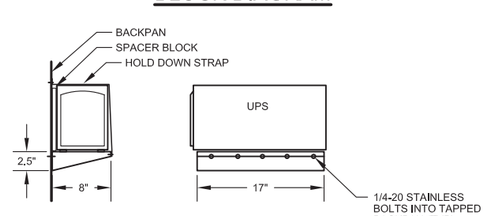

2 3 UPS SHELF DETAIL

SCALE: 1" = 10"

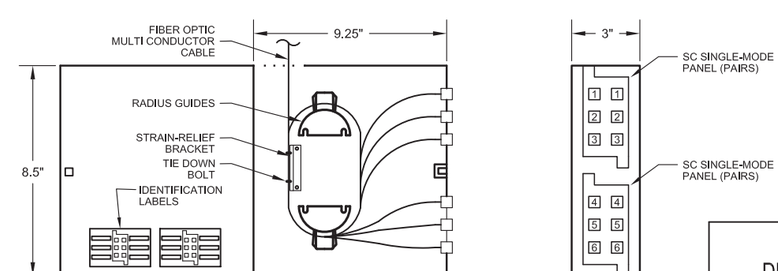

DOOR REAR ELEVATION

FRONT ELEVATION

SIDE ELEVATION

FIBER OPTIC BREAK-OUT-BOX (WIC) ELEVATION

GENERAL NOTES:

1. LAYOUT REPRESENTATIVE OF MAJOR COMPONENTS ONLY. ACTUAL BACKPAN LAYOUT SHALL BE SIMILAR TO LAYOUT SHOWN. SUBMIT SCALED BACKPAN LAYOUT FOR REVIEW.
2. QUANTITY OF TERMINAL BLOCKS, FUSES, AND RELAYS SHALL BE AS DETERMINED BY I/O SCHEDULE, EXAMPLE I/O WIRING DIAGRAMS AND POWER DISTRIBUTION DIAGRAM.
3. DISTRIBUTION DIAGRAM REPRESENTATIVE OF MAJOR COMPONENTS ONLY. ADDITIONAL FUSES, CIRCUITS, AND COMPONENTS CONNECTIONS MAY BE REQUIRED FOR A FUNCTIONAL SYSTEM. ADDITIONAL WIRES, TERMINAL BLOCKS, ETC., SHALL BE LABELLED BY MANUFACTURER AND SHOWN IN THE SUBMITTAL.

DRAWING REFERENCED NOTES:

1. RUN #12 WIRE DIRECT TO GROUND BUS. LIGHTNING ARRESTOR SHALL BE MALE/MALE TYPE.
2. DO NOT BLOCK VENTS WITH SPACER BLOCK. USE TWO.
3. FABRICATED FROM 14 GA (MIN) PAINTED GALVANEAL OR STAINLESS STEEL SOLID SIDES, TOP, BACK AND FRONT WITH CONTINUOUS WELDED SEAMS.
4. OBSERVE FIBER OPTIC CABLE MINIMUM BEND RADIUS.
5. AIR CONDITIONING SHALL BE RITTAL 3305114 OR EQUAL.
6. AIR CONDITIONING INLET AND EXHAUST OPENING LOCATIONS PER MANUFACTURER.

DRAFT NOT FOR CONSTRUCTION

FRISCH ENGINEERING, INC.
CONSULTING ELECTRICAL ENGINEERS
13405 FOLSOM BLVD, UNIT 600
FOLSOM, CA 95630
PH 916 353 1025
WWW.FRISCHENGINEERING.COM

CH2MHILL®

NO.	DATE	DESCRIPTION	GM/SPEC	DWN	CHKD	SUPV	APVD BY
1	9/8/14	PRE-FINAL (90%) DESIGN		MBY			TPF
0	4/5/13	INTERMEDIATE (60%) DESIGN		MBY			TPF

REVISIONS

APPROVED BY: TPF

SO	
SUPV	TPF
DSGN	MBY
DWN	MBY, NC
CHKD	MF
OK	TPF
DATE	
SCALES	N/A

TOPOCK GROUNDWATER REMEDIATION PROJECT
REMEDY PRODUCED WATER RADIO COMMUNICATION PANEL ELEVATION AND LAYOUT
GAS TRANSMISSION & DISTRIBUTION
PACIFIC GAS AND ELECTRIC COMPANY
SAN FRANCISCO, CALIFORNIA

MICROFILM	
BILL OF MATL	
DWG LIST	
SUPSDS	
SUPSD BY	
SHEET NO. of SHEETS	REV
E-12-10	1

PLOT DATE: Aug 25, 2014 PLOT TIME: 3:25:06pm

FILENAME: FE-E-xxx-1210AD.dwg

N1808

PANEL "LP-RWTP-A"

LOCATION: ELECTRICAL ROOM
ENCLOSURE: SURFACE
AIC RATING: 10 KAIC

120 / 208 VOLTS, 3 PHASE, 4 WIRE
225 AMP BUS
225 AMP MAIN BREAKER

BKR NO.	DESCRIPTION	LOAD VA	PHASE AMPS A	B	C	AMPS/ POLE	BKR NO.	BKR NO.	AMPS/ POLE	PHASE AMPS A	B	C	LOAD VA	DESCRIPTION	BKR NO.
1	INDOOR LIGHTS - CHEMICAL ROOM	1142	9.5			20/1	1	2	20/1	7.5			900	CONTROL PANEL	2
3	INDOOR LIGHTS - SEPARATOR. ROOM	1176		9.8		20/1	3	4	20/1		0.0		0	SPARE	4
5	INDOOR LIGHTS - FILTER. ROOM	288			2.4	20/1	5	6	20/1			3.3	400	DISPOSAL	6
7	INDOOR LIGHTS - LAB & ELECTRICAL ROOM	800	6.7			20/1	7	8	20/1	10.0			1200	WATER HEATER	8
9	EXTERIOR LIGHTS	800		6.7		20/1	9	10	20/1		4.2		500	CONDITIONED WATER TANK FARM SOLENOID CP 301	10
11	RECEPTACLES - CHEMICAL ROOM	600			5.0	20/1	11	12	20/1			4.2	500	CONDITIONED WATER TANK FARM SOLENOID CP 302	12
13	RECEPTACLES - CHEMICAL ROOM	800	6.7			20/1	13	14	20/1	0.0			0	SPARE	14
15	RECEPTACLES - SEPARATOR. ROOM	600		5.0		20/1	15	16	20/1		8.3		1000	COMMUNICATIONS PANEL	16
17	RECEPTACLES - SEPARATOR. ROOM	800			6.7	20/1	17	18	20/1			1.7	200	COMMUNICATIONS PANEL - AUXILLARY	18
19	RECEPTACLES - FILTER ROOM	800	6.7			20/1	19	20	20/1	4.2			500	CONDITIONED WATER TANK FARM SOLENOID CP 401	20
21	RECEPTACLES - LAB	400		3.3		20/1	21	22	20/1		4.2		500	SUMP PUMP - DECON PAD	22
23	RECEPTACLES - LAB	800			6.7	20/1	23	24	20/1			4.2	500	SUMP PUMP - CHEMICAL ROOM	24
25	RECEPTACLES - ELECTRICAL ROOM	200	1.7			20/1	25	26	20/1	4.2			500	SUMP PUMP - SEPARATOR ROOM	26
27	GENERATOR CONNECTION PANEL AUX	350		2.9		20/1	27	28	20/2		9.4		1125	SUMP PUMP - INFLUENT TANK FARM	28
29	INFLUENT TANK FARM SOLENOID CP 201	500			4.2	20/1	29	30				9.4	1125		30
31	INFLUENT TANK FARM SOLENOID CP 202	500	4.2			20/1	31	32	20/1	12.5			1500	SUMP PUMP - CONDITIONED WATER TANK FARM	32
33	INFLUENT TANK FARM SOLENOID CP 203	500		4.2		20/1	33	34	20/1		12.5		1500	FILTER PACKAGE 1	34
35	INFLUENT TANK FARM SOLENOID CP 204	500			4.2	20/1	35	36	20/1			12.5	1500	FILTER PACKAGE 2	36
37	TCS RADIO PANEL	1000	8.3			20/1	37	38	225/3	0.0			0.0	MAIN	38
39	CONDITIONED WATER STORAGE TANK CATHODIC	300		2.5		20/1	39	40			0.0		0.0		40
41	CONDITIONED WATER STORAGE TANK ANALYZER	100			0.8	20/1	41	42				0.0	0.0		42

PHASE	A	B	C
LEFT SIDE AMPS	43.7	34.4	29.9
LEFT SIDE KVA	5.24	4.13	3.59
TOTAL PHASE KVA	9.84	8.75	7.81
TOTAL PHASE AMPS	82.0	72.9	65.1
% OF AVERAGE	112	99	89

NEUTRAL

GROUND

A	B	C	PHASE
38.3	38.5	35.2	RIGHT SIDE AMPS
4.60	4.63	4.23	RIGHT SIDE KVA
26.41			TOTAL KVA
73.30			TOTAL AMPS @ 480V, 3P
0.80			DEMAND FACTOR
21.12			LOAD KVA

NOTES:
1 MEANS OF WIRE COLOR CODING SHALL BE POSTED ON PANELBOARD PER NEC 210 (4)
2 ASTERISK (*) DENOTES GFI BREAKER REQUIRED WITH 5 MA SENSITIVITY
3 TILDA (~) DENOTES GFI BREAKER REQUIRED WITH 30 MA SENSITIVITY

PANEL "LP-RWTP-B"

LOCATION: ELECTRICAL ROOM
ENCLOSURE: SURFACE
AIC RATING: 10 KAIC

120 / 208 VOLTS, 3 PHASE, 4 WIRE
225 AMP BUS
150 AMP MAIN BREAKER

BKR NO.	DESCRIPTION	LOAD VA	PHASE AMPS A	B	C	AMPS/ POLE	BKR NO.	BKR NO.	AMPS/ POLE	PHASE AMPS A	B	C	LOAD VA	DESCRIPTION	BKR NO.
1	MINI-SPLIT CONDENSER HVAC 1	1500	12.5			30/2	1	2	20/1	0.0			0	SPARE	2
3		1500		12.5			3	4	20/1		0.0		0	SPARE	4
5	MINI-SPLIT CONDENSER HVAC 2	1500			12.5	30/2	5	6	20/1			0.0	0	SPARE	6
7		1500	12.5				7	8	20/1	0.0			0	SPARE	8
9	MINI-SPLIT CONDENSER HVAC 3	1500		12.5		30/2	9	10	20/1		0.0		0	SPARE	10
11		1500			12.5		11	12	40/2			0.0	0	SPARE	12
13	HEAT PUMP CHILLER	4000	33.3			70/2	13	14		0.0			0		14
15		4000		33.3			15	16	40/2		0.0		0	SPARE	16
17	SPARE	0			0.0	20/1	17	18				0.0	0		18
19	SPARE	0	0.0			20/1	19	20	50/3	0.0			0	SPARE	20
21	SPARE	0		0.0		20/1	21	22			0.0		0		22
23	SPARE	0			0.0	20/1	23	24				0.0	0		24
25	SPARE	0	0.0			20/1	25	26	20/1	0.0			0	SPARE	26
27	SPACE	0		0.0			27	28			0.0		0	SPACE	28
29	SPACE	0			0.0		29	30				0.0	0	SPACE	30
31	SPACE	0	0.0				31	32		0.0			0	SPACE	32
33	SPACE	0		0.0			33	34			0.0		0	SPACE	34
35	SPACE	0			0.0		35	36				0.0	0	SPACE	36
37	SPACE	0	0.0				37	38	150/3	0.0			0	MAIN	38
39	SPACE	0		0.0			39	40			0.0		0		40
41	SPACE	0			0.0		41	42				0.0	0		42

PHASE	A	B	C
LEFT SIDE AMPS	58.3	58.3	25.0
LEFT SIDE KVA	7.00	7.00	3.00
TOTAL PHASE KVA	7.00	7.00	3.00
TOTAL PHASE AMPS	58.3	58.3	25.0
% OF AVERAGE	124	124	53

NEUTRAL

GROUND

A	B	C	PHASE
0.0	0.0	0.0	RIGHT SIDE AMPS
0.00	0.00	0.00	RIGHT SIDE KVA
17.00			TOTAL KVA
47.19			TOTAL AMPS @ 480V, 3P
0.80			DEMAND FACTOR
13.60			LOAD KVA

NOTES:
1 MEANS OF WIRE COLOR CODING SHALL BE POSTED ON PANELBOARD PER NEC 210 (4)
2 ASTERISK (*) DENOTES GFI BREAKER REQUIRED WITH 5 MA SENSITIVITY
3 TILDA (~) DENOTES GFI BREAKER REQUIRED WITH 30 MA SENSITIVITY

DRAFT
NOT FOR
CONSTRUCTION

FRISCH ENGINEERING, INC.
CONSULTING ELECTRICAL ENGINEERS
13405 FOLSOM BLVD, UNIT 600
FOLSOM, CA 95630
PH 916 353 1025
WWW.FRISCHENGINEERING.COM

CH2MHILL®

REFERENCE (TYP)

REVISIONS

NO.	DATE	DESCRIPTION	GM/SPEC	DWN	CHKD	SUPV	APVD BY
1	9/8/14	PRE-FINAL (90%) DESIGN		MBY			TPF
0	4/5/13	INTERMEDIATE (60%) DESIGN		MBY			TPF

APPROVED BY: TPF
SO
SUPV TPF
DSGN MBY
DWN MBY, NC
CHKD MF
OK TPF
DATE
SCALES N/A

TOPOCK GROUNDWATER REMEDIATION PROJECT
REMEDY PRODUCED WATER CONDITIONING PLANT PANELBOARD SCHEDULES
GAS TRANSMISSION & DISTRIBUTION
PACIFIC GAS AND ELECTRIC COMPANY
SAN FRANCISCO, CALIFORNIA

MICROFILM
BILL OF MATL
DWG LIST
SUPSDS
SUPSD BY
SHEET NO. E-12-11 of SHEETS
REV 1

PLOT DATE: Aug 25, 2014 PLOT TIME: 3:25:22pm
FILENAME: FE-E-xxx-1211AD.dwg

N1808

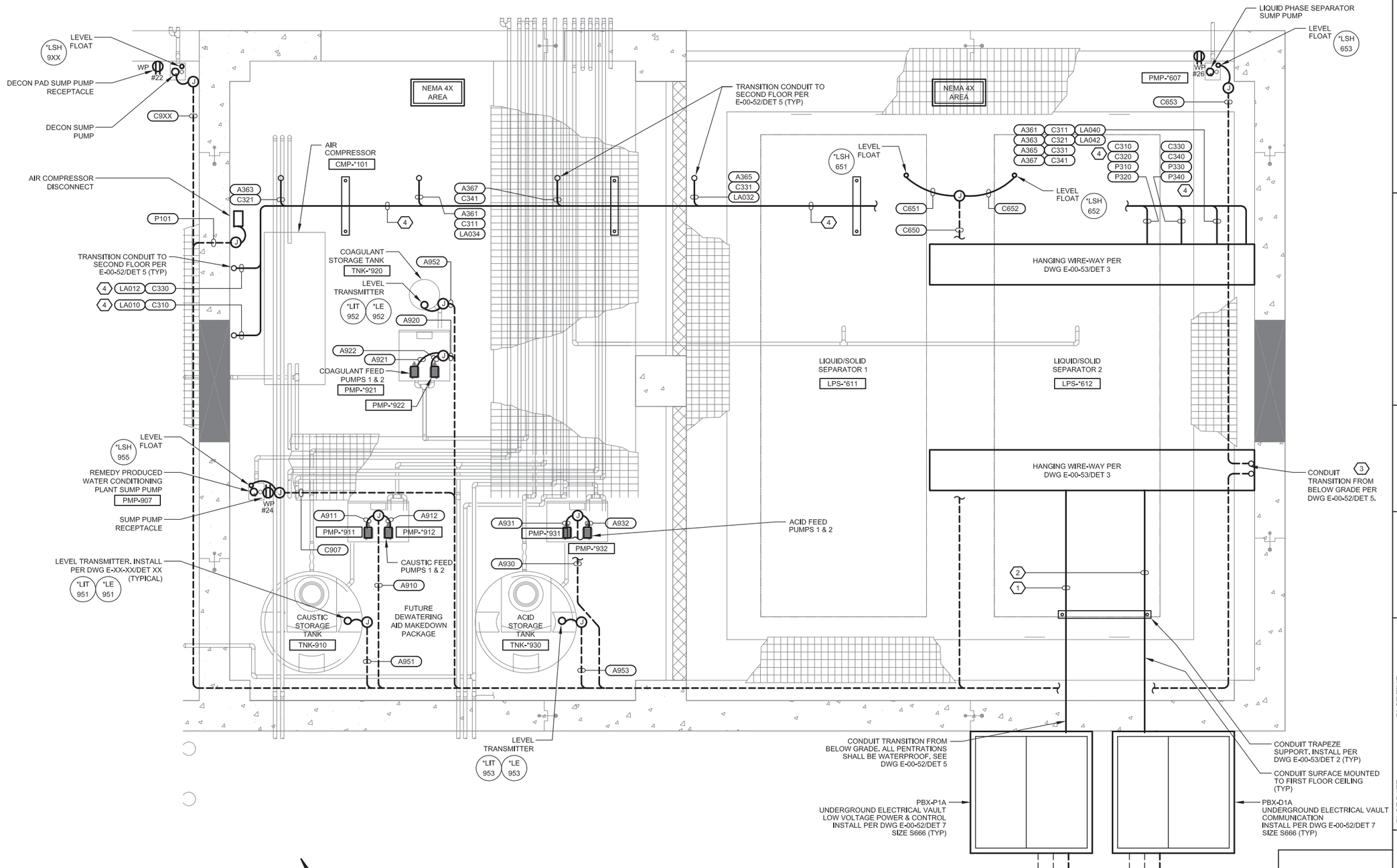

FIRST FLOOR POWER AND CONTROL PLAN

DRAWING REFERENCED NOTES:

1. DUCTBANK INCLUDES THE FOLLOWING CONDUIT:

C010	C020	C030	C070	C080
C201	C202	C203	C204	C210
C220	C230	C240	C251	C253
C255	C257	C259	C401	C410
C415	C416	C451	C453	C459
C551	LA020	LA027	LA028	LA029
LA030	LA031	LA033	LA034	LA035
LA037	LA038	LA039	LA041	P020
P030	P040B	P040A	P010A	P201A
P202A	P203A	P204A	P310A	P320A
P330A	P340A	P405A	P406A	X010
X010	X010	X010	X020	X020
X020	X020	X020	X020	X020
X020	X020	X020	X020	X020

2. DUCTBANK INCLUDES THE FOLLOWING CONDUIT:

A070	A080A	A080B	A252	A254
A256	A258	A401	A452	A454
A552	A581	D010	D011	D020
D030	F00	F08	F010	F99
X010	X010	X010	X020	X020
X020	X020	X020	X020	X020
X020	X020			

3. CONDUIT TRANSITIONS FROM BELOW GRADE TO SURFACE MOUNT VERTICALLY UP WALL TO CEILING MOUNTED JUNCTION BOX.
4. CONDUIT SURFACE MOUNTED TO FIRST FLOOR CEILING VIA TRAPEZE SUPPORT. INSTALL PER DWG E-00-53/DET 2

ELECTRICAL PLAN NOTES:

1. SEE ELECTRICAL PLAN NOTES ON DRAWING E-00-02.

DRAFT NOT FOR CONSTRUCTION

FRISCH ENGINEERING, INC.
CONSULTING ELECTRICAL ENGINEERS
13405 FOLSOM BLVD, UNIT 600
FOLSOM, CA 95630
PH 916 353 1025
WWW.FRISCHENGINEERING.COM

CH2MHILL®

REVISIONS

NO.	DATE	DESCRIPTION	GM/SPEC	DWN	CHKD	SUPV	APVD BY
1	9/8/14	PRE-FINAL (90%) DESIGN		MBY			TPF
0	4/5/13	INTERMEDIATE (60%) DESIGN		MBY			TPF

APPROVED BY: TPF

SO	
SUPV	TPF
DSGN	MBY
DWN	MBY, NC
CHKD	MF
OK	TPF
DATE	
SCALES	N/A

TOPOCK GROUNDWATER REMEDIATION PROJECT
REMEDY PRODUCED WATER CONDITIONING PLANT 1ST FLOOR POWER & CONTROL PLAN
GAS TRANSMISSION & DISTRIBUTION
PACIFIC GAS AND ELECTRIC COMPANY
SAN FRANCISCO, CALIFORNIA

MICROFILM	
BILL OF MATL	
DWG LIST	
SUPSDS	
SUPSD BY	
SHEET NO. of SHEETS	
E-12-20	REV 1

PLOT TIME: 8:55:00am
PLOT DATE: Aug 27, 2014
FILENAME: FE-E-xxx-1220AD.dwg
N1808

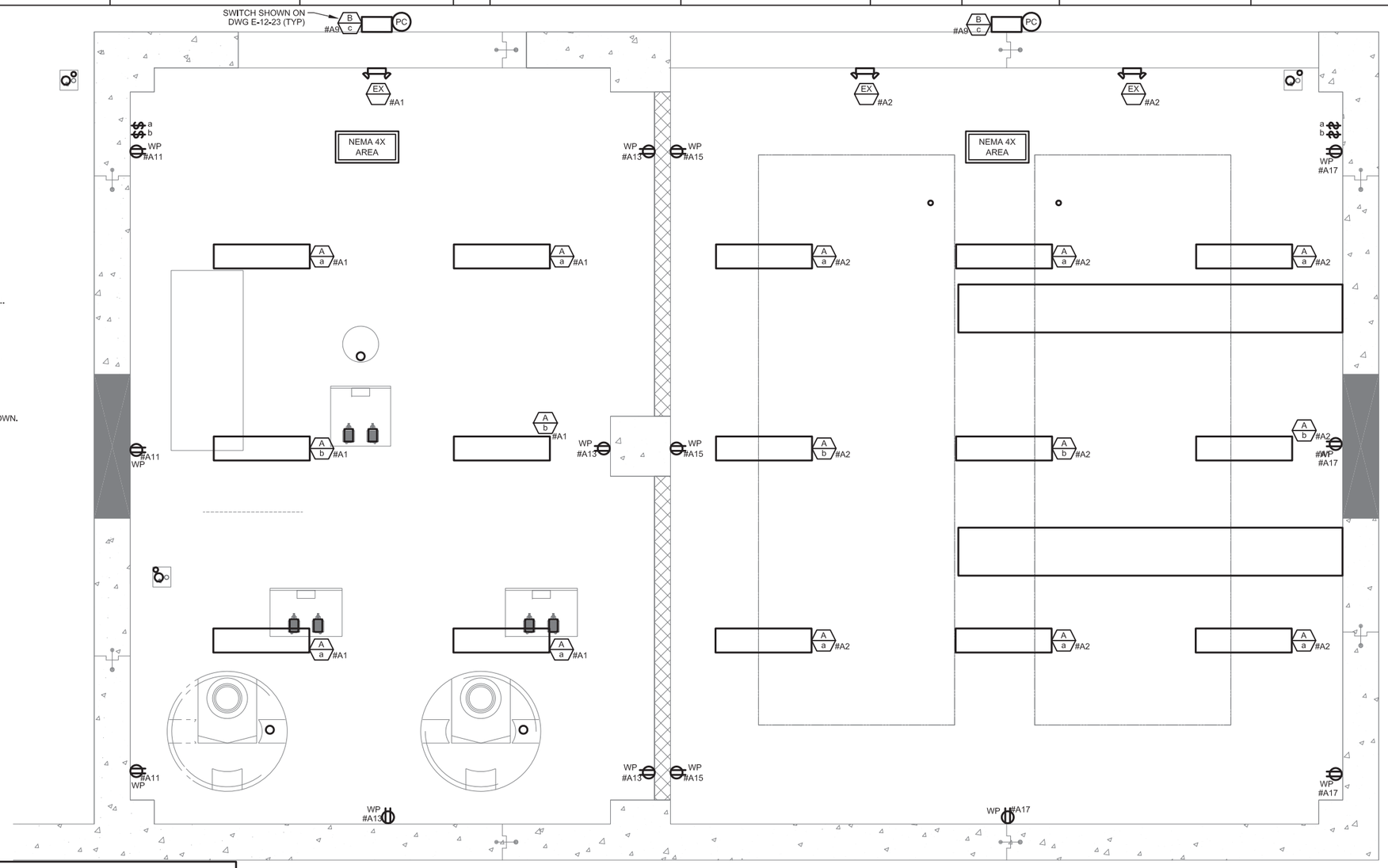

GENERAL NOTES THAT APPLY TO LIGHTING AND RECEPTACLE PLAN.

1. THESE NOTES SHALL APPLY TO ALL EQUIPMENT OR FIXTURES WITH ELECTRICAL CONNECTIONS BUT WITHOUT CONDUITS SHOWN, CONDUIT NUMBERS, OR NOT LISTED IN SCHEDULE.
2. PROVIDE AND INSTALL NECESSARY WIRES IN SURFACE MOUNT 3/4" (MINIMUM) CONDUIT FOR FOR ELECTRICAL FIXTURE ARRANGEMENT AS SHOWN. MAXIMUM 3 CIRCUITS PER CONDUIT SECTION OVER 24" IN LENGTH. CONDUITS SHALL NOT EXCEED 40% FILL.
3. CONDUITS ABOVE CEILING SHALL BE EMT WITH COMPRESSION STYLE FITTINGS. CONDUITS IN COROSIVE AREAS SHALL BE GRS-PVC. CONDUITS BELOW CEILING SHALL BE GRS. ACCESS TO ATTIC AREA SHALL NOT BE REQUIRED TO INSTALL CONDUCTORS.
4. SWITCH TYPE: T= TIME SWITCH, M= MOTION DETECTOR, 3= 3-WAY OR PER SCHEDULE.
5. CONDUITS UNDER SLAB SHALL BE PVC-40 WITH STUB-OUTS PER EXPOSED CONDUIT TRANSITION DETAIL.
6. DEVICE BOXES AND CONDUIT BODIES SHALL BE STAMPED STEEL.
7. CONDUCTORS SHALL BE COPPER TYPE THHN, SOLID, #12 AWG (MINIMUM).
8. MOUNT CONDUITS USING UL LISTED STRAPS AND CLAMPS.
9. USE SS EXPANSION WEDGE ANCHORS OR WOOD SCREWS AS NECESSARY FOR EQUIPMENT MOUNTING.
10. EXPOSED CONDUIT SHALL BE PAINTED WITH WALL AND/OR CEILING.
11. PROVIDE AND INSTALL FIXTURES PER SCHEDULE THIS PAGE, QUANTITY AS SHOWN IN DRAWINGS.
12. PROVIDE AND INSTALL ALL DEVICE BOXES, JUNCTION BOXES, RECEPTACLES, SWITCHES, AND COVERS MOUNT ALL RECEPTACLES AT 48" AFF WHERE LOCATED ABOVE CABINETS AND 18" OTHERWISE.
13. RECEPTACLES TO BE GROUND FAULT INTERRUPTER (GFI) TYPE AND WEATHERPROOF (WP) WHERE SHOWN.
14. SEE ELECTRICAL SYMBOLS AND ABBREVIATIONS DRAWING FOR SYMBOL DEFINITION.
15. ALL WORK SHALL CONFORM TO LOCAL CODES AND NATIONAL ELECTRIC CODE.

FIXTURE SCHEDULE

CODE LETTER	FIXTURE TYPE	FIXTURE LAMPS	WATTS/ FIXTURE	MANUFACTURER OR APPROVED EQUAL	MOUNTING ARRANGEMENT	NOTES
A	STRIP LUMINAIRE, 4 FT MOLDED FIBERGLASS POLYESTER BODY VAPORTIGHT HI IMPACT ACRYLIC LENS	59 LED 5700K	59W	LITHONIA VAP SYMMETRIC	CEILING MOUNT FIXTURE AT 8.5 FEET	UL LISTED FOR WET LOCATIONS
B	WALL PACK LIGHT, TYP 3 DISTRIBUTION DARK BRONZE POWDER COAT ALUMINUM CASE	30C LED 700 MA 5000K	67W MVOLT	LITHONIA TWP	WALL MOUNT ON BUILDING AT 12 FEET	WITH PHOTOCELL CNTRL U.L. LISTED FOR WET LOCATIONS TYPE 3 DISTRIBUTION
E	EMERGENCY LIGHT PACK WITH INTEGRAL BATTERY CHARGER THERMOPLASTIC ENCLOSURE	2 LED 3W 3.6 VOLT	6W 120 VAC	LITHONIA ELM2 LED HO	WALL MOUNT AT 7.5 FT	NICAD BATTERIES
EF-1300	12" EXHAUST FAN		1/8 HP 120 VAC 1 PHASE	PER CIVIL DWGS	WALL MOUNT	SWITCHED WITH LIGHTS
EF-1301	36" EXHAUST FAN		1/12 HP 120 VAC 1 PHASE	PER CIVIL DWGS	WALL MOUNT	SWITCHED WITH LIGHTS
EX	EMERGENCY AND EXIT LIGHT PACK WITH INTEGRAL BATTERY CHARGER THERMOPLASTIC ENCLOSURE LED LAMPS WITH RED LED SIGN	2 LED 3W 9.6 VOLT	10W 120 VAC	LITHONIA LHQM LED HO	WALL MOUNT AT 7.5 FT	NICAD BATTERIES

FIRST FLOOR LIGHTING AND RECEPTACLE PLAN

0 30 60 90

SCALE: 1"=30'

DRAFT NOT FOR CONSTRUCTION

FRISCH ENGINEERING, INC.
CONSULTING ELECTRICAL ENGINEERS
13405 FOLSOM BLVD, UNIT 600
FOLSOM, CA 95630
PH 916 353 1025
WWW.FRISCHENGINEERING.COM

CH2MHILL®

NO.	DATE	DESCRIPTION	GM/SPEC	DWN	CHKD	SUPV	APVD BY
1	9/8/14	PRE-FINAL (90%) DESIGN		MBY			TPF
0	4/5/13	INTERMEDIATE (60%) DESIGN		MBY			TPF

REVISIONS

APPROVED BY: TPF

SO	
SUPV	TPF
DSGN	MBY
DWN	MBY, NC
CHKD	MF
OK	TPF
DATE	
SCALES	N/A

TOPOCK GROUNDWATER REMEDIATION PROJECT
REMEDY PRODUCED WATER CONDITIONING PLANT 1ST FLOOR LIGHTING AND RECEPTACLE PLAN
GAS TRANSMISSION & DISTRIBUTION
PACIFIC GAS AND ELECTRIC COMPANY
SAN FRANCISCO, CALIFORNIA

MICROFILM
BILL OF MATL
DWG LIST
SUPSDS
SUPSD BY
SHEET NO. E-12-21 of SHEETS
REV 1

PLOT DATE: Aug 26, 2014 PLOT TIME: 1:55:51pm
FILENAME: FE-E-xxx-1220AD.dwg

N1808

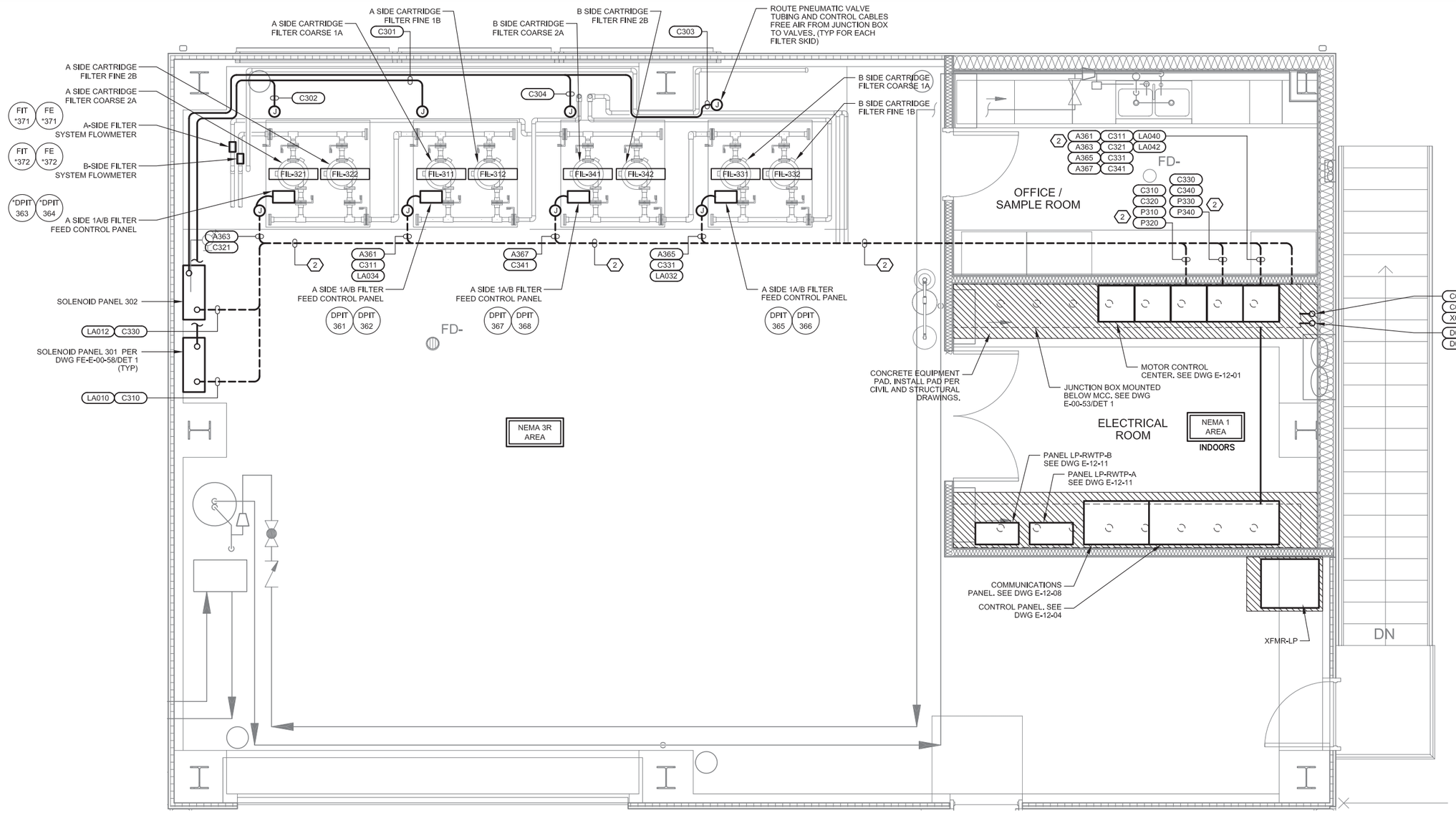

DRAWING REFERENCED NOTES:

1. CONDUITS CONTINUED ON E-12-21
2. CONDUIT SURFACE MOUNTED TO FIRST FLOOR CEILING VIA TRAPEZE SUPPORT. SEE DWG E-12-20

ELECTRICAL PLAN NOTES:

1. SEE ELECTRICAL PLAN NOTES ON DRAWING E-00-02.

0 30 60 90
SCALE: 1"=30'

SECOND FLOOR POWER AND CONTROL PLAN

DRAFT NOT FOR CONSTRUCTION

FRISCH ENGINEERING, INC.
CONSULTING ELECTRICAL ENGINEERS
13405 FOLSOM BLVD, UNIT 600
FOLSOM, CA 95630
PH 916 353 1025
WWW.FRISCHENGINEERING.COM

CH2MHILL®

NO.	DATE	DESCRIPTION	GM/SPEC	DWN	CHKD	SUPV	APVD BY
1	9/8/14	PRE-FINAL (90%) DESIGN		MBY			TPF
0	4/5/13	INTERMEDIATE (60%) DESIGN		MBY			TPF

REVISIONS

APPROVED BY: TPF
SO
SUPV TPF
DSGN MBY
DWN MBY, NC
CHKD MF
OK TPF
DATE
SCALES N/A

TOPOCK GROUNDWATER REMEDIATION PROJECT
REMEDY PRODUCED WATER CONDITIONING PLANT 2ND FLOOR POWER & CONTROL PLAN
GAS TRANSMISSION & DISTRIBUTION
PACIFIC GAS AND ELECTRIC COMPANY
SAN FRANCISCO, CALIFORNIA

MICROFILM
BILL OF MATL
DWG LIST
SUPSDS
SUPSD BY
SHEET NO. E-12-22 of SHEETS
REV 1

FILENAME: FE-E-xxx-1222AD.dwg
PLOT DATE: Aug 26, 2014 PLOT TIME: 13:55:20pm

GENERAL NOTES THAT APPLY TO LIGHTING AND RECEPTACLE PLAN.

1. THESE NOTES SHALL APPLY TO ALL EQUIPMENT OR FIXTURES WITH ELECTRICAL CONNECTIONS BUT WITHOUT CONDUITS SHOWN, CONDUIT NUMBERS, OR NOT LISTED IN SCHEDULE.
2. PROVIDE AND INSTALL NECESSARY WIRES IN SURFACE MOUNT 3/4" (MINIMUM) CONDUIT FOR FOR ELECTRICAL FIXTURE ARRANGEMENT AS SHOWN. MAXIMUM 3 CIRCUITS PER CONDUIT SECTION OVER 24" IN LENGTH. CONDUITS SHALL NOT EXCEED 40% FILL.
3. CONDUITS ABOVE CEILING SHALL BE EMT WITH COMPRESSION STYLE FITTINGS. CONDUITS IN COROSIVE AREAS SHALL BE GRS-PVC. CONDUITS BELOW CEILING SHALL BE GRS. ACCESS TO ATTIC AREA SHALL NOT BE REQUIRED TO INSTALL CONDUCTORS.
4. SWITCH TYPE: T= TIME SWITCH, M= MOTION DETECTOR, 3= 3-WAY OR PER SCHEDULE.
5. CONDUITS UNDER SLAB SHALL BE PVC-40 WITH STUB-OUTS PER EXPOSED CONDUIT TRANSITION DETAIL.
6. DEVICE BOXES AND CONDUIT BODIES SHALL BE STAMPED STEEL.
7. CONDUCTORS SHALL BE COPPER TYPE THHN, SOLID, #12 AWG (MINIMUM).
8. MOUNT CONDUITS USING UL LISTED STRAPS AND CLAMPS.
9. USE SS EXPANSION WEDGE ANCHORS OR WOOD SCREWS AS NECESSARY FOR EQUIPMENT MOUNTING.
10. EXPOSED CONDUIT SHALL BE PAINTED WITH WALL AND/OR CEILING.
11. PROVIDE AND INSTALL FIXTURES PER SCHEDULE ON DWG E-12-21, QUANTITY AS SHOWN IN DRAWINGS.
12. PROVIDE AND INSTALL ALL DEVICE BOXES, JUNCTION BOXES, RECEPTACLES, SWITCHES, AND COVERS MOUNT ALL RECEPTACLES AT 48" AFF WHERE LOCATED ABOVE CABINETS AND 18" OTHERWISE.
13. RECEPTACLES TO BE GROUND FAULT INTERRUPTER (GFI) TYPE AND WEATHERPROOF (WP) WHERE SHOWN.
14. SEE ELECTRICAL SYMBOLS AND ABBREVIATIONS DRAWING FOR SYMBOL DEFINITION.
15. ALL WORK SHALL CONFORM TO LOCAL CODES AND NATIONAL ELECTRIC CODE.

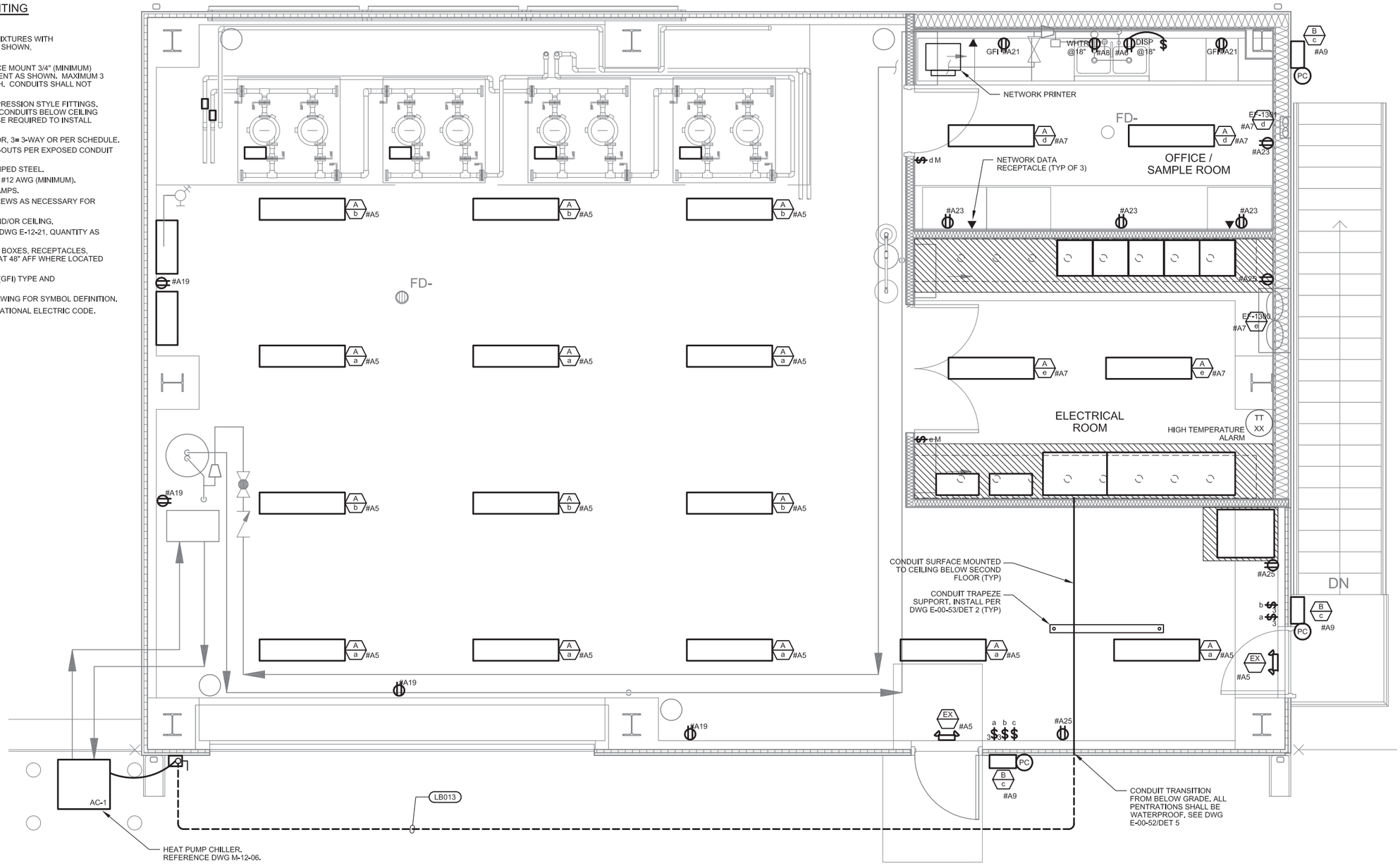

0 30 60 90
SCALE: 1"=30'

SECOND FLOOR LIGHTING AND RECEPTACLE PLAN

DRAFT NOT FOR CONSTRUCTION

FRISCH ENGINEERING, INC.
CONSULTING ELECTRICAL ENGINEERS
13405 FOLSOM BLVD, UNIT 600
FOLSOM, CA 95630
PH 916 353 1025
WWW.FRISCHENGINEERING.COM

CH2MHILL®

NO.	DATE	DESCRIPTION	GM/SPEC	DWN	CHKD	SUPV	APVD BY
1	9/8/14	PRE-FINAL (90%) DESIGN		MBY			TPF
0	4/5/13	INTERMEDIATE (60%) DESIGN		MBY			TPF

REVISIONS

APPROVED BY: TPF
SO
SUPV TPF
DSGN MBY
DWN MBY, NC
CHKD MF
OK TPF
DATE
SCALES N/A

TOPOCK GROUNDWATER REMEDIATION PROJECT
REMEDY PRODUCED WATER CONDITIONING PLANT 2ND FLOOR LIGHTING AND RECEPTACLE PLAN
GAS TRANSMISSION & DISTRIBUTION
PACIFIC GAS AND ELECTRIC COMPANY
SAN FRANCISCO, CALIFORNIA

MICROFILM
BILL OF MATL
DWG LIST
SUPSDS
SUPSD BY
SHEET NO. of SHEETS
E-12-23
REV 1

FILENAME: FE-E-xxx-1222AD.dwg
PLOT DATE: Aug 26, 2014 PLOT TIME: 1:55:01pm

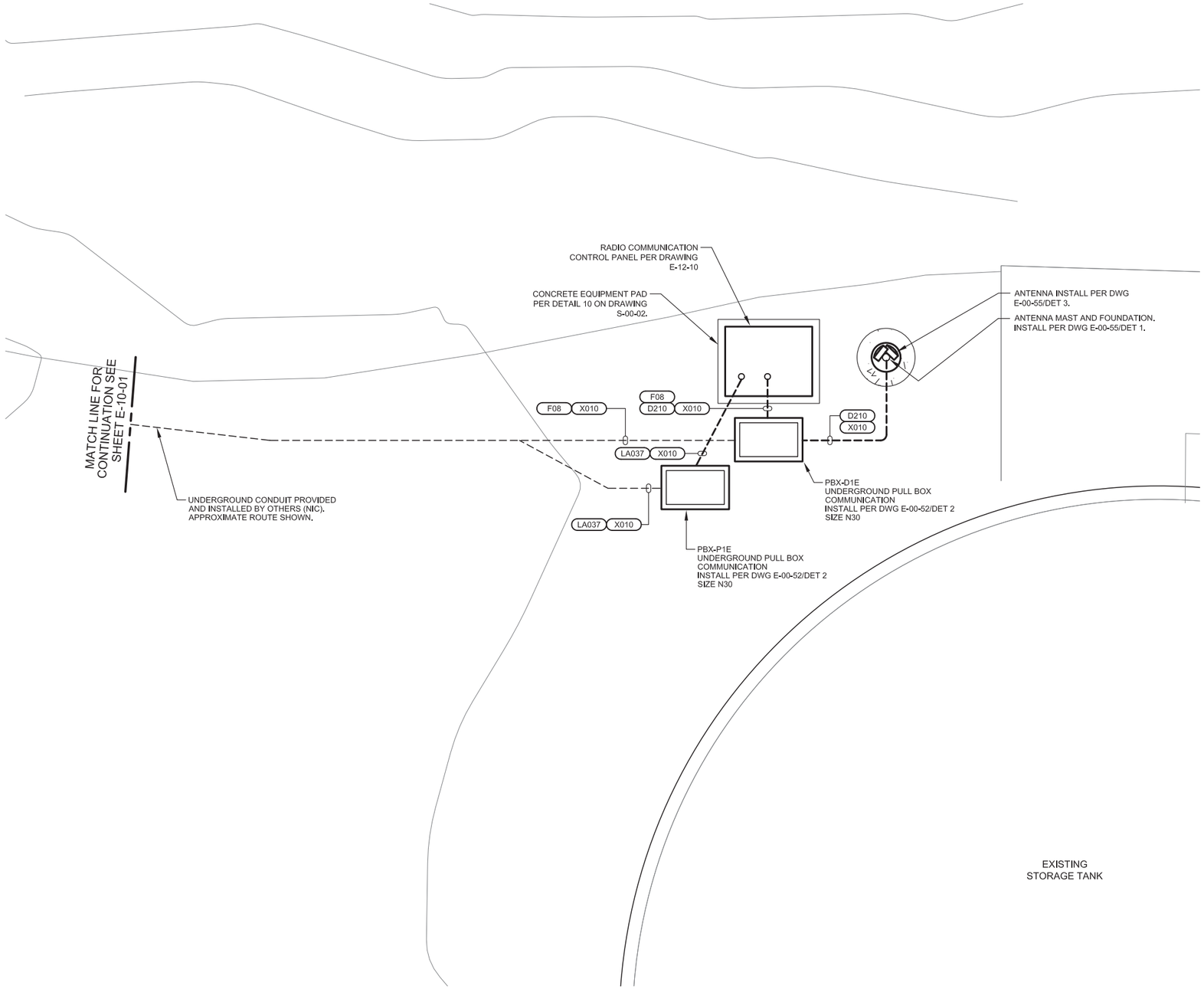

ELECTRICAL PLAN NOTES:

1. SEE ELECTRICAL PLAN NOTES ON DRAWING E-00-02.

0 2 4 6
SCALE: 1/2"=1'

EXISTING STORAGE TANK AREA PLAN

N

DRAFT
NOT FOR
CONSTRUCTION

FRISCH ENGINEERING, INC.
CONSULTING ELECTRICAL ENGINEERS
13405 FOLSOM BLVD, UNIT 600
FOLSOM, CA 95630
PH 916 353 1025
WWW.FRISCHENGINEERING.COM

CH2MHILL®

NO.	DATE	DESCRIPTION	GM/SPEC	DWN	CHKD	SUPV	APVD BY
1	9/8/14	PRE-FINAL (90%) DESIGN		MBY			TPF
0	4/5/13	INTERMEDIATE (60%) DESIGN		MBY			TPF

REVISIONS

APPROVED BY: TPF

SO
SUPV TPF
DSGN MBY
DWN MBY, NC
CHKD MF
OK TPF
DATE
SCALES N/A

TOPOCK GROUNDWATER REMEDIATION PROJECT
TCS EXISTING WATER STORAGE TANK AREA PLAN
GAS TRANSMISSION & DISTRIBUTION
PACIFIC GAS AND ELECTRIC COMPANY
SAN FRANCISCO, CALIFORNIA

MICROFILM
BILL OF MATL
DWG LIST
SUPSDS
SUPSD BY
SHEET NO. of SHEETS
E-12-24
REV 1

FILENAME: FE-E-xxx-1224AD.dwg
PLOT DATE: Aug 25, 2014 PLOT TIME: 3:23:13pm

N1808

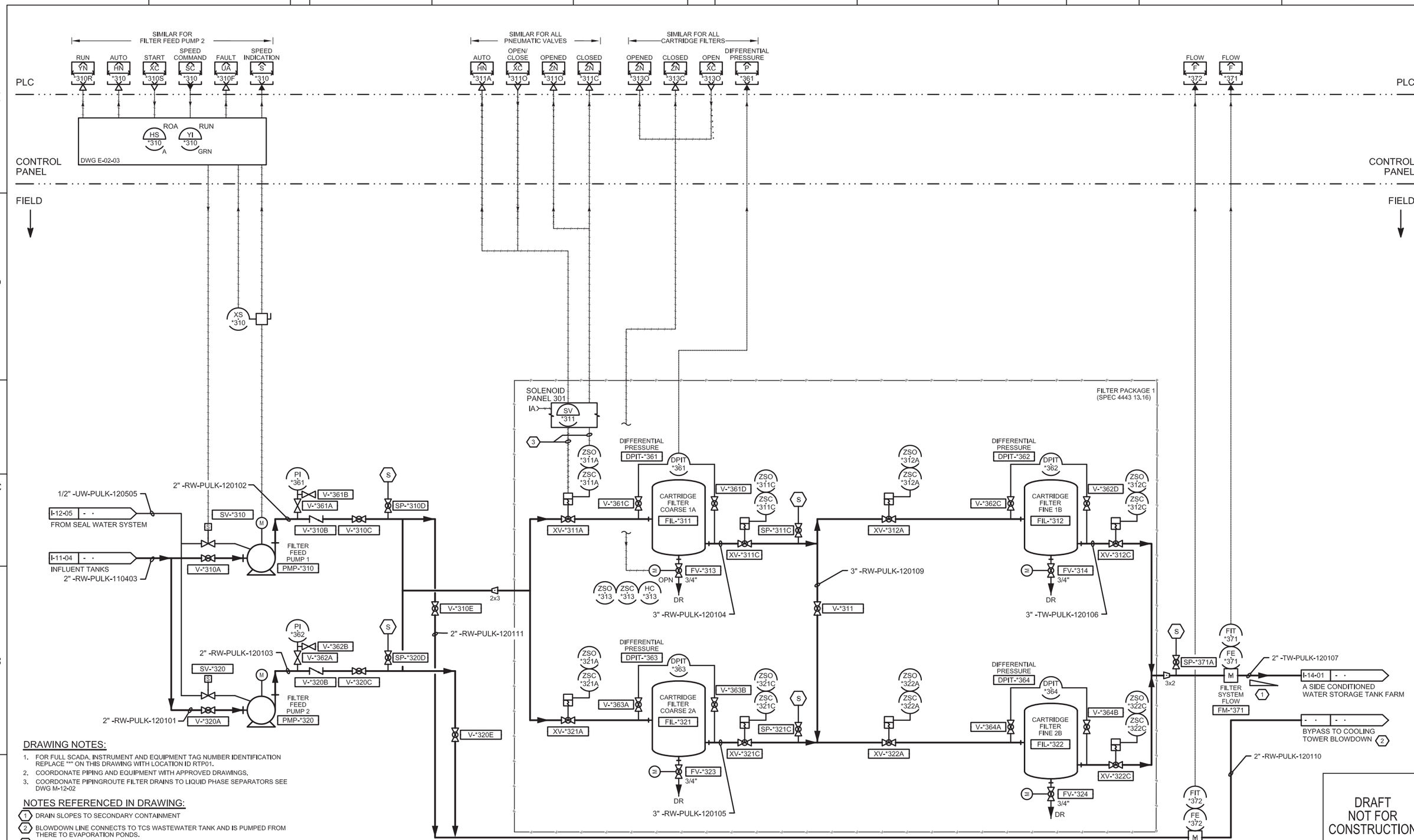

FILTER SYSTEM - A SIDE

DRAWING NOTES:

1. FOR FULL SCADA, INSTRUMENT AND EQUIPMENT TAG NUMBER IDENTIFICATION REPLACE "*" ON THIS DRAWING WITH LOCATION ID RTF01.
2. COORDONATE PIPING AND EQUIPMENT WITH APPROVED DRAWINGS.
3. COORDONATE PIPINGROUTE FILTER DRAINS TO LIQUID PHASE SEPARATORS SEE DWG M-12-02

NOTES REFERENCED IN DRAWING:

1. DRAIN SLOPES TO SECONDARY CONTAINMENT
2. BLOWDOWN LINE CONNECTS TO TCS WASTEWATER TANK AND IS PUMPED FROM THERE TO EVAPORATION PONDS.
3. AIR TUBING AND CONTROL WIRES TO SOLENOID PANEL 301, TYPICAL FOR ALL PNEUMATIC VALVES.

FRISCH ENGINEERING, INC.
CONSULTING ELECTRICAL ENGINEERS
13405 FOLSOM BLVD, UNIT 600
FOLSOM, CA 95630
PH 916 353 1025
WWW.FRISCHENGINEERING.COM

CH2MHILL®

REVISIONS

NO.	DATE	DESCRIPTION	GM/SPEC	DWN	CHKD	SUPV	APVD BY
1	9/8/14	PRE-FINAL (90%) DESIGN		MBY			TPF
0	4/5/13	INTERMEDIATE (60%) DESIGN		MBY			TPF

APPROVED BY: TPF

SO
SUPV TPF
DSGN MBY
DWN MBY, NC
CHKD MF
OK TPF
DATE
SCALES N/A

TOPOCK GROUNDWATER REMEDIATION PROJECT
P&ID
FILTER SYSTEM A SIDE
GAS TRANSMISSION & DISTRIBUTION
PACIFIC GAS AND ELECTRIC COMPANY
SAN FRANCISCO, CALIFORNIA

DRAFT NOT FOR CONSTRUCTION

MICROFILM
BILL OF MATL
DWG LIST
SUPSDS
SUPSD BY
SHEET NO. of SHEETS
I-12-01
REV 1

PLOT DATE: Aug 27, 2014 PLOT TIME: 12:04:08pm
FILENAME: FE-I-XXX-1201AD.dwg

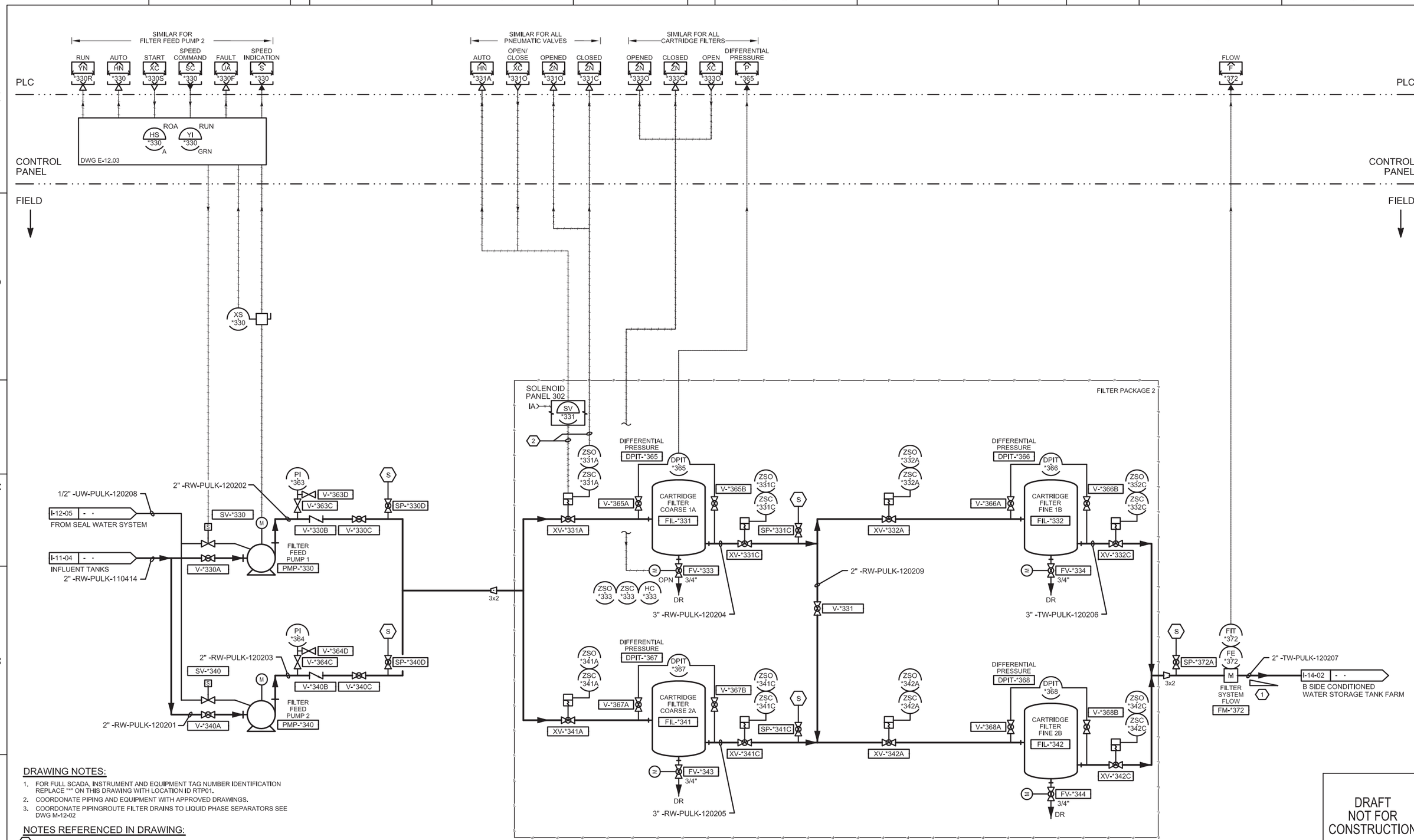

FILTER SYSTEM - B SIDE

DRAWING NOTES:

1. FOR FULL SCADA, INSTRUMENT AND EQUIPMENT TAG NUMBER IDENTIFICATION REPLACE "*" ON THIS DRAWING WITH LOCATION ID RTP01.
2. COORDONATE PIPING AND EQUIPMENT WITH APPROVED DRAWINGS.
3. COORDONATE PIPINGROUTE FILTER DRAINS TO LIQUID PHASE SEPARATORS SEE DWG M-12-02

NOTES REFERENCED IN DRAWING:

1. DRAIN SLOPES TO SECONDARY CONTAINMENT
2. AIR TUBING AND CONTROL WIRES TO SOLENOID PANEL 302, TYPICAL FOR ALL PNEUMATIC VALVES.

DRAFT NOT FOR CONSTRUCTION

FRISCH ENGINEERING, INC.
CONSULTING ELECTRICAL ENGINEERS
13405 FOLSOM BLVD, UNIT 600
FOLSOM, CA 95630
PH 916 353 1025
WWW.FRISCHENGINEERING.COM

CH2MHILL®

NO.	DATE	DESCRIPTION	GM/SPEC	DWN	CHKD	SUPV	APVD BY
1	9/8/14	PRE-FINAL (90%) DESIGN		MBY			TPF
0	4/5/13	INTERMEDIATE (60%) DESIGN		MBY			TPF

REVISIONS

APPROVED BY TPF
SO
SUPV TPF
DSGN MBY
DWN MBY, NC
CHKD MF
OK TPF
DATE
SCALES N/A

TOPOCK GROUNDWATER REMEDIATION PROJECT
P&ID
FILTER SYSTEM B SIDE
GAS TRANSMISSION & DISTRIBUTION
PACIFIC GAS AND ELECTRIC COMPANY
SAN FRANCISCO, CALIFORNIA

MICROFILM
BILL OF MATL
DWG LIST
SUPSDS
SUPSD BY
SHEET NO. of SHEETS
I-12-02
REV 1

FILENAME: FE-I-XXX-1202AD.dwg
PLOT DATE: Aug 27, 2014 PLOT TIME: 12:04:19pm
N1808

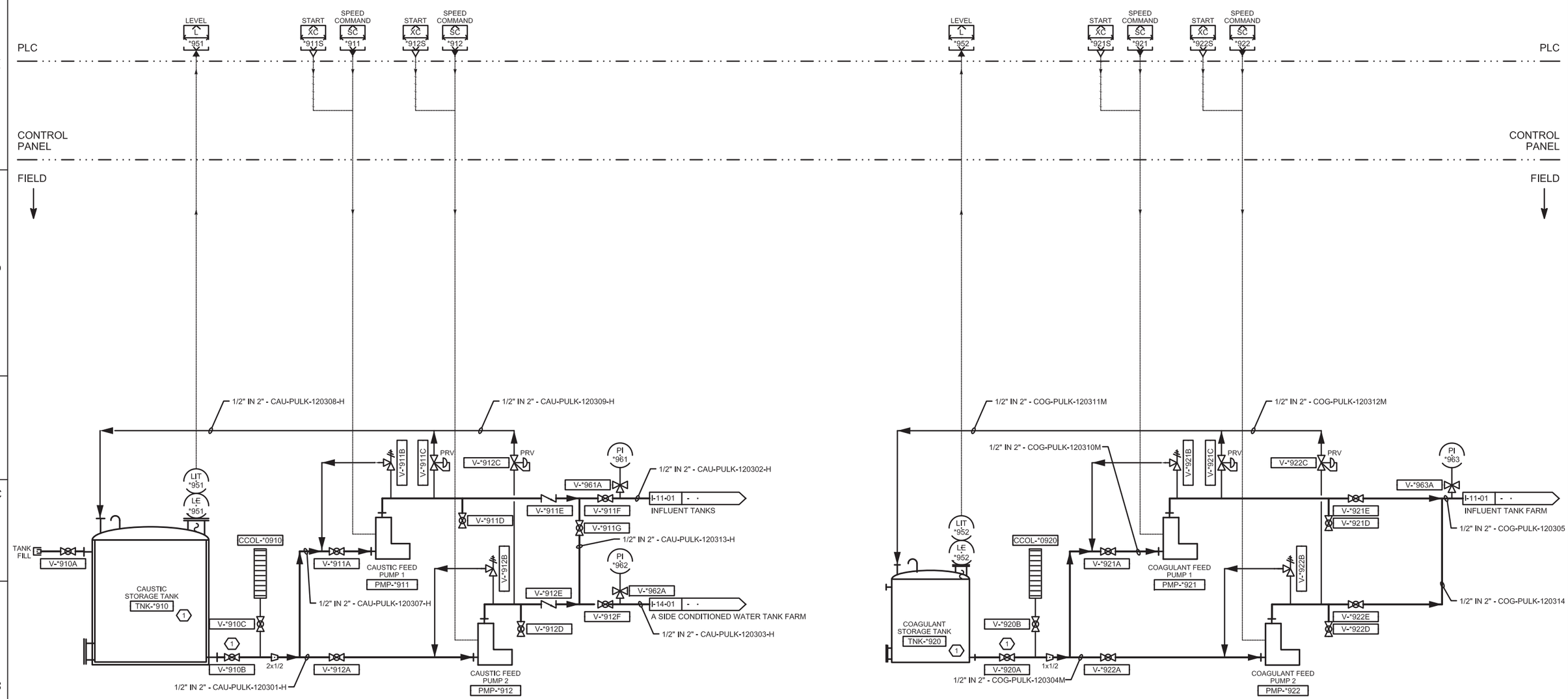

CAUSTIC SYSTEM

COAGULANT SYSTEM

DRAWING NOTES:

1. FOR FULL SCADA, INSTRUMENT AND EQUIPMENT TAG NUMBER IDENTIFICATION REPLACE "*" ON THIS DRAWING WITH LOCATION ID RTP01.

NOTES REFERENCED IN DRAWING:

(1) TANKS AND LINES ARE HEAT TRACED AND DOUBLE-CONTAINED.

DRAFT
NOT FOR
CONSTRUCTION

FRISCH ENGINEERING, INC.
CONSULTING ELECTRICAL ENGINEERS
13405 FOLSOM BLVD, UNIT 600
FOLSOM, CA 95630
PH 916 353 1025
WWW.FRISCHENGINEERING.COM

CH2MHILL®

NO.	DATE	DESCRIPTION	GM/SPEC	DWN	CHKD	SUPV	APVD BY
1	9/8/14	PRE-FINAL (90%) DESIGN		MBY			TPF
0	4/5/13	INTERMEDIATE (60%) DESIGN		MBY			TPF

REVISIONS

APPROVED BY: TPF

SO
SUPV TPF
DSGN MBY
DWN MBY, NC
CHKD MF
OK TPF
DATE
SCALES N/A

TOPOCK GROUNDWATER REMEDIATION PROJECT
P&ID
CAUSTIC AND
COAGULANT SYSTEM
GAS TRANSMISSION & DISTRIBUTION
PACIFIC GAS AND ELECTRIC COMPANY
SAN FRANCISCO, CALIFORNIA

MICROFILM
BILL OF MATL
DWG LIST
SUPSDS
SUPSD BY
SHEET NO. of SHEETS
I-12-03
REV 1

FILENAME: FE-I-XXX-1203AD.dwg
PLOT DATE: Aug 27, 2014 PLOT TIME: 1204:44pm

N1808

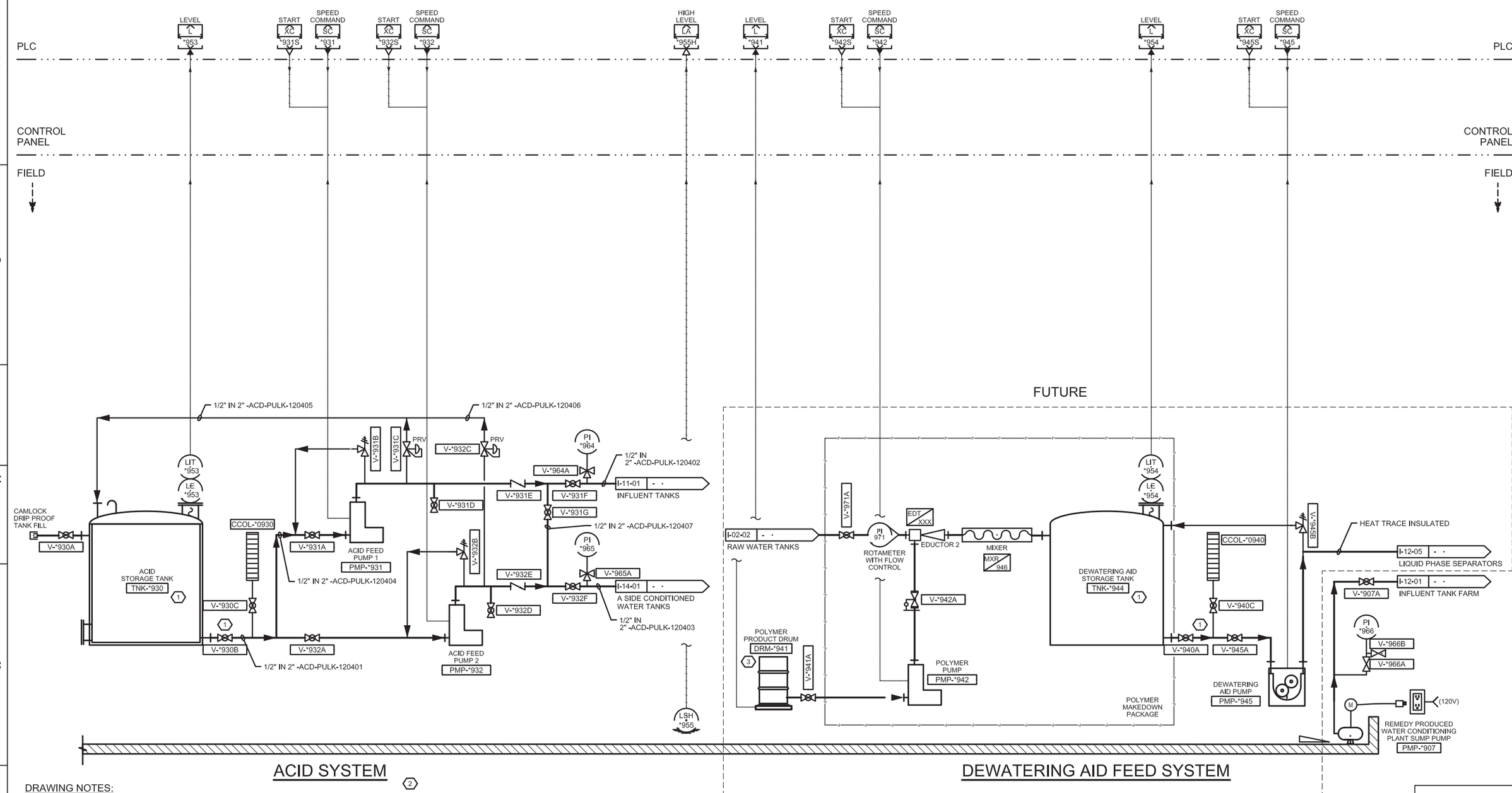

DRAWING NOTES:

1. FOR FULL SCADA, INSTRUMENT AND EQUIPMENT TAG NUMBER IDENTIFICATION REPLACE "*" ON THIS DRAWING WITH LOCATION ID RTP01.

NOTES REFERENCED IN DRAWING:

1. TANKS AND LINES ARE HEAT TRACED AND DOUBLE-CONTAINED.
2. CLEANING & WATER CONDITIONING REAGANT CONTAINERS ARE FUTURE AND NOT SHOWN HERE.
3. INSULATE DRUM AND HEAT TRACE TUBING CONNECTING PUMP ON FEEDER PACKAGE.

DRAFT
NOT FOR
CONSTRUCTION

FRISCH ENGINEERING, INC.
CONSULTING ELECTRICAL ENGINEERS
13405 FOLSOM BLVD, UNIT 600
FOLSOM, CA 95630
PH 916 353 1025
WWW.FRISCHENGINEERING.COM

CH2MHILL®

NO.	DATE	DESCRIPTION	GM/SPEC	DWN	CHKD	SUPV	APVD BY
1	9/8/14	PRE-FINAL (90%) DESIGN		MBY			TPF
0	4/5/13	INTERMEDIATE (60%) DESIGN		MBY			TPF

REVISIONS

APPROVED BY: TPF

SO	
SUPV	TPF
DSGN	MBY
DWN	MBY, NC
CHKD	MF
OK	TPF
DATE	
SCALES	N/A

TOPOCK GROUNDWATER REMEDIATION PROJECT
P&ID
ACID AND DEWATERING AID SYSTEMS
GAS TRANSMISSION & DISTRIBUTION
PACIFIC GAS AND ELECTRIC COMPANY
SAN FRANCISCO, CALIFORNIA

MICROFILM	
BILL OF MATL	
DWG LIST	
SUPSDS	
SUPSD BY	
SHEET NO. of	SHEETS
I-12-04	REV 1

FILENAME: FE-I-XXX-1204AD.dwg
PLOT DATE: Aug 27, 2014 PLOT TIME: 12:04:56pm
N1808

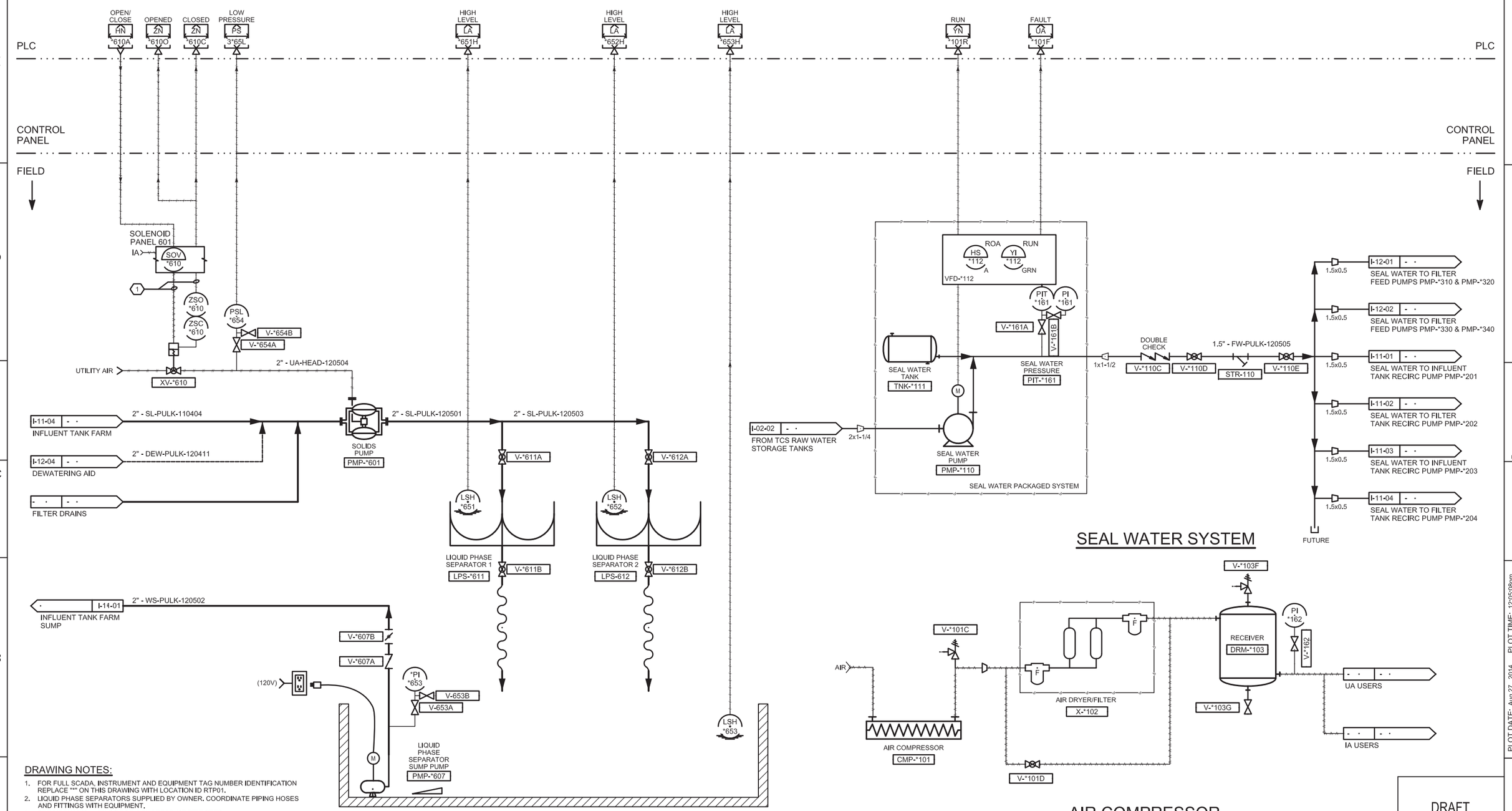

DRAWING NOTES:

1. FOR FULL SCADA, INSTRUMENT AND EQUIPMENT TAG NUMBER IDENTIFICATION REPLACE "*" ON THIS DRAWING WITH LOCATION ID RTP01.
2. LIQUID PHASE SEPARATORS SUPPLIED BY OWNER. COORDINATE PIPING HOSES AND FITTINGS WITH EQUIPMENT.
3. SEE MECHANICAL DWGS FOR COMPRESS AIR PIPE SPEC.

NOTES REFERENCED IN DRAWING:

1. AIR TUBING AND CONTROL WIRES TO SOLENOID PANEL 601, TYPICAL FOR ALL PNEUMATIC VALVES.

DRAFT NOT FOR CONSTRUCTION

FRISCH ENGINEERING, INC.
CONSULTING ELECTRICAL ENGINEERS
13405 FOLSOM BLVD, UNIT 600
FOLSOM, CA 95630
PH 916 353 1025
WWW.FRISCHENGINEERING.COM

CH2MHILL®

NO.	DATE	DESCRIPTION	GM/SPEC	DWN	CHKD	SUPV	APVD BY
1	9/8/14	PRE-FINAL (90%) DESIGN		MBY			TPF
0	4/5/13	INTERMEDIATE (60%) DESIGN		MBY			TPF

REVISIONS

APPROVED BY: TPF

SO
SUPV TPF
DSGN MBY
DWN MBY, NC
CHKD MF
OK TPF
DATE
SCALES N/A

TOPOCK GROUNDWATER REMEDIATION PROJECT
P&ID
LIQUID PHASE SEPARATOR & AIR COMPRESSOR
GAS TRANSMISSION & DISTRIBUTION
PACIFIC GAS AND ELECTRIC COMPANY
SAN FRANCISCO, CALIFORNIA

MICROFILM
BILL OF MATL
DWG LIST
SUPSDS
SUPSD BY
SHEET NO. of SHEETS: I-12-05
REV 1

PLOT TIME: 12:05:08pm
PLOT DATE: Aug 27, 2014
FILENAME: FE-HXXX-1205AD.dwg

N1808