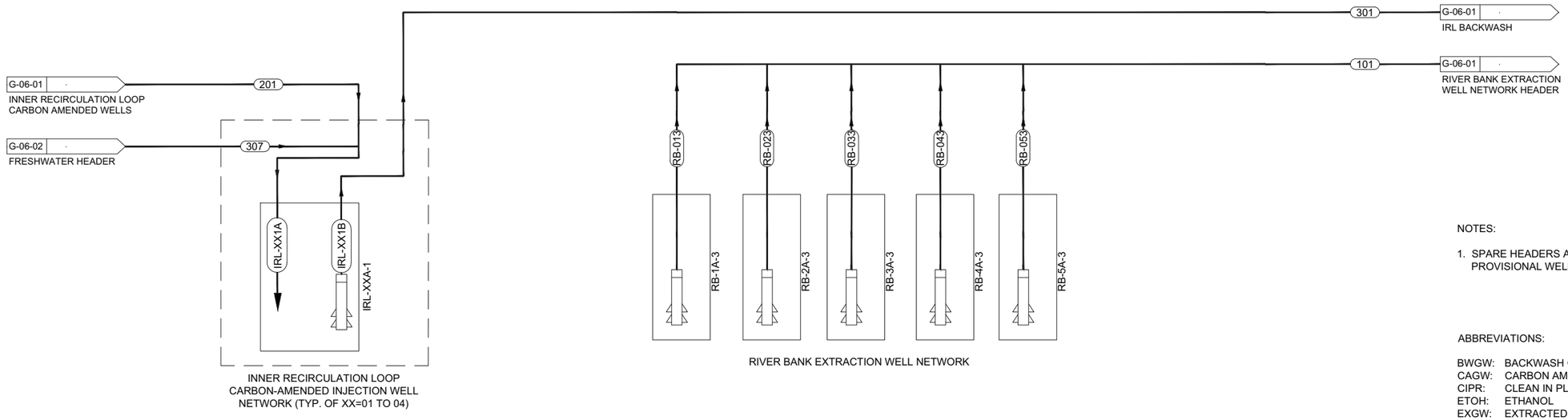

NOTES:

1. SPARE HEADERS AND FUTURE PROVISIONAL WELLS ARE NOT SHOWN.

ABBREVIATIONS:

BWGW:	BACKWASH GROUNDWATER
CAGW:	CARBON AMENDED GROUNDWATER
CIPR:	CLEAN IN PLACE REAGENT
ETOH:	ETHANOL
EXGW:	EXTRACTED GROUNDWATER
FW:	FRESH WATER
GPD:	GALLONS PER DAY
GPM:	GALLONS PER MINUTE
IRL:	INNER RECIRCULATION LOOP
IRZ:	IN-SITU REACTIVE ZONE
lbs/day	POUNDS PER DAY
mg/L:	MILLIGRAMS PER LITER
NTH:	NATIONAL TRAIL HIGHWAY
TOC:	TOTAL ORGANIC CARBON
TW:	TREATED WATER
WMR:	WELL MAINTENANCE REAGENT
µg/L:	MICROGRAMS PER LITER

Design Basis and Mass Balance[a,f]

Stream ID:	101	201	307	301	IRL-011A	IRL-021A	IRL-031A	IRL-041A	RB-013	RB-023	RB-033	RB-043	RB-053	IRL-XX1B
Stream Description:	EXGW	CAGW	FW	BWGW	CAGW/FW	CAGW/FW	CAGW/FW	CAGW/FW	EXGW	EXGW	EXGW	EXGW	EXGW	BWGW[i]
Nominal Design Parameters														
Flow Rate (GPM):	150	150	300	≤400	75	75	100	200	25	0	50	50	25	j
Carbon Substrate[b,c] (GPD):	---	10	---	---	5.2	5.2	6.9	14	---	---	---	---	---	---
TOC[b,c] (mg/L):	---	20	---	---	20	20	20	20	---	---	---	---	---	---
Chromium[d] (µg/L):	10	---	---	---	---	---	---	---	10	10	10	10	10	---
Chromium[d] (lbs/day):	1.8E-02	---	---	---	---	---	---	---	3.0E-03	0.0E+00	6.0E-03	6.0E-03	3.0E-03	---
Maximum Design Parameters														
Flow Rate (GPM):	500[e]	750[g]		≤400	200	200	200	200	170	170	170	170	170	j
Carbon Substrate[b,c] (GPD):	---	104		---	35	35	35	35	---	---	---	---	---	---
TOC[b,c] (mg/L):	---	50		---	50	50	50	50	---	---	---	---	---	---
Chromium[d] (µg/L):	10	---	---	---	---	---	---	---	10	10	10	10	10	---
Chromium[d] (lbs/day):	6.0E-02	---	---	---	---	---	---	---	2.0E-02	2.0E-02	2.0E-02	2.0E-02	2.0E-02	---

Typ. For XX = 01 to 04

a - Values represent target/estimated design parameters for initial operation; system operation may be modified to optimize system performance.
b - Denatured ethanol assumed; instantaneous dosage concentration will not exceed 1-percent by volume.
c - Average flow rate/concentration over time; carbon substrate dosing will be periodic and duration/frequency will vary.
d - Estimated initial concentration.
e - Total maximum River Bank extracted groundwater flow limited to 500 gpm.
f - Nominal design parameters assume River Bank extracted groundwater to be amended with carbon and re-injected at IRL-1 and IRL-2, if chromium concentrations in the river bank extraction wells exceed the cleanup goal then IRL-3 and IRL-4 will receive freshwater. However, IRL injection wells will be constructed preferably to inject either/both freshwater and/or river bank extraction well water.
g - Total maximum IRL injection well flow limited to 750 gpm.
h - Maximum design parameters assume chromium concentrations and general flow distribution similar to minimal design parameters.
i - Single pump operation, in succession.
j - Backwash flow rate equals twice the nominal injection flow rate and twice the maximum injection flow rate.

- DRAFT -
NOT FOR CONSTRUCTION

ARCADIS

NO.	DATE	DESCRIPTION	GM/SPEC	DWN	CHKD	SUPV	APVD	BY
1	09/08/14	PRE-FINAL (90%) DESIGN		KLD	BJW	JPB	JEF	
0	04/05/13	INTERMEDIATE (60%) DESIGN		KLD	BJW	JPB	JEF	

REVISIONS

APPROVED BY: JEF

SO
SUPV JPB
DSGN BJW
DWN KLD
CHKD JPB
OK JEF
DATE 09/08/14
SCALES NONE

TOPOCK GROUNDWATER REMEDIATION PROJECT

INNER RECIRCULATION LOOP PROCESS FLOW DIAGRAM

GAS TRANSMISSION & DISTRIBUTION
PACIFIC GAS AND ELECTRIC COMPANY
SAN FRANCISCO, CALIFORNIA

MICROFILM
BILL OF MATL
DWG LIST
SUPSDS
SUPSD BY
SHEET NO. of SHEETS
G-05-01
REV 1

08/27/2014, 13:17, G:\Graphics\AR\TOPOCK-01\Post 90%\PFD.dwg, Tab: G-05-01

N1808

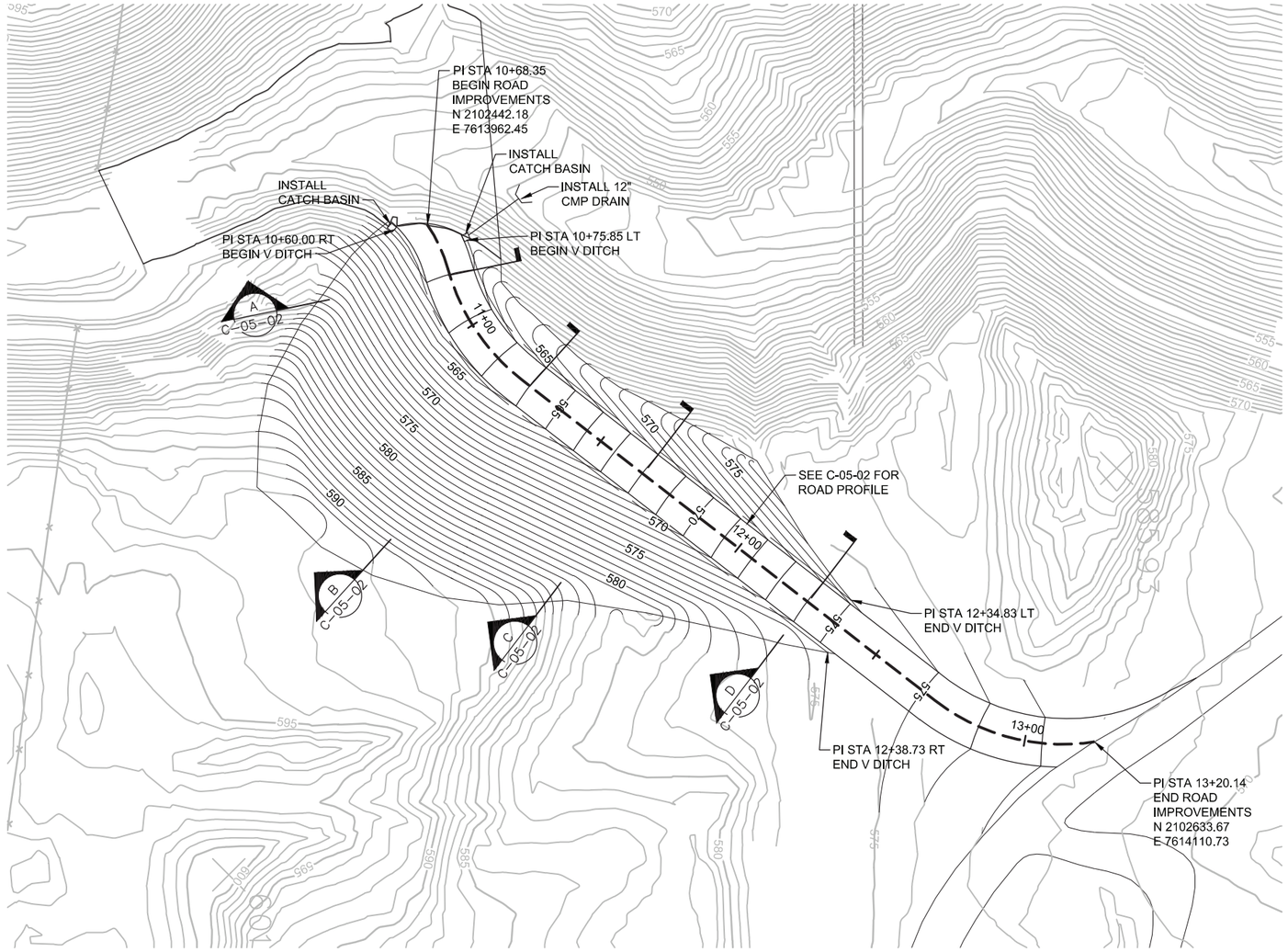

NOTE:

1. REFER TO POINT LINE AND CURVE TABLE ON C-07-25 FOR ROAD COORDINATES AND STATIONING WHICH IS IDENTICAL TO PIPELINE H STATIONING EXCEPT FOR BEGINNING AND ENDING POINTS.

LEGEND

= EDGE OF ROAD
= FLOW LINE

0 20 40 60
HORZ: SCALE: 1"=20

DRAFT
NOT FOR
CONSTRUCTION

E2 Consulting Engineers, Inc.
1900 Powell Street, Ste. 250
Emeryville, CA 94608
(510) 652-1164

CH2MHILL.

NO.	DATE	DESCRIPTION	GM/SPEC	DWN	CHKD	SUPV	APVD BY
1	9/8/14	PRE-FINAL (90%) DESIGN		WTH	PT	VMB	VMB
0	4/5/13	INTERMEDIATE (60%) DESIGN		PC	PT	VMB	VMB

REVISIONS

APPROVED BY
SO
SUPV VMB
DSGN PT
DWN PC
CHKD PT
OK VMB
DATE 09/08/14
SCALES 1" =20

TOPOCK GROUNDWATER REMEDIATION PROJECT

IRL-4 ACCESS ROAD SITE PLAN

GAS TRANSMISSION & DISTRIBUTION
PACIFIC GAS AND ELECTRIC COMPANY
SAN FRANCISCO, CALIFORNIA

MICROFILM
BILL OF MATL
DWG LIST
SUPSDS
SUPSD BY
SHEET NO. of SHEETS
C-05-01
REV 1

N180B

C:\Users\peter.hubbard\CAD\Topock\E2-C-XXX-0501.dwg, 11X17, 9/3/2014 1:11:19 PM

PLOT DATE: PLOTDATE PLOT TIME: PLOTTIME

FILENAME: E2-C-XXX-0502AD.DWG

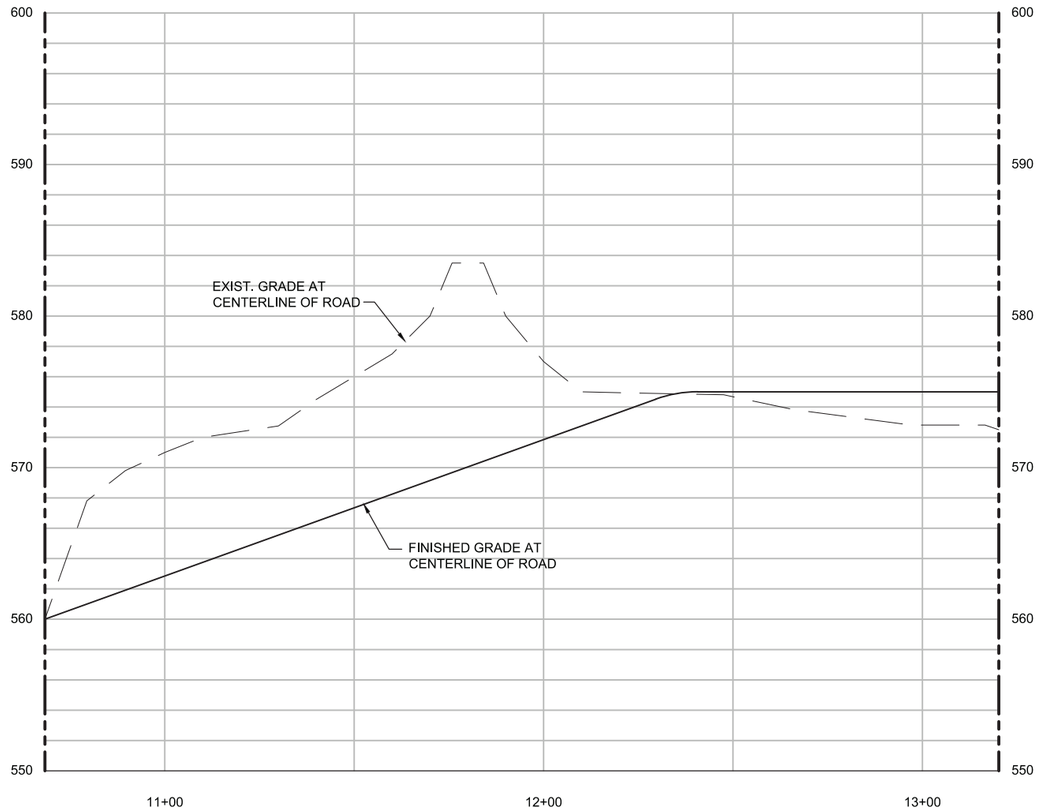

IRL-4 ACCESS ROAD

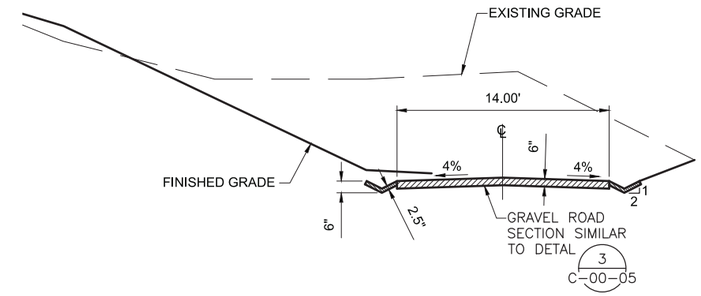

A SECTION
1" = 5'-0"
C-05-01

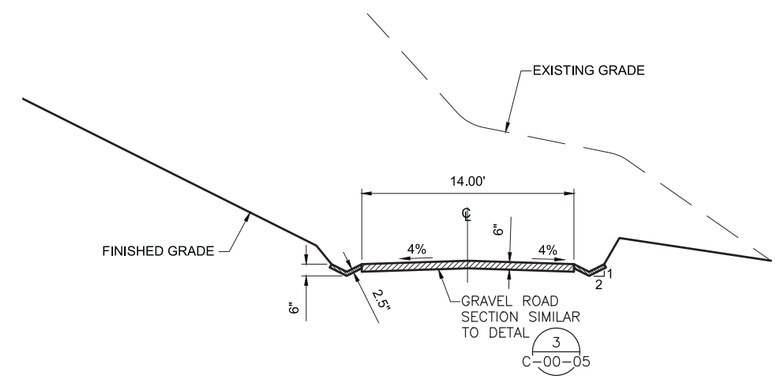

B SECTION
1" = 5'-0"
C-05-01

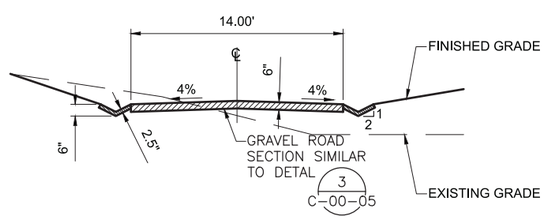

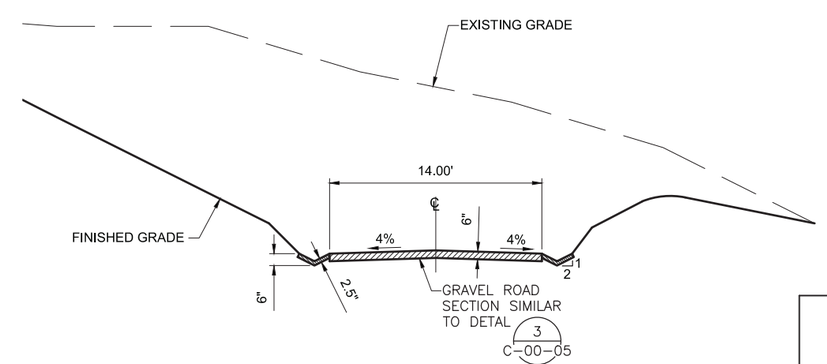

0 40 80 160
HORZ SCALE: 1"=40'

0 10 20 30
VERT SCALE: 1" = 10'

D SECTION
1" = 5'-0"
C-05-01

C SECTION
1" = 5'-0"
C-05-01

DRAFT
NOT FOR
CONSTRUCTION

E2 Consulting Engineers, Inc.
1900 Powell Street, Ste. 250
Emeryville, CA 94608
(510) 652-1164

CH2MHILL.

NO.	DATE	DESCRIPTION	GM/SPEC	DWN	CHKD	SUPV	APVD BY
1	9/8/14	PRE-FINAL (90%) DESIGN		WTH	PT	VMB	VMB
0	4/5/13	INTERMEDIATE (60%) DESIGN		PC	PT	VMB	VMB

REVISIONS

APPROVED BY
SO
SUPV VMB
DSGN PT
DWN PC
CHKD PT
OK VMB
DATE 09/08/14
SCALES 1" =20'

TOPOCK GROUNDWATER REMEDIATION PROJECT

IRL-4 ACCESS ROAD - SECTIONS

GAS TRANSMISSION & DISTRIBUTION
PACIFIC GAS AND ELECTRIC COMPANY
SAN FRANCISCO, CALIFORNIA

MICROFILM
BILL OF MATL
DWG LIST
SUPSDS
SUPSD BY
SHEET NO. of SHEETS
C-05-02
REV 1

FILENAME: E2-C-XXX-0502AD.DWG
PLOT DATE: $PLOTDATE PLOT TIME: $PLOTTIME
N1808

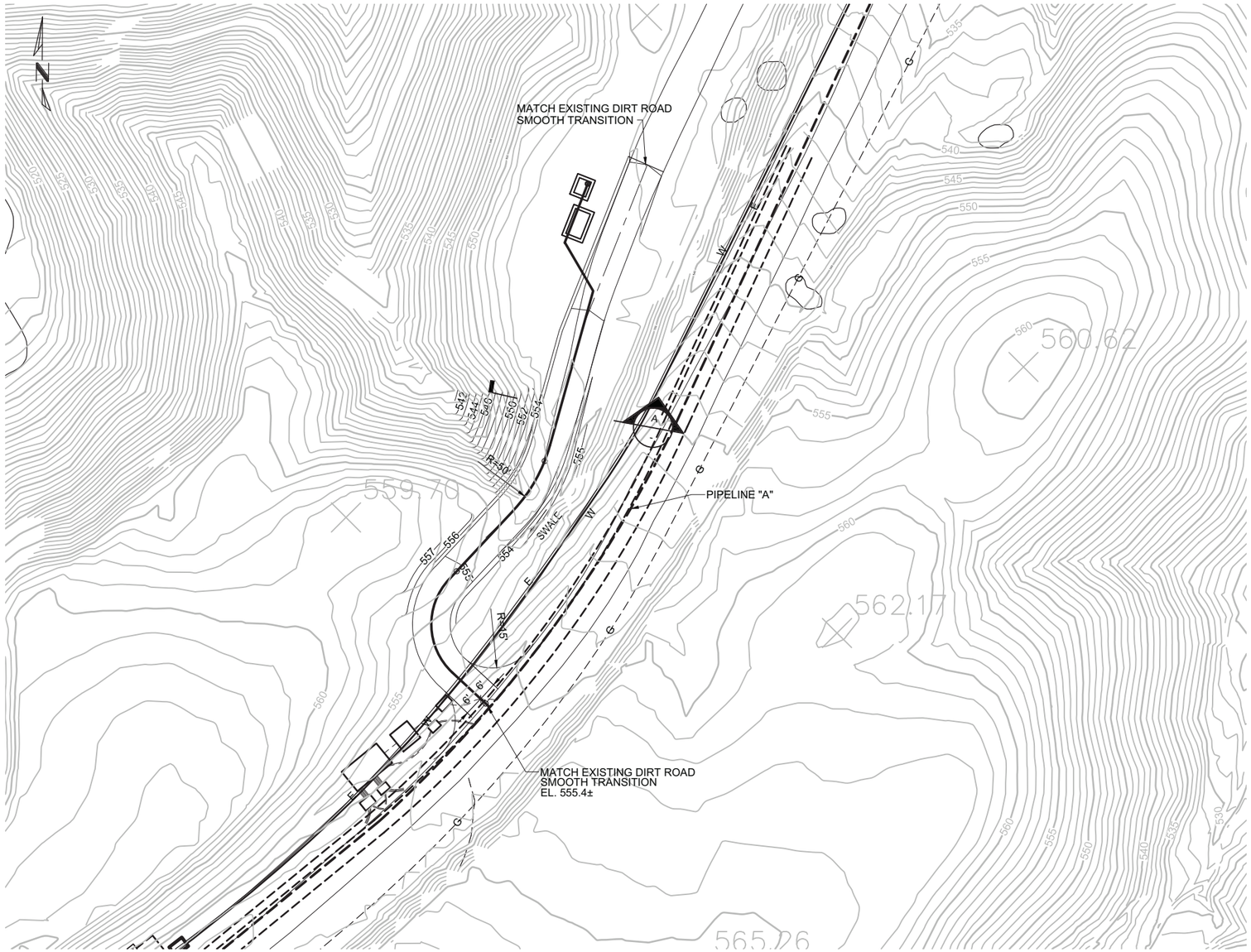

IRL-2 ACCESS ROAD - SITE PLAN

1" = 20'

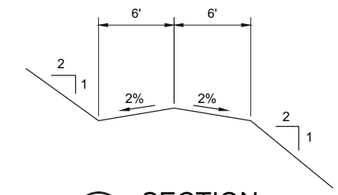

A SECTION
NTS

0 20 40 60
SCALE: 1"=20'

DRAFT
NOT FOR
CONSTRUCTION

E2 Consulting Engineers, Inc.
1900 Powell Street, Ste. 250
Emeryville, CA 94608
(510) 652-1164

CH2MHILL.

NO.	DATE	DESCRIPTION	GM/SPEC	DWN	CHKD	SUPV	APVD BY
1	9/8/14	PRE-FINAL (90%) DESIGN		PH	PT	VMB	VMB
0	4/5/13	INTERMEDIATE (60%) DESIGN		PC	PT	VMB	VMB

REVISIONS

APPROVED BY
SO
SUPV VMB
DSGN PT
DWN PH
CHKD VMB
OK VMB
DATE 09/08/14
SCALES 1" =20'

TOPOCK GROUNDWATER REMEDIATION PROJECT
IRL-2 ACCESS ROAD
PLAN AND SECTION

GAS TRANSMISSION & DISTRIBUTION
PACIFIC GAS AND ELECTRIC COMPANY
SAN FRANCISCO, CALIFORNIA

MICROFILM
BILL OF MATL
DWG LIST
SUPSDS
SUPSD BY
SHEET NO. of SHEETS
C-05-03
REV 1

FILENAME: E2-C-XXX-0503AD.DWG
PLOT DATE: $PLOTDATE PLOT TIME: $PLOTTIME

N1B08
C:\Users\peter.hubbard\CAD\Topock\E2-C-XXX-0503.DWG, 22X34, 8/20/2014 2:39:00 PM

NOTES:

1. FOR INJECTION WELL AND METER VAULT STRUCTURAL DETAILS, SEE DWGS. S-05-01 THROUGH S-05-05.
2. FOR WELL, METER AND VALVE VAULT MECHANICAL DETAILS, SEE DWGS. M-05-05 AND M-05-06.

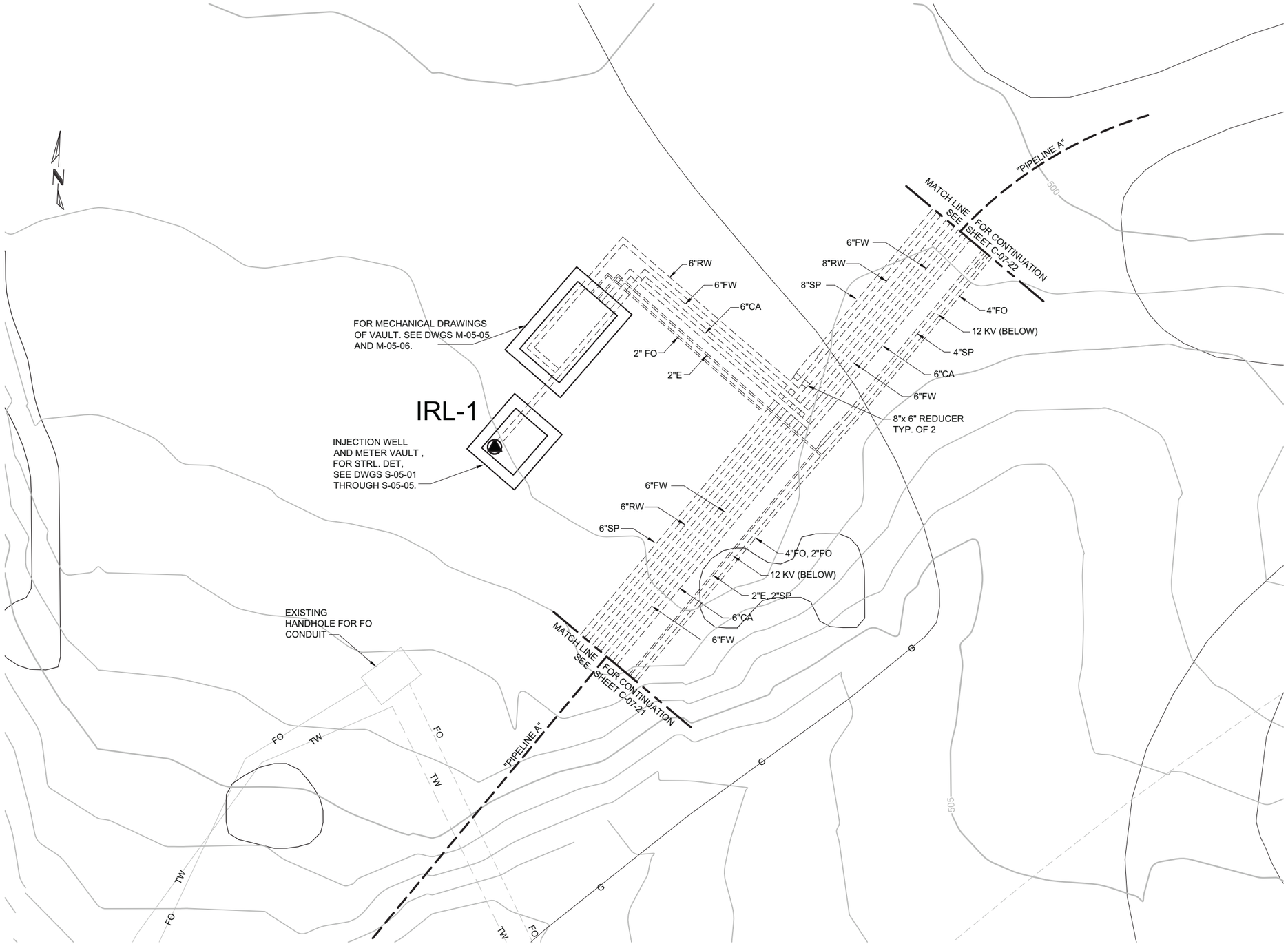

IRL-1 WELL, METER AND VALVE VAULT SITE PLAN

1" = 5'

0 5 10 15

SCALE: 1"=5'

DRAFT NOT FOR CONSTRUCTION

E2 Consulting Engineers, Inc.
1900 Powell Street, Ste. 250
Emeryville, CA 94608
(510) 652-1164

CH2MHILL.

NO.	DATE	DESCRIPTION	GM/SPEC	DWN	CHKD	SUPV	APVD BY
1	9/8/14	PRE-FINAL (90%) DESIGN		PH	PT	VMB	VMB
0	4/5/13	INTERMEDIATE (60%) DESIGN		PC	PT	VMB	VMB

REVISIONS

APPROVED BY: SO
SUPV VMB
DSGN PT
DWN PH
CHKD VMB
OK VMB
DATE 09/08/14
SCALES 1" =5'-0"

TOPOCK GROUNDWATER REMEDIATION PROJECT
INNER RECIRCULATION LOOP
INJECTION WELL IRL-1
SITE PLAN
GAS TRANSMISSION & DISTRIBUTION
PACIFIC GAS AND ELECTRIC COMPANY
SAN FRANCISCO, CALIFORNIA

MICROFILM
BILL OF MATL
DWG LIST
SUPSDS
SUPSD BY
SHEET NO. C-05-04 of SHEETS
REV 1

FILENAME: E2-C-XXX-0504AD.DWG
PLOT DATE: $PLOTDATE PLOT TIME: $PLOTTIME

N180B

C:\Users\peter.hubbard\CAD\Topock\E2-C-XXX-0504.DWG, 22X34, 8/20/2014 2:46:24 PM

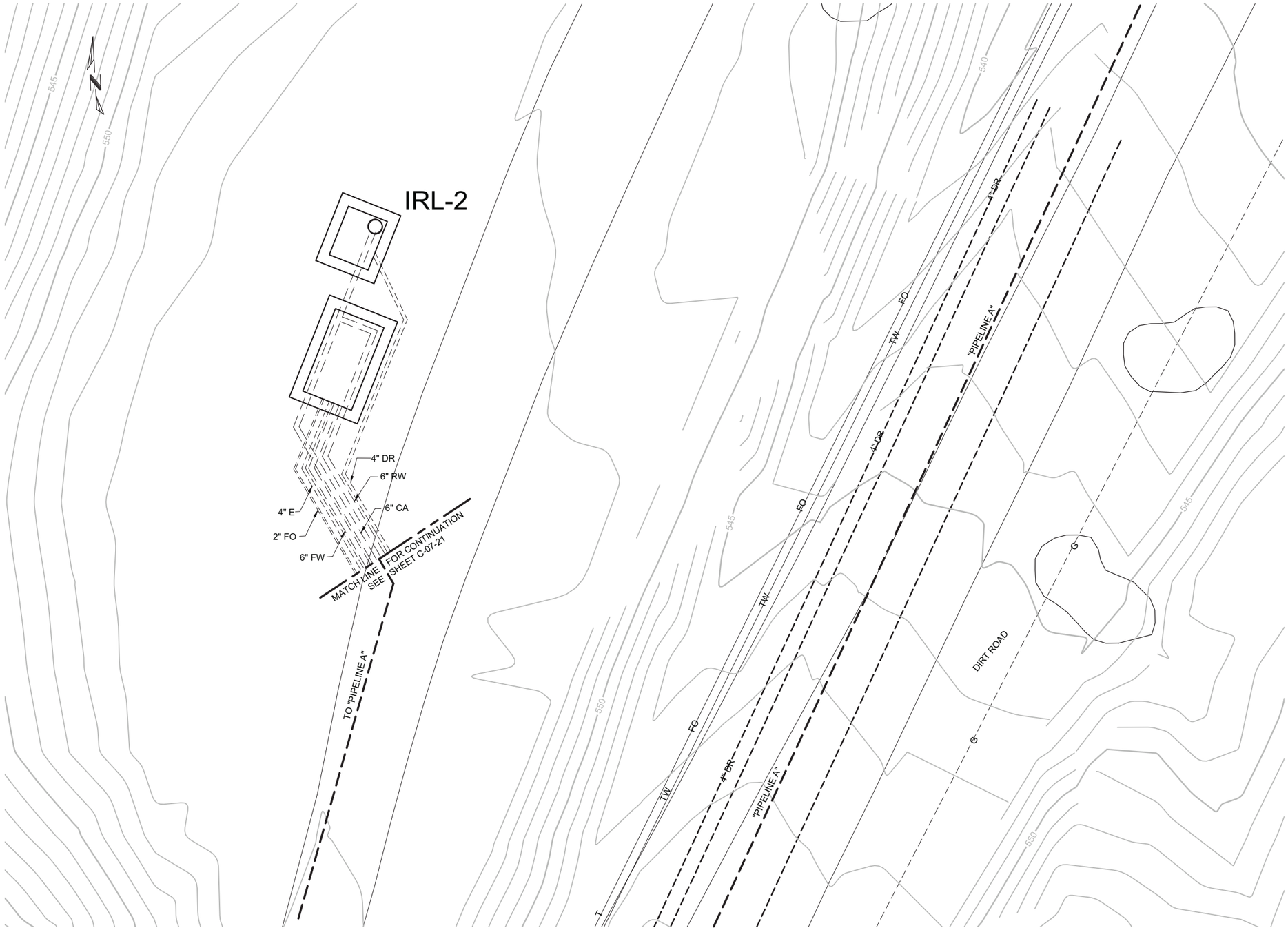

NOTES:

1. FOR INJECTION WELL AND METER VAULT STRUCTURAL DETAILS, SEE DWGS. S-05-01 THROUGH S-05-05.
2. FOR WELL, METER AND VALVE VAULT MECHANICAL DETAILS, SEE DWGS. M-05-05 AND M-05-06.

IRL-2 WELL, METER AND VALVE VAULT SITE PLAN

1" = 5'

0 5 10 15

SCALE: 1"=5'

DRAFT NOT FOR CONSTRUCTION

E2 Consulting Engineers, Inc.
1900 Powell Street, Ste. 250
Emeryville, CA 94608
(510) 652-1164

CH2MHILL.

NO.	DATE	DESCRIPTION	GM/SPEC	DWN	CHKD	SUPV	APVD BY
1	9/8/14	PRE-FINAL (90%) DESIGN		PH	PT	VMB	VMB
0	4/5/13	INTERMEDIATE (60%) DESIGN		PC	PT	VMB	VMB

REVISIONS

APPROVED BY
SO
SUPV VMB
DSGN PT
DWN PH
CHKD VMB
OK VMB
DATE 09/08/14
SCALES 1" =5'-0"

TOPOCK GROUNDWATER REMEDIATION PROJECT
INNER RECIRCULATION LOOP
INJECTION WELL IRL-2
SITE PLAN
GAS TRANSMISSION & DISTRIBUTION
PACIFIC GAS AND ELECTRIC COMPANY
SAN FRANCISCO, CALIFORNIA

MICROFILM
BILL OF MATL
DWG LIST
SUPSDS
SUPSD BY
SHEET NO. of SHEETS
C-05-05
REV 1

FILENAME: E2-C-XXX-0505AD.DWG
PLOT DATE: $PLOTDATE PLOT TIME: $PLOTTIME

N1808

C:\Users\peter.hubbard\CAD\Topock\E2-C-XXX-0505.DWG, 22X34, 8/20/2014 2:49:51 PM

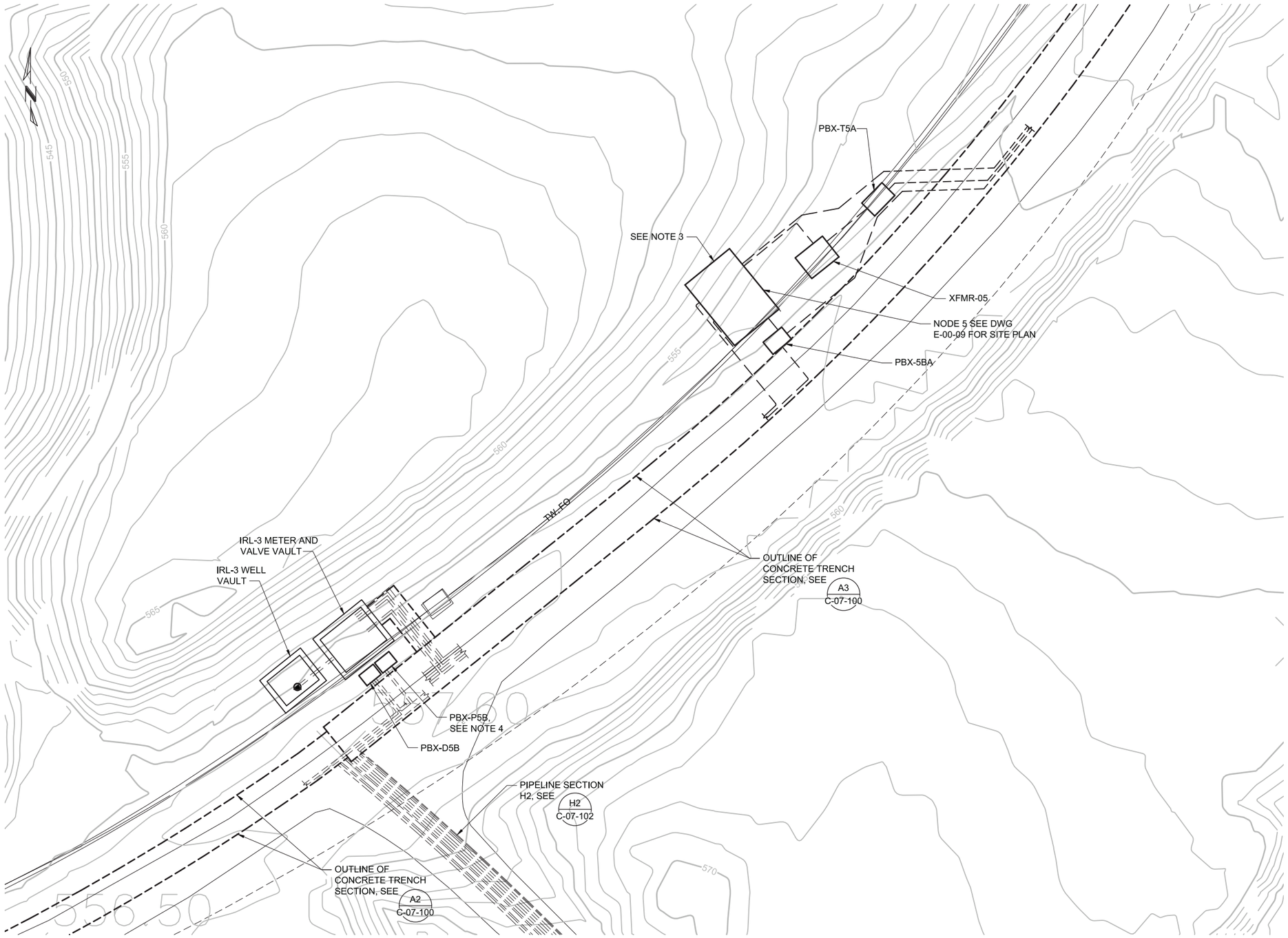

IRL-3 WELL, METER AND VALVE VAULT SITE PLAN

1" = 5'

NOTES:

1. FOR IRL-3 WELL AND METER VAULT STRUCTURAL DETAILS, SEE DWGS. S-05-01 THROUGH S-05-05.
2. FOR WELL, METER AND VALVE VAULT MECHANICAL DETAILS, SEE DWGS. M-05-05 AND M-05-06.
3. PG&E IS STILL EVALUATING OPTIONS TO OPTIMIZE THE NODE 5 FOOTPRINT.
4. SEE E-05-03 FOR ELECTRICAL SITE PLAN AT IRL-3.

0 10 20 30

SCALE: 1" = 10'

DRAFT
NOT FOR
CONSTRUCTION

E2 Consulting Engineers, Inc.
1900 Powell Street, Ste. 250
Emeryville, CA 94608
(510) 652-1164

CH2MHILL.

NO.	DATE	DESCRIPTION	GM/SPEC	DWN	CHKD	SUPV	APVD BY
1	9/8/14	PRE-FINAL (90%) DESIGN		PH	PT	VMB	VMB
0	4/5/13	INTERMEDIATE (60%) DESIGN		PC	PT	VMB	VMB

REVISIONS

APPROVED BY	
SO	
SUPV	VMB
DSGN	PT
DWN	PH
CHKD	VMB
OK	VMB
DATE	09/08/14
SCALES	1" =5'-0"

TOPOCK GROUNDWATER REMEDIATION PROJECT
INNER RECIRCULATION LOOP
INJECTION WELL IRL-3
SITE PLAN
GAS TRANSMISSION & DISTRIBUTION
PACIFIC GAS AND ELECTRIC COMPANY
SAN FRANCISCO, CALIFORNIA

MICROFILM	
BILL OF MATL	
DWG LIST	
SUPSDS	
SUPSD BY	
SHEET NO. of SHEETS	
C-05-06	REV 1

PLOT DATE: $PLOTDATE PLOT TIME: $PLOTTIME

FILENAME: E2-C-XXX-0506AD.DWG

C:\Users\peter.hubbard\CAD\Topock\E2-C-XXX-0506.DWG, 22X34, 9/5/2014 2:19:25 PM

N1808

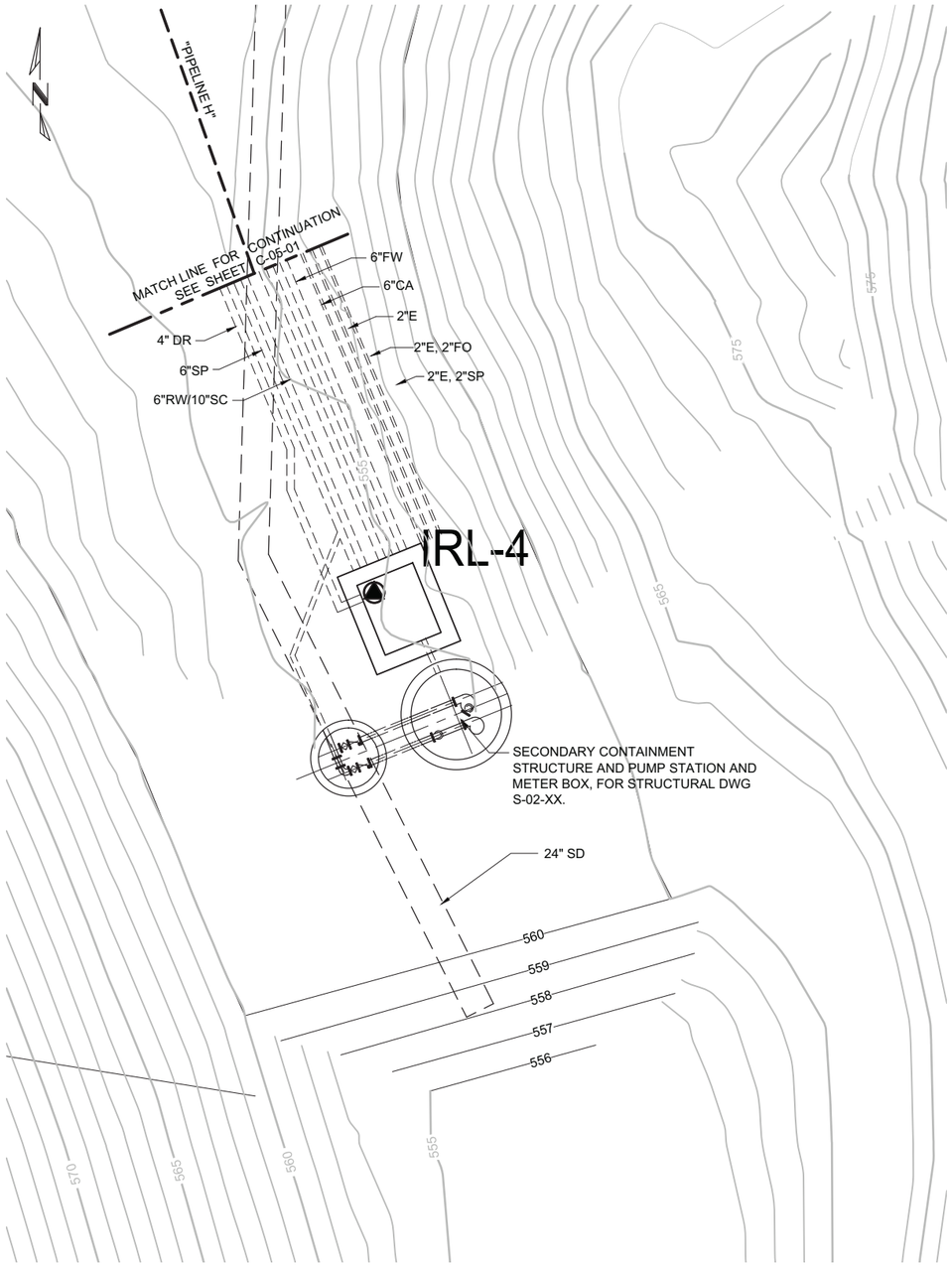

IRL-4 WELL VAULT SITE PLAN

1" = 5'

NOTES:

1. FOR INJECTION WELL AND METER VAULT STRUCTURAL DETAILS, SEE DWGS. S-05-01 THROUGH S-05-05.
2. FOR WELL, METER AND VALVE VAULT MECHANICAL DETAILS, SEE DWGS. M-05-05 AND M-05-06.

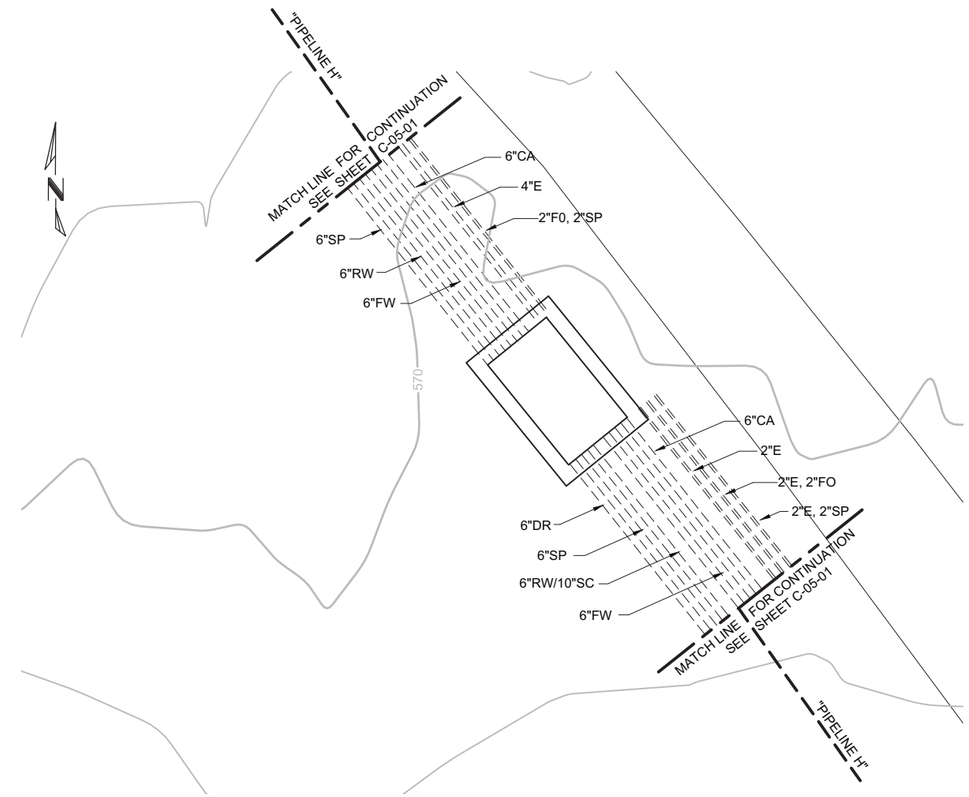

IRL-4 METER AND VALVE VAULT SITE PLAN

1" = 5'

0 5 10 15

SCALE: 1"=5'

DRAFT
NOT FOR
CONSTRUCTION

E2 Consulting Engineers, Inc.
1900 Powell Street, Ste. 250
Emeryville, CA 94608
(510) 652-1164

CH2MHILL.

NO.	DATE	DESCRIPTION	GM/SPEC	DWN	CHKD	SUPV	APVD BY
1	9/8/14	PRE-FINAL (90%) DESIGN		PH	PT	VMB	VMB
0	4/5/13	INTERMEDIATE (60%) DESIGN		PC	PT	VMB	VMB

REVISIONS

APPROVED BY: SO
SUPV VMB
DSGN PT
DWN PC
CHKD VMB
OK VMB
DATE 09/08/14
SCALES 1" =5'-0"

TOPOCK GROUNDWATER REMEDIATION PROJECT
INNER RECIRCULATION LOOP
INJECTION WELL IRL-4
SITE PLAN
GAS TRANSMISSION & DISTRIBUTION
PACIFIC GAS AND ELECTRIC COMPANY
SAN FRANCISCO, CALIFORNIA

MICROFILM
BILL OF MATL
DWG LIST
SUPSDS
SUPSD BY
SHEET NO. C-05-07 of SHEETS
REV 1

FILENAME: E2-C-XXX-0507AD.DWG
PLOT DATE: $PLOTDATE PLOT TIME: $PLOTTIME

C:\Users\peter.hubbard\CAD\Topock\E2-C-XXX-0507.DWG, 22X34, 8/20/2014 3:40:54 PM

N1808

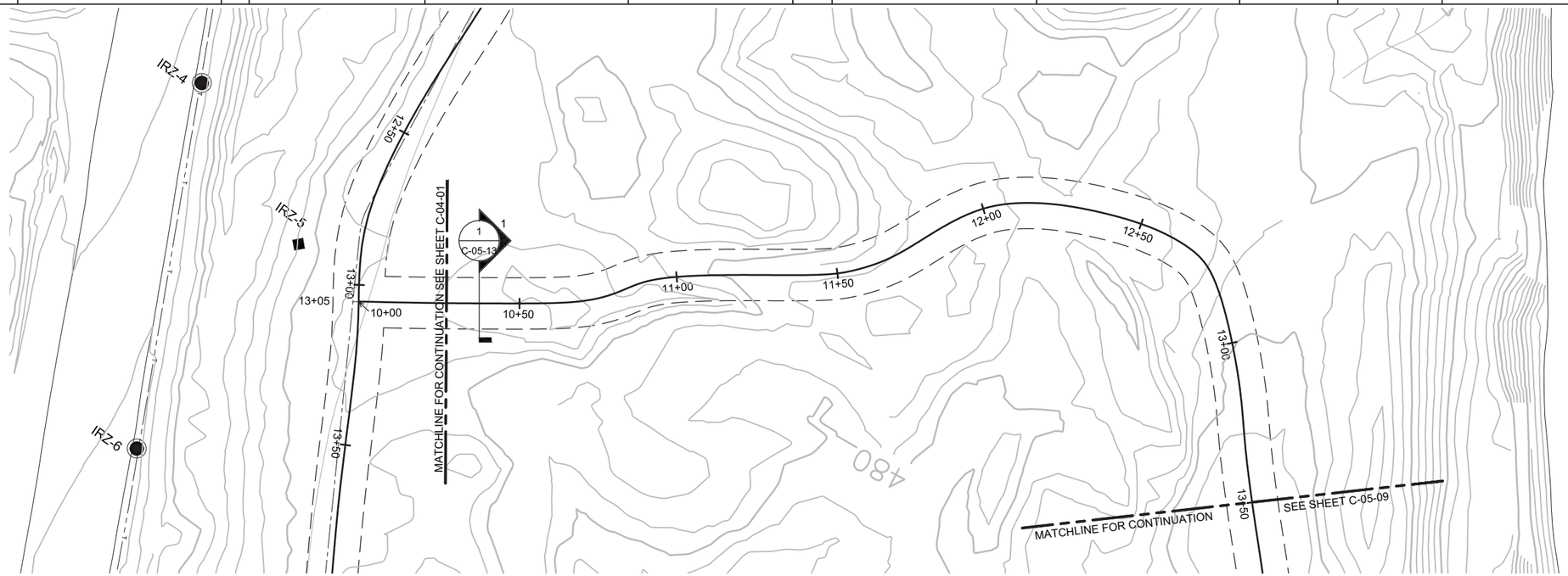

1 TYPICAL ACCESS ROAD CONSTRUCTION DETAIL CROSS SECTION SHOWN ON SHEET C-05-13.

ACCESS ROAD - PLAN

(SCALE: 1" = 20')

0 20 40 60
HORIZ: SCALE: 1"=20'

0 10 20 30
VERT: SCALE: 1"=10'

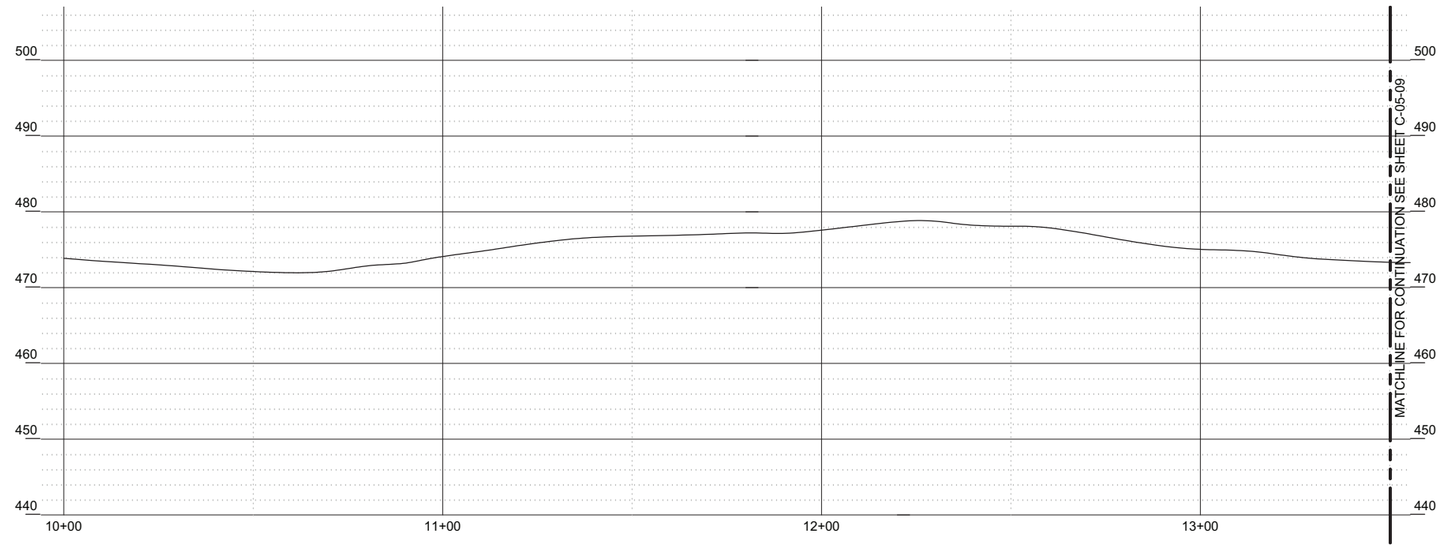

ACCESS ROAD - PROFILE

(SCALE: 1" = 20' H; 1" = 10' V)

- DRAFT -
NOT FOR
CONSTRUCTION

ETIC ENGINEERING

ARCADIS

NO.	DATE	DESCRIPTION	GM/SPEC	DWN	CHKD	SUPV	APVD BY
1	09/08/14	PRE-FINAL (90%) DESIGN		AJW	BAS	JPB	JEF
0	04/05/13	INTERMEDIATE (60%) DESIGN		AJW	KLD	JPB	JEF

REVISIONS

APPROVED BY: JEF

SO	
SUPV	JPB
DSGN	BAS
DWN	AJW
CHKD	JPB
OK	JEF
DATE	09/08/14
SCALES	1" = 20'

TOPOCK GROUNDWATER REMEDIATION PROJECT

ACCESS ROAD-
PLAN AND PROFILE - PIPELINE "G"
STA 10+00 TO STA 13+50

GAS TRANSMISSION & DISTRIBUTION
PACIFIC GAS AND ELECTRIC COMPANY
SAN FRANCISCO, CALIFORNIA

MICROFILM
BILL OF MATL
DWG LIST
SUPSDS
SUPSD BY
SHEET NO. of SHEETS
C-05-08 REV 1

N1808

08/27/2014, 13:50, G:\Graphics\ARITOPOCK-01\Post 90%\C-04-01 to 11_C-05-08 to 13AccessRoad.dwg, Tab: C-05-08-

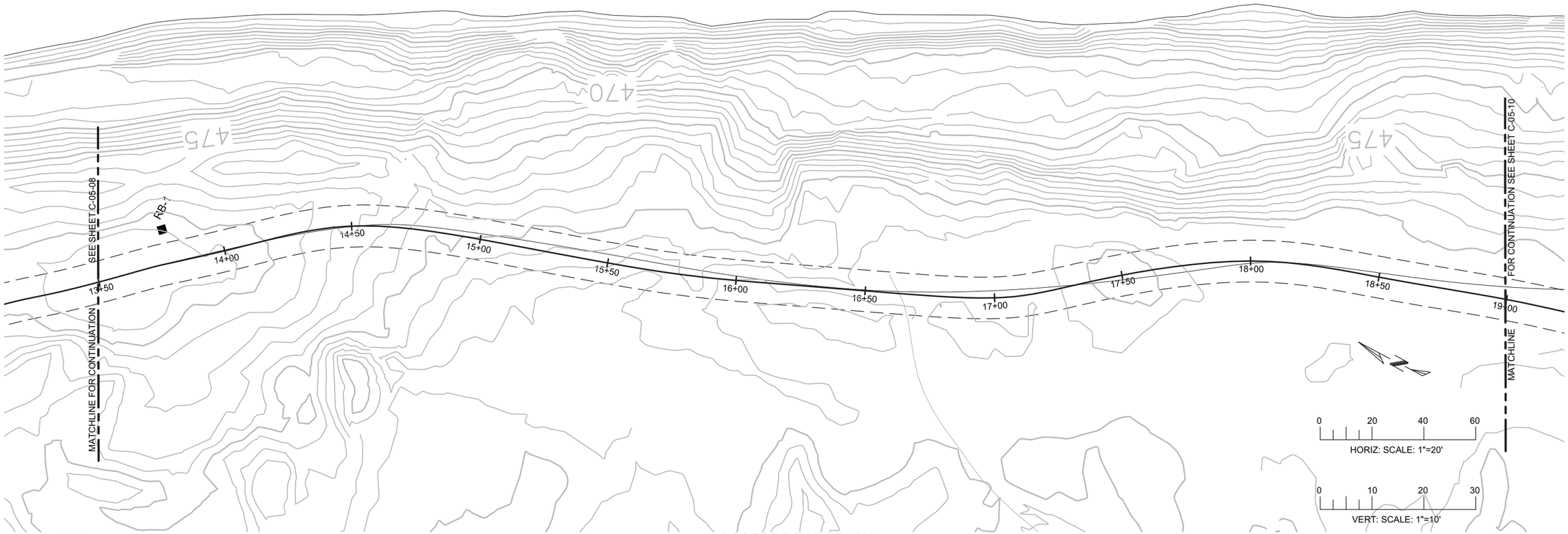

NOTE:
TYPICAL ACCESS ROAD CONSTRUCTION DETAIL
CROSS SECTION SHOWN ON SHEET C-05-13.

ACCESS ROAD - PLAN

(SCALE: 1" = 20')

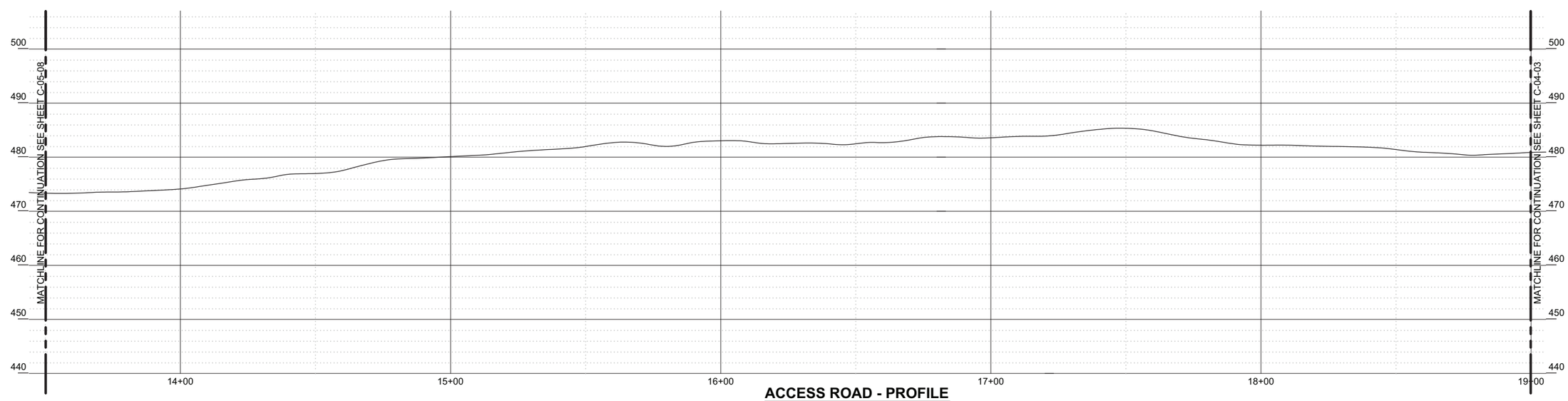

ACCESS ROAD - PROFILE

(SCALE: 1" = 20' H; 1" = 10' V)

- DRAFT -
NOT FOR
CONSTRUCTION

ETIC ENGINEERING

ARCADIS

NO.	DATE	DESCRIPTION	GM/SPEC	DWN	CHKD	SUPV	APVD BY
1	09/08/14	PRE-FINAL (90%) DESIGN	AJW	BAS	JPB	JEF	
0	04/05/13	INTERMEDIATE (60%) DESIGN	AJW	KLD	JPB	JEF	

REVISIONS

APPROVED BY: JEF

SO
SUPV JPB
DSGN BAS
DWN AJW
CHKD JPB
OK JEF
DATE 09/08/14
SCALES 1" = 20'

TOPOCK GROUNDWATER REMEDIATION PROJECT

ACCESS ROAD- PLAN AND PROFILE - PIPELINE "G" STA 13+50 TO STA 19+00

GAS TRANSMISSION & DISTRIBUTION
PACIFIC GAS AND ELECTRIC COMPANY
SAN FRANCISCO, CALIFORNIA

MICROFILM
BILL OF MATL
DWG LIST
SUPSDS
SUPSD BY
SHEET NO. of SHEETS
C-05-09
REV 1

09/27/2014, 13:50, G:\Graphics\ARI\TOPOCK-01\Post 90%\C-04-01 to 11_C-05-08 to 13AccessRoad.dwg, Tab: 09-

N1808

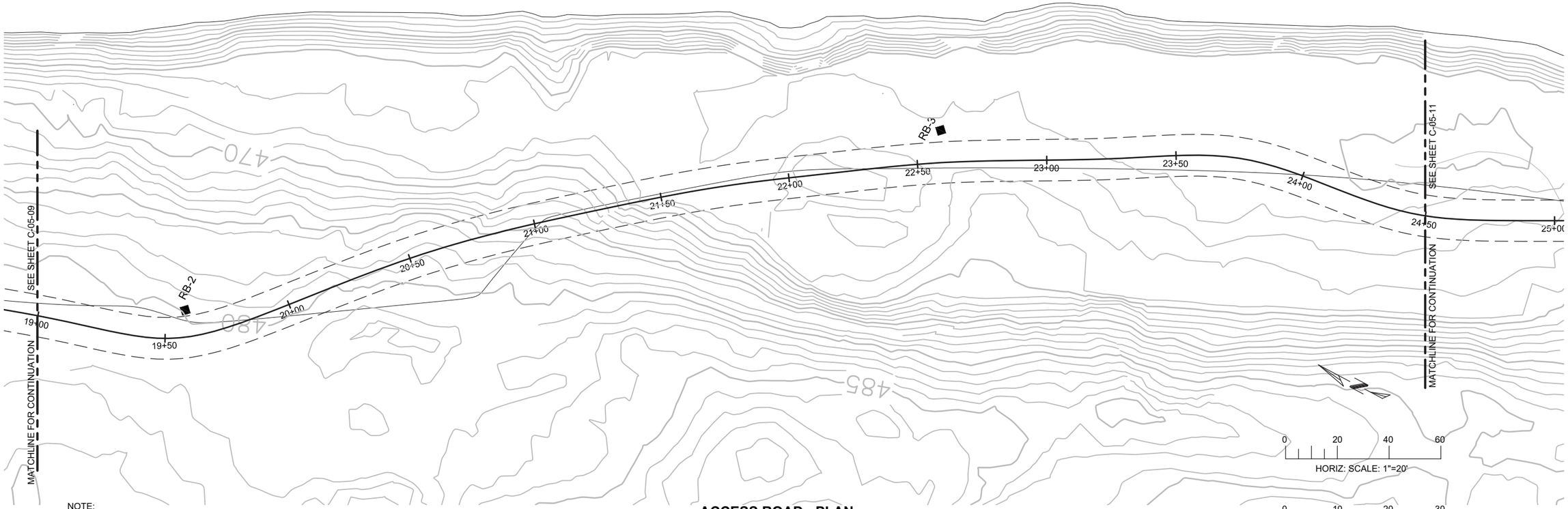

NOTE:
TYPICAL ACCESS ROAD CONSTRUCTION DETAIL
CROSS SECTION SHOWN ON SHEET C-05-13.

ACCESS ROAD - PLAN

(SCALE: 1" = 20')

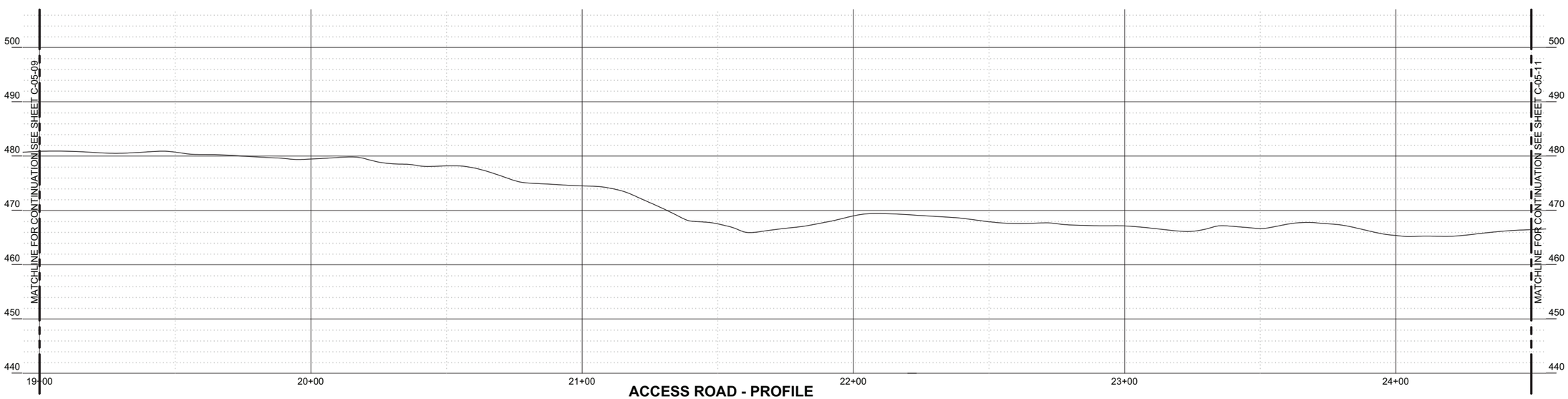

ACCESS ROAD - PROFILE

(SCALE: 1" = 20' H; 1" = 10' V)

- DRAFT -
NOT FOR
CONSTRUCTION

ETIC ENGINEERING

ARCADIS

NO.	DATE	DESCRIPTION	GM/SPEC	DWN	CHKD	SUPV	APVD BY
1	09/08/14	PRE-FINAL (90%) DESIGN		AJW	BAS	JPB	JEF
0	04/05/13	INTERMEDIATE (60%) DESIGN		AJW	KLD	JPB	JEF

REVISIONS

APPROVED BY: JEF

SO	
SUPV	JPB
DSGN	BAS
DWN	AJW
CHKD	JPB
OK	JEF
DATE	09/08/14
SCALES	1" = 20'

TOPOCK GROUNDWATER REMEDIATION PROJECT

ACCESS ROAD-
PLAN AND PROFILE - PIPELINE "G"
STA 19+00 TO STA 24+50

GAS TRANSMISSION & DISTRIBUTION
PACIFIC GAS AND ELECTRIC COMPANY
SAN FRANCISCO, CALIFORNIA

MICROFILM
BILL OF MATL
DWG LIST
SUPSDS
SUPSD BY
SHEET NO. of SHEETS
C-05-10 REV 1

N1808

08/27/2014, 13:50, G:\Graphics\ARI\TOPOCK-01\Post 90%\C-04-01 to 11_C-05-08 to 13AccessRoad.dwg, Tab: 10-

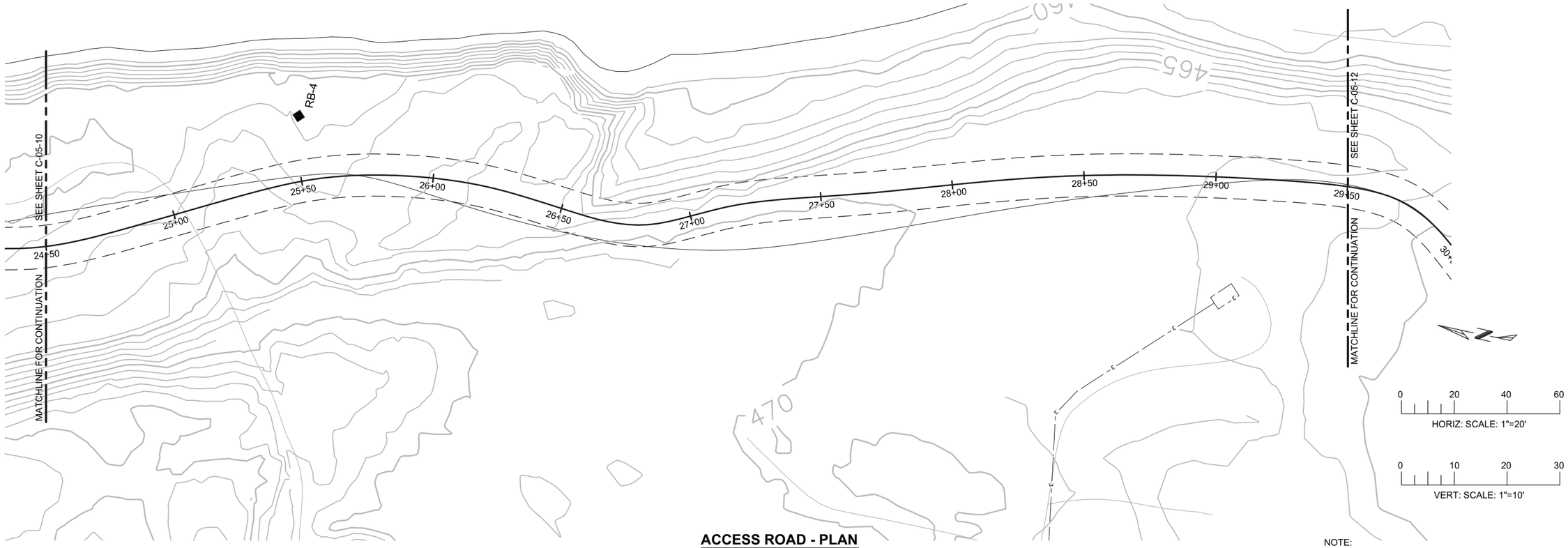

ACCESS ROAD - PLAN

(SCALE: 1" = 20')

NOTE:
TYPICAL ACCESS ROAD CONSTRUCTION DETAIL CROSS SECTION SHOWN ON SHEET C-05-13.

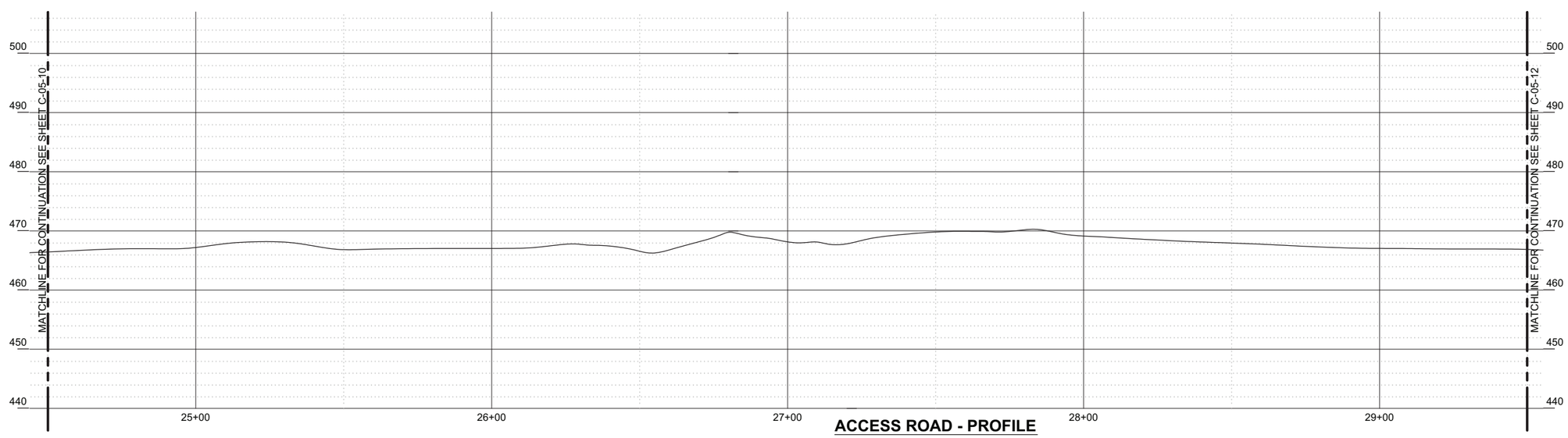

ACCESS ROAD - PROFILE

(SCALE: 1" = 20' H; 1" = 10' V)

- DRAFT -
NOT FOR
CONSTRUCTION

ETIC ENGINEERING

ARCADIS

NO.	DATE	DESCRIPTION	GM/SPEC	DWN	CHKD	SUPV	APVD BY
1	09/08/14	PRE-FINAL (90%) DESIGN		AJW	BAS	JPB	JEF
0	04/05/13	INTERMEDIATE (60%) DESIGN		AJW	KLD	JPB	JEF

REVISIONS

APPROVED BY: JEF

SO	
SUPV	JPB
DSGN	BAS
DWN	AJW
CHKD	JPB
OK	JEF
DATE	09/08/14
SCALES	1" = 20'

TOPOCK GROUNDWATER REMEDIATION PROJECT

ACCESS ROAD-
PLAN AND PROFILE - PIPELINE "G"
STA 24+50 TO STA 29+50

GAS TRANSMISSION & DISTRIBUTION
PACIFIC GAS AND ELECTRIC COMPANY
SAN FRANCISCO, CALIFORNIA

MICROFILM
BILL OF MATL
DWG LIST
SUPSDS
SUPSD BY
SHEET NO. of SHEETS
C-05-11
REV 1

08/27/2014, 13:51, G:\Graphics\ARI\TOPOCK-01\Post 90%\C-04-01 to 11_C-05-08 to 13AccessRoad.dwg, Tab: 11-

N1808

NOTE:
TYPICAL ACCESS ROAD CONSTRUCTION DETAIL
CROSS SECTION SHOWN ON SHEET C-05-13.

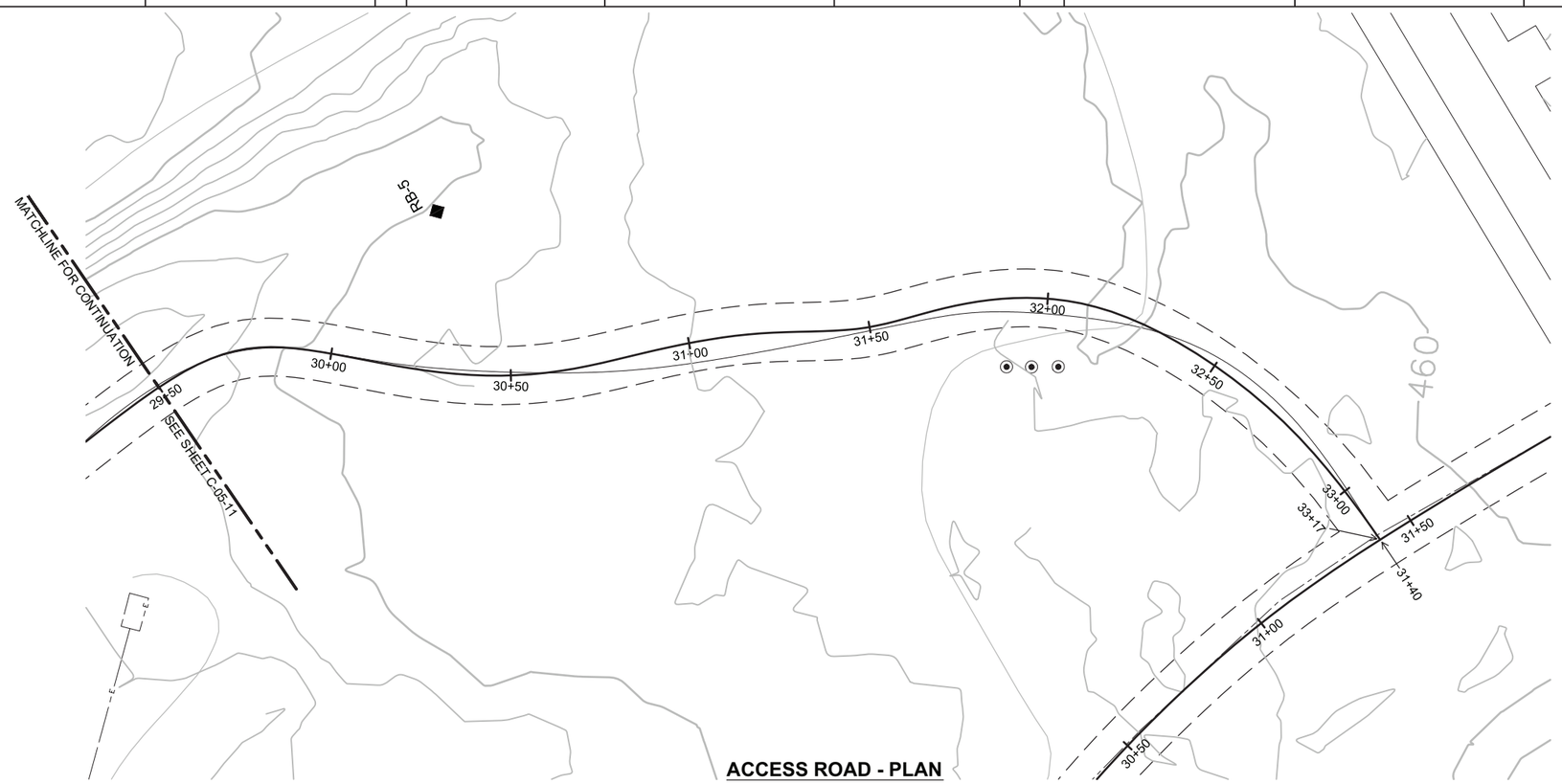

ACCESS ROAD - PLAN

(SCALE: 1" = 20')

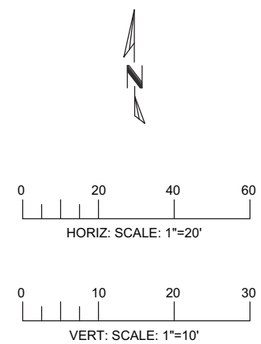

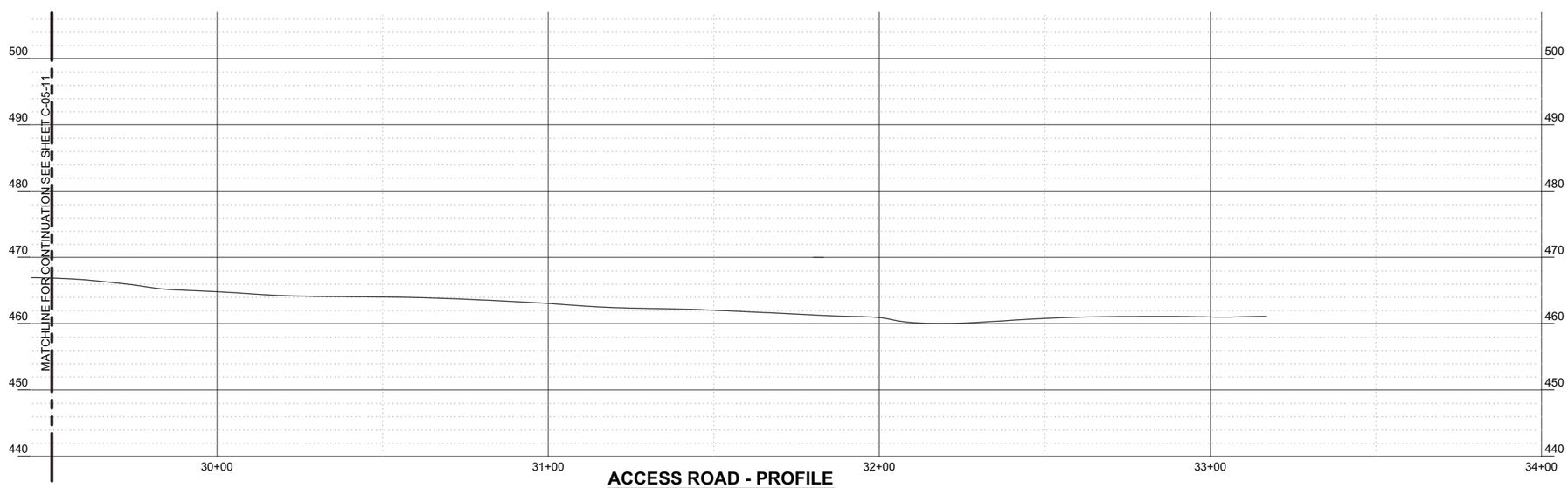

ACCESS ROAD - PROFILE

(SCALE: 1" = 20' H; 1" = 10' V)

- DRAFT -
NOT FOR
CONSTRUCTION

ETIC ENGINEERING

ARCADIS

NO.	DATE	DESCRIPTION	GM/SPEC	DWN	CHKD	SUPV	APVD BY
1	09/08/14	PRE-FINAL (90%) DESIGN		AJW	BAS	JPB	JEF
0	04/05/13	INTERMEDIATE (60%) DESIGN		AJW	KLD	JPB	JEF

REVISIONS

APPROVED BY: JEF

SO	
SUPV	JPB
DSGN	BAS
DWN	AJW
CHKD	JPB
OK	JEF
DATE	09/08/14
SCALES	1" = 20'

TOPOCK GROUNDWATER REMEDIATION PROJECT

ACCESS ROAD-
PLAN AND PROFILE - PIPELINE "G"
STA 29+50 TO STA 33+17

GAS TRANSMISSION & DISTRIBUTION
PACIFIC GAS AND ELECTRIC COMPANY
SAN FRANCISCO, CALIFORNIA

MICROFILM
BILL OF MATL
DWG LIST
SUPSDS
SUPSD BY
SHEET NO. of SHEETS
C-05-12
REV 1

N1808

08/27/2014, 13:51, G:\Graphics\ARI\TOPOCK-01\Post 90%\C-04-01 to 11_C-05-08 to 13AccessRoad.dwg, Tab: 12-

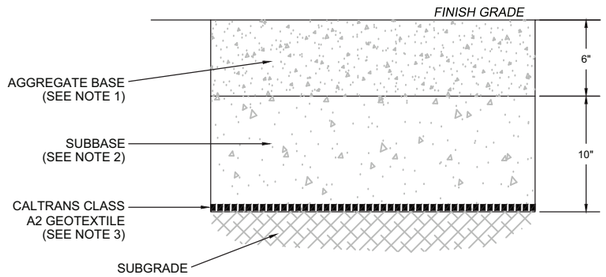

NOTES:
1. AGGREGATE BASE MATERIAL SHOULD MEET CALTRANS SPECIFICATION FOR CLASS 2 AGGREGATE BASE.
2. SUBBASE MATERIAL SHOULD MEET CALTRANS SPECIFICATION FOR CLASS 2 AGGREGATE BASE OR CLASS 1 OR 2 AGGREGATE SUBBASE.
3. IF ONLY CLASS 2 AGGREGATE BASE IS USED IN THE ROAD SECTION, THE GEOTEXTILE MAY BE OMITTED.

1 SECTION
NOT TO SCALE

C-05-08 THRU' C-05-12

- DRAFT -
NOT FOR
CONSTRUCTION

ETIC ENGINEERING

ARCADIS

NO.	DATE	DESCRIPTION	GM/SPEC	DWN	CHKD	SUPV	APVD BY
1	09/08/14	PRE-FINAL (90%) DESIGN		AJW	BAS	JPB	JEF
0	04/05/13	INTERMEDIATE (60%) DESIGN		AJW	KLD	JPB	JEF

REVISIONS

APPROVED BY: JEF

SO	
SUPV	JPB
DSGN	BAS
DWN	AJW
CHKD	JPB
OK	JEF
DATE	09/08/14
SCALES	1" = 20'

TOPOCK GROUNDWATER REMEDIATION PROJECT

ACCESS ROAD-
TYPICAL ROAD SECTION

GAS TRANSMISSION & DISTRIBUTION
PACIFIC GAS AND ELECTRIC COMPANY
SAN FRANCISCO, CALIFORNIA

MICROFILM
BILL OF MATL
DWG LIST
SUPSDS
SUPSD BY
SHEET NO. of SHEETS
C-05-13
REV 1

N1808

08/27/2014, 13:51, G:\Graphics\ARI\TOPOCK-01\Post 90%\C-04-01 to 11_C-05-08 to 13AccessRoad.dwg, Tab: C-05-13

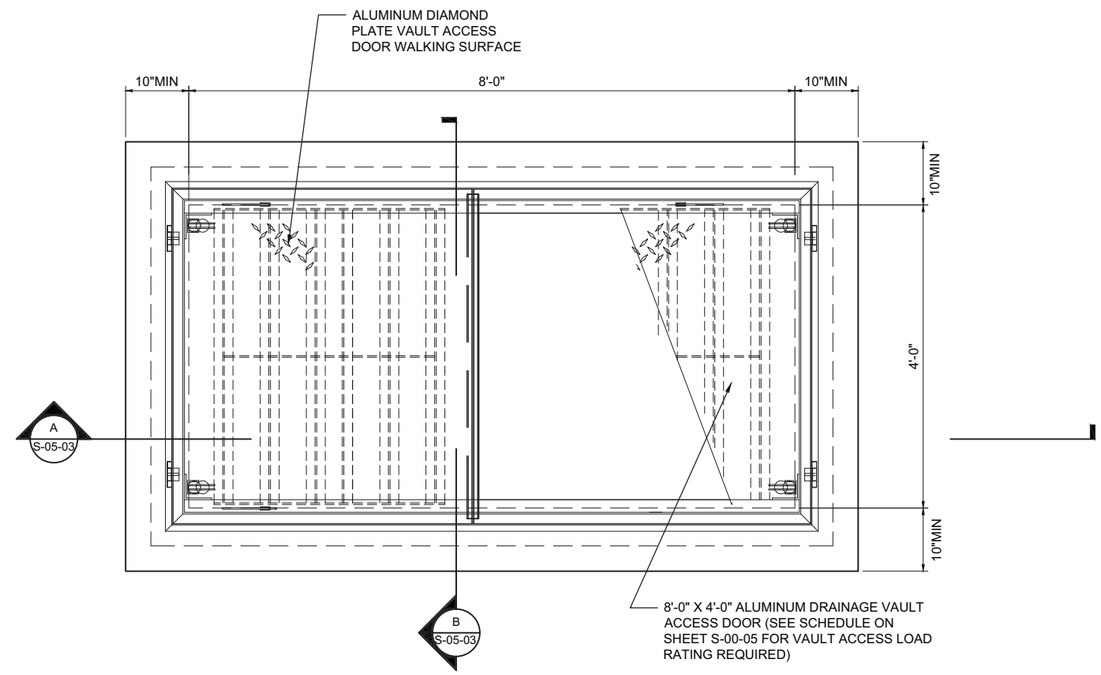

WELL METER VAULT

INNER RECIRCULATION LOOP EXTRACTION WELL VAULT TYPE 1 - PLAN

1"=1'-0"

NOTES:

1. PRECAST CONCRETE VAULT COMPONENTS SHALL BE DESIGNED WITH LOADING IN ACCORDANCE WITH AASHTO HS20-44.
2. CONCRETE SHALL BE 5,000 P.S.I. COMPRESSIVE STRENGTH @ 28 DAYS. REINFORCING STEEL SHALL BE ASTM A-615.
3. ALL PIPING AND CONDUIT SHALL BE SECURED TO THE WALLS OR BASE SLAB OF THE CONCRETE VAULTS WITH ANCHOR BOLTS, UNISTRUT, OR CONCRETE PIPE SUPPORTS. CONTRACTOR SHALL INSTALL SUPPORTS WHEREVER NECESSARY TO PROPERLY SUPPORT PIPING AND CONDUIT PER SPECIFICATION 40 05 15.
4. CONTRACTOR RESPONSIBLE FOR LOCATING AND VERIFYING LOCATION OF ALL UTILITIES LOCATED WITHIN AREAS TO BE AFFECTED BY CONSTRUCTION.
5. ALL PIPE PENETRATIONS SHALL BE LINK SEALED IN ACCORDANCE WITH SPECIFICATIONS.
6. SEE MECHANICAL DRAWINGS FOR ALL PIPE PENETRATIONS.

0 1' 2' 3'

SCALE: 1"=1'-0"

- DRAFT -
NOT FOR
CONSTRUCTION

ARCADIS

NO.	DATE	DESCRIPTION	GM/SPEC	DWN	CHKD	SUPV	APVD BY
1	09/08/14	PRE-FINAL (90%) DESIGN		GWE	MSL	JPB	JEF
0	04/05/13	INTERMEDIATE (60%) DESIGN		GWE	MSL	JPB	JEF

REVISIONS

APPROVED BY: JEF

SO	
SUPV	JPB
DSGN	MSL
DWN	GWE
CHKD	JPB
OK	JEF
DATE	09/08/14
SCALES	AS SHOWN

TOPOCK GROUNDWATER REMEDIATION PROJECT
INNER RECIRCULATION LOOP
EXTRACTION WELL VAULTS TYPE 1
- PLAN
GAS TRANSMISSION & DISTRIBUTION
PACIFIC GAS AND ELECTRIC COMPANY
SAN FRANCISCO, CALIFORNIA

MICROFILM
BILL OF MATL
DWG LIST
SUPSDS
SUPSD BY
SHEET NO. of SHEETS
S-05-01
REV 1

N1808

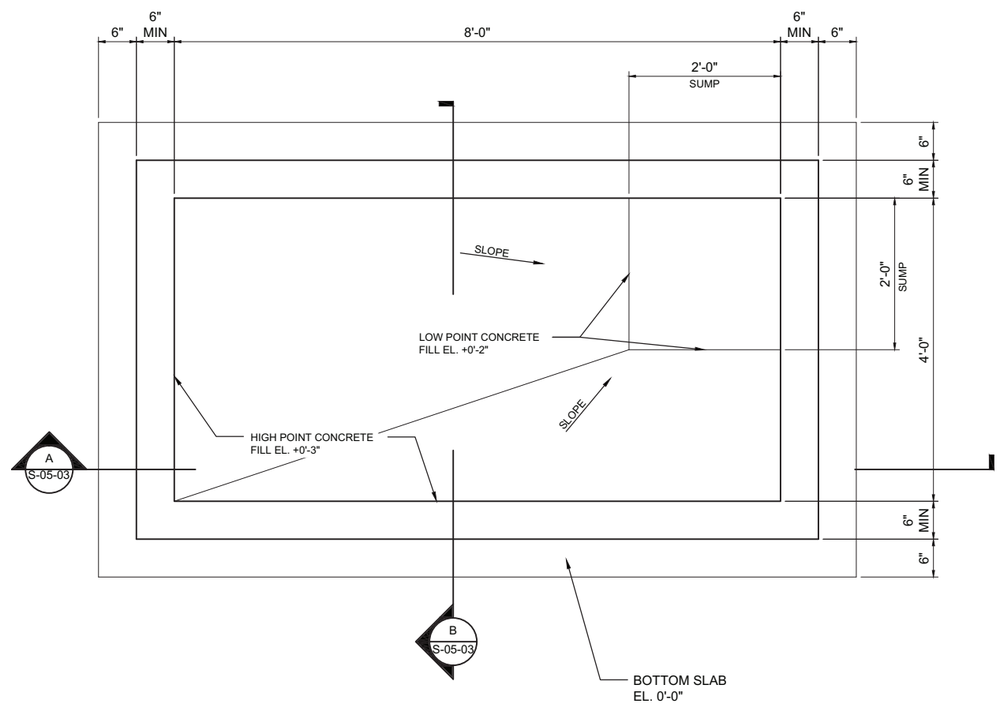

INNER RECIRCULATION LOOP EXTRACTION WELL VAULT- FOUNDATION PLAN

1"=1'-0"

NOTES:

1. PRECAST CONCRETE VAULT COMPONENTS SHALL BE DESIGNED WITH LOADING IN ACCORDANCE WITH AASHTO HS20-44.
2. CONCRETE SHALL BE 5,000 P.S.I. COMPRESSIVE STRENGTH @ 28 DAYS. REINFORCING STEEL SHALL BE ASTM A-615.
3. ALL PIPING AND CONDUIT SHALL BE SECURED TO THE WALLS OR BASE SLAB OF THE CONCRETE VAULTS WITH ANCHOR BOLTS, UNISTRUT, OR CONCRETE PIPE SUPPORTS. CONTRACTOR SHALL INSTALL SUPPORTS WHEREVER NECESSARY TO PROPERLY SUPPORT PIPING AND CONDUIT PER SPECIFICATION 40 05 15.
4. CONTRACTOR RESPONSIBLE FOR LOCATING AND VERIFYING LOCATION OF ALL UTILITIES LOCATED WITHIN AREAS TO BE AFFECTED BY CONSTRUCTION.
5. ALL PIPE PENETRATIONS SHALL BE LINK SEALED IN ACCORDANCE WITH SPECIFICATIONS.
6. SEE MECHANICAL DRAWINGS FOR ALL PIPE PENETRATIONS.

0 1' 2' 3'

SCALE: 1"=1'-0"

- DRAFT -
NOT FOR
CONSTRUCTION

ARCADIS

NO.	DATE	DESCRIPTION	GM/SPEC	DWN	CHKD	SUPV	APVD	BY
1	09/08/14	PRE-FINAL (90%) DESIGN		GWE	MSL	JPB	JEF	
0	04/05/13	INTERMEDIATE (60%) DESIGN		GWE	MSL	JPB	JEF	

REVISIONS

APPROVED BY: JEF

SO	
SUPV	JPB
DSGN	MSL
DWN	GWE
CHKD	JPB
OK	JEF
DATE	09/08/14
SCALES	AS SHOWN

TOPOCK GROUNDWATER REMEDIATION PROJECT
INNER RECIRCULATION
LOOP EXTRACTION WELL
VAULTS - FOUNDATION PLAN
GAS TRANSMISSION & DISTRIBUTION
PACIFIC GAS AND ELECTRIC COMPANY
SAN FRANCISCO, CALIFORNIA

MICROFILM
BILL OF MATL
DWG LIST
SUPSDS
SUPSD BY
SHEET NO. of SHEETS

S-05-02 REV 1

N1B08

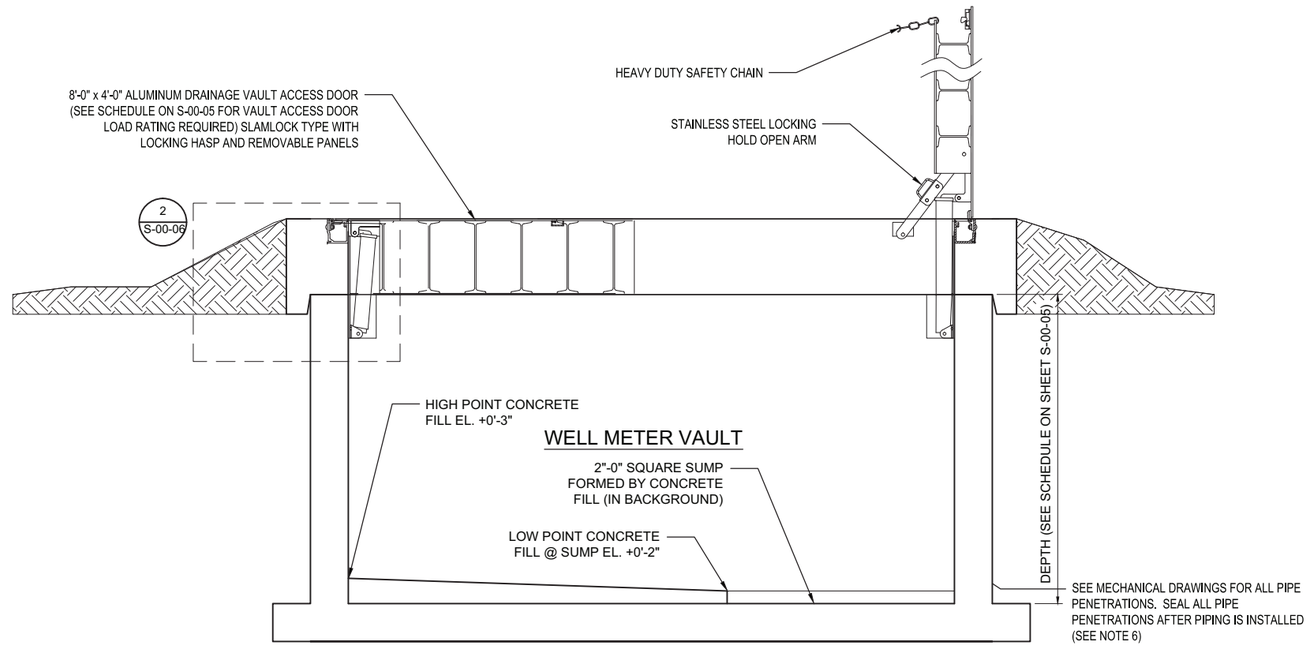

A INNER RECIRCULATION LOOP EXTRACTION WELL METER TYPE 1 - SECTION

1" = 1'-0"

S-05-01, S-05-02

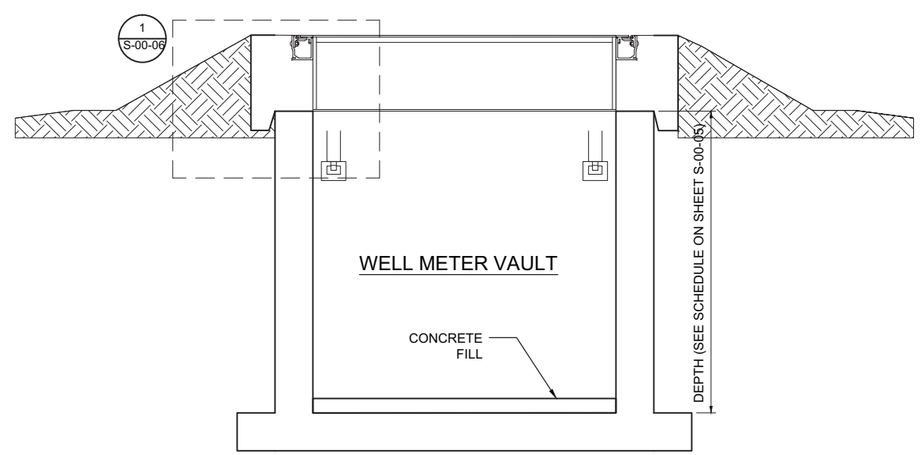

0 1' 2' 3'

SCALE: 1"=1'-0"

NOTES:

1. PRECAST CONCRETE VAULT COMPONENTS SHALL BE DESIGNED WITH LOADING IN ACCORDANCE WITH AASHTO HS20-44.
2. CONCRETE SHALL BE 5,000 P.S.I. COMPRESSIVE STRENGTH @ 28 DAYS. REINFORCING STEEL SHALL BE ASTM A-615.
3. ALL PIPING AND CONDUIT SHALL BE SECURED TO THE WALLS OR BASE SLAB OF THE CONCRETE VAULTS WITH ANCHOR BOLTS, UNISTRUT, OR CONCRETE PIPE SUPPORTS. CONTRACTOR SHALL INSTALL SUPPORTS WHEREVER NECESSARY TO PROPERLY SUPPORT PIPING AND CONDUIT PER SPECIFICATION 40 05 15.
4. CONTRACTOR RESPONSIBLE FOR LOCATING AND VERIFYING LOCATION OF ALL UTILITIES LOCATED WITHIN AREAS TO BE AFFECTED BY CONSTRUCTION.
5. ALL PIPE PENETRATIONS SHALL BE LINK SEALED IN ACCORDANCE WITH SPECIFICATIONS.
6. SEE MECHANICAL DRAWINGS FOR ALL PIPE PENETRATIONS.

B INNER RECIRCULATION LOOP EXTRACTION WELL VAULT TYPE 1 - SECTION

1" = 1'-0"

S-05-01, S-05-02

- DRAFT -
NOT FOR CONSTRUCTION

ARCADIS

NO.	DATE	DESCRIPTION	GM/SPEC	DWN	CHKD	SUPV	APVD BY
1	09/08/14	PRE-FINAL (90%) DESIGN		GWE	MSL	JPB	JEF
0	04/05/13	INTERMEDIATE (60%) DESIGN		GWE	MSL	JPB	JEF

REVISIONS

APPROVED BY: JEF

SO	
SUPV	JPB
DSGN	MSL
DWN	GWE
CHKD	JPB
OK	JEF
DATE	09/08/14
SCALES	AS SHOWN

TOPOCK GROUNDWATER REMEDIATION PROJECT
INNER RECIRCULATION LOOP EXTRACTION WELL VAULTS - SECTIONS
GAS TRANSMISSION & DISTRIBUTION
PACIFIC GAS AND ELECTRIC COMPANY
SAN FRANCISCO, CALIFORNIA

MICROFILM
BILL OF MATL
DWG LIST
SUPSDS
SUPSD BY
SHEET NO. of SHEETS
S-05-03
REV 1

N1808

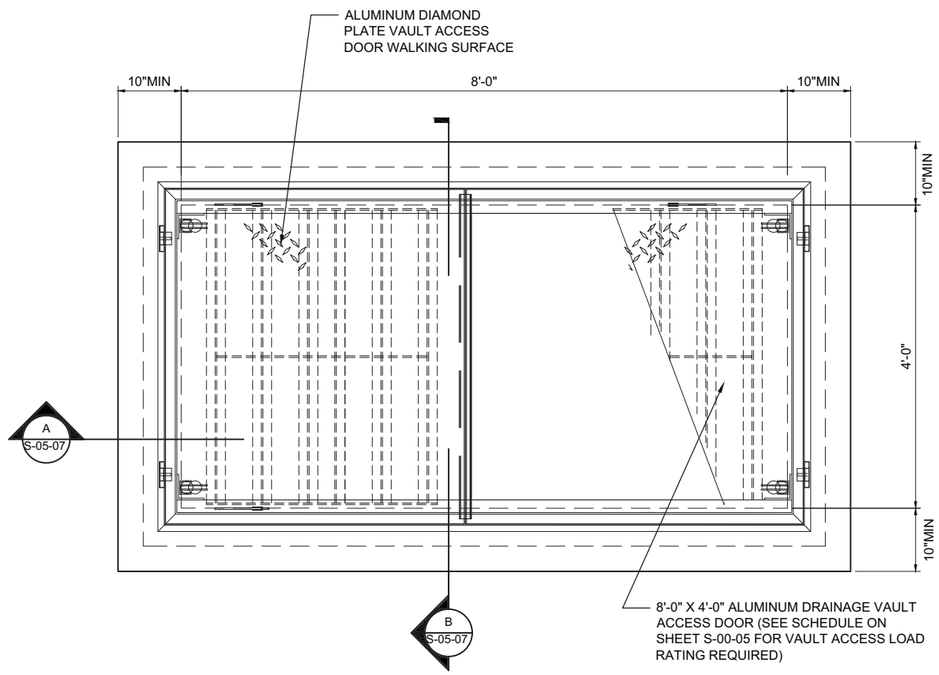

WELL METER VAULT

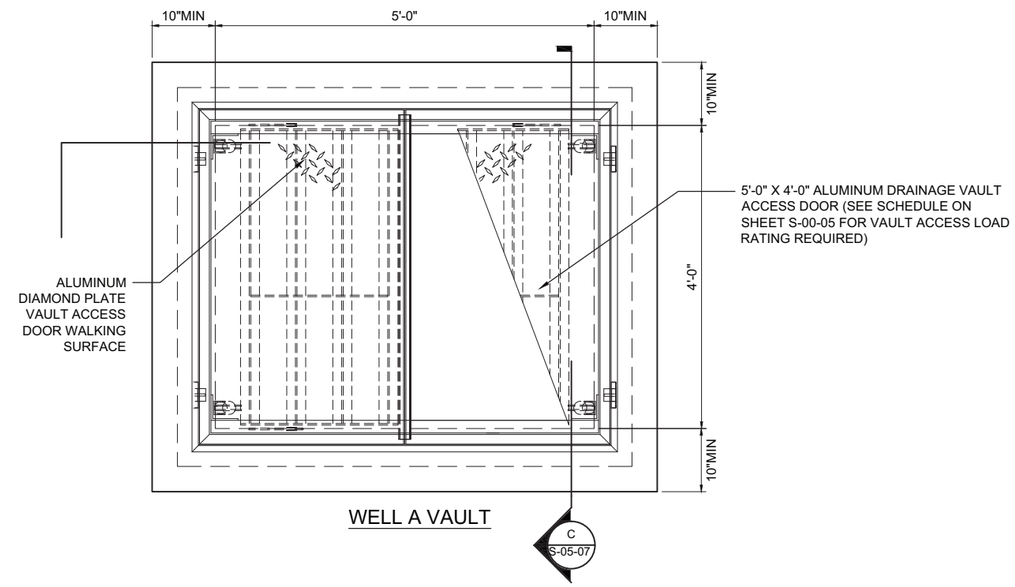

WELL A VAULT

INNER RECIRCULATION LOOP INJECTION WELL METER VAULT AND WELL VAULT TYPE 1 - PLAN

1"=1'-0"

NOTES:

1. PRECAST CONCRETE VAULT COMPONENTS SHALL BE DESIGNED WITH LOADING IN ACCORDANCE WITH AASHTO HS20-44.
2. CONCRETE SHALL BE 5,000 P.S.I. COMPRESSIVE STRENGTH @ 28 DAYS. REINFORCING STEEL SHALL BE ASTM A-615.
3. ALL PIPING AND CONDUIT SHALL BE SECURED TO THE WALLS OR BASE SLAB OF THE CONCRETE VAULTS WITH ANCHOR BOLTS, UNISTRUT, OR CONCRETE PIPE SUPPORTS. CONTRACTOR SHALL INSTALL SUPPORTS WHEREVER NECESSARY TO PROPERLY SUPPORT PIPING AND CONDUIT PER SPECIFICATION 40 05 15.
4. CONTRACTOR RESPONSIBLE FOR LOCATING AND VERIFYING LOCATION OF ALL UTILITIES LOCATED WITHIN AREAS TO BE AFFECTED BY CONSTRUCTION.
5. ALL PIPE PENETRATIONS SHALL BE LINK SEALED IN ACCORDANCE WITH SPECIFICATIONS.
6. SEE MECHANICAL DRAWINGS FOR ALL PIPE PENETRATIONS.

0 1' 2' 3'

SCALE: 1"=1'-0"

- DRAFT -
NOT FOR
CONSTRUCTION

ARCADIS

NO.	DATE	DESCRIPTION	GM/SPEC	DWN	CHKD	SUPV	APVD BY
1	09/08/14	PRE-FINAL (90%) DESIGN		GWE	MSL	JPB	JEF
0	04/05/13	INTERMEDIATE (60%) DESIGN		GWE	MSL	JPB	JEF

REVISIONS

APPROVED BY: JEF

SO
SUPV JPB
DSGN MSL
DWN GWE
CHKD JPB
OK JEF
DATE 09/08/14
SCALES AS SHOWN

TOPOCK GROUNDWATER REMEDIATION PROJECT
INNER RECIRCULATION LOOP INJECTION WELL VAULTS - TYPE 1 - PLAN
GAS TRANSMISSION & DISTRIBUTION
PACIFIC GAS AND ELECTRIC COMPANY
SAN FRANCISCO, CALIFORNIA

MICROFILM
BILL OF MATL
DWG LIST
SUPSDS
SUPSD BY
SHEET NO. of SHEETS
S-05-04
REV 1

N1808

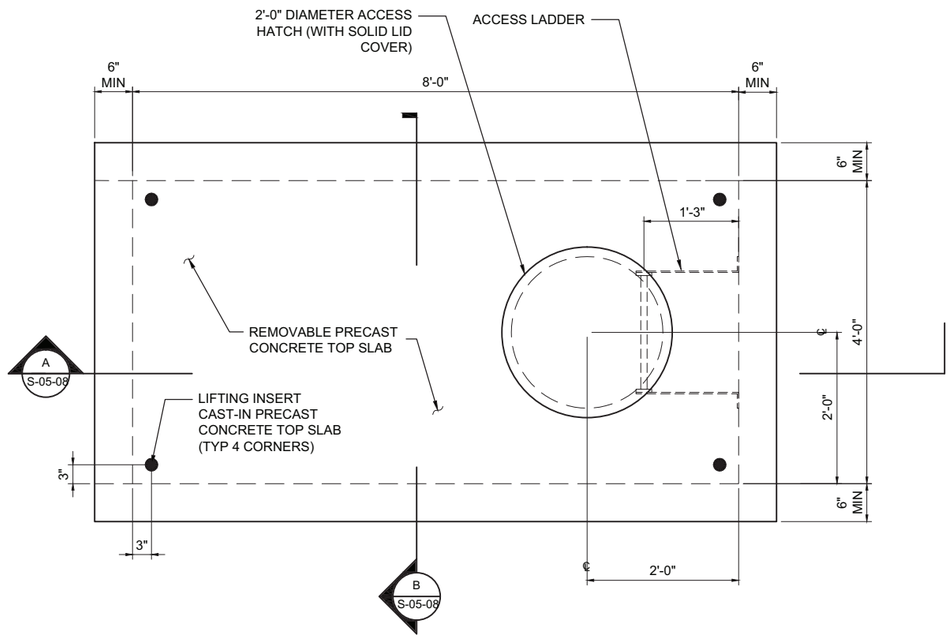

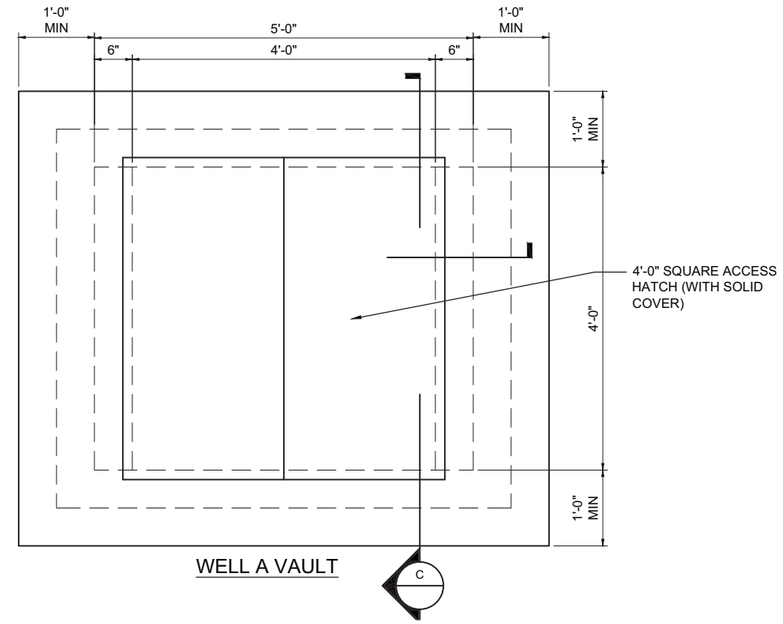

WELL A VAULT

NOTES:

1. PRECAST CONCRETE VAULT COMPONENTS SHALL BE DESIGNED WITH LOADING IN ACCORDANCE WITH AASHTO HS20-44.
2. CONCRETE SHALL BE 5,000 P.S.I. COMPRESSIVE STRENGTH @ 28 DAYS. REINFORCING STEEL SHALL BE ASTM A-615.
3. ALL PIPING AND CONDUIT SHALL BE SECURED TO THE WALLS OR BASE SLAB OF THE CONCRETE VAULTS WITH ANCHOR BOLTS, UNISTRUT, OR CONCRETE PIPE SUPPORTS. CONTRACTOR SHALL INSTALL SUPPORTS WHEREVER NECESSARY TO PROPERLY SUPPORT PIPING AND CONDUIT PER SPECIFICATION 40 05 15.
4. CONTRACTOR RESPONSIBLE FOR LOCATING AND VERIFYING LOCATION OF ALL UTILITIES LOCATED WITHIN AREAS TO BE AFFECTED BY CONSTRUCTION.
5. ALL PIPE PENETRATIONS SHALL BE LINK SEALED IN ACCORDANCE WITH SPECIFICATIONS.
6. SEE MECHANICAL DRAWINGS FOR ALL PIPE PENETRATIONS.
7. ACCESS HATCH, SOLID LID, AND FRAME TO BE HIGHWAY RATED (HS20-44) AND MANUFACTURED BY NEENAH FOUNDRY OR EAST JORDAN IRON WORKS.
8. PROVIDE 90° HOOK AT ENDS OF TOP AND BOTTOM RESTEEL IN WELL METER VAULT TOP SLAB WITHIN 1'-0" OF LIFTING INSERTS.

INNER RECIRCULATION LOOP INJECTION WELL METER VAULT AND WELL VAULT TYPE 2 - PLAN

1"=1'-0"

0 1' 2' 3'

SCALE: 1"=1'-0"

- DRAFT -
NOT FOR CONSTRUCTION

ARCADIS

NO.	DATE	DESCRIPTION	GM/SPEC	DWN	CHKD	SUPV	APVD BY
1	09/08/14	PRE-FINAL (90%) DESIGN		GWE	MSL	JPB	JEF
0	04/05/13	INTERMEDIATE (60%) DESIGN		GWE	MSL	JPB	JEF

REVISIONS

APPROVED BY: JEF

SO	
SUPV	JPB
DSGN	MSL
DWN	GWE
CHKD	JPB
OK	JEF
DATE	09/08/14
SCALES	AS SHOWN

TOPOCK GROUNDWATER REMEDIATION PROJECT
INNER RECIRCULATION LOOP INJECTION WELL VAULTS TYPE 2 - PLAN
GAS TRANSMISSION & DISTRIBUTION
PACIFIC GAS AND ELECTRIC COMPANY
SAN FRANCISCO, CALIFORNIA

MICROFILM
BILL OF MATL
DWG LIST
SUPSDS
SUPSD BY
SHEET NO. of SHEETS: S-05-05
REV: 1

N1808

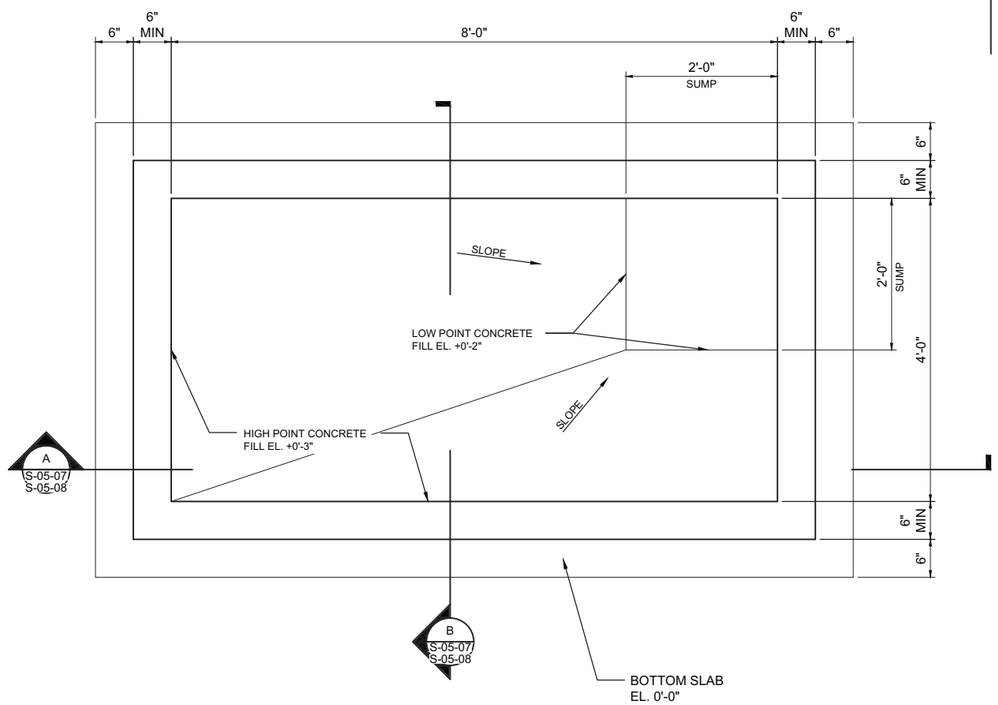

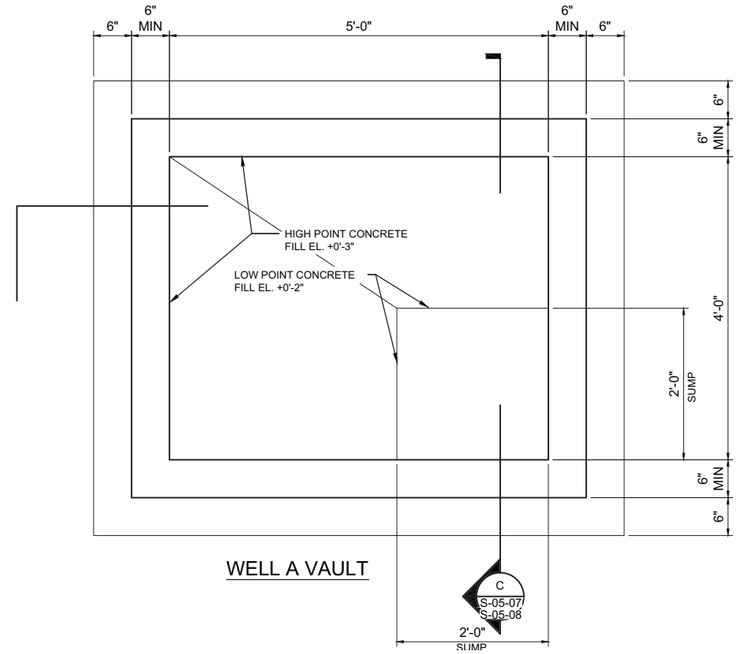

WELL A VAULT

NOTES:

1. PRECAST CONCRETE VAULT COMPONENTS SHALL BE DESIGNED WITH LOADING IN ACCORDANCE WITH AASHTO HS20-44.
2. CONCRETE SHALL BE 5,000 P.S.I. COMPRESSIVE STRENGTH @ 28 DAYS. REINFORCING STEEL SHALL BE ASTM A-615.
3. ALL PIPING AND CONDUIT SHALL BE SECURED TO THE WALLS OR BASE SLAB OF THE CONCRETE VAULTS WITH ANCHOR BOLTS, UNISTRUT, OR CONCRETE PIPE SUPPORTS. CONTRACTOR SHALL INSTALL SUPPORTS WHEREVER NECESSARY TO PROPERLY SUPPORT PIPING AND CONDUIT PER SPECIFICATION 40 05 15.
4. CONTRACTOR RESPONSIBLE FOR LOCATING AND VERIFYING LOCATION OF ALL UTILITIES LOCATED WITHIN AREAS TO BE AFFECTED BY CONSTRUCTION.
5. ALL PIPE PENETRATIONS SHALL BE LINK SEALED IN ACCORDANCE WITH SPECIFICATIONS.
6. SEE MECHANICAL DRAWINGS FOR ALL PIPE PENETRATIONS.

INNER RECIRCULATION LOOP INJECTION WELL METER VAULT AND WELL VAULTS - FOUNDATION PLAN

1"=1'-0"

0 1' 2' 3'

SCALE: 1"=1'-0"

- DRAFT -
NOT FOR
CONSTRUCTION

ARCADIS

NO.	DATE	DESCRIPTION	GM/SPEC	DWN	CHKD	SUPV	APVD BY
1	09/08/14	PRE-FINAL (90%) DESIGN		GWE	MSL	JPB	JEF
0	04/05/13	INTERMEDIATE (60%) DESIGN		GWE	MSL	JPB	JEF

REVISIONS

APPROVED BY: JEF

SO	
SUPV	JPB
DSGN	MSL
DWN	GWE
CHKD	JPB
OK	JEF
DATE	09/08/14
SCALES	AS SHOWN

TOPOCK GROUNDWATER REMEDIATION PROJECT
INNER RECIRCULATION LOOP INJECTION WELL VAULTS - FOUNDATION PLAN
GAS TRANSMISSION & DISTRIBUTION
PACIFIC GAS AND ELECTRIC COMPANY
SAN FRANCISCO, CALIFORNIA

MICROFILM
BILL OF MATL
DWG LIST
SUPSDS
SUPSD BY
SHEET NO. of SHEETS: S-05-06
REV: 1

N1808

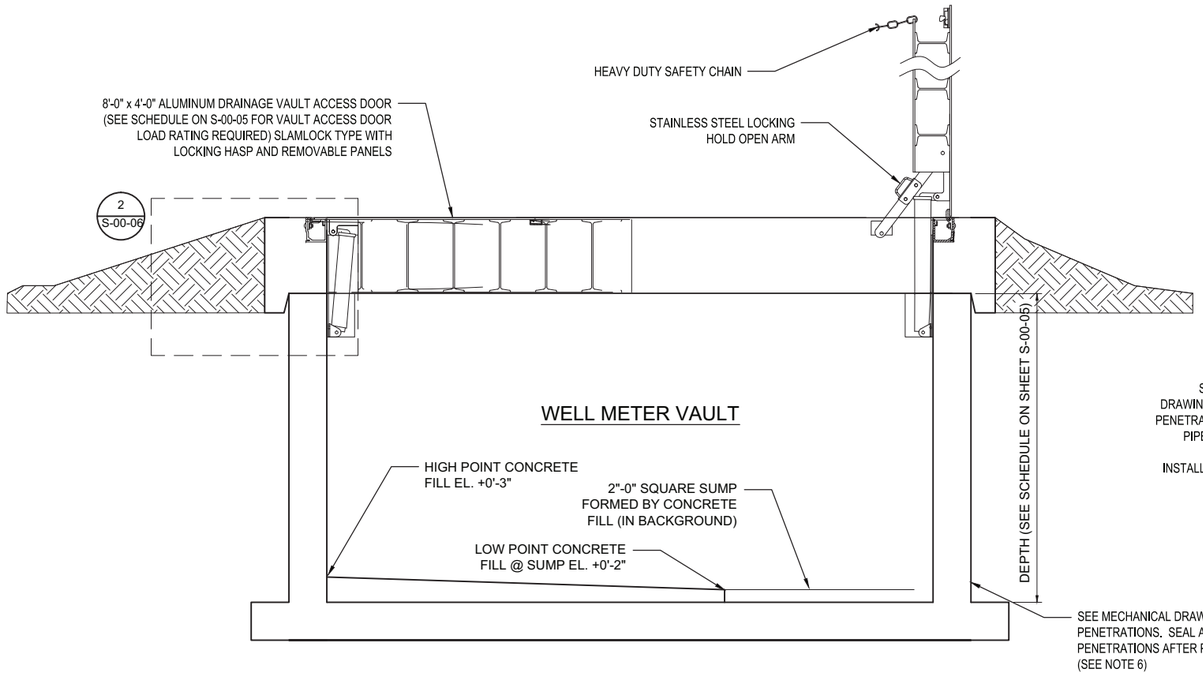

A INNER RECIRCULATION LOOP INJECTION WELL METER VAULT AND WELL VAULT TYPE 1 - SECTION
1" = 1'-0"
S-05-04, S-05-06

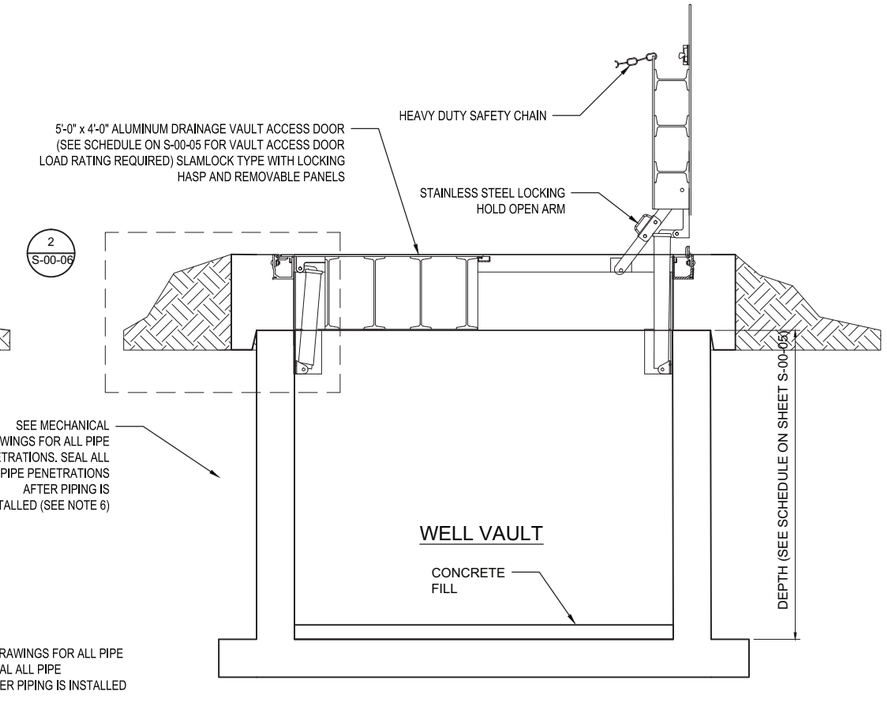

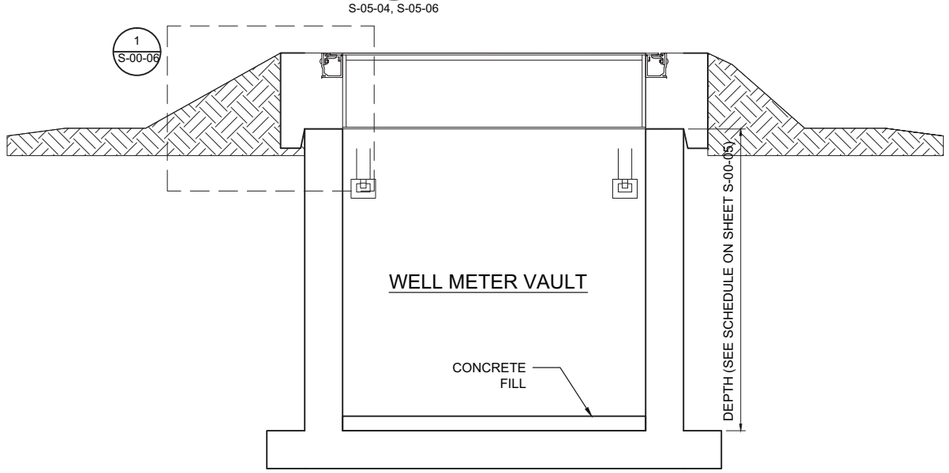

B INNER RECIRCULATION LOOP INJECTION WELL METER VAULT TYPE 1 - SECTION
1" = 1'-0"
S-05-04, S-05-06

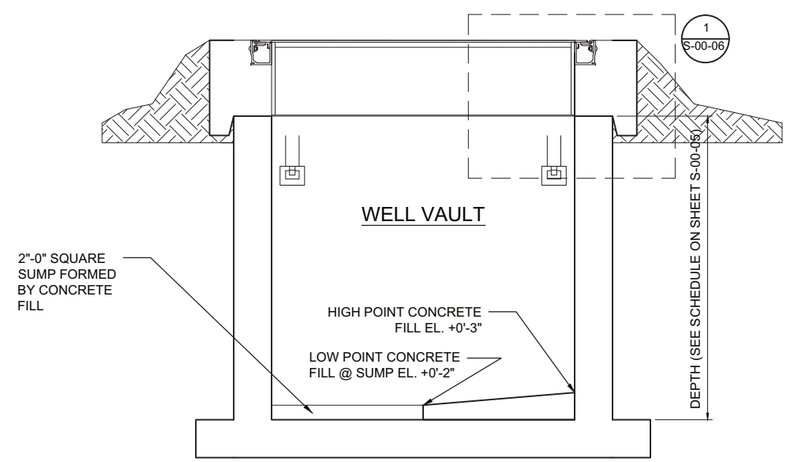

C INNER RECIRCULATION LOOP INJECTION WELL VAULT TYPE 1 - SECTION
1" = 1'-0"
S-05-04, S-05-06

0 1' 2' 3'
SCALE: 1"=1'-0"

NOTES:
1. PRECAST CONCRETE VAULT COMPONENTS SHALL BE DESIGNED WITH LOADING IN ACCORDANCE WITH AASHTO HS20-44.
2. CONCRETE SHALL BE 5,000 P.S.I. COMPRESSIVE STRENGTH @ 28 DAYS. REINFORCING STEEL SHALL BE ASTM A-615.
3. ALL PIPING AND CONDUIT SHALL BE SECURED TO THE WALLS OR BASE SLAB OF THE CONCRETE VAULTS WITH ANCHOR BOLTS, UNISTRUT, OR CONCRETE PIPE SUPPORTS. CONTRACTOR SHALL INSTALL SUPPORTS WHEREVER NECESSARY TO PROPERLY SUPPORT PIPING AND CONDUIT PER SPECIFICATION 40 05 15.
4. CONTRACTOR RESPONSIBLE FOR LOCATING AND VERIFYING LOCATION OF ALL UTILITIES LOCATED WITHIN AREAS TO BE AFFECTED BY CONSTRUCTION.
5. ALL PIPE PENETRATIONS SHALL BE LINK SEALED IN ACCORDANCE WITH SPECIFICATIONS.
6. SEE MECHANICAL DRAWINGS FOR ALL PIPE PENETRATIONS.

- DRAFT -
NOT FOR CONSTRUCTION

ARCADIS

NO.	DATE	DESCRIPTION	GM/SPEC	DWN	CHKD	SUPV	APVD BY
1	09/08/14	PRE-FINAL (90%) DESIGN		GWE	MSL	JPB	JEF
0	04/05/13	INTERMEDIATE (60%) DESIGN		GWE	MSL	JPB	JEF

REVISIONS

APPROVED BY: JEF
SO
SUPV JPB
DSGN MSL
DWN GWE
CHKD JPB
OK JEF
DATE 09/08/14
SCALES AS SHOWN

TOPOCK GROUNDWATER REMEDIATION PROJECT
INNER RECIRCULATION LOOP INJECTION WELL VAULTS - SECTIONS SHEET 1 OF 2
GAS TRANSMISSION & DISTRIBUTION
PACIFIC GAS AND ELECTRIC COMPANY
SAN FRANCISCO, CALIFORNIA

MICROFILM
BILL OF MATL
DWG LIST
SUPSDS
SUPSD BY
SHEET NO. of SHEETS
S-05-07
REV 1

N1808

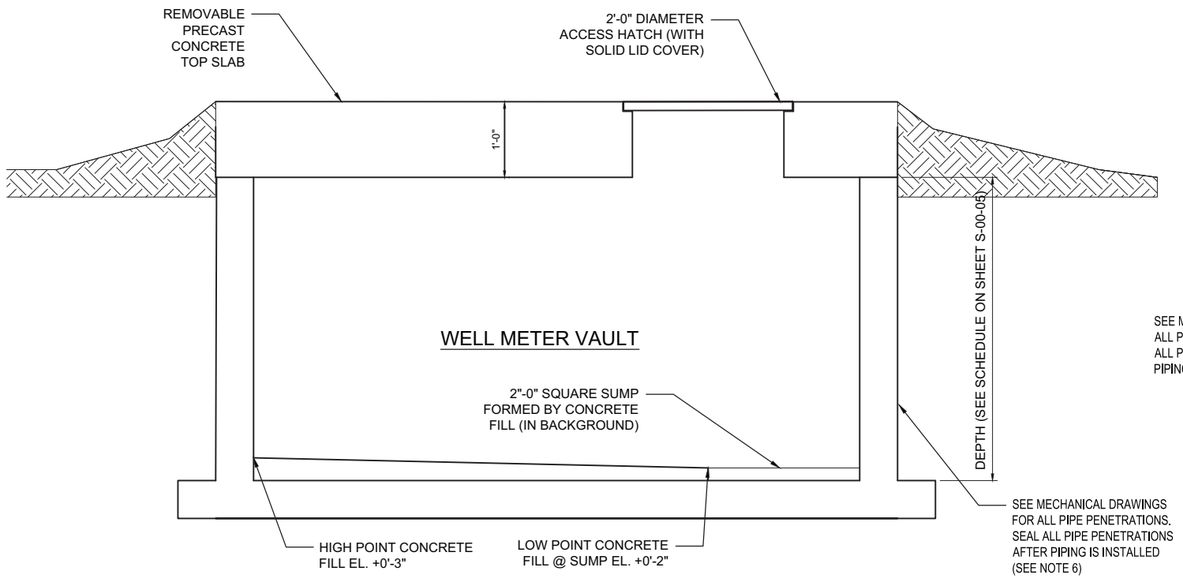

A INNER RECIRCULATION LOOP INJECTION WELL METER VAULT AND WELL VAULT TYPE 2 - SECTION
1" = 1'-0"
S-05-05, S-05-06

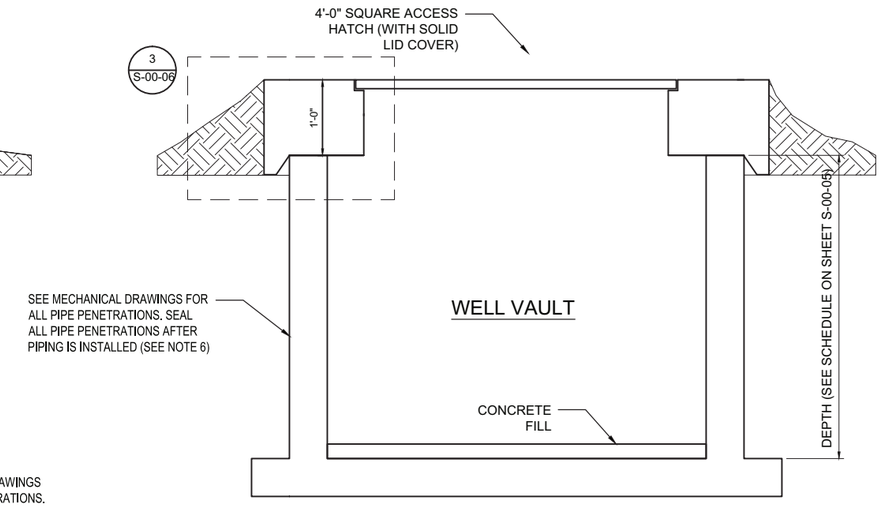

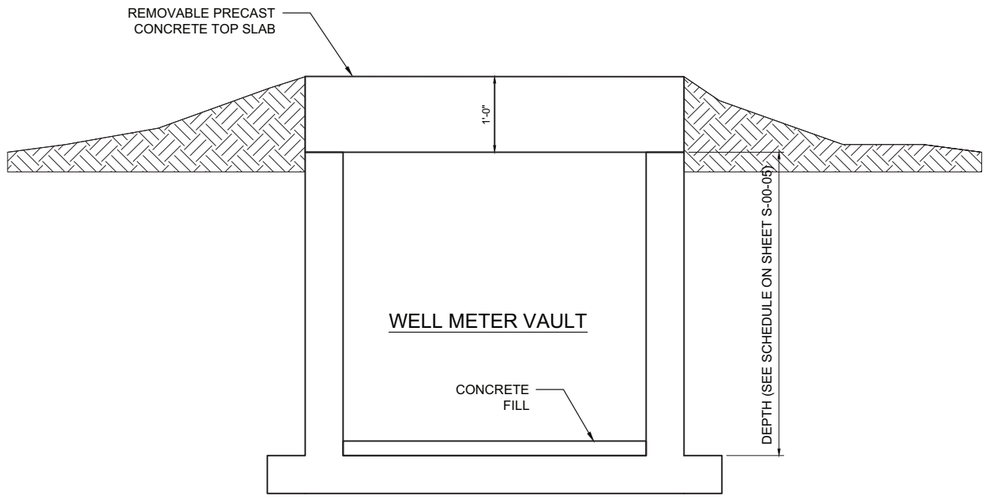

B INNER RECIRCULATION LOOP INJECTION WELL METER VAULT TYPE 2 - SECTION
1" = 1'-0"
S-05-05, S-05-06

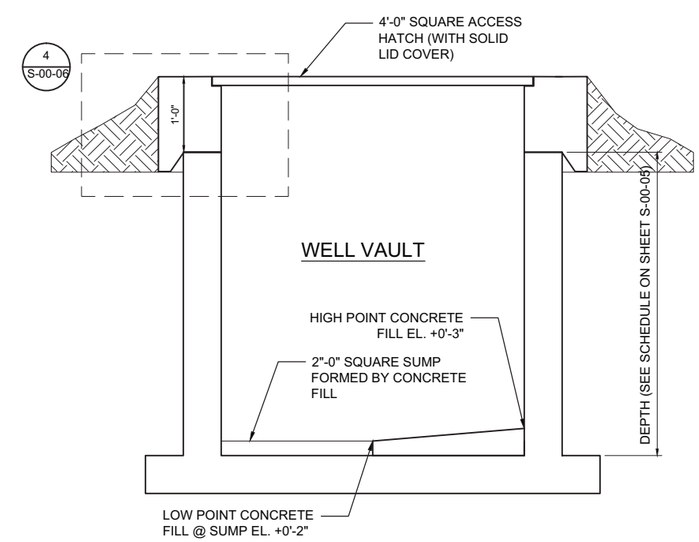

C INNER RECIRCULATION LOOP INJECTION WELL VAULT TYPE 2 - SECTION
1" = 1'-0"
S-05-05, S-05-06

0 1' 2' 3'
SCALE: 1"=1'-0"

NOTES:
1. PRECAST CONCRETE VAULT COMPONENTS SHALL BE DESIGNED WITH LOADING IN ACCORDANCE WITH AASHTO HS20-44.
2. CONCRETE SHALL BE 5,000 P.S.I. COMPRESSIVE STRENGTH @ 28 DAYS. REINFORCING STEEL SHALL BE ASTM A-615.
3. ALL PIPING AND CONDUIT SHALL BE SECURED TO THE WALLS OR BASE SLAB OF THE CONCRETE VAULTS WITH ANCHOR BOLTS, UNISTRUT, OR CONCRETE PIPE SUPPORTS. CONTRACTOR SHALL INSTALL SUPPORTS WHEREVER NECESSARY TO PROPERLY SUPPORT PIPING AND CONDUIT PER SPECIFICATION 40 05 15.
4. CONTRACTOR RESPONSIBLE FOR LOCATING AND VERIFYING LOCATION OF ALL UTILITIES LOCATED WITHIN AREAS TO BE AFFECTED BY CONSTRUCTION.
5. ALL PIPE PENETRATIONS SHALL BE LINK SEALED IN ACCORDANCE WITH SPECIFICATIONS.
6. SEE MECHANICAL DRAWINGS FOR ALL PIPE PENETRATIONS.

- DRAFT -
NOT FOR CONSTRUCTION

ARCADIS

NO.	DATE	DESCRIPTION	GM/SPEC	DWN	CHKD	SUPV	APVD BY
1	09/08/14	PRE-FINAL (90%) DESIGN		GWE	MSL	JPB	JEF
0	04/05/13	INTERMEDIATE (60%) DESIGN		GWE	MSL	JPB	JEF

REVISIONS

APPROVED BY: JEF

SO	
SUPV	JPB
DSGN	MSL
DWN	GWE
CHKD	JPB
OK	JEF
DATE	09/08/14
SCALES	AS SHOWN

TOPOCK GROUNDWATER REMEDIATION PROJECT
INNER RECIRCULATION LOOP INJECTION WELL VAULTS - SECTIONS - SHEET 2 OF 2
GAS TRANSMISSION & DISTRIBUTION
PACIFIC GAS AND ELECTRIC COMPANY
SAN FRANCISCO, CALIFORNIA

MICROFILM
BILL OF MATL
DWG LIST
SUPSDS
SUPSD BY
SHEET NO. of SHEETS
S-05-08
REV 1

N1808

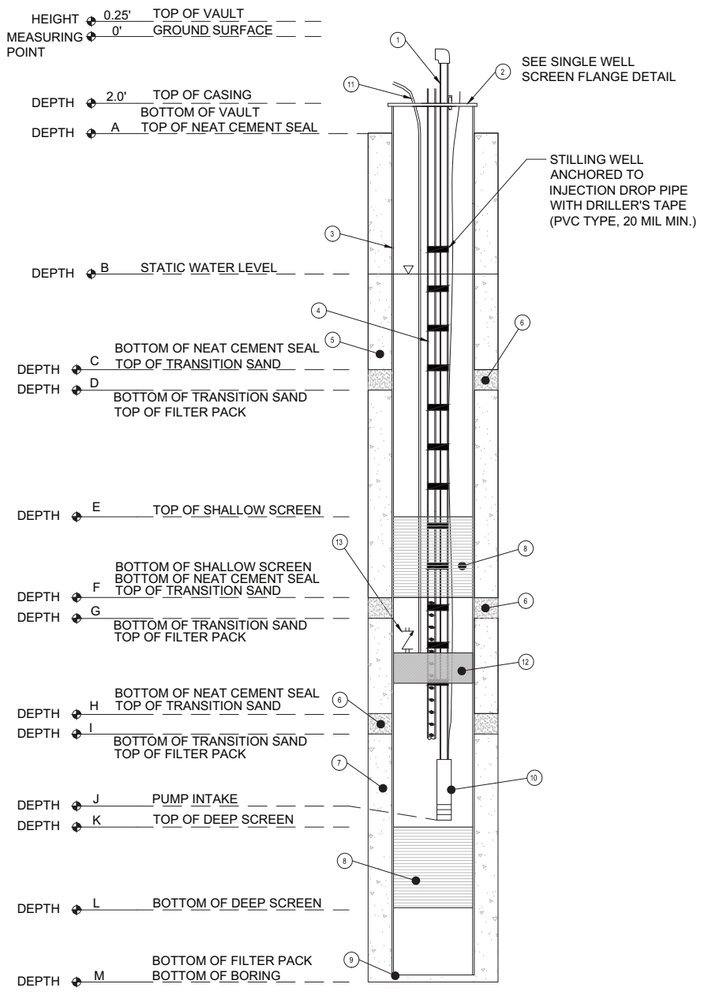

A RIVERBANK DUAL SCREEN EXTRACTION WELL DETAIL

NO SCALE

SEE WELL CONSTRUCTION SCHEDULE SHEET M-X-01 FOR REPRESENTATIVE DEPTHS. WELL DIAMETER EXAGGERATED TO SHOW DETAIL.

1	2" PVC DROP PIPE
2	CUSTOM TAPERED WELL FLANGE
3	WELL CASING (MATERIALS TBD)
4	1" PVC TUBING (STILLING WELL WITH PRESSURE TRANSDUCER)
5	ANNULAR SPACE, 100% NEAT CEMENT GROUT
6	ANNULAR SPACE, TRANSITION SAND (SIZE TBD)
7	ANNULAR SPACE, FILTER PACK (SIZE TBD)
8	WELL SCREEN (MATERIALS & TYPE TBD)
9	SUMP
10	GROUNDWATER EXTRACTION PUMP
11	1/4" DIAMETER HOSE FROM PACKER TO FILL ASSEMBLY
12	PNEUMATIC WELL PACKER
13	3/4" PACKER PRESSURE RELIEF SAFETY VALVE

NOTES:

1. ALL DEPTH INTERVALS 'A' THRU 'K' ARE IN FEET BELOW GROUND SURFACE.
2. ALL COORDINATES BASED ON NAD83, CA ZONE V.
3. ALL WELL SEALS ARE 100% NEAT CEMENT.
4. ALL ABOVE-GRADE PIPING AND INSTRUMENTATION INSTALLED IN ACCORDANCE WITH THE P&ID AND THE WELLHEAD MECHANICAL LAYOUT

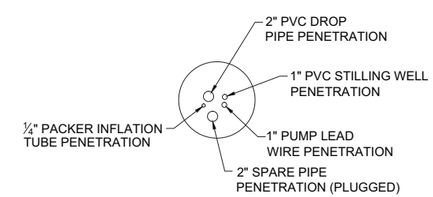

B DUAL SCREEN WELL FLANGE DETAIL

NO SCALE

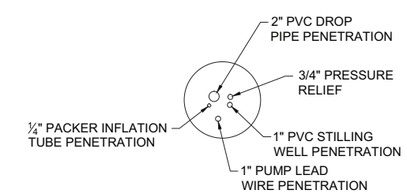

C EXTRACTION WELL PACKER DETAIL

NO SCALE

- DRAFT - NOT FOR CONSTRUCTION

ARCADIS

NO.	DATE	DESCRIPTION	GM/SPEC	DWN	CHKD	SUPV	APVD	BY
1	09/08/14	PRE-FINAL (90%) DESIGN		BEH	JPB	JPB	JEF	
0	04/05/13	INTERMEDIATE (60%) DESIGN		BEH	JPB	JPB	JEF	

REVISIONS

APPROVED BY JEF

SO
SUPV JPB
DSGN JPB
DWN BEH
CHKD JPB
OK JEF
DATE 09/08/14
SCALES AS NOTED

TOPOCK GROUNDWATER REMEDIATION PROJECT
INNER RECIRCULATION LOOP EXTRACTION WELL CONSTRUCTION DETAILS
GAS TRANSMISSION & DISTRIBUTION
PACIFIC GAS AND ELECTRIC COMPANY
SAN FRANCISCO, CALIFORNIA

MICROFILM
BILL OF MATL
DWG LIST
SUPSDS
SUPSD BY
SHEET NO. of SHEETS
M-05-01
REV 1

08/26/2014, 15:29, G:\Graphics\ARI\TOPOCK-01\Post 90%\Well Construction Details.dwg, Tab: M-05-01

N1808

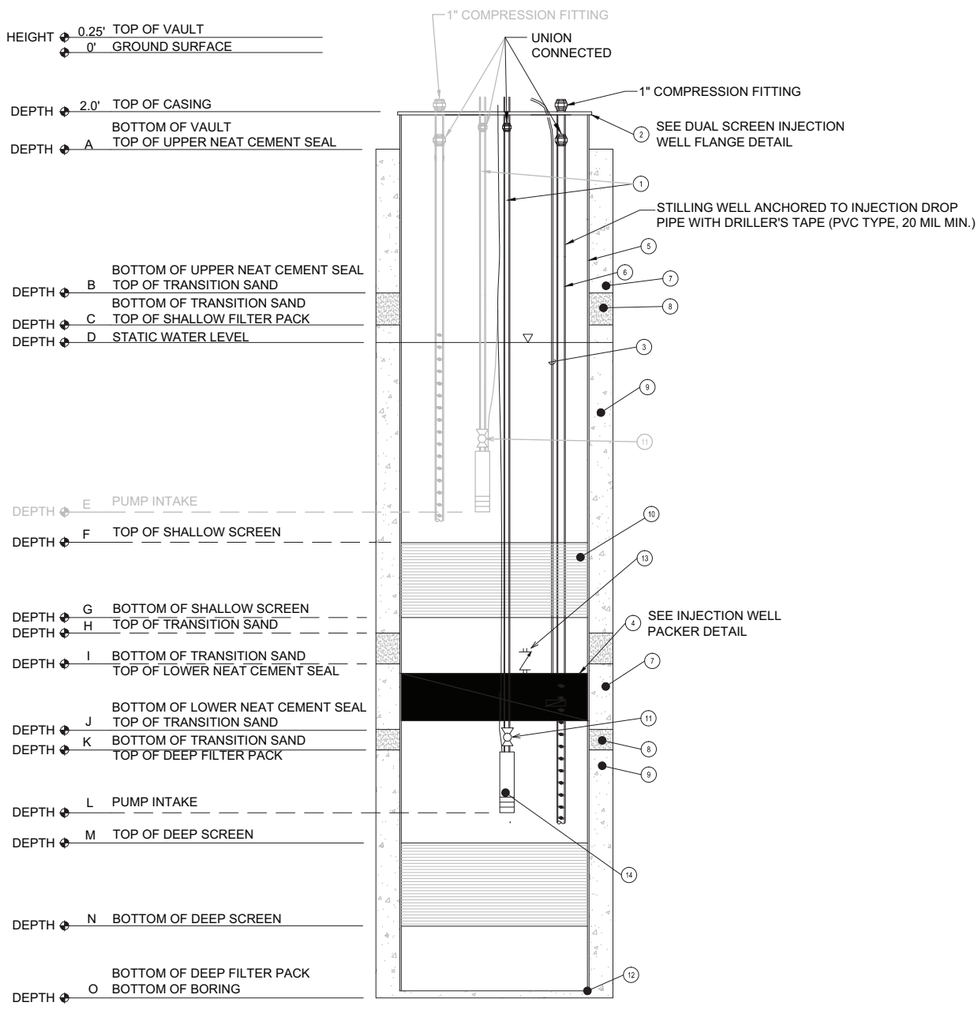

A IRL DUAL SCREEN INJECTION WELL WITH BACKWASH PUMP DETAIL

NO SCALE

SEE WELL CONSTRUCTION SCHEDULE SHEET M-X-01 FOR REPRESENTATIVE DEPTHS. WELL DIAMETER EXAGGERATED TO SHOW DETAIL.

1	2" 316 SS DROP PIPE
2	CUSTOM TAPPED WELL FLANGE
3	¼" DIAMETER HOSE FROM PACKER TO FILL ASSEMBLY
4	PNEUMATIC WELL PACKER
5	WELL CASING (316L SS)
6	1" PVC TUBING (STILLING WELL WITH PRESSURE TRANSDUCER)
7	ANNULAR SPACE, NEAT CEMENT GROUT WITH UP TO 6% BENTONITE
8	ANNULAR SPACE, TRANSITION SAND (SIZE TBD)
9	ANNULAR SPACE, FILTER PACK (TYPE TBD)
10	WELL SCREEN (316L SS, WIRE-WOUND)
11	ASR VALVE
12	SUMP
13	¾" PACKER PRESSURE RELIEF SAFETY VALVE
14	BACKWASH PUMP

NOTES:

1. ALL DEPTH INTERVALS 'A' THRU 'K' ARE IN FEET BELOW GROUND SURFACE.
2. ALL COORDINATES BASED ON NAD83, CA ZONE V.
3. ALL WELL SEALS ARE 100% NEAT CEMENT WITH UP TO 6% BENTONITE.
4. ALL ABOVE-GRADE PIPING AND INSTRUMENTATION INSTALLED IN ACCORDANCE WITH THE P&ID AND THE WELLHEAD MECHANICAL LAYOUT.

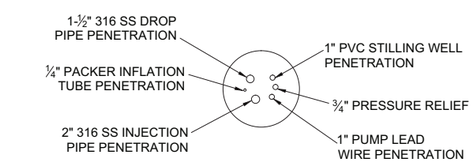

C INJECTION WELL PACKER DETAIL

NO SCALE

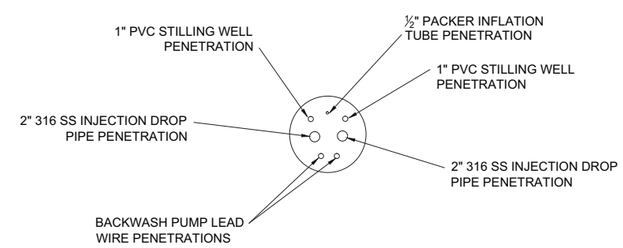

B IRL DUAL SCREEN WELL FLANGE DETAIL

NO SCALE

- DRAFT - NOT FOR CONSTRUCTION

ARCADIS

NO.	DATE	DESCRIPTION	GM/SPEC	DWN	CHKD	SUPV	APVD	BY
1	09/08/14	PRE-FINAL (90%) DESIGN		BEH	JPB	JPB	JEF	
0	04/05/13	INTERMEDIATE (60%) DESIGN		BEH	JPB	JPB	JEF	

REVISIONS

APPROVED BY JEF

SO	
SUPV	JPB
DSGN	JPB
DWN	BEH
CHKD	JPB
OK	JEF
DATE	09/08/14
SCALES	AS NOTED

TOPOCK GROUNDWATER REMEDIATION PROJECT

INNER RECIRCULATION LOOP TYPE 1 INJECTION WELL CONSTRUCTION DETAILS

GAS TRANSMISSION & DISTRIBUTION

PACIFIC GAS AND ELECTRIC COMPANY

SAN FRANCISCO, CALIFORNIA

MICROFILM

BILL OF MATL

DWG LIST

SUPSDS

SUPSD BY

SHEET NO. M-05-02 of SHEETS REV 1

08/26/2014, 15:29, G:\Graphics\ART\TOPOCK-01\Post 90%\Well Construction Details.dwg, Tab: M-05-02

N1808

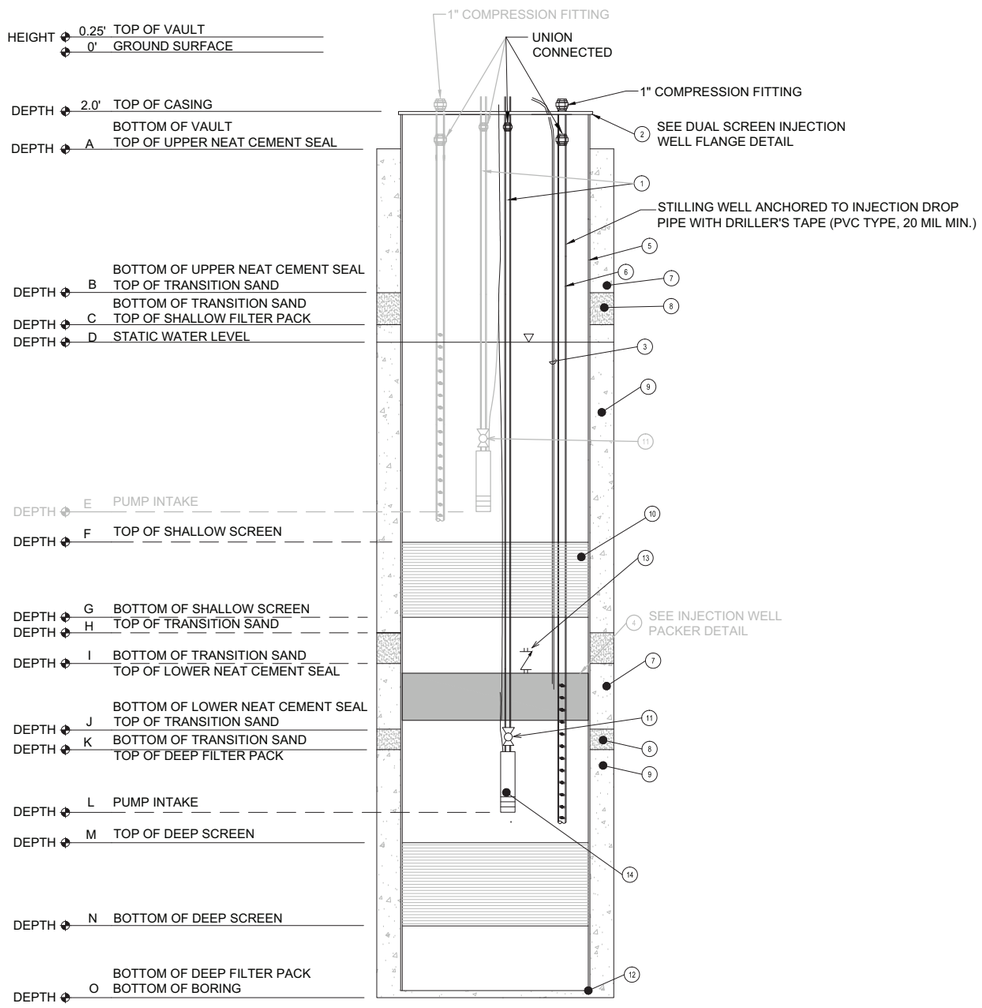

A IRL DUAL SCREEN INJECTION WELL WITH BACKWASH PUMP DETAIL

NO SCALE

SEE WELL CONSTRUCTION SCHEDULE SHEET M-X-01 FOR REPRESENTATIVE DEPTHS. WELL DIAMETER EXAGGERATED TO SHOW DETAIL.

1	2" 316 SS DROP PIPE
2	CUSTOM TAPPED WELL FLANGE
3	¼" DIAMETER HOSE FROM PACKER TO FILL ASSEMBLY
4	PNEUMATIC WELL PACKER
5	WELL CASING (316L SS)
6	1" PVC TUBING (STILLING WELL WITH PRESSURE TRANSDUCER)
7	ANNULAR SPACE, NEAT CEMENT GROUT WITH UP TO 6% BENTONITE
8	ANNULAR SPACE, TRANSITION SAND (SIZE TBD)
9	ANNULAR SPACE, FILTER PACK (TYPE TBD)
10	WELL SCREEN (316L SS, WIRE-WOUND)
11	ASR VALVE
12	SUMP
13	¾" PACKER PRESSURE RELIEF SAFETY VALVE
14	BACKWASH PUMP

NOTES:

1. ALL DEPTH INTERVALS 'A' THRU 'K' ARE IN FEET BELOW GROUND SURFACE.
2. ALL COORDINATES BASED ON NAD83, CA ZONE V.
3. ALL WELL SEALS ARE 100% NEAT CEMENT WITH UP TO 6% BENTONITE.
4. ALL ABOVE-GRADE PIPING AND INSTRUMENTATION INSTALLED IN ACCORDANCE WITH THE P&ID AND THE WELLHEAD MECHANICAL LAYOUT.

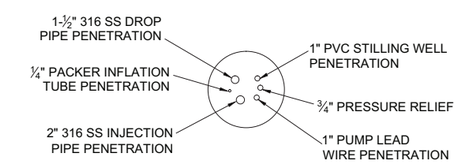

C INJECTION WELL PACKER DETAIL

NO SCALE

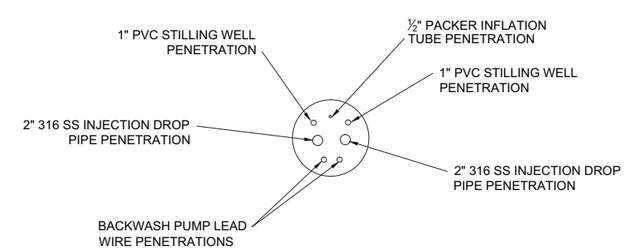

B IRL DUAL SCREEN WELL FLANGE DETAIL

NO SCALE

- DRAFT -
NOT FOR CONSTRUCTION

ARCADIS

NO.	DATE	DESCRIPTION	GM/SPEC	DWN	CHKD	SUPV	APVD BY
1	09/08/14	PRE-FINAL (90%) DESIGN		BEH	JPB	JPB	JEF
0	04/05/13	INTERMEDIATE (60%) DESIGN		BEH	JPB	JPB	JEF

REVISIONS

APPROVED BY: JEF

SO
SUPV JPB
DSGN JPB
DWN BEH
CHKD JPB
OK JEF
DATE 09/08/14
SCALES AS NOTED

TOPOCK GROUNDWATER REMEDIATION PROJECT
INNER RECIRCULATION LOOP TYPE 2 INJECTION WELL CONSTRUCTION DETAILS
GAS TRANSMISSION & DISTRIBUTION
PACIFIC GAS AND ELECTRIC COMPANY
SAN FRANCISCO, CALIFORNIA

MICROFILM
BILL OF MATL
DWG LIST
SUPSDS
SUPSD BY
SHEET NO. of SHEETS
M-05-03
REV 1

08/26/2014, 15:29, G:\Graphics\ARI\TOPOCK-01\Post 90%\Well Construction Details.dwg, Tab: M-05-03

N1808

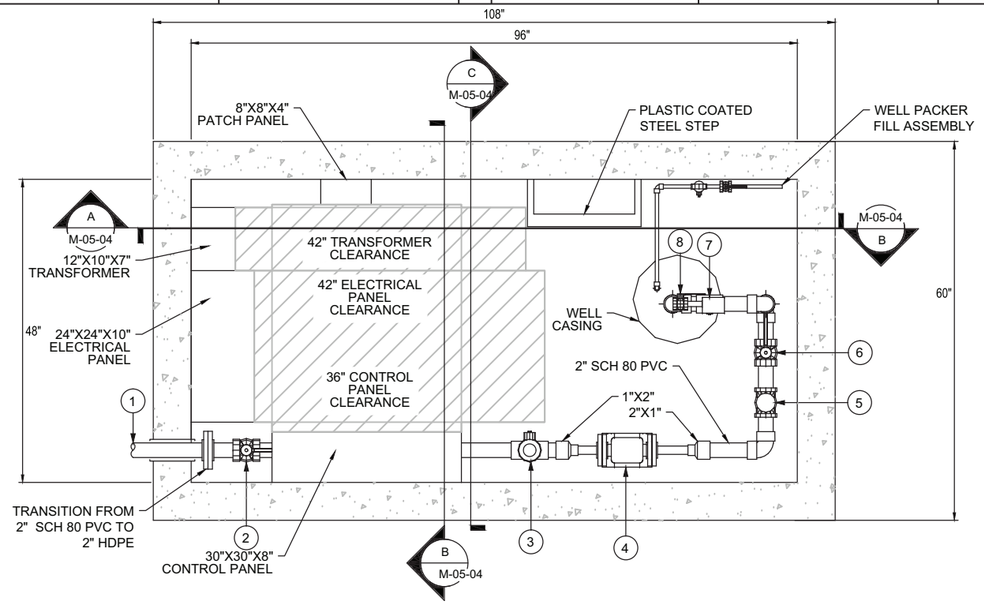

EXTRACTION WELL VAULT PLAN VIEW

1" = 1"-0"

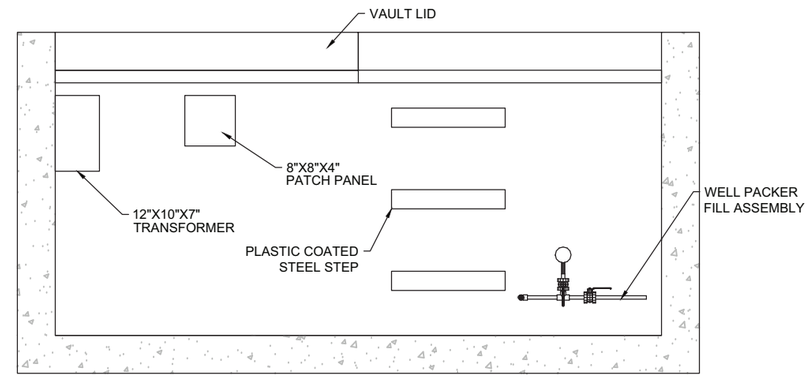

SECTION A

A M-05-04 — 1"=1'-0"

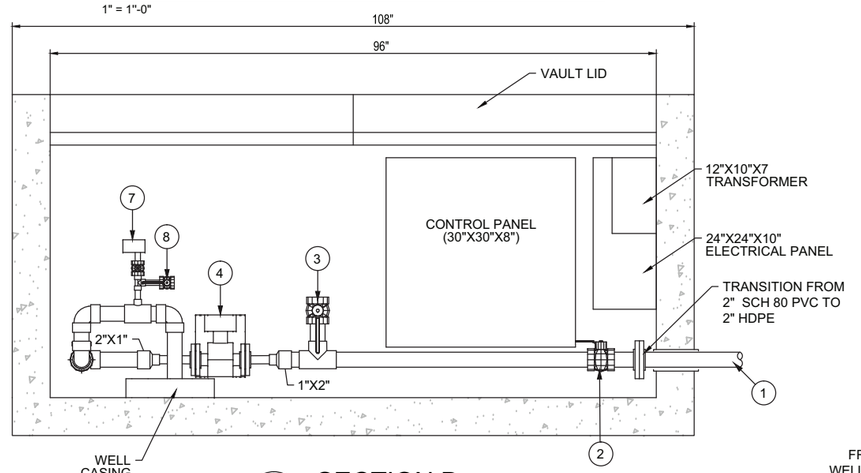

SECTION B

B M-05-04 — 1"=1'-0"

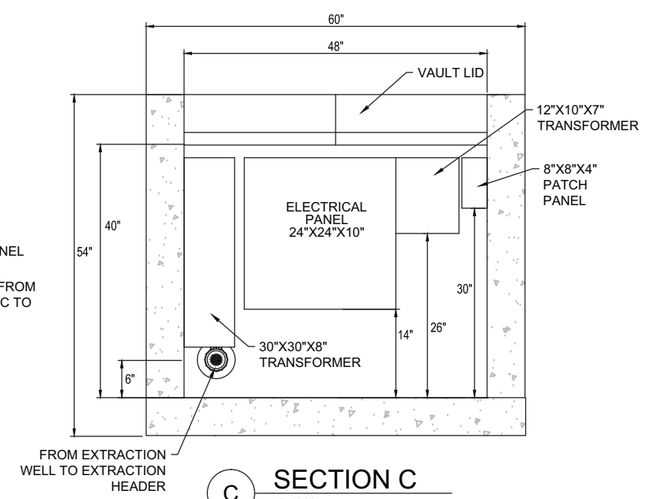

SECTION C

C M-05-04 — 1"=1'-0"

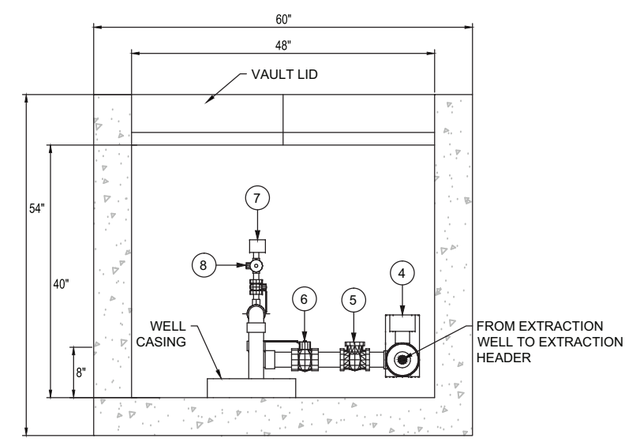

SECTION D

D M-5-04 — 1"=1'-0"

EXTRACTION WELL VAULT SCHEDULE

ITEM	PIPE SIZE	MATERIAL	PROCESS FLOW	DESCRIPTION	ID TAG
1	2"	HDPE	EXTRACTED GROUNDWATER	EXTRACTION WELL CONVEYANCE LINE	-
2	2"	PVC	EXTRACTED GROUNDWATER	ISOLATION BALL VALVE - EQUIPPED WITH STEM EXTENSION TO ALLOW FOR OPERATION FROM OUTSIDE THE VAULT	V-*601D
3	2"	PVC	EXTRACTED GROUNDWATER	BALL VALVE	V-*601A
4	1"	TEFLON	EXTRACTED GROUNDWATER	MAGNETIC FLOW METER	FM-*670A
5	2"	PVC	EXTRACTED GROUNDWATER	CHECK VALVE	V-*601C
6	2"	PVC	EXTRACTED GROUNDWATER	BALL VALVE	V-*601B
7	1/2"	TBD	EXTRACTED GROUNDWATER	PRESSURE TRANSMITTER ASSEMBLY	V-*622A, PIT-*660A
8	1/4"	TBD	EXTRACTED GROUNDWATER	SAMPLE PORT	V-*622B

NOTES:

1. ALL PIPING, INSTRUMENTATION, AND OTHER COMPONENTS SHALL BE INSTALLED AS PER THE MANUFACTURER'S GUIDELINES.
2. ALL PIPING AND INSTRUMENTATION SHALL BE INSTALLED PER P&IDs.
3. INSTALLATION OF ELECTRIC COMPONENTS SHALL COMPLY WITH ALL APPLICABLE NEC AND LOCAL CODES.
4. CROSS SECTIONS SHOW ONLY THOSE COMPONENTS NECESSARY TO INDICATE ELEVATIONS AND SPACE REQUIREMENTS FOR PIPING AND MAJOR COMPONENTS. INSTALL PIPING AND INSTRUMENTATION PER THE P&IDs.
5. ALL INSTRUMENTATION SHALL BE INSTALLED SUCH THAT IT MAY BE READ WITHOUT ENTERING THE WELL VAULT.
6. ALL VALVE HANDLES SHALL BE INSTALLED SUCH THAT THEY ARE ACCESSIBLE WITHOUT ENTERING THE WELL VAULT AND OPERABLE THROUGH ENTIRE STROKE.
7. ALL PIPING AND CONDUIT SHALL BE SECURED TO THE WALLS OF THE CONCRETE WELL VAULT WITH ANCHOR BOLTS AND UNI-STRUT. SUPPORTS SHALL BE INSTALLED WHEREVER NECESSARY TO PROPERLY SUPPORT PIPING AND CONDUIT.
8. PIPE SIZES AND MATERIALS ARE SHOWN ON THE P&IDs.
9. PIPING KNOCKOUTS AND ROUTING OF PIPING SHOWN AS PROPOSED AND APPROXIMATE. ACTUAL ROUTING TO BE FIELD DETERMINED AND IS SUBJECT TO ENGINEER'S APPROVAL.
10. ALL FLANGES SHALL BE CLASS 150 RATE FACE FLANGES UNLESS OTHERWISE SPECIFIED.
11. ALL TRANSITION FITTINGS FOR HDPE PIPING SHALL BE FLANGED WITH BACKING RINGS.

- DRAFT - NOT FOR CONSTRUCTION

ARCADIS

NO.	DATE	DESCRIPTION	GM/SPEC	DWN	CHKD	SUPV	APVD BY
1	09/08/14	PRE-FINAL (90%) DESIGN		LUK	KLD	JPB	JEF
0	04/05/13	INTERMEDIATE (60%) DESIGN		LUK	KLD	JPB	JEF

REVISIONS

APPROVED BY: JEF

SO
SUPV JPB
DSGN KLD
DWN LUK
CHKD JPB
OK JEF
DATE 09/08/14
SCALES 1" = 1'-0"

TOPOCK GROUNDWATER REMEDIATION PROJECT

INNER RECIRCULATION LOOP EXTRACTION WELL VAULT MECHANICAL DETAILS

GAS TRANSMISSION & DISTRIBUTION

PACIFIC GAS AND ELECTRIC COMPANY
SAN FRANCISCO, CALIFORNIA

MICROFILM
BILL OF MATL
DWG LIST
SUPSDS
SUPSD BY
SHEET NO. M-05-04 of SHEETS
REV 1

N1808

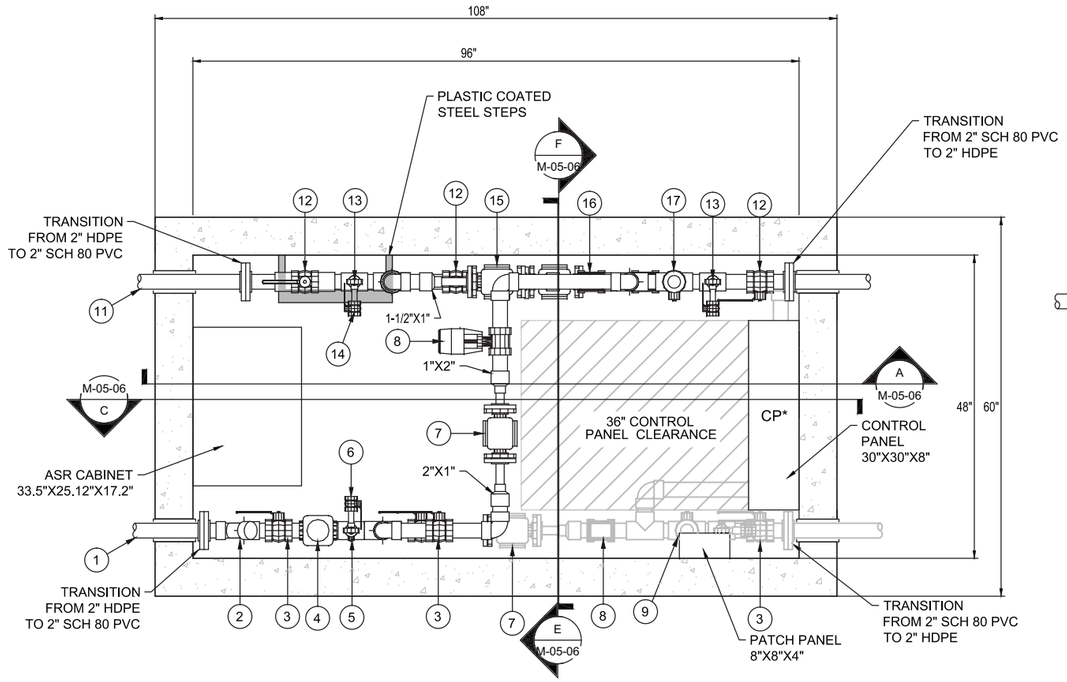

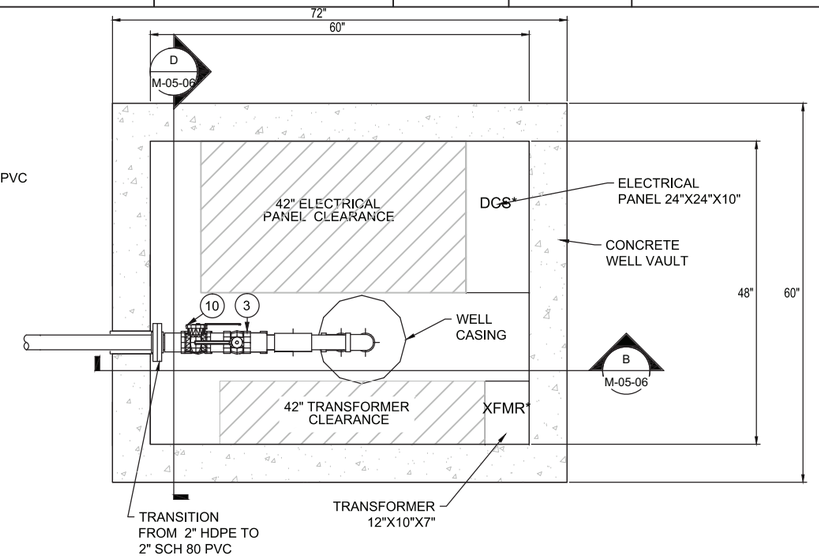

INJECTION WELL METERING AND WELL VAULT PLAN VIEW

1" = 1"-0"

INJECTION WELL VAULT SCHEDULE

ITEM	PIPE SIZE	MATERIAL	PROCESS FLOW	DESCRIPTION	ID TAG
1	2"	HDPE	CARBON AMENDED GROUNDWATER	CARBON AMENDED CONVEYANCE LINE	-
2	2"	PVC	CARBON AMENDED GROUNDWATER	WYE STRAINER	F-*619
3	2"	PVC	CARBON AMENDED GROUNDWATER	ISOLATION BALL VALVE EQUIPPED WITH STEM EXTENSION TO ALLOW FOR OPERATION FROM OUTSIDE OF VAULT	V-*602A, V-*604A
4	2"	PVC	CARBON AMENDED GROUNDWATER	BACK PRESSURE REGULATOR	V-*618
5	1/2"	TBD	CARBON AMENDED GROUNDWATER	PRESSURE GAUGE ASSEMBLY	V-*621B, PI-*661B
6	1/4"	PVC	CARBON AMENDED GROUNDWATER	SAMPLE PORT	V-*621A
7	1"	TEFLON	CARBON AMENDED GROUNDWATER	MAGNETIC FLOW METER	FM-*671A
8	2"	TBD	CARBON AMENDED GROUNDWATER	ACTUATED BALL VALVE	FV-*607
9	2"	TBD	CARBON AMENDED GROUNDWATER	AIR/VAC RELEASE ASSEMBLY	
10	2"	PVC	CARBON AMENDED GROUNDWATER	CHECK VALVE	V-*612
11	2"	HDPE	FRESH WATER	FRESH WATER CONVEYANCE LINE	-
12	2"	PVC	FRESH WATER	ISOLATION BALL VALVE EQUIPPED WITH STEM EXTENSION TO ALLOW FOR OPERATION FROM OUTSIDE OF VAULT	V-*603A, V-*602B, V-*611
13	1/2"	TBD	FRESH WATER	PRESSURE GAUGE ASSEMBLY	V-*621D, PI-*661A
14	1/4"	PVC	FRESH WATER	SAMPLE PORT	V-*621D
15	1"	TEFLON	FRESH WATER	MAGNETIC FLOW METER	FM-*671C
16	2"	TBD	FRESH WATER	ACTUATED BALL VALVE	FV-*608
17	2"	PVC	FRESH WATER	BALL VALVE	V-*620
18	2"	PVC	FRESH WATER	CHECK VALVE	V-*612
19	2"	PVC	BACKWASH WATER	CHECK VALVE	V-*616
20	2"	PVC	BACKWASH WATER	ACTUATED BALL VALVE	FV-*609

NOTES:
1. ALL PIPING, INSTRUMENTATION, AND OTHER COMPONENTS SHALL BE INSTALLED AS PER THE MANUFACTURER'S GUIDELINES.
2. ALL PIPING AND INSTRUMENTATION SHALL BE INSTALLED PER P&IDs.
3. INSTALLATION OF ELECTRIC COMPONENTS SHALL COMPLY WITH ALL APPLICABLE NEC AND LOCAL CODES.
4. CROSS SECTIONS SHOW ONLY THOSE COMPONENTS NECESSARY TO INDICATE ELEVATIONS AND SPACE REQUIREMENTS FOR PIPING AND MAJOR COMPONENTS. INSTALL PIPING AND INSTRUMENTATION PER THE P&IDs.
5. ALL INSTRUMENTATION SHALL BE INSTALLED SUCH THAT IT MAY BE READ WITHOUT ENTERING THE WELL VAULT.
6. ALL VALVE HANDLES SHALL BE INSTALLED SUCH THAT THEY ARE ACCESSIBLE WITHOUT ENTERING THE WELL VAULT AND OPERABLE THROUGH ENTIRE STROKE.
7. ALL PIPING AND CONDUIT SHALL BE SECURED TO THE WALLS OF THE CONCRETE WELL VAULT WITH ANCHOR BOLTS AND UNI-STRUT. SUPPORTS SHALL BE INSTALLED WHEREVER NECESSARY TO PROPERLY SUPPORT PIPING AND CONDUIT.
8. PIPE SIZES AND MATERIALS ARE SHOWN ON THE P&IDs.
9. PIPING KNOCKOUTS AND ROUTING OF PIPING SHOWN AS PROPOSED AND APPROXIMATE. ACTUAL ROUTING TO BE FIELD DETERMINED AND IS SUBJECT TO ENGINEER'S APPROVAL.
10. ALL FLANGES SHALL BE CLASS 150 RATE FACE FLANGES UNLESS OTHERWISE SPECIFIED.
11. ALL TRANSITION FITTINGS FOR HDPE PIPING SHALL BE FLANGED WITH BACKING RINGS.

- DRAFT -
NOT FOR CONSTRUCTION

ARCADIS

NO.	DATE	DESCRIPTION	GM/SPEC	DWN	CHKD	SUPV	APVD BY
1	09/08/14	PRE-FINAL (90%) DESIGN		LUK	KLD	JPB	JEF
0	04/05/13	INTERMEDIATE (60%) DESIGN		LUK	KLD	JPB	JEF

REVISIONS

APPROVED BY: JEF

SO
SUPV JPB
DSGN KLD
DWN LUK
CHKD JPB
OK JEF
DATE 09/08/14
SCALES 1" = 1'-0"

TOPOCK GROUNDWATER REMEDIATION PROJECT
INNER RECIRCULATION LOOP
INJECTION WELL VAULTS TYPE 1
MECHANICAL DETAILS
GAS TRANSMISSION & DISTRIBUTION
PACIFIC GAS AND ELECTRIC COMPANY
SAN FRANCISCO, CALIFORNIA

MICROFILM
BILL OF MATL
DWG LIST
SUPSDS
SUPSD BY
SHEET NO. of SHEETS
M-05-05
REV 1

N1808

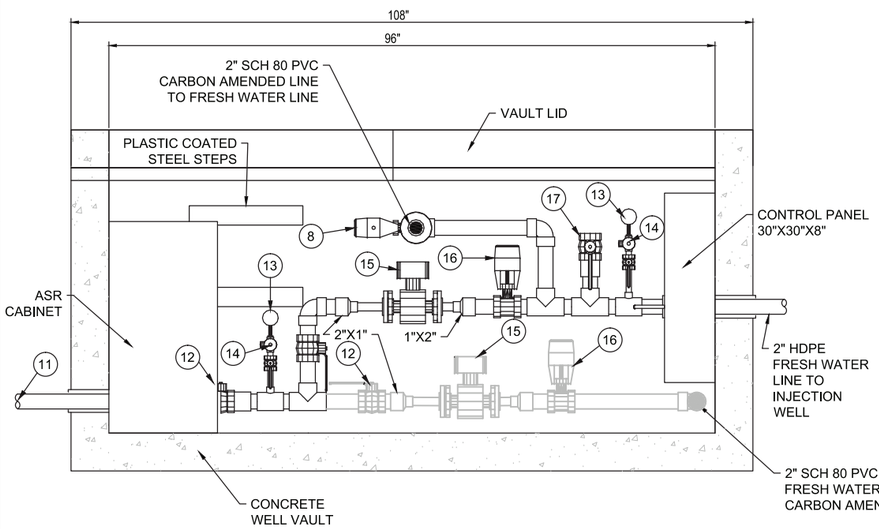

A SECTION A
1"=1'-0"
M-05-05

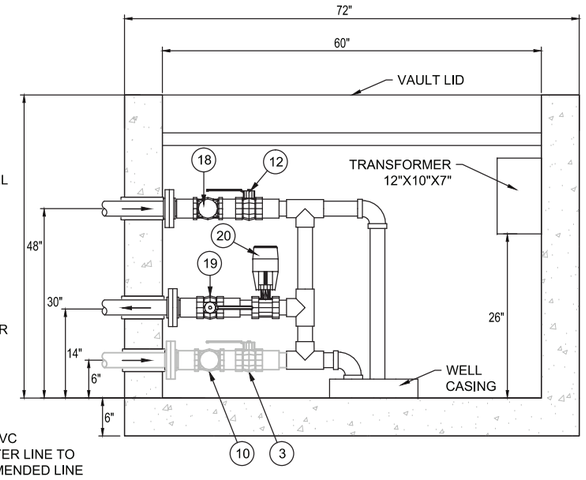

B SECTION B
1"=1'-0"
M-05-05

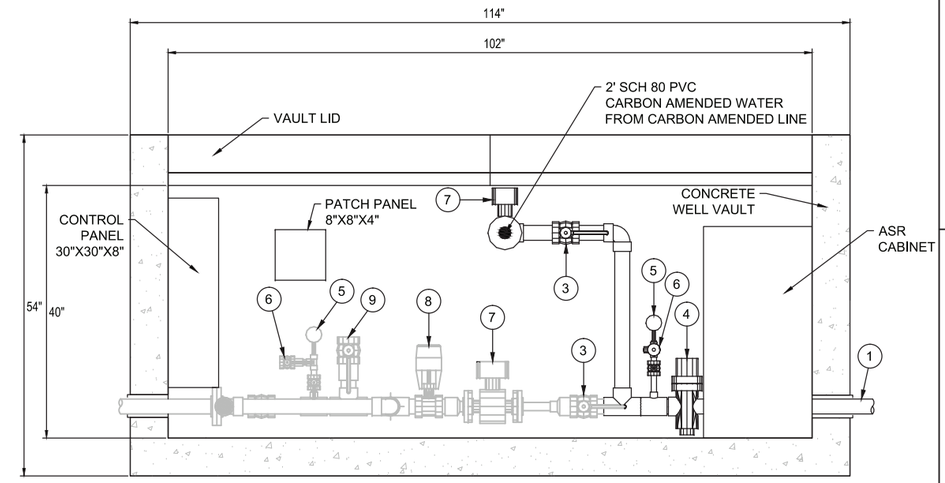

C SECTION C
1"=1'-0"
M-05-05

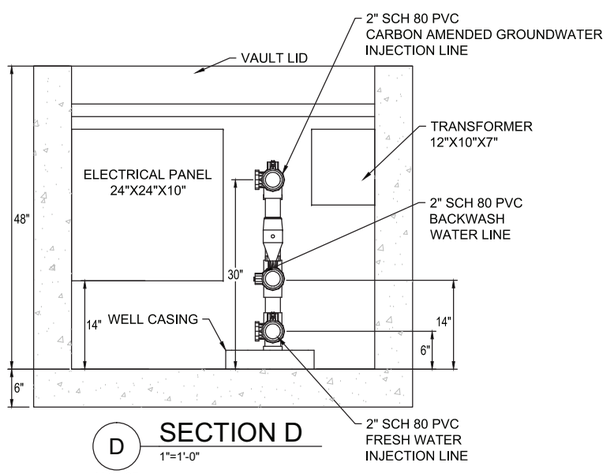

D SECTION D
1"=1'-0"
M-05-05

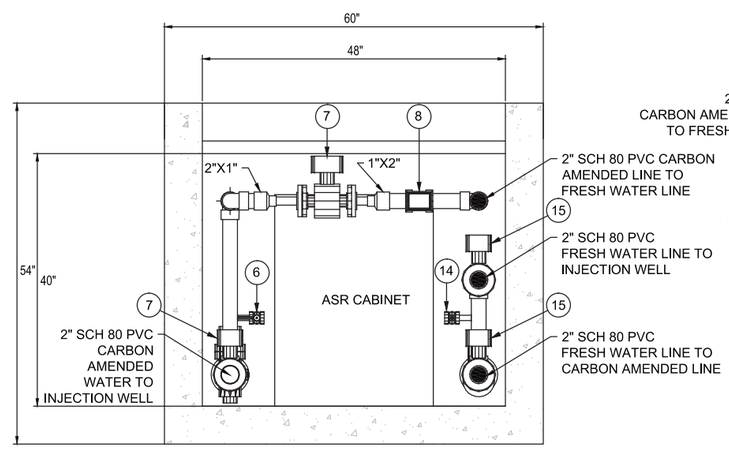

E SECTION E
1"=1'-0"
M-05-05

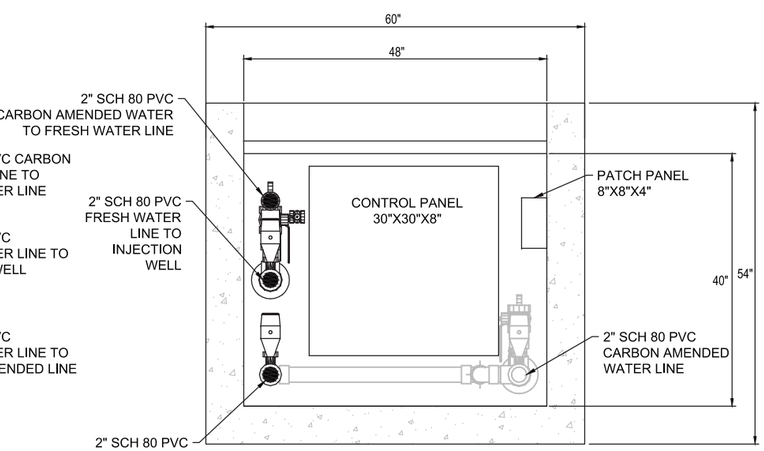

F SECTION F
1"=1'-0"
M-05-05

- DRAFT -
NOT FOR
CONSTRUCTION

ARCADIS

NO.	DATE	DESCRIPTION	GM/SPEC	DWN	CHKD	SUPV	APVD BY
1	09/08/14	PRE-FINAL (90%) DESIGN		LUK	KLD	JPB	JEF
0	04/05/13	INTERMEDIATE (60%) DESIGN		LUK	KLD	JPB	JEF

REVISIONS

APPROVED BY: JEF

SO	
SUPV	JPB
DSGN	KLD
DWN	LUK
CHKD	JPB
OK	JEF
DATE	09/08/14
SCALES	1" = 1'-0"

TOPOCK GROUNDWATER REMEDIATION PROJECT
INNER RECIRCULATION LOOP
INJECTION WELL VAULT TYPE 1
MECHANICAL SECTIONS
GAS TRANSMISSION & DISTRIBUTION
PACIFIC GAS AND ELECTRIC COMPANY
SAN FRANCISCO, CALIFORNIA

MICROFILM
BILL OF MATL
DWG LIST
SUPSDS
SUPSD BY
SHEET NO. of SHEETS
M-05-06
REV 1

N1808

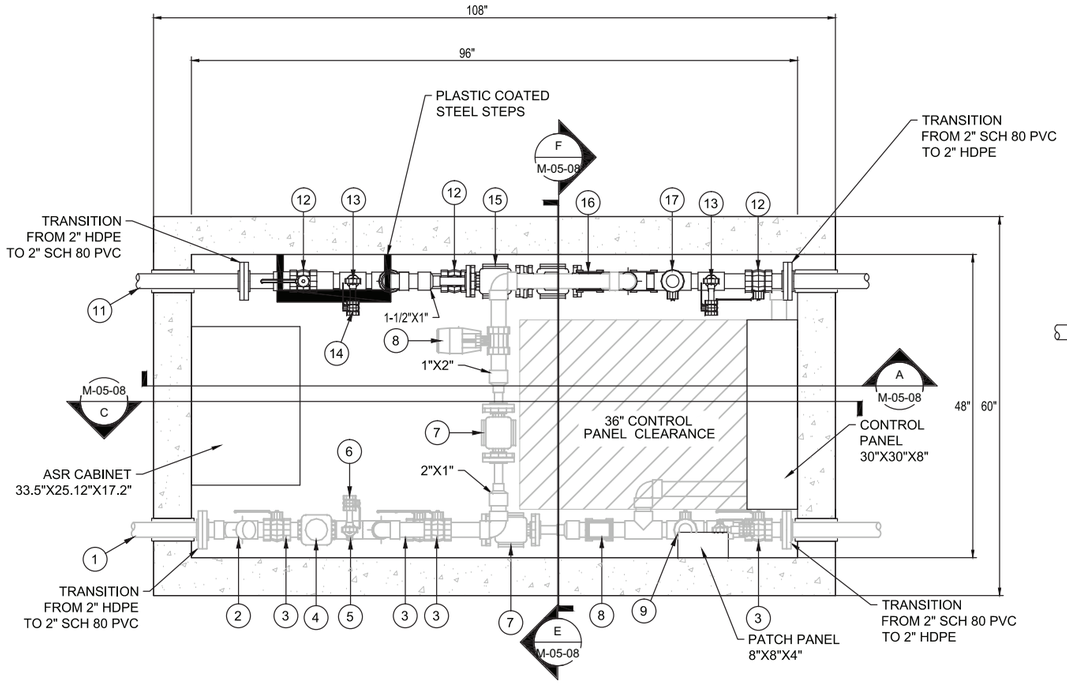

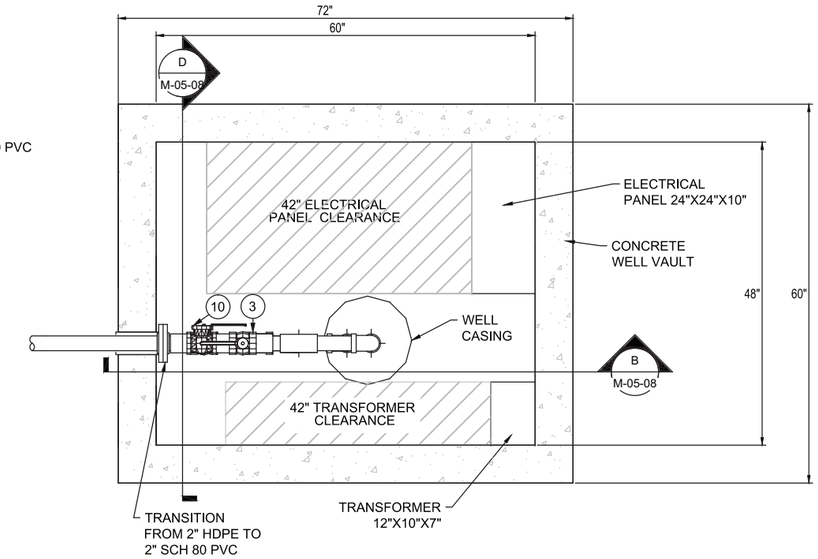

INJECTION WELL METERING AND WELL VAULT PLAN VIEW

1" = 1'-0"

INJECTION WELL VAULT SCHEDULE

ITEM	PIPE SIZE	MATERIAL	PROCESS FLOW	DESCRIPTION	ID TAG
1	2"	HDPE	CARBON AMENDED GROUNDWATER	CARBON AMENDED CONVEYANCE LINE	
2	2"	PVC	CARBON AMENDED GROUNDWATER	WYE STRAINER	
3	2"	PVC	CARBON AMENDED GROUNDWATER	ISOLATION BALL VALVE EQUIPPED WITH STEM EXTENSION TO ALLOW FOR OPERATION FROM OUTSIDE OF VAULT	
4	2"	PVC	CARBON AMENDED GROUNDWATER	BACK PRESSURE REGULATOR	
5	1/2"	TBD	CARBON AMENDED GROUNDWATER	PRESSURE GAUGE	
6	1/4"	PVC	CARBON AMENDED GROUNDWATER	SAMPLE PORT	
7	1"	TEFLON	CARBON AMENDED GROUNDWATER	MAGNETIC FLOW METER	
8	2"	TBD	CARBON AMENDED GROUNDWATER	ACTUATED BALL VALVE	
9	2"	TBD	CARBON AMENDED GROUNDWATER	AIR/VAC RELEASE ASSEMBLY	
10	2"	PVC	CARBON AMENDED GROUNDWATER	CHECK VALVE	
11	2"	HDPE	FRESH WATER	FRESH WATER CONVEYANCE LINE	-
12	2"	PVC	FRESH WATER	ISOLATION BALL VALVE EQUIPPED WITH STEM EXTENSION TO ALLOW FOR OPERATION FROM OUTSIDE OF VAULT	V-*602B, V-*603A, V-*611
13	1/2"	TBD	FRESH WATER	PRESSURE GAUGE ASSEMBLY	V-*621D, PI-*661A
14	1/4"	PVC	FRESH WATER	SAMPLE PORT	V-*621C
15	1"	TEFLON	FRESH WATER	MAGNETIC FLOW METER	FM-*671C
16	2"	TBD	FRESH WATER	ACTUATED BALL VALVE	FV-*608
17	2"	PVC	FRESH WATER	BALL VALVE	V-*620
18	2"	PVC	FRESH WATER	CHECK VALVE	V-*612
19	2"	PVC	BACKWASH WATER	CHECK VALVE	V-*616
20	2"	PVC	BACKWASH WATER	ACTUATED BALL VALVE	FV-*609

NOTES:
1. ALL PIPING, INSTRUMENTATION, AND OTHER COMPONENTS SHALL BE INSTALLED AS PER THE MANUFACTURER'S GUIDELINES.
2. ALL PIPING AND INSTRUMENTATION SHALL BE INSTALLED PER P&IDs.
3. INSTALLATION OF ELECTRIC COMPONENTS SHALL COMPLY WITH ALL APPLICABLE NEC AND LOCAL CODES.
4. CROSS SECTIONS SHOW ONLY THOSE COMPONENTS NECESSARY TO INDICATE ELEVATIONS AND SPACE REQUIREMENTS FOR PIPING AND MAJOR COMPONENTS. INSTALL PIPING AND INSTRUMENTATION PER THE P&IDs.
5. ALL INSTRUMENTATION SHALL BE INSTALLED SUCH THAT IT MAY BE READ WITHOUT ENTERING THE WELL VAULT.
6. ALL VALVE HANDLES SHALL BE INSTALLED SUCH THAT THEY ARE ACCESSIBLE WITHOUT ENTERING THE WELL VAULT AND OPERABLE THROUGH ENTIRE STROKE.
7. ALL PIPING AND CONDUIT SHALL BE SECURED TO THE WALLS OF THE CONCRETE WELL VAULT WITH ANCHOR BOLTS AND UNI-STRUT. SUPPORTS SHALL BE INSTALLED WHEREVER NECESSARY TO PROPERLY SUPPORT PIPING AND CONDUIT.
8. PIPE SIZES AND MATERIALS ARE SHOWN ON THE P&IDs.
9. PIPING KNOCKOUTS AND ROUTING OF PIPING SHOWN AS PROPOSED AND APPROXIMATE. ACTUAL ROUTING TO BE FIELD DETERMINED AND IS SUBJECT TO ENGINEER'S APPROVAL.
10. ALL FLANGES SHALL BE CLASS 150 RATE FACE FLANGES UNLESS OTHERWISE SPECIFIED.
11. ALL TRANSITION FITTINGS FOR HDPE PIPING SHALL BE FLANGED WITH BACKING RINGS.

- DRAFT -
NOT FOR CONSTRUCTION

ARCADIS

NO.	DATE	DESCRIPTION	GM/SPEC	DWN	CHKD	SUPV	APVD BY
1	09/08/14	PRE-FINAL (90%) DESIGN		LUK	KLD	JPB	JEF
0	04/05/13	INTERMEDIATE (60%) DESIGN		LUK	KLD	JPB	JEF

REVISIONS

APPROVED BY: JEF

SO
SUPV JPB
DSGN KLD
DWN LUK
CHKD JPB
OK JEF
DATE 09/08/14
SCALES 1" = 1'-0"

TOPOCK GROUNDWATER REMEDIATION PROJECT
INNER RECIRCULATION LOOP
INJECTION WELL VAULTS TYPE 2
MECHANICAL DETAILS
GAS TRANSMISSION & DISTRIBUTION
PACIFIC GAS AND ELECTRIC COMPANY
SAN FRANCISCO, CALIFORNIA

MICROFILM
BILL OF MATL
DWG LIST
SUPSDS
SUPSD BY
SHEET NO. of SHEETS
M-05-07
REV 1

N1808

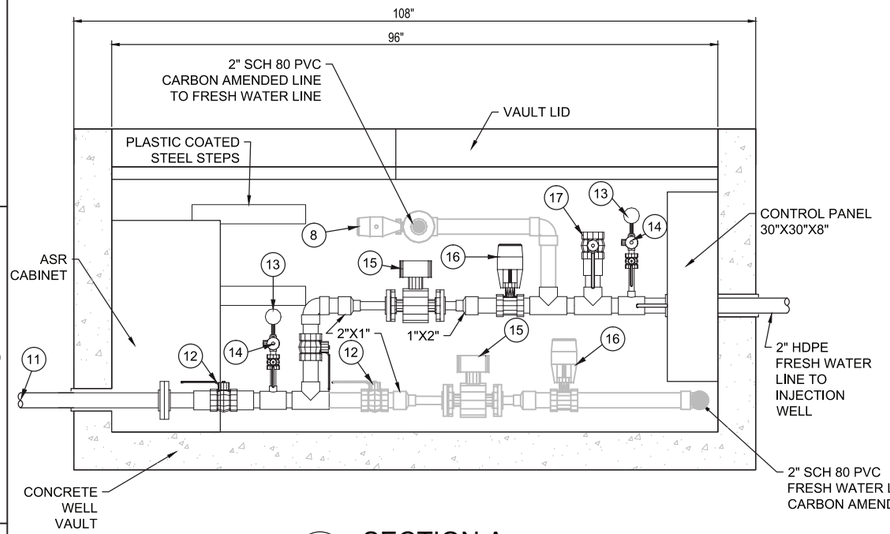

A SECTION A
1"=1'-0"
M-05-07

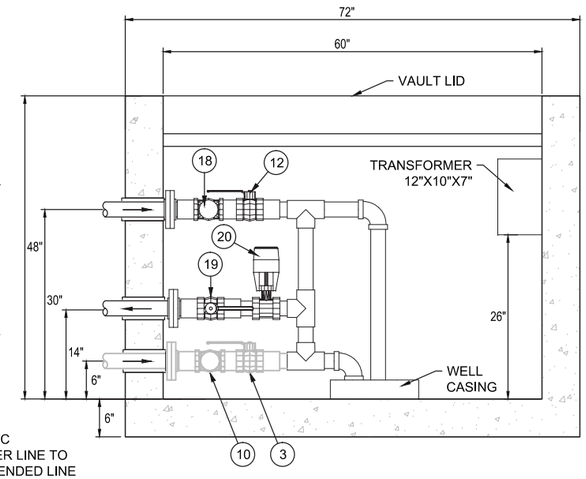

B SECTION B
1"=1'-0"
M-05-07

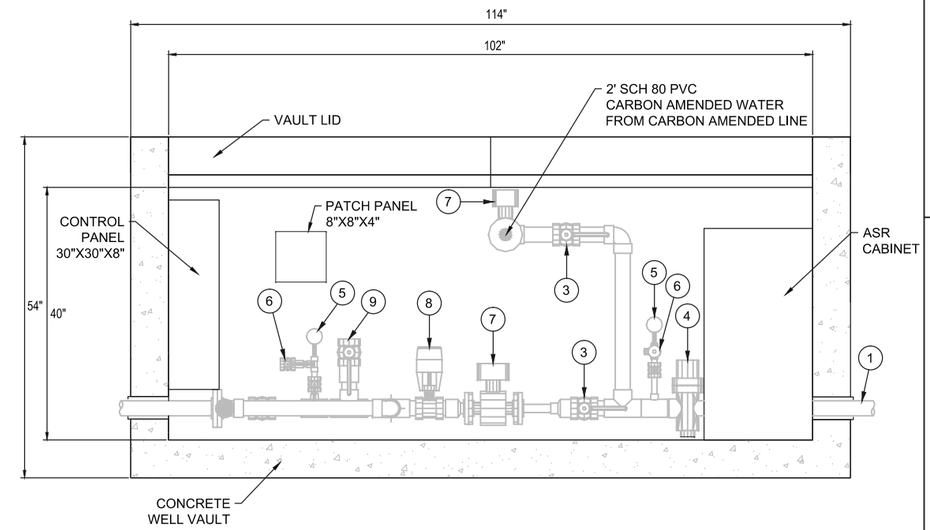

C SECTION C
1"=1'-0"
M-05-07

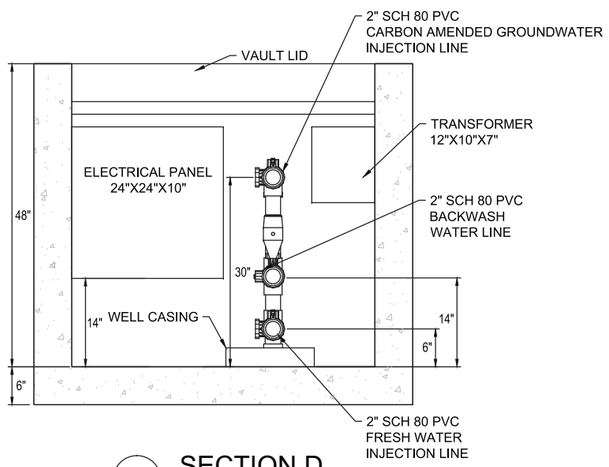

D SECTION D
1"=1'-0"
M-05-07

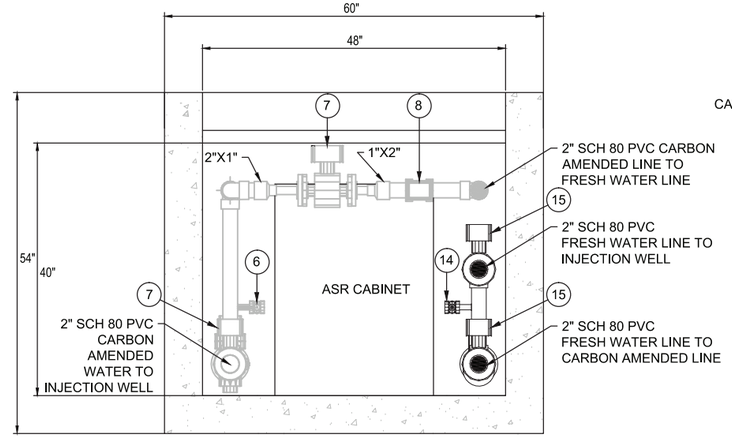

E SECTION E
1"=1'-0"
M-05-07

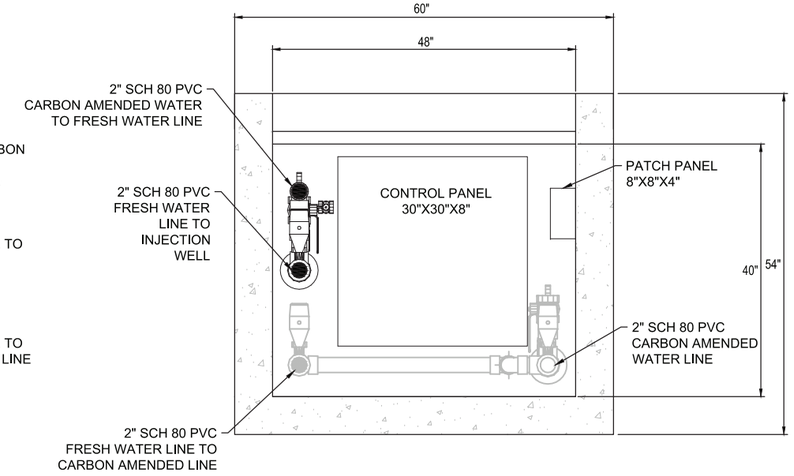

F SECTION F
1"=1'-0"
M-05-07

- DRAFT -
NOT FOR
CONSTRUCTION

ARCADIS

NO.	DATE	DESCRIPTION	GM/SPEC	DWN	CHKD	SUPV	APVD	BY
1	09/08/14	PRE-FINAL (90%) DESIGN		LUK	KLD	JPB	JEF	
0	04/05/13	INTERMEDIATE (60%) DESIGN		LUK	KLD	JPB	JEF	

REVISIONS

APPROVED BY: JEF

SO	
SUPV	JPB
DSGN	KLD
DWN	LUK
CHKD	JPB
OK	JEF
DATE	09/08/14
SCALES	1" = 1'-0"

TOPOCK GROUNDWATER REMEDIATION PROJECT
INNER RECIRCULATION LOOP
INJECTION WELL VAULT TYPE 2
MECHANICAL SECTIONS
GAS TRANSMISSION & DISTRIBUTION
PACIFIC GAS AND ELECTRIC COMPANY
SAN FRANCISCO, CALIFORNIA

MICROFILM
BILL OF MATL
DWG LIST
SUPSDS
SUPSD BY
SHEET NO. of SHEETS
M-05-08
REV 1

N18808

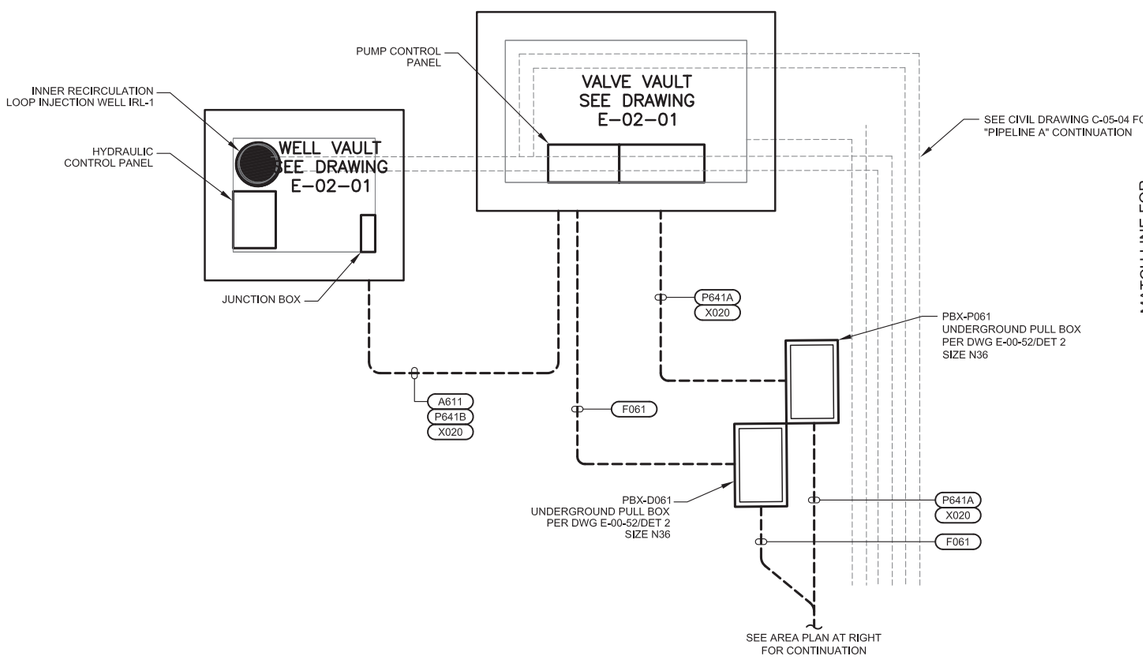

INNER RECIRCULATION LOOP INJECTION WELL IRL-1 ELECTRICAL SITE PLAN

0 2.6 5.2 7.8

SCALE: 3/8"=1'

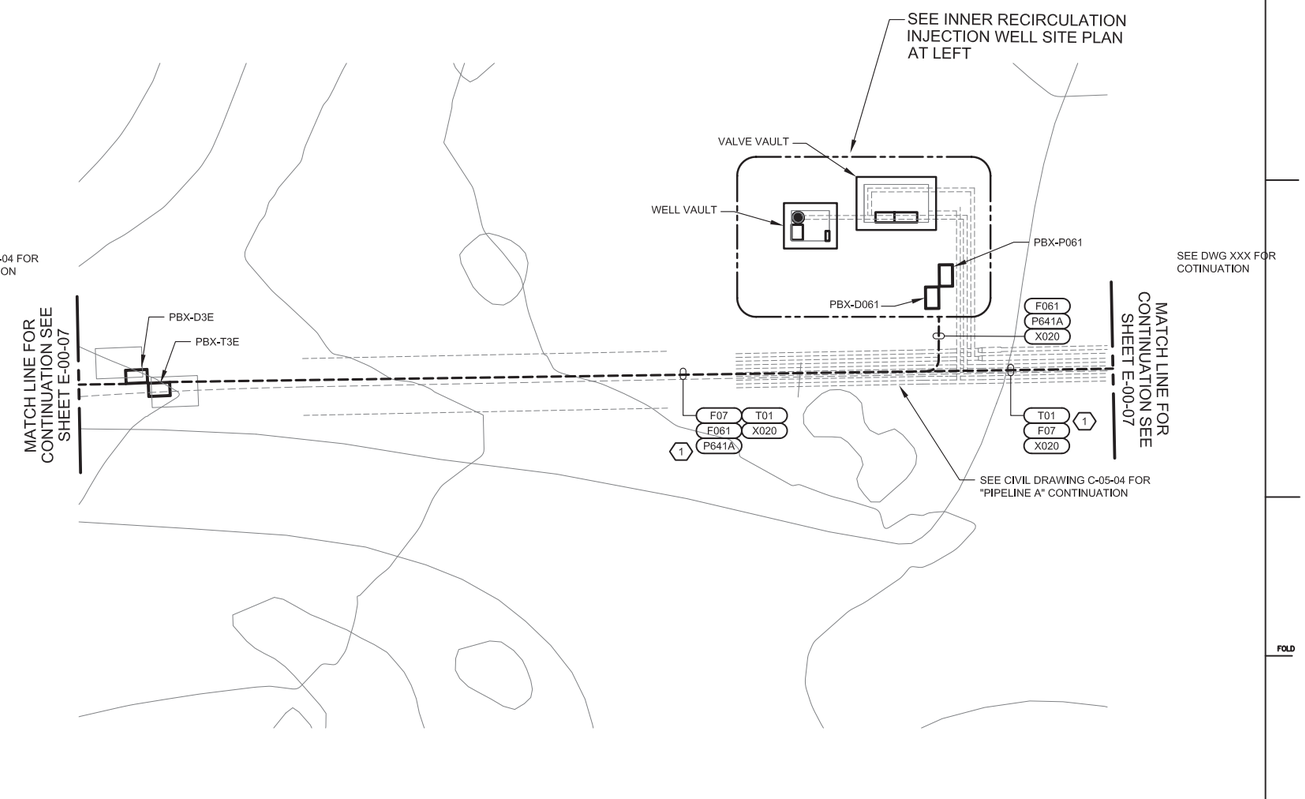

INNER RECIRCULATION LOOP INJECTION WELL IRL-1 AREA PLAN

0 10 20 30

SCALE: 1"=10'

ELECTRICAL PLAN NOTES:

1. SEE ELECTRICAL PLAN NOTES ON DRAWING E-00-02.

ELECTRICAL PLAN NOTES:

1. SEE ELECTRICAL PLAN NOTES ON DRAWING E-00-02.

DRAWING REFERENCED NOTES:

1. CONDUIT ROUTE AND PULLBOX LOCATIONS SHOWN ARE APPROXIMATE. COORDINATE CONDUIT ROUTE AND PULLBOX LOCATIONS WITH CIVIL PIPELINE ROUTING. SEE DRAWINGS C-05-04.

DRAFT
NOT FOR
CONSTRUCTION

FRISCH ENGINEERING, INC.
CONSULTING ELECTRICAL ENGINEERS
13405 FOLSOM BLVD, UNIT 600
FOLSOM, CA 95630
PH 916 353 1025
WWW.FRISCHENGINEERING.COM

CH2MHILL®

NO.	DATE	DESCRIPTION	GM/SPEC	DWN	CHKD	SUPV	APVD BY
1	9/8/14	PRE-FINAL (90%) DESIGN		MBY			TPF
0	4/5/13	INTERMEDIATE (60%) DESIGN		MBY			TPF

REVISIONS

APPROVED BY: TPF
SO
SUPV TPF
DSGN MBY
DWN MBY, NC
CHKD MF
OK TPF
DATE
SCALES N/A

TOPOCK GROUNDWATER REMEDIATION PROJECT
INNER RECIRCULATION LOOP INJECTION WELL IRL-1 SITE PLAN
GAS TRANSMISSION & DISTRIBUTION
PACIFIC GAS AND ELECTRIC COMPANY
SAN FRANCISCO, CALIFORNIA

MICROFILM
BILL OF MATL
DWG LIST
SUPSDS
SUPSD BY
SHEET NO. of SHEETS
E-05-01
REV 1

PLOT DATE: Aug 26, 2014 PLOT TIME: 9:50:19am
FILENAME: FE-E-XXX-0501AD.dwg

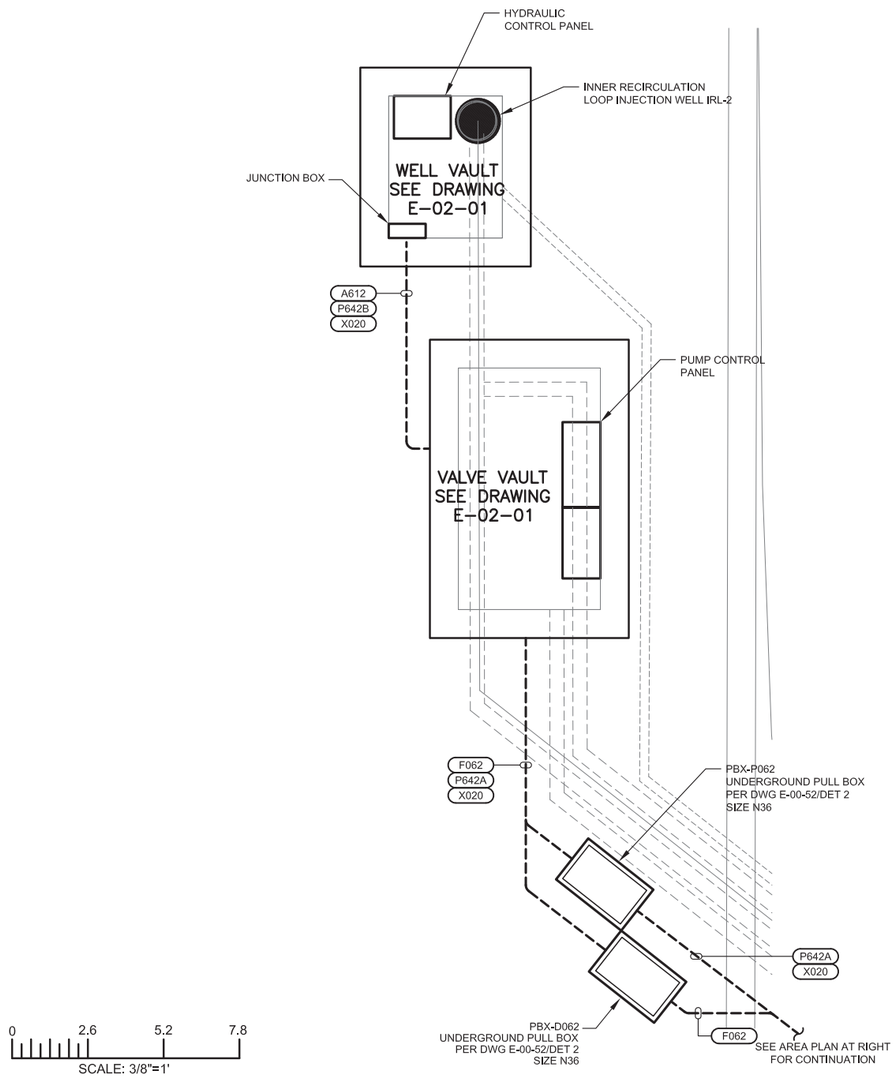

INNER RECIRCULATION LOOP INJECTION WELL IRL-2 ELECTRICAL SITE PLAN

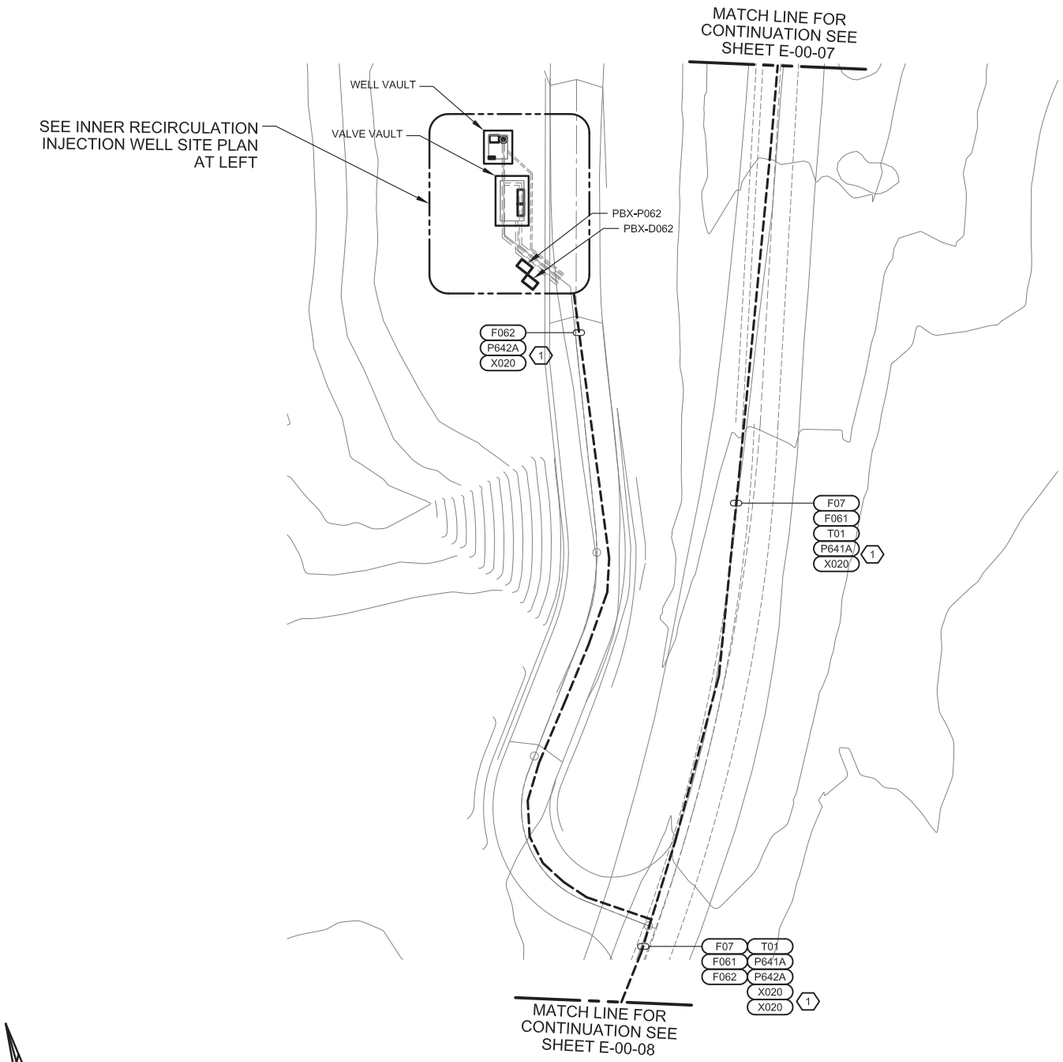

INNER RECIRCULATION LOOP INJECTION WELL IRL-2 AREA PLAN

0 16 32 48
SCALE: 1"=16'

ELECTRICAL PLAN NOTES:

1. SEE ELECTRICAL PLAN NOTES ON DRAWING E-00-02.

ELECTRICAL PLAN NOTES:

1. SEE ELECTRICAL PLAN NOTES ON DRAWING E-00-02.

DRAWING REFERENCED NOTES:

1. CONDUIT ROUTE AND PULLBOX LOCATIONS SHOWN ARE APPROXIMATE. COORDINATE CONDUIT ROUTE AND PULLBOX LOCATIONS WITH CIVIL PIPELINE ROUTING. SEE DRAWINGS C-05-03 & C-05-05.

DRAFT NOT FOR CONSTRUCTION

FRISCH ENGINEERING, INC.
CONSULTING ELECTRICAL ENGINEERS
13405 FOLSOM BLVD, UNIT 600
FOLSOM, CA 95630
PH 916 353 1025
WWW.FRISCHENGINEERING.COM

CH2MHILL®

NO.	DATE	DESCRIPTION	GM/SPEC	DWN	CHKD	SUPV	APVD BY
1	9/8/14	PRE-FINAL (90%) DESIGN		MBY			TPF
0	4/5/13	INTERMEDIATE (60%) DESIGN		MBY			TPF

REVISIONS

APPROVED BY	
TPF	SO
	SUPV TPF
	DSGN MBY
	DWN MBY, NC
	CHKD MF
	OK TPF
	DATE
	SCALES N/A

TOPOCK GROUNDWATER REMEDIATION PROJECT
INNER RECIRCULATION LOOP INJECTION WELL IRL-2 SITE PLAN
GAS TRANSMISSION & DISTRIBUTION
PACIFIC GAS AND ELECTRIC COMPANY
SAN FRANCISCO, CALIFORNIA

MICROFILM
BILL OF MATL
DWG LIST
SUPSDS
SUPSD BY
SHEET NO. of SHEETS
E-05-02
REV 1

FILENAME: FE-E-XXX-0501AD.dwg
PLOT DATE: Aug 26, 2014 PLOT TIME: 9:50:42am

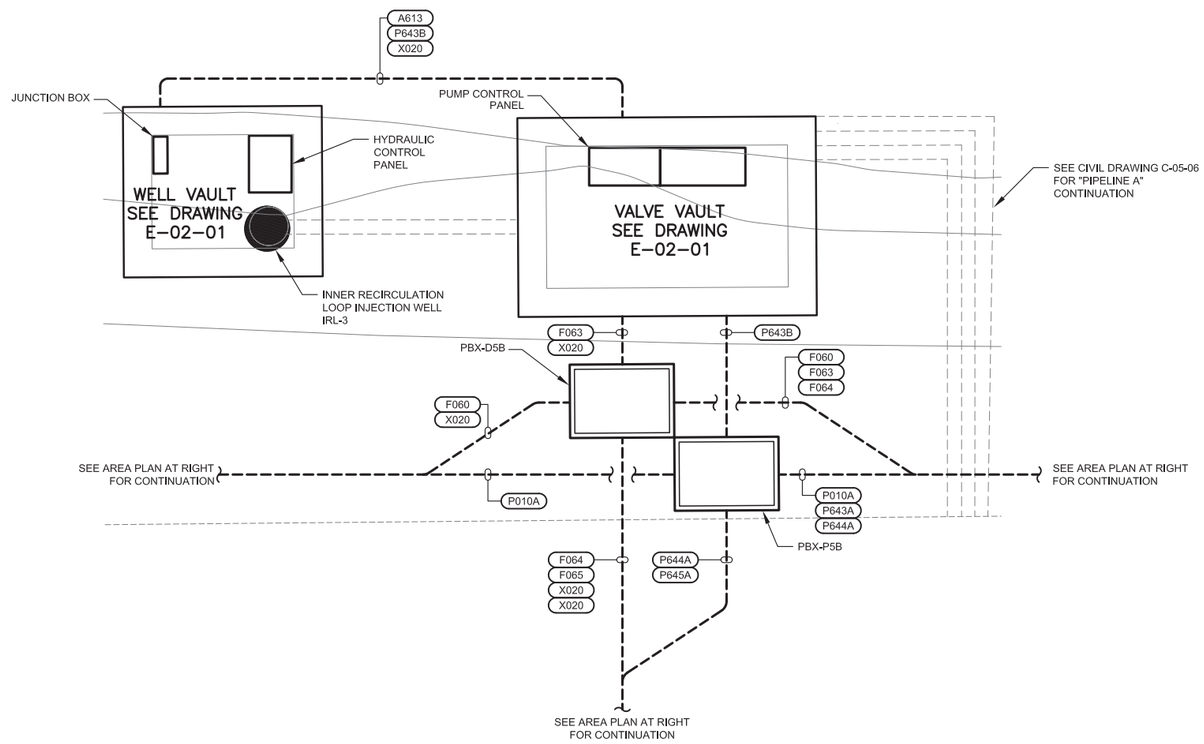

INNER RECIRCULATION LOOP INJECTION WELL IRL-3 ELECTRICAL SITE PLAN

0 2.6 5.2 7.8

SCALE: 3/8"=1'

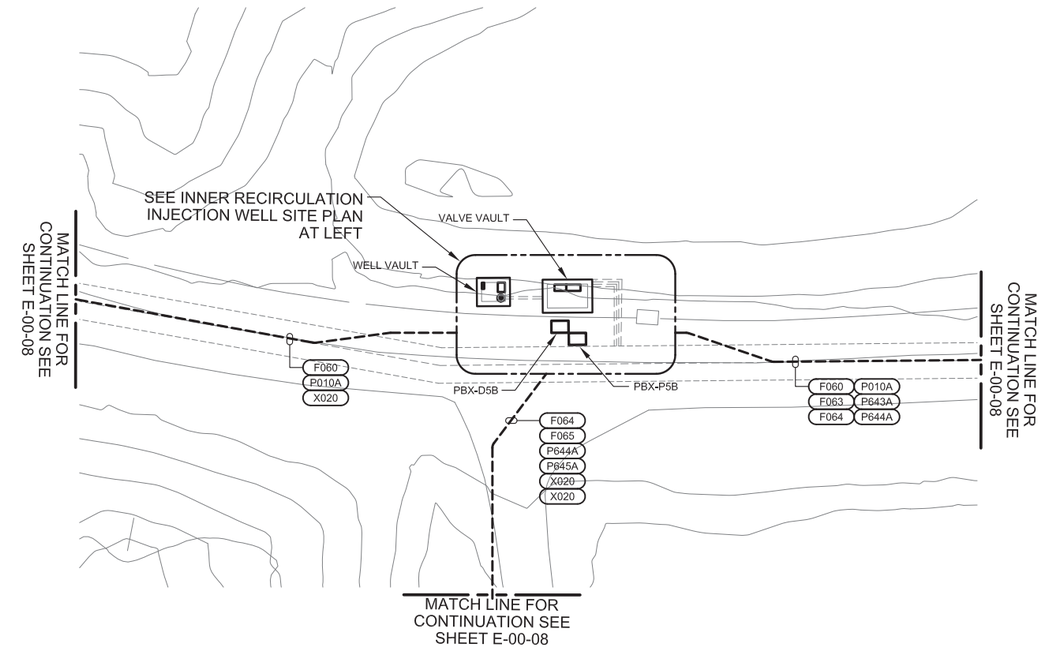

INNER RECIRCULATION LOOP INJECTION WELL IRL-3 ELECTRICAL AREA PLAN

0 16 32 48

SCALE: 1"=16'

ELECTRICAL PLAN NOTES:

1. SEE ELECTRICAL PLAN NOTES ON DRAWING E-00-02.

ELECTRICAL PLAN NOTES:

1. SEE ELECTRICAL PLAN NOTES ON DRAWING E-00-02.

DRAWING REFERENCED NOTES:

(1) CONDUIT ROUTE AND PULLBOX LOCATIONS SHOWN ARE APPROXIMATE. COORDINATE CONDUIT ROUTE AND PULLBOX LOCATIONS WITH CIVIL PIPELINE ROUTING, SEE DRAWINGS C-05-06.

DRAFT
NOT FOR
CONSTRUCTION

FRISCH ENGINEERING, INC.
CONSULTING ELECTRICAL ENGINEERS
13405 FOLSOM BLVD, UNIT 600
FOLSOM, CA 95630
PH 916 353 1025
WWW.FRISCHENGINEERING.COM

CH2MHILL®

NO.	DATE	DESCRIPTION	GM/SPEC	DWN	CHKD	SUPV	APVD BY
1	9/8/14	PRE-FINAL (90%) DESIGN		MBY			TPF
0	4/5/13	INTERMEDIATE (60%) DESIGN		MBY			TPF

REVISIONS

APPROVED BY: TPF

SO	
SUPV	TPF
DSGN	MBY
DWN	MBY, NC
CHKD	MF
OK	TPF
DATE	
SCALES	N/A

TOPOCK GROUNDWATER REMEDIATION PROJECT
INNER RECIRCULATION LOOP INJECTION WELL IRL-3 SITE PLAN
GAS TRANSMISSION & DISTRIBUTION
PACIFIC GAS AND ELECTRIC COMPANY
SAN FRANCISCO, CALIFORNIA

MICROFILM	
BILL OF MATL	
DWG LIST	
SUPSDS	
SUPSD BY	
SHEET NO. of	SHEETS
E-05-03	REV 1

PLOT DATE: Aug 26, 2014 PLOT TIME: 9:51:04am

FILENAME: FE-E-XX-0501AD.dwg

N1808

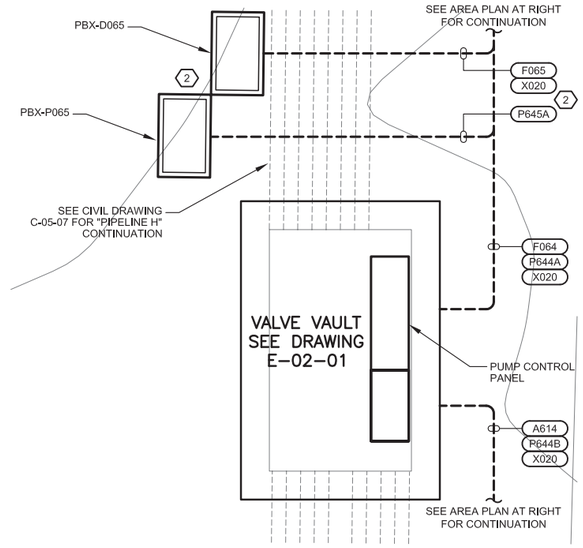

INNER RECIRCULATION LOOP INJECTION WELL IRL-4 VALVE VAULT ELECTRICAL PARTIAL SITE PLAN

0 2.6 5.2 7.8
SCALE: 3/8"=1'

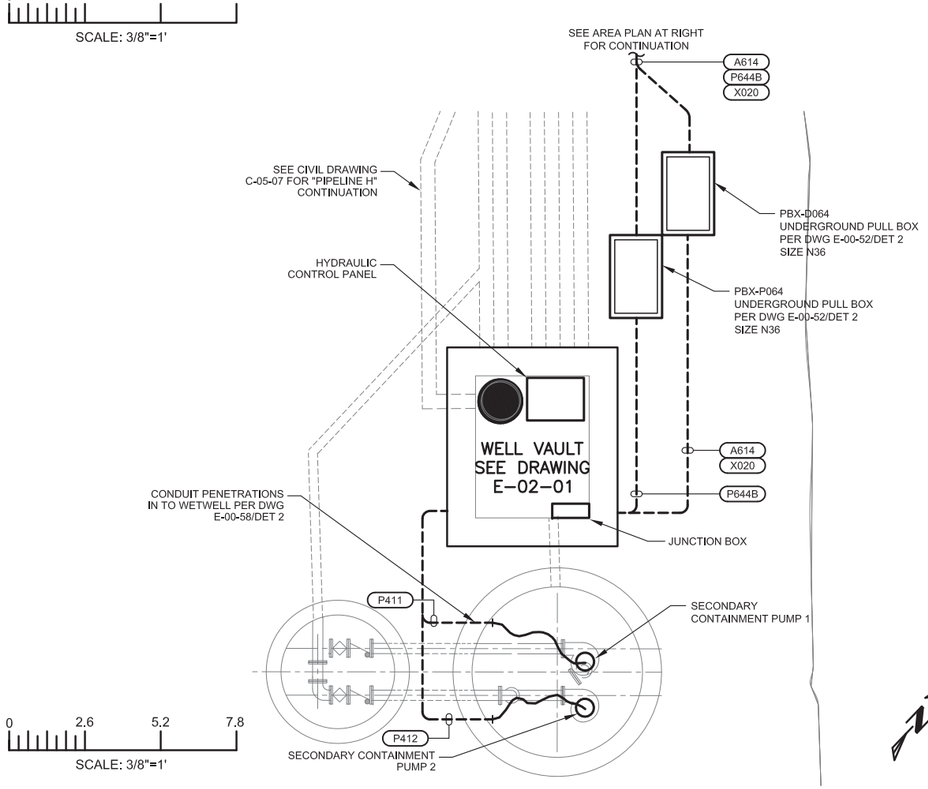

0 2.6 5.2 7.8
SCALE: 3/8"=1'

INNER RECIRCULATION LOOP INJECTION WELL IRL-4 WELL VAULT ELECTRICAL PARTIAL SITE PLAN

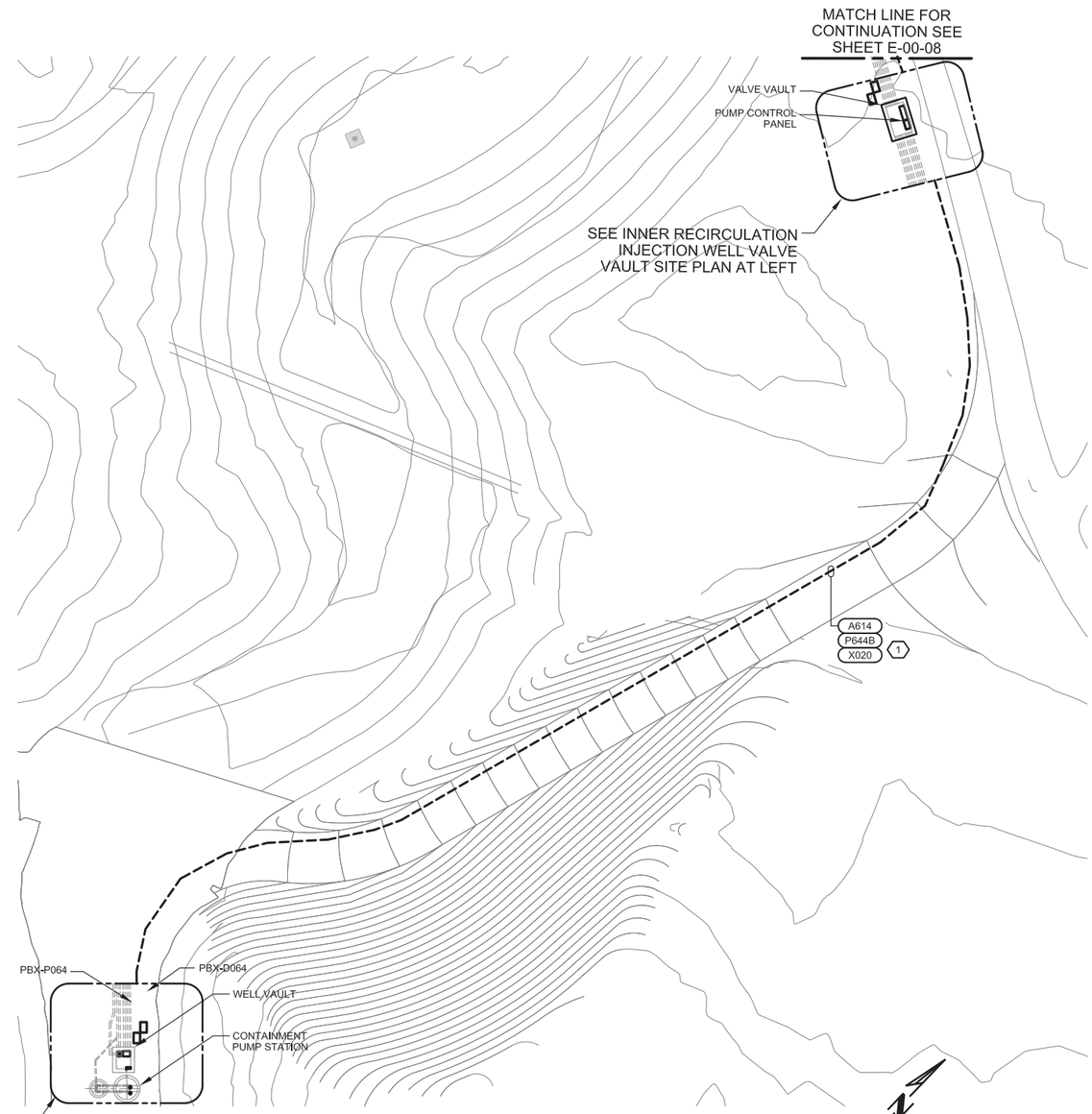

INNER RECIRCULATION LOOP INJECTION WELL IRL-4 AREA PLAN

0 20 40 60
SCALE: 1"=20'

ELECTRICAL PLAN NOTES:

1. SEE ELECTRICAL PLAN NOTES ON DRAWING E-00-02.

DRAWING REFERENCED NOTES:

1. CONDUIT ROUTE AND PULLBOX LOCATIONS SHOWN ARE APPROXIMATE. COORDINATE CONDUIT ROUTE AND PULLBOX LOCATIONS WITH CIVIL PIPELINE ROUTING. SEE DRAWINGS C-05-01 & C-05-07.
2. PROVISIONS FOR FUTURE WELL IRL-5.

DRAFT
NOT FOR
CONSTRUCTION

FRISCH ENGINEERING, INC.
CONSULTING ELECTRICAL ENGINEERS
13405 FOLSOM BLVD, UNIT 600
FOLSOM, CA 95630
PH 916 353 1025
WWW.FRISCHENGINEERING.COM

CH2MHILL®

NO.	DATE	DESCRIPTION	GM/SPEC	DWN	CHKD	SUPV	APVD BY
1	9/8/14	PRE-FINAL (90%) DESIGN		MBY			TPF
0	4/5/13	INTERMEDIATE (60%) DESIGN		MBY			TPF

REVISIONS

APPROVED BY: TPF
SO
SUPV TPF
DSGN MBY
DWN MBY, NC
CHKD MF
OK TPF
DATE
SCALES N/A

TOPOCK GROUNDWATER REMEDIATION PROJECT
INNER RECIRCULATION LOOP INJECTION WELL IRL-4 SITE PLAN
GAS TRANSMISSION & DISTRIBUTION
PACIFIC GAS AND ELECTRIC COMPANY
SAN FRANCISCO, CALIFORNIA

MICROFILM
BILL OF MATL
DWG LIST
SUPSDS
SUPSD BY
SHEET NO. of SHEETS
E-05-04
REV 1

FILENAME: FE-E-XXX-0501AD.dwg
PLOT DATE: Aug 26, 2014 PLOT TIME: 9:52:43am

N1806

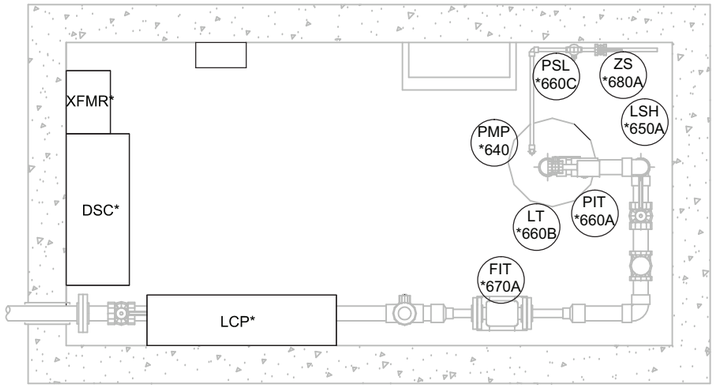

WELL VAULT ELECTRICAL AND INSTRUMENTATION PLAN

1" = 1'-0"

NOTES:

1. CONDUIT ROUTING WITHIN VAULTS TO BE DETERMINED BY CONTRACTOR AND APPROVED BY ENGINEER.
2. "*" IS A PLACEHOLDER FOR THE LOCATION ID. SEE DESCRIPTION BELOW FOR FULL LOCATION ID NUMBER.
3. REFER TO CONDUIT AND CABLE SCHEDULES AND SINGLE LINE DIAGRAMS ON SHEETS E-00-12 THROUGH E-00-20 FOR VAULT MAIN POWER FEED CONDUIT AND WIRE SIZES.

LEGEND

CP	CONTROL PANEL
DSC	DISCONNECT
JB	JUNCTION BOX
P	POWER
I	INSTRUMENTATION
C	CABLE (POWER)
FO	FIBER OPTIC
XFMR	TRANSFORMER
_ _ _ _	MULTICONDUCTOR SHIELDED CABLE

NODE WELL VAULT
TYPE WELL ID
DSC-xx-IRZxx-x

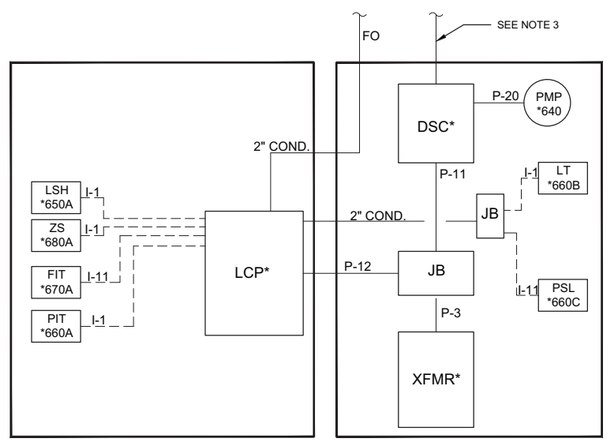

WELL VAULT RISER DIAGRAM

NOT TO SCALE

WELLS RISER DIAGRAM CONDUCTOR SCHEDULE			
SYMBOL	WIRE TYPE, SIZE, AND QTY.	CONDUCTOR OR CABLE TYPE	CONDUIT SIZE (INCHES)
P-1A P-1B	REFER TO SINGLE LINE DIAGRAM.		
P-11	(2)#12 BLK, (2)#12 GRN,(7)#14YEL, (1)#14WHT	XHHW	1
P-12	(1)#12RED, (1)#12WHT, (1)#12GRN, (7)#14YEL, (1)#14WHT	XHHW	1
P-2	(5) #12 BLK, (3) #12 GRN, (14)#14YEL, (2)#14WHT	XHHW	2
P-20	(3) #12 BLK, (1) #12 GRN	XHHW	3/4"
P-3	(2)#12BLK, (2)#12GRN,(1)#12RED, (1)#12WHT	XHHW	1
P-4	(3) #12 BLK, (1) #12 GRN, (7)#14YEL, (1)#14WHT	XHHW	1
P-5	(1)#12RED, (1)#12WHT, (1)#12GRN, (4)14YEL, (2)#14WHT	XHHW	1
FO	MULTI-MODE FIBER OPTIC		2
I-1	(1) #16, 2 CONDUCTOR SHIELDED CABLE	BELDEN 9952	3/4"
I-11	(1) #16, 4 CONDUCTOR SHIELDED CABLE	BELDEN 9954	3/4"
I-17	(1) #18, 7 CONDUCTOR SHIELDED CABLE	BELDEN 5305FE	3/4"
C-1	SOW CABLE (1)#16BLK, (1)#16WHT, (1)#16GRN	XHHW	3/4"
NOTE:	THIS SCHEDULE APPLIES TO ALL VAULT RISER DIAGRAMS. SOME OF THE SYMBOLS MAY NOT BE USED ON THIS DRAWING.		

- DRAFT -
NOT FOR CONSTRUCTION

ARCADIS

NO.	DATE	DESCRIPTION	GM/SPEC	DWN	CHKD	SUPV	APVD BY
1	09/08/14	PRE-FINAL (90%) DESIGN		LUK	KLD	JPB	JEF
0	04/05/13	INTERMEDIATE (60%) DESIGN		LUK	KLD	JPB	JEF

REVISIONS

APPROVED BY: JEF

SO
SUPV JPB
DSGN KLD
DWN LUK
CHKD JPB
OK JEF
DATE 09/08/14
SCALES 1" = 1'-0"

TOPOCK GROUNDWATER REMEDIATION PROJECT

INNER RECIRCULATION LOOP INJECTION
DUAL SCREEN INJECTION WELL
ELECTRICAL PLAN

GAS TRANSMISSION & DISTRIBUTION
PACIFIC GAS AND ELECTRIC COMPANY
SAN FRANCISCO, CALIFORNIA

MICROFILM
BILL OF MATL
DWG LIST
SUPSDS
SUPSD BY
SHEET NO. of SHEETS
E-05-05
REV 1

N1808

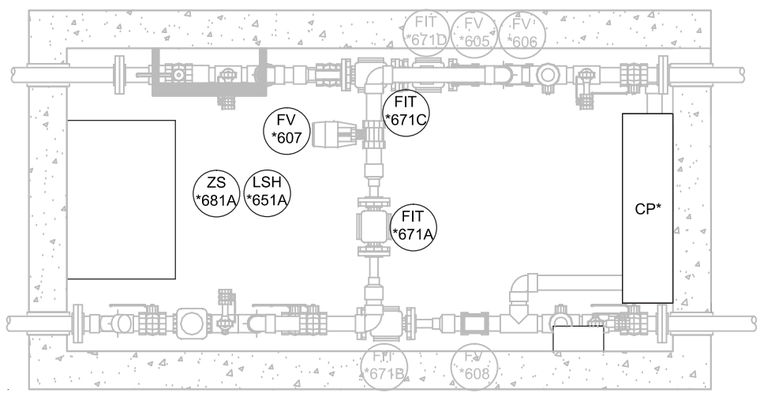

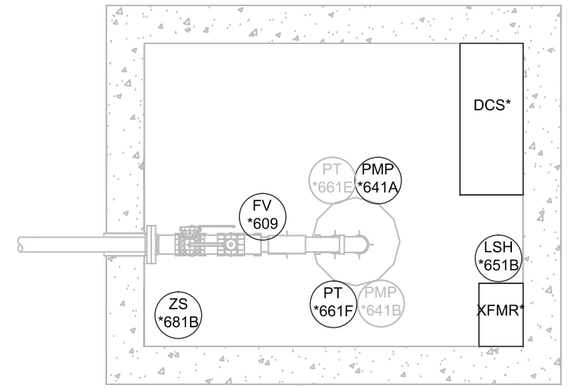

NOTES:

1. CONDUIT ROUTING WITHIN VAULTS TO BE DETERMINED BY CONTRACTOR AND APPROVED BY ENGINEER.
2. "*" IS A PLACEHOLDER FOR THE LOCATION ID. SEE DESCRIPTION BELOW FOR FULL LOCATION ID NUMBER.
3. D
4. REFER TO CONDUIT AND CABLE SCHEDULES AND SINGLE LINE DIAGRAMS ON SHEETS E-00-12 THROUGH E-00-20 FOR VAULT MAIN POWER FEED CONDUIT AND WIRE SIZES.

METER AND WELL VAULT ELECTRICAL AND INSTRUMENTATION PLAN

1" = 1"-0"

LEGEND

CP	CONTROL PANEL
DSC	DISCONNECT
JB	JUNCTION BOX
P	POWER
I	INSTRUMENTATION
C	CABLE (POWER)
FO	FIBER OPTIC
XFMR	TRANSFORMER
- - - - - -	MULTICONDUCTOR SHIELDED CABLE

TYPE — NODE — WELL ID — WELL VAULT

DSC-xx-IRZxx-x

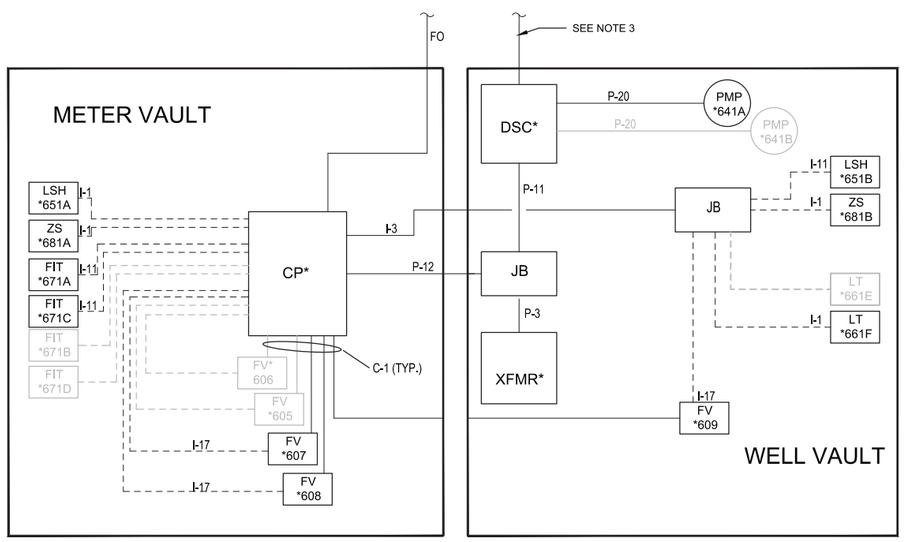

METER AND WELL VAULT RISER DIAGRAM

NOT TO SCALE

WELLS RISER DIAGRAM CONDUCTOR SCHEDULE			
SYMBOL	WIRE TYPE, SIZE, AND QTY.	CONDUCTOR OR CABLE TYPE	CONDUIT SIZE (INCHES)
P-1A	REFER TO SINGLE LINE DIAGRAM.		
P-1B			
P-11	(2)#12 BLK, (2)#12 GRN,(7)#14YEL, (1)#14WHT	XHHW	1
P-12	(1)#12RED, (1)#12WHT, (1)#12GRN, (7)#14YEL, (1)#14WHT	XHHW	1
P-2	(5) #12 BLK, (3) #12 GRN, (14)#14YEL, (2)#14WHT	XHHW	2
P-20	(3) #12 BLK, (1) #12 GRN	XHHW	3/4"
P-3	(2)#12BLK, (2)#12GRN,(1)#12RED, (1)#12WHT	XHHW	1
P-4	(3) #12 BLK, (1) #12 GRN, (7)#14YEL, (1)#14WHT	XHHW	1
P-5	(1)#12RED, (1)#12WHT, (1)#12GRN, (4)14YEL, (2)#14WHT	XHHW	1
FO	MULTI-MODE FIBER OPTIC		2
I-1	(1) #16, 2 CONDUCTOR SHIELDED CABLE	BELDEN 9952	3/4"
I-11	(1) #16, 4 CONDUCTOR SHIELDED CABLE	BELDEN 9954	3/4"
I-17	(1) #18, 7 CONDUCTOR SHIELDED CABLE	BELDEN 5305FE	3/4"
C-1	SOW CABLE (1)#16BLK, (1)#16WHT, (1)#16GRN	XHHW	3/4"
NOTE:	THIS SCHEDULE APPLIES TO ALL VAULT RISER DIAGRAMS. SOME OF THE SYMBOLS MAY NOT BE USED ON THIS DRAWING.		

- DRAFT -
NOT FOR CONSTRUCTION

ARCADIS

NO.	DATE	DESCRIPTION	GM/SPEC	DWN	CHKD	SUPV	APVD BY
1	09/08/14	PRE-FINAL (90%) DESIGN		LUK	KLD	JPB	JEF
0	04/05/13	INTERMEDIATE (60%) DESIGN		LUK	KLD	JPB	JEF

REVISIONS

APPROVED BY: JEF

SO	
SUPV	JPB
DSGN	KLD
DWN	LUK
CHKD	JPB
OK	JEF
DATE	09/08/14
SCALES	1" = 1'-0"

TOPOCK GROUNDWATER REMEDIATION PROJECT
INNER RECIRCULATION LOOP
DUAL SCREEN INJECTION WELL
TYPE 1 ELECTRICAL PLAN
GAS TRANSMISSION & DISTRIBUTION
PACIFIC GAS AND ELECTRIC COMPANY
SAN FRANCISCO, CALIFORNIA

MICROFILM
BILL OF MATL
DWG LIST
SUPSDS
SUPSD BY
SHEET NO. of SHEETS
E-05-06
REV 1

N1808

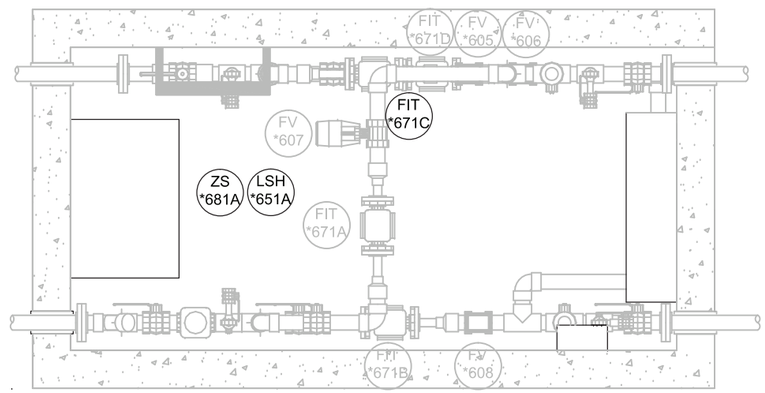

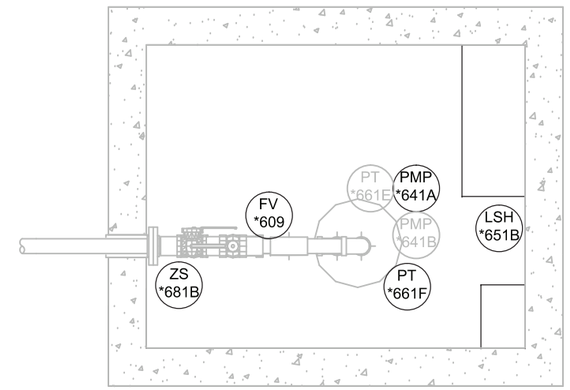

NOTES:

1. CONDUIT ROUTING WITHIN VAULTS TO BE DETERMINED BY CONTRACTOR AND APPROVED BY ENGINEER.
2. "*" IS A PLACEHOLDER FOR THE LOCATION ID. SEE DESCRIPTION BELOW FOR FULL LOCATION ID NUMBER.
3. REFER TO CONDUIT AND CABLE SCHEDULES AND SINGLE LINE DIAGRAMS ON SHEETS E-00-12 THROUGH E-00-20 FOR VAULT MAIN POWER FEED CONDUIT AND WIRE SIZES.

LEGEND

CP	CONTROL PANEL
DSC	DISCONNECT
JB	JUNCTION BOX
P	POWER
I	INSTRUMENTATION
C	CABLE (POWER)
FO	FIBER OPTIC
XFMR	TRANSFORMER
----------	MULTICONDUCTOR SHIELDED CABLE

NODE WELL VAULT
TYPE WELL ID
DSC-xx-IRZxx-x

METER AND WELL VAULT ELECTRICAL AND INSTRUMENTATION PLAN

1" = 1"-0"

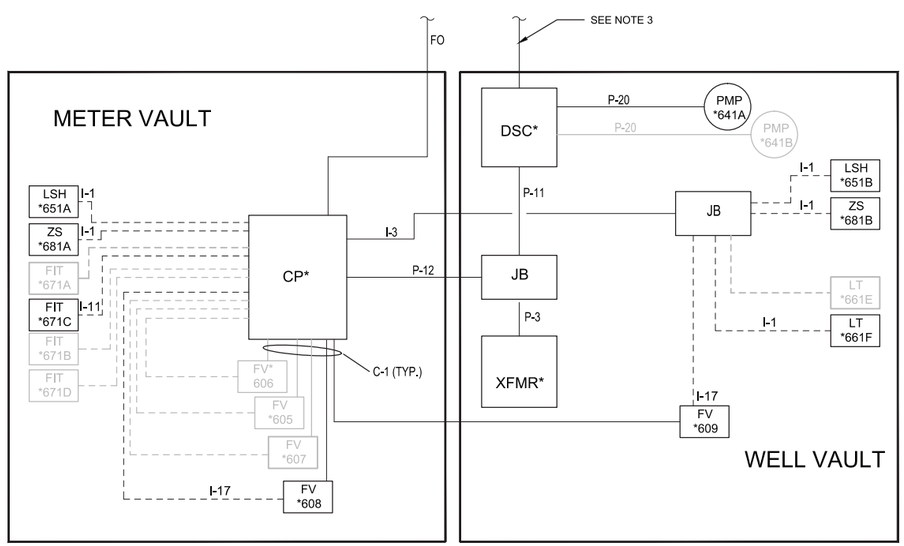

METER AND WELL VAULT RISER DIAGRAM

NOT TO SCALE

WELLS RISER DIAGRAM CONDUCTOR SCHEDULE

SYMBOL	WIRE TYPE, SIZE, AND QTY.	CONDUCTOR OR CABLE TYPE	CONDUIT SIZE (INCHES)
P-1A	REFER TO SINGLE LINE DIAGRAM.		
P-1B			
P-11	(2)#12 BLK, (2)#12 GRN,(7)#14YEL, (1)#14WHT	XHHW	1
P-12	(1)#12RED, (1)#12WHT, (1)#12GRN, (7)#14YEL, (1)#14WHT	XHHW	1
P-2	(5) #12 BLK, (3) #12 GRN, (14)#14YEL, (2)#14WHT	XHHW	2
P-20	(3) #12 BLK, (1) #12 GRN	XHHW	3/4"
P-3	(2)#12BLK, (2)#12GRN,(1)#12RED, (1)#12WHT	XHHW	1
P-4	(3) #12 BLK, (1) #12 GRN, (7)#14YEL, (1)#14WHT	XHHW	1
P-5	(1)#12RED, (1)#12WHT, (1)#12GRN, (4)14YEL, (2)#14WHT	XHHW	1
FO	MULTI-MODE FIBER OPTIC		2
I-1	(1) #16, 2 CONDUCTOR SHIELDED CABLE	BELDEN 9952	3/4"
I-11	(1) #16, 4 CONDUCTOR SHIELDED CABLE	BELDEN 9954	3/4"
I-17	(1) #18, 7 CONDUCTOR SHIELDED CABLE	BELDEN 5305FE	3/4"
C-1	SOW CABLE (1)#16BLK, (1)#16WHT, (1)#16GRN	XHHW	3/4"
NOTE:	THIS SCHEDULE APPLIES TO ALL VAULT RISER DIAGRAMS. SOME OF THE SYMBOLS MAY NOT BE USED ON THIS DRAWING.		

- DRAFT -
NOT FOR CONSTRUCTION

ARCADIS

NO.	DATE	DESCRIPTION	GM/SPEC	DWN	CHKD	SUPV	APVD	BY
1	09/08/14	PRE-FINAL (90%) DESIGN		LUK	KLD	JPB	JEF	
0	04/05/13	INTERMEDIATE (60%) DESIGN		LUK	KLD	JPB	JEF	

REVISIONS

APPROVED BY: JEF

SO
SUPV JPB
DSGN KLD
DWN LUK
CHKD JPB
OK JEF
DATE 09/08/14
SCALES 1" = 1'-0"

TOPOCK GROUNDWATER REMEDIATION PROJECT
INNER RECIRCULATION LOOP
DUAL SCREEN INJECTION WELL
TYPE 2 ELECTRICAL PLAN
GAS TRANSMISSION & DISTRIBUTION
PACIFIC GAS AND ELECTRIC COMPANY
SAN FRANCISCO, CALIFORNIA

MICROFILM
BILL OF MATL
DWG LIST
SUPSDS
SUPSD BY
SHEET NO. of SHEETS
E-05-07
REV 1

N1808

XREFS:G:\Aproject\PGE\RC000889\TOPOCK\CAD\Final Remedy\90%\XREF\PG&E_Border.dwg IMAGES:None
Username:yates Spec:FHRNE STANDARD File:G:\Aproject\PGE\RC000889\TOPOCK\CAD\Final Remedy\90%\Post 90%\90% INJECTION WELL VAULTS.IRL_0827140.DWG Scale:1:1 Date:08/27/2014 Time:17:05 Layout:E-05-03

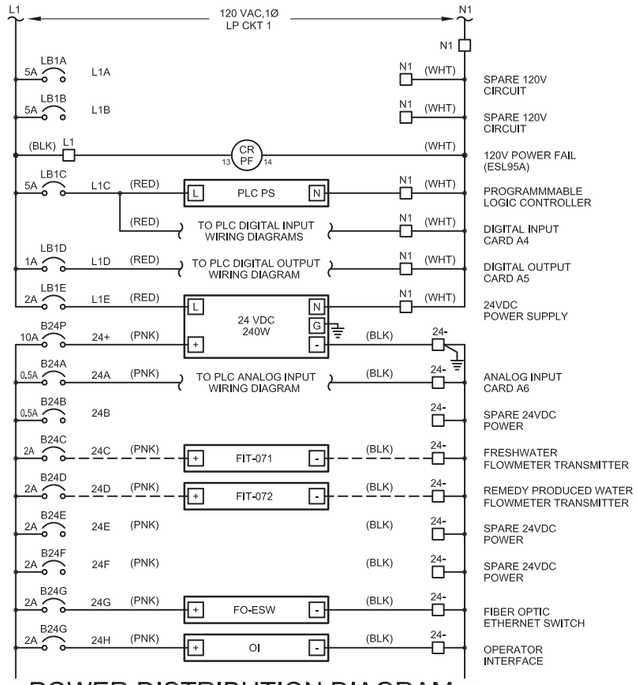

POWER DISTRIBUTION DIAGRAM (1)

SCHEMATIC REFERENCED NOTES:

(1) DISTRIBUTION DIAGRAM REPRESENTATIVE OF MAJOR COMPONENTS ONLY. ADDITIONAL FUSES, CIRCUITS AND COMPONENT CONNECTIONS MAY BE REQUIRED FOR A FUNCTIONAL SYSTEM.

GENERAL NOTES:

1. REMAINING WIRES AND TERMINALS SHALL BE NUMBERED BY MANUFACTURER DURING SUBMITTAL.

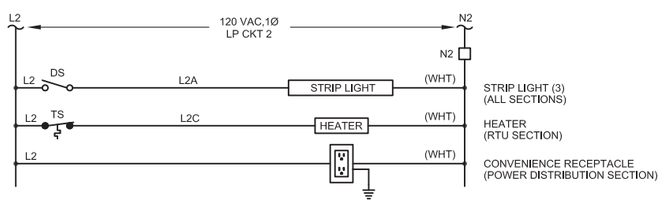

PEDESTAL AUXILLIARY POWER DISTRIBUTION DIAGRAM

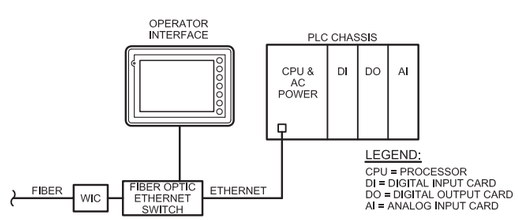

PLC BLOCK DIAGRAM

IRL -1,2,3 - LOAD CALCULATIONS					
LOAD DESCRIPTION		LOAD	QTY	TOTAL	
30 HP	INJECTION WELL	40.00 A	1	33255.4	VA
5	KVA PANELBOARD TRANSFORMER	10.42 A	1	5000.0	VA
	TOTAL LOAD =	46.01 A		38255.4	VA
LOAD CORRECTION FACTORS					
	LARGEST MOTOR LOAD x 25%:				
30	HP => 0.25 x 33255.4 VA =	10.00 A		8313.8	VA
	80% BREAKER DERATING = TOTAL x 0.25 =	14.00 A		11642.3	VA
	FOR CONTINUOUS LOADS NEC 210-20				
	UTILITY SERVICE SIZE (MIN) =	70.02 A		58211.5	VA
	480 V, 3 PHASE, 4 WIRE				
	UTILITY SERVICE SIZE REQUIRED =	200 AMP			

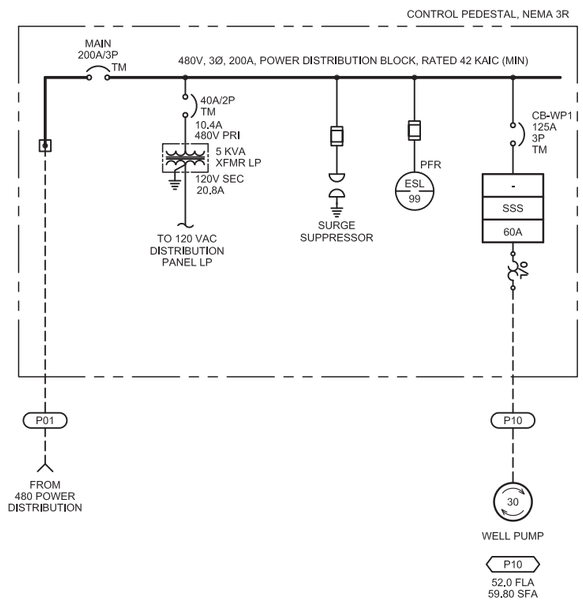

ONE-LINE DIAGRAM

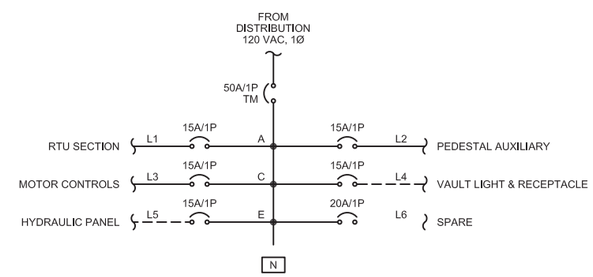

PANEL LP

120/240 VAC DISTRIBUTION DIAGRAM
NEUTRALS NOT SHOWN

DRAFT
NOT FOR
CONSTRUCTION

FRISCH ENGINEERING, INC.
CONSULTING ELECTRICAL ENGINEERS
13405 FOLSOM BLVD, UNIT 600
FOLSOM, CA 95630
PH 916 353 1025
WWW.FRISCHENGINEERING.COM

CH2MHILL®

NO.	DATE	DESCRIPTION	GM/SPEC	DWN	CHKD	SUPV	APVD BY
1	9/8/14	PRE-FINAL (90%) DESIGN		MBY			TPF
0	4/5/13	INTERMEDIATE (60%) DESIGN		MBY			TPF

REVISIONS

APPROVED BY: TPF
SO
SUPV TPF
DSGN MBY
DWN MBY, NC
CHKD MF
OK TPF
DATE
SCALES N/A

TOPOCK GROUNDWATER REMEDIATION PROJECT
INNER RECIRCULATION LOOP
IRL-1,2,3 CONTROL PANEL POWER DISTRIBUTION & PLC DIAGRAM
GAS TRANSMISSION & DISTRIBUTION
PACIFIC GAS AND ELECTRIC COMPANY
SAN FRANCISCO, CALIFORNIA

MICROFILM
BILL OF MATL
DWG LIST
SUPSDS
SUPSD BY
SHEET NO. E-05-08 of SHEETS
REV 1

FILENAME: FE-E-XXX-0508AD.DWG
PLOT DATE: Aug 25, 2014 PLOT TIME: 3:03:20pm

N1808

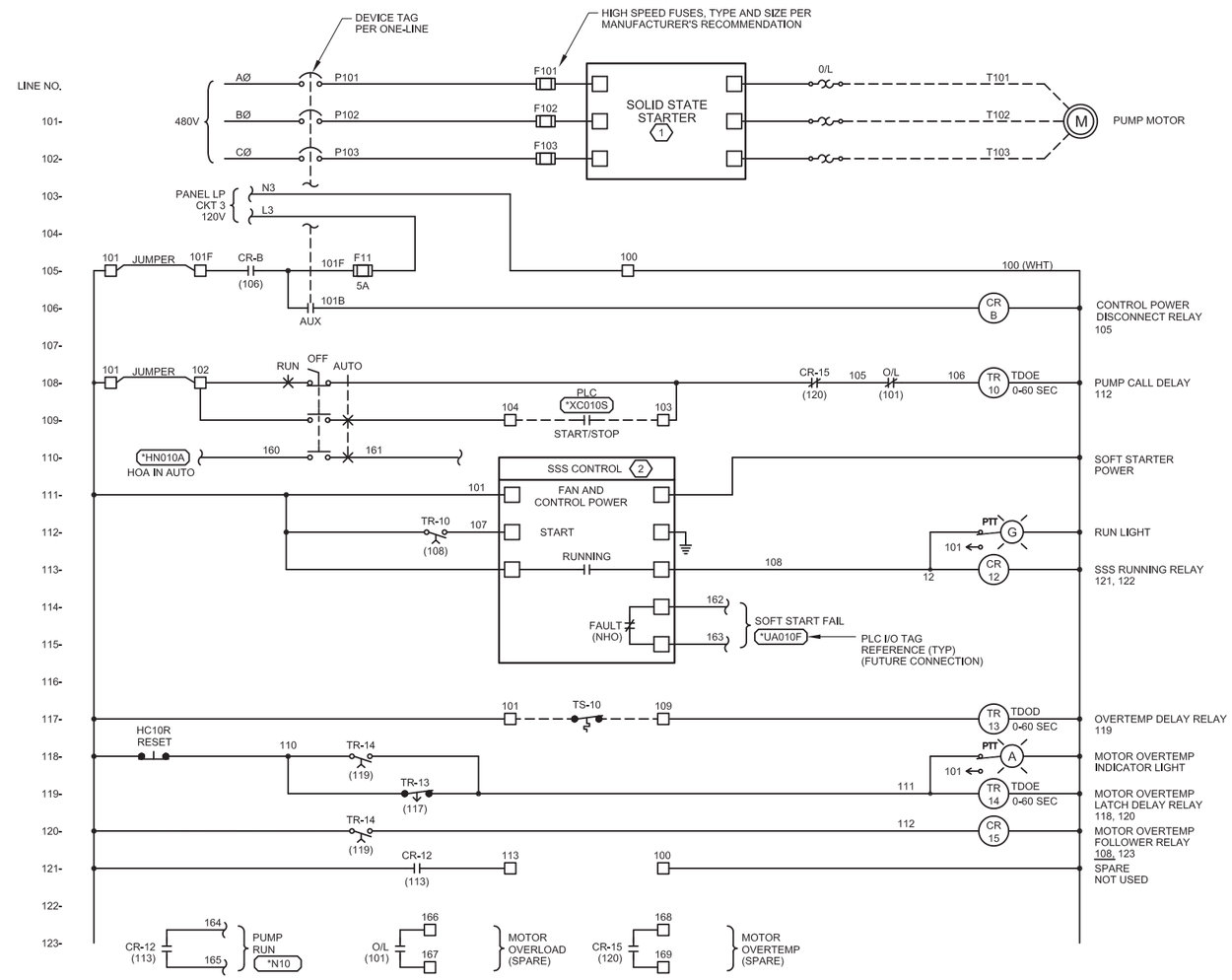

WELL PUMP ELEMENTARY DIAGRAM

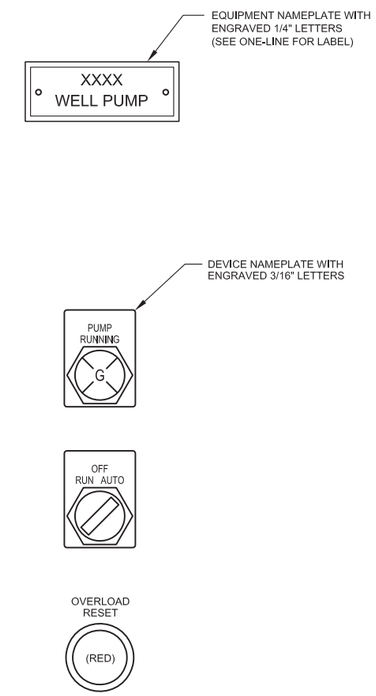

DOOR LAYOUT (PARTIAL)

NOTES REFERENCED IN DRAWING:

1. SOLID STATE STARTER SHALL PROVIDE THE FOLLOWING MOTOR PROTECTION PARAMETERS:

VOLTAGE	CURRENT	MOTOR PARAMETERS
PHASE REVERSAL	OVERLOAD	OVERLOAD CLASS
	UNBALANCE	FULL LOAD CURRENT

2. 120 VAC CONTROL INTERFACE, NO EXCEPTIONS.

GENERAL NOTES:

1. TERMINAL BLOCKS AND WIRES SHALL BE LABELED SAME EXCEPTION: WIRES TO PLC SHALL BE NUMBERED PER CONTROL PANEL TERMINAL BLOCK NUMBER.

DRAFT
NOT FOR
CONSTRUCTION

FRISCH ENGINEERING, INC.
CONSULTING ELECTRICAL ENGINEERS
13405 FOLSOM BLVD, UNIT 600
FOLSOM, CA 95630
PH 916 353 1025
WWW.FRISCHENGINEERING.COM

CH2MHILL®

NO.	DATE	DESCRIPTION	GM/SPEC	DWN	CHKD	SUPV	APVD BY
1	9/8/14	PRE-FINAL (90%) DESIGN		MBY			TPF
0	4/5/13	INTERMEDIATE (60%) DESIGN		MBY			TPF

REVISIONS

APPROVED BY: TPF
SO
SUPV TPF
DSGN MBY
DWN MBY, NC
CHKD MF
OK TPF
DATE
SCALES N/A

TOPOCK GROUNDWATER REMEDIATION PROJECT
INNER RECIRCULATION LOOP
IRL-1,2,3 PUMP ELEMENTARY DIAGRAM
GAS TRANSMISSION & DISTRIBUTION
PACIFIC GAS AND ELECTRIC COMPANY
SAN FRANCISCO, CALIFORNIA

MICROFILM
BILL OF MATL
DWG LIST
SUPSDS
SUPSD BY
SHEET NO. E-05-09 of SHEETS
REV 1

FILENAME: FE-E-XXX-0509AD.DWG
PLOT DATE: Aug 25, 2014 PLOT TIME: 3:03:27pm

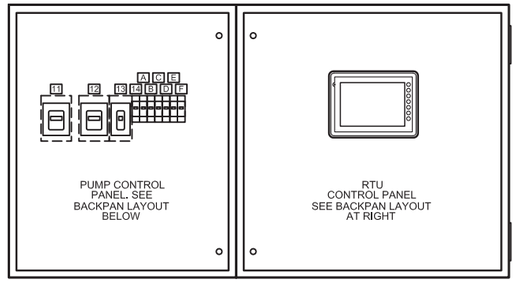

DEADFRONT DOOR ELEVATION

(SHOWN WITH OUTER DOOR REMOVED)

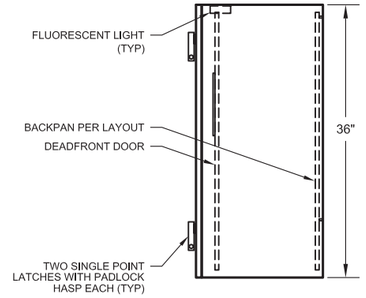

SIDE ELEVATION

ELEVATION

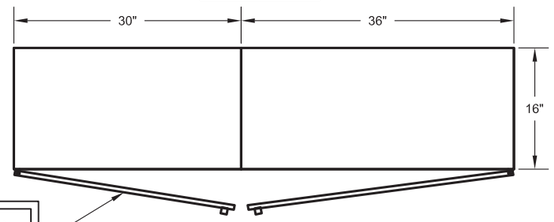

PROJECT NAMEPLATE WITH 1/2" ENGRAVED LETTERING (TYP)

INNER RECIRCULATION LOOP
CONTROL PANEL

BASE PLAN

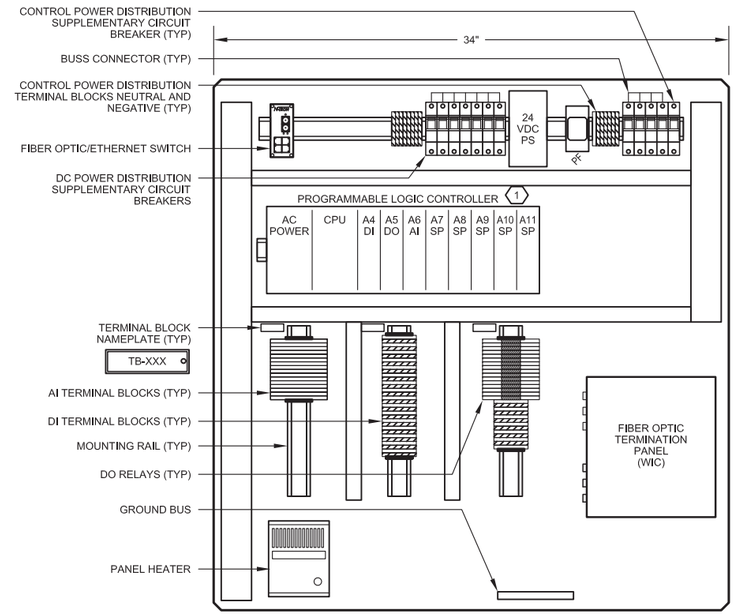

PLC PANEL BACKPAN LAYOUT

1 WIRE I/O TO TERMINAL BLOCK PER EXAMPLE I/O WIRING DIAGRAMS.

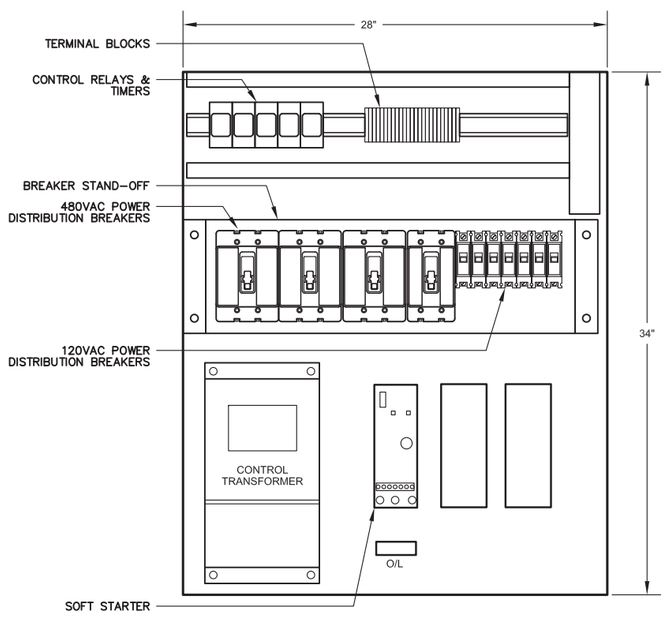

PUMP CONTROL PANEL BACKPAN LAYOUT

NAMEPLATE SCHEDULE

KEY	ENGRAVING LINE 1	ENGRAVING LINE 2	LETTER HEIGHT
11	MAIN	DISCONNECT	3/16"
12	PUMP	DISCONNECT	3/16"
13	TRANSFORMER	DISCONNECT	3/16"
14	PANEL LP	DISCONNECT	3/16"
A	RTU	DISCONNECT	3/16"
B	PEDESTAL AUXILIARY	POWER DISTRIBUTION	3/16"
C	PEDESTAL AUXILIARY	POWER DISTRIBUTION	3/16"
D	MOTOR CONTROL		3/16"
E	SPARE BREAKER		3/16"
F	SPARE BREAKER		3/16"

PANEL FABRICATION METHODS

1. NEMA 4, SS, FOR INDOOR OR OUTDOOR WALLMOUNT INSTALLATION.
2. ALL SEAMS CONTINUOUS WELDED.
3. OUTER DOORS TO BE PADLOCKABLE WITH HEAVY DUTY SINGLE POINT LATCHES.
4. DOOR HINGES AND PINS SHALL BE 316 STAINLESS STEEL.
5. NO SCREWS, RIVETS, OR BOLTS SHALL PROTRUDE EXTERNALLY.
6. INTERNAL SCREWS, BOLTS, AND NUTS SHALL BE MACHINE THREAD.
7. PLASTIC SCREW MOUNTED NAMEPLATES SHALL BE PROVIDED FOR ALL DEVICES ON DEADFRONT SCREWS SHALL BE STAINLESS STEEL.
8. FABRICATION AND WIRING SHALL CONFORM TO U.L. AND NEMA STANDARDS.
9. ALL WIRING SHALL BE PERMANENTLY LABELLED WITH WIRE MARKERS ON BOTH ENDS.
10. WIRING DIAGRAMS SHALL BE PLACED IN A PLASTIC DRAWING HOLDER PERMANENTLY ATTACHED TO THE INSIDE OF THE FRONT DOOR.
11. AS - BUILT WIRING DIAGRAMS SHALL BE SHIPPED WITH EQUIPMENT.

DRAFT
NOT FOR
CONSTRUCTION

FRISCH ENGINEERING, INC.
CONSULTING ELECTRICAL ENGINEERS
13405 FOLSOM BLVD, UNIT 600
FOLSOM, CA 95630
PH 916 353 1025
WWW.FRISCHENGINEERING.COM

CH2MHILL®

REVISIONS

NO.	DATE	DESCRIPTION	GM/SPEC	DWN	CHKD	SUPV	APVD BY
1	9/8/14	PRE-FINAL (90%) DESIGN		MBY			TPF
0	4/5/13	INTERMEDIATE (60%) DESIGN		MBY			TPF

APPROVED BY: TPF

SO	
SUPV	TPF
DSGN	MBY
DWN	MBY, NC
CHKD	MF
OK	TPF
DATE	
SCALES	N/A

TOPOCK GROUNDWATER REMEDIATION PROJECT
INNER RECIRCULATION LOOP
IRL-4 PLC CONTROL PANEL
ELEVATION & BACKPAN LAYOUT
GAS TRANSMISSION & DISTRIBUTION
PACIFIC GAS AND ELECTRIC COMPANY
SAN FRANCISCO, CALIFORNIA

MICROFILM
BILL OF MATL
DWG LIST
SUPSDS
SUPSD BY
SHEET NO. of SHEETS
E-05-10
REV 1

FILENAME: FE-E-XXX-0510AD.DWG
PLOT DATE: Aug 25, 2014 PLOT TIME: 3:03:38pm

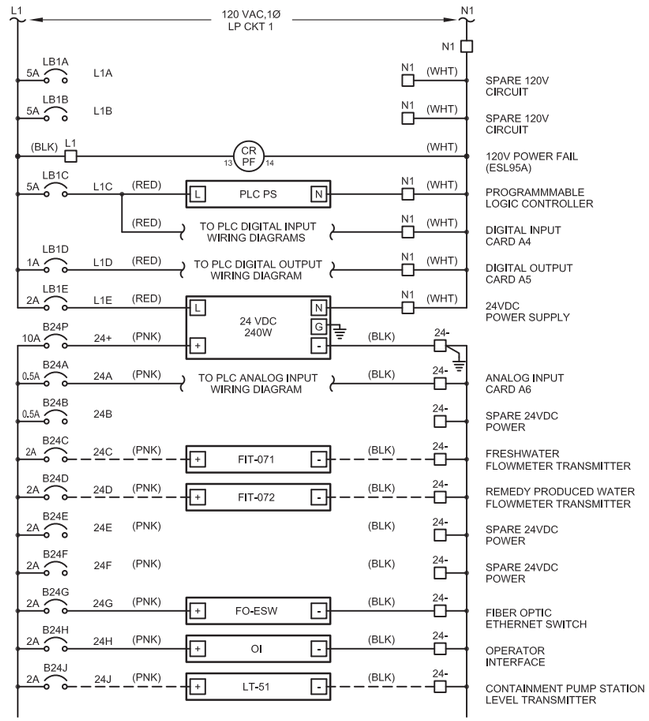

POWER DISTRIBUTION DIAGRAM (1)

SCHEMATIC REFERENCED NOTES:

(1) DISTRIBUTION DIAGRAM REPRESENTATIVE OF MAJOR COMPONENTS ONLY. ADDITIONAL FUSES, CIRCUITS AND COMPONENT CONNECTIONS MAY BE REQUIRED FOR A FUNCTIONAL SYSTEM.

GENERAL NOTES:

1. REMAINING WIRES AND TERMINALS SHALL BE NUMBERED BY MANUFACTURER DURING SUBMITTAL.

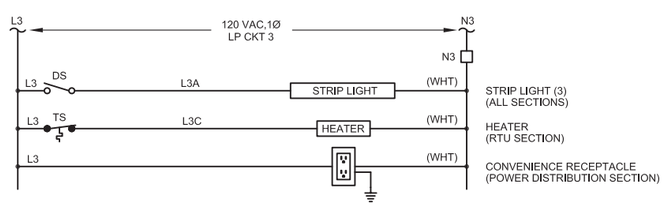

PEDESTAL AUXILLIARY POWER DISTRIBUTION DIAGRAM

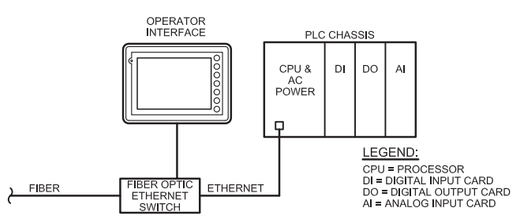

PLC BLOCK DIAGRAM

IRL-4 - LOAD CALCULATIONS					
LOAD DESCRIPTION			LOAD	QTY	TOTAL
40 HP	INJECTION WELL		52.00 A	1	43232.0 VA
10 HP	CONTAINMENT PUMPS		14.00 A	2	23278.8 VA
5	KVA PANELBOARD TRANSFORMER		10.42 A	1	5000.0 VA
		TOTAL LOAD =	86.01 A		71510.8 VA
LOAD CORRECTION FACTORS					
	LARGEST MOTOR LOAD x 25%:				
40	HP => 0.25 x	43232.0 VA =	13.00 A		10808.0 VA
	80% BREAKER DERATING =	TOTAL x 0.25 =	24.75 A		20579.7 VA
	FOR CONTINUOUS LOADS NEC 210-20				
		UTILITY SERVICE SIZE (MIN) =	123.77 A		102898.4 VA
		480 V, 3 PHASE, 4 WIRE			
		UTILITY SERVICE SIZE REQUIRED =	200 AMP		

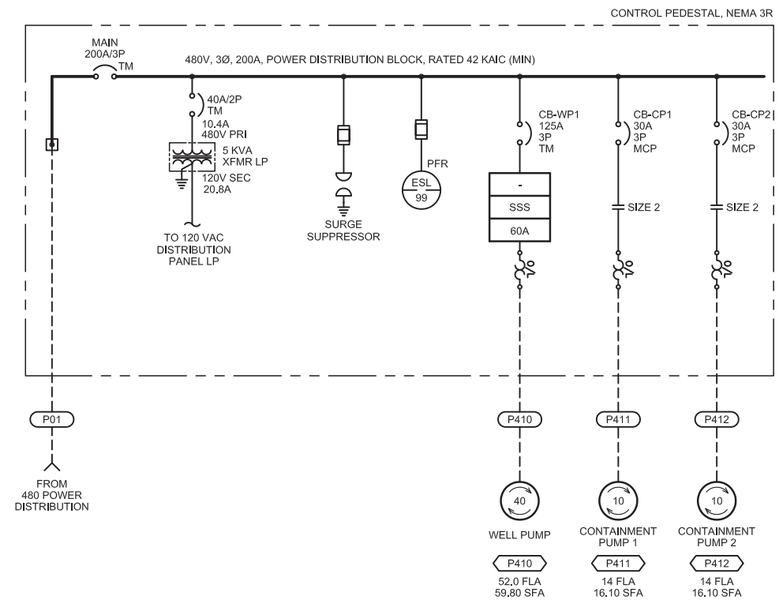

ONE-LINE DIAGRAM

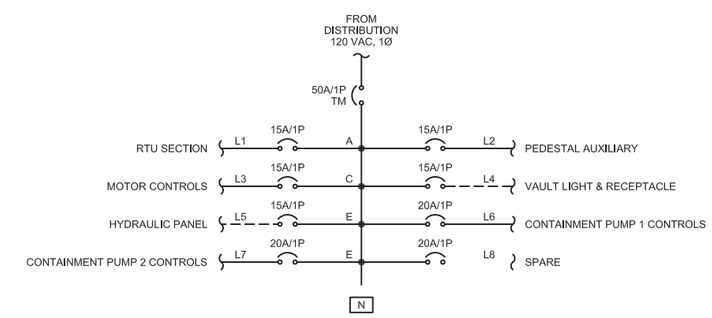

PANEL LP

120/240 VAC DISTRIBUTION DIAGRAM
NEUTRALS NOT SHOWN

DRAFT
NOT FOR
CONSTRUCTION

FRISCH ENGINEERING, INC.
CONSULTING ELECTRICAL ENGINEERS
13405 FOLSOM BLVD, UNIT 600
FOLSOM, CA 95630
PH 916 353 1025
WWW.FRISCHENGINEERING.COM

CH2MHILL®

NO.	DATE	DESCRIPTION	GM/SPEC	DWN	CHKD	SUPV	APVD BY
1	9/8/14	PRE-FINAL (90%) DESIGN		MBY			TPF
0	4/5/13	INTERMEDIATE (60%) DESIGN		MBY			TPF

REVISIONS

APPROVED BY: TPF

SO
SUPV TPF
DSGN MBY
DWN MBY, NC
CHKD MF
OK TPF
DATE
SCALES N/A

TOPOCK GROUNDWATER REMEDIATION PROJECT
INNER RECIRCULATION LOOP
IRL-4 CONTROL PANEL POWER DISTRIBUTION & PLC DIAGRAM
GAS TRANSMISSION & DISTRIBUTION
PACIFIC GAS AND ELECTRIC COMPANY
SAN FRANCISCO, CALIFORNIA

MICROFILM
BILL OF MATL
DWG LIST
SUPSDS
SUPSD BY
SHEET NO. of SHEETS
E-05-11
REV 1

FILENAME: FE-E-XXX-0511AD.DWG
PLOT DATE: Aug 25, 2014 PLOT TIME: 3:03:47pm

N1808

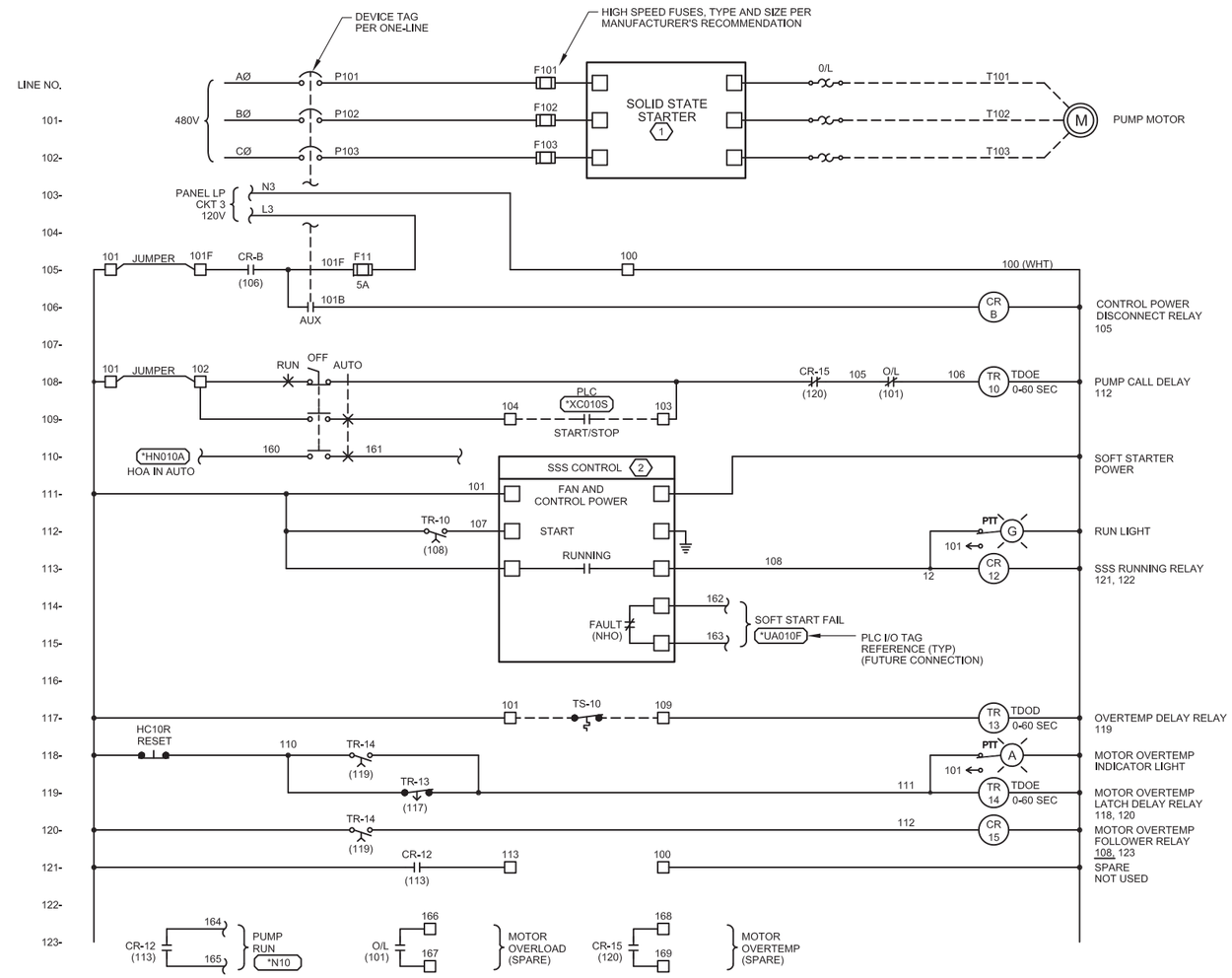

WELL PUMP ELEMENTARY DIAGRAM

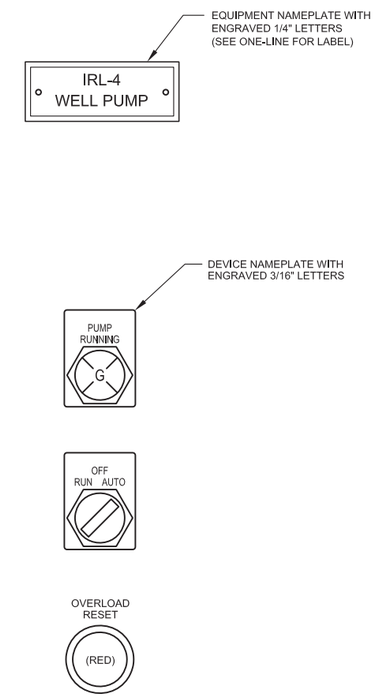

DOOR LAYOUT (PARTIAL)

NOTES REFERENCED IN DRAWING:

1. SOLID STATE STARTER SHALL PROVIDE THE FOLLOWING MOTOR PROTECTION PARAMETERS:

VOLTAGE	CURRENT	MOTOR PARAMETERS
PHASE REVERSAL	OVERLOAD	OVERLOAD CLASS
	UNBALANCE	FULL LOAD CURRENT

2. 120 VAC CONTROL INTERFACE, NO EXCEPTIONS.

GENERAL NOTES:

1. TERMINAL BLOCKS AND WIRES SHALL BE LABELED SAME EXCEPTION: WIRES TO PLC SHALL BE NUMBERED PER CONTROL PANEL TERMINAL BLOCK NUMBER.

DRAFT NOT FOR CONSTRUCTION

FRISCH ENGINEERING, INC.
CONSULTING ELECTRICAL ENGINEERS
13405 FOLSOM BLVD, UNIT 600
FOLSOM, CA 95630
PH 916 353 1025
WWW.FRISCHENGINEERING.COM

CH2MHILL®

NO.	DATE	DESCRIPTION	GM/SPEC	DWN	CHKD	SUPV	APVD BY
1	9/8/14	PRE-FINAL (90%) DESIGN		MBY			TPF
0	4/5/13	INTERMEDIATE (60%) DESIGN		MBY			TPF

REVISIONS

APPROVED BY: TPF

SO
SUPV TPF
DSGN MBY
DWN MBY, NC
CHKD MF
OK TPF
DATE
SCALES N/A

TOPOCK GROUNDWATER REMEDIATION PROJECT
INNER RECIRCULATION LOOP
IRL-4 SSS PUMP ELEMENTARY DIAGRAM
GAS TRANSMISSION & DISTRIBUTION
PACIFIC GAS AND ELECTRIC COMPANY
SAN FRANCISCO, CALIFORNIA

MICROFILM
BILL OF MATL
DWG LIST
SUPSDS
SUPSD BY
SHEET NO. E-05-12 of SHEETS
REV 1

FILENAME: FE-E-XXX-0512AD.DWG
PLOT DATE: Aug 25, 2014 PLOT TIME: 3:03:57pm

N1806

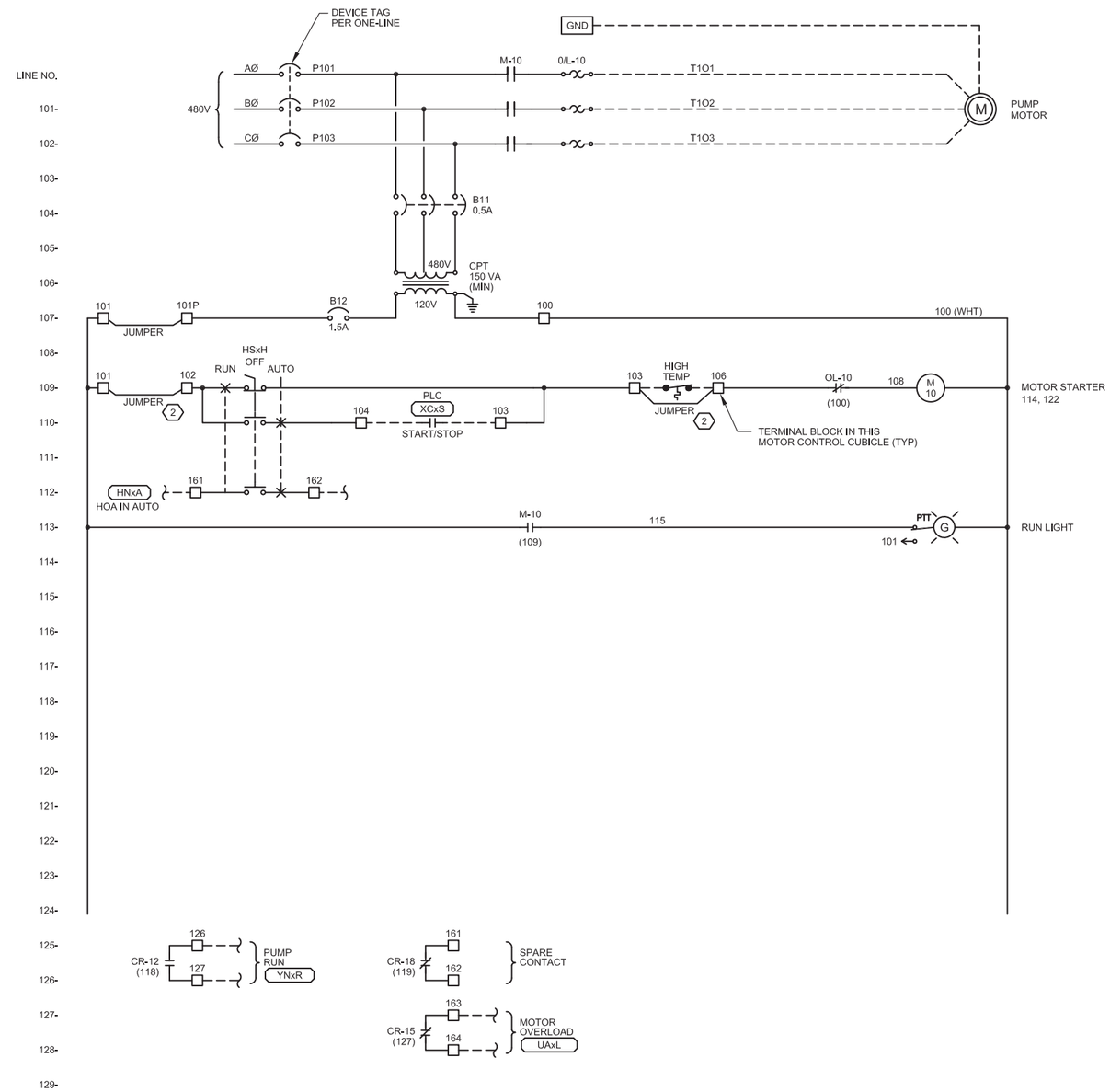

FVNR CENTRIFUGAL MOTOR ELEMENTARY DIAGRAM

PXXX PXXX

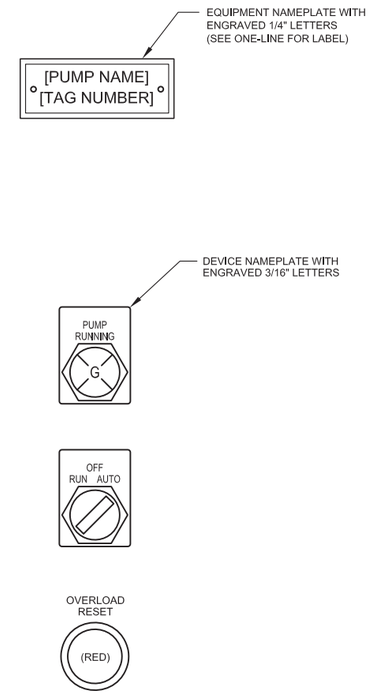

DOOR LAYOUT (PARTIAL)

NOTES REFERENCED IN DRAWING:

1. SET TIME DELAY ON DROP TO 0.5 SECONDS.
2. REMOVE JUMPER FOR DEVICE WHEN CONNECTED.

GENERAL NOTES:

1. SIMILAR DIAGRAM FOR PUMPS LISTED AND PER P&IDS.
2. TERMINAL BLOCKS AND WIRES SHALL BE LABELED SAME EXCEPTION: WIRES TO PLC SHALL BE NUMBERED PER CONTROL PANEL TERMINAL BLOCK NUMBER.

DRAFT NOT FOR CONSTRUCTION

FRISCH ENGINEERING, INC.
CONSULTING ELECTRICAL ENGINEERS
13405 FOLSOM BLVD, UNIT 600
FOLSOM, CA 95630
PH 916 353 1025
WWW.FRISCHENGINEERING.COM

CH2MHILL®

REVISIONS

NO.	DATE	DESCRIPTION	GM/SPEC	DWN	CHKD	SUPV	APVD BY
1	9/8/14	PRE-FINAL (90%) DESIGN		MBY			TPF
0	4/5/13	INTERMEDIATE (60%) DESIGN		MBY			TPF

APPROVED BY: TPF

SO	
SUPV	TPF
DSGN	MBY
DWN	MBY, NC
CHKD	MF
OK	TPF
DATE	
SCALES	N/A

TOPOCK GROUNDWATER REMEDIATION PROJECT
INNER RECIRCULATION LOOP
IRL-4 FVNR PUMP ELEMENTARY DIAGRAM
GAS TRANSMISSION & DISTRIBUTION
PACIFIC GAS AND ELECTRIC COMPANY
SAN FRANCISCO, CALIFORNIA

MICROFILM
BILL OF MATL
DWG LIST
SUPSDS
SUPSD BY
SHEET NO. of SHEETS: E-05-13
REV: 1

PLOT DATE: Aug 25, 2014 PLOT TIME: 3:04:03pm
FILENAME: FE-E-XXX-0513AD.DWG

N1808

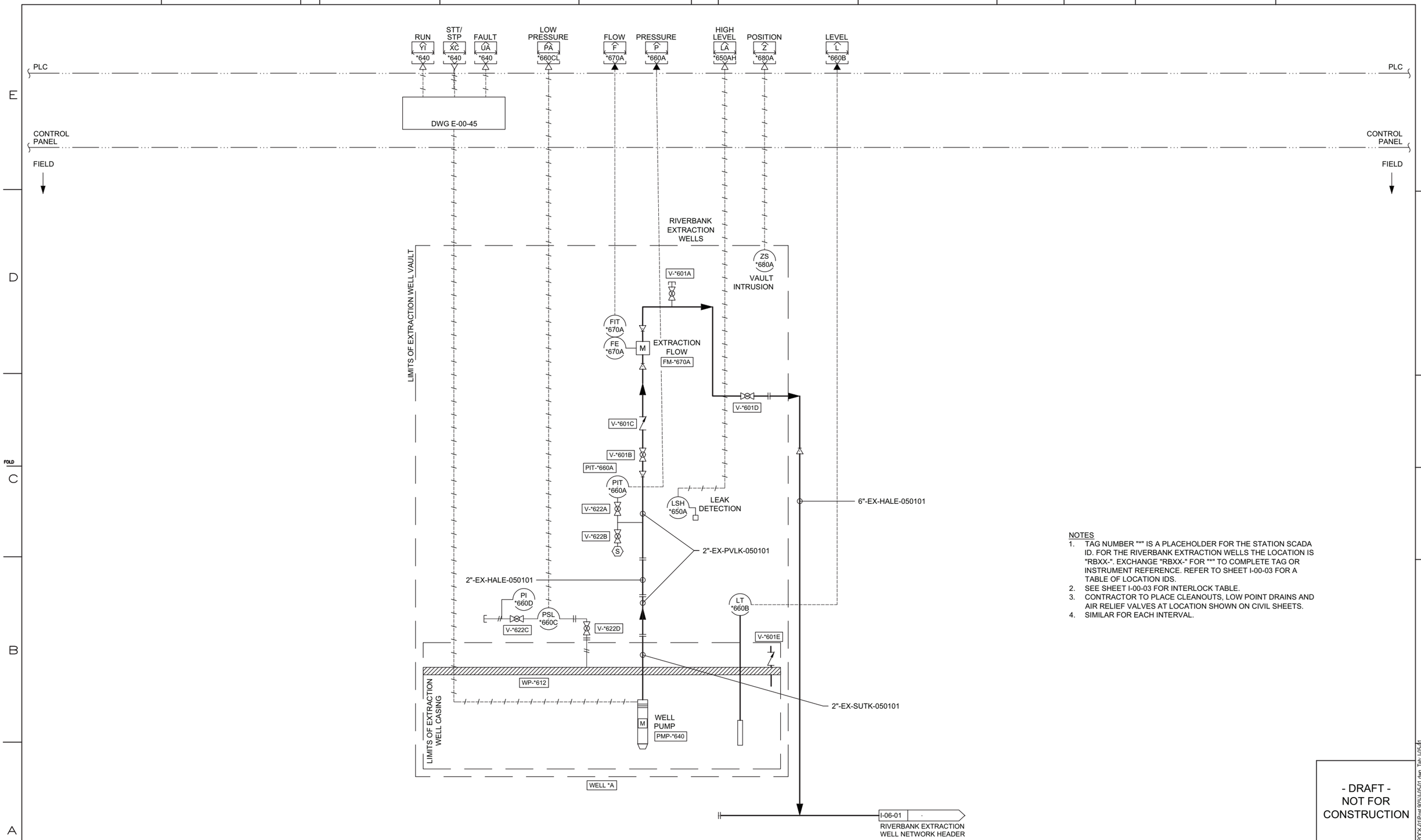

NOTES

1. TAG NUMBER "*" IS A PLACEHOLDER FOR THE STATION SCADA ID. FOR THE RIVERBANK EXTRACTION WELLS THE LOCATION IS "RBXX-". EXCHANGE "RBXX-" FOR "*" TO COMPLETE TAG OR INSTRUMENT REFERENCE. REFER TO SHEET I-00-03 FOR A TABLE OF LOCATION IDS.
2. SEE SHEET I-00-03 FOR INTERLOCK TABLE.
3. CONTRACTOR TO PLACE CLEANOUTS, LOW POINT DRAINS AND AIR RELIEF VALVES AT LOCATION SHOWN ON CIVIL SHEETS.
4. SIMILAR FOR EACH INTERVAL.

- DRAFT -
NOT FOR CONSTRUCTION

ARCADIS

NO.	DATE	DESCRIPTION	GM/SPEC	DWN	CHKD	SUPV	APVD BY
1	09/08/14	PRE-FINAL (90%) DESIGN		MS	MWM	JPB	JEF
0	04/05/13	INTERMEDIATE (60%) DESIGN		MS	MWM	JPB	JEF

REVISIONS

APPROVED BY: JEF

SO
SUPV JPB
DSGN MWM
DWN MS
CHKD JPB
OK JEF
DATE 09/08/14
SCALES NONE

TOPOCK GROUNDWATER REMEDIATION PROJECT

INNER RECIRCULATION LOOP EXTRACTION WELLS P&ID

GAS TRANSMISSION & DISTRIBUTION
PACIFIC GAS AND ELECTRIC COMPANY
SAN FRANCISCO, CALIFORNIA

MICROFILM
BILL OF MATL
DWG LIST
SUPSDS
SUPSD BY
SHEET NO. of SHEETS
I-05-01
REV 1

08/27/2014, 11:01, G:\Graphics\ARI\TOPOCK-01\Post 90%\I-05-01.dwg, Tab: I-05-01

N1808

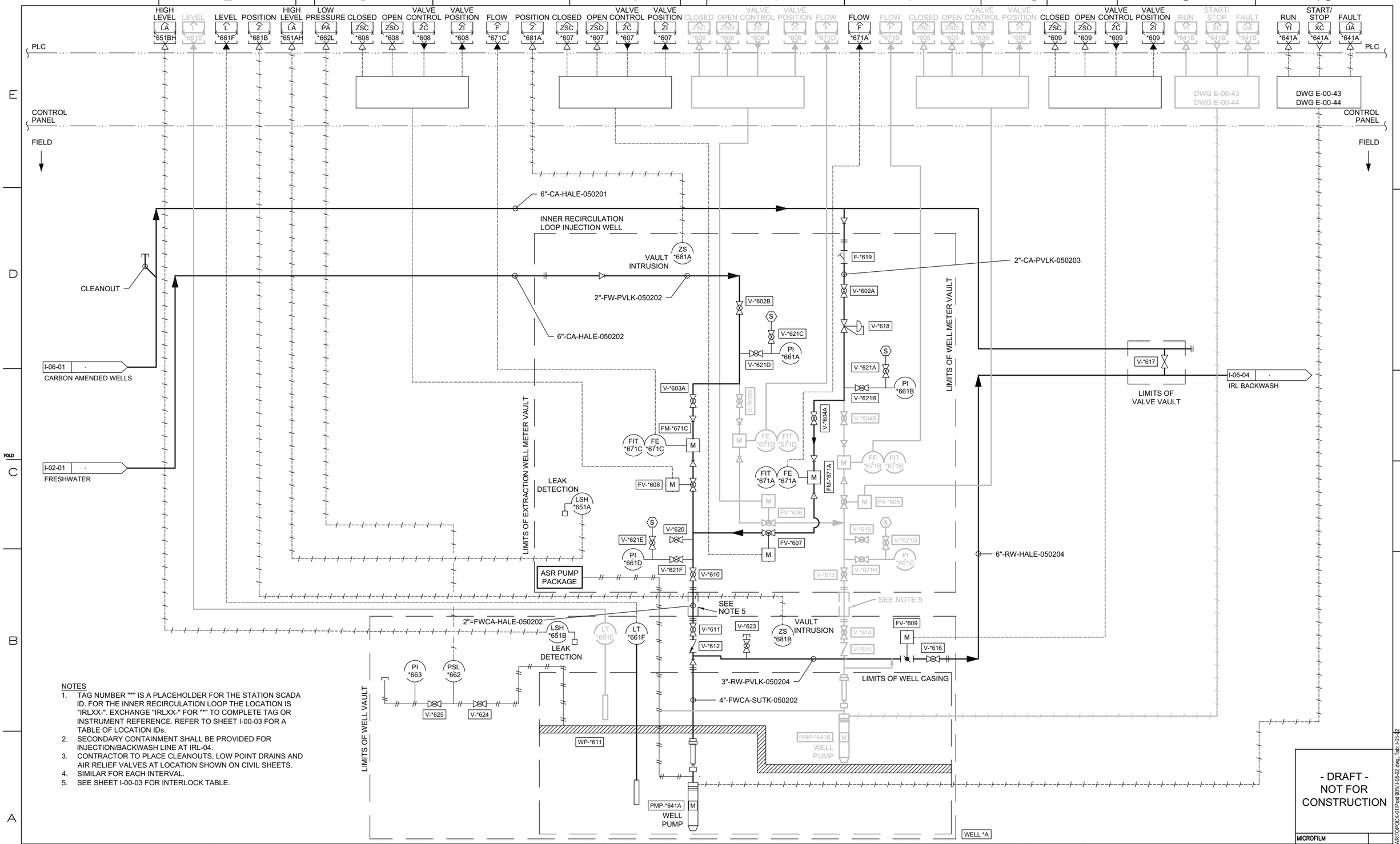

NOTES

1. TAG NUMBER "*" IS A PLACEHOLDER FOR THE STATION SCADA ID. FOR THE INNER RECIRCULATION LOOP THE LOCATION IS "IRLXX-". EXCHANGE "IRLXX-" FOR "*" TO COMPLETE TAG OR INSTRUMENT REFERENCE. REFER TO SHEET I-00-03 FOR A TABLE OF LOCATION IDs.
2. SECONDARY CONTAINMENT SHALL BE PROVIDED FOR INJECTION/BACKWASH LINE AT IRL-04.
3. CONTRACTOR TO PLACE CLEANOUTS, LOW POINT DRAINS AND AIR RELIEF VALVES AT LOCATION SHOWN ON CIVIL SHEETS.
4. SIMILAR FOR EACH INTERVAL.
5. SEE SHEET I-00-03 FOR INTERLOCK TABLE.

- DRAFT - NOT FOR CONSTRUCTION

ARCADIS

NO.	DATE	DESCRIPTION	GM/SPEC	DWN	CHKD	SUPV	APVD BY
1	09/08/14	PRE-FINAL (90%) DESIGN		MS	MWM	JPB	JEF
0	04/05/13	INTERMEDIATE (60%) DESIGN		MS	MWM	JPB	JEF

REVISIONS

APPROVED BY: JEF

SO
SUPV JPB
DSGN MWM
DWN MS
CHKD JPB
OK JEF
DATE 09/08/14
SCALES NONE

TOPOCK GROUNDWATER REMEDIATION PROJECT

INNER RECIRCULATION LOOP TYPE 1 INJECTION WELLS P&ID

GAS TRANSMISSION & DISTRIBUTION
PACIFIC GAS AND ELECTRIC COMPANY
SAN FRANCISCO, CALIFORNIA

MICROFILM
BILL OF MATL
DWG LIST
SUPSDS
SUPSD BY
SHEET NO. of SHEETS
I-05-02
REV 1

N1808

08/27/2014, 11:01 G:\Graphics\AR\TOPOCK-01\Post 90%\I-05-02.dwg, Tab: I-05-02

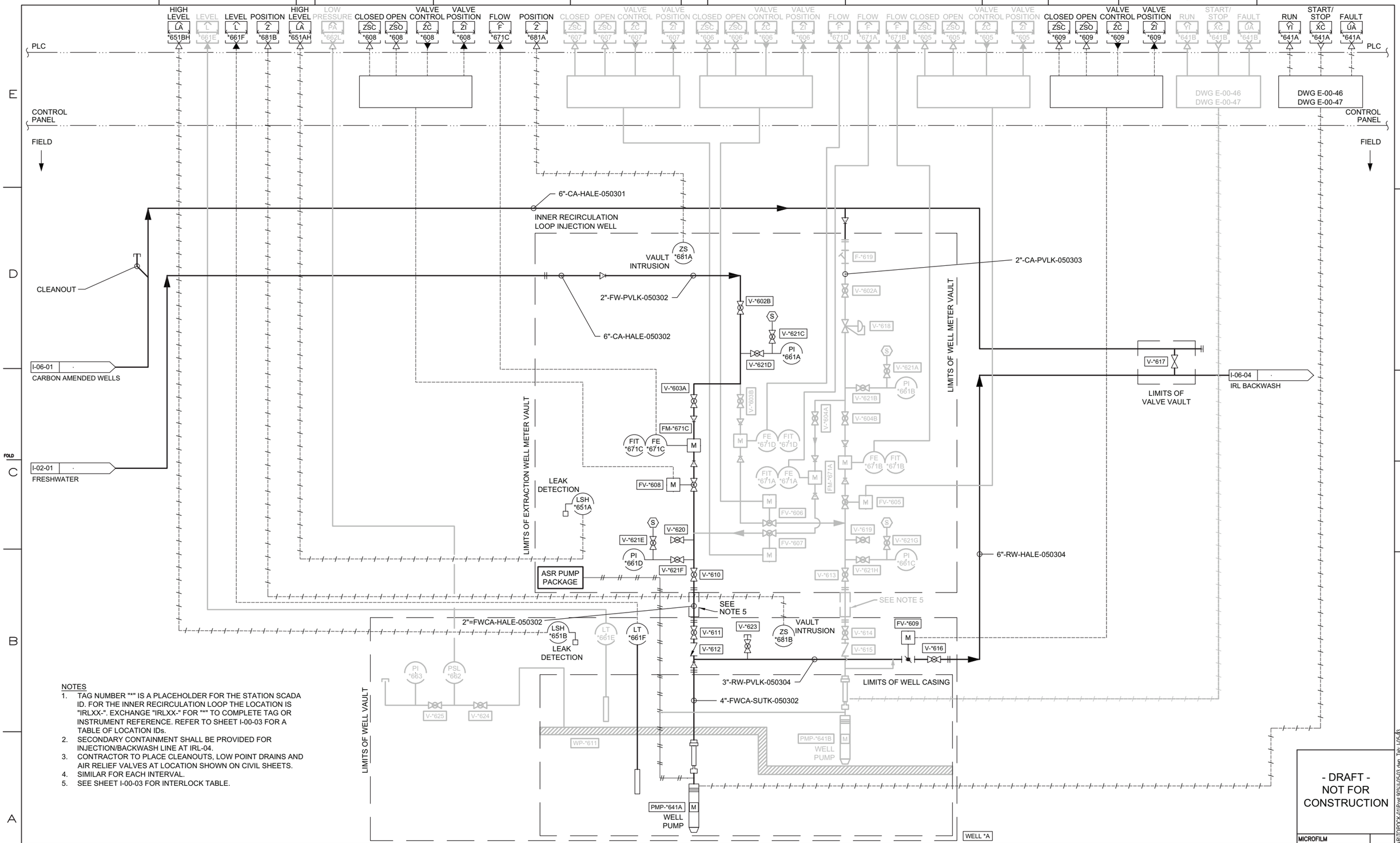

NOTES

1. TAG NUMBER "*" IS A PLACEHOLDER FOR THE STATION SCADA ID. FOR THE INNER RECIRCULATION LOOP THE LOCATION IS "IRLXX-". EXCHANGE "IRLXX-" FOR "*" TO COMPLETE TAG OR INSTRUMENT REFERENCE. REFER TO SHEET I-00-03 FOR A TABLE OF LOCATION IDs.
2. SECONDARY CONTAINMENT SHALL BE PROVIDED FOR INJECTION/BACKWASH LINE AT IRL-04.
3. CONTRACTOR TO PLACE CLEANOUTS, LOW POINT DRAINS AND AIR RELIEF VALVES AT LOCATION SHOWN ON CIVIL SHEETS.
4. SIMILAR FOR EACH INTERVAL.
5. SEE SHEET I-00-03 FOR INTERLOCK TABLE.

- DRAFT - NOT FOR CONSTRUCTION

ARCADIS

NO.	DATE	DESCRIPTION	GM/SPEC	DWN	CHKD	SUPV	APVD BY
1	09/08/14	PRE-FINAL (90%) DESIGN		MS	MWM	JPB	JEF
0	04/05/13	INTERMEDIATE (60%) DESIGN		MS	MWM	JPB	JEF

REVISIONS

APPROVED BY: JEF

SO
SUPV JPB
DSGN MWM
DWN MS
CHKD JPB
OK JEF
DATE 09/08/14
SCALES NONE

TOPOCK GROUNDWATER REMEDIATION PROJECT

INNER RECIRCULATION LOOP TYPE 2 INJECTION WELLS P&I D

GAS TRANSMISSION & DISTRIBUTION
PACIFIC GAS AND ELECTRIC COMPANY
SAN FRANCISCO, CALIFORNIA

MICROFILM
BILL OF MATL
DWG LIST
SUPSDS
SUPSD BY
SHEET NO. of SHEETS
I-05-03 REV 1

N1808

09/27/2014, 11:02, G:\Graphics\ARI\TOPOCK-01\Post 90%\I-05-03.dwg, Tab: I-05-03

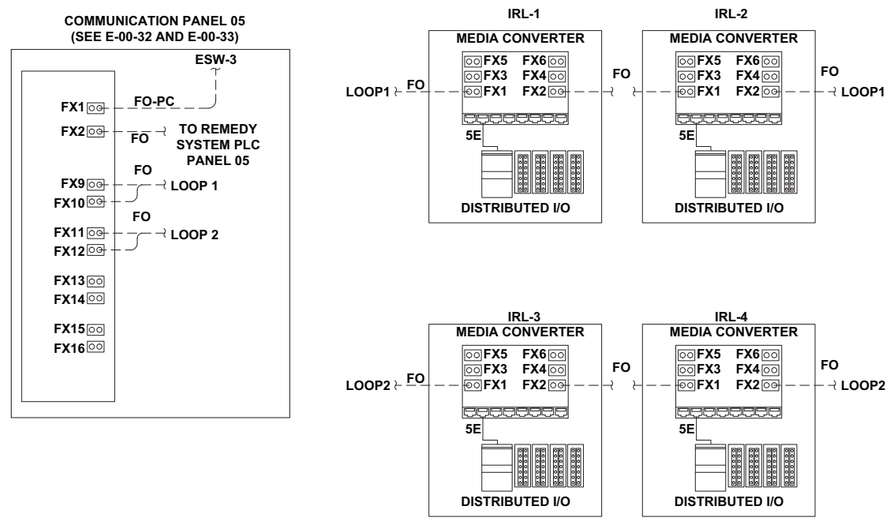

LEGEND

FO	MM FIBER OPTIC CABLE
FO-PC	FIBER OPTIC PATCH CABLE
5E	CAT 5e ETHERNET PATCH CABLE
FOD	FIBER OPTIC DROP
PLC	PROGRAMMABLE LOGIC CONTROLLER
I/O	INPUT/OUTPUT

NOTES:

1. ALL MEDIA CONVERTERS ARE MANAGED ETHERNET MEDIA CONVERTER/SWITCH 8 10/100 BASE TX RJ-45 PORT, 6 100BASE FX, SC. (N-TRON MODEL 114FX6-SC OR 714FX6-SC)

- DRAFT -
NOT FOR
CONSTRUCTION

ARCADIS

NO.	DATE	DESCRIPTION	GM/SPEC	DWN	CHKD	SUPV	APVD BY
1	09/08/14	PRE-FINAL (90%) DESIGN		MS	MWM	JPB	JEF
0	04/05/13	INTERMEDIATE (60%) DESIGN		MS	MWM	JPB	JEF

REVISIONS

APPROVED BY: JEF

SO	
SUPV	JPB
DSGN	MWM
DWN	MS
CHKD	JPB
OK	JEF
DATE	09/08/14
SCALES	NONE

TOPOCK GROUNDWATER REMEDIATION PROJECT

NODE 05 FIBER OPTIC NETWORK

GAS TRANSMISSION & DISTRIBUTION
PACIFIC GAS AND ELECTRIC COMPANY
SAN FRANCISCO, CALIFORNIA

MICROFILM
BILL OF MATL
DWG LIST
SUPSDS
SUPSD BY
SHEET NO. of SHEETS
I-05-04
REV 1

N1808

08/27/2014, 10:48, G:\Graphics\AR\TOPOCK-01\Post 90%\Controls\I\.dwg, Tab: 5-I-4

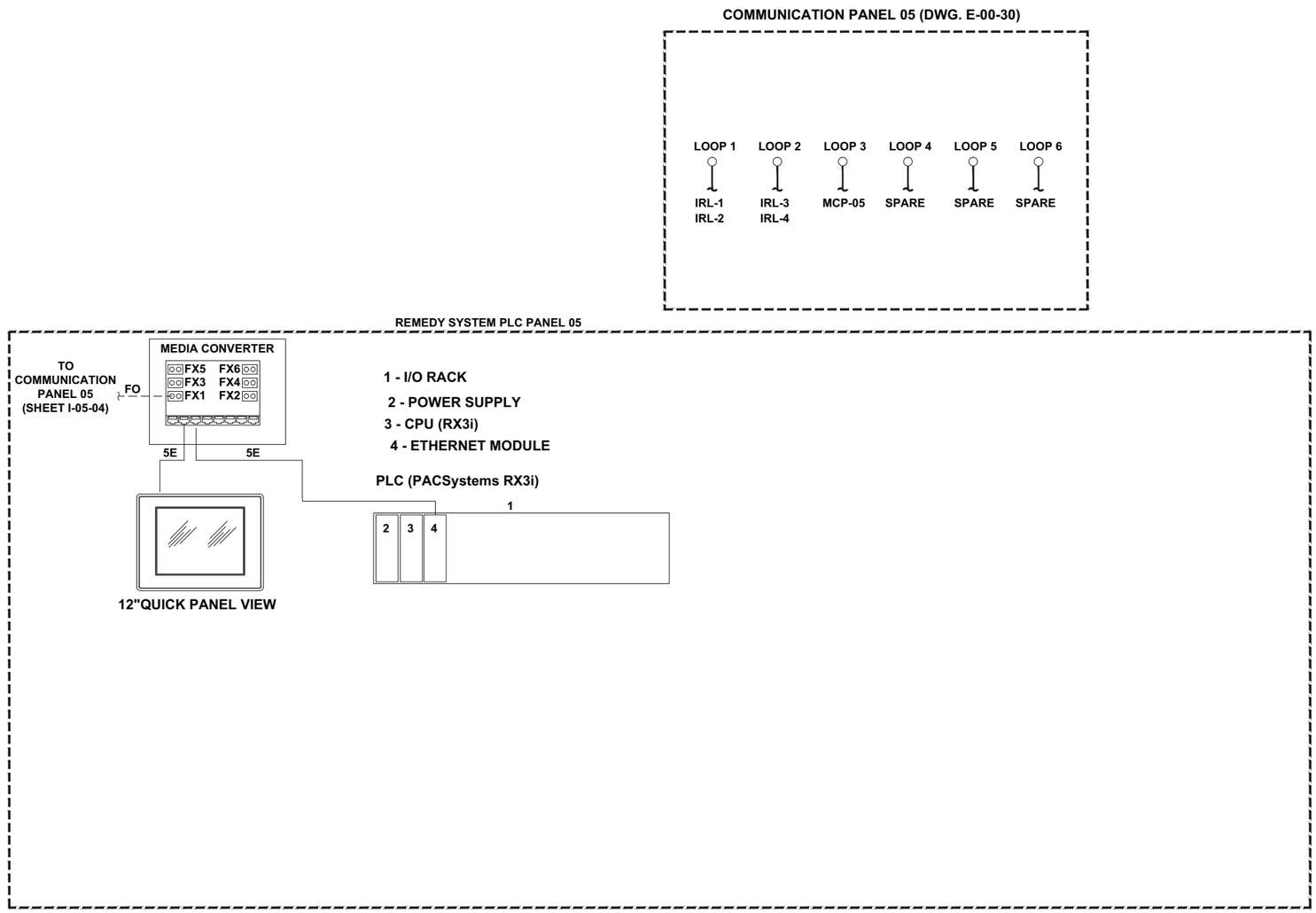

LEGEND

AC	ALTERNATING CURRENT
DC	DIRECT CURRENT
DC-DI	DC DISCRETE INPUT
DO	DISCRETE OUTPUT
AI	ANALOG INPUT
AO	ANALOG OUTPUT
PLC	PROGRAMMABLE LOGIC CONTROLLER
FOD	FIBER OPTIC DROP
I/O	INPUT/OUTPUT
MCP	MAIN CONTROL PANEL
FO	MM FIBER OPTIC CABLE
FO-PC	FIBER OPTIC PATCH CABLE
5E	CAT 5e ETHERNET PATCH CABLE

NOTES:

1. ALL MEDIA CONVERTERS ARE MANAGED ETHERNET MEDIA CONVERTER/SWITCH 8 10/100 BASE TX RJ-45 PORT, 6 100BASE FX, SC. (N-TRON MODEL 114FX6-SC OR 714FX6-SC)

- DRAFT -
NOT FOR
CONSTRUCTION

ARCADIS

NO.	DATE	DESCRIPTION	GM/SPEC	DWN	CHKD	SUPV	APVD BY
1	09/08/14	PRE-FINAL (90%) DESIGN		MS	MWM	JPB	JEF
0	04/05/13	INTERMEDIATE (60%) DESIGN		MS	MWM	JPB	JEF

REVISIONS

APPROVED BY: JEF

SO	
SUPV	JPB
DSGN	MWM
DWN	MS
CHKD	JPB
OK	JEF
DATE	09/08/14
SCALES	NONE

TOPOCK GROUNDWATER REMEDIATION PROJECT

NODE 05 PLC PANEL INSTRUMENTATION CONNECTION SHEET 1 OF 2

GAS TRANSMISSION & DISTRIBUTION

PACIFIC GAS AND ELECTRIC COMPANY
SAN FRANCISCO, CALIFORNIA

MICROFILM
BILL OF MATL
DWG LIST
SUPSDS
SUPSD BY
SHEET NO. of SHEETS

I-05-05 | REV 1

N1808

08/27/2014, 10:48, G:\Graphics\ART\TOPOCK-01\Post 90%\Controls\I-05.dwg, Tab: 5-p5

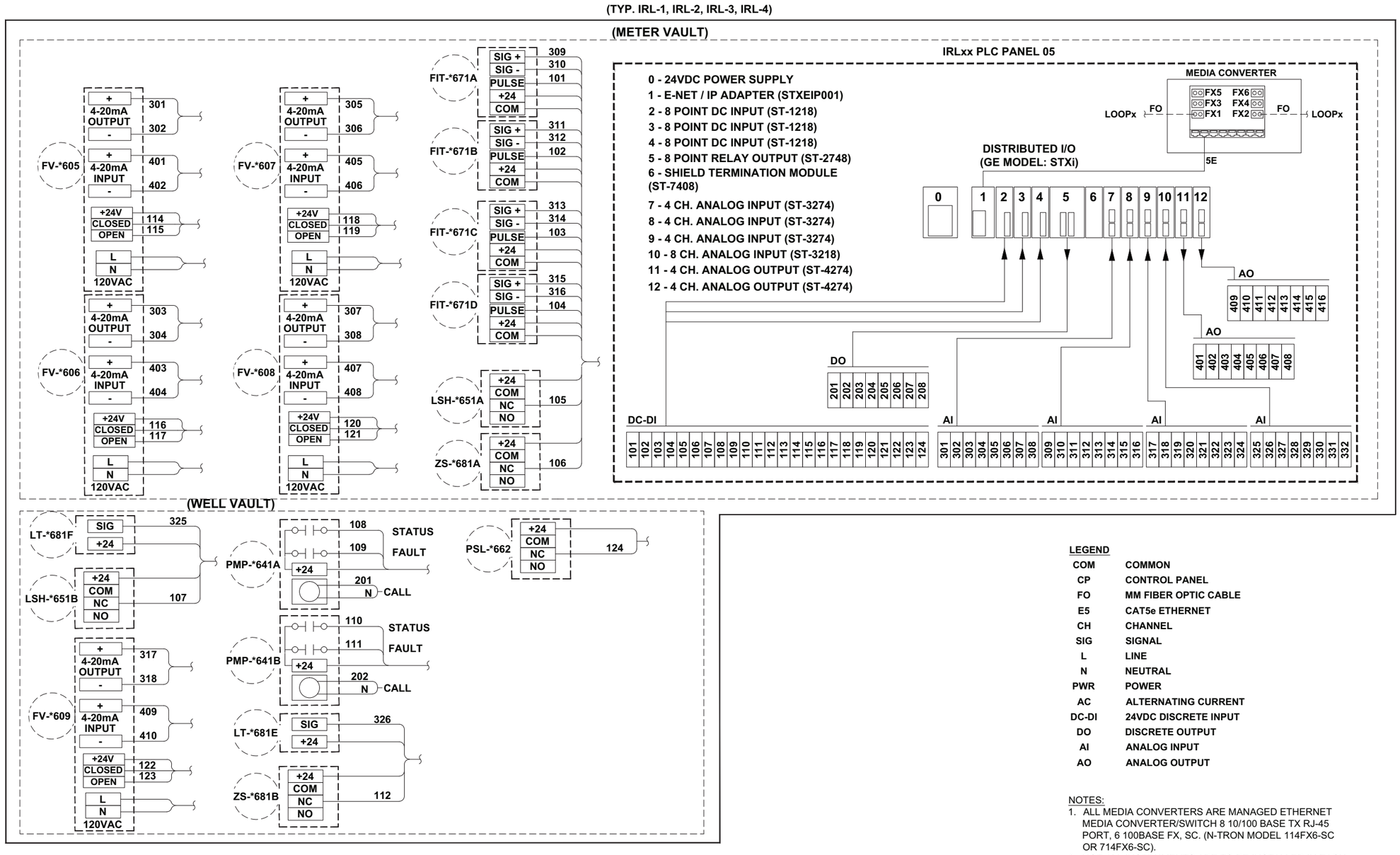

LEGEND

COM	COMMON
CP	CONTROL PANEL
FO	MM FIBER OPTIC CABLE
E5	CAT5e ETHERNET
CH	CHANNEL
SIG	SIGNAL
L	LINE
N	NEUTRAL
PWR	POWER
AC	ALTERNATING CURRENT
DC-DI	24VDC DISCRETE INPUT
DO	DISCRETE OUTPUT
AI	ANALOG INPUT
AO	ANALOG OUTPUT

NOTES:
1. ALL MEDIA CONVERTERS ARE MANAGED ETHERNET MEDIA CONVERTER/SWITCH 8 10/100 BASE TX RJ-45 PORT, 6 100BASE FX, SC. (N-TRON MODEL 114FX6-SC OR 714FX6-SC).
2. NOT ALL INSTRUMENTS ARE TO BE INSTALLED IN EACH IRL WELL. SEE I-05-02 AND I-05-03 FOR DETAILS.

- DRAFT -
NOT FOR
CONSTRUCTION

ARCADIS

NO.	DATE	DESCRIPTION	GM/SPEC	DWN	CHKD	SUPV	APVD	BY
1	09/08/14	PRE-FINAL (90%) DESIGN		MS	MWM	JPB	JEF	
0	04/05/13	INTERMEDIATE (60%) DESIGN		MS	MWM	JPB	JEF	

REVISIONS

APPROVED BY: JEF

SO	
SUPV	JPB
DSGN	MWM
DWN	MS
CHKD	JPB
OK	JEF
DATE	09/08/14
SCALES	NONE

TOPOCK GROUNDWATER REMEDIATION PROJECT
NODE 05 PLC PANELS
INSTRUMENTATION CONNECTION
SHEET 2 OF 2
GAS TRANSMISSION & DISTRIBUTION
PACIFIC GAS AND ELECTRIC COMPANY
SAN FRANCISCO, CALIFORNIA

MICROFILM
BILL OF MATL
DWG LIST
SUPSDS
SUPSD BY
SHEET NO. of SHEETS: I-05-06
REV: 1

N1808

08/27/2014, 10:48, G:\Graphics\ARITOPOCK-01\Post 96%\Controls\I).dwg, Tab: 5-06