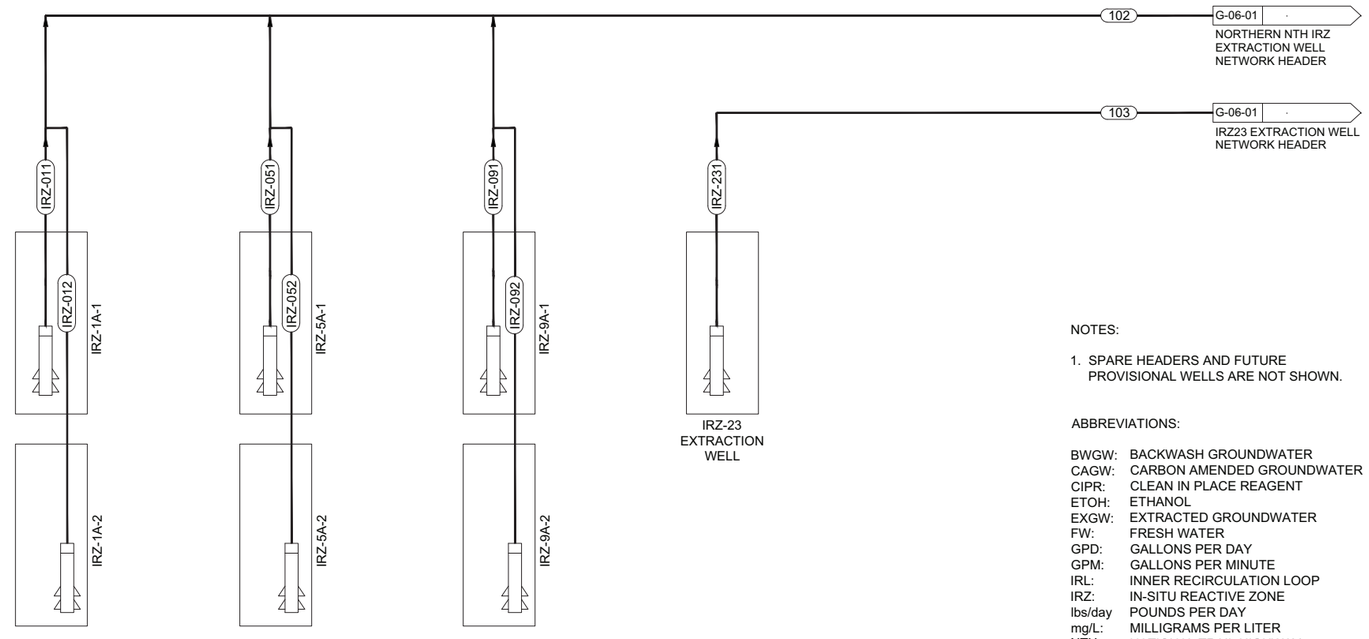

NATIONAL TRAILS HWY IRZ EXTRACTION WELL NETWORK

NOTES:

1. SPARE HEADERS AND FUTURE PROVISIONAL WELLS ARE NOT SHOWN.

ABBREVIATIONS:

BWGW:	BACKWASH GROUNDWATER
CAGW:	CARBON AMENDED GROUNDWATER
CIPR:	CLEAN IN PLACE REAGENT
ETOH:	ETHANOL
EXGW:	EXTRACTED GROUNDWATER
FW:	FRESH WATER
GPD:	GALLONS PER DAY
GPM:	GALLONS PER MINUTE
IRL:	INNER RECIRCULATION LOOP
IRZ:	IN-SITU REACTIVE ZONE
lbs/day	POUNDS PER DAY
mg/L:	MILLIGRAMS PER LITER
NTH:	NATIONAL TRAIL HIGHWAY
TOC:	TOTAL ORGANIC CARBON
TW:	TREATED WATER
WMR:	WELL MAINTENANCE REAGENT
µg/L:	MICROGRAMS PER LITER

Design Basis and Mass Balance[a]

Stream ID:	102	103	IRZ-011	IRZ-012	IRZ-051	IRZ-052	IRZ-091	IRZ-092	IRZ-231
Stream Description:	EXGW	EXGW	EXGW	EXGW	EXGW	EXGW	EXGW	EXGW	EXGW
Nominal Design Parameters									
Flow Rate (GPM):	200	100	20	20	40	40	40	40	100
Carbon Substrate[b,c] (GPD):	---	---	---	---	---	---	---	---	---
TOC[b,c] (mg/L):	---	---	---	---	---	---	---	---	---
Chromium[d] (µg/L):	26	2,300	29	38	36	39	13	10	2,300
Chromium[d] (lbs/day):	6.3E-02	2.8	6.9E-03	9.1E-03	1.7E-02	1.9E-02	6.2E-03	4.8E-03	2.8
Maximum Design Parameters									
Flow Rate (GPM):	400[e]		80	80	80	80	80	80	160
Carbon Substrate[b,c] (GPD):	---	---	---	---	---	---	---	---	---
TOC[b,c] (mg/L):	---	---	---	---	---	---	---	---	---
Chromium[d,f] (µg/L):	26	2,300	29	38	36	39	13	10	2,300
Chromium[d,f] (lbs/day):	3.7		2.8E-02	3.6E-02	3.4E-02	3.7E-02	1.2E-02	9.6E-03	4.4

a - Values represent target/estimated design parameters for initial operation; system operation may be modified to optimize system performance.
b - Denatured ethanol assumed; instantaneous dosage concentration will not exceed 1-percent by volume.
c - Average flow rate/concentration over time; carbon substrate dosing will be periodic and duration/frequency will vary.
d - Estimated initial concentration.
e - Total maximum NTH IRZ extracted groundwater flow limited to 400 gpm.
f - Maximum design parameters assume chromium concentrations and general flow distribution similar to nominal design parameters.

- DRAFT -
NOT FOR CONSTRUCTION

ARCADIS

NO.	DATE	DESCRIPTION	GM/SPEC	DWN	CHKD	SUPV	APVD	BY
1	09/08/14	PRE-FINAL (90%) DESIGN		KLD	BJW	JPB	JEF	
0	04/05/13	INTERMEDIATE (60%) DESIGN		KLD	BJW	JPB	JEF	

REVISIONS

APPROVED BY: JEF

SO
SUPV JPB
DSGN BJW
DWN KLD
CHKD JPB
OK JEF
DATE 09/08/14
SCALES NONE

TOPOCK GROUNDWATER REMEDIATION PROJECT

IRZ EXTRACTION WELL PROCESS FLOW DIAGRAM

GAS TRANSMISSION & DISTRIBUTION
PACIFIC GAS AND ELECTRIC COMPANY
SAN FRANCISCO, CALIFORNIA

MICROFILM
BILL OF MATL
DWG LIST
SUPSDS
SUPSD BY
SHEET NO. of SHEETS
G-04-01
REV 1

N1808

08/27/2014, 13:17, G:\Graphics\ARI\TOPOCK-01\Post 90%\PFD.dwg, Tab: G-04-01

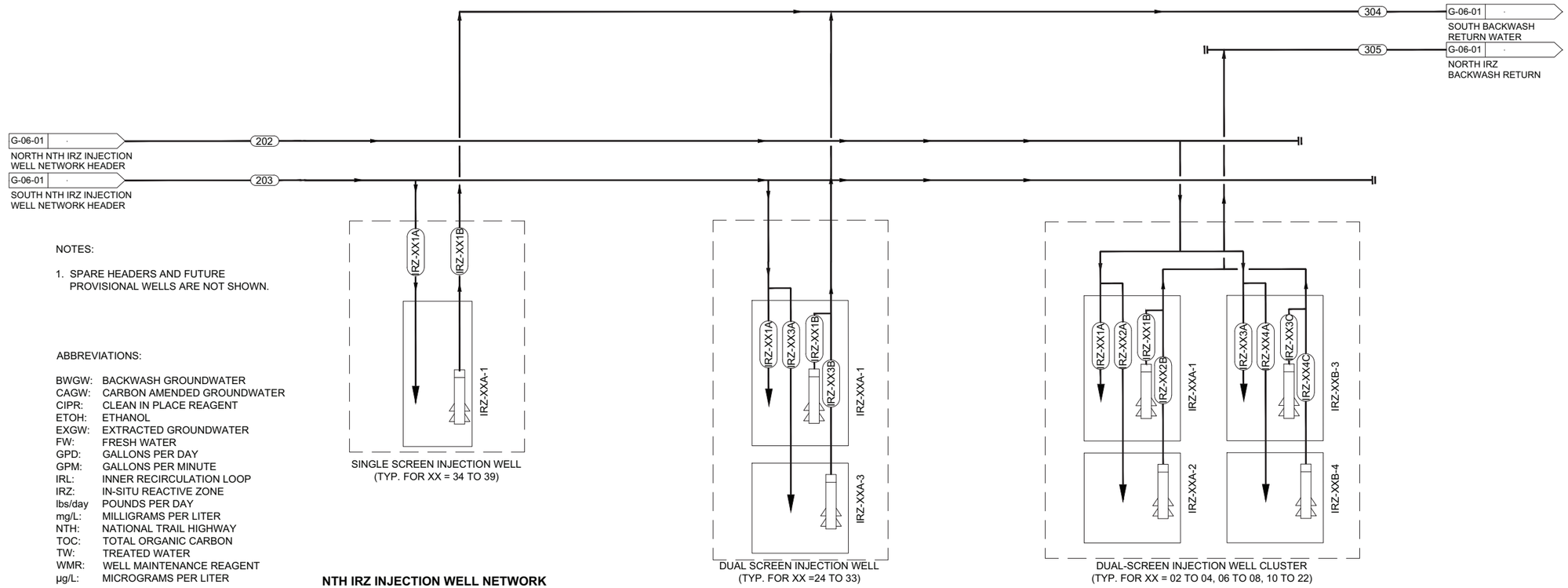

NOTES:

1. SPARE HEADERS AND FUTURE PROVISIONAL WELLS ARE NOT SHOWN.

ABBREVIATIONS:

BWGW:	BACKWASH GROUNDWATER
CAGW:	CARBON AMENDED GROUNDWATER
CIPR:	CLEAN IN PLACE REAGENT
ETOH:	ETHANOL
EXGW:	EXTRACTED GROUNDWATER
FW:	FRESH WATER
GPD:	GALLONS PER DAY
GPM:	GALLONS PER MINUTE
IRL:	INNER RECIRCULATION LOOP
IRZ:	IN-SITU REACTIVE ZONE
lbs/day	POUNDS PER DAY
mg/L:	MILLIGRAMS PER LITER
NTH:	NATIONAL TRAIL HIGHWAY
TOC:	TOTAL ORGANIC CARBON
TW:	TREATED WATER
WMR:	WELL MAINTENANCE REAGENT
µg/L:	MICROGRAMS PER LITER

NTH IRZ INJECTION WELL NETWORK

Design Basis and Mass Balance[a]

Stream ID:	202	203	304[f]	305[f]	IRZ-111A	IRZ-112A	IRZ-113A	IRZ-114A	IRZ-131A	IRZ-132A	IRZ-133A	IRZ-134A	IRZ-151A	IRZ-152A	IRZ-153A	IRZ-154A	IRZ-161A	IRZ-162A	IRZ-163A	IRZ-164A	IRZ-171A	IRZ-172A	IRZ-173A	IRZ-174A
Stream Description:	CAGW	CAGW	BWGW	BWGW	CAGW	CAGW	CAGW	CAGW	CAGW	CAGW	CAGW	CAGW	CAGW	CAGW	CAGW	CAGW	CAGW	CAGW	CAGW	CAGW	CAGW	CAGW	CAGW	CAGW
Nominal Design Parameters																								
Flow Rate (GPM):	300		17	20	10	10	10	10	9	9	9	9	7	7	7	7	6	6	6	6	7	7	7	7
Carbon Substrate[b,c] (GPD):	104		---	---	3.5	3.5	3.5	3.5	3.1	3.1	3.1	3.1	2.4	2.4	2.4	2.4	2.1	2.1	2.1	2.1	2.4	2.4	2.4	2.4
TOC[b,c] (mg/L):	100		---	---	100	100	100	100	100	100	100	100	100	100	100	100	100	100	100	100	100	100	100	100
Chromium[d] (µg/L):	---		---	---	---	---	---	---	---	---	---	---	---	---	---	---	---	---	---	---	---	---	---	---
Chromium[d] (lbs/day):	---		---	---	---	---	---	---	---	---	---	---	---	---	---	---	---	---	---	---	---	---	---	---
Maximum Design Parameters																								
Flow Rate (GPM):	400[e]		35	40	20	20	20	20	20	20	20	20	15	15	15	15	15	15	15	15	15	15	15	15
Carbon Substrate[b,c] (GPD):	694		---	---	35	35	35	35	35	35	35	35	26	26	26	26	26	26	26	26	26	26	26	26
TOC[b,c] (mg/L):	500		---	---	500	500	500	500	500	500	500	500	500	500	500	500	500	500	500	500	500	500	500	500
Chromium[d] (µg/L):	---		---	---	---	---	---	---	---	---	---	---	---	---	---	---	---	---	---	---	---	---	---	---
Chromium[d] (lbs/day):	---		---	---	---	---	---	---	---	---	---	---	---	---	---	---	---	---	---	---	---	---	---	---

Stream ID:	IRZ-191A	IRZ-192A	IRZ-193A	IRZ-194A	IRZ-201A	IRZ-202A	IRZ-203A	IRZ-204A	IRZ-211A	IRZ-212A	IRZ-213A	IRZ-214A	IRZ-251A	IRZ-253A	IRZ-271A	IRZ-273A	IRZ-291A	IRZ-293A	IRZ-311A	IRZ-313A	IRZ-331A	IRZ-333A	IRZ-351A	IRZ-371A	IRZ-391A	IRZ-XXXB	IRZ-XXXB
Stream Description:	CAGW	CAGW	CAGW	CAGW	CAGW	CAGW	CAGW	CAGW	CAGW	CAGW	CAGW	CAGW	CAGW	CAGW	CAGW	CAGW	CAGW	CAGW	CAGW	CAGW	CAGW	CAGW	CAGW	CAGW	CAGW	BWGW[g]	BWGW[g]
Nominal Design Parameters																											
Flow Rate (GPM):	7	7	7	7	4	4	4	4	5	5	5	5	8	8	8	8	7	7	6	6	4	4	6	4	4	h	h
Carbon Substrate[b,c] (GPD):	2.4	2.4	2.4	2.4	1.4	1.4	1.4	1.4	1.7	1.7	1.7	1.7	2.8	2.8	2.8	2.8	2.4	2.4	2.1	2.1	1.4	1.4	2.1	1.4	1.4	---	---
TOC[b,c] (mg/L):	100	100	100	100	100	100	100	100	100	100	100	100	100	100	100	100	100	100	100	100	100	100	100	100	100	---	---
Chromium[d] (µg/L):	---	---	---	---	---	---	---	---	---	---	---	---	---	---	---	---	---	---	---	---	---	---	---	---	---	---	---
Chromium[d] (lbs/day):	---	---	---	---	---	---	---	---	---	---	---	---	---	---	---	---	---	---	---	---	---	---	---	---	---	---	---
Maximum Design Parameters																											
Flow Rate (GPM):	13	13	13	13	13	13	13	13	10	10	10	10	18	18	18	18	15	15	13	13	13	13	15	10	5	h	h
Carbon Substrate[b,c] (GPD):	23	23	23	23	23	23	23	23	17	17	17	17	31	31	31	31	26	26	23	23	23	23	26	17	8.7	---	---
TOC[b,c] (mg/L):	500	500	500	500	500	500	500	500	500	500	500	500	500	500	500	500	500	500	500	500	500	500	500	500	500	---	---
Chromium[d] (µg/L):	---	---	---	---	---	---	---	---	---	---	---	---	---	---	---	---	---	---	---	---	---	---	---	---	---	---	---
Chromium[d] (lbs/day):	---	---	---	---	---	---	---	---	---	---	---	---	---	---	---	---	---	---	---	---	---	---	---	---	---	---	---

Typ. For XXX = 111 to 391 Typ. For XXX = 111 to 214

a - Values represent target/estimated design parameters for initial operation; system operation may be modified to optimize system performance.
b - Denatured ethanol assumed; instantaneous dosage concentration will not exceed 1-percent by volume.
c - Average flow rate/concentration over time; carbon substrate dosing will be periodic and duration/frequency will vary.
d - Estimated initial concentration.
e - Total maximum NTH IRZ injection well flow limited to 400 gpm.
f - Total backwash return water volume per week from NTH IRZ injection will network is approximately 18,000 gallons.
g - Single pump operation, in succession.
h - Backwash flow rate equals twice the nominal injection flow rate and twice the maximum injection flow rate.

- DRAFT -
NOT FOR CONSTRUCTION

ARCADIS

NO.	DATE	DESCRIPTION	GM/SPEC	DWN	CHKD	SUPV	APVD	BY
1	09/08/14	PRE-FINAL (90%) DESIGN		KLD	BJW	JPB	JEF	
0	04/05/13	INTERMEDIATE (60%) DESIGN		KLD	BJW	JPB	JEF	

REVISIONS

APPROVED BY: JEF

SO	
SUPV	JPB
DSGN	BJW
DWN	KLD
CHKD	JPB
OK	JEF
DATE	09/08/14
SCALES	NONE

TOPOCK GROUNDWATER REMEDIATION PROJECT

IRZ INJECTION WELL PROCESS FLOW DIAGRAM

GAS TRANSMISSION & DISTRIBUTION
PACIFIC GAS AND ELECTRIC COMPANY
SAN FRANCISCO, CALIFORNIA

MICROFILM
BILL OF MATL
DWG LIST
SUPSDS
SUPSD BY
SHEET NO. of SHEETS
G-04-02 REV 1

08/27/2014, 13:17, G:\Graphics\ARI\TOPOCK-01\Post 90%\PFD.dwg, Tab: G-04-02

N1808

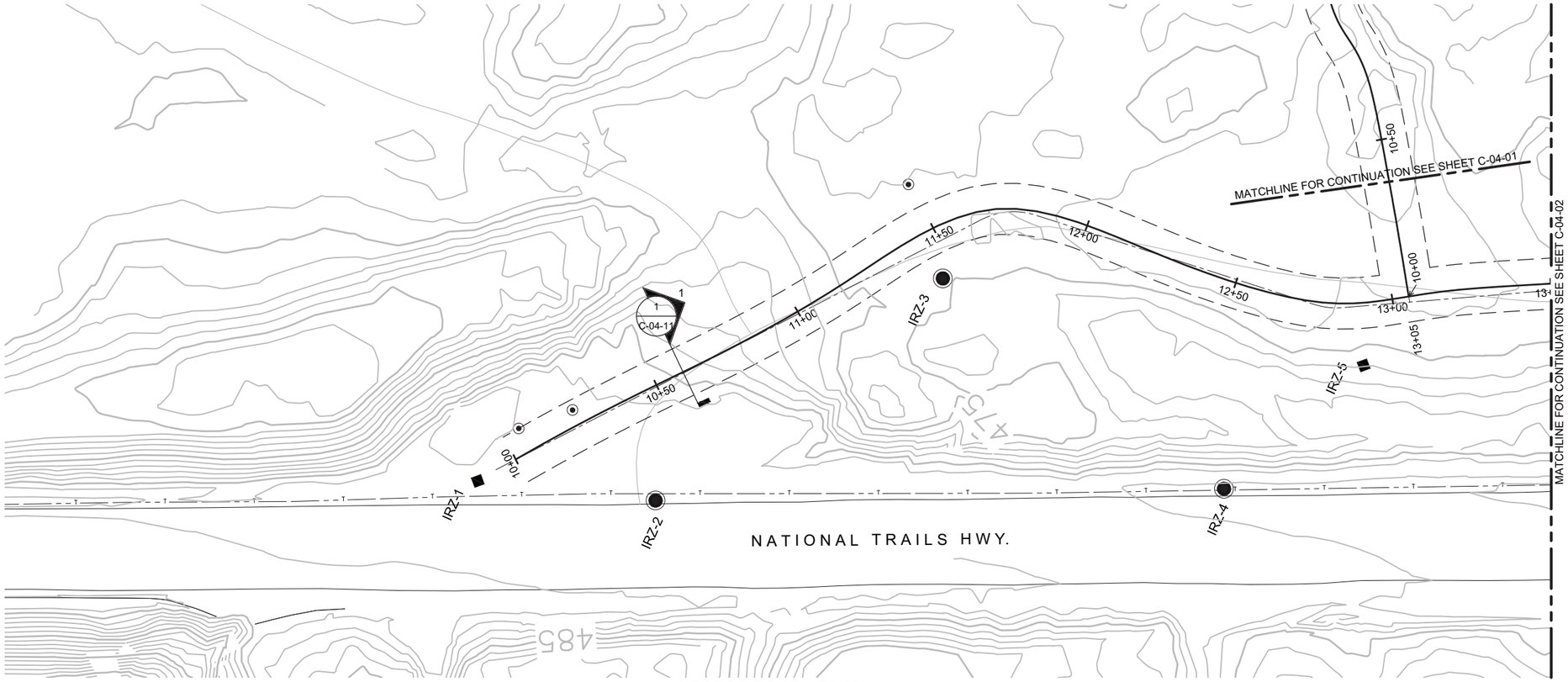

1 TYPICAL ACCESS ROAD CONSTRUCTION DETAIL CROSS SECTION SHOWN ON SHEET C-04-11.

0 20 40 60
HORIZ: SCALE: 1"=20'

0 10 20 30
VERT: SCALE: 1"=10'

ACCESS ROAD - PLAN

(SCALE: 1" = 20')

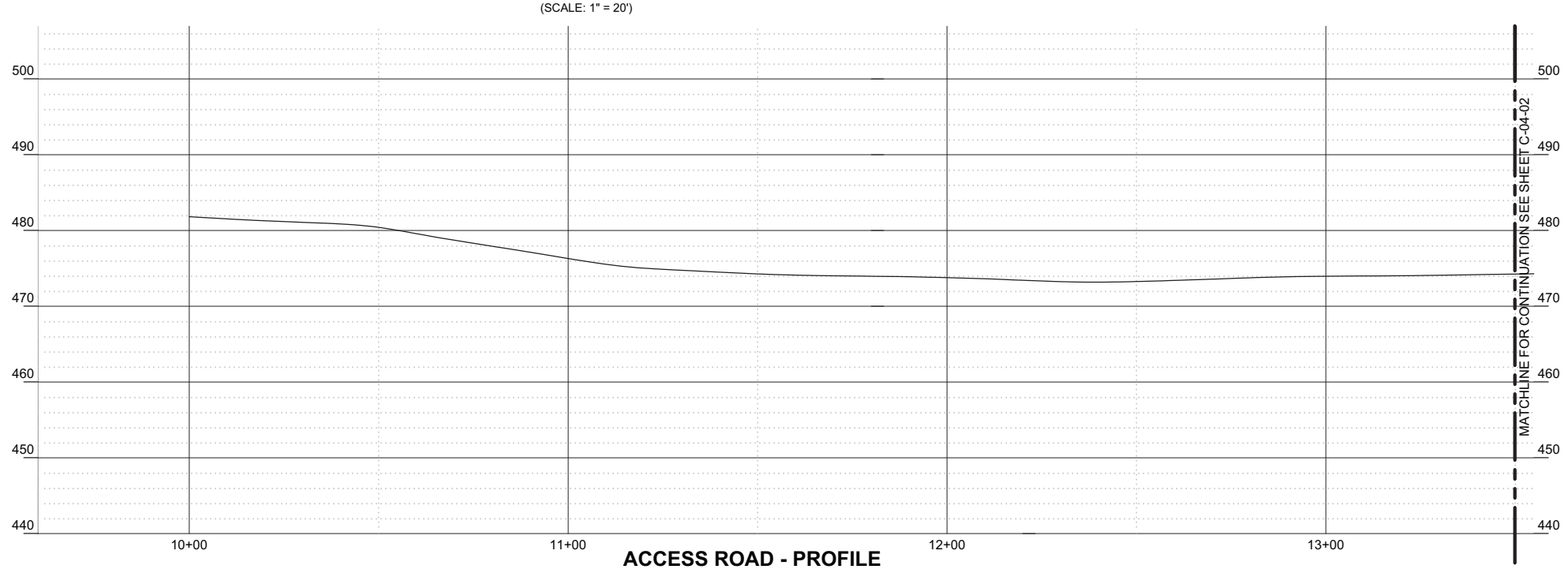

ACCESS ROAD - PROFILE

(SCALE: 1" = 20' H; 1" = 10' V)

- DRAFT -
NOT FOR
CONSTRUCTION

ETIC ENGINEERING

ARCADIS

NO.	DATE	DESCRIPTION	GM/SPEC	DWN	CHKD	SUPV	APVD	BY
1	09/08/14	PRE-FINAL (90%) DESIGN		AJW	BAS	JPB	JEF	
0	04/05/13	INTERMEDIATE (60%) DESIGN		AJW	KLD	JPB	JEF	

REVISIONS

APPROVED BY: JEF

SO	
SUPV	JPB
DSGN	BAS
DWN	AJW
CHKD	JPB
OK	JEF
DATE	09/08/14
SCALES	1" = 20'

TOPOCK GROUNDWATER REMEDIATION PROJECT

ACCESS ROAD- PLAN AND PROFILE - PIPELINE "C" STA 10+00 TO STA 13+50

GAS TRANSMISSION & DISTRIBUTION

PACIFIC GAS AND ELECTRIC COMPANY
SAN FRANCISCO, CALIFORNIA

MICROFILM
BILL OF MATL
DWG LIST
SUPSDS
SUPSD BY
SHEET NO. of SHEETS
C-04-01
REV 1

08/27/2014, 13:47, G:\Graphics\ARI\TOPOCK-01\Post 90%\C-04-01\b 11_C-05-08 to 13AccessRoad.dwg, Tab: C-04-01

N1808

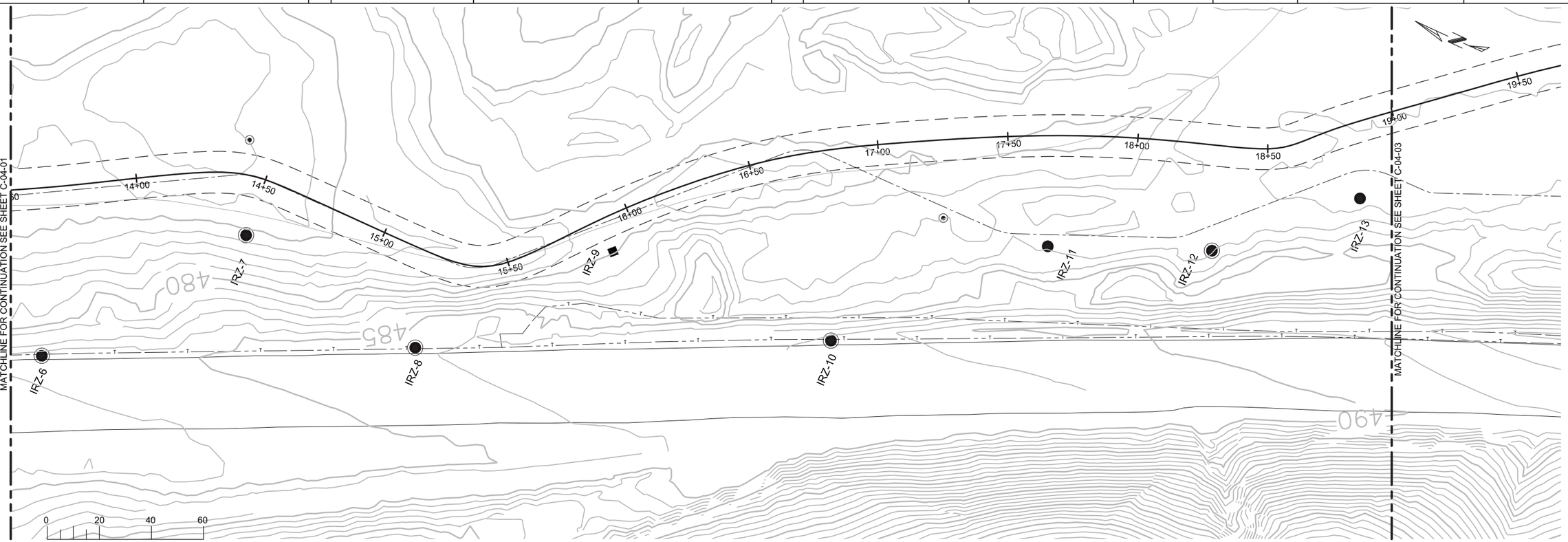

ACCESS ROAD - PLAN

(SCALE: 1" = 20')

NOTE:
TYPICAL ACCESS ROAD CONSTRUCTION DETAIL CROSS SECTION SHOWN ON SHEET C-04-11.

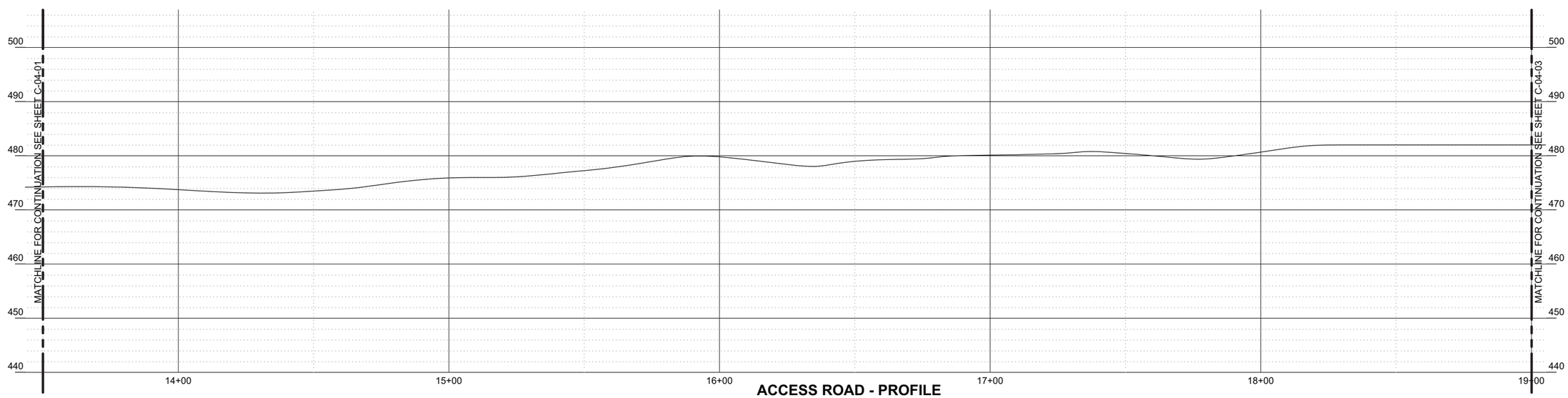

ACCESS ROAD - PROFILE

(SCALE: 1" = 20' H; 1" = 10' V)

- DRAFT -
NOT FOR
CONSTRUCTION

ETIC ENGINEERING

ARCADIS

NO.	DATE	DESCRIPTION	GM/SPEC	DWN	CHKD	SUPV	APVD BY
1	09/08/14	PRE-FINAL (90%) DESIGN		AJW	BAS	JPB	JEF
0	04/05/13	INTERMEDIATE (60%) DESIGN		AJW	KLD	JPB	JEF

REVISIONS

APPROVED BY	JEF
SO	
SUPV	JPB
DSGN	BAS
DWN	AJW
CHKD	JPB
OK	JEF
DATE	09/08/14
SCALES	1" = 20'

TOPOCK GROUNDWATER REMEDIATION PROJECT

ACCESS ROAD-
PLAN AND PROFILE - PIPELINE "C"
STA 13+50 TO STA 19+00

GAS TRANSMISSION & DISTRIBUTION
PACIFIC GAS AND ELECTRIC COMPANY
SAN FRANCISCO, CALIFORNIA

MICROFILM
BILL OF MATL
DWG LIST
SUPSDS
SUPSD BY
SHEET NO. of SHEETS
C-04-02
REV 1

08/27/2014, 13:48, G:\Graphics\ART\OPOCK-01\Post 90%\C-04-01\p 11_C-05-08 to 13AccessRoad.dwg, Tab: 02

N1B08

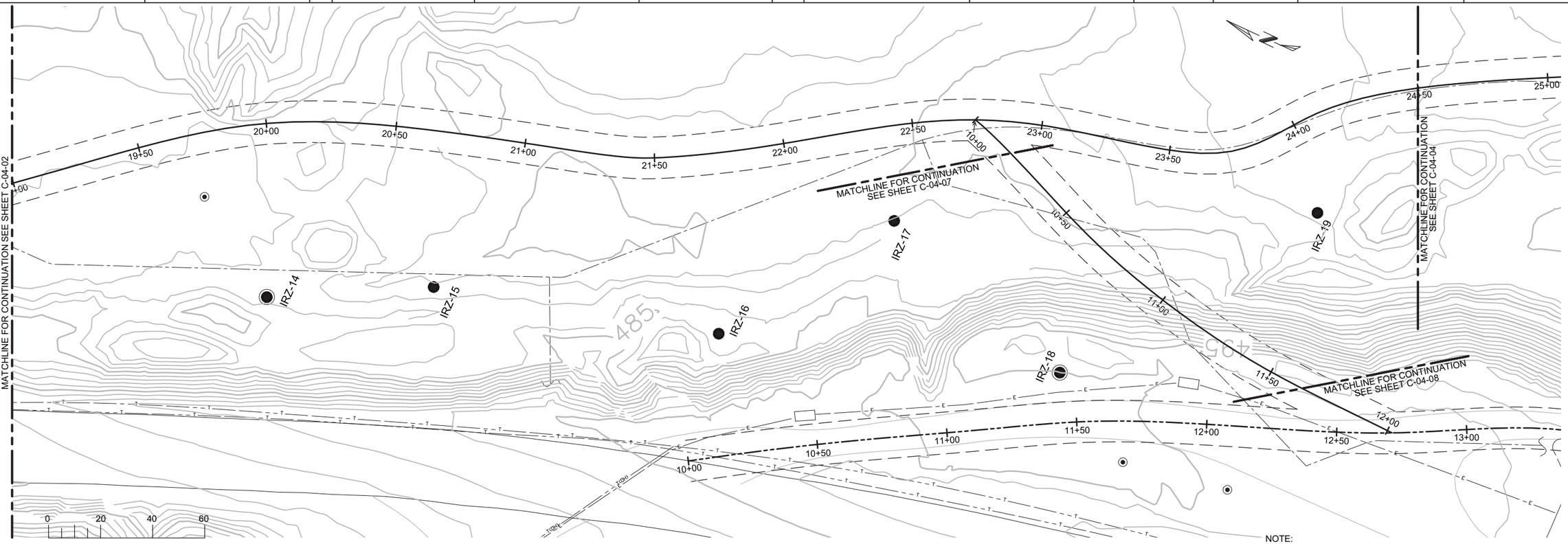

HORIZ: SCALE: 1"=20'

0 10 20 30

VERT: SCALE: 1"=10'

ACCESS ROAD - PLAN

(SCALE: 1" = 20')

NOTE:
TYPICAL ACCESS ROAD CONSTRUCTION DETAIL CROSS SECTION SHOWN ON SHEET C-04-11.

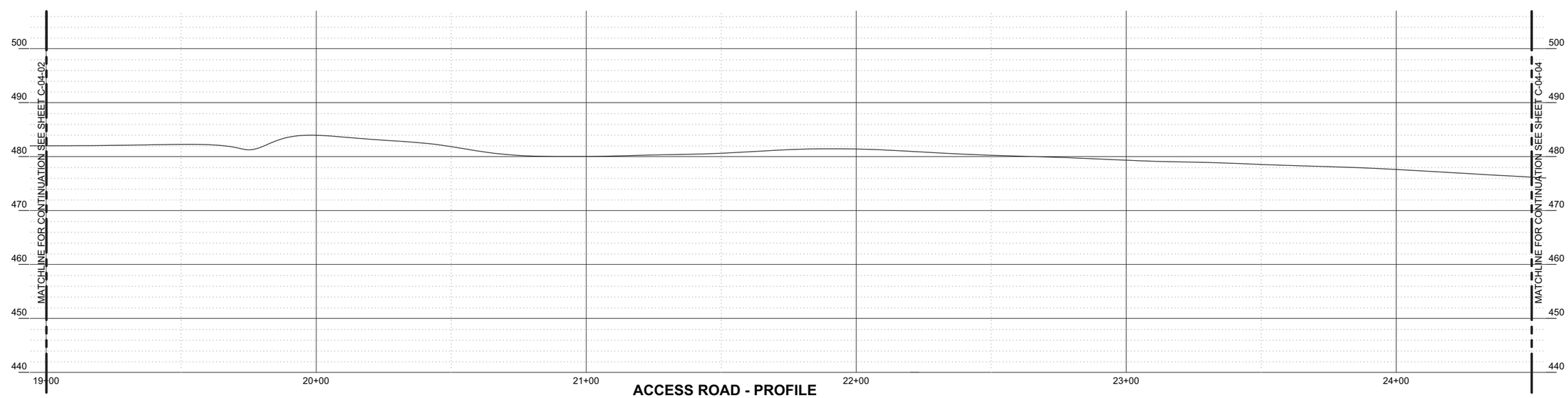

ACCESS ROAD - PROFILE

(SCALE: 1" = 20' H; 1" = 10' V)

- DRAFT -
NOT FOR CONSTRUCTION

ETIC ENGINEERING

ARCADIS

NO.	DATE	DESCRIPTION	GM/SPEC	DWN	CHKD	SUPV	APVD BY
1	09/08/14	PRE-FINAL (90%) DESIGN		AJW	BAS	JPB	JEF
0	04/05/13	INTERMEDIATE (60%) DESIGN		AJW	KLD	JPB	JEF

REVISIONS

APPROVED BY: JEF

SO
SUPV JPB
DSGN BAS
DWN AJW
CHKD JPB
OK JEF
DATE 09/08/14
SCALES 1" = 20'

TOPOCK GROUNDWATER REMEDIATION PROJECT

ACCESS ROAD- PLAN AND PROFILE - PIPELINE "C" STA 19+00 TO STA 24+50

GAS TRANSMISSION & DISTRIBUTION

PACIFIC GAS AND ELECTRIC COMPANY
SAN FRANCISCO, CALIFORNIA

MICROFILM
BILL OF MATL
DWG LIST
SUPSDS
SUPSD BY
SHEET NO. of SHEETS
C-04-03
REV 1

N1808

09/27/2014, 13:48, G:\Graphics\ARI\TOPOCK-01\Post 90%\C-04-01 to 11_C-05-08 to 13AccessRoad.dwg, Tab: 03

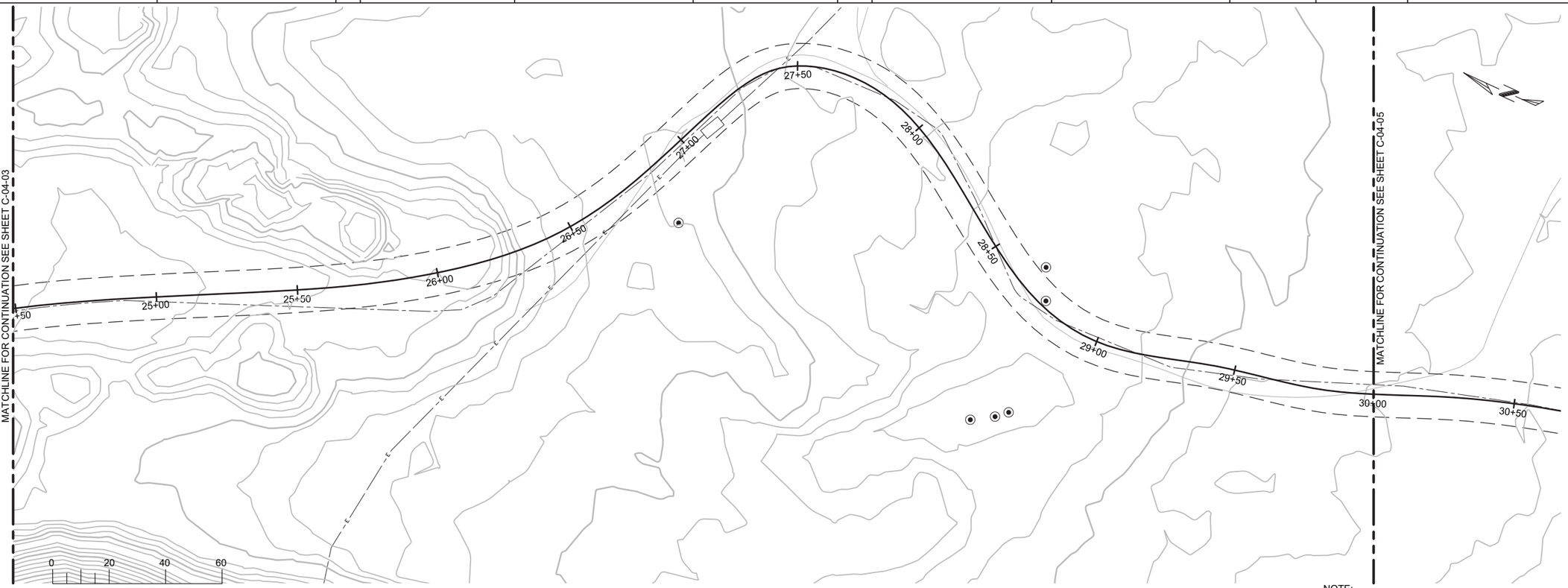

ACCESS ROAD - PLAN

(SCALE: 1" = 20')

NOTE:
TYPICAL ACCESS ROAD CONSTRUCTION DETAIL CROSS SECTION SHOWN ON SHEET C-04-11.

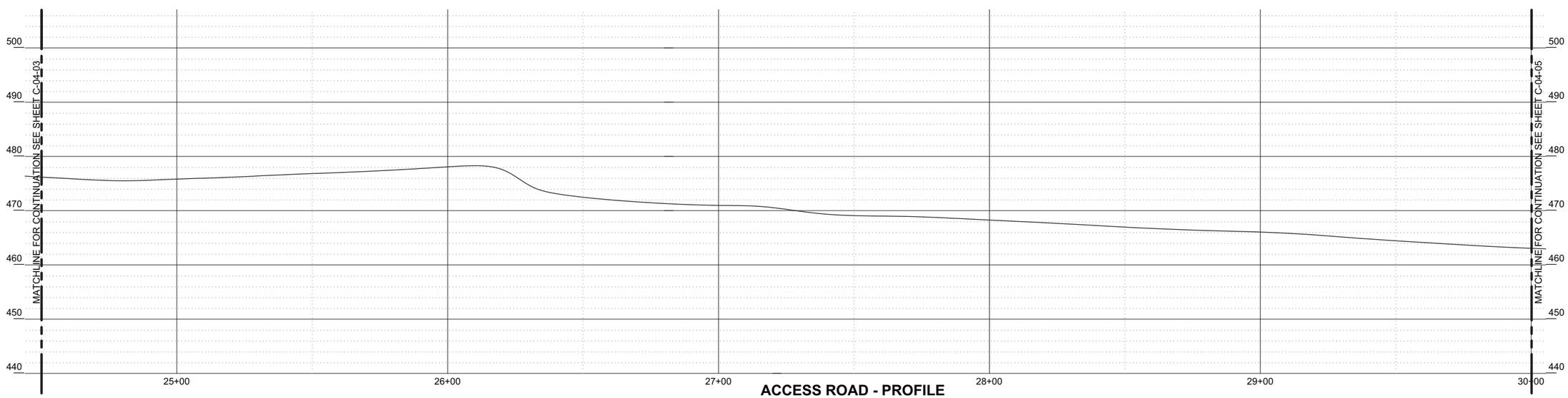

ACCESS ROAD - PROFILE

(SCALE: 1" = 20' H; 1" = 10' V)

- DRAFT -
NOT FOR
CONSTRUCTION

ETIC ENGINEERING

ARCADIS

NO.	DATE	DESCRIPTION	GM/SPEC	DWN	CHKD	SUPV	APVD BY
1	09/08/14	PRE-FINAL (90%) DESIGN	AJW	BAS	JPB	JEF	
0	04/05/13	INTERMEDIATE (60%) DESIGN	AJW	KLD	JPB	JEF	

REVISIONS

APPROVED BY: JEF

SO	
SUPV	JPB
DSGN	BAS
DWN	AJW
CHKD	JPB
OK	JEF
DATE	09/08/14
SCALES	1" = 20'

TOPOCK GROUNDWATER REMEDIATION PROJECT

ACCESS ROAD-
PLAN AND PROFILE - PIPELINE "C"
STA 24+50 TO STA 30+00

GAS TRANSMISSION & DISTRIBUTION
PACIFIC GAS AND ELECTRIC COMPANY
SAN FRANCISCO, CALIFORNIA

MICROFILM
BILL OF MATL
DWG LIST
SUPSDS
SUPSD BY
SHEET NO. of SHEETS
C-04-04
REV 1

N1808

08/27/2014, 13:48, G:\Graphics\ART\OPOCK-01\Post 90%\C-04-01 to 11_C-05-08 to 13AccessRoad.dwg, Tab: 04

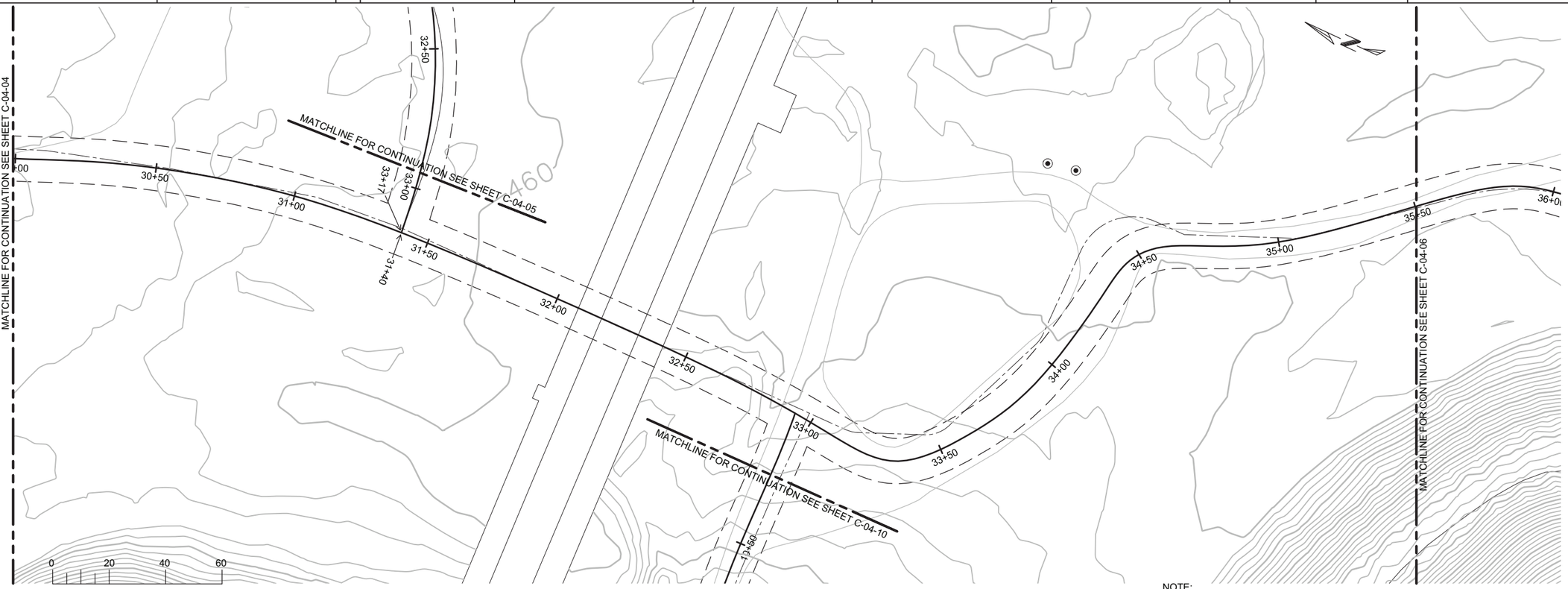

HORIZ: SCALE: 1"=20'

VERT: SCALE: 1"=10'

ACCESS ROAD - PLAN

(SCALE: 1" = 20')

NOTE:
TYPICAL ACCESS ROAD CONSTRUCTION DETAIL
CROSS SECTION SHOWN ON SHEET C-04-11.

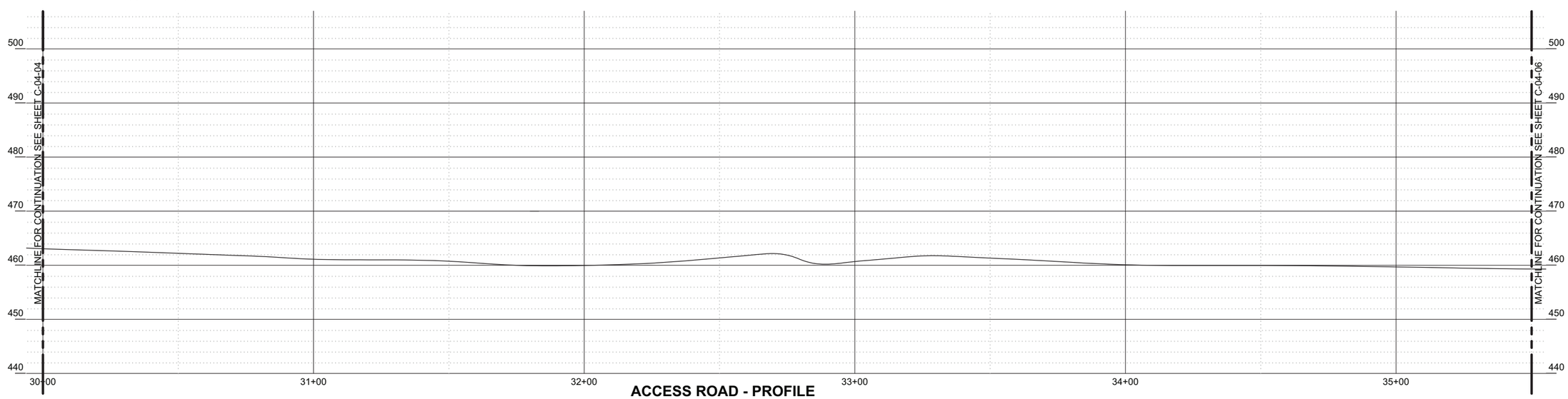

ACCESS ROAD - PROFILE

(SCALE: 1" = 20' H; 1" = 10' V)

- DRAFT -
NOT FOR
CONSTRUCTION

ETIC ENGINEERING

ARCADIS

NO.	DATE	DESCRIPTION	GM/SPEC	DWN	CHKD	SUPV	APVD BY
1	09/08/14	PRE-FINAL (90%) DESIGN	AJW	BAS	JPB	JEF	
0	04/05/13	INTERMEDIATE (60%) DESIGN	AJW	KLD	JPB	JEF	

REVISIONS

APPROVED BY: JEF

SO	
SUPV	JPB
DSGN	BAS
DWN	AJW
CHKD	JPB
OK	JEF
DATE	09/08/14
SCALES	1" = 20'

TOPOCK GROUNDWATER REMEDIATION PROJECT

ACCESS ROAD-
PLAN AND PROFILE - PIPELINE "C"
STA 30+00 TO STA 35+50

GAS TRANSMISSION & DISTRIBUTION
PACIFIC GAS AND ELECTRIC COMPANY
SAN FRANCISCO, CALIFORNIA

MICROFILM
BILL OF MATL
DWG LIST
SUPSDS
SUPSD BY
SHEET NO. of SHEETS
C-04-05
REV 1

09/27/2014, 13:48, G:\Graphics\ARI\TOPOCK-01\Post 90%\C-04-01 to 11_C-05-08 to 13AccessRoad.dwg, Tab: 05

N1808

NOTE:
TYPICAL ACCESS ROAD CONSTRUCTION DETAIL
CROSS SECTION SHOWN ON SHEET C-04-11.

ACCESS ROAD - PLAN

(SCALE: 1" = 20')

0 20 40 60
HORIZ: SCALE: 1"=20'

0 10 20 30
VERT: SCALE: 1"=10'

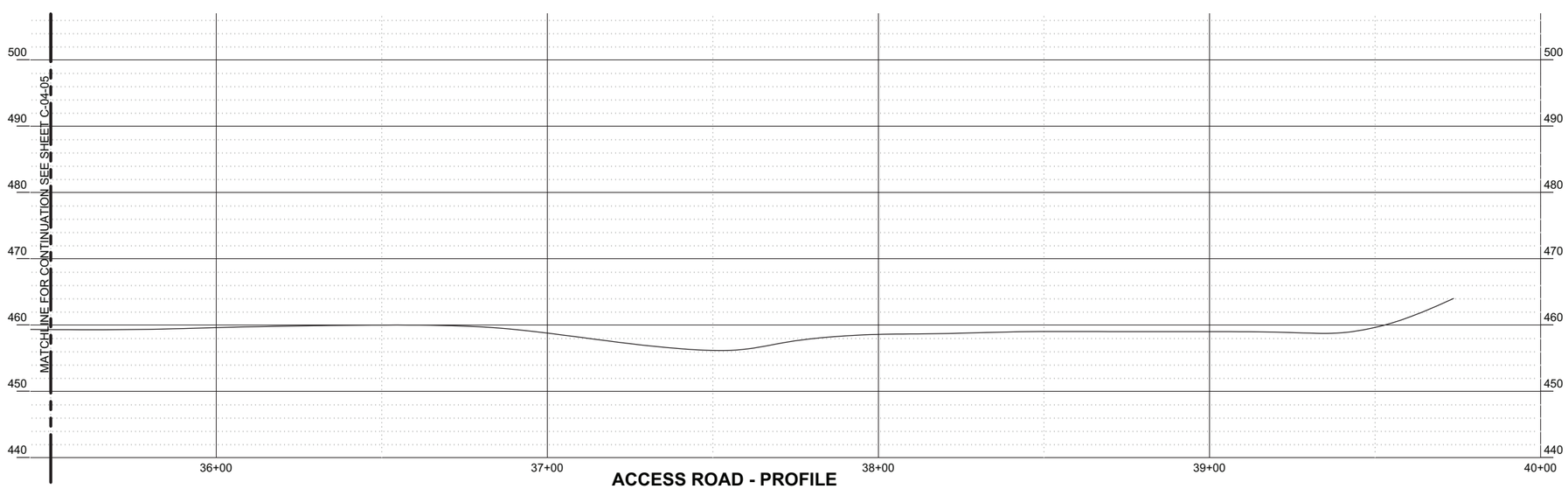

ACCESS ROAD - PROFILE

(SCALE: 1" = 20' H; 1" = 10' V)

- DRAFT -
NOT FOR
CONSTRUCTION

ETIC ENGINEERING

ARCADIS

NO.	DATE	DESCRIPTION	GM/SPEC	DWN	CHKD	SUPV	APVD BY
1	09/08/14	PRE-FINAL (90%) DESIGN		AJW	BAS	JPB	JEF
0	04/05/13	INTERMEDIATE (60%) DESIGN		AJW	KLD	JPB	JEF

REVISIONS

APPROVED BY: JEF

SO	
SUPV	JPB
DSGN	BAS
DWN	AJW
CHKD	JPB
OK	JEF
DATE	09/08/14
SCALES	1" = 20'

TOPOCK GROUNDWATER REMEDIATION PROJECT

ACCESS ROAD-
PLAN AND PROFILE - PIPELINE "C"
STA 35+50 TO STA 39+50

GAS TRANSMISSION & DISTRIBUTION
PACIFIC GAS AND ELECTRIC COMPANY
SAN FRANCISCO, CALIFORNIA

MICROFILM
BILL OF MATL
DWG LIST
SUPSDS
SUPSD BY
SHEET NO. of SHEETS
C-04-06
REV 1

N1808

09/27/2014, 13:49, G:\Graphics\ARI\TOPOCK-01\Post 90%\C-04-01 to 11_C-05-08 to 13AccessRoad.dwg, Tab: 06

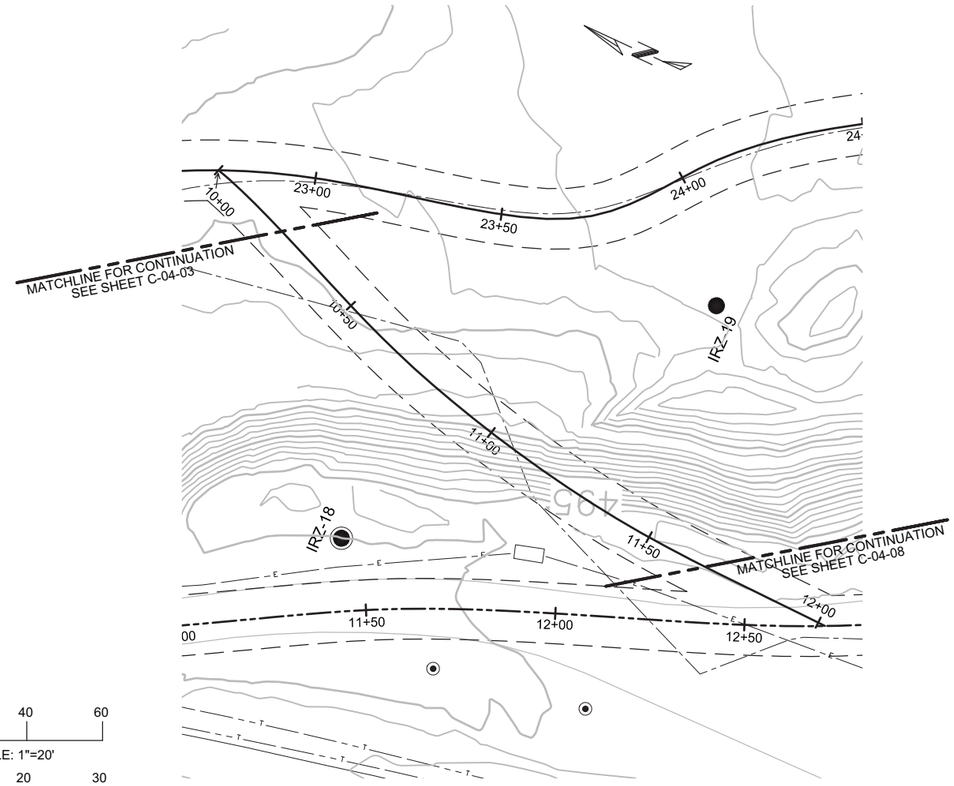

NOTE:
TYPICAL ACCESS ROAD CONSTRUCTION DETAIL
CROSS SECTION SHOWN ON SHEET C-04-11.

0 20 40 60
HORIZ: SCALE: 1"=20'

0 10 20 30
VERT: SCALE: 1"=10'

ACCESS ROAD - PLAN

(SCALE: 1" = 20')

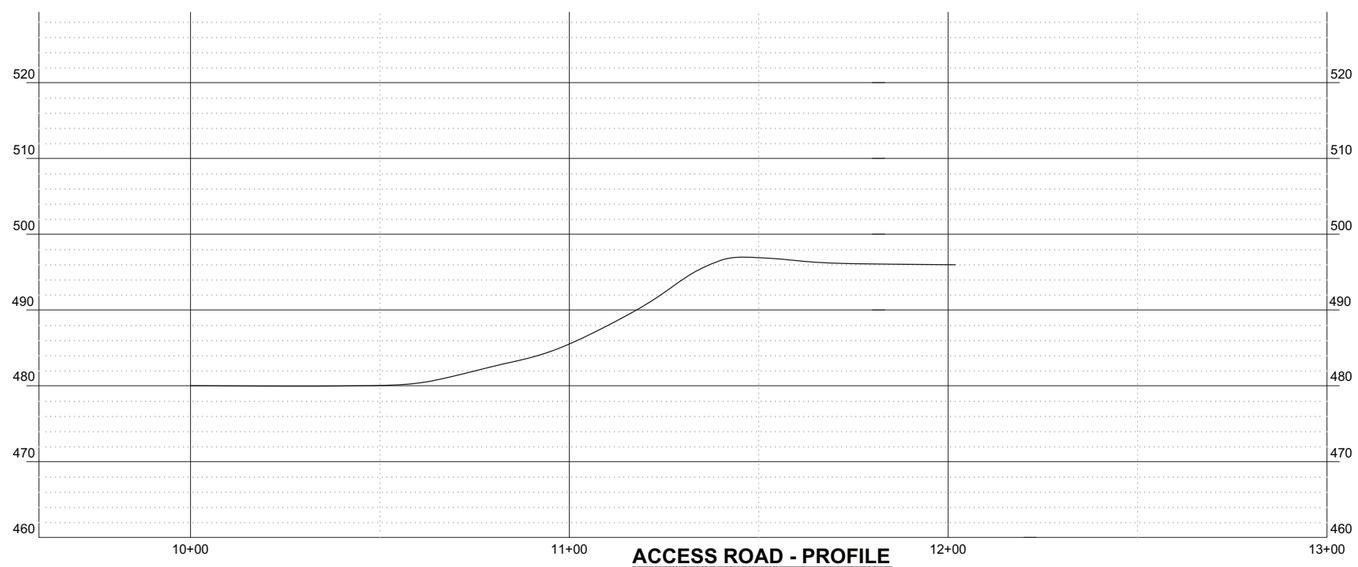

ACCESS ROAD - PROFILE

(SCALE: 1" = 20' H; 1" = 10' V)

- DRAFT -
NOT FOR
CONSTRUCTION

ETIC ENGINEERING

ARCADIS

NO.	DATE	DESCRIPTION	GM/SPEC	DWN	CHKD	SUPV	APVD BY
1	09/08/14	PRE-FINAL (90%) DESIGN		AJW	BAS	JPB	JEF
0	04/05/13	INTERMEDIATE (60%) DESIGN		AJW	KLD	JPB	JEF

REVISIONS

APPROVED BY: JEF

SO	
SUPV	JPB
DSGN	BAS
DWN	AJW
CHKD	JPB
OK	JEF
DATE	09/08/14
SCALES	1" = 20'

TOPOCK GROUNDWATER REMEDIATION PROJECT

ACCESS ROAD-
PLAN AND PROFILE - PIPELINE "C"
STA 10+00 TO STA 12+02

GAS TRANSMISSION & DISTRIBUTION
PACIFIC GAS AND ELECTRIC COMPANY
SAN FRANCISCO, CALIFORNIA

MICROFILM
BILL OF MATL
DWG LIST
SUPSDS
SUPSD BY
SHEET NO. of SHEETS
C-04-07
REV 1

N1808

08/27/2014, 13:49, G:\Graphics\ART\TOPOCK-01\Post 90%\C-04-01 to 11_C-05-08 to 13AccessRoad.dwg, Tab: 07

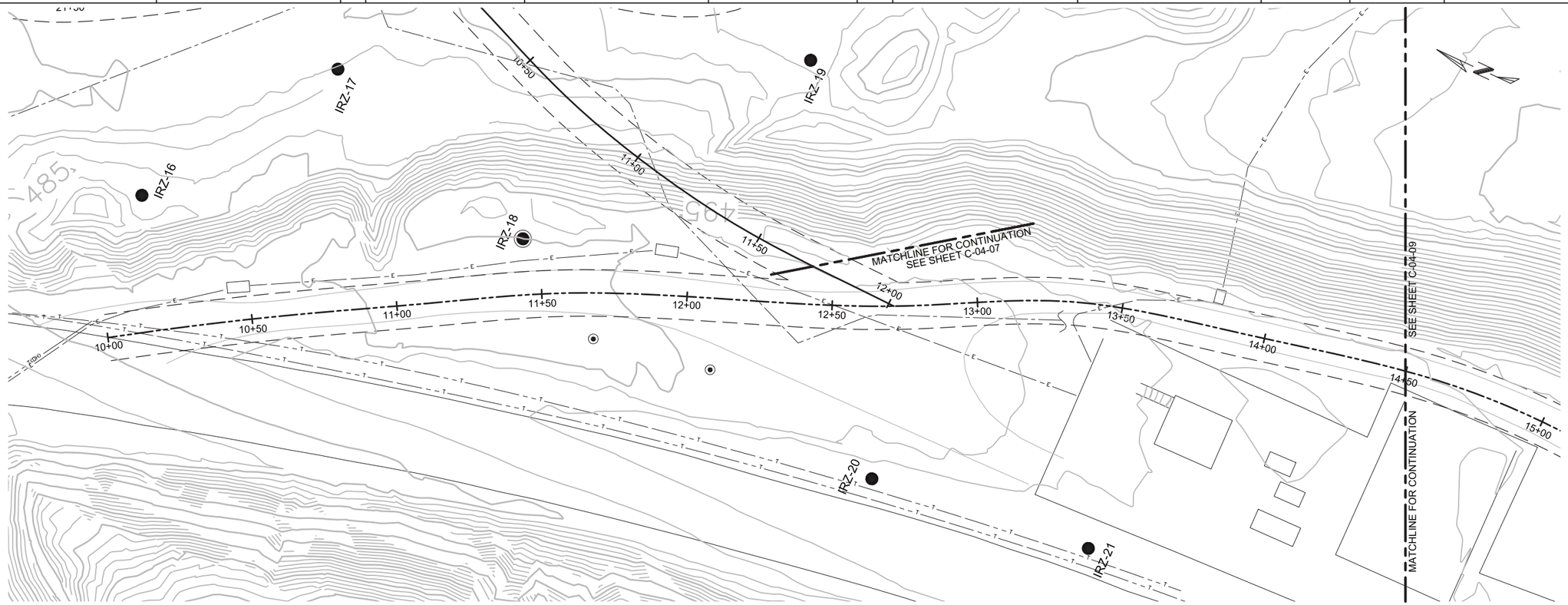

NOTE:
TYPICAL ACCESS ROAD CONSTRUCTION DETAIL CROSS SECTION SHOWN ON SHEET C-04-11.

ACCESS ROAD - PLAN

(SCALE: 1" = 20')

0 20 40 60
HORIZ: SCALE: 1"=20'

0 10 20 30
VERT: SCALE: 1"=10'

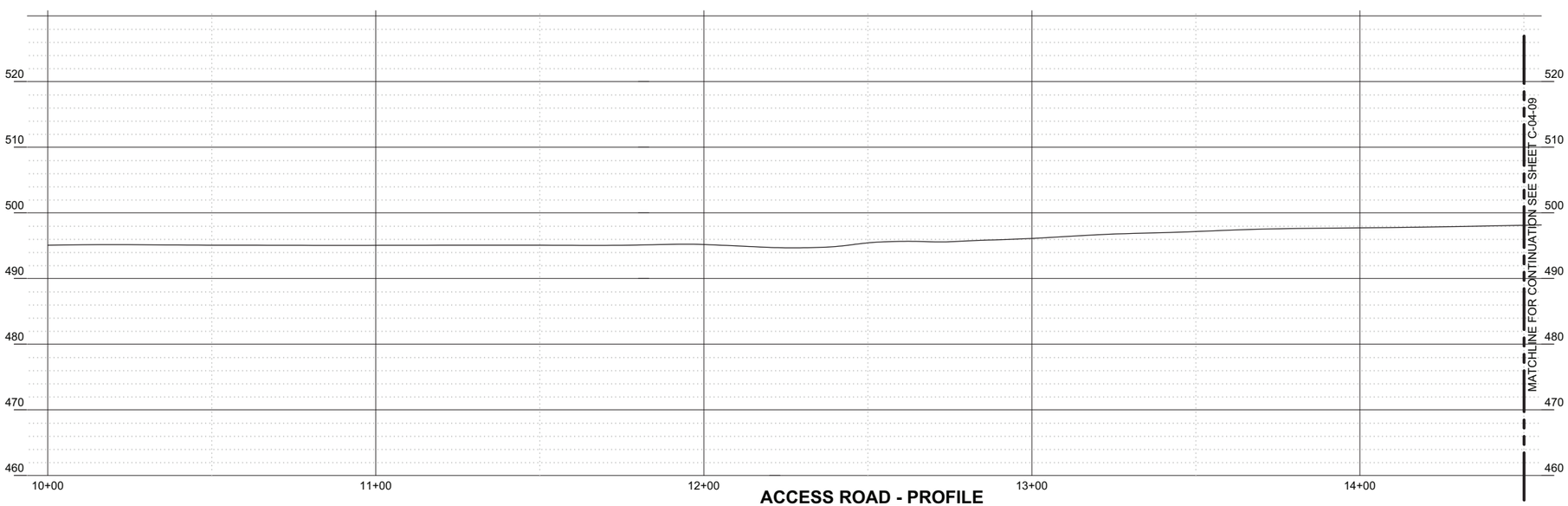

ACCESS ROAD - PROFILE

(SCALE: 1" = 20' H; 1" = 10' V)

- DRAFT -
NOT FOR
CONSTRUCTION

ETIC ENGINEERING

ARCADIS

NO.	DATE	DESCRIPTION	GM/SPEC	DWN	CHKD	SUPV	APVD BY
1	09/08/14	PRE-FINAL (90%) DESIGN		AJW	BAS	JPB	JEF
0	04/05/13	INTERMEDIATE (60%) DESIGN		AJW	KLD	JPB	JEF

REVISIONS

APPROVED BY: JEF

SO	
SUPV	JPB
DSGN	BAS
DWN	AJW
CHKD	JPB
OK	JEF
DATE	09/08/14
SCALES	1" = 20'

TOPOCK GROUNDWATER REMEDIATION PROJECT

ACCESS ROAD-
PLAN AND PROFILE - PIPELINE "C"
STA 10+00 TO STA 14+50

GAS TRANSMISSION & DISTRIBUTION
PACIFIC GAS AND ELECTRIC COMPANY
SAN FRANCISCO, CALIFORNIA

MICROFILM
BILL OF MATL
DWG LIST
SUPSDS
SUPSD BY
SHEET NO. of SHEETS
C-04-08
REV 1

08/27/2014, 13:49, G:\Graphics\AR\TOPOCK-01\Post 90%\C-04-01 to 11_C-05-08 to 13AccessRoad.dwg, Tab: 08

N1B08

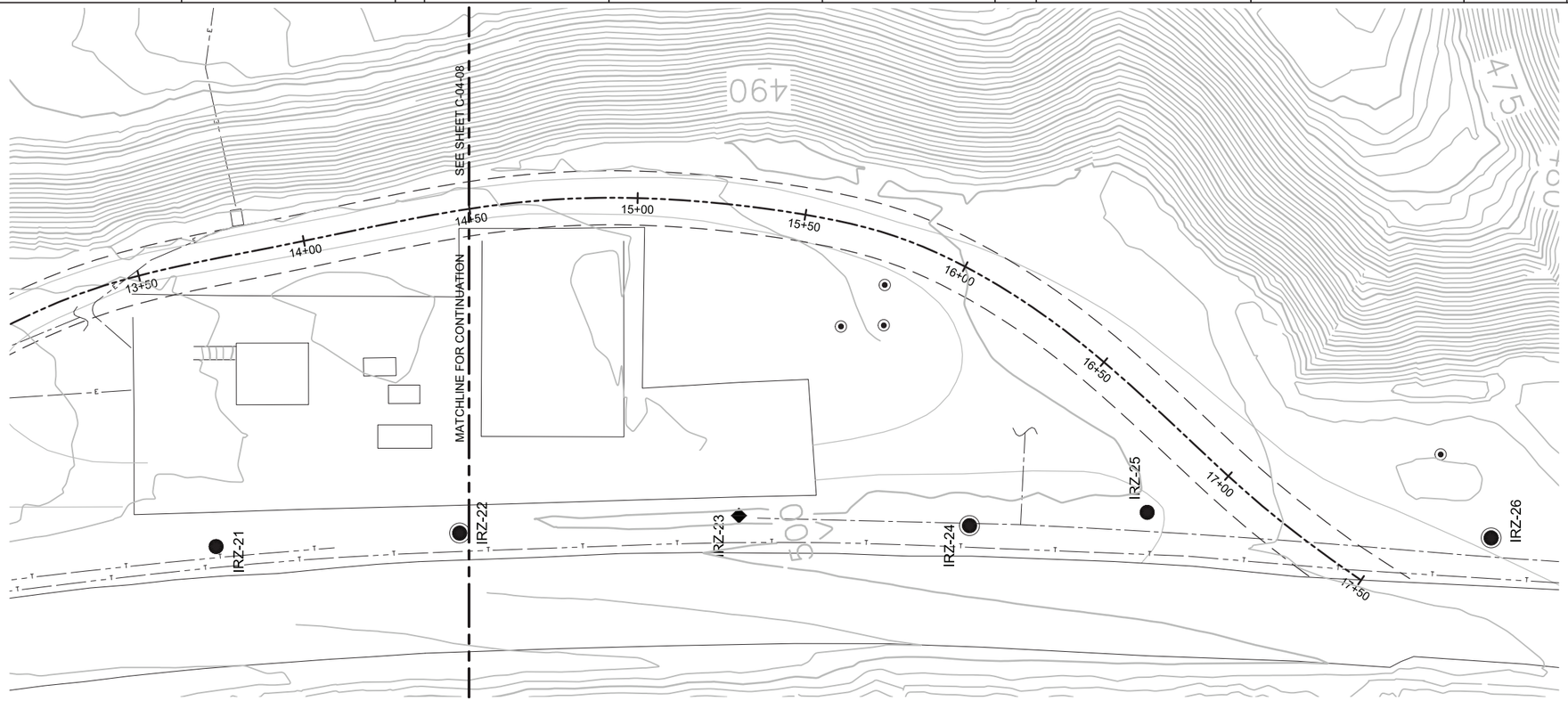

NOTE:
TYPICAL ACCESS ROAD CONSTRUCTION DETAIL
CROSS SECTION SHOWN ON SHEET C-04-11.

0 20 40 60
HORIZ: SCALE: 1"=20'

0 10 20 30
VERT: SCALE: 1"=10'

ACCESS ROAD - PLAN

(SCALE: 1" = 20')

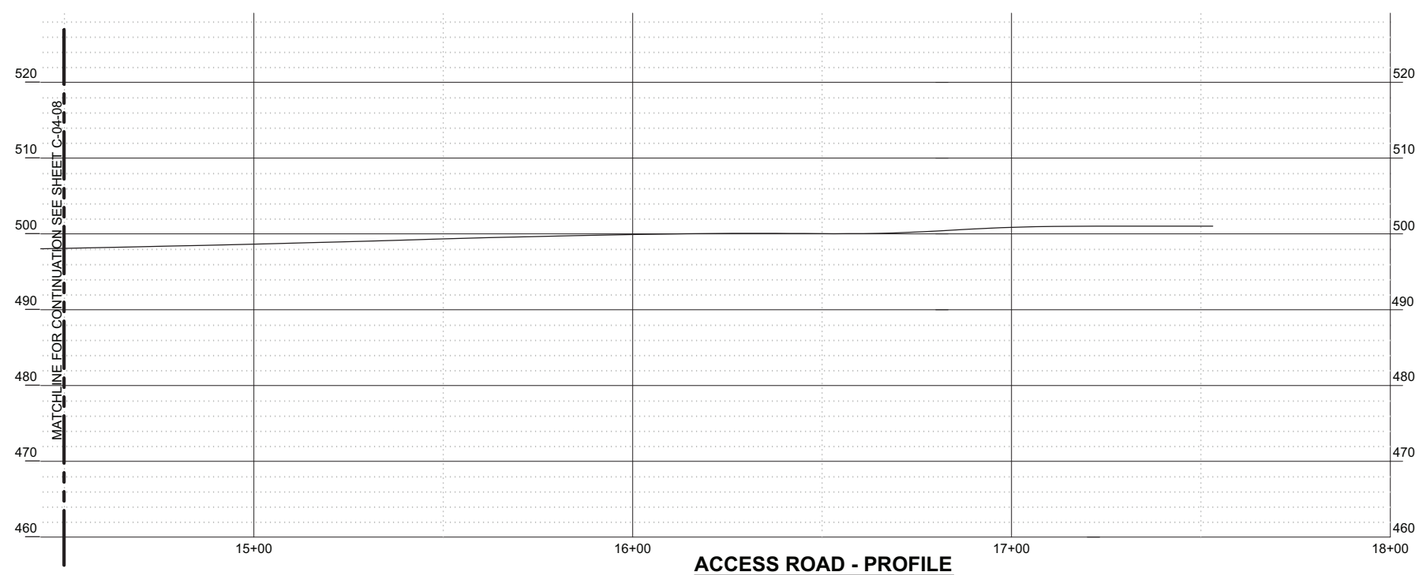

ACCESS ROAD - PROFILE

(SCALE: 1" = 20' H; 1" = 10' V)

- DRAFT -
NOT FOR
CONSTRUCTION

ETIC ENGINEERING

ARCADIS

NO.	DATE	DESCRIPTION	GM/SPEC	DWN	CHKD	SUPV	APVD BY
1	09/08/14	PRE-FINAL (90%) DESIGN		AJW	BAS	JPB	JEF
0	04/05/13	INTERMEDIATE (60%) DESIGN		AJW	KLD	JPB	JEF

REVISIONS

APPROVED BY: JEF

SO	
SUPV	JPB
DSGN	BAS
DWN	AJW
CHKD	JPB
OK	JEF
DATE	09/08/14
SCALES	1" = 20'

TOPOCK GROUNDWATER REMEDIATION PROJECT

ACCESS ROAD- PLAN AND PROFILE - PIPELINE "C" STA 14+50 TO STA 17+50

GAS TRANSMISSION & DISTRIBUTION
PACIFIC GAS AND ELECTRIC COMPANY
SAN FRANCISCO, CALIFORNIA

MICROFILM
BILL OF MATL
DWG LIST
SUPSDS
SUPSD BY
SHEET NO. of SHEETS
C-04-09
REV 1

08/27/2014, 13:49, G:\Graphics\AR\TOPOCK-01\Post 90%\C-04-01 to 11_C-05-08 to 13AccessRoad.dwg, Tab: 09

N1808

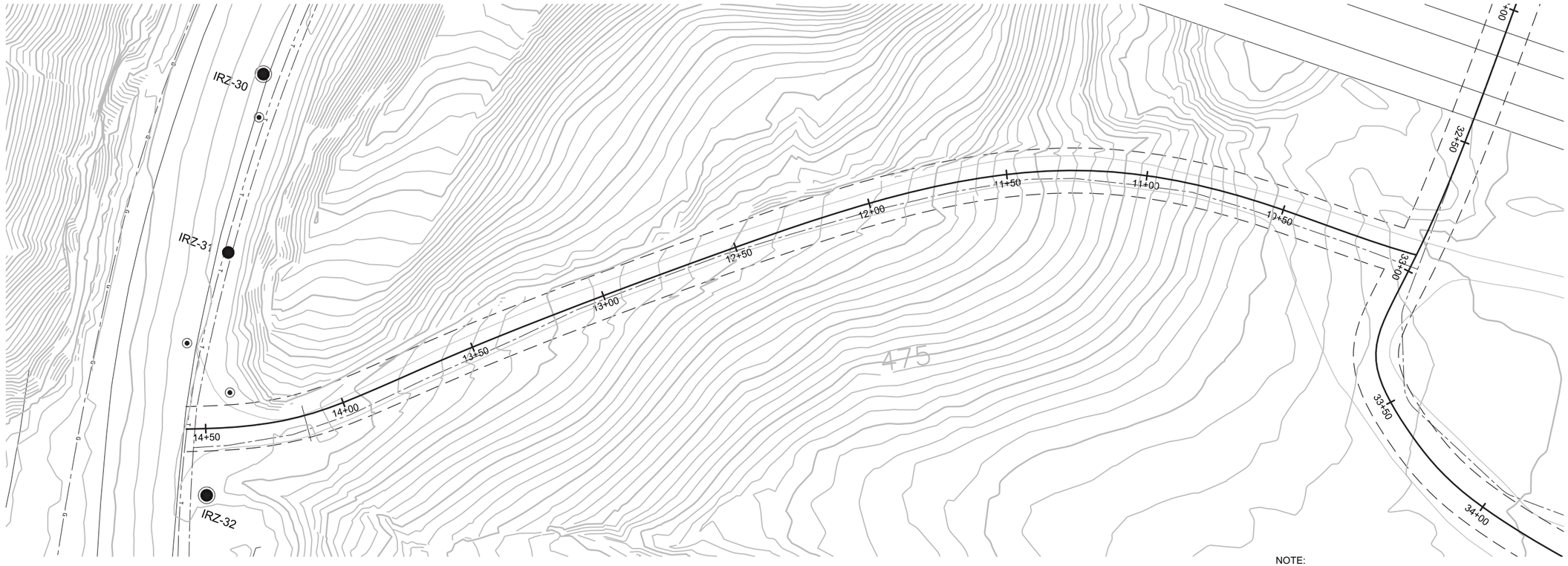

NOTE:
TYPICAL ACCESS ROAD CONSTRUCTION DETAIL
CROSS SECTION SHOWN ON SHEET C-04-11.

0 20 40 60
HORIZ: SCALE: 1"=20'

0 10 20 30
VERT: SCALE: 1"=10'

ACCESS ROAD - PLAN

(SCALE: 1" = 20')

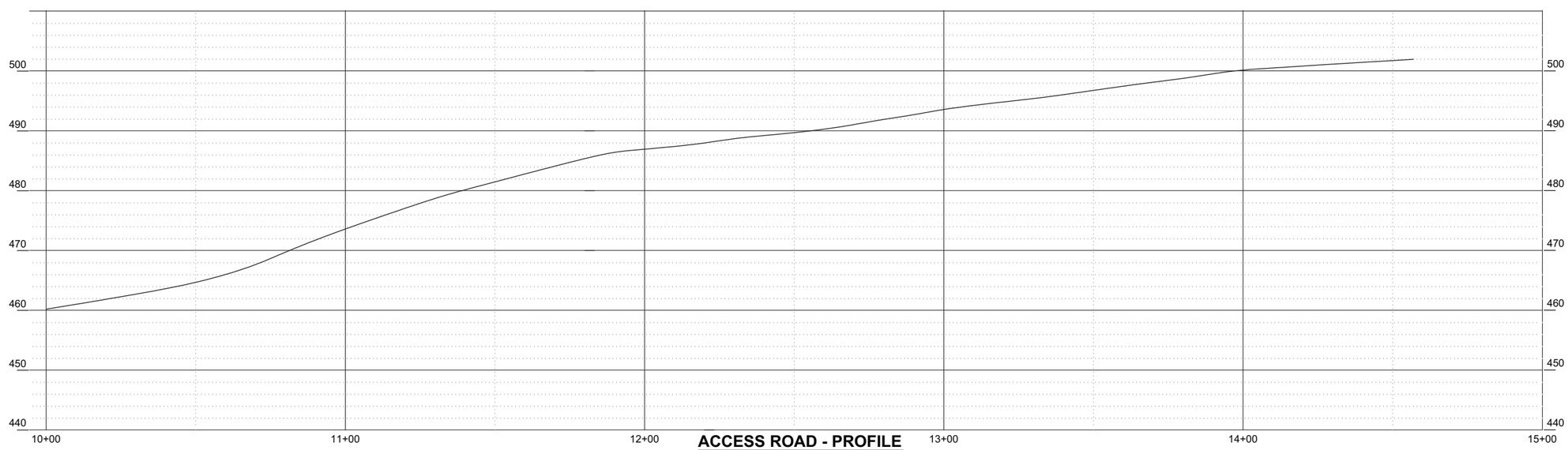

ACCESS ROAD - PROFILE

(SCALE: 1" = 20' H; 1" = 10' V)

- DRAFT -
NOT FOR
CONSTRUCTION

ETIC ENGINEERING

ARCADIS

NO.	DATE	DESCRIPTION	GM/SPEC	DWN	CHKD	SUPV	APVD BY
1	09/08/14	PRE-FINAL (90%) DESIGN		AJW	BAS	JPB	JEF
0	04/05/13	INTERMEDIATE (60%) DESIGN		AJW	KLD	JPB	JEF

REVISIONS

APPROVED BY: JEF

SO	
SUPV	JPB
DSGN	BAS
DWN	AJW
CHKD	JPB
OK	JEF
DATE	09/08/14
SCALES	1" = 20'

TOPOCK GROUNDWATER REMEDIATION PROJECT

ACCESS ROAD-
PLAN AND PROFILE - PIPELINE "C"
STA 10+00 TO STA 14+58

GAS TRANSMISSION & DISTRIBUTION

PACIFIC GAS AND ELECTRIC COMPANY
SAN FRANCISCO, CALIFORNIA

MICROFILM
BILL OF MATL
DWG LIST
SUPSDS
SUPSD BY
SHEET NO. of SHEETS
C-04-10
REV 1

N1808

08/27/2014, 13:50, G:\Graphics\ART\TOPOCK-01\Post 90%\C-04-01 to 11_C-05-08 to 13AccessRoad.dwg, Tab: 10

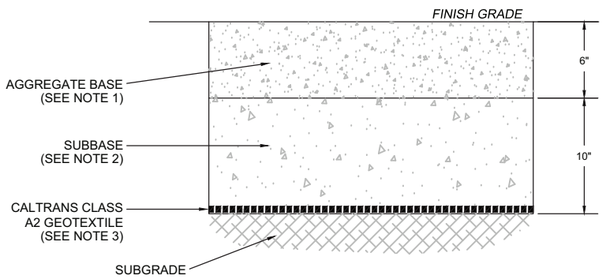

NOTES:
1. AGGREGATE BASE MATERIAL SHOULD MEET CALTRANS SPECIFICATION FOR CLASS 2 AGGREGATE BASE.
2. SUBBASE MATERIAL SHOULD MEET CALTRANS SPECIFICATION FOR CLASS 2 AGGREGATE BASE OR CLASS 1 OR 2 AGGREGATE SUBBASE.
3. IF ONLY CLASS 2 AGGREGATE BASE IS USED IN THE ROAD SECTION, THE GEOTEXTILE MAY BE OMITTED.

1 SECTION
NOT TO SCALE

C-04-01 THRU' C-04-10

- DRAFT -
NOT FOR
CONSTRUCTION

ETIC ENGINEERING

ARCADIS

NO.	DATE	DESCRIPTION	GM/SPEC	DWN	CHKD	SUPV	APVD BY
1	09/08/14	PRE-FINAL (90%) DESIGN		AJW	BAS	JPB	JEF
0	04/05/13	INTERMEDIATE (60%) DESIGN		AJW	KLD	JPB	JEF

REVISIONS

APPROVED BY: JEF

SO	
SUPV	JPB
DSGN	BAS
DWN	AJW
CHKD	JPB
OK	JEF
DATE	09/08/14
SCALES	1" = 20'

TOPOCK GROUNDWATER REMEDIATION PROJECT

ACCESS ROAD-
TYPICAL ROAD SECTION

GAS TRANSMISSION & DISTRIBUTION
PACIFIC GAS AND ELECTRIC COMPANY
SAN FRANCISCO, CALIFORNIA

MICROFILM
BILL OF MATL
DWG LIST
SUPSDS
SUPSD BY
SHEET NO. of SHEETS
C-04-11
REV 1

N1808

08/27/2014, 13:50, G:\Graphics\ARI\TOPOCK-01\Post 90%\C-04-01 to 11_C-05-08 to 13AccessRoad.dwg, Tab: C-04-11

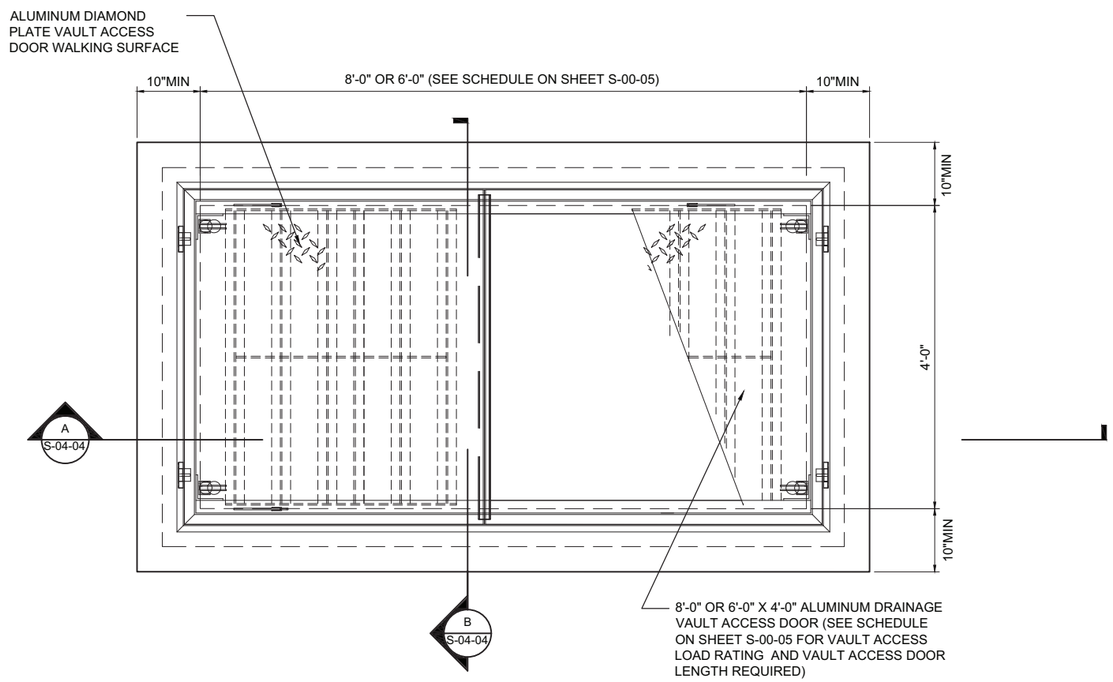

WELL METER VAULT

IRZ EXTRACTION WELL VAULT TYPE 1 - PLAN

1" = 1'-0"

NOTES:

1. PRECAST CONCRETE VAULT COMPONENTS SHALL BE DESIGNED WITH LOADING IN ACCORDANCE WITH AASHTO HS20-44.
2. CONCRETE SHALL BE 5,000 P.S.I. COMPRESSIVE STRENGTH @ 28 DAYS. REINFORCING STEEL SHALL BE ASTM A-615.
3. ALL PIPING AND CONDUIT SHALL BE SECURED TO THE WALLS OR BASE SLAB OF THE CONCRETE VAULTS WITH ANCHOR BOLTS, UNISTRUT, OR CONCRETE PIPE SUPPORTS. CONTRACTOR SHALL INSTALL SUPPORTS WHEREVER NECESSARY TO PROPERLY SUPPORT PIPING AND CONDUIT PER SPECIFICATION 40 05 15.
4. CONTRACTOR RESPONSIBLE FOR LOCATING AND VERIFYING LOCATION OF ALL UTILITIES LOCATED WITHIN AREAS TO BE AFFECTED BY CONSTRUCTION.
5. ALL PIPE PENETRATIONS SHALL BE LINK SEALED IN ACCORDANCE WITH SPECIFICATIONS.
6. SEE MECHANICAL DRAWINGS FOR ALL PIPE PENETRATIONS.

0 1' 2' 3'

SCALE: 1"=1'-0"

- DRAFT -
NOT FOR
CONSTRUCTION

ARCADIS

NO.	DATE	DESCRIPTION	GM/SPEC	DWN	CHKD	SUPV	APVD BY
1	09/08/14	PRE-FINAL (90%) DESIGN	GWE	MSL	JPB	JEF	
0	04/05/13	INTERMEDIATE (60%) DESIGN	GWE	MSL	JPB	JEF	

REVISIONS

APPROVED BY: JEF

SO
SUPV JPB
DSGN MSL
DWN GWE
CHKD JPB
OK JEF
DATE 09/08/14
SCALES AS SHOWN

TOPOCK GROUNDWATER REMEDIATION PROJECT

IRZ EXTRACTION WELL VAULTS - TYPE 1 - PLAN

GAS TRANSMISSION & DISTRIBUTION
PACIFIC GAS AND ELECTRIC COMPANY
SAN FRANCISCO, CALIFORNIA

MICROFILM
BILL OF MATL
DWG LIST
SUPSDS
SUPSD BY
SHEET NO. of SHEETS
S-04-01
REV 1

N1808

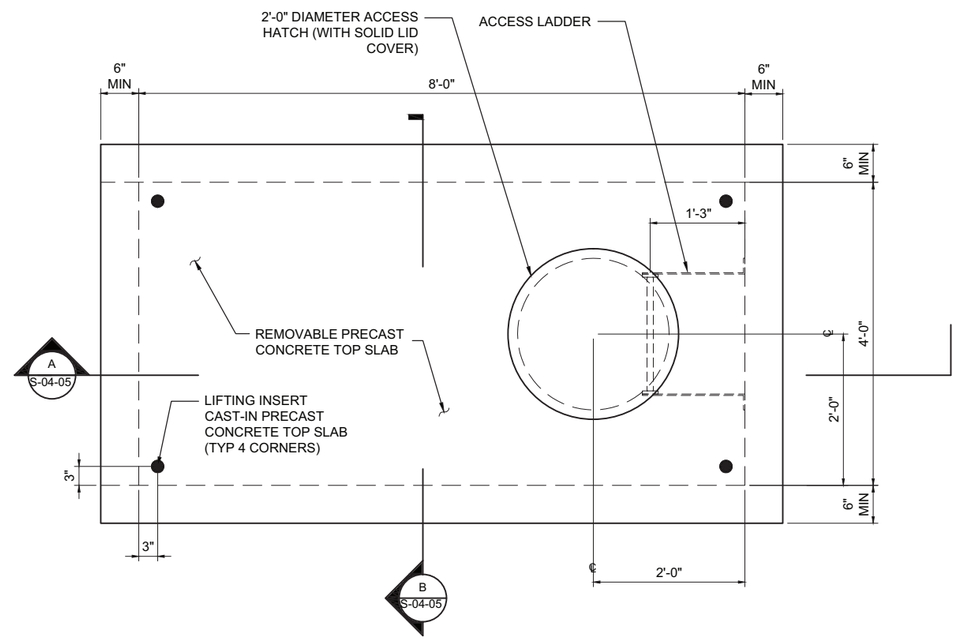

IRZ EXTRACTION WELL VAULT TYPE 2 - PLAN

1"=1'-0"

NOTES:

1. PRECAST CONCRETE VAULT COMPONENTS SHALL BE DESIGNED WITH LOADING IN ACCORDANCE WITH AASHTO HS20-44.
2. CONCRETE SHALL BE 5,000 P.S.I. COMPRESSIVE STRENGTH @ 28 DAYS. REINFORCING STEEL SHALL BE ASTM A-615.
3. ALL PIPING AND CONDUIT SHALL BE SECURED TO THE WALLS OR BASE SLAB OF THE CONCRETE VAULTS WITH ANCHOR BOLTS, UNISTRUT, OR CONCRETE PIPE SUPPORTS. CONTRACTOR SHALL INSTALL SUPPORTS WHEREVER NECESSARY TO PROPERLY SUPPORT PIPING AND CONDUIT PER SPECIFICATION 40 05 15.
4. CONTRACTOR RESPONSIBLE FOR LOCATING AND VERIFYING LOCATION OF ALL UTILITIES LOCATED WITHIN AREAS TO BE AFFECTED BY CONSTRUCTION.
5. ALL PIPE PENETRATIONS SHALL BE LINK SEALED IN ACCORDANCE WITH SPECIFICATIONS.
6. SEE MECHANICAL DRAWINGS FOR ALL PIPE PENETRATIONS.
7. ACCESS HATCH, SOLID LID, AND FRAME TO BE HIGHWAY RATED (HS20-44) AND MANUFACTURED BY NEENAH FOUNDRY OR EAST JORDAN IRON WORKS.
8. PROVIDE 90° HOOK AT ENDS OF TOP AND BOTTOM RESTEEL IN WELL METER VAULT TOP SLAB WITHIN 1'-0" OF LIFTING INSERTS.

0 1' 2' 3'

SCALE: 1"=1'-0"

- DRAFT -
NOT FOR
CONSTRUCTION

ARCADIS

NO.	DATE	DESCRIPTION	GM/SPEC	DWN	CHKD	SUPV	APVD BY
1	09/08/14	PRE-FINAL (90%) DESIGN	GWE	MSL	JPB	JEF	
0	04/05/13	INTERMEDIATE (60%) DESIGN	GWE	MSL	JPB	JEF	

REVISIONS

APPROVED BY: JEF

SO	
SUPV	JPB
DSGN	MSL
DWN	GWE
CHKD	JPB
OK	JEF
DATE	09/08/14
SCALES	AS SHOWN

TOPOCK GROUNDWATER REMEDIATION PROJECT

IRZ EXTRACTION WELL VAULTS - TYPE 2 - PLAN

GAS TRANSMISSION & DISTRIBUTION

PACIFIC GAS AND ELECTRIC COMPANY
SAN FRANCISCO, CALIFORNIA

MICROFILM
BILL OF MATL
DWG LIST
SUPSDS
SUPSD BY
SHEET NO. of SHEETS

S-04-02 REV 1

N1808

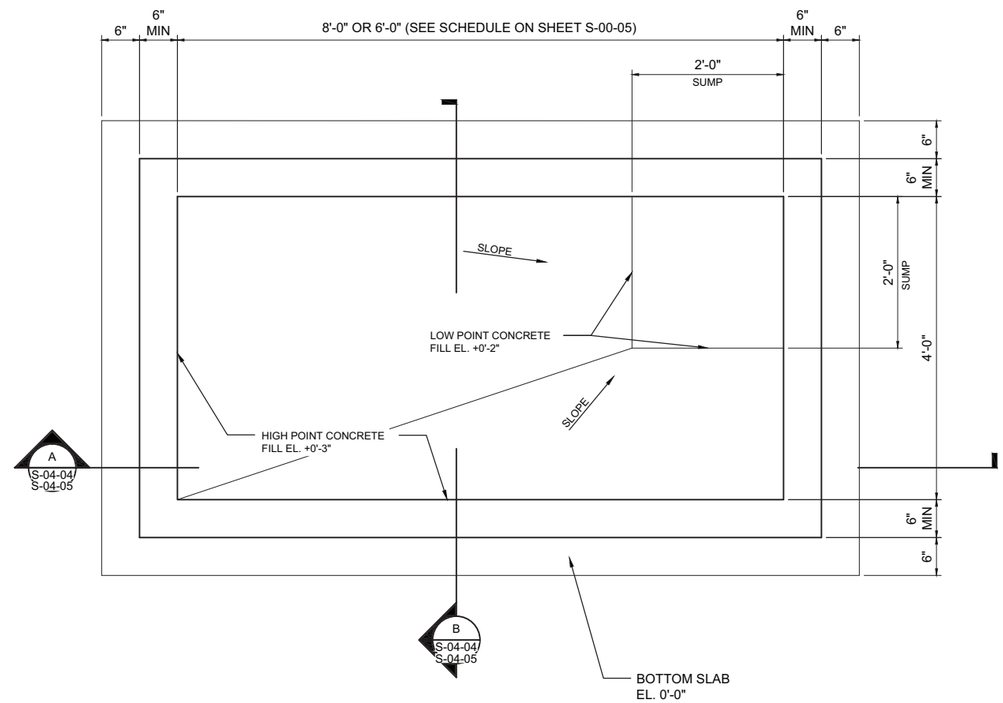

IRZ EXTRACTION WELL VAULT - FOUNDATION PLAN

1"=1'-0"

NOTES:

1. PRECAST CONCRETE VAULT COMPONENTS SHALL BE DESIGNED WITH LOADING IN ACCORDANCE WITH AASHTO HS20-44.
2. CONCRETE SHALL BE 5,000 P.S.I. COMPRESSIVE STRENGTH @ 28 DAYS. REINFORCING STEEL SHALL BE ASTM A-615.
3. ALL PIPING AND CONDUIT SHALL BE SECURED TO THE WALLS OR BASE SLAB OF THE CONCRETE VAULTS WITH ANCHOR BOLTS, UNISTRUT, OR CONCRETE PIPE SUPPORTS. CONTRACTOR SHALL INSTALL SUPPORTS WHEREVER NECESSARY TO PROPERLY SUPPORT PIPING AND CONDUIT PER SPECIFICATION 40 05 15.
4. CONTRACTOR RESPONSIBLE FOR LOCATING AND VERIFYING LOCATION OF ALL UTILITIES LOCATED WITHIN AREAS TO BE AFFECTED BY CONSTRUCTION.
5. ALL PIPE PENETRATIONS SHALL BE LINK SEALED IN ACCORDANCE WITH SPECIFICATIONS.
6. SEE MECHANICAL DRAWINGS FOR ALL PIPE PENETRATIONS.

0 1' 2' 3'

SCALE: 1"=1'-0"

- DRAFT -
NOT FOR
CONSTRUCTION

ARCADIS

NO.	DATE	DESCRIPTION	GM/SPEC	DWN	CHKD	SUPV	APVD BY
1	09/08/14	PRE-FINAL (90%) DESIGN		GWE	MSL	JPB	JEF
0	04/05/13	INTERMEDIATE (60%) DESIGN		GWE	MSL	JPB	JEF

REVISIONS

APPROVED BY: JEF

SO
SUPV JPB
DSGN MSL
DWN GWE
CHKD JPB
OK JEF
DATE 09/08/14
SCALES AS SHOWN

TOPOCK GROUNDWATER REMEDIATION PROJECT

IRZ EXTRACTION WELL VAULTS - FOUNDATION PLAN

GAS TRANSMISSION & DISTRIBUTION
PACIFIC GAS AND ELECTRIC COMPANY
SAN FRANCISCO, CALIFORNIA

MICROFILM
BILL OF MATL
DWG LIST
SUPSDS
SUPSD BY
SHEET NO. of SHEETS

S-04-03 REV 1

N1B06

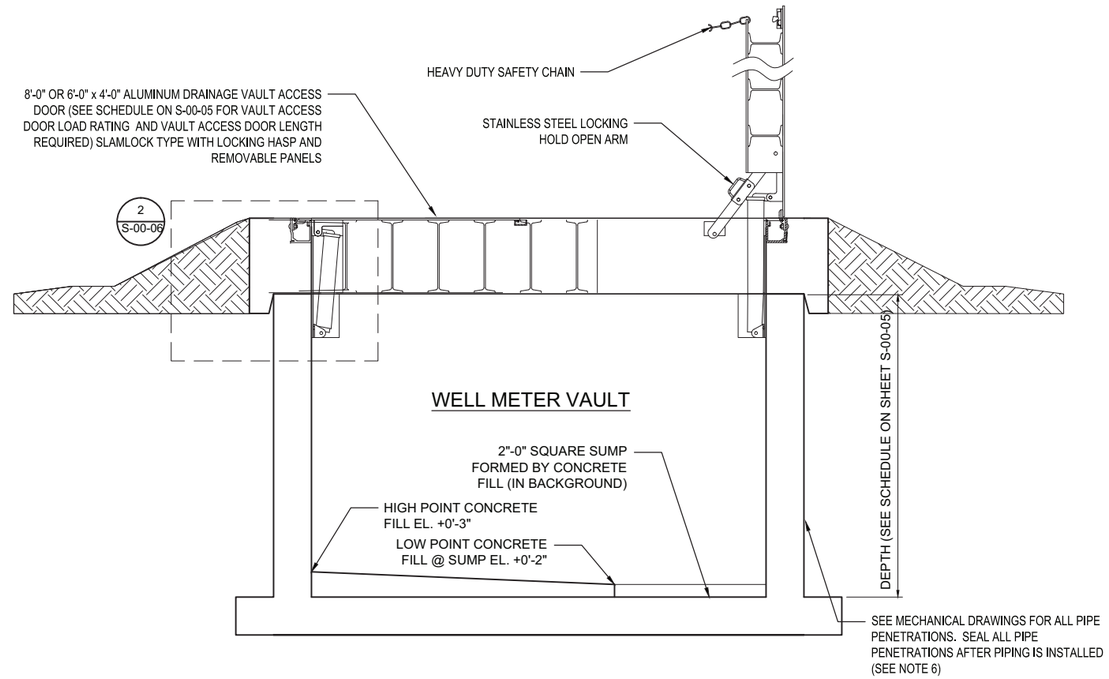

A IRZ EXTRACTION WELL VAULT TYPE 1 - SECTION

1" = 1'-0"

S-04-01, S-04-03

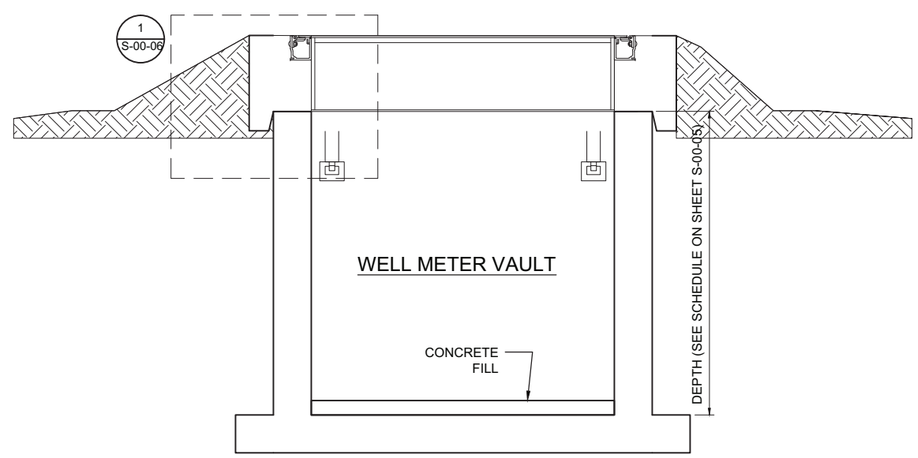

B IRZ EXTRACTION WELL VAULT TYPE 1 - SECTION

1" = 1'-0"

S-04-01, S-04-03

NOTES:

1. PRECAST CONCRETE VAULT COMPONENTS SHALL BE DESIGNED WITH LOADING IN ACCORDANCE WITH AASHTO HS20-44.
2. CONCRETE SHALL BE 5,000 P.S.I. COMPRESSIVE STRENGTH @ 28 DAYS. REINFORCING STEEL SHALL BE ASTM A-615.
3. ALL PIPING AND CONDUIT SHALL BE SECURED TO THE WALLS OR BASE SLAB OF THE CONCRETE VAULTS WITH ANCHOR BOLTS, UNISTRUT, OR CONCRETE PIPE SUPPORTS. CONTRACTOR SHALL INSTALL SUPPORTS WHEREVER NECESSARY TO PROPERLY SUPPORT PIPING AND CONDUIT PER SPECIFICATION 40 05 15.
4. CONTRACTOR RESPONSIBLE FOR LOCATING AND VERIFYING LOCATION OF ALL UTILITIES LOCATED WITHIN AREAS TO BE AFFECTED BY CONSTRUCTION.
5. ALL PIPE PENETRATIONS SHALL BE LINK SEALED IN ACCORDANCE WITH SPECIFICATIONS.
6. SEE MECHANICAL DRAWINGS FOR ALL PIPE PENETRATIONS.

0 1' 2' 3'

SCALE: 1"=1'-0"

- DRAFT -
NOT FOR CONSTRUCTION

ARCADIS

NO.	DATE	DESCRIPTION	GM/SPEC	DWN	CHKD	SUPV	APVD BY
1	09/08/14	PRE-FINAL (90%) DESIGN		GWE	MSL	JPB	JEF
0	04/05/13	INTERMEDIATE (60%) DESIGN		GWE	MSL	JPB	JEF

REVISIONS

APPROVED BY: JEF

SO	
SUPV	JPB
DSGN	MSL
DWN	GWE
CHKD	JPB
OK	JEF
DATE	09/08/14
SCALES	AS SHOWN

TOPOCK GROUNDWATER REMEDIATION PROJECT

IRZ EXTRACTION WELL VAULTS - SECTIONS SHEET 1 OF 2

GAS TRANSMISSION & DISTRIBUTION

PACIFIC GAS AND ELECTRIC COMPANY
SAN FRANCISCO, CALIFORNIA

MICROFILM
BILL OF MATL
DWG LIST
SUPSDS
SUPSD BY
SHEET NO. of SHEETS
S-04-04
REV 1

N1808

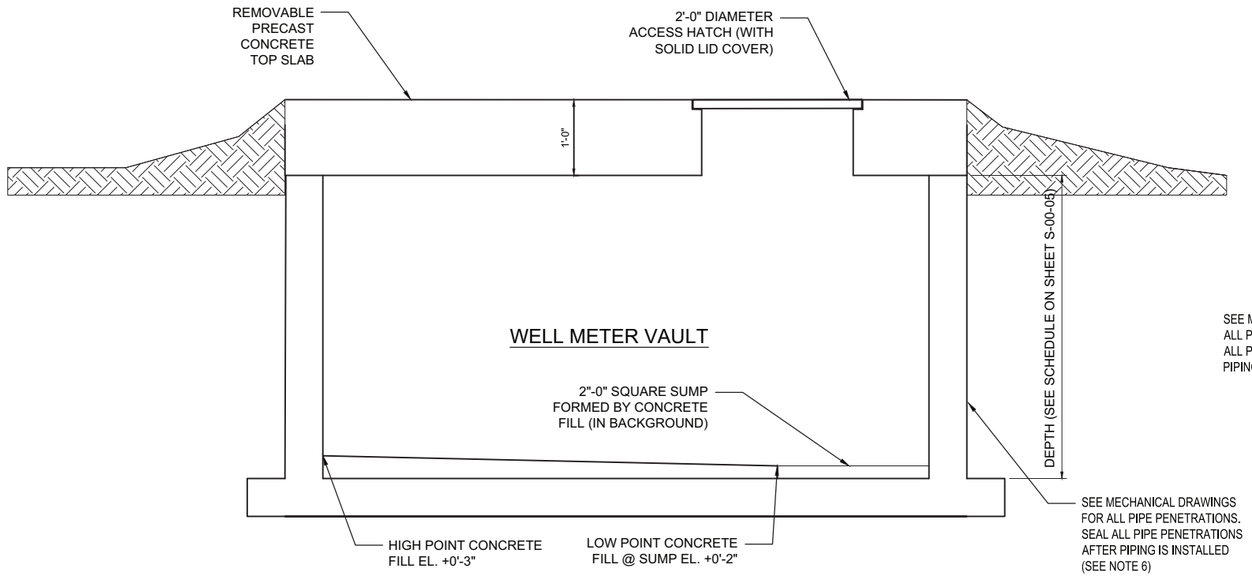

A IRZ EXTRACTION WELL METER VAULT AND WELL VAULT TYPE 2 - SECTION
1" = 1'-0"
S-04-02, S-04-03

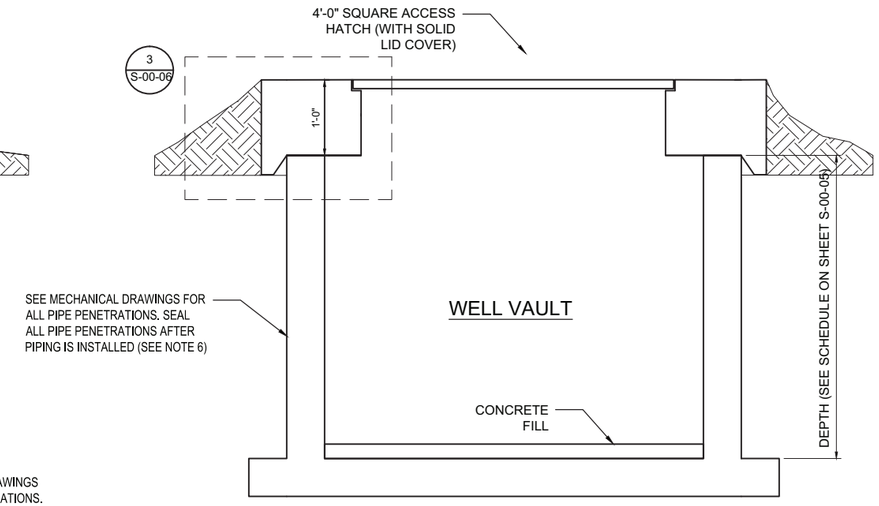

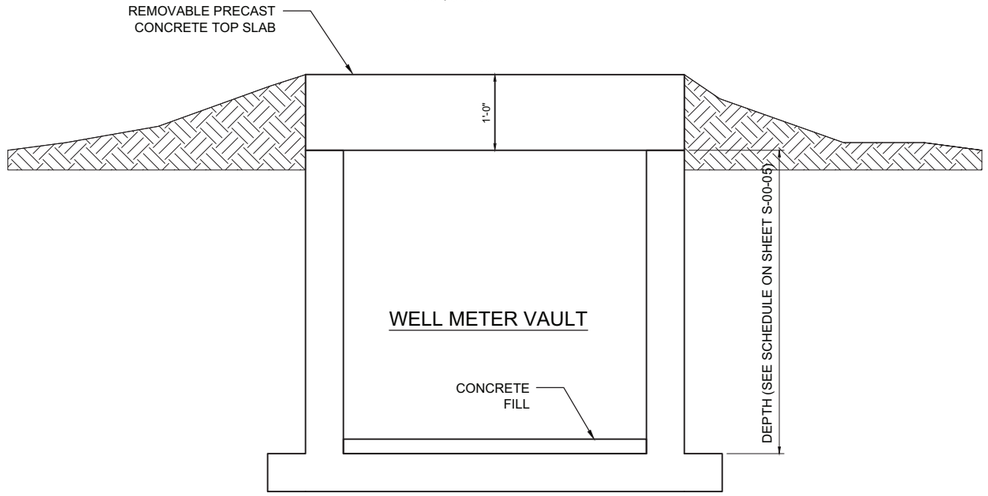

B IRZ EXTRACTION WELL METER VAULT TYPE 2 - SECTION
1" = 1'-0"
S-04-02, S-04-03

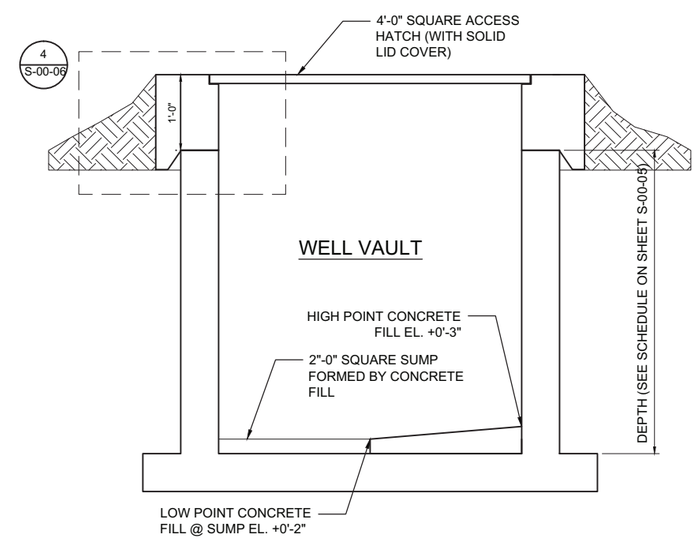

C IRZ EXTRACTION WELL VAULT TYPE 2 - SECTION
1" = 1'-0"
S-04-02, S-04-03

0 1' 2' 3'
SCALE: 1"=1'-0"

NOTES:
1. PRECAST CONCRETE VAULT COMPONENTS SHALL BE DESIGNED WITH LOADING IN ACCORDANCE WITH AASHTO HS20-44.
2. CONCRETE SHALL BE 5,000 P.S.I. COMPRESSIVE STRENGTH @ 28 DAYS. REINFORCING STEEL SHALL BE ASTM A-615.
3. ALL PIPING AND CONDUIT SHALL BE SECURED TO THE WALLS OR BASE SLAB OF THE CONCRETE VAULTS WITH ANCHOR BOLTS, UNISTRUT, OR CONCRETE PIPE SUPPORTS. CONTRACTOR SHALL INSTALL SUPPORTS WHEREVER NECESSARY TO PROPERLY SUPPORT PIPING AND CONDUIT PER SPECIFICATION 40 05 15.
4. CONTRACTOR RESPONSIBLE FOR LOCATING AND VERIFYING LOCATION OF ALL UTILITIES LOCATED WITHIN AREAS TO BE AFFECTED BY CONSTRUCTION.
5. ALL PIPE PENETRATIONS SHALL BE LINK SEALED IN ACCORDANCE WITH SPECIFICATIONS.
6. SEE MECHANICAL DRAWINGS FOR ALL PIPE PENETRATIONS.

- DRAFT -
NOT FOR CONSTRUCTION

ARCADIS

NO.	DATE	DESCRIPTION	GM/SPEC	DWN	CHKD	SUPV	APVD BY
1	09/08/14	PRE-FINAL (90%) DESIGN		GWE	MSL	JPB	JEF
0	04/05/13	INTERMEDIATE (60%) DESIGN		GWE	MSL	JPB	JEF

REVISIONS

APPROVED BY: JEF

SO	
SUPV	JPB
DSGN	MSL
DWN	GWE
CHKD	JPB
OK	JEF
DATE	09/08/14
SCALES	AS SHOWN

TOPOCK GROUNDWATER REMEDIATION PROJECT
IRZ EXTRACTION WELL VAULTS - SECTIONS
SHEET 2 OF 2
GAS TRANSMISSION & DISTRIBUTION
PACIFIC GAS AND ELECTRIC COMPANY
SAN FRANCISCO, CALIFORNIA

MICROFILM
BILL OF MATL
DWG LIST
SUPSDS
SUPSD BY
SHEET NO. of SHEETS
S-04-05
REV 1

N1808

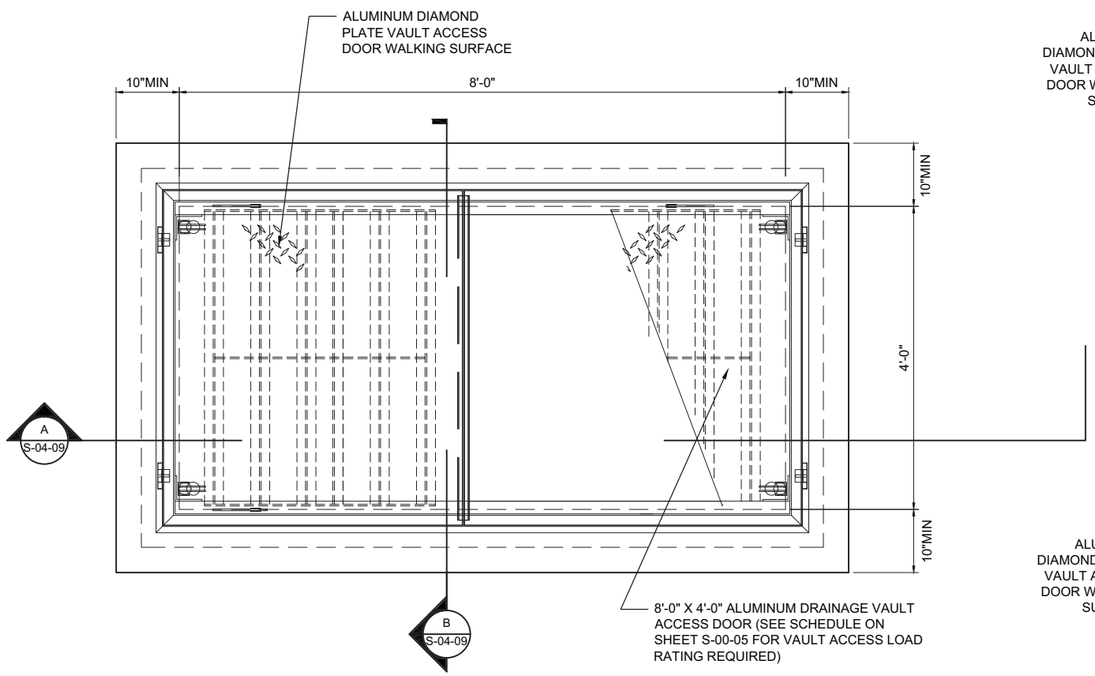

WELL METER VAULT

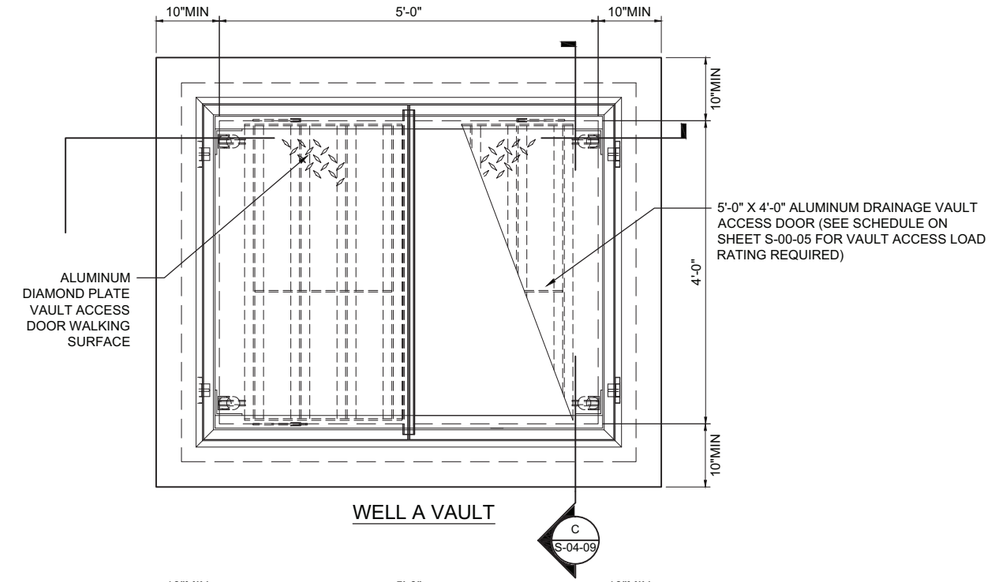

WELL A VAULT

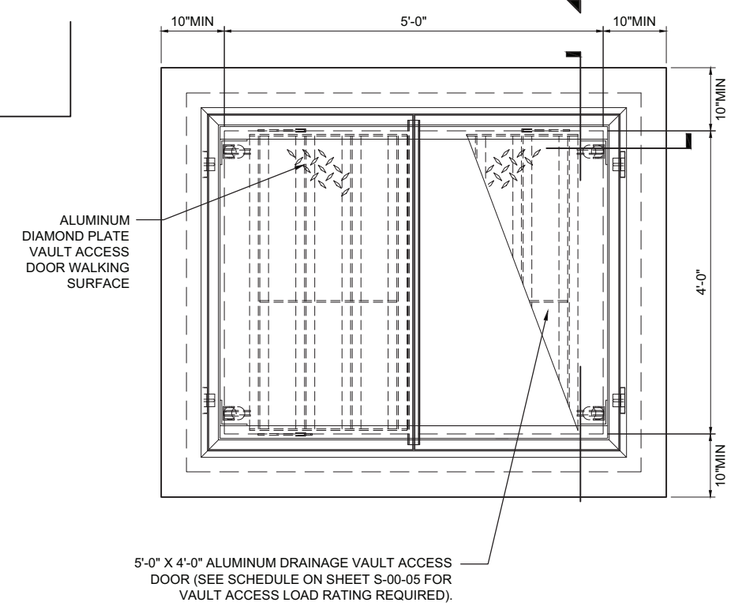

WELL B VAULT

NOTES:

1. PRECAST CONCRETE VAULT COMPONENTS SHALL BE DESIGNED WITH LOADING IN ACCORDANCE WITH AASHTO HS20-44.
2. CONCRETE SHALL BE 5,000 P.S.I. COMPRESSIVE STRENGTH @ 28 DAYS. REINFORCING STEEL SHALL BE ASTM A-615.
3. ALL PIPING AND CONDUIT SHALL BE SECURED TO THE WALLS OR BASE SLAB OF THE CONCRETE VAULTS WITH ANCHOR BOLTS, UNISTRUT, OR CONCRETE PIPE SUPPORTS. CONTRACTOR SHALL INSTALL SUPPORTS WHEREVER NECESSARY TO PROPERLY SUPPORT PIPING AND CONDUIT PER SPECIFICATION 40 05 15.
4. CONTRACTOR RESPONSIBLE FOR LOCATING AND VERIFYING LOCATION OF ALL UTILITIES LOCATED WITHIN AREAS TO BE AFFECTED BY CONSTRUCTION.
5. ALL PIPE PENETRATIONS SHALL BE LINK SEALED IN ACCORDANCE WITH SPECIFICATIONS.
6. SEE MECHANICAL DRAWINGS FOR ALL PIPE PENETRATIONS.

IRZ INJECTION WELL METER VAULT AND WELL VAULT TYPE 1 - PLAN

1" = 1'-0"

0 1' 2' 3'

SCALE: 1"=1'-0"

- DRAFT -
NOT FOR
CONSTRUCTION

ARCADIS

NO.	DATE	DESCRIPTION	GM/SPEC	DWN	CHKD	SUPV	APVD BY
1	09/08/14	PRE-FINAL (90%) DESIGN		GWE	MSL	JPB	JEF
0	04/05/13	INTERMEDIATE (60%) DESIGN		GWE	MSL	JPB	JEF

REVISIONS

APPROVED BY: JEF

SO
SUPV JPB
DSGN MSL
DWN GWE
CHKD JPB
OK JEF
DATE 09/08/14
SCALES AS SHOWN

TOPOCK GROUNDWATER REMEDIATION PROJECT

IRZ INJECTION WELL VAULTS - TYPE 1 - PLAN

GAS TRANSMISSION & DISTRIBUTION
PACIFIC GAS AND ELECTRIC COMPANY
SAN FRANCISCO, CALIFORNIA

MICROFILM
BILL OF MATL
DWG LIST
SUPSDS
SUPSD BY
SHEET NO. of SHEETS
S-04-06
REV 1

N1808

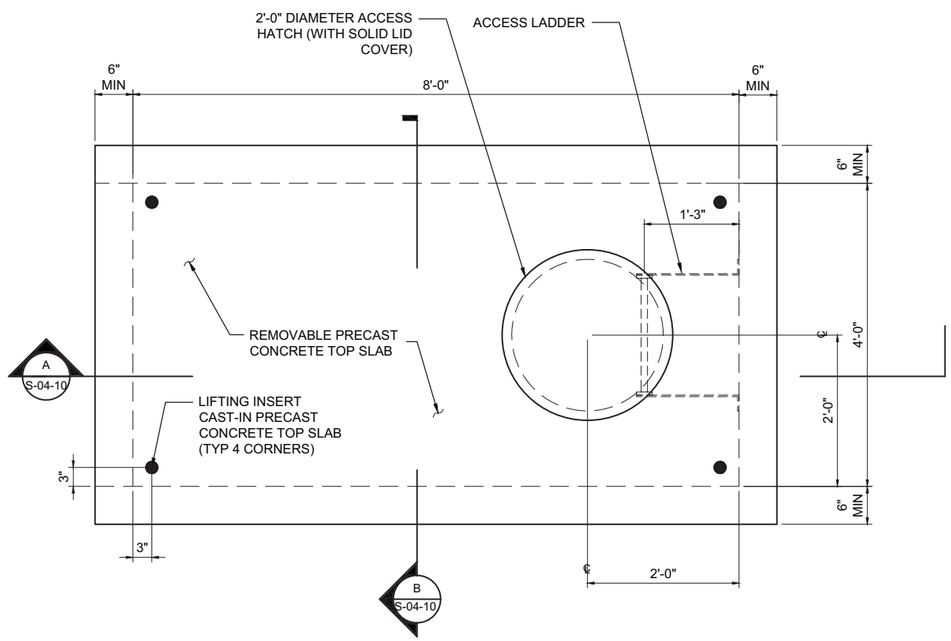

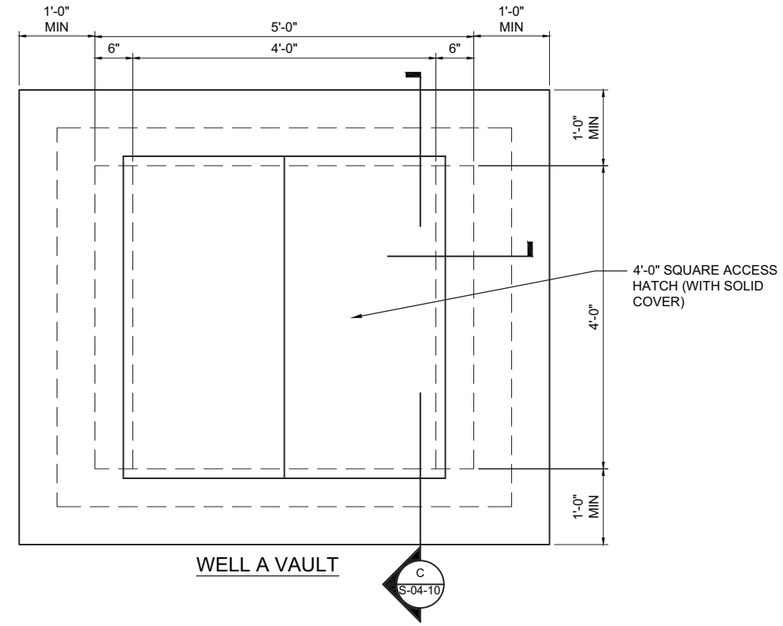

WELL A VAULT

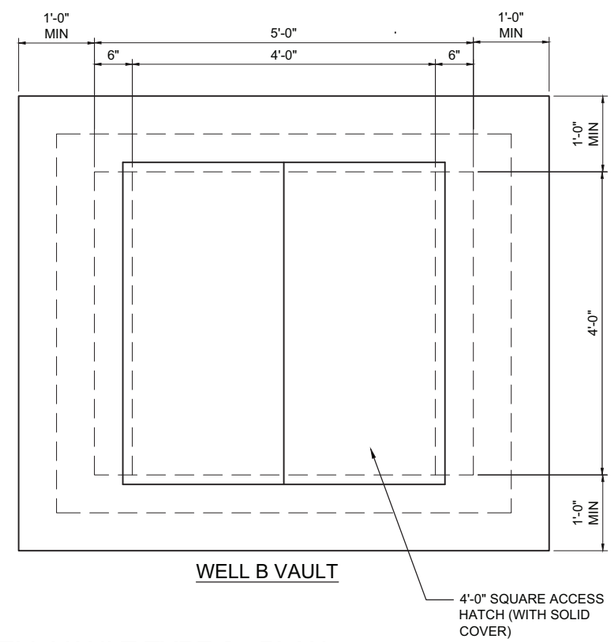

WELL B VAULT

NOTES:

1. PRECAST CONCRETE VAULT COMPONENTS SHALL BE DESIGNED WITH LOADING IN ACCORDANCE WITH AASHTO HS20-44.
2. CONCRETE SHALL BE 5,000 P.S.I. COMPRESSIVE STRENGTH @ 28 DAYS. REINFORCING STEEL SHALL BE ASTM A-615.
3. ALL PIPING AND CONDUIT SHALL BE SECURED TO THE WALLS OR BASE SLAB OF THE CONCRETE VAULTS WITH ANCHOR BOLTS, UNISTRUT, OR CONCRETE PIPE SUPPORTS. CONTRACTOR SHALL INSTALL SUPPORTS WHEREVER NECESSARY TO PROPERLY SUPPORT PIPING AND CONDUIT PER SPECIFICATION 40 05 15.
4. CONTRACTOR RESPONSIBLE FOR LOCATING AND VERIFYING LOCATION OF ALL UTILITIES LOCATED WITHIN AREAS TO BE AFFECTED BY CONSTRUCTION.
5. ALL PIPE PENETRATIONS SHALL BE LINK SEALED IN ACCORDANCE WITH SPECIFICATIONS.
6. SEE MECHANICAL DRAWINGS FOR ALL PIPE PENETRATIONS.
7. ACCESS HATCH, SOLID LID, AND FRAME TO BE HIGHWAY RATED (HS20-44) AND MANUFACTURED BY NEENAH FOUNDRY OR EAST JORDAN IRON WORKS.
8. PROVIDE 90° HOOK AT ENDS OF TOP AND BOTTOM RESTEEL IN WELL METER VAULT TOP SLAB WITHIN 1'-0" OF LIFTING INSERTS.

IRZ INJECTION WELL METER VAULT AND WELL VAULT TYPE 2 - PLAN

1"=1'-0"

0 1' 2' 3'

SCALE: 1"=1'-0"

- DRAFT -
NOT FOR CONSTRUCTION

ARCADIS

NO.	DATE	DESCRIPTION	GM/SPEC	DWN	CHKD	SUPV	APVD BY
1	09/08/14	PRE-FINAL (90%) DESIGN	GWE	MSL	JPB	JEF	
0	04/05/13	INTERMEDIATE (60%) DESIGN	GWE	MSL	JPB	JEF	

REVISIONS

APPROVED BY: JEF

SO	
SUPV	JPB
DSGN	MSL
DWN	GWE
CHKD	JPB
OK	JEF
DATE	09/08/14
SCALES	AS SHOWN

TOPOCK GROUNDWATER REMEDIATION PROJECT

IRZ INJECTION WELL VAULTS - TYPE 2 - PLAN

GAS TRANSMISSION & DISTRIBUTION

PACIFIC GAS AND ELECTRIC COMPANY
SAN FRANCISCO, CALIFORNIA

MICROFILM	
BILL OF MATL	
DWG LIST	
SUPSDS	
SUPSD BY	
SHEET NO. of SHEETS	
S-04-07	REV 1

N1808

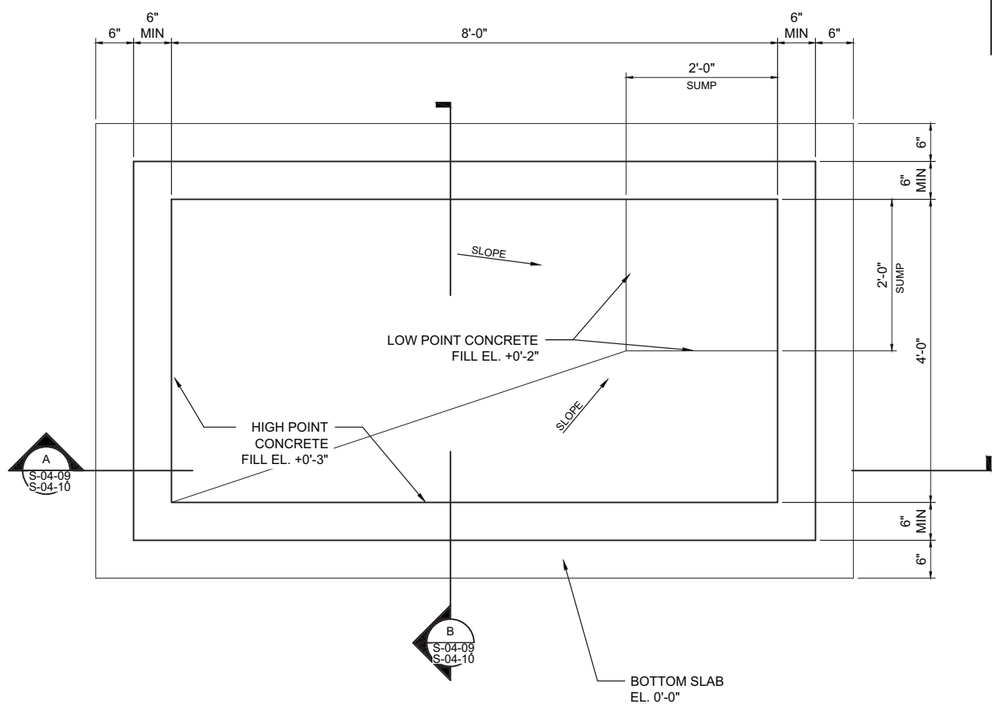

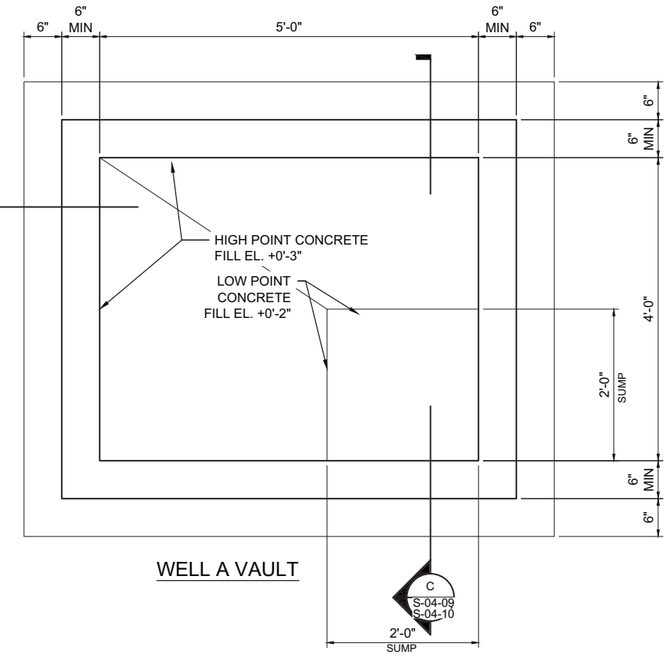

WELL A VAULT

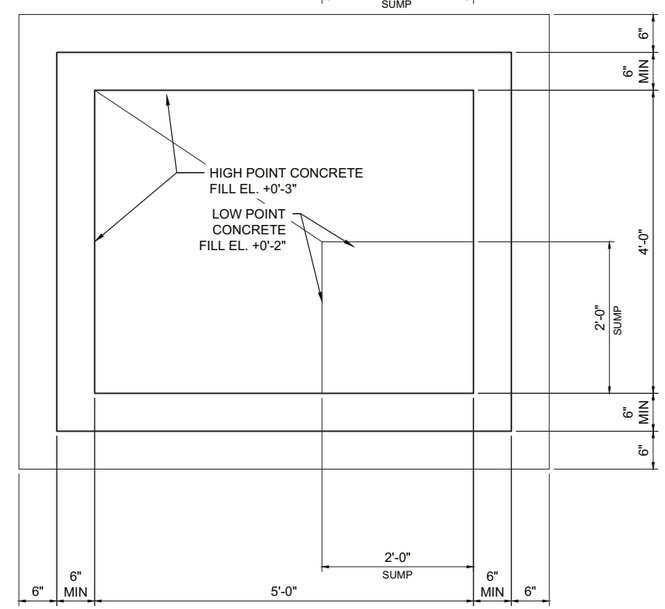

WELL B VAULT

NOTES:

1. PRECAST CONCRETE VAULT COMPONENTS SHALL BE DESIGNED WITH LOADING IN ACCORDANCE WITH AASHTO HS20-44.
2. CONCRETE SHALL BE 5,000 P.S.I. COMPRESSIVE STRENGTH @ 28 DAYS. REINFORCING STEEL SHALL BE ASTM A-615.
3. ALL PIPING AND CONDUIT SHALL BE SECURED TO THE WALLS OR BASE SLAB OF THE CONCRETE VAULTS WITH ANCHOR BOLTS, UNISTRUT, OR CONCRETE PIPE SUPPORTS. CONTRACTOR SHALL INSTALL SUPPORTS WHEREVER NECESSARY TO PROPERLY SUPPORT PIPING AND CONDUIT PER SPECIFICATION 40 05 15.
4. CONTRACTOR RESPONSIBLE FOR LOCATING AND VERIFYING LOCATION OF ALL UTILITIES LOCATED WITHIN AREAS TO BE AFFECTED BY CONSTRUCTION.
5. ALL PIPE PENETRATIONS SHALL BE LINK SEALED IN ACCORDANCE WITH SPECIFICATIONS.
6. SEE MECHANICAL DRAWINGS FOR ALL PIPE PENETRATIONS.

0 1' 2' 3'
SCALE: 1"=1'-0"

IRZ INJECTION WELL METER VAULT AND WELL VAULTS - FOUNDATION PLAN

1"=1'-0"

- DRAFT -
NOT FOR
CONSTRUCTION

ARCADIS

NO.	DATE	DESCRIPTION	GM/SPEC	DWN	CHKD	SUPV	APVD BY
1	09/08/14	PRE-FINAL (90%) DESIGN	GWE	MSL	JPB	JEF	
0	04/05/13	INTERMEDIATE (60%) DESIGN	GWE	MSL	JPB	JEF	

REVISIONS

APPROVED BY: JEF

SO	
SUPV	JPB
DSGN	MSL
DWN	GWE
CHKD	JPB
OK	JEF
DATE	09/08/14
SCALES	AS SHOWN

TOPOCK GROUNDWATER REMEDIATION PROJECT

IRZ INJECTION WELL
VAULTS - FOUNDATION PLAN

GAS TRANSMISSION & DISTRIBUTION
PACIFIC GAS AND ELECTRIC COMPANY
SAN FRANCISCO, CALIFORNIA

MICROFILM
BILL OF MATL
DWG LIST
SUPSDS
SUPSD BY
SHEET NO. of SHEETS
S-04-08
REV 1

N1808

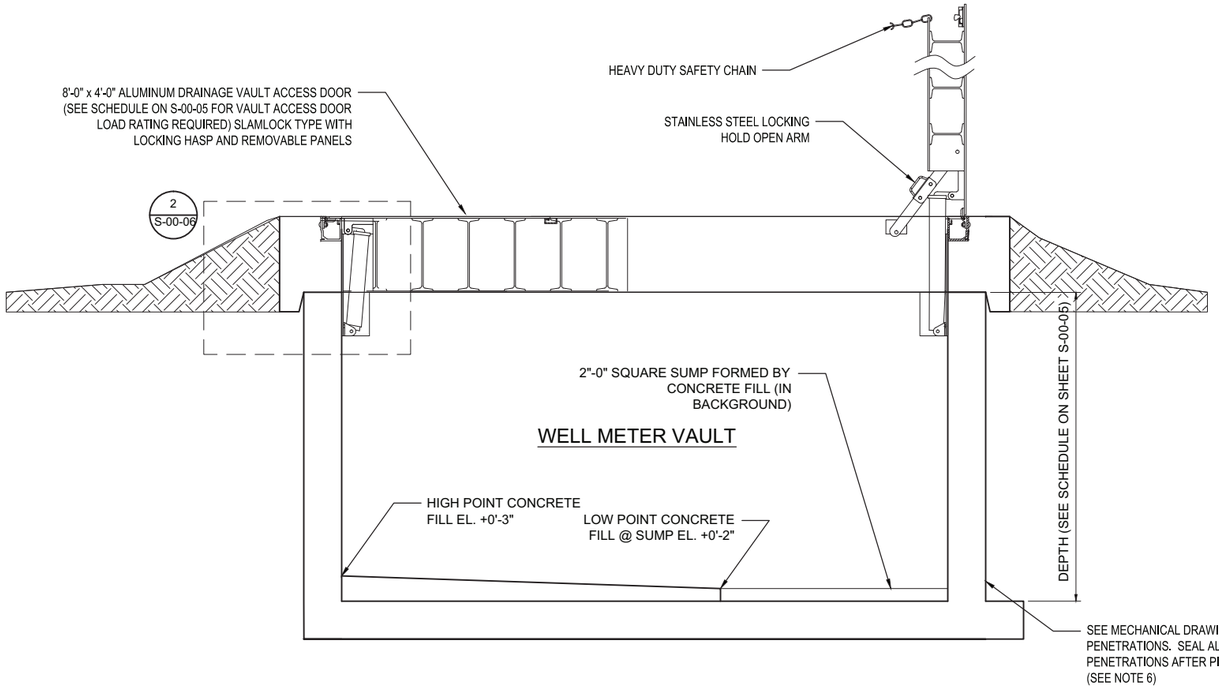

A IRZ INJECTION WELL METER VAULT AND WELL VAULT TYPE 1 - SECTION
1" = 1'-0"
S-04-06, S-04-08

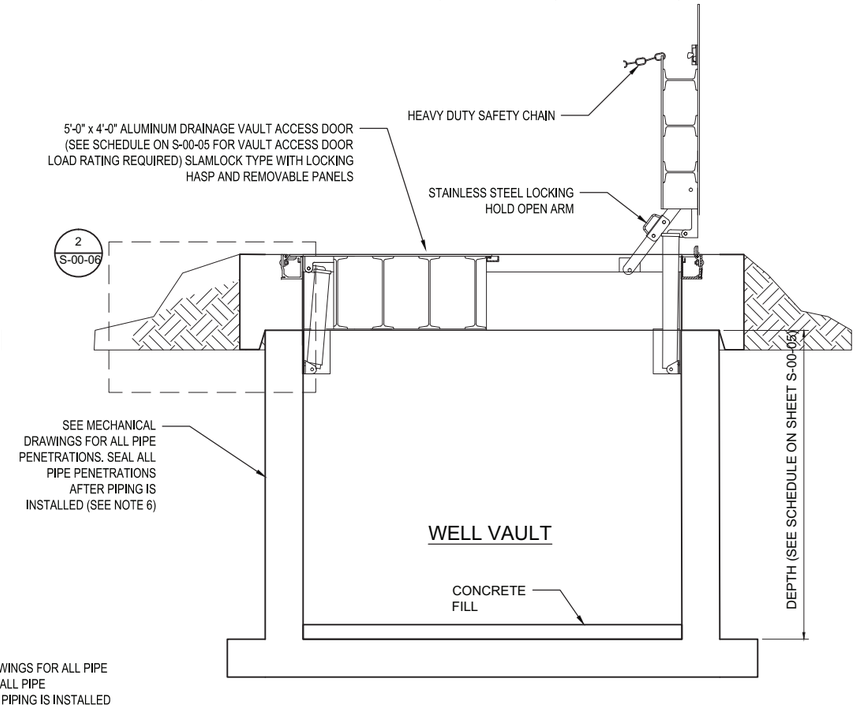

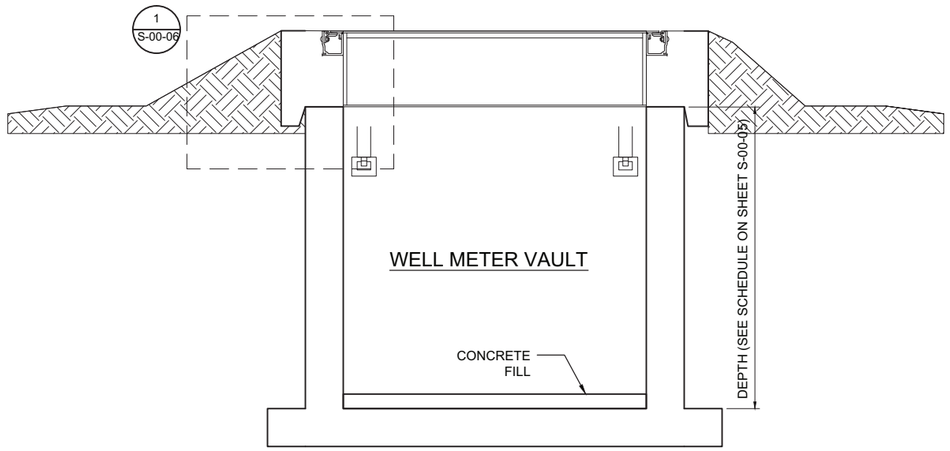

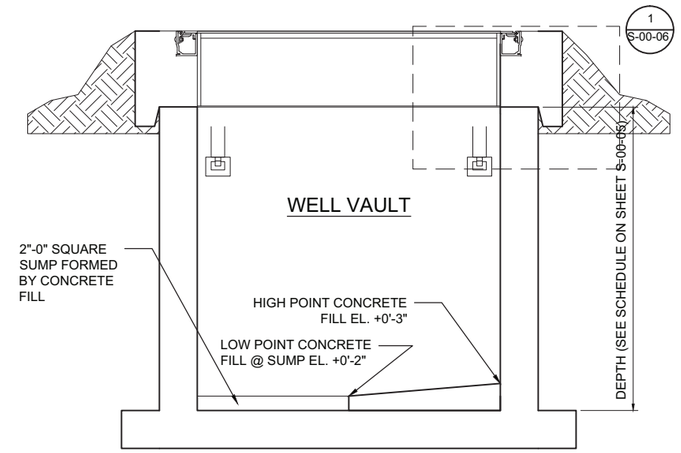

NOTES:
1. PRECAST CONCRETE VAULT COMPONENTS SHALL BE DESIGNED WITH LOADING IN ACCORDANCE WITH AASHTO HS20-44.
2. CONCRETE SHALL BE 5,000 P.S.I. COMPRESSIVE STRENGTH @ 28 DAYS. REINFORCING STEEL SHALL BE ASTM A-615.
3. ALL PIPING AND CONDUIT SHALL BE SECURED TO THE WALLS OR BASE SLAB OF THE CONCRETE VAULTS WITH ANCHOR BOLTS, UNISTRUT, OR CONCRETE PIPE SUPPORTS. CONTRACTOR SHALL INSTALL SUPPORTS WHEREVER NECESSARY TO PROPERLY SUPPORT PIPING AND CONDUIT PER SPECIFICATION 40 05 15.
4. CONTRACTOR RESPONSIBLE FOR LOCATING AND VERIFYING LOCATION OF ALL UTILITIES LOCATED WITHIN AREAS TO BE AFFECTED BY CONSTRUCTION.
5. ALL PIPE PENETRATIONS SHALL BE LINK SEALED IN ACCORDANCE WITH SPECIFICATIONS.
6. SEE MECHANICAL DRAWINGS FOR ALL PIPE PENETRATIONS.

0 1' 2' 3'
SCALE: 1"=1'-0"

B IRZ INJECTION WELL METER VAULT TYPE 1 - SECTION
1" = 1'-0"
S-04-06, S-04-08

C IRZ INJECTION WELL VAULT TYPE 1 - SECTION
1" = 1'-0"
S-04-06, S-04-08

- DRAFT -
NOT FOR CONSTRUCTION

ARCADIS

NO.	DATE	DESCRIPTION	GM/SPEC	DWN	CHKD	SUPV	APVD BY
1	09/08/14	PRE-FINAL (90%) DESIGN	GWE	MSL	JPB	JEF	
0	04/05/13	INTERMEDIATE (60%) DESIGN	GWE	MSL	JPB	JEF	

REVISIONS

APPROVED BY: JEF

SO	
SUPV	JPB
DSGN	MSL
DWN	GWE
CHKD	JPB
OK	JEF
DATE	09/08/14
SCALES	AS SHOWN

TOPOCK GROUNDWATER REMEDIATION PROJECT
IRZ INJECTION WELL VAULTS - SECTIONS SHEET 1 OF 2
GAS TRANSMISSION & DISTRIBUTION
PACIFIC GAS AND ELECTRIC COMPANY
SAN FRANCISCO, CALIFORNIA

MICROFILM
BILL OF MATL
DWG LIST
SUPSDS
SUPSD BY
SHEET NO. of SHEETS
S-04-09
REV 1

N1808

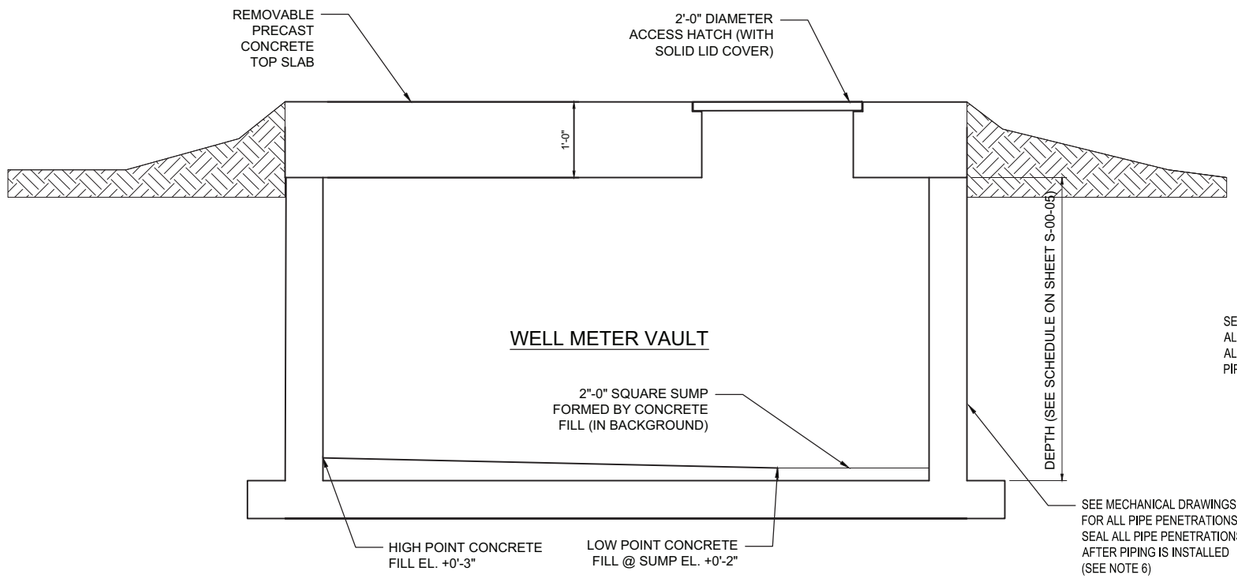

A IRZ INJECTION WELL METER VAULT AND WELL VAULT TYPE 2 - SECTION
1" = 1'-0"
S-04-07, S-04-08

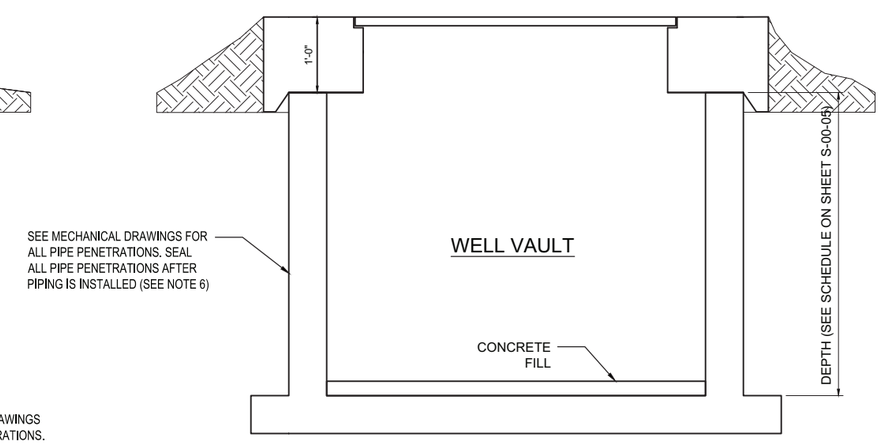

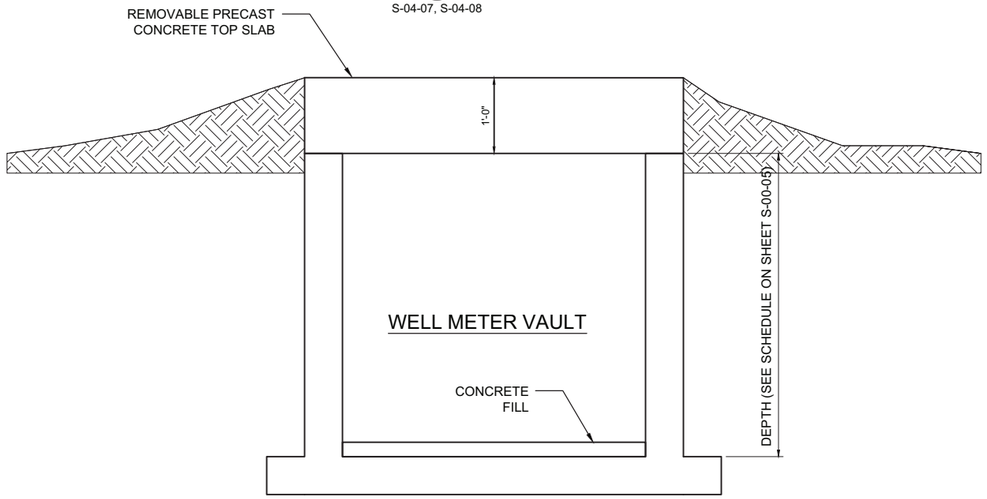

B IRZ INJECTION WELL METER VAULT TYPE 2 - SECTION
1" = 1'-0"
S-04-07, S-04-08

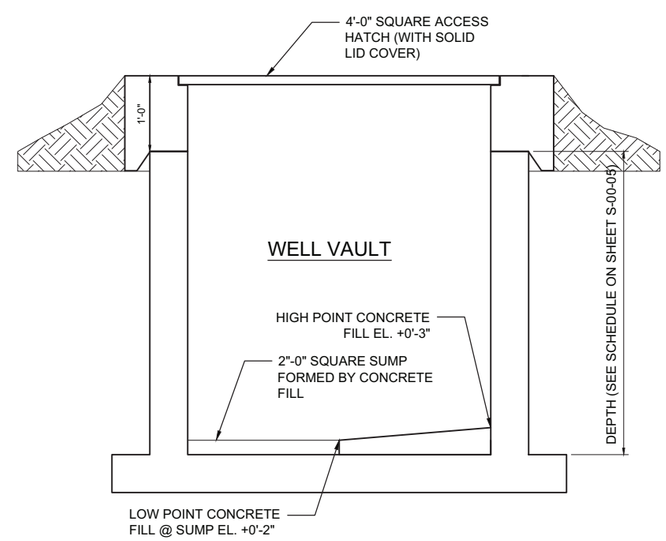

C IRZ INJECTION WELL VAULT TYPE 2 - SECTION
1" = 1'-0"
S-04-07, S-04-08

0 1' 2' 3'
SCALE: 1"=1'-0"

NOTES:
1. PRECAST CONCRETE VAULT COMPONENTS SHALL BE DESIGNED WITH LOADING IN ACCORDANCE WITH AASHTO HS20-44.
2. CONCRETE SHALL BE 5,000 P.S.I. COMPRESSIVE STRENGTH @ 28 DAYS. REINFORCING STEEL SHALL BE ASTM A-615.
3. ALL PIPING AND CONDUIT SHALL BE SECURED TO THE WALLS OR BASE SLAB OF THE CONCRETE VAULTS WITH ANCHOR BOLTS, UNISTRUT, OR CONCRETE PIPE SUPPORTS. CONTRACTOR SHALL INSTALL SUPPORTS WHEREVER NECESSARY TO PROPERLY SUPPORT PIPING AND CONDUIT PER SPECIFICATION 40 05 15.
4. CONTRACTOR RESPONSIBLE FOR LOCATING AND VERIFYING LOCATION OF ALL UTILITIES LOCATED WITHIN AREAS TO BE AFFECTED BY CONSTRUCTION.
5. ALL PIPE PENETRATIONS SHALL BE LINK SEALED IN ACCORDANCE WITH SPECIFICATIONS.
6. SEE MECHANICAL DRAWINGS FOR ALL PIPE PENETRATIONS.

- DRAFT -
NOT FOR CONSTRUCTION

ARCADIS

NO.	DATE	DESCRIPTION	GM/SPEC	DWN	CHKD	SUPV	APVD BY
1	09/08/14	PRE-FINAL (90%) DESIGN	GWE	MSL	JPB	JEF	
0	04/05/13	INTERMEDIATE (60%) DESIGN	GWE	MSL	JPB	JEF	

REVISIONS

APPROVED BY: JEF

SO	
SUPV	JPB
DSGN	MSL
DWN	GWE
CHKD	JPB
OK	JEF
DATE	09/08/14
SCALES	AS SHOWN

TOPOCK GROUNDWATER REMEDIATION PROJECT
IRZ INJECTION WELL VAULTS - SECTIONS
SHEET 2 OF 2
GAS TRANSMISSION & DISTRIBUTION
PACIFIC GAS AND ELECTRIC COMPANY
SAN FRANCISCO, CALIFORNIA

MICROFILM
BILL OF MATL
DWG LIST
SUPSDS
SUPSD BY
SHEET NO. of SHEETS
S-04-10
REV 1

N1B08

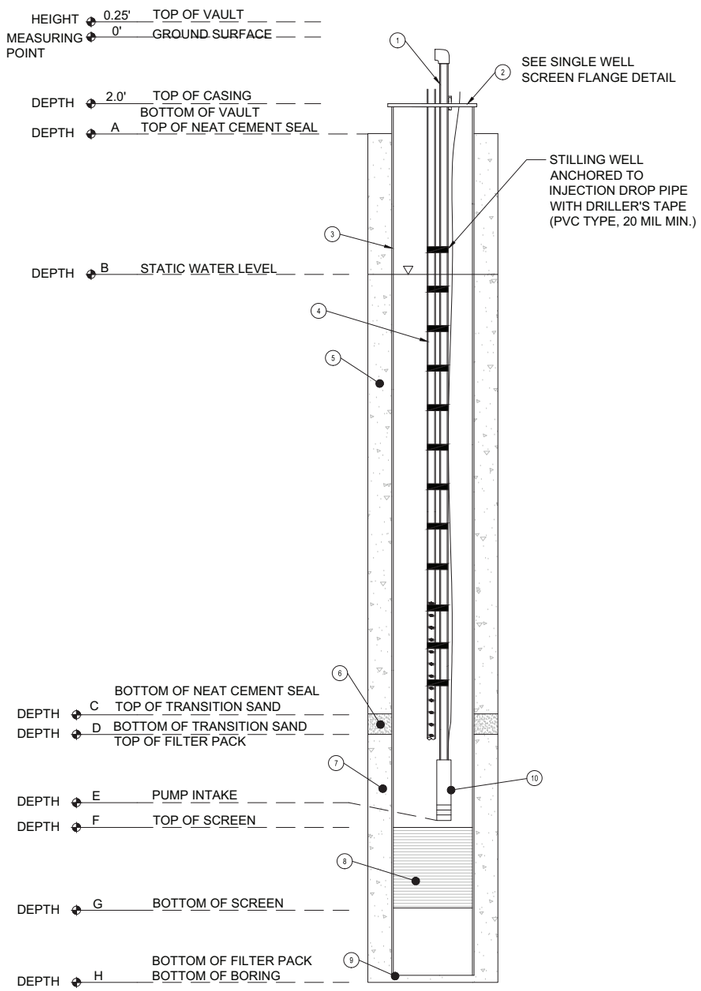

A SINGLE SCREEN EXTRACTION WELL DETAIL

NO SCALE

SEE WELL CONSTRUCTION SCHEDULE SHEET M-X-01 FOR REPRESENTATIVE DEPTHS. WELL DIAMETER EXAGGERATED TO SHOW DETAIL.

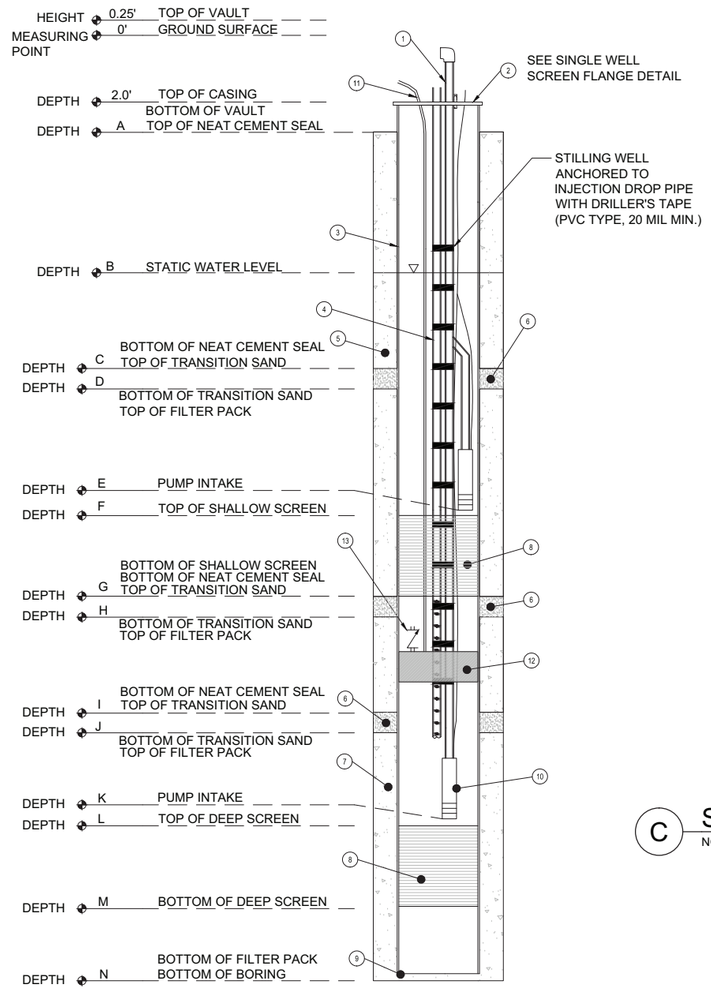

B DUAL SCREEN EXTRACTION WELL DETAIL

NO SCALE

SEE WELL CONSTRUCTION SCHEDULE SHEET M-X-01 FOR REPRESENTATIVE DEPTHS. WELL DIAMETER EXAGGERATED TO SHOW DETAIL.

1	2" PVC DROP PIPE
2	CUSTOM TAPERED WELL FLANGE
3	WELL CASING (MATERIALS TBD)
4	1" PVC TUBING (STILLING WELL WITH PRESSURE TRANSDUCER)
5	ANNULAR SPACE, 100% NEAT CEMENT GROUT
6	ANNULAR SPACE, TRANSITION SAND (SIZE TBD)
7	ANNULAR SPACE, FILTER PACK (SIZE TBD)
8	WELL SCREEN (MATERIALS & TYPE TBD)
9	SUMP
10	GROUNDWATER EXTRACTION PUMP
11	1/4" DIAMETER HOSE FROM PACKER TO FILL ASSEMBLY
12	PNEUMATIC WELL PACKER
13	3/4" PACKER PRESSURE RELIEF SAFETY VALVE

NOTES:

1. ALL DEPTH INTERVALS 'A' THRU 'K' ARE IN FEET BELOW GROUND SURFACE.
2. ALL COORDINATES BASED ON NAD83, CA ZONE V.
3. ALL WELL SEALS ARE 100% NEAT CEMENT.
4. ALL ABOVE-GRADE PIPING AND INSTRUMENTATION INSTALLED IN ACCORDANCE WITH THE P&ID AND THE WELLHEAD MECHANICAL LAYOUT

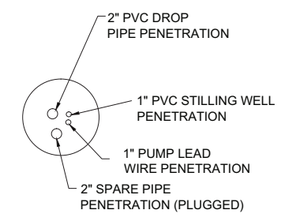

C SINGLE SCREEN WELL FLANGE DETAIL

NO SCALE

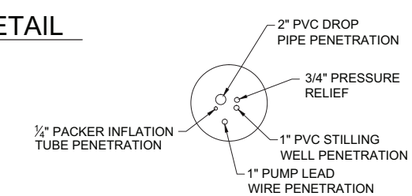

E EXTRACTION WELL PACKER DETAIL

NO SCALE

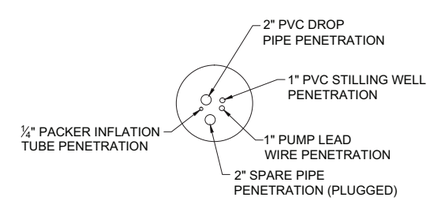

D DUAL SCREEN WELL FLANGE DETAIL

NO SCALE

- DRAFT -
NOT FOR CONSTRUCTION

ARCADIS

NO.	DATE	DESCRIPTION	GM/SPEC	DWN	CHKD	SUPV	APVD	BY
1	09/08/14	PRE-FINAL (90%) DESIGN		BEH	JPB	JPB	JEF	
0	04/05/13	INTERMEDIATE (60%) DESIGN		BEH	JPB	JPB	JEF	

REVISIONS

APPROVED BY JEF

SO
SUPV JPB
DSGN JPB
DWN BEH
CHKD JPB
OK JEF
DATE 09/08/14
SCALES AS NOTED

TOPOCK GROUNDWATER REMEDIATION PROJECT

IRZ EXTRACTION WELL CONSTRUCTION DETAILS

GAS TRANSMISSION & DISTRIBUTION
PACIFIC GAS AND ELECTRIC COMPANY
SAN FRANCISCO, CALIFORNIA

MICROFILM
BILL OF MATL
DWG LIST
SUPSDS
SUPSD BY
SHEET NO. of SHEETS
M-04-01 REV 1

N1808

08/26/2014, 15:29, G:\Graphics\ARI\TOPOCK-01\Post 90%\Well Construction Details.dwg, Tab: M-04-01

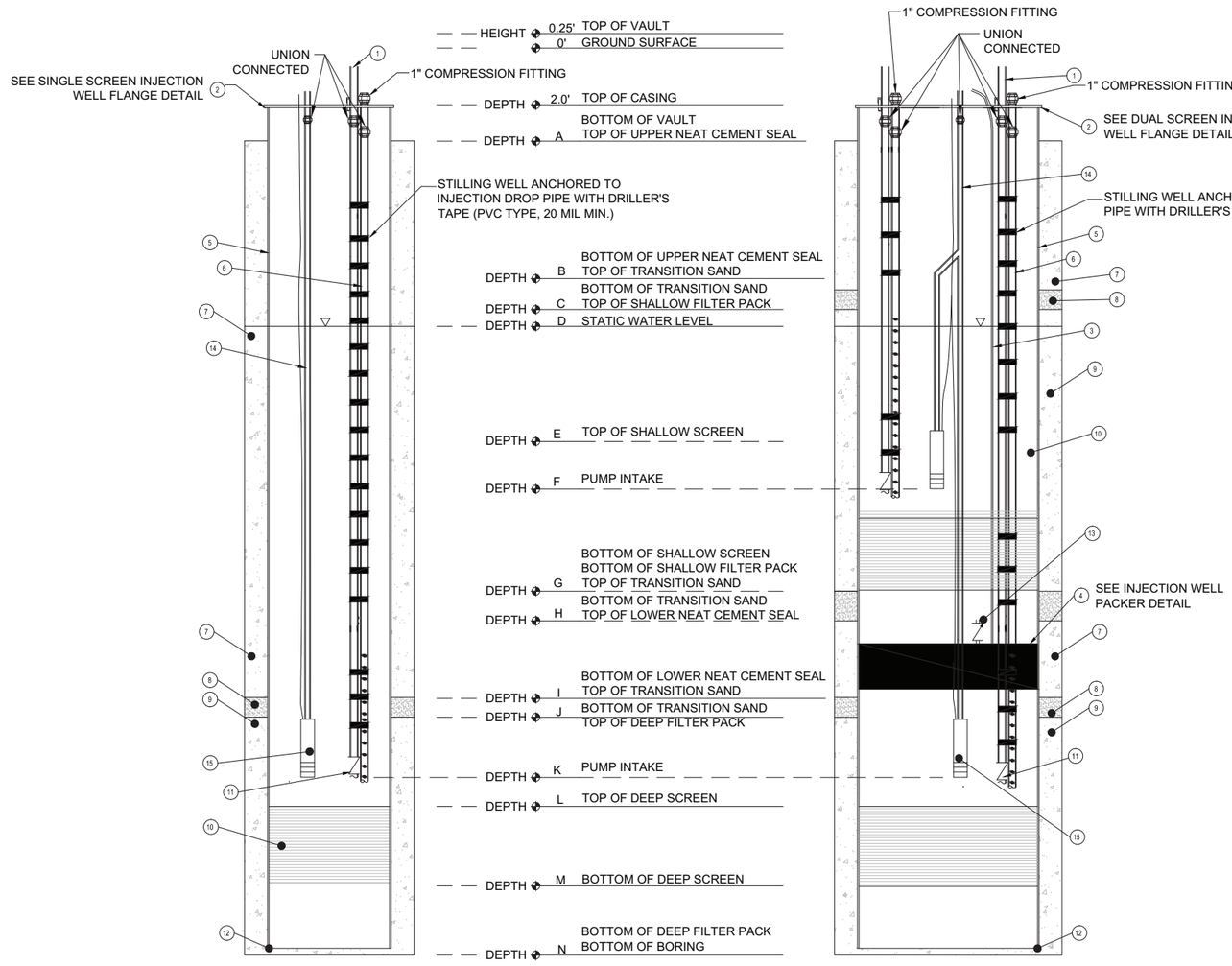

A SINGLE SCREEN INJECTION WELL WITH BACKWASH PUMP DETAIL

NO SCALE

SEE WELL CONSTRUCTION SCHEDULE SHEET M-X-01 FOR REPRESENTATIVE DEPTHS. WELL DIAMETER EXAGGERATED TO SHOW DETAIL.

B DUAL SCREEN INJECTION WELL WITH BACKWASH PUMPS DETAIL

NO SCALE

SEE WELL CONSTRUCTION SCHEDULE SHEET M-X-01 FOR REPRESENTATIVE DEPTHS. WELL DIAMETER EXAGGERATED TO SHOW DETAIL.

1	1-½" PVC DROP PIPE (MATERIALS TBD)
2	CUSTOM TAPPED WELL FLANGE
3	¼" DIAMETER HOSE FROM PACKER TO FILL ASSEMBLY
4	PNEUMATIC WELL PACKER
5	WELL CASING (MATERIALS TBD)
6	1" PVC TUBING (STILLING WELL WITH PRESSURE TRANSDUCER)
7	ANNULAR SPACE, 100% NEAT CEMENT GROUT
8	ANNULAR SPACE, TRANSITION SAND (SIZE TBD)
9	ANNULAR SPACE, FILTER PACK (TYPE TBD)
10	WELL SCREEN (MATERIALS TBD)
11	SPRING CHECK VALVE (TYPE AND MATERIALS TBD)
12	SUMP
13	¾" PACKER PRESSURE RELIEF SAFETY VALVE
14	3" BACKWASH PIPING
15	BACKWASH PUMP

NOTES:

1. ALL DEPTH INTERVALS 'A' THRU 'K' ARE IN FEET BELOW GROUND SURFACE.
2. ALL COORDINATES BASED ON NAD83, CA ZONE V.
3. ALL WELL SEALS ARE 100% NEAT CEMENT.
4. ALL ABOVE-GRADE PIPING AND INSTRUMENTATION INSTALLED IN ACCORDANCE WITH THE P&ID AND THE WELLHEAD MECHANICAL LAYOUT

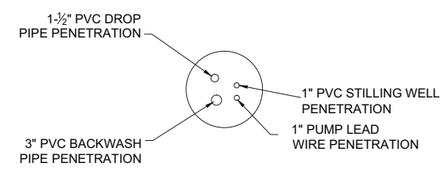

C SINGLE SCREEN WELL FLANGE DETAIL

NO SCALE

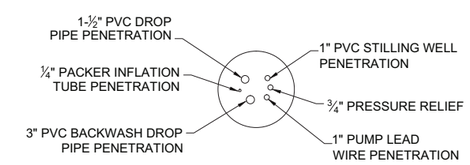

D INJECTION WELL PACKER DETAIL

NO SCALE

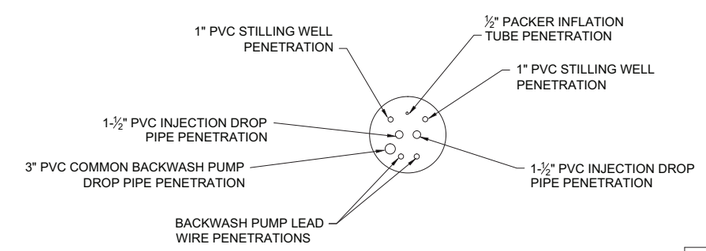

E DUAL SCREEN INJECTION WELL FLANGE DETAIL

NO SCALE

- DRAFT - NOT FOR CONSTRUCTION

ARCADIS

NO.	DATE	DESCRIPTION	GM/SPEC	DWN	CHKD	SUPV	APVD	BY
1	09/08/14	PRE-FINAL (90%) DESIGN		BEH	JPB	JPB	JEF	
0	04/05/13	INTERMEDIATE (60%) DESIGN		BEH	JPB	JPB	JEF	

REVISIONS

APPROVED BY JEF

SO
SUPV JPB
DSGN JPB
DWN BEH
CHKD JPB
OK JEF
DATE 09/08/14
SCALES AS NOTED

TOPOCK GROUNDWATER REMEDIATION PROJECT

IRZ INJECTION WELL CONSTRUCTION DETAILS

GAS TRANSMISSION & DISTRIBUTION
PACIFIC GAS AND ELECTRIC COMPANY
SAN FRANCISCO, CALIFORNIA

MICROFILM
BILL OF MATL
DWG LIST
SUPSDS
SUPSD BY
SHEET NO. of SHEETS
M-04-02
REV 1

08/26/2014, 15:29; G:\Graphics\ARI\TOPOCK-01\Post 90%\Well Construction Details.dwg, Tab: M-04-02

N180B

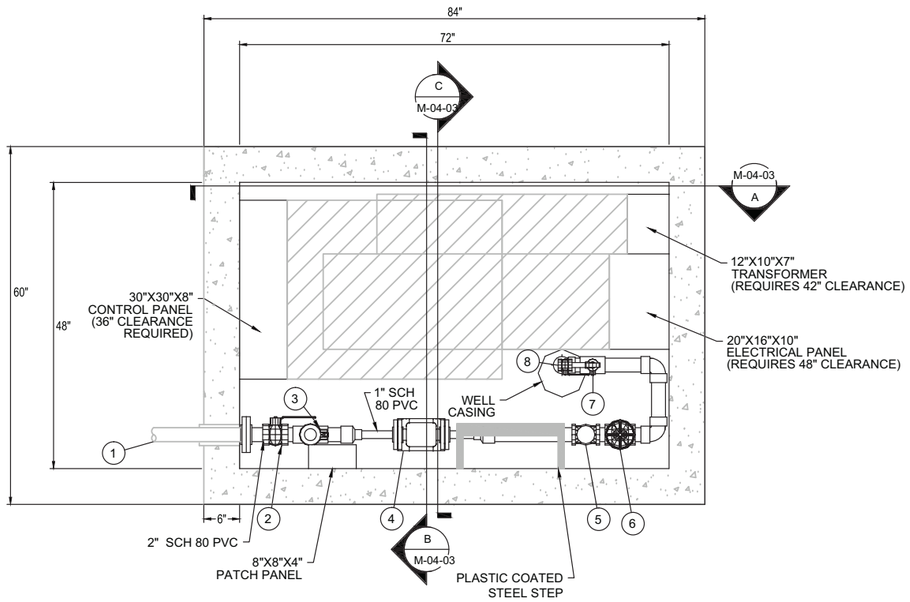

EXTRACTON WELL VAULT PLAN VIEW

1" = 1'-0"

EXTRACTION WELL VAULT SCHEDULE

ITEM	PIPE SIZE	MATERIAL	PROCESS FLOW	DESCRIPTION	ID TAG
1	2"	HDPE	EXTRACTED GROUNDWATER	EXTRACTION WELL CONVEYANCE LINE	-
2	2"	PVC	EXTRACTED GROUNDWATER	ISOLATION BALL VALVE - EQUIPPED WITH STEM EXTENSION TO ALLOW FOR OPERATION FROM OUTSIDE THE VAULT	V-*501D
3	2"	PVC	EXTRACTED GROUNDWATER	BALL VALVE	V-*501A
4	1"	TEFLON	EXTRACTED GROUNDWATER	MAGNETIC FLOWMETER	FM-*570A
5	2'	PVC	EXTRACTED GROUNDWATER	CHECK VALVE	V-*501C
6	2"	PVC	EXTRACTED GROUNDWATER	GLOBE VALVE	V-*501B
7	1/2"	TBD	EXTRACTED GROUNDWATER	PRESSURE GAUGE ASSEMBLY	V-*501E, PIT-*560A
8	1/4"	TBD	EXTRACTED GROUNDWATER	SAMPLE PORT	V-*501F

NOTES:
1. ALL PIPING, INSTRUMENTATION, AND OTHER COMPONENTS SHALL BE INSTALLED AS PER THE MANUFACTURER'S GUIDELINES.
2. ALL PIPING AND INSTRUMENTATION SHALL BE INSTALLED PER P&IDs.
3. INSTALLATION OF ELECTRIC COMPONENTS SHALL COMPLY WITH ALL APPLICABLE NEC AND LOCAL CODES.
4. CROSS SECTIONS SHOW ONLY THOSE COMPONENTS NECESSARY TO INDICATE ELEVATIONS AND SPACE REQUIREMENTS FOR PIPING AND MAJOR COMPONENTS. INSTALL PIPING AND INSTRUMENTATION PER THE P&IDs.
5. ALL INSTRUMENTATION SHALL BE INSTALLED SUCH THAT IT MAY BE READ WITHOUT ENTERING THE WELL VAULT.
6. ALL VALVE HANDLES SHALL BE INSTALLED SUCH THAT THEY ARE ACCESSIBLE WITHOUT ENTERING THE WELL VAULT AND OPERABLE THROUGH ENTIRE STROKE.
7. ALL PIPING AND CONDUIT SHALL BE SECURED TO THE WALLS OF THE CONCRETE WELL VAULT WITH ANCHOR BOLTS AND UNI-STRUT. SUPPORTS SHALL BE INSTALLED WHEREVER NECESSARY TO PROPERLY SUPPORT PIPING AND CONDUIT.
8. PIPE SIZES AND MATERIALS ARE SHOWN ON THE P&IDs.
9. PIPING KNOCKOUTS AND ROUTING OF PIPING SHOWN AS PROPOSED AND APPROXIMATE. ACTUAL ROUTING TO BE FIELD DETERMINED AND IS SUBJECT TO ENGINEER'S APPROVAL.
10. ALL FLANGES SHALL BE CLASS 150 RATE FACE FLANGES UNLESS OTHERWISE SPECIFIED.
11. ALL TRANSITION FITTINGS FOR HDPE PIPING SHALL BE FLANGED WITH BACKING RINGS.

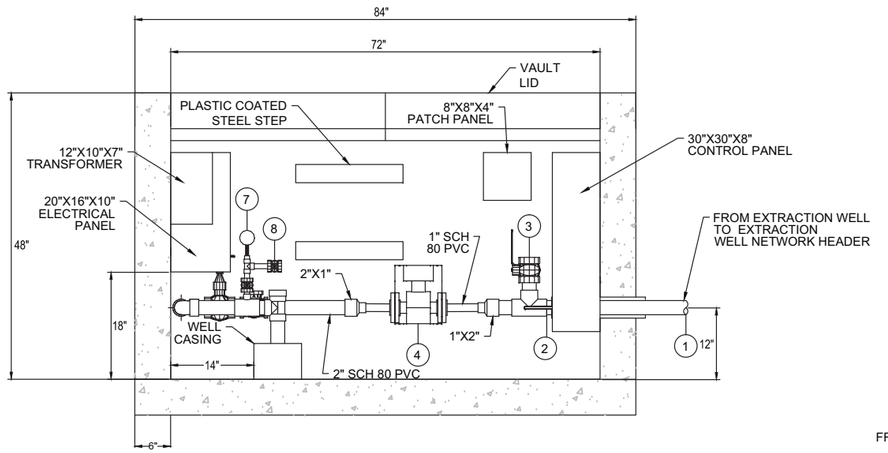

SECTION A

A — M-04-03

1"=1'-0"

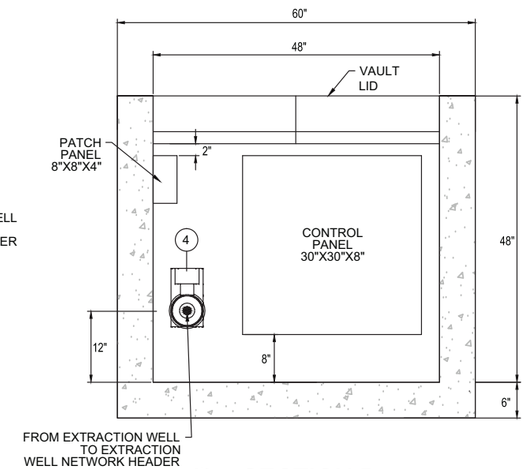

SECTION B

B — M-04-03

1"=1'-0"

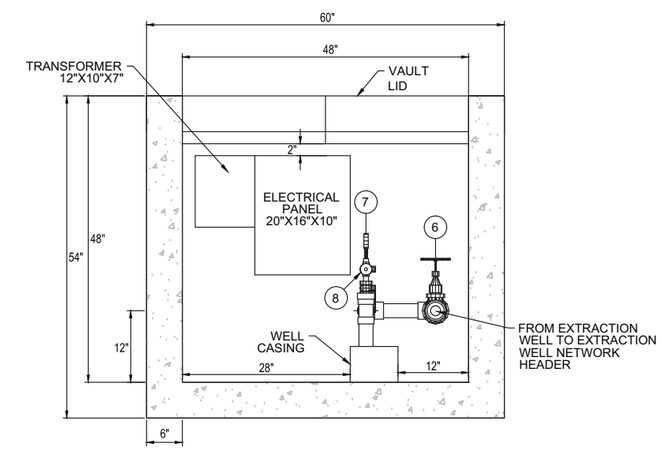

SECTION C

C — M-04-03

1"=1'-0"

- DRAFT -
NOT FOR
CONSTRUCTION

ARCADIS

NO.	DATE	DESCRIPTION	GM/SPEC	DWN	CHKD	SUPV	APVD BY
1	09/08/14	PRE-FINAL (90%) DESIGN		LUK	KLD	JPB	JEF
0	04/05/13	INTERMEDIATE (60%) DESIGN		LUK	KLD	JPB	JEF

REVISIONS

APPROVED BY: JEF

SO
SUPV JPB
DSGN KLD
DWN LUK
CHKD JPB
OK JEF
DATE 09/08/14
SCALES 1" = 1'-0"

TOPOCK GROUNDWATER REMEDIATION PROJECT

IRZ SINGLE SCREEN
EXTRACTION WELL VAULTS
MECHANICAL DETAILS

PACIFIC GAS AND ELECTRIC COMPANY
SAN FRANCISCO, CALIFORNIA

MICROFILM
BILL OF MAT'L
DWG LIST
SUPSDS
SUPSD BY
SHEET NO. of SHEETS
M-04-03
REV 1

N180B

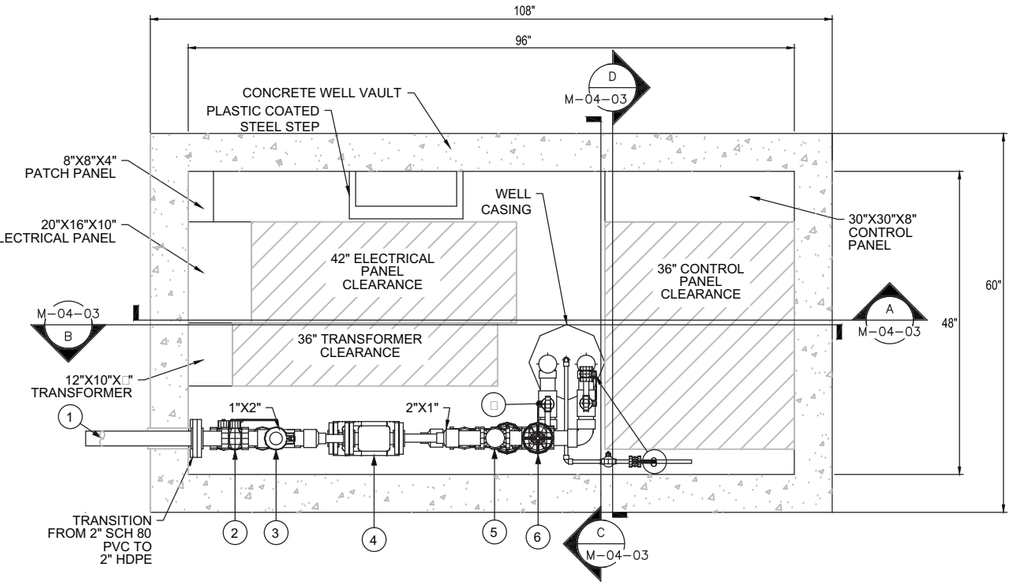

EXTRACTON WELL VAULT PLAN VIEW

1" = 1''-0"

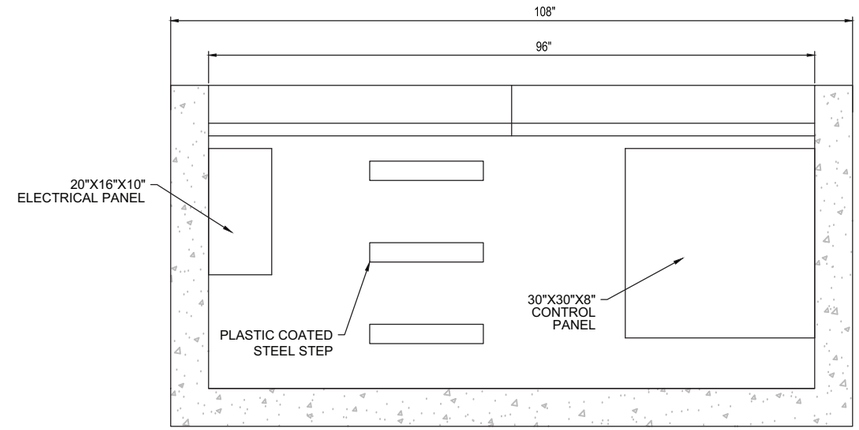

A SECTION A

1"=1'-0"

M-04-03

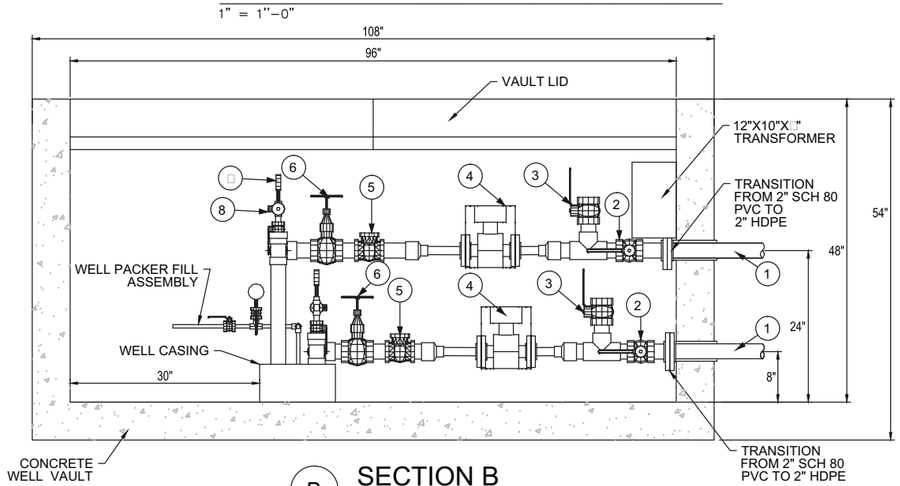

B SECTION B

1"=1'-0"

M-04-03

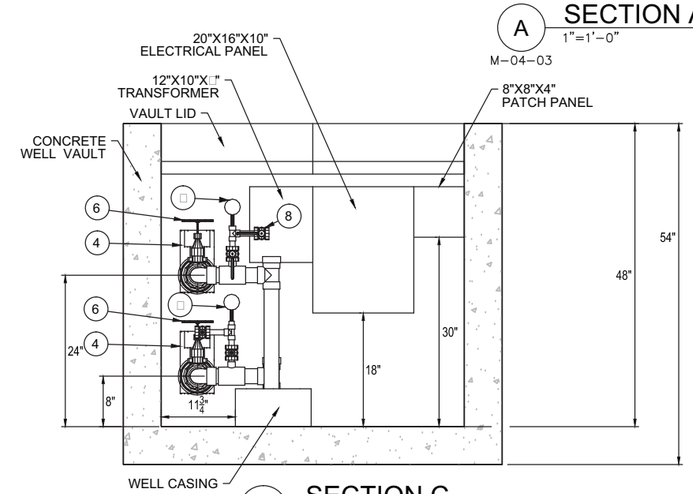

C SECTION C

1"=1'-0"

M-04-03

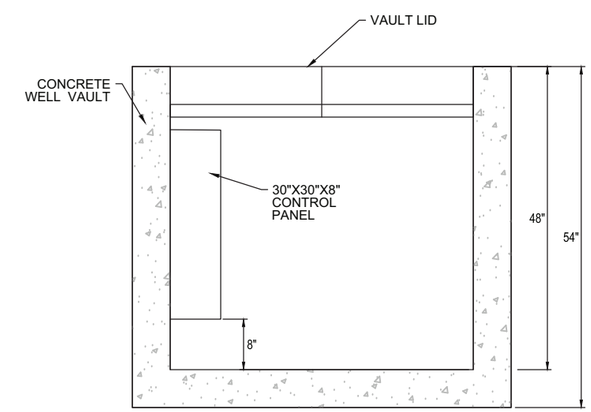

D SECTION D

1"=1'-0"

M-04-03

EXTRACTION WELL VAULT SCHEDULE

ITEM	PIPE SIZE	MATERIAL	PROCESS FLOW	DESCRIPTION	ID TAG
1	2"	HDPE	EXTRACTED GROUNDWATER	EXTRACTION WELL CONVEYANCE LINE	-
2	2"	PVC	EXTRACTED GROUNDWATER	ISOLATION BALL VALVE - E□UIPPED WITH STEM EXTENSION TO ALLOW FOR OPERATION FROM OUTSIDE THE VAULT	V-*502D, V-*502H
3	2"	PVC	EXTRACTED GROUNDWATER	BALL VALVE	V-*502A, V-*502R
4	1"	TEFLON	EXTRACTED GROUNDWATER	MAGNETIC FLOW METER	FM-*571A, FM-*571B
5	2"	PVC	EXTRACTED GROUNDWATER	CHECK VALVE	V-*502C, V-*502G
6	2"	PVC	EXTRACTED GROUNDWATER	GLOBE VALVE	V-*502B, V-*502F
7	1/2"	TBD	EXTRACTED GROUNDWATER	PRESSURE GAUGE ASSEMBLY	V-*502K, V-*502N, PIT-561A, PIT-*561D
8	1/4"	TBD	EXTRACTED GROUNDWATER	SAMPLE PORT	V-*502L, V-*502M

- DRAFT -
NOT FOR CONSTRUCTION

ARCADIS

NO.	DATE	DESCRIPTION	GM/SPEC	DWN	CHKD	SUPV	APVD	BY
1	09/08/14	PRE-FINAL (90%) DESIGN		LUK	KLD	JPB	JEF	
0	04/05/13	INTERMEDIATE (60%) DESIGN		LUK	KLD	JPB	JEF	

REVISIONS

APPROVED BY: JEF

SO
SUPV JPB
DSGN KLD
DWN LUK
CHKD JPB
OK JEF
DATE 09/08/14
SCALES 1" = 1'-0"

TOPOCK GROUNDWATER REMEDIATION PROJECT
IRZ DUAL SCREEN
EXTRACTION WELL VAULTS
MECHANICAL DETAILS
GAS TRANSMISSION & DISTRIBUTION
PACIFIC GAS AND ELECTRIC COMPANY
SAN FRANCISCO, CALIFORNIA

MICROFILM
BILL OF MATL
DWG LIST
SUPSDS
SUPSD BY
SHEET NO. of SHEETS
M-04-04
REV 1

N1808

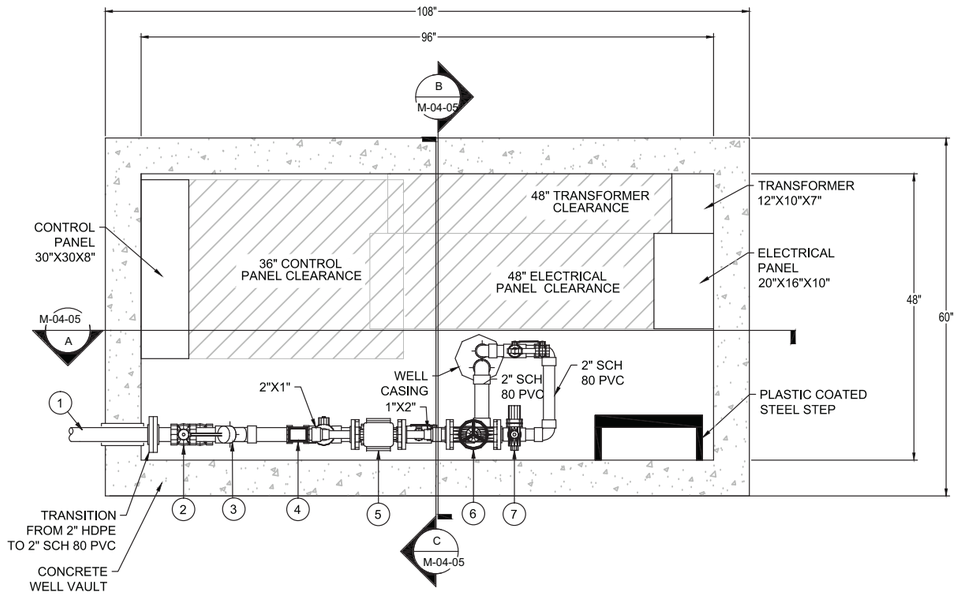

INJECTION WELL VAULT PLAN VIEW

1" = 1"-0"

INJECTION WELL VAULT SCHEDULE

ITEM	PIPE SIZE	MATERIAL	PROCESS FLOW	DESCRIPTION	ID TAG
1	2"	HDPE	CARBON AMENDED GROUNDWATER	CARBON AMENDED GROUNDWATER CONVEYANCE LINE	-
2	2"	PVC	CARBON AMENDED GROUNDWATER	ISOLATION BALL VALVE EQUIPPED WITH STEM EXTENSION TO ALLOW FOR OPERATION FROM OUTSIDE OF VAULT	V-*503A
3	2"	PVC	CARBON AMENDED GROUNDWATER	WYE STRAINER	F-*503
4	2"	TBD	CARBON AMENDED GROUNDWATER	ACTUATED BALL VALVE	FV-*504
5	1"	TEFLON	CARBON AMENDED GROUNDWATER	MAGNETIC FLOW METER	FM-*572A
6	2"	PVC	CARBON AMENDED GROUNDWATER	DIAPHRAGM VALVE	V-*503B
7	2"	TBD	CARBON AMENDED GROUNDWATER	AIR/VAC RELEASE ASSEMBLY	V-*503E, V-*503C
8	1/2"	TBD	CARBON AMENDED GROUNDWATER	PRESSURE GAUGE ASSEMBLY	V-*503G, PI-*562A
9	1/4"	TBD	CARBON AMENDED GROUNDWATER	SAMPLE PORT	V-*503F
10	2"	HDPE	BACKWASH WATER	BACKWASH WATER CONVEYANCE LINE	-
11	2"	PVC	BACKWASH WATER	ISOLATION BALL VALVE EQUIPPED WITH STEM EXTENSION TO ALLOW FOR OPERATION FROM OUTSIDE OF VAULT	V-*505B
12	1/2"	TBD	BACKWASH WATER	PRESSURE GAUGE ASSEMBLY	V-*505D, PI-*562B
13	1/4"	TBD	BACKWASH WATER	SAMPLE PORT	V-*505E
14	2"	PVC	BACKWASH WATER	BALL VALVE	V-*505C
15	2"	PVC	BACKWASH WATER	CHECK VALVE	V-*505A

NOTES:

1. ALL PIPING, INSTRUMENTATION, AND OTHER COMPONENTS SHALL BE INSTALLED AS PER THE MANUFACTURER'S GUIDELINES.
2. ALL PIPING AND INSTRUMENTATION SHALL BE INSTALLED PER P&IDs.
3. INSTALLATION OF ELECTRIC COMPONENTS SHALL COMPLY WITH ALL APPLICABLE NEC AND LOCAL CODES.
4. CROSS SECTIONS SHOW ONLY THOSE COMPONENTS NECESSARY TO INDICATE ELEVATIONS AND SPACE REQUIREMENTS FOR PIPING AND MAJOR COMPONENTS. INSTALL PIPING AND INSTRUMENTATION PER THE P&IDs.
5. ALL INSTRUMENTATION SHALL BE INSTALLED SUCH THAT IT MAY BE READ WITHOUT ENTERING THE WELL VAULT.
6. ALL VALVE HANDLES SHALL BE INSTALLED SUCH THAT THEY ARE ACCESSIBLE WITHOUT ENTERING THE WELL VAULT AND OPERABLE THROUGH ENTIRE STROKE.
7. ALL PIPING AND CONDUIT SHALL BE SECURED TO THE WALLS OF THE CONCRETE WELL VAULT WITH ANCHOR BOLTS AND UNI-STRUT. SUPPORTS SHALL BE INSTALLED WHEREVER NECESSARY TO PROPERLY SUPPORT PIPING AND CONDUIT.
8. PIPE SIZES AND MATERIALS ARE SHOWN ON THE P&IDs.
9. PIPING KNOCKOUTS AND ROUTING OF PIPING SHOWN AS PROPOSED AND APPROXIMATE. ACTUAL ROUTING TO BE FIELD DETERMINED AND IS SUBJECT TO ENGINEER'S APPROVAL.
10. ALL FLANGES SHALL BE CLASS 150 RATE FACE FLANGES UNLESS OTHERWISE SPECIFIED.
11. ALL TRANSITION FITTINGS FOR HDPE PIPING SHALL BE FLANGED WITH BACKING RINGS.

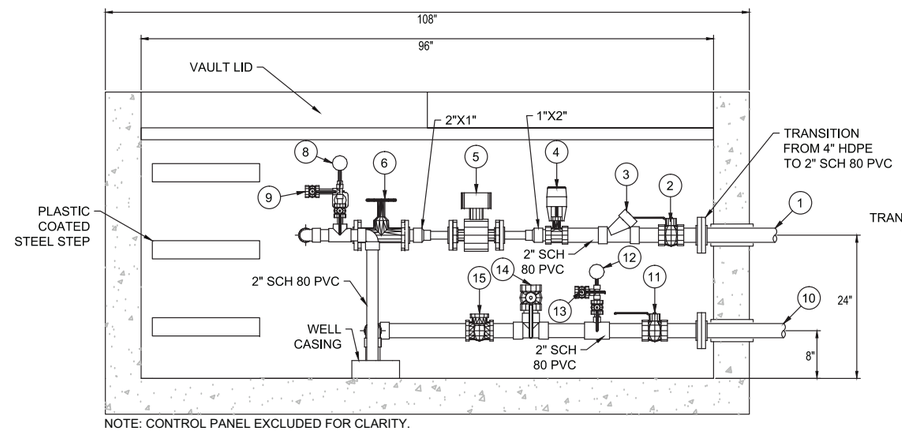

NOTE: CONTROL PANEL EXCLUDED FOR CLARITY.

A SECTION A

1"=1'-0"

M-04-05

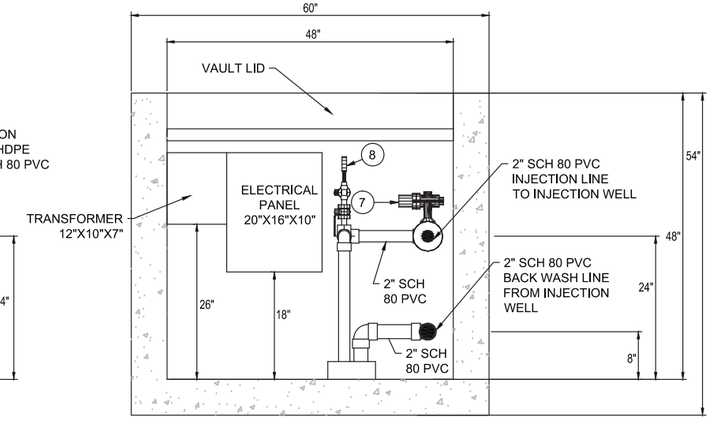

B SECTION B

1"=1'-0"

M-04-05

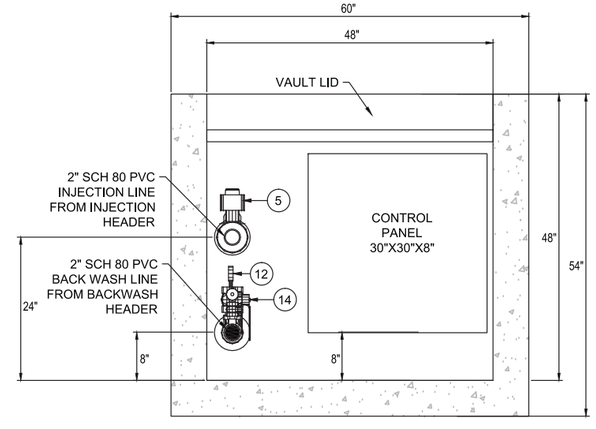

C SECTION C

1"=1'-0"

M-04-05

- DRAFT -
NOT FOR CONSTRUCTION

ARCADIS

NO.	DATE	DESCRIPTION	GM/SPEC	DWN	CHKD	SUPV	APVD BY
1	09/08/14	PRE-FINAL (90%) DESIGN		LUK	KLD	JPB	JEF
0	04/05/13	INTERMEDIATE (60%) DESIGN		LUK	KLD	JPB	JEF

REVISIONS

APPROVED BY: JEF

SO
SUPV JPB
DSGN KLD
DWN LUK
CHKD JPB
OK JEF
DATE 09/08/14
SCALES 1" = 1'-0"

TOPOCK GROUNDWATER REMEDIATION PROJECT
IRZ SINGLE SCREEN
INJECTION WELL VAULTS
MECHANICAL DETAILS
GAS TRANSMISSION & DISTRIBUTION
PACIFIC GAS AND ELECTRIC COMPANY
SAN FRANCISCO, CALIFORNIA

MICROFILM
BILL OF MATL
DWG LIST
SUPSDS
SUPSD BY
SHEET NO. of SHEETS
M-04-05
REV 1

N1808

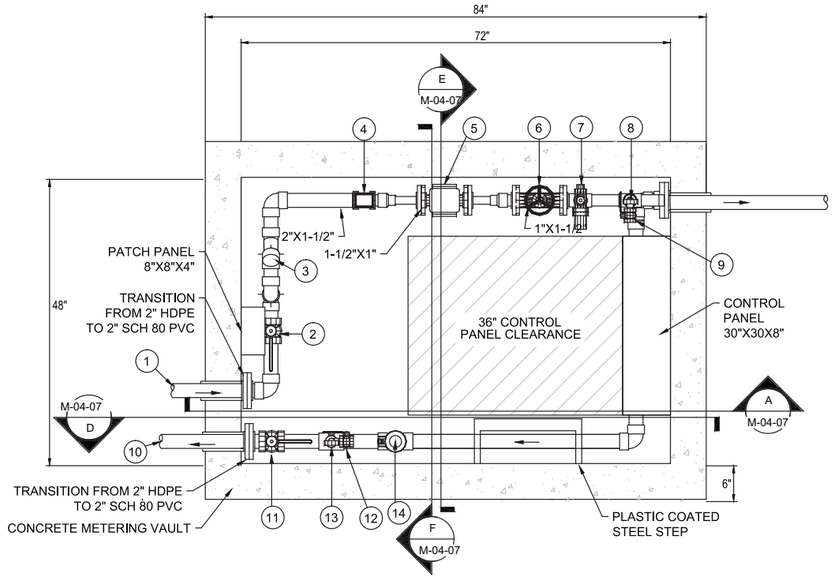

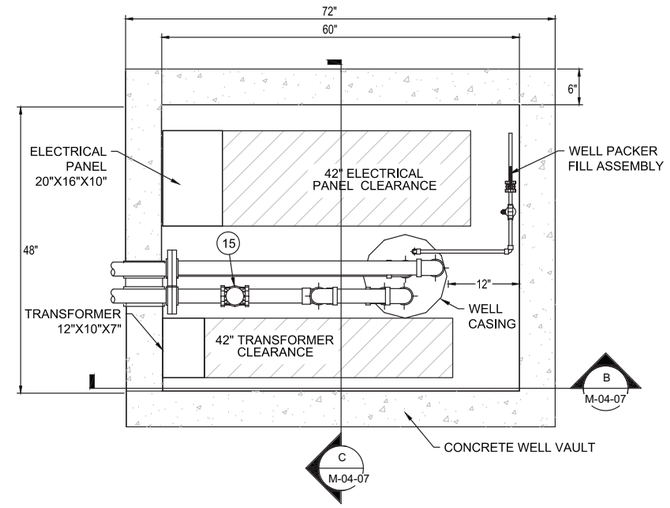

INJECTION WELL METERING AND WELL VAULT PLAN VIEW

1" = 1"-0"

NOTES:

1. ALL PIPING, INSTRUMENTATION, AND OTHER COMPONENTS SHALL BE INSTALLED AS PER THE MANUFACTURER'S GUIDELINES.
2. ALL PIPING AND INSTRUMENTATION SHALL BE INSTALLED PER P&IDs.
3. INSTALLATION OF ELECTRIC COMPONENTS SHALL COMPLY WITH ALL APPLICABLE NEC AND LOCAL CODES.
4. CROSS SECTIONS SHOW ONLY THOSE COMPONENTS NECESSARY TO INDICATE ELEVATIONS AND SPACE REQUIREMENTS FOR PIPING AND MAJOR COMPONENTS. INSTALL PIPING AND INSTRUMENTATION PER THE P&IDs.
5. ALL INSTRUMENTATION SHALL BE INSTALLED SUCH THAT IT MAY BE READ WITHOUT ENTERING THE WELL VAULT.
6. ALL VALVE HANDLES SHALL BE INSTALLED SUCH THAT THEY ARE ACCESSIBLE WITHOUT ENTERING THE WELL VAULT AND OPERABLE THROUGH ENTIRE STROKE.
7. ALL PIPING AND CONDUIT SHALL BE SECURED TO THE WALLS OF THE CONCRETE WELL VAULT WITH ANCHOR BOLTS AND UNI-STRUT. SUPPORTS SHALL BE INSTALLED WHEREVER NECESSARY TO PROPERLY SUPPORT PIPING AND CONDUIT.
8. PIPE SIZES AND MATERIALS ARE SHOWN ON THE P&IDs.
9. PIPING KNOCKOUTS AND ROUTING OF PIPING SHOWN AS PROPOSED AND APPROXIMATE. ACTUAL ROUTING TO BE FIELD DETERMINED AND IS SUBJECT TO ENGINEER'S APPROVAL.
10. ALL FLANGES SHALL BE CLASS 150 RATE FACE FLANGES UNLESS OTHERWISE SPECIFIED.
11. ALL TRANSITION FITTINGS FOR HDPE PIPING SHALL BE FLANGED WITH BACKING RINGS.

INJECTION WELL VAULT SCHEDULE

ITEM	PIPE SIZE	MATERIAL	PROCESS FLOW	DESCRIPTION	ID TAG
1	2"	HDPE	CARBON AMENDED GROUNDWATER	CARBON AMENDED GROUNDWATER CONVEYANCE LINE	-
2	2"	PVC	CARBON AMENDED GROUNDWATER	ISOLATION BALL VALVE EQUIPPED WITH STEM EXTENSION TO ALLOW FOR OPERATION FROM OUTSIDE OF VAULT	V-*507A
3	2"	PVC	CARBON AMENDED GROUNDWATER	WYE STRAINER	F-*508A, F-*508B
4	2"	TBD	CARBON AMENDED GROUNDWATER	ACTUATED BALL VALVE	FV-*508, FV-*509
5	1"	TEFLON	CARBON AMENDED GROUNDWATER	MAGNETIC FLOW METER	FM-*573A, FM-*573B
6	2"	PVC	CARBON AMENDED GROUNDWATER	DIAPHRAGM VALVE	V-*507B, V-*507E
7	2"	TBD	CARBON AMENDED GROUNDWATER	AIR/VAC RELEASE ASSEMBLY	V-*507H, V-*507C, V-*507M, V-*507F
8	1/2"	TBD	CARBON AMENDED GROUNDWATER	PRESSURE GAUGE ASSEMBLY	V-*507K, V-*507N, PI-*563A, PI-*563B
9	1/4"	TBD	CARBON AMENDED GROUNDWATER	SAMPLE PORT	V-*507L, V-*507O
10	2"	HDPE	BACKWASH WATER	BACKWASH WATER CONVEYANCE LINE	-
11	2"	PVC	BACKWASH WATER	ISOLATION BALL VALVE EQUIPPED WITH STEM EXTENSION TO ALLOW FOR OPERATION FROM OUTSIDE OF VAULT	V-*510C
12	1/2"	TBD	BACKWASH WATER	PRESSURE GAUGE ASSEMBLY	V-*507I, PI-*563C
13	1/4"	TBD	BACKWASH WATER	SAMPLE PORT	V-*507I
14	2"	PVC	BACKWASH WATER	BALL VALVE	V-*510B
15	2"	PVC	BACKWASH WATER	CHECK VALVE	V-*510A

- DRAFT -
NOT FOR
CONSTRUCTION

ARCADIS

NO.	DATE	DESCRIPTION	GM/SPEC	DWN	CHKD	SUPV	APVD BY
1	09/08/14	PRE-FINAL (90%) DESIGN		LUK	KLD	JPB	JEF
0	04/05/13	INTERMEDIATE (60%) DESIGN		LUK	KLD	JPB	JEF

REVISIONS

APPROVED BY: JEF

SO	
SUPV	JPB
DSGN	KLD
DWN	LUK
CHKD	JPB
OK	JEF
DATE	09/08/14
SCALES	1" = 1'-0"

TOPOCK GROUNDWATER REMEDIATION PROJECT
IRZ DUAL SCREEN
INJECTION WELL VAULTS
MECHANICAL DETAILS
GAS TRANSMISSION & DISTRIBUTION
PACIFIC GAS AND ELECTRIC COMPANY
SAN FRANCISCO, CALIFORNIA

MICROFILM
BILL OF MATL
DWG LIST
SUPSDS
SUPSD BY
SHEET NO. of SHEETS
M-04-06
REV 1

N1808

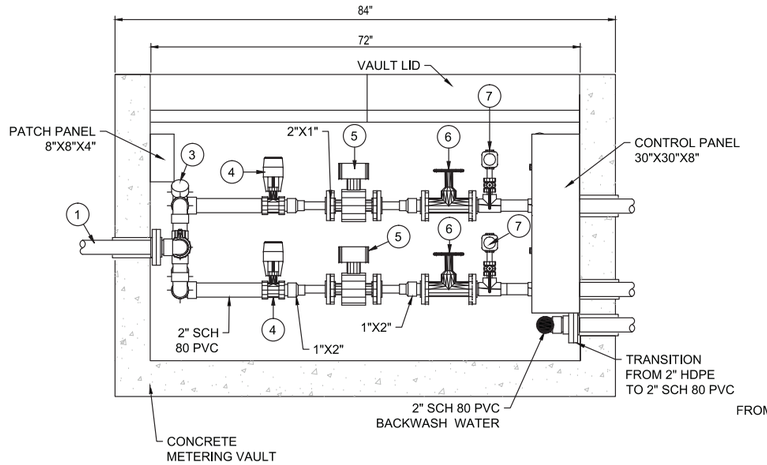

A SECTION A
1"=1'-0"
M-04-06

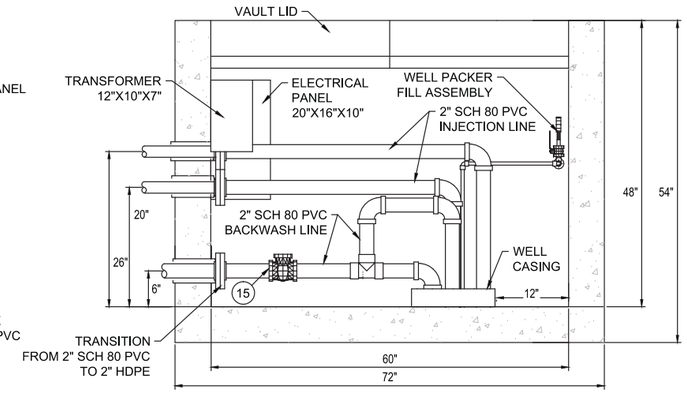

B SECTION B
1"=1'-0"
M-04-06

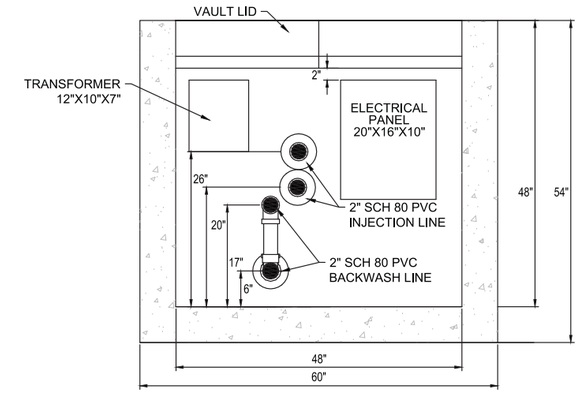

C SECTION C
1"=1'-0"
M-04-06

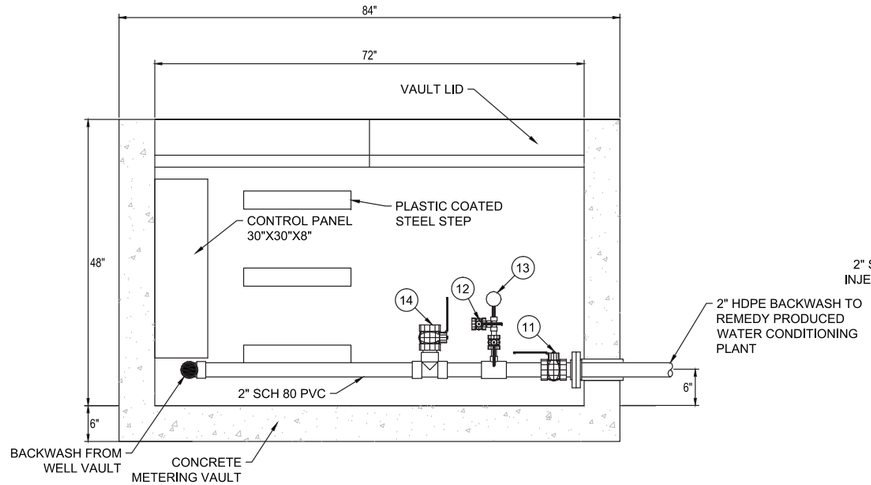

D SECTION D
1"=1'-0"
M-04-06

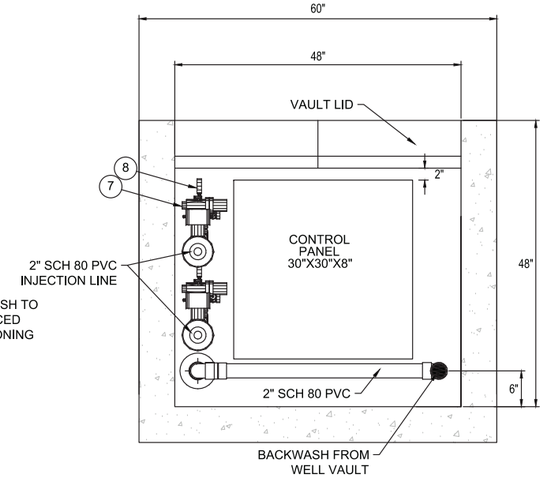

E SECTION E
1"=1'-0"
M-04-06

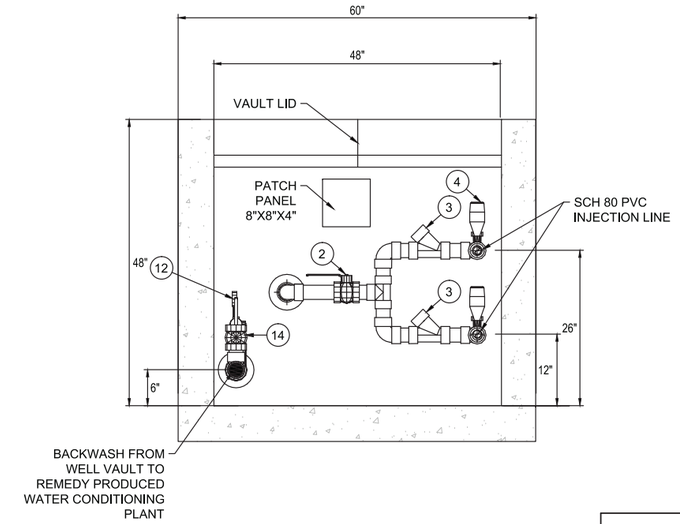

F SECTION F
1"=1'-0"
M-03-04

- DRAFT -
NOT FOR
CONSTRUCTION

ARCADIS

NO.	DATE	DESCRIPTION	GM/SPEC	DWN	CHKD	SUPV	APVD BY
1	09/08/14	PRE-FINAL (90%) DESIGN		LUK	KLD	JPB	JEF
0	04/05/13	INTERMEDIATE (60%) DESIGN		LUK	KLD	JPB	JEF

REVISIONS

APPROVED BY: JEF

SO	
SUPV	JPB
DSGN	KLD
DWN	LUK
CHKD	JPB
OK	JEF
DATE	09/08/14
SCALES	1" = 1'-0"

TOPOCK GROUNDWATER REMEDIATION PROJECT
IRZ DUAL SCREEN
INJECTION WELL VAULTS
MECHANICAL SECTIONS
GAS TRANSMISSION & DISTRIBUTION
PACIFIC GAS AND ELECTRIC COMPANY
SAN FRANCISCO, CALIFORNIA

MICROFILM
BILL OF MATL
DWG LIST
SUPSDS
SUPSD BY
SHEET NO. of SHEETS
M-04-07
REV 1

N1808

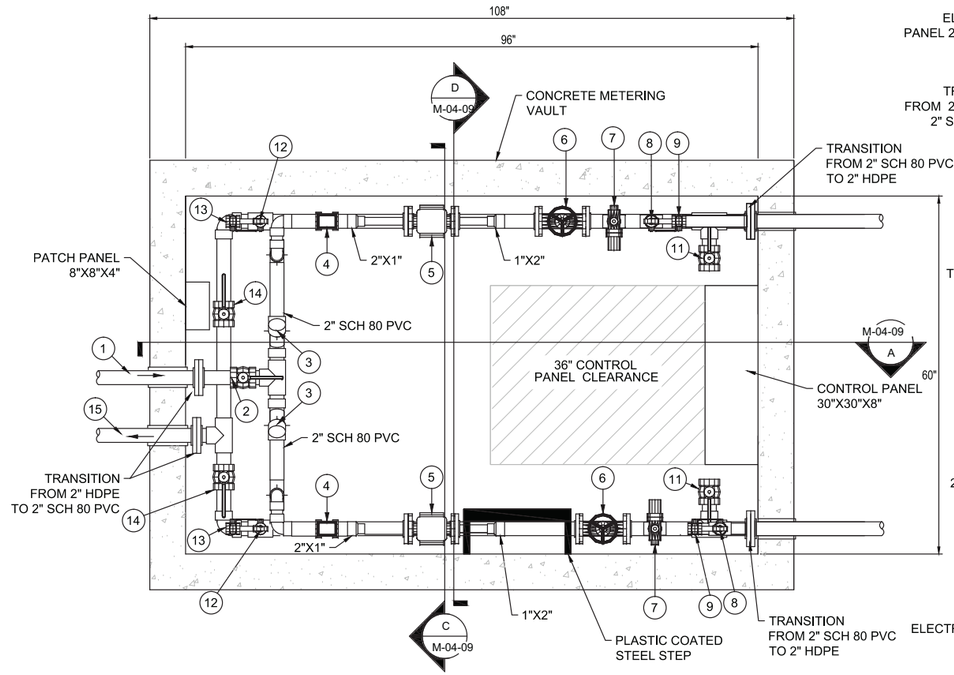

INJECTION WELL METERING AND WELL VAULT PLAN VIEW

1" = 1'-0"

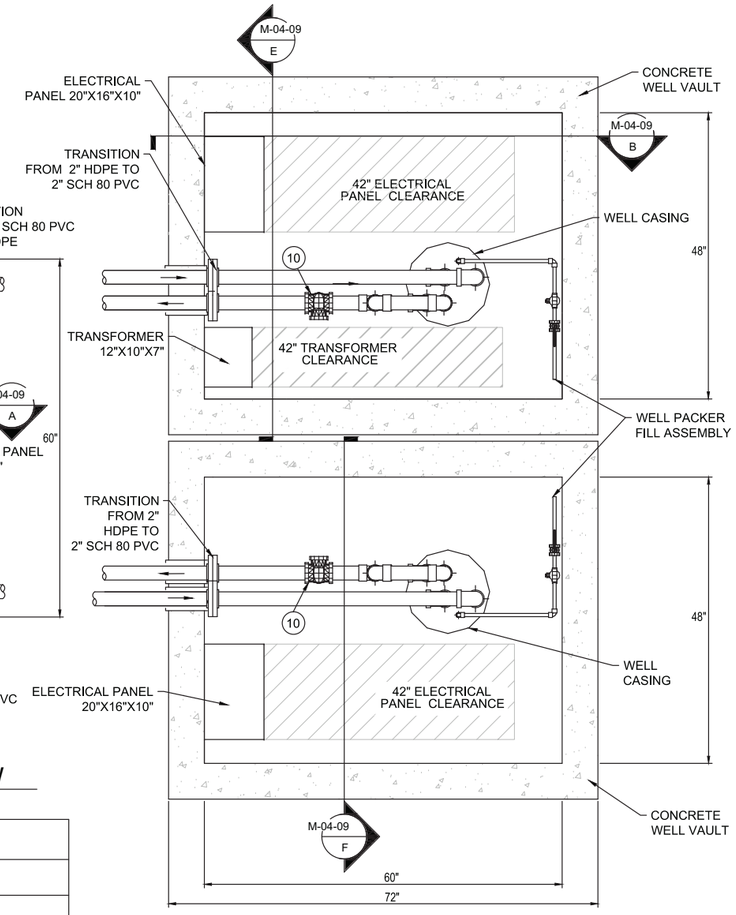

INJECTION WELL VAULT SCHEDULE

ITEM	PIPE SIZE	MATERIAL	PROCESS FLOW	DESCRIPTION	ID TAG
1	2"	HDPE	CARBON AMENDED GROUNDWATER	CARBON AMENDED CONVEYANCE LINE	-
2	2"	PVC	CARBON AMENDED GROUNDWATER	BALL VALVE	V-*513A
3	2"	PVC	CARBON AMENDED GROUNDWATER	WYE STRAINER	F-*513
4	2"	PVC	CARBON AMENDED GROUNDWATER	PROPORTIONAL ACTUATED BALL VALVE	FV-*514, FV-*515, FV-*516, FV-*517
5	1"	TEFLON	CARBON AMENDED GROUNDWATER	MAGNETIC FLOWMETER	FM-*574A, FM-*574B, FM-*575A, FM-*575B
6	2"	PVC	CARBON AMENDED GROUNDWATER	DIAPHRAGM VALVE	V-*513B, V-*513E, V-*518A, V-*518D
7	2"	TBD	CARBON AMENDED GROUNDWATER	AIR/VAC RELEASE ASSEMBLY	V-*513I, V-*513C, V-*513K, V-*513F, V-*518L, V-*518I, V-*518B, V-*518E
8	1/2"	TBD	CARBON AMENDED GROUNDWATER	PRESSURE GAUGE	V-*513H, PI-*564A, V-*513L, PI-*564B, V-*518J, V-*518G, PI-*565A, PI-*565B
9	1/4"	PVC	CARBON AMENDED GROUNDWATER	SAMPLE PORT	V-*513J, V-*513M, V-*518K, V-*518H
10	2"	PVC	BACKWASH WATER	CHECK VALVE	V-*519B, V-*520A
11	2"	PVC	BACKWASH WATER	BALL VALVE	V-*519D, V-*520D
12	1/2"	TBD	BACKWASH WATER	PRESSURE GAUGE	V-*519E, PI-*564C, V-*520E, PI-*565C
13	1/4"	TBD	BACKWASH WATER	SAMPLE PORT	V-*519F, V-*520F
14	2"	PVC	BACKWASH WATER	ISOLATION BALL VALVE EQUIPPED WITH STEM EXTENSION TO ALLOW FOR OPERATION FROM OUTSIDE OF VAULT	V-*519C, V-*520C
15	2"	PVC	BACKWASH WATER	BACKWASH WATER CONVEYANCE LINE	-

NOTES:

1. ALL PIPING, INSTRUMENTATION, AND OTHER COMPONENTS SHALL BE INSTALLED AS PER THE MANUFACTURER'S GUIDELINES.
2. ALL PIPING AND INSTRUMENTATION SHALL BE INSTALLED PER P&IDs.
3. INSTALLATION OF ELECTRIC COMPONENTS SHALL COMPLY WITH ALL APPLICABLE NEC AND LOCAL CODES.
4. CROSS SECTIONS SHOW ONLY THOSE COMPONENTS NECESSARY TO INDICATE ELEVATIONS AND SPACE REQUIREMENTS FOR PIPING AND MAJOR COMPONENTS. INSTALL PIPING AND INSTRUMENTATION PER THE P&IDs.
5. ALL INSTRUMENTATION SHALL BE INSTALLED SUCH THAT IT MAY BE READ WITHOUT ENTERING THE WELL VAULT.
6. ALL VALVE HANDLES SHALL BE INSTALLED SUCH THAT THEY ARE ACCESSIBLE WITHOUT ENTERING THE WELL VAULT AND OPERABLE THROUGH ENTIRE STROKE.
7. ALL PIPING AND CONDUIT SHALL BE SECURED TO THE WALLS OF THE CONCRETE WELL VAULT WITH ANCHOR BOLTS AND UNI-STRUT. SUPPORTS SHALL BE INSTALLED WHEREVER NECESSARY TO PROPERLY SUPPORT PIPING AND CONDUIT.
8. PIPE SIZES AND MATERIALS ARE SHOWN ON THE P&IDs.
9. PIPING KNOCKOUTS AND ROUTING OF PIPING SHOWN AS PROPOSED AND APPROXIMATE. ACTUAL ROUTING TO BE FIELD DETERMINED AND IS SUBJECT TO ENGINEER'S APPROVAL.
10. ALL FLANGES SHALL BE CLASS 150 RATE FACE FLANGES UNLESS OTHERWISE SPECIFIED.
11. ALL TRANSITION FITTINGS FOR HDPE PIPING SHALL BE FLANGED WITH BACKING RINGS.

- DRAFT -
NOT FOR CONSTRUCTION

ARCADIS

NO.	DATE	DESCRIPTION	GM/SPEC	DWN	CHKD	SUPV	APVD BY
1	09/08/14	PRE-FINAL (90%) DESIGN		LUK	KLD	JPB	JEF
0	04/05/13	INTERMEDIATE (60%) DESIGN		LUK	KLD	JPB	JEF

REVISIONS

APPROVED BY: JEF

SO
SUPV JPB
DSGN KLD
DWN LUK
CHKD JPB
OK JEF
DATE 09/08/14
SCALES 1" = 1'-0"

TOPOCK GROUNDWATER REMEDIATION PROJECT
IRZ DUAL SCREEN CLUSTER INJECTION WELL VAULTS MECHANICAL DETAILS
PACIFIC GAS AND ELECTRIC COMPANY
SAN FRANCISCO, CALIFORNIA

MICROFILM
BILL OF MATL
DWG LIST
SUPSDS
SUPSD BY
SHEET NO. of SHEETS
M-04-08
REV 1

N1808

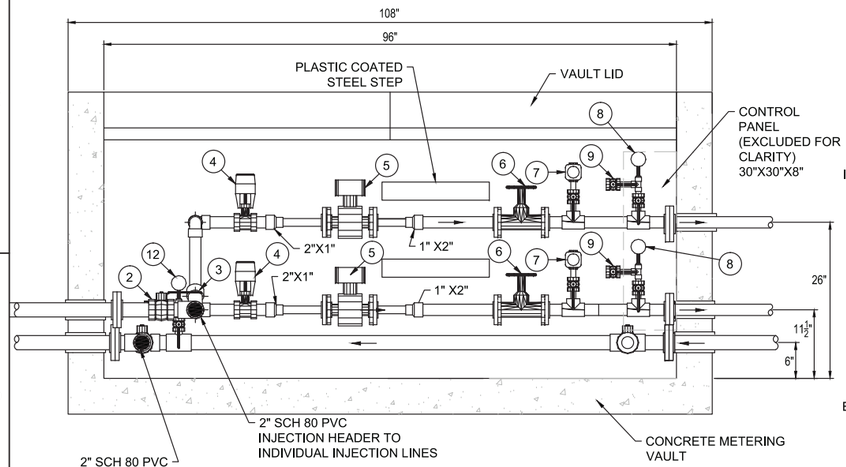

A SECTION A
1"=1'-0"
M-04-08

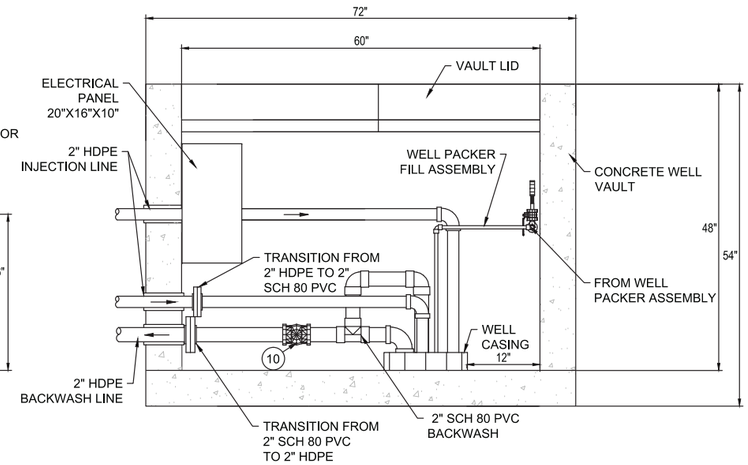

B SECTION B
1"=1'-0"
M-04-08

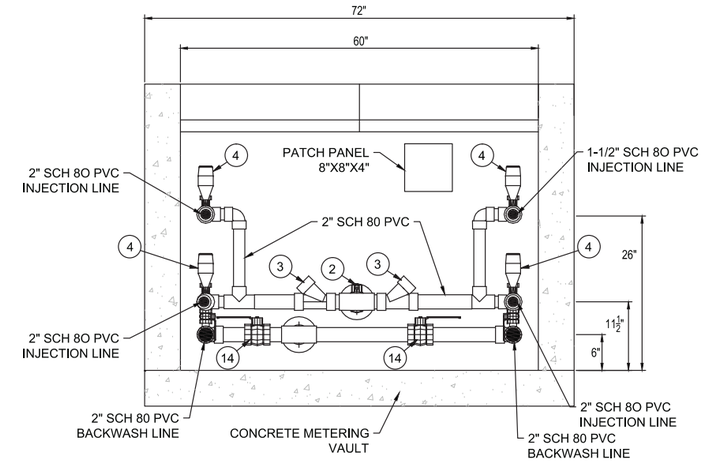

C SECTION C
1"=1'-0"
M-04-08

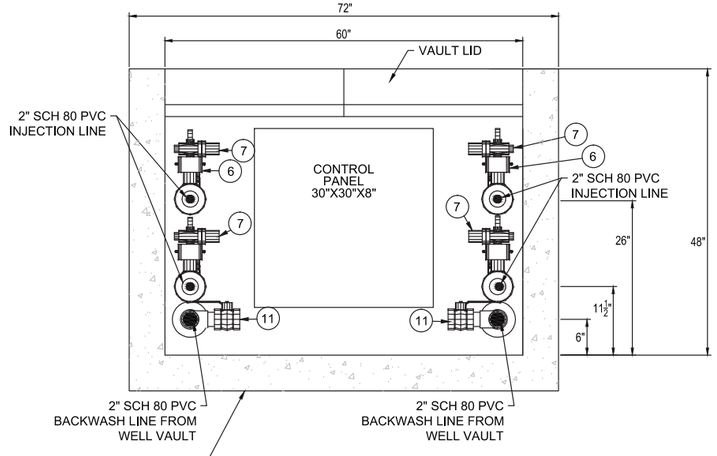

D SECTION D
1"=1'-0"
M-04-08

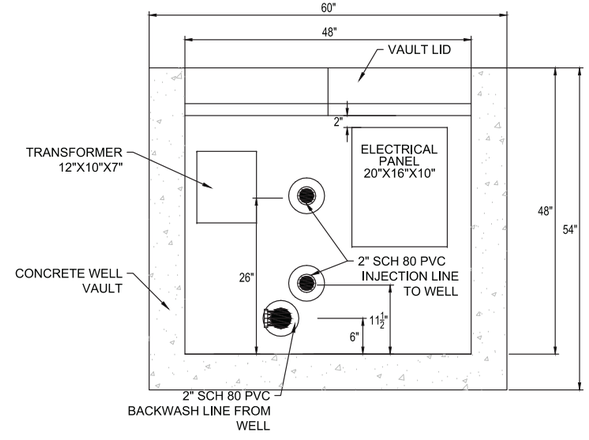

E SECTION E
1"=1'-0"
M-04-08

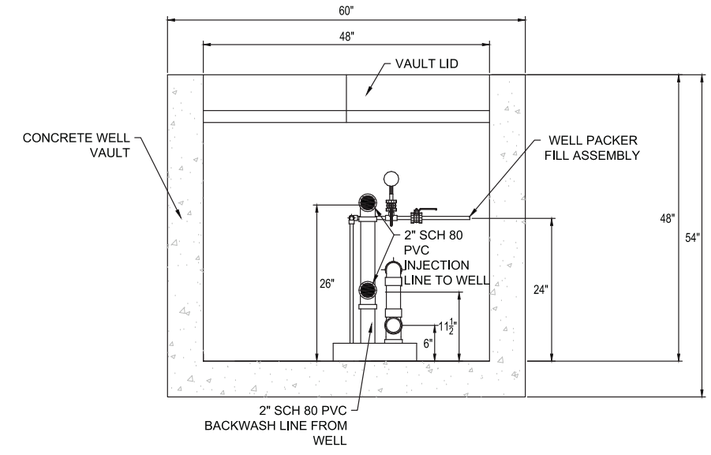

F SECTION F
1"=1'-0"
M-04-08

- DRAFT -
NOT FOR CONSTRUCTION

ARCADIS

NO.	DATE	DESCRIPTION	GM/SPEC	DWN	CHKD	SUPV	APVD BY
1	09/08/14	PRE-FINAL (90%) DESIGN		LUK	KLD	JPB	JEF
0	04/05/13	INTERMEDIATE (60%) DESIGN		LUK	KLD	JPB	JEF

REVISIONS

APPROVED BY: JEF

SO	
SUPV	JPB
DSGN	KLD
DWN	LUK
CHKD	JPB
OK	JEF
DATE	09/08/14
SCALES	1" = 1'-0"

TOPOCK GROUNDWATER REMEDIATION PROJECT

IRZ DUAL SCREEN CLUSTER INJECTION WELL VAULTS MECHANICAL SECTIONS

GAS TRANSMISSION & DISTRIBUTION

PACIFIC GAS AND ELECTRIC COMPANY
SAN FRANCISCO, CALIFORNIA

MICROFILM
BILL OF MATL
DWG LIST
SUPSDS
SUPSD BY
SHEET NO. of SHEETS
M-04-09
REV 1

N180B

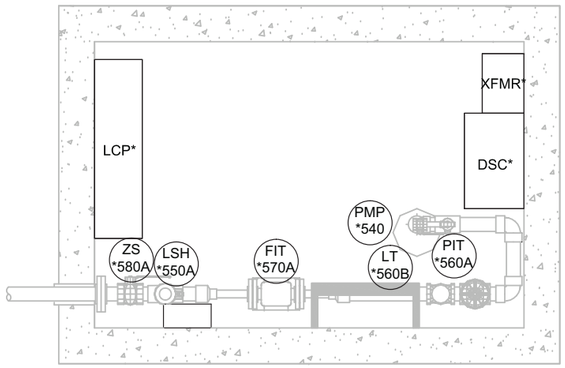

WELL VAULT ELECTRICAL AND INSTRUMENTATION PLAN

1" = 1"-0"

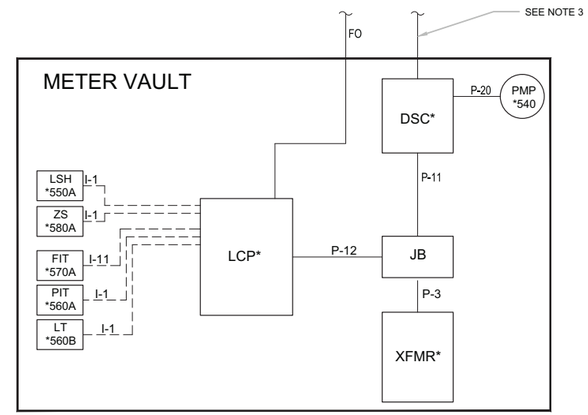

WELL VAULT ELECTRICAL AND INSTRUMENTATION PLAN

NOT TO SCALE

NOTES:

1. CONDUIT ROUTING WITHIN VAULTS TO BE DETERMINED BY CONTRACTOR AND APPROVED BY ENGINEER.
2. "*" IS A PLACEHOLDER FOR THE LOCATION ID. SEE DESCRIPTION BELOW FOR FULL LOCATION ID NUMBER.
3. REFER TO CONDUIT AND CABLE SCHEDULES AND SINGLE LINE DIAGRAMS ON SHEETS E-00-12 THROUGH E-00-20 FOR VAULT MAIN POWER FEED CONDUIT AND WIRE SIZES.

LEGEND

CP	CONTROL PANEL
DSC	DISCONNECT
JB	JUNCTION BOX
P	POWER
I	INSTRUMENTATION
C	CABLE (POWER)
FO	FIBER OPTIC
XFMR	TRANSFORMER
_ _ _ _ _	MULTICONDUCTOR SHIELDED CABLE

NODE WELL VAULT
TYPE WELL ID
DSC-xx-IRZxx-x

WELLS RISER DIAGRAM CONDUCTOR SCHEDULE

SYMBOL	WIRE TYPE, SIZE, AND QTY.	CONDUCTOR OR CABLE TYPE	CONDUIT SIZE (INCHES)
P-1A P-1B	REFER TO SINGLE LINE DIAGRAM.		
P-11	(2)#12 BLK, (2)#12 GRN,(7)#14YEL, (1)#14WHT	XHHW	1
P-12	(1)#12RED, (1)#12WHT, (1)#12GRN, (7)#14YEL, (1)#14WHT	XHHW	1
P-2	(5) #12 BLK, (3) #12 GRN, (14)#14YEL, (2)#14WHT	XHHW	2
P-20	(3) #12 BLK, (1) #12 GRN	XHHW	3/4"
P-3	(2)#12BLK, (2)#12GRN,(1)#12RED, (1)#12WHT	XHHW	1
P-4	(3) #12 BLK, (1) #12 GRN, (7)#14YEL, (1)#14WHT	XHHW	1
P-5	(1)#12RED, (1)#12WHT, (1)#12GRN, (4)14YEL, (2)#14WHT	XHHW	1
FO	MULTI-MODE FIBER OPTIC		2
I-1	(1) #16, 2 CONDUCTOR SHIELDED CABLE	BELDEN 9952	3/4"
I-11	(1) #16, 4 CONDUCTOR SHIELDED CABLE	BELDEN 9954	3/4"
I-17	(1) #18, 7 CONDUCTOR SHIELDED CABLE	BELDEN 5305FE	3/4"
C-1	SOW CABLE (1)#16BLK, (1)#16WHT, (1)#16GRN	XHHW	3/4"
NOTE:	THIS SCHEDULE APPLIES TO ALL VAULT RISER DIAGRAMS. SOME OF THE SYMBOLS MAY NOT BE USED ON THIS DRAWING.		

- DRAFT -
NOT FOR CONSTRUCTION

ARCADIS

NO.	DATE	DESCRIPTION	GM/SPEC	DWN	CHKD	SUPV	APVD BY
1	09/08/14	PRE-FINAL (90%) DESIGN		LUK	KLD	JPB	JEF
0	04/05/13	INTERMEDIATE (60%) DESIGN		LUK	KLD	JPB	JEF

REVISIONS

APPROVED BY JEF

SO	
SUPV	JPB
DSGN	KLD
DWN	LUK
CHKD	JPB
OK	JEF
DATE	09/08/14
SCALES	1" = 1'-0"

TOPOCK GROUNDWATER REMEDIATION PROJECT
IRZ SINGLE SCREEN EXTRACTION WELL ELECTRICAL PLAN
PACIFIC GAS AND ELECTRIC COMPANY
SAN FRANCISCO, CALIFORNIA

MICROFILM	
BILL OF MAT'L	
DWG LIST	
SUPSDS	
SUPSD BY	
SHEET NO. of SHEETS	
E-04-01	REV 1

N180B

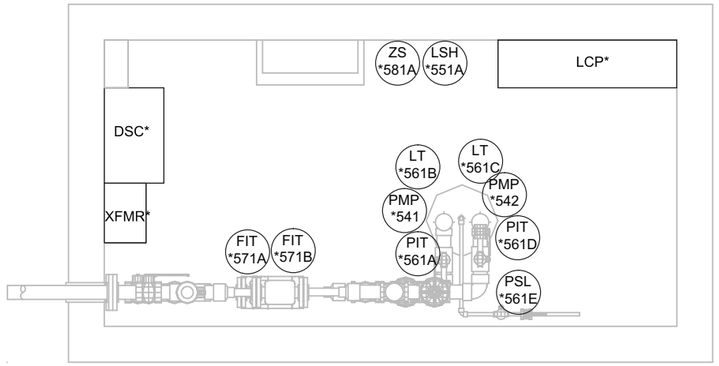

EXTRACTON WELL VAULT ELECTRICAL AND INSTURMENTATION DETAILS

1" = 1"–0"

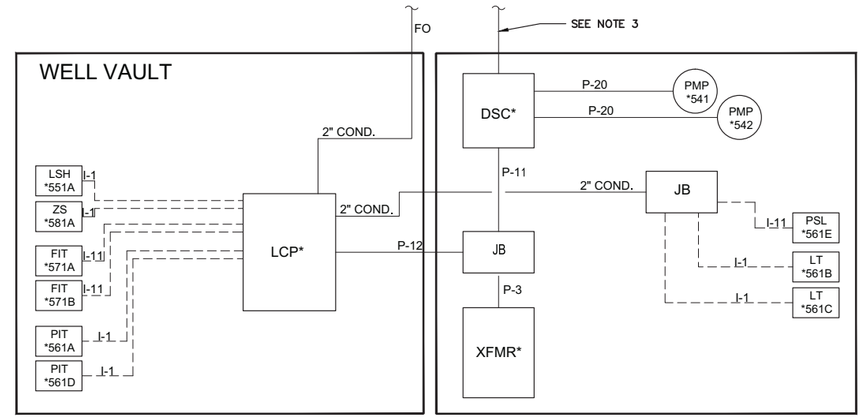

EXTRACTON WELL VAULT RISER DIAGRAM

NOT TO SCALE

NOTES:

1. CONDUIT ROUTING WITHIN VAULTS TO BE DETERMINED BY CONTRACTOR AND APPROVED BY ENGINEER.
2. "*" IS A PLACEHOLDER FOR THE LOCATION ID. SEE DESCRIPTION BELOW FOR FULL LOCATION ID NUMBER.
3. REFER TO CONDUIT AND CABLE SCHEDULES AND SINGLE LINE DIAGRAMS ON SHEETS E-00-20 FOR VAULT MAIN POWER FEED CONDUIT AND WIRE SIZES.

LEGEND

CP	CONTROL PANEL
DSC	DISCONNECT
JB	JUNCTION BOX
P	POWER
I	INSTRUMENTATION
C	CABLE (POWER)
FO	FIBER OPTIC
XFMR	TRANSFORMER
_ _ _ _	MULTICONDUCTOR SHIELDED CABLE

NODE WELL VAULT
TYPE WELL ID
DSC-xx-IRZxx-x

WELLS RISER DIAGRAM CONDUCTOR SCHEDULE

SYMBOL	WIRE TYPE, SIZE, AND QTY.	CONDUCTOR OR CABLE TYPE	CONDUIT SIZE (INCHES)
P-1A	REFER TO SINGLE LINE DIAGRAM.		
P-1B			
P-11	(2)#12 BLK, (2)#12 GRN,(7)#14YEL, (1)#14WHT	XHHW	1
P-12	(1)#12RED, (1)#12WHT, (1)#12GRN, (7)#14YEL, (1)#14WHT	XHHW	1
P-2	(5) #12 BLK, (3) #12 GRN, (14)#14YEL, (2)#14WHT	XHHW	2
P-20	(3) #12 BLK, (1) #12 GRN	XHHW	3/4"
P-3	(2)#12BLK, (2)#12GRN,(1)#12RED, (1)#12WHT	XHHW	1
P-4	(3) #12 BLK, (1) #12 GRN, (7)#14YEL, (1)#14WHT	XHHW	1
P-5	(1)#12RED, (1)#12WHT, (1)#12GRN, (4)14YEL, (2)#14WHT	XHHW	1
FO	MULTI-MODE FIBER OPTIC		2
I-1	(1) #16, 2 CONDUCTOR SHIELDED CABLE	BELDEN 9952	3/4"
I-11	(1) #16, 4 CONDUCTOR SHIELDED CABLE	BELDEN 9954	3/4"
I-17	(1) #18, 7 CONDUCTOR SHIELDED CABLE	BELDEN 5305FE	3/4"
C-1	SOW CABLE (1)#16BLK, (1)#16WHT, (1)#16GRN	XHHW	3/4"
NOTE:	THIS SCHEDULE APPLIES TO ALL VAULT RISER DIAGRAMS. SOME OF THE SYMBOLS MAY NOT BE USED ON THIS DRAWING.		

- DRAFT -
NOT FOR CONSTRUCTION

ARCADIS

NO.	DATE	DESCRIPTION	GM/SPEC	DWN	CHKD	SUPV	APVD BY
1	09/08/14	PRE-FINAL (90%) DESIGN		AJW		JPB	JEF
0	04/05/13	INTERMEDIATE (60%) DESIGN		AJW		JPB	JEF

REVISIONS

APPROVED BY: JEF

SQ
SUPV JPB
DSGN
DWN AJW
CHKD JPB
OK JEF
DATE 09/08/14
SCALES

TOPOCK GROUNDWATER REMEDIATION PROJECT
IRZ DUAL SCREEN EXTRACTION WELL ELECTRICAL PLAN
PACIFIC GAS AND ELECTRIC COMPANY
SAN FRANCISCO, CALIFORNIA

MICROFILM
BILL OF MATL
DWG LIST
SUPSDS
SUPSD BY
SHEET NO. of SHEETS
E-04-02
REV 1

N1808

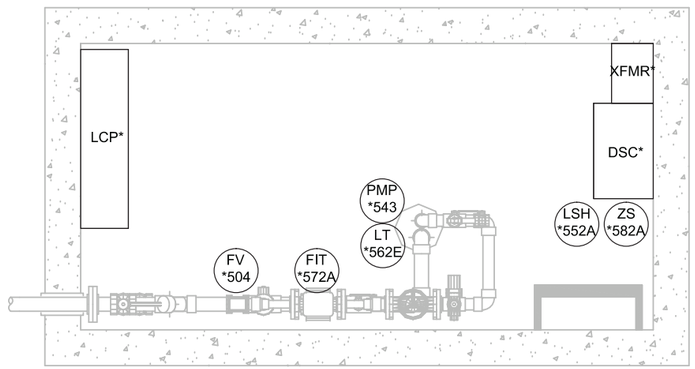

WELL VAULT ELECTRICAL AND INSTRUMENTATION PLAN

1" = 1"-0"

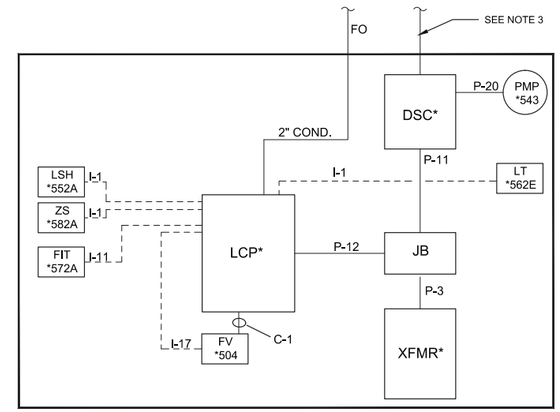

WELL VAULT RISER DIAGRAM

NOT TO SCALE

NOTES:

1. CONDUIT ROUTING WITHIN VAULTS TO BE DETERMINED BY CONTRACTOR AND APPROVED BY ENGINEER.
2. "*" IS A PLACEHOLDER FOR THE LOCATION ID. SEE DESCRIPTION BELOW FOR FULL LOCATION ID NUMBER.
3. REFER TO CONDUIT AND CABLE SCHEDULES AND SINGLE LINE DIAGRAMS ON SHEETS E-00-12 THROUGH E-00-20 FOR VAULT MAIN POWER FEED CONDUIT AND WIRE SIZES.

LEGEND

CP	CONTROL PANEL
DSC	DISCONNECT
JB	JUNCTION BOX
P	POWER
I	INSTRUMENTATION
C	CABLE (POWER)
FO	FIBER OPTIC
XFMR	TRANSFORMER
- - - - - - -	MULTICONDUCTOR SHIELDED CABLE

NODE WELL VAULT
TYPE WELL ID
DSC-xx-IRZxx-x

WELLS RISER DIAGRAM CONDUCTOR SCHEDULE

SYMBOL	WIRE TYPE, SIZE, AND QTY.	CONDUCTOR OR CABLE TYPE	CONDUIT SIZE (INCHES)
P-1A P-1B	REFER TO SINGLE LINE DIAGRAM.		
P-11	(2)#12 BLK, (2)#12 GRN,(7)#14YEL, (1)#14WHT	XHHW	1
P-12	(1)#12RED, (1)#12WHT, (1)#12GRN, (7)#14YEL, (1)#14WHT	XHHW	1
P-2	(5) #12 BLK, (3) #12 GRN, (14)#14YEL, (2)#14WHT	XHHW	2
P-20	(3) #12 BLK, (1) #12 GRN	XHHW	3/4"
P-3	(2)#12BLK, (2)#12GRN,(1)#12RED, (1)#12WHT	XHHW	1
P-4	(3) #12 BLK, (1) #12 GRN, (7)#14YEL, (1)#14WHT	XHHW	1
P-5	(1)#12RED, (1)#12WHT, (1)#12GRN, (4)14YEL, (2)#14WHT	XHHW	1
FO	MULTI-MODE FIBER OPTIC		2
I-1	(1) #16, 2 CONDUCTOR SHIELDED CABLE	BELDEN 9952	3/4"
I-11	(1) #16, 4 CONDUCTOR SHIELDED CABLE	BELDEN 9954	3/4"
I-17	(1) #18, 7 CONDUCTOR SHIELDED CABLE	BELDEN 5305FE	3/4"
C-1	SOW CABLE (1)#16BLK, (1)#16WHT, (1)#16GRN	XHHW	3/4"
NOTE:	THIS SCHEDULE APPLIES TO ALL VAULT RISER DIAGRAMS. SOME OF THE SYMBOLS MAY NOT BE USED ON THIS DRAWING.		

- DRAFT -
NOT FOR CONSTRUCTION

ARCADIS

NO.	DATE	DESCRIPTION	GM/SPEC	DWN	CHKD	SUPV	APVD	BY
1	09/08/14	PRE-FINAL (90%) DESIGN		LUK	KLD	JPB	JEF	
0	04/05/13	INTERMEDIATE (60%) DESIGN		LUK	KLD	JPB	JEF	

REVISIONS

APPROVED BY: JEF

SO	
SUPV	JPB
DSGN	KLD
DWN	LUK
CHKD	JPB
OK	JEF
DATE	09/08/14
SCALES	1" = 1'-0"

TOPOCK GROUNDWATER REMEDIATION PROJECT
NTH IRZ SINGLE SCREEN INJECTION WELL ELECTRICAL PLAN
GAS TRANSMISSION & DISTRIBUTION
PACIFIC GAS AND ELECTRIC COMPANY
SAN FRANCISCO, CALIFORNIA

MICROFILM
BILL OF MATL
DWG LIST
SUPSDS
SUPSD BY
SHEET NO. of SHEETS
E-04-03
REV 1

N1808

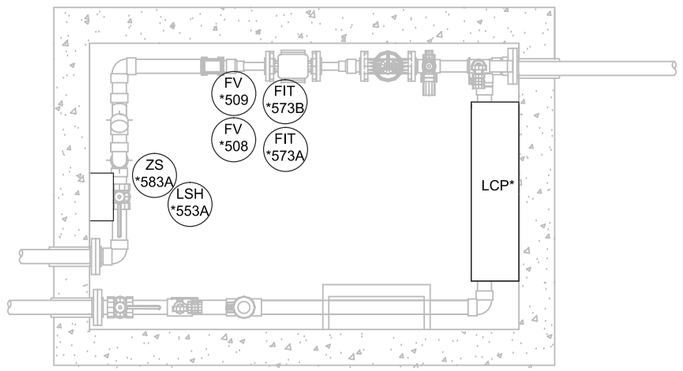

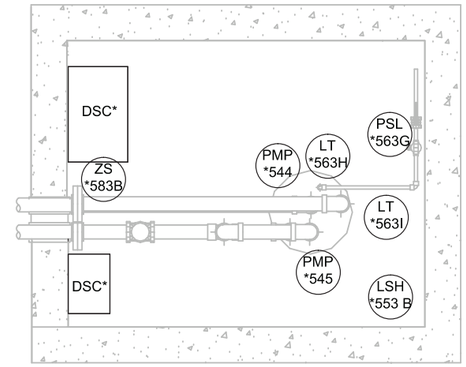

METER AND WELL VAULT ELECTRICAL AND INSTRUMENTATION PLAN

1" = 1"-0"

NOTES:

1. CONDUIT ROUTING WITHIN VAULTS TO BE DETERMINED BY CONTRACTOR AND APPROVED BY ENGINEER.
2. "*" IS A PLACEHOLDER FOR THE LOCATION ID. SEE DESCRIPTION BELOW FOR FULL LOCATION ID NUMBER.
3. REFER TO CONDUIT AND CABLE SCHEDULES AND SINGLE LINE DIAGRAMS ON SHEETS E-00-12 THROUGH E-00-20 FOR VAULT MAIN POWER FEED CONDUIT AND WIRE SIZES

LEGEND

CP	CONTROL PANEL
DSC	DISCONNECT
JB	JUNCTION BOX
P	POWER
I	INSTRUMENTATION
C	CABLE (POWER)
FO	FIBER OPTIC
XFMR	TRANSFORMER
- - - - - -	MULTICONDUCTOR SHIELDED CABLE

NODE WELL VAULT
TYPE WELL ID
DSC-xx-IRZxx-x

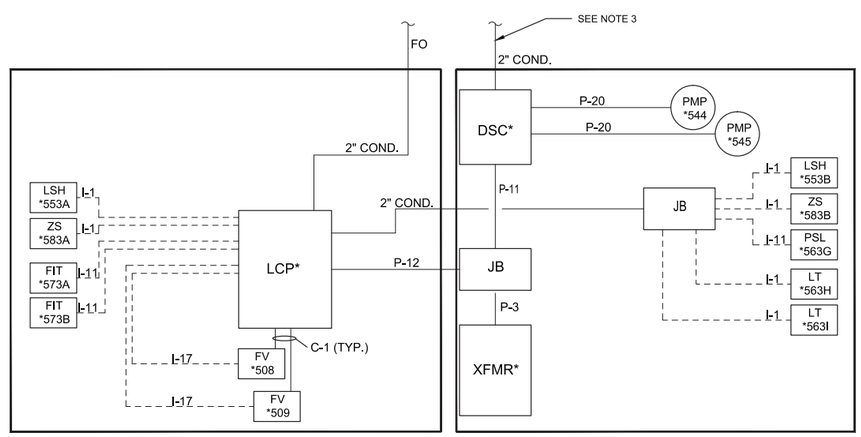

WELLS RISER DIAGRAM CONDUCTOR SCHEDULE			
SYMBOL	WIRE TYPE, SIZE, AND QTY.	CONDUCTOR OR CABLE TYPE	CONDUIT SIZE (INCHES)
P-1A	REFER TO SINGLE LINE DIAGRAM.		
P-1B			
P-11	(2)#12 BLK, (2)#12 GRN,(7)#14YEL, (1)#14WHT	XHHW	1
P-12	(1)#12RED, (1)#12WHT, (1)#12GRN, (7)#14YEL, (1)#14WHT	XHHW	1
P-2	(5) #12 BLK, (3) #12 GRN, (14)#14YEL, (2)#14WHT	XHHW	2
P-20	(3) #12 BLK, (1) #12 GRN	XHHW	3/4"
P-3	(2)#12BLK, (2)#12GRN,(1)#12RED, (1)#12WHT	XHHW	1
P-4	(3) #12 BLK, (1) #12 GRN, (7)#14YEL, (1)#14WHT	XHHW	1
P-5	(1)#12RED, (1)#12WHT, (1)#12GRN, (4)14YEL, (2)#14WHT	XHHW	1
FO	MULTI-MODE FIBER OPTIC		2
I-1	(1) #16, 2 CONDUCTOR SHIELDED CABLE	BELDEN 9952	3/4"
I-11	(1) #16, 4 CONDUCTOR SHIELDED CABLE	BELDEN 9954	3/4"
I-17	(1) #18, 7 CONDUCTOR SHIELDED CABLE	BELDEN 5305FE	3/4"
C-1	SOW CABLE (1)#16BLK, (1)#16WHT, (1)#16GRN	XHHW	3/4"
NOTE:	THIS SCHEDULE APPLIES TO ALL VAULT RISER DIAGRAMS. SOME OF THE SYMBOLS MAY NOT BE USED ON THIS DRAWING.		

METER AND WELL VAULT RISER DIAGRAM

NOT TO SCALE

- DRAFT -
NOT FOR CONSTRUCTION

ARCADIS

NO.	DATE	DESCRIPTION	GM/SPEC	DWN	CHKD	SUPV	APVD BY
1	09/08/14	PRE-FINAL (90%) DESIGN		LUK	KLD	JPB	JEF
0	04/05/13	INTERMEDIATE (60%) DESIGN		LUK	KLD	JPB	JEF

REVISIONS

APPROVED BY JEF

SO
SUPV JPB
DSGN KLD
DWN LUK
CHKD JPB
OK JEF
DATE 09/08/14
SCALES 1" = 1'-0"

TOPOCK GROUNDWATER REMEDIATION PROJECT
IRZ DUAL SCREEN INJECTION WELL ELECTRICAL PLAN
GAS TRANSMISSION & DISTRIBUTION
PACIFIC GAS AND ELECTRIC COMPANY
SAN FRANCISCO, CALIFORNIA

MICROFILM
BILL OF MATL
DWG LIST
SUPSDS
SUPSD BY
SHEET NO. of SHEETS
E-04-04
REV 1

N1808

NOTES:

1. CONDUIT ROUTING WITHIN VAULTS TO BE DETERMINED BY CONTRACTOR AND APPROVED BY ENGINEER.
2. "*" IS A PLACEHOLDER FOR THE LOCATION ID. SEE DESCRIPTION BELOW FOR FULL LOCATION ID NUMBER.
3. REFER TO CONDUIT AND CABLE SCHEDULES AND SINGLE LINE DIAGRAMS ON SHEETS E-00-12 THROUGH E-00-20 FOR VAULT MAIN POWER FEED CONDUIT AND WIRE SIZES.

LEGEND

CP	CONTROL PANEL
DSC	DISCONNECT
JB	JUNCTION BOX
P	POWER
I	INSTRUMENTATION
C	CABLE (POWER)
FO	FIBER OPTIC
XFMR	TRANSFORMER
- - - - - - -	MULTICONDUCTOR SHIELDED CABLE

TYPE — NODE — WELL ID — WELL VAULT

DSC-xx-IRZxx-x

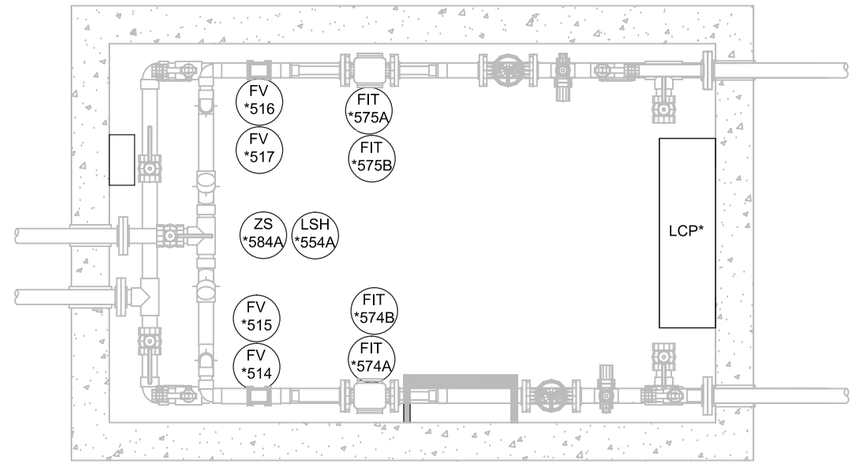

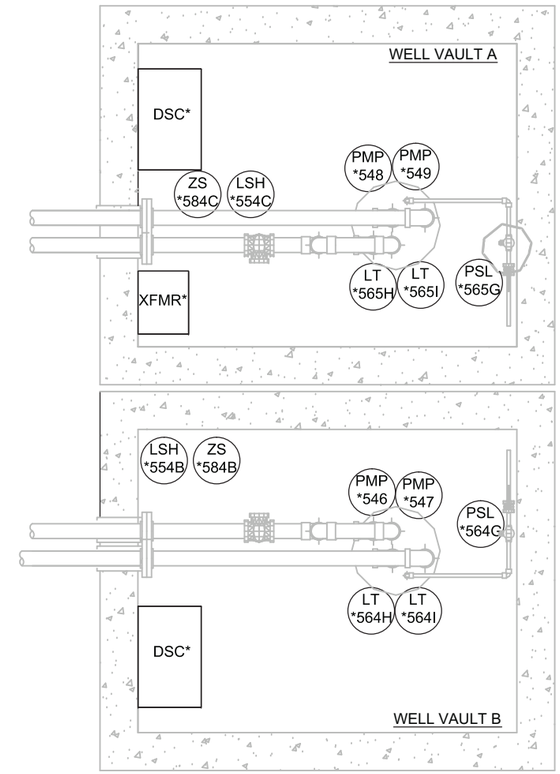

METER AND WELL VAULT ELECTRICAL & INSTRUMENTATION PLAN

1" = 1'-0"

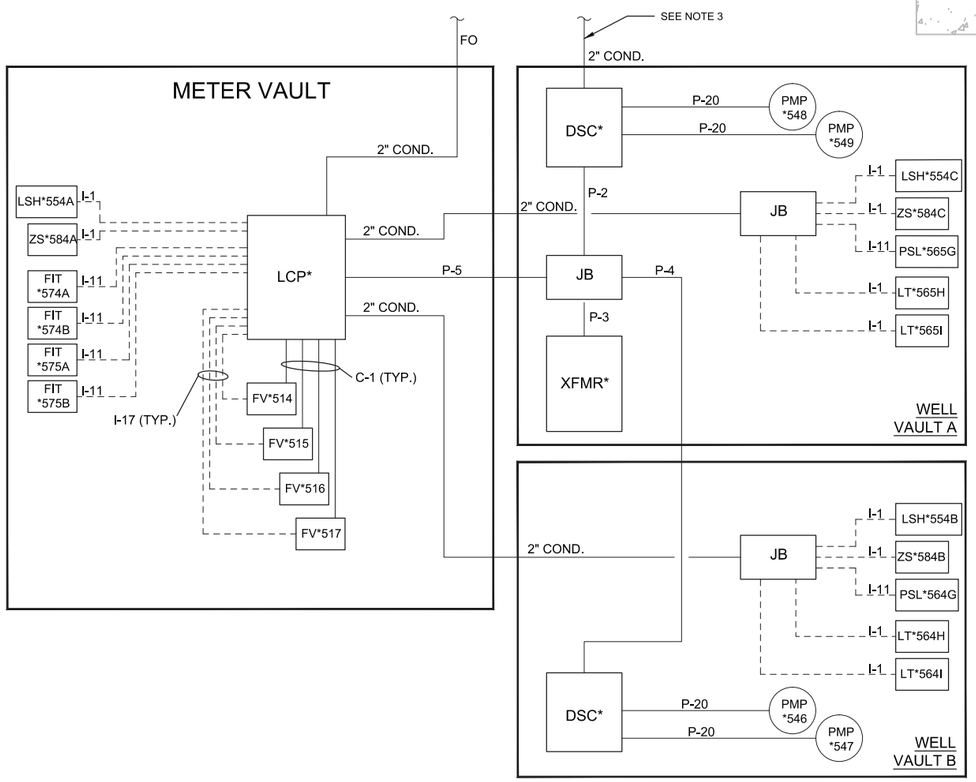

METER AND WELL VAULT RISER DIAGRAM

NOT TO SCALE

WELLS RISER DIAGRAM CONDUCTOR SCHEDULE			
SYMBOL	WIRE TYPE, SIZE, AND QTY.	CONDUCTOR OR CABLE TYPE	CONDUIT SIZE (INCHES)
P-1A	REFER TO SINGLE LINE DIAGRAM.		
P-1B			
P-11	(2)#12 BLK, (2)#12 GRN,(7)#14YEL, (1)#14WHT	XHHW	1
P-12	(1)#12RED, (1)#12WHT, (1)#12GRN, (7)#14YEL, (1)#14WHT	XHHW	1
P-2	(5) #12 BLK, (3) #12 GRN, (14)#14YEL, (2)#14WHT	XHHW	2
P-20	(3) #12 BLK, (1) #12 GRN	XHHW	3/4"
P-3	(2)#12BLK, (2)#12GRN,(1)#12RED, (1)#12WHT	XHHW	1
P-4	(3) #12 BLK, (1) #12 GRN, (7)#14YEL, (1)#14WHT	XHHW	1
P-5	(1)#12RED, (1)#12WHT, (1)#12GRN, (4)14YEL, (2)#14WHT	XHHW	1
FO	MULTI-MODE FIBER OPTIC		2
I-1	(1) #16, 2 CONDUCTOR SHIELDED CABLE	BELDEN 9952	3/4"
I-11	(1) #16, 4 CONDUCTOR SHIELDED CABLE	BELDEN 9954	3/4"
I-17	(1) #18, 7 CONDUCTOR SHIELDED CABLE	BELDEN 5305FE	3/4"
C-1	SOW CABLE (1)#16BLK, (1)#16WHT, (1)#16GRN	XHHW	3/4"
NOTE:	THIS SCHEDULE APPLIES TO ALL VAULT RISER DIAGRAMS. SOME OF THE SYMBOLS MAY NOT BE USED ON THIS DRAWING.		

- DRAFT -
NOT FOR CONSTRUCTION

ARCADIS

NO.	DATE	DESCRIPTION	GM/SPEC	DWN	CHKD	SUPV	APVD BY
1	09/08/14	PRE-FINAL (90%) DESIGN		LUK	KLD	JPB	JEF
0	04/05/13	INTERMEDIATE (60%) DESIGN		LUK	KLD	JPB	JEF

REVISIONS

APPROVED BY: JEF

SO
SUPV JPB
DSGN KLD
DWN LUK
CHKD JPB
OK JEF
DATE 09/08/14
SCALES 1" = 1'-0"

TOPOCK GROUNDWATER REMEDIATION PROJECT
IRZ DUAL SCREEN CLUSTER INJECTION WELL ELECTRICAL PLAN
GAS TRANSMISSION & ELECTRICAL PLAN
PACIFIC GAS AND ELECTRIC COMPANY
SAN FRANCISCO, CALIFORNIA

MICROFILM
BILL OF MATL
DWG LIST
SUPSDS
SUPSD BY
SHEET NO. of SHEETS
E-04-05
REV 1

N1808

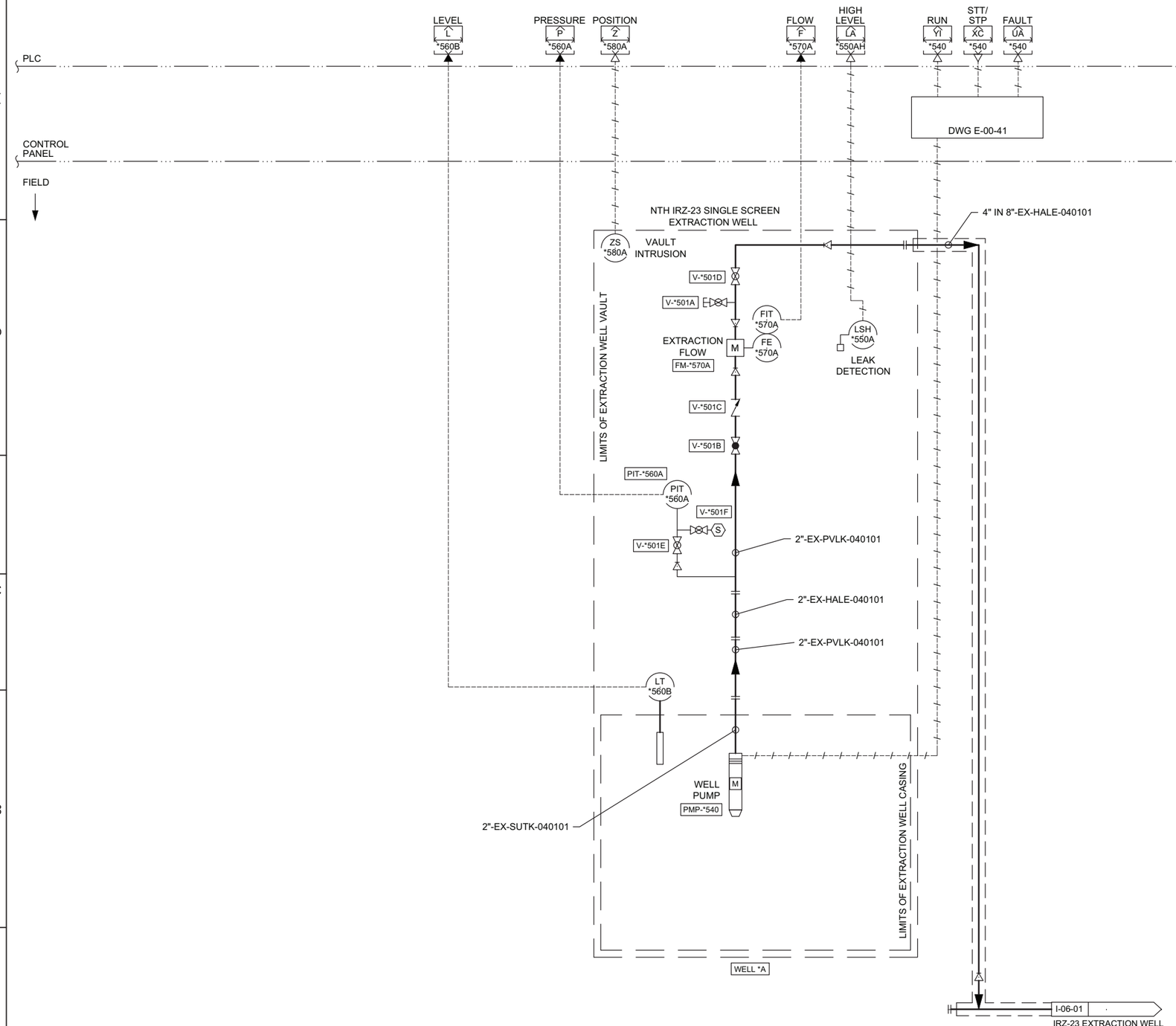

NOTES

1. TAG NUMBER "*" IS A PLACEHOLDER FOR THE STATION SCADA ID. FOR THE IRZ EXTRACTION WELLS THE LOCATION IS "IRZXX-". EXCHANGE "IRZXX-" FOR "*" TO COMPLETE TAG OR INSTRUMENT REFERENCE. REFER TO SHEET I-00-03 FOR A TABLE OF LOCATION IDS.
2. SEE SHEET I-00-03 FOR INTERLOCK TABLE.
3. CONTRACTOR TO PLACE CLEANOUTS, LOW POINT DRAINS AND AIR RELIEF VALVES AT LOCATION SHOWN ON CIVIL SHEETS.
4. SIMILAR FOR EACH INTERVAL.

- DRAFT -
NOT FOR CONSTRUCTION

ARCADIS

NO.	DATE	DESCRIPTION	GM/SPEC	DWN	CHKD	SUPV	APVD	BY
1	09/08/14	PRE-FINAL (90%) DESIGN		MS	MWM	JPB	JEF	
0	04/05/13	INTERMEDIATE (60%) DESIGN		MS	MWM	JPB	JEF	

REVISIONS

APPROVED BY: JEF

SO	
SUPV	JPB
DSGN	MWM
DWN	MS
CHKD	JPB
OK	JEF
DATE	09/08/14
SCALES	NONE

TOPOCK GROUNDWATER REMEDIATION PROJECT

IRZ SINGLE SCREEN EXTRACTION WELLS P&ID

GAS TRANSMISSION & DISTRIBUTION
PACIFIC GAS AND ELECTRIC COMPANY
SAN FRANCISCO, CALIFORNIA

MICROFILM
BILL OF MATL
DWG LIST
SUPSDS
SUPSD BY
SHEET NO. of SHEETS: I-04-01
REV 1

08/27/2014, 10:59, G:\Graphics\ART\TOPOCK\01\Post 90%\I-04-01.dwg, Tab: I-04-01

N1808

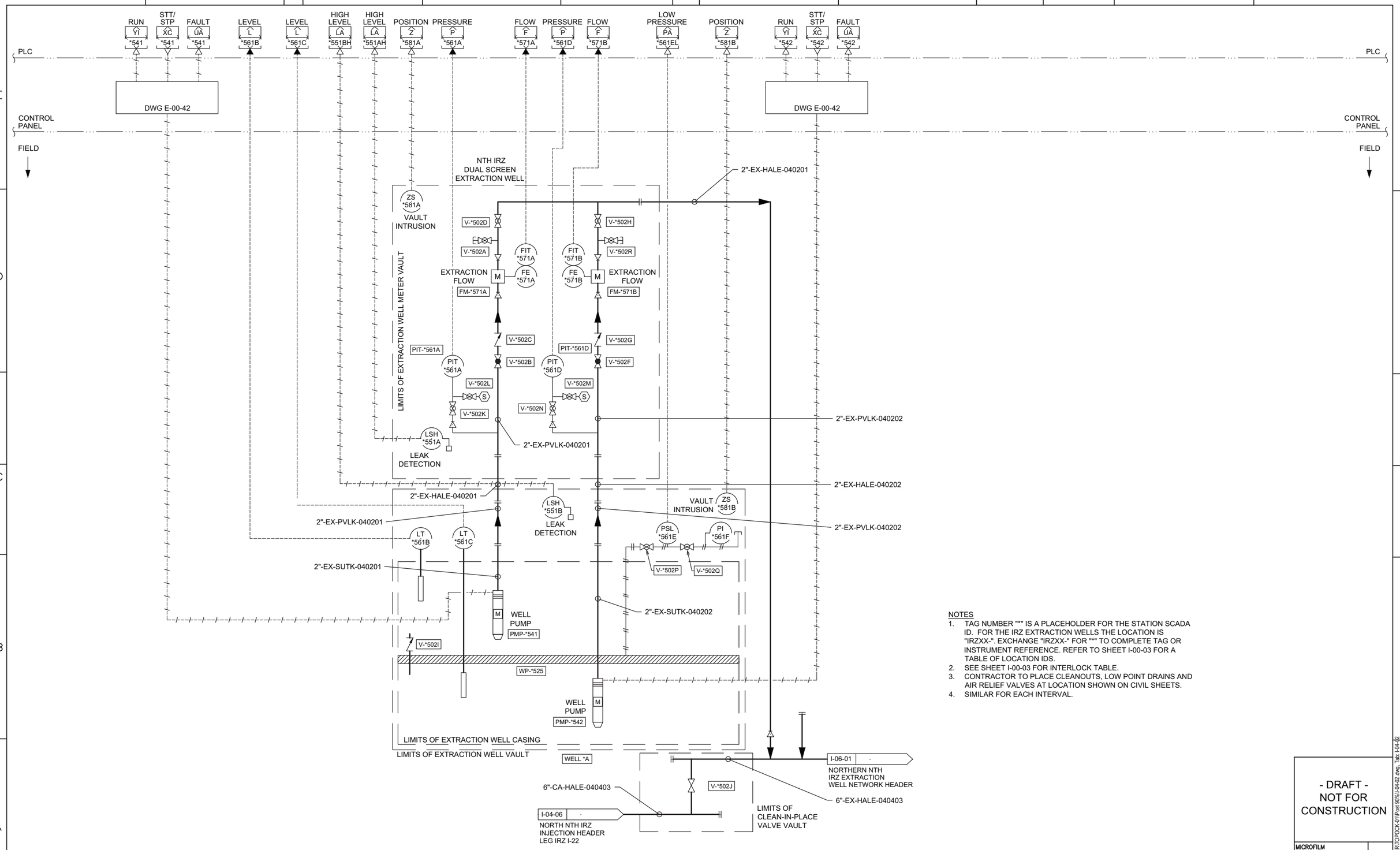

NOTES

1. TAG NUMBER "*" IS A PLACEHOLDER FOR THE STATION SCADA ID. FOR THE IRZ EXTRACTION WELLS THE LOCATION IS "IRZXX-". EXCHANGE "IRZXX-" FOR "*" TO COMPLETE TAG OR INSTRUMENT REFERENCE. REFER TO SHEET I-00-03 FOR A TABLE OF LOCATION IDS.
2. SEE SHEET I-00-03 FOR INTERLOCK TABLE.
3. CONTRACTOR TO PLACE CLEANOUTS, LOW POINT DRAINS AND AIR RELIEF VALVES AT LOCATION SHOWN ON CIVIL SHEETS.
4. SIMILAR FOR EACH INTERVAL.

- DRAFT -
NOT FOR CONSTRUCTION

ARCADIS

NO.	DATE	DESCRIPTION	GM/SPEC	DWN	CHKD	SUPV	APVD BY
1	09/08/14	PRE-FINAL (90%) DESIGN		MS	MWM	JPB	JEF
0	04/05/13	INTERMEDIATE (60%) DESIGN		MS	MWM	JPB	JEF

REVISIONS

APPROVED BY: JEF

SO
SUPV JPB
DSGN MWM
DWN MS
CHKD JPB
OK JEF
DATE 09/08/14
SCALES NONE

TOPOCK GROUNDWATER REMEDIATION PROJECT

IRZ DUAL SCREEN EXTRACTION WELLS P&ID

GAS TRANSMISSION & DISTRIBUTION
PACIFIC GAS AND ELECTRIC COMPANY
SAN FRANCISCO, CALIFORNIA

MICROFILM
BILL OF MATL
DWG LIST
SUPSDS
SUPSD BY
SHEET NO. of SHEETS
I-04-02
REV 1

N1806

08/27/2014, 11:00, G:\Graphics\ARI\TOPOCK-01\Post 90%\I-04-02.dwg, Tab: I-04-02

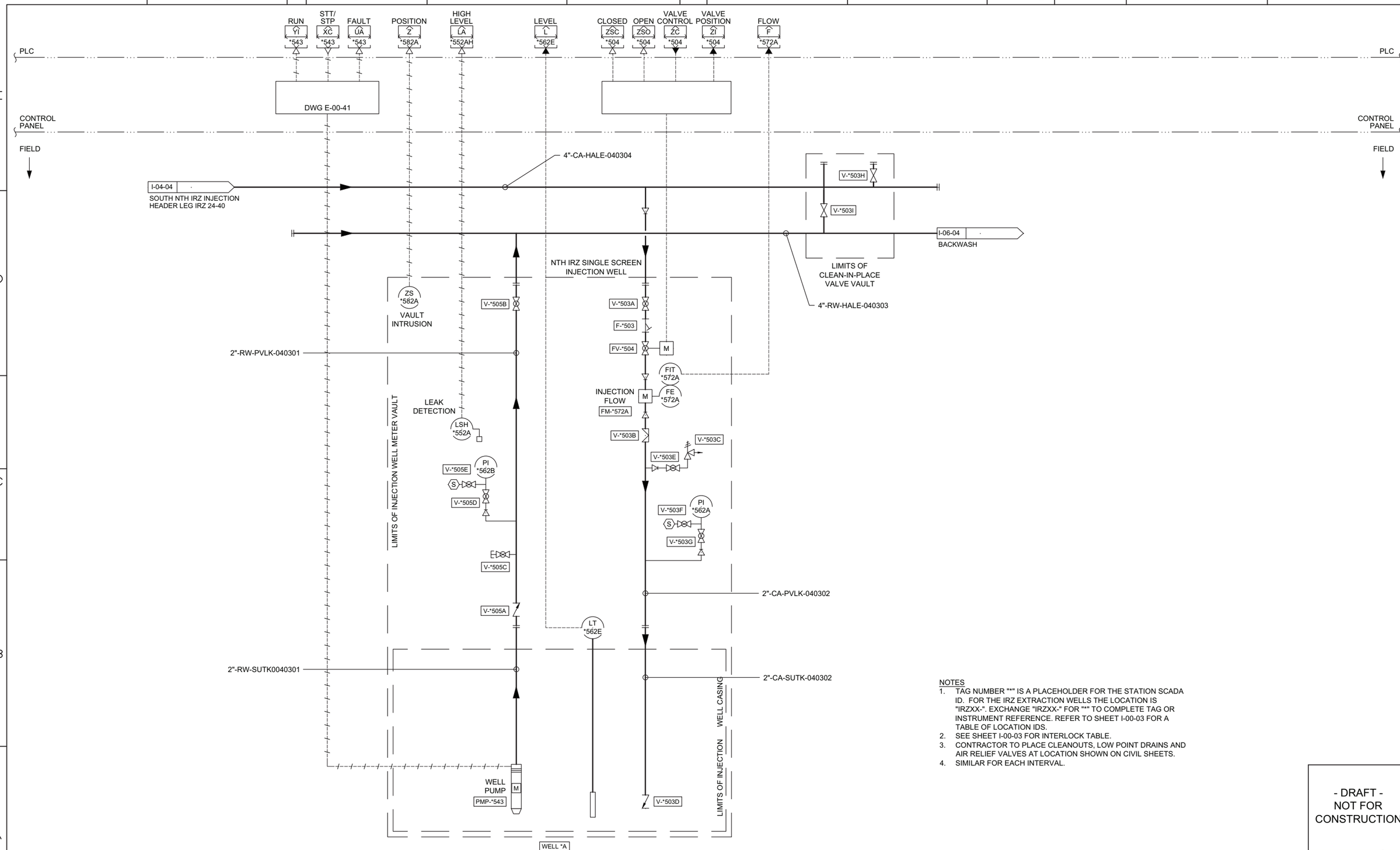

NOTES

1. TAG NUMBER "*" IS A PLACEHOLDER FOR THE STATION SCADA ID. FOR THE IRZ EXTRACTION WELLS THE LOCATION IS "IRZXX-". EXCHANGE "IRZXX-" FOR "*" TO COMPLETE TAG OR INSTRUMENT REFERENCE. REFER TO SHEET I-00-03 FOR A TABLE OF LOCATION IDS.
2. SEE SHEET I-00-03 FOR INTERLOCK TABLE.
3. CONTRACTOR TO PLACE CLEANOUTS, LOW POINT DRAINS AND AIR RELIEF VALVES AT LOCATION SHOWN ON CIVIL SHEETS.
4. SIMILAR FOR EACH INTERVAL.

- DRAFT -
NOT FOR CONSTRUCTION

ARCADIS

NO.	DATE	DESCRIPTION	GM/SPEC	DWN	CHKD	SUPV	APVD BY
1	09/08/14	PRE-FINAL (90%) DESIGN		MS	MWM	JPB	JEF
0	04/05/13	INTERMEDIATE (60%) DESIGN		MS	MWM	JPB	JEF

REVISIONS

APPROVED BY: JEF

SO	
SUPV	JPB
DSGN	MWM
DWN	MS
CHKD	JPB
OK	JEF
DATE	09/08/14
SCALES	NONE

TOPOCK GROUNDWATER REMEDIATION PROJECT

IRZ SINGLE SCREEN INJECTION WELLS P&ID

GAS TRANSMISSION & DISTRIBUTION

PACIFIC GAS AND ELECTRIC COMPANY
SAN FRANCISCO, CALIFORNIA

MICROFILM
BILL OF MATL
DWG LIST
SUPSDS
SUPSD BY
SHEET NO. of SHEETS

I-04-03 | REV 1

08/27/2014, 11:00, G:\Graphics\ARI\TOPOCK-01\Post 90%\I-04-03.dwg, Tab: I-04-03

N1808

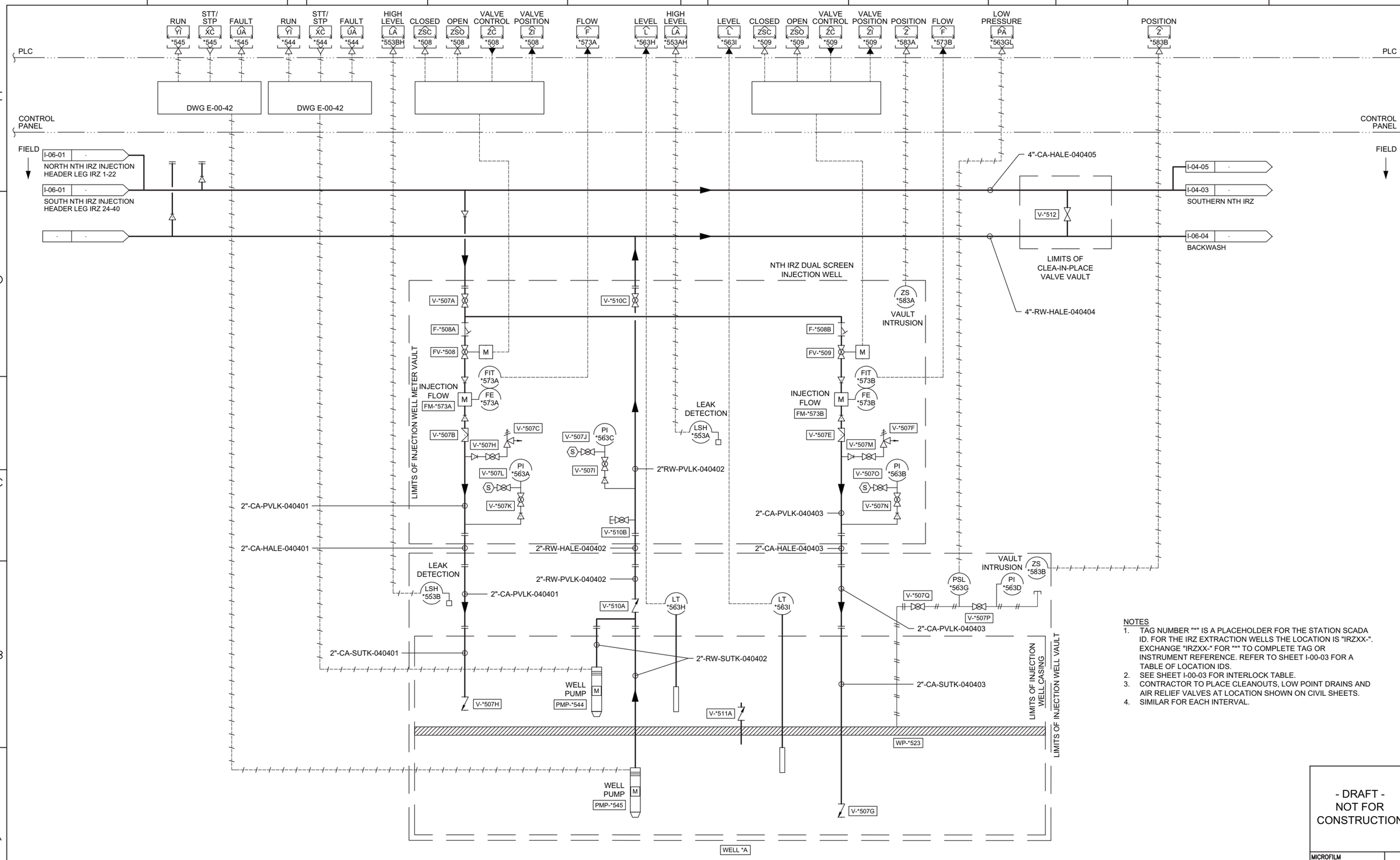

NOTES

1. TAG NUMBER "*" IS A PLACEHOLDER FOR THE STATION SCADA ID. FOR THE IRZ EXTRACTION WELLS THE LOCATION IS "IRZXX-". EXCHANGE "IRZXX-" FOR "*" TO COMPLETE TAG OR INSTRUMENT REFERENCE. REFER TO SHEET I-00-03 FOR A TABLE OF LOCATION IDS.
2. SEE SHEET I-00-03 FOR INTERLOCK TABLE.
3. CONTRACTOR TO PLACE CLEANOUTS, LOW POINT DRAINS AND AIR RELIEF VALVES AT LOCATION SHOWN ON CIVIL SHEETS.
4. SIMILAR FOR EACH INTERVAL.

- DRAFT -
NOT FOR CONSTRUCTION

ARCADIS

NO.	DATE	DESCRIPTION	GM/SPEC	DWN	CHKD	SUPV	APVD BY
1	09/08/14	PRE-FINAL (90%) DESIGN		MS	MWM	JPB	JEF
0	04/05/13	INTERMEDIATE (60%) DESIGN		MS	MWM	JPB	JEF

REVISIONS

APPROVED BY: JEF

SO	
SUPV	JPB
DSGN	MWM
DWN	MS
CHKD	JPB
OK	JEF
DATE	09/08/14
SCALES	NONE

TOPOCK GROUNDWATER REMEDIATION PROJECT

IRZ DUAL SCREEN INJECTION WELLS P&ID

GAS TRANSMISSION & DISTRIBUTION
PACIFIC GAS AND ELECTRIC COMPANY
SAN FRANCISCO, CALIFORNIA

MICROFILM
BILL OF MATL
DWG LIST
SUPSDS
SUPSD BY
SHEET NO. of SHEETS
I-04-04
REV 1

09/27/2014, 11:00, G:\Graphics\ARI\TOPOCK-01\Post 90%\I-04-04.dwg, Tab: I-04-44

N1808

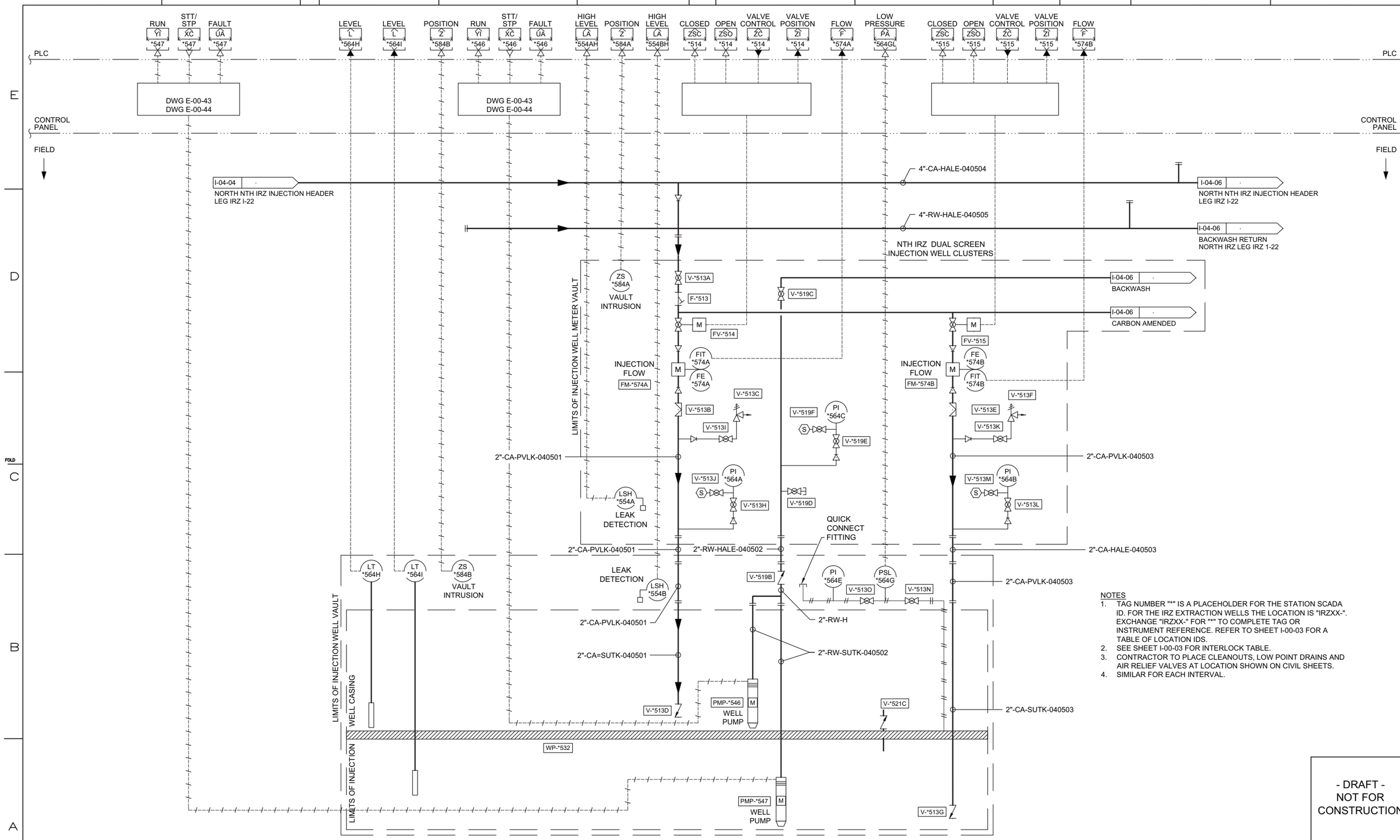

NOTES

1. TAG NUMBER "*" IS A PLACEHOLDER FOR THE STATION SCADA ID. FOR THE IRZ EXTRACTION WELLS THE LOCATION IS "IRZXX-". EXCHANGE "IRZXX-" FOR "*" TO COMPLETE TAG OR INSTRUMENT REFERENCE. REFER TO SHEET I-00-03 FOR A TABLE OF LOCATION IDS.
2. SEE SHEET I-00-03 FOR INTERLOCK TABLE.
3. CONTRACTOR TO PLACE CLEANOUTS, LOW POINT DRAINS AND AIR RELIEF VALVES AT LOCATION SHOWN ON CIVIL SHEETS.
4. SIMILAR FOR EACH INTERVAL.

- DRAFT - NOT FOR CONSTRUCTION

ARCADIS

NO.	DATE	DESCRIPTION	GM/SPEC	DWN	CHKD	SUPV	APVD BY
1	09/08/14	PRE-FINAL (90%) DESIGN		MS	MWM	JPB	JEF
0	04/05/13	INTERMEDIATE (60%) DESIGN		MS	MWM	JPB	JEF

REVISIONS

APPROVED BY: JEF

SO	
SUPV	JPB
DSGN	MWM
DWN	MS
CHKD	JPB
OK	JEF
DATE	09/08/14
SCALES	NONE

TOPOCK GROUNDWATER REMEDIATION PROJECT
IRZ DUAL SCREEN CLUSTER INJECTION WELLS P&ID
SHEET 1 OF 2
GAS TRANSMISSION & DISTRIBUTION
PACIFIC GAS AND ELECTRIC COMPANY
SAN FRANCISCO, CALIFORNIA

MICROFILM
BILL OF MATL
DWG LIST
SUPSDS
SUPSD BY
SHEET NO. of SHEETS: I-04-05
REV: 1

08/27/2014, 11:00, G:\Graphics\AR\TOPOCK-01\Post 90%\I-04-05.dwg, Tab: I-04-05

N1808

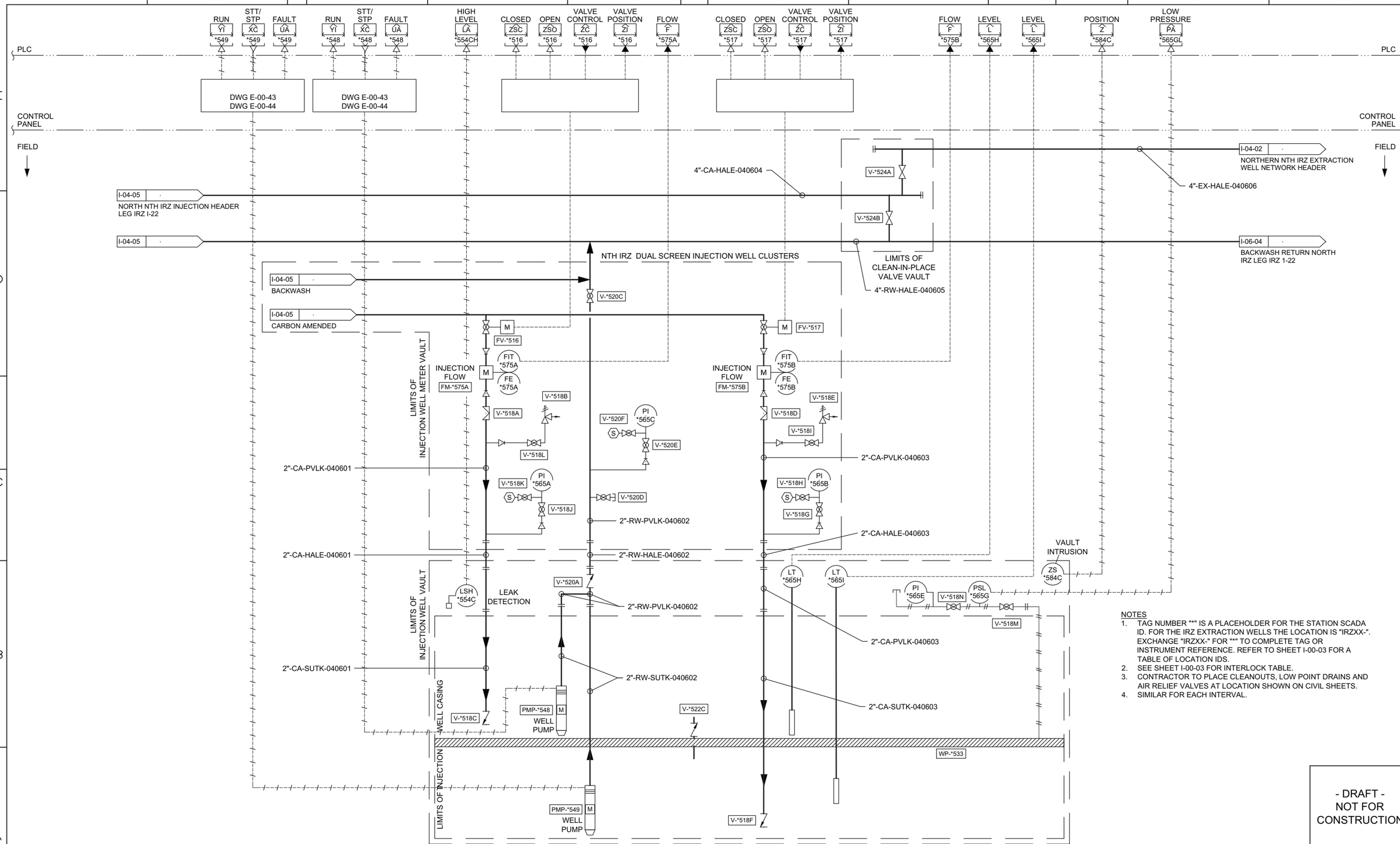

NOTES

1. TAG NUMBER "*" IS A PLACEHOLDER FOR THE STATION SCADA ID. FOR THE IRZ EXTRACTION WELLS THE LOCATION IS "IRZXX-". EXCHANGE "IRZXX-" FOR "*" TO COMPLETE TAG OR INSTRUMENT REFERENCE. REFER TO SHEET I-00-03 FOR A TABLE OF LOCATION IDS.
2. SEE SHEET I-00-03 FOR INTERLOCK TABLE.
3. CONTRACTOR TO PLACE CLEANOUTS, LOW POINT DRAINS AND AIR RELIEF VALVES AT LOCATION SHOWN ON CIVIL SHEETS.
4. SIMILAR FOR EACH INTERVAL.

- DRAFT -
NOT FOR CONSTRUCTION

ARCADIS

NO.	DATE	DESCRIPTION	GM/SPEC	DWN	CHKD	SUPV	APVD	BY
1	09/08/14	PRE-FINAL (90%) DESIGN		MS	MWM	JPB	JEF	
0	04/05/13	INTERMEDIATE (60%) DESIGN		MS	MWM	JPB	JEF	

REVISIONS

APPROVED BY: JEF

SO	
SUPV	JPB
DSGN	MWM
DWN	MS
CHKD	JPB
OK	JEF
DATE	09/08/14
SCALES	NONE

TOPOCK GROUNDWATER REMEDIATION PROJECT
IRZ DUAL SCREEN CLUSTER INJECTION WELLS P&ID
SHEET 2 OF 2
GAS TRANSMISSION & DISTRIBUTION
PACIFIC GAS AND ELECTRIC COMPANY
SAN FRANCISCO, CALIFORNIA

MICROFILM
BILL OF MATL
DWG LIST
SUPSDS
SUPSD BY
SHEET NO. of SHEETS: I-04-06
REV 1

08/27/2014, 11:01, G:\Graphics\ART\TOPOCK\401\Post 90%\I-04-06.dwg, Tab: 1-04-06

N1808

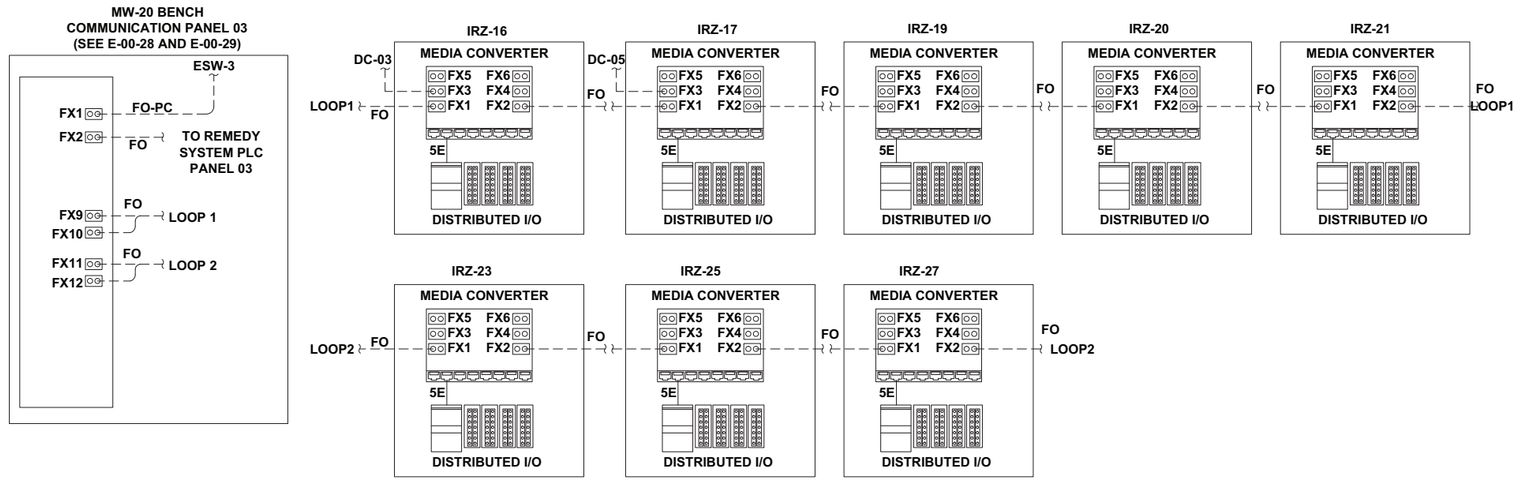

LEGEND

FO	MM FIBER OPTIC CABLE
FO-PC	FIBER OPTIC PATCH CABLE
5E	CAT 5e ETHERNET PATCH CABLE
FOD	FIBER OPTIC DROP
PLC	PROGRAMMABLE LOGIC CONTROLLER
I/O	INPUT/OUTPUT

NOTES:

1. ALL MEDIA CONVERTERS ARE MANAGED ETHERNET MEDIA CONVERTER/SWITCH 8 10/100 BASE TX RJ-45 PORT, 6 100BASE FX, SC. (N-TRON MODEL 114FX6-SC OR 714FX6-SC)

- DRAFT -
NOT FOR
CONSTRUCTION

ARCADIS

NO.	DATE	DESCRIPTION	GM/SPEC	DWN	CHKD	SUPV	APVD BY
1	09/08/14	PRE-FINAL (90%) DESIGN		MS	MWM	JPB	JEF
0	04/05/13	INTERMEDIATE (60%) DESIGN		MS	MWM	JPB	JEF

REVISIONS

APPROVED BY: JEF

SO	
SUPV	JPB
DSGN	MWM
DWN	MS
CHKD	JPB
OK	JEF
DATE	09/08/14
SCALES	NONE

TOPOCK GROUNDWATER REMEDIATION PROJECT

NODE 03
FIBER OPTIC NETWORK

GAS TRANSMISSION & DISTRIBUTION
PACIFIC GAS AND ELECTRIC COMPANY
SAN FRANCISCO, CALIFORNIA

MICROFILM
BILL OF MATL
DWG LIST
SUPSDS
SUPSD BY
SHEET NO. of SHEETS
I-04-07
REV 1

08/27/2014, 10:46, G:\Graphics\AR\TOPOCK-01\Post 90%\Controls\I).dwg, Tab: 4-7

N1808

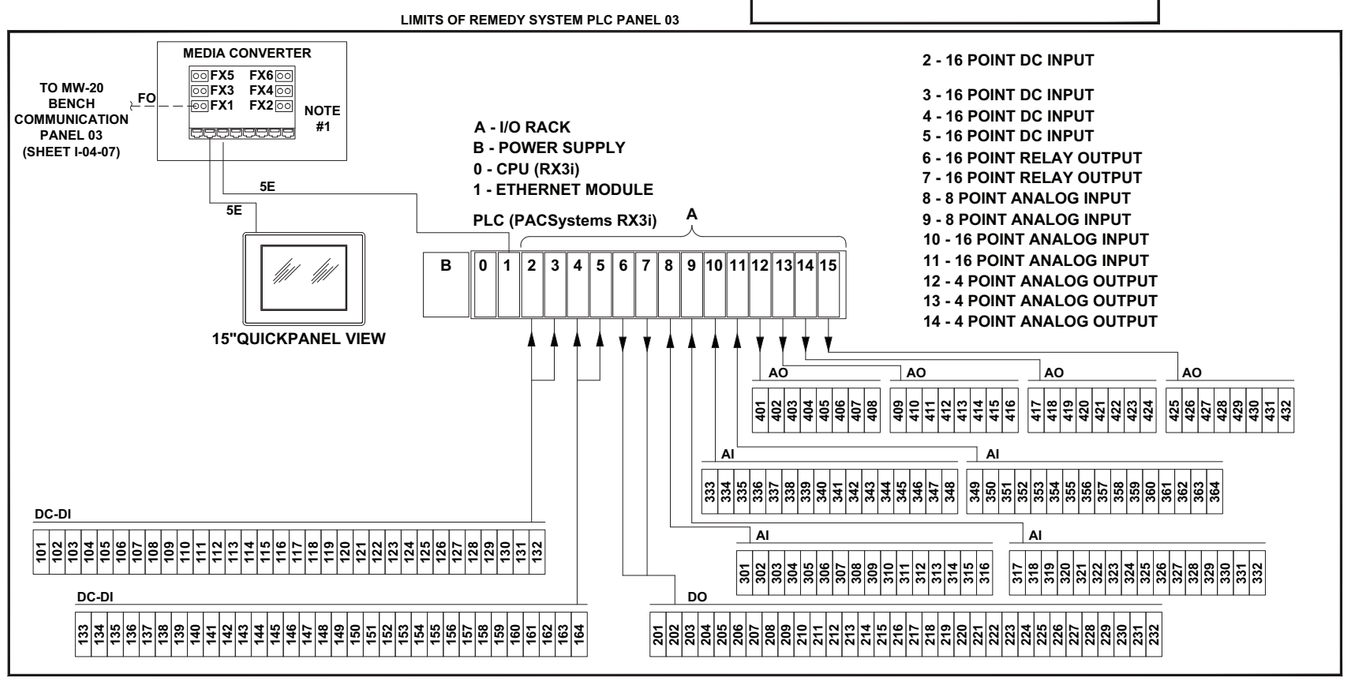

LEGEND

AC	ALTERNATING CURRENT
DC	DIRECT CURRENT
DC-DI	DC DISCRETE INPUT
DO	DISCRETE OUTPUT
AI	ANALOG INPUT
AO	ANALOG OUTPUT
PLC	PROGRAMMABLE LOGIC CONTROLLER
FOD	FIBER OPTIC DROP
I/O	INPUT/OUTPUT
MCP	MAIN CONTROL PANEL
FO	MM FIBER OPTIC CABLE
FO-PC	FIBER OPTIC PATCH CABLE
5E	CAT 5e ETHERNET PATCH CABLE

NOTES:

1. ALL MEDIA CONVERTERS ARE MANAGED ETHERNET MEDIA CONVERTER/SWITCH 8 10/100 BASE TX RJ-45 PORT, 6 100BASE FX, SC. (N-TRON MODEL 114FX6-SC OR 714FX6-SC)

- DRAFT -
NOT FOR
CONSTRUCTION

ARCADIS

NO.	DATE	DESCRIPTION	GM/SPEC	DWN	CHKD	SUPV	APVD BY
1	09/08/14	PRE-FINAL (90%) DESIGN		MS	MWM	JPB	JEF
0	04/05/13	INTERMEDIATE (60%) DESIGN		MS	MWM	JPB	JEF

REVISIONS

APPROVED BY: JEF

SO
SUPV JPB
DSGN MWM
DWN MS
CHKD JPB
OK JEF
DATE 09/08/14
SCALES NONE

TOPOCK GROUNDWATER REMEDIATION PROJECT
NODE 03 PLC PANELS
INSTRUMENTATION CONNECTION
SHEET 1 OF 4
GAS TRANSMISSION & DISTRIBUTION
PACIFIC GAS AND ELECTRIC COMPANY
SAN FRANCISCO, CALIFORNIA

MICROFILM
BILL OF MATL
DWG LIST
SUPSDS
SUPSD BY
SHEET NO. of SHEETS
I-04-08
REV 1

N1808

08/27/2014, 10:47, G:\Graphics\ARI\TOPOCK-01\Post 90%\Controls\I).dwg, Tab: 4-8

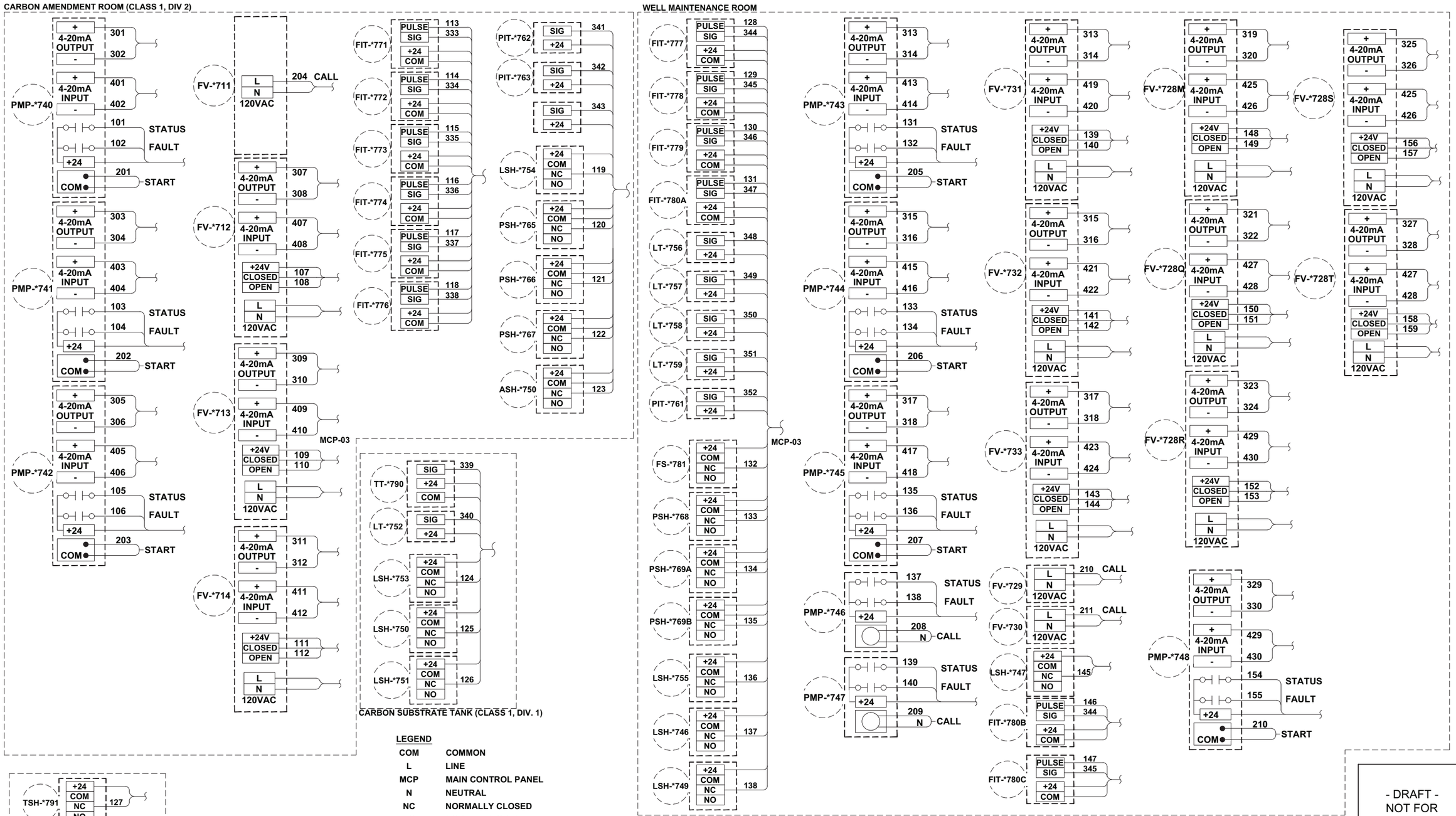

LEGEND

COM	COMMON
L	LINE
MCP	MAIN CONTROL PANEL
N	NEUTRAL
NC	NORMALLY CLOSED
NO	NORMALLY OPEN
PWR	POWER
SIG	SIGNAL

NOTES:
1. ALL CONDUITS ENTERING AND EXITING CLASSIFIED AREAS MUST BE INSTALLED IN ACCORDANCE WITH CLASS 1, DIV. 1 REQUIREMENTS.

- DRAFT -
NOT FOR CONSTRUCTION

ARCADIS

NO.	DATE	DESCRIPTION	GM/SPEC	DWN	CHKD	SUPV	APVD BY
1	09/08/14	PRE-FINAL (90%) DESIGN	MS	MWM	JPB	JEF	
0	04/05/13	INTERMEDIATE (60%) DESIGN	MS	MWM	JPB	JEF	

REVISIONS

APPROVED BY: JEF

SO	
SUPV	JPB
DSGN	MWM
DWN	MS
CHKD	JPB
OK	JEF
DATE	09/08/14
SCALES	NONE

TOPOCK GROUNDWATER REMEDIATION PROJECT
NODE 03 PLC PANELS INSTRUMENTATION CONNECTION SHEET 2 OF 4
GAS TRANSMISSION & DISTRIBUTION
PACIFIC GAS AND ELECTRIC COMPANY
SAN FRANCISCO, CALIFORNIA

MICROFILM
BILL OF MATL
DWG LIST
SUPSDS
SUPSD BY
SHEET NO. I-04-09 of SHEETS
REV 1

N1808

08/27/2014, 10:47, G:\Graphics\ARI\TOPOCK-01\Post 90%\Controls\I-04.dwg, Tab: 4-09

(TYP. IRZ-16, IRZ-17, IRZ-19, IRZ-20, IRZ-21)

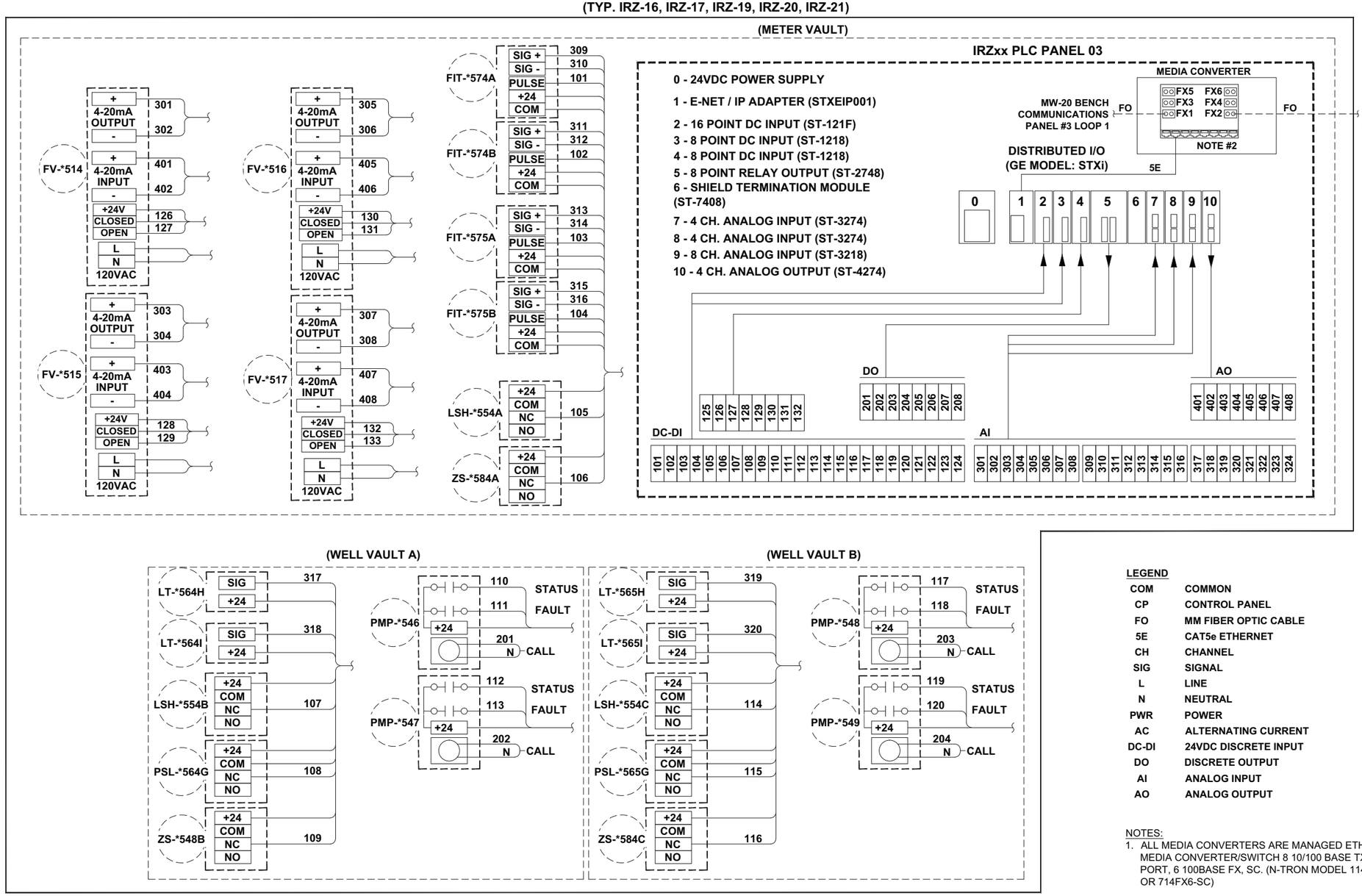

LEGEND

COM	COMMON
CP	CONTROL PANEL
FO	MM FIBER OPTIC CABLE
5E	CAT5e ETHERNET
CH	CHANNEL
SIG	SIGNAL
L	LINE
N	NEUTRAL
PWR	POWER
AC	ALTERNATING CURRENT
DC-DI	24VDC DISCRETE INPUT
DO	DISCRETE OUTPUT
AI	ANALOG INPUT
AO	ANALOG OUTPUT

NOTES:

1. ALL MEDIA CONVERTERS ARE MANAGED ETHERNET MEDIA CONVERTER/SWITCH 8 10/100 BASE TX RJ-45 PORT, 6 100BASE FX, SC. (N-TRON MODEL 114FX6-SC OR 714FX6-SC)

- DRAFT -
NOT FOR
CONSTRUCTION

ARCADIS

NO.	DATE	DESCRIPTION	GM/SPEC	DWN	CHKD	SUPV	APVD BY
1	09/08/14	PRE-FINAL (90%) DESIGN		MS	MWM	JPB	JEF
0	04/05/13	INTERMEDIATE (60%) DESIGN		MS	MWM	JPB	JEF

REVISIONS

APPROVED BY: JEF

SO
SUPV JPB
DSGN MWM
DWN MS
CHKD JPB
OK JEF
DATE 09/08/14
SCALES NONE

TOPOCK GROUNDWATER REMEDIATION PROJECT
NODE 03 PLC PANELS
INSTRUMENTATION CONNECTION
SHEET 3 OF 4
GAS TRANSMISSION & DISTRIBUTION
PACIFIC GAS AND ELECTRIC COMPANY
SAN FRANCISCO, CALIFORNIA

MICROFILM
BILL OF MATL
DWG LIST
SUPSDS
SUPSD BY
SHEET NO. of SHEETS
I-04-10
REV 1

N1808

08/27/2014, 10:47, G:\Graphics\AR\TOPOCK-01\Post 90%\Controls\I).dwg, Tab: 4-10

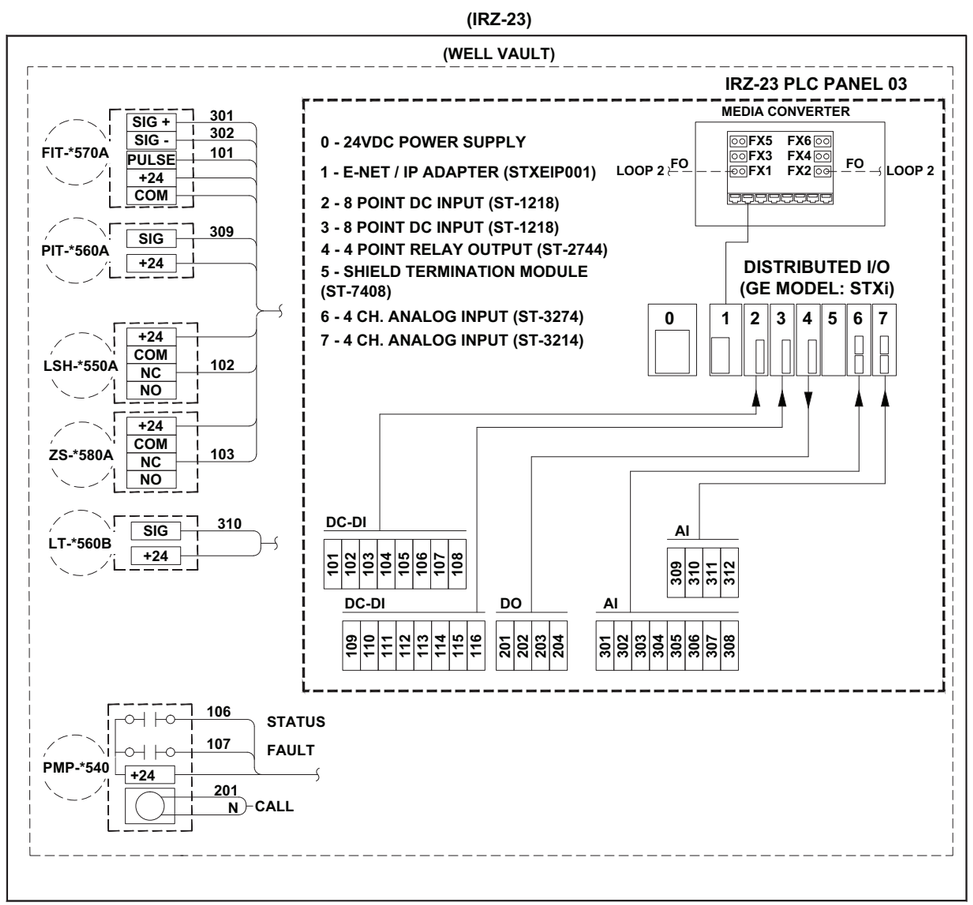

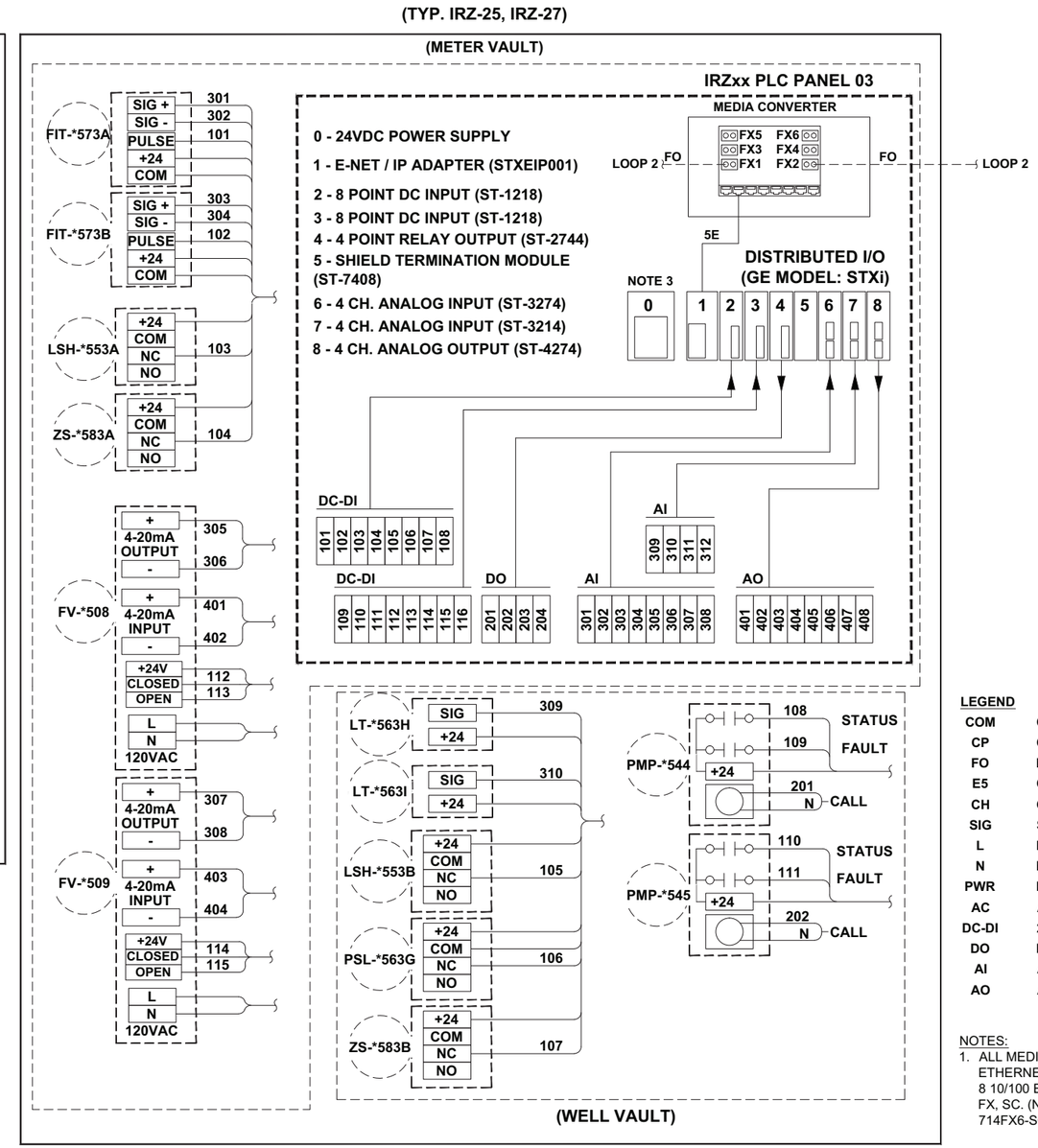

LEGEND

COM	COMMON
CP	CONTROL PANEL
FO	MM FIBER OPTIC CABLE
E5	CAT5e ETHERNET
CH	CHANNEL
SIG	SIGNAL
L	LINE
N	NEUTRAL
PWR	POWER
AC	ALTERNATING CURRENT
DC-DI	24VDC DISCRETE INPUT
DO	DISCRETE OUTPUT
AI	ANALOG INPUT
AO	ANALOG OUTPUT

NOTES:

1. ALL MEDIA CONVERTERS ARE MANAGED ETHERNET MEDIA CONVERTER/SWITCH 8 10/100 BASE TX RJ-45 PORT, 6 100BASE FX, SC. (N-TRON MODEL 114FX6-SC OR 714FX6-SC)

- DRAFT -
NOT FOR
CONSTRUCTION

ARCADIS

NO.	DATE	DESCRIPTION	GM/SPEC	DWN	CHKD	SUPV	APVD BY
1	09/08/14	PRE-FINAL (90%) DESIGN		MS	MWM	JPB	JEF
0	04/05/13	INTERMEDIATE (60%) DESIGN		MS	MWM	JPB	JEF

REVISIONS

APPROVED BY: JEF

SO
SUPV JPB
DSGN MWM
DWN MS
CHKD JPB
OK JEF
DATE 09/08/14
SCALES NONE

TOPOCK GROUNDWATER REMEDIATION PROJECT
NODE 03 PLC PANELS 03
INSTRUMENTATION CONNECTION
SHEET 4 OF 4
GAS TRANSMISSION & DISTRIBUTION
PACIFIC GAS AND ELECTRIC COMPANY
SAN FRANCISCO, CALIFORNIA

MICROFILM
BILL OF MATL
DWG LIST
SUPSDS
SUPSD BY
SHEET NO. of SHEETS
I-04-11
REV 1

N1808

08/27/2014, 10:47, G:\Graphics\ARITOPOCK-01\Post 90%\Controls\I-I.dwg, Tab: 4-11

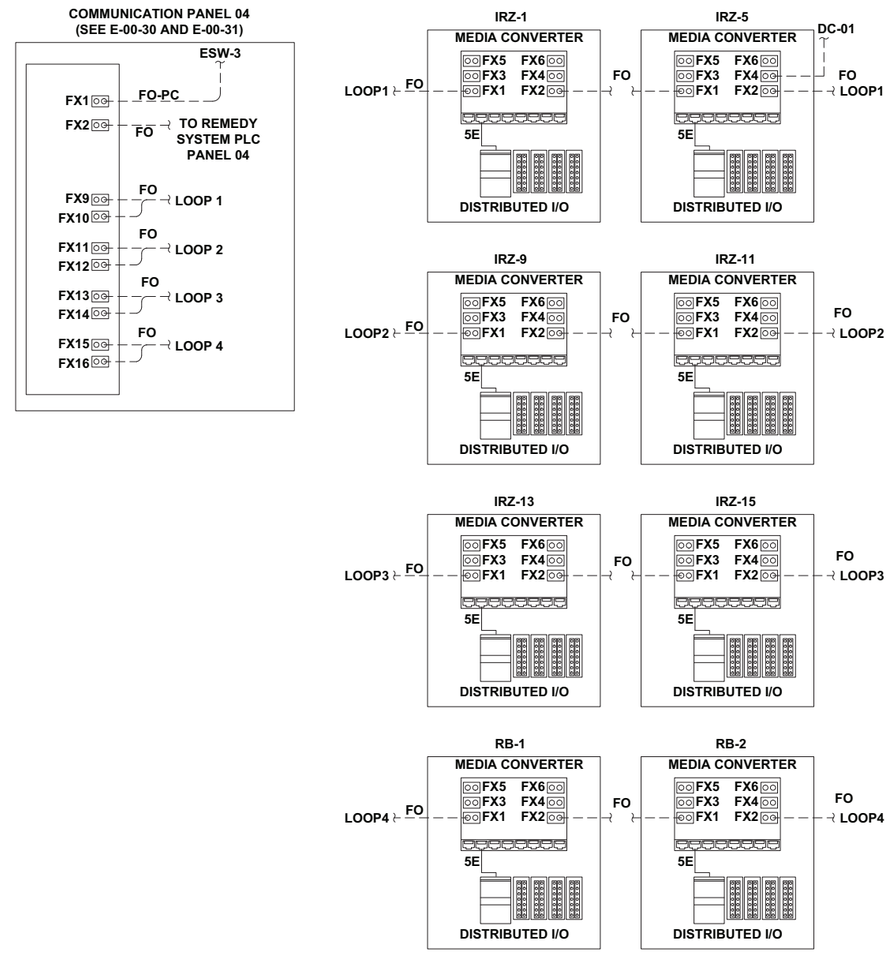

LEGEND

FO	MM FIBER OPTIC CABLE
FO-PC	FIBER OPTIC PATCH CABLE
5E	CAT 5e ETHERNET PATCH CABLE
FOD	FIBER OPTIC DROP
PLC	PROGRAMMABLE LOGIC CONTROLLER
I/O	INPUT/OUTPUT

NOTES:

1. ALL MEDIA CONVERTERS ARE MANAGED ETHERNET MEDIA CONVERTER/SWITCH 8 10/100 BASE TX RJ-45 PORT, 6 100BASE FX, SC. (N-TRON MODEL 114FX6-SC OR 714FX6-SC)

- DRAFT -
NOT FOR CONSTRUCTION

ARCADIS

NO.	DATE	DESCRIPTION	GM/SPEC	DWN	CHKD	SUPV	APVD BY
1	09/08/14	PRE-FINAL (90%) DESIGN		MS	MWM	JPB	JEF
0	04/05/13	INTERMEDIATE (60%) DESIGN		MS	MWM	JPB	JEF

REVISIONS

APPROVED BY: JEF

SO	
SUPV	JPB
DSGN	MWM
DWN	MS
CHKD	JPB
OK	JEF
DATE	09/08/14
SCALES	NONE

TOPOCK GROUNDWATER REMEDIATION PROJECT

NODE 04
FIBER OPTIC NETWORK

GAS TRANSMISSION & DISTRIBUTION
PACIFIC GAS AND ELECTRIC COMPANY
SAN FRANCISCO, CALIFORNIA

MICROFILM
BILL OF MATL
DWG LIST
SUPSDS
SUPSD BY
SHEET NO. of SHEETS: I-04-12
REV: 1

08/27/2014, 10:47, G:\Graphics\ARR\TOPOCK-01\Post 96%\Controls\I).dwg, Tab: 4-12

N1808

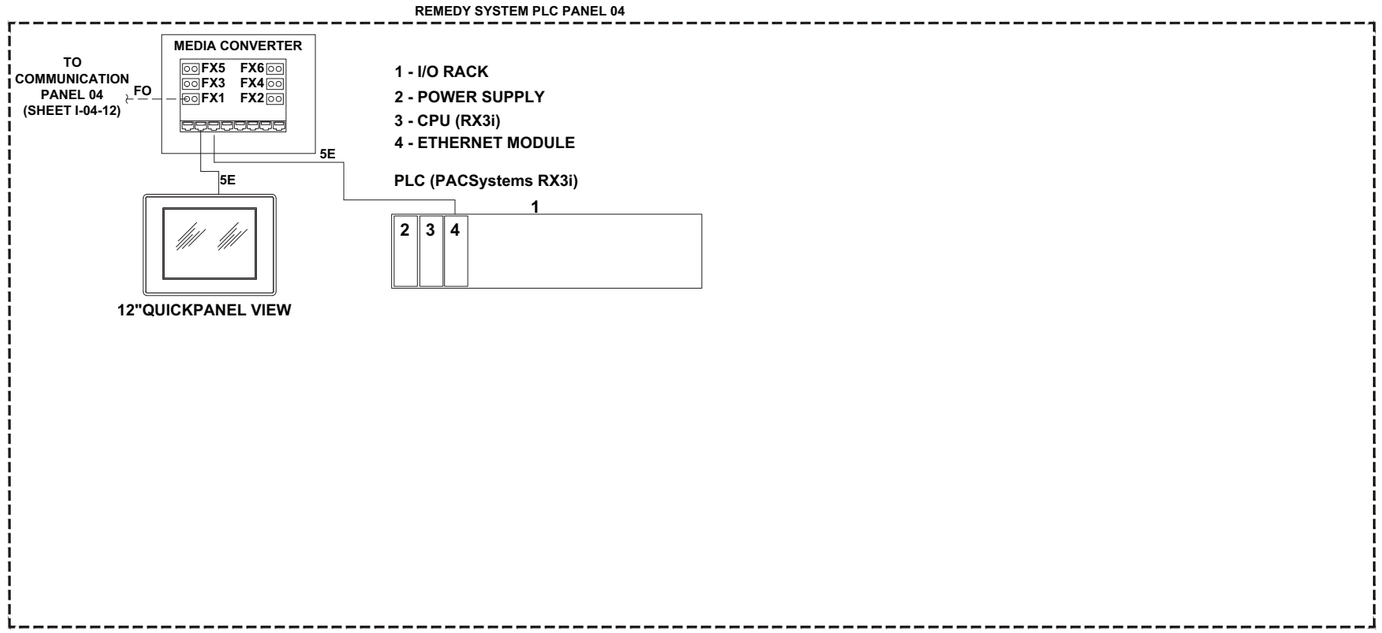

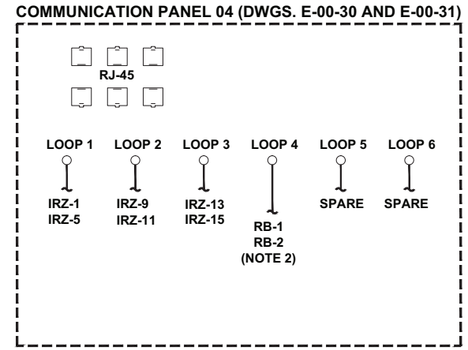

LEGEND

AC	ALTERNATING CURRENT
DC	DIRECT CURRENT
DC-DI	DC DISCRETE INPUT
DO	DISCRETE OUTPUT
AI	ANALOG INPUT
AO	ANALOG OUTPUT
PLC	PROGRAMMABLE LOGIC CONTROLLER
FOD	FIBER OPTIC DROP
I/O	INPUT/OUTPUT
MCP	MAIN CONTROL PANEL
FO	MM FIBER OPTIC CABLE
FO-PC	FIBER OPTIC PATCH CABLE
5E	CAT 5e ETHERNET PATCH CABLE

NOTES:

1. ALL MEDIA CONVERTERS ARE MANAGED ETHERNET MEDIA CONVERTER/SWITCH 8 10/100 BASE TX RJ-45 PORT, 6 100BASE FX, SC. (N-TRON MODEL 114FX6-SC OR 714FX6-SC)

- DRAFT -
NOT FOR
CONSTRUCTION

ARCADIS

NO.	DATE	DESCRIPTION	GM/SPEC	DWN	CHKD	SUPV	APVD BY
1	09/08/14	PRE-FINAL (90%) DESIGN		MS	MWM	JPB	JEF
0	04/05/13	INTERMEDIATE (60%) DESIGN		MS	MWM	JPB	JEF

REVISIONS

APPROVED BY: JEF

SO	
SUPV	JPB
DSGN	MWM
DWN	MS
CHKD	JPB
OK	JEF
DATE	09/08/14
SCALES	NONE

TOPOCK GROUNDWATER REMEDIATION PROJECT

NODE 04 PLC PANELS
INSTRUMENTATION CONNECTION
SHEET 1 OF 3

GAS TRANSMISSION & DISTRIBUTION
PACIFIC GAS AND ELECTRIC COMPANY
SAN FRANCISCO, CALIFORNIA

MICROFILM
BILL OF MATL
DWG LIST
SUPSDS
SUPSD BY
SHEET NO. of SHEETS: I-04-13
REV: 1

08/27/2014, 10:47, G:\Graphics\ART\TOPOCK-01\Post 90%\Controls\I-04-13.dwg, Tab: 4-13

N1808

(TYP. IRZ-11, IRZ-13, IRZ-15 VAULTS)

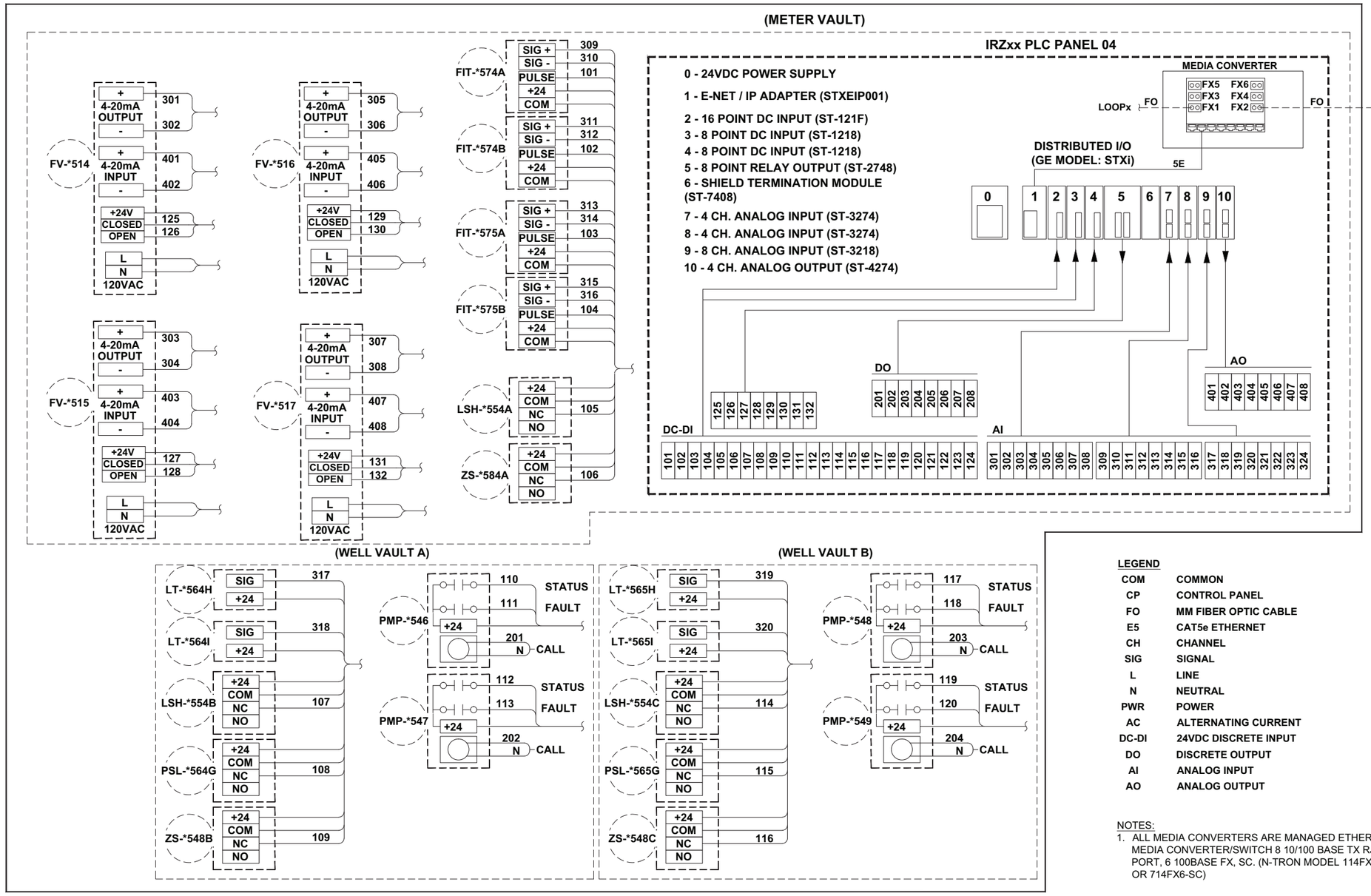

LEGEND

COM	COMMON
CP	CONTROL PANEL
FO	MM FIBER OPTIC CABLE
E5	CAT5e ETHERNET
CH	CHANNEL
SIG	SIGNAL
L	LINE
N	NEUTRAL
PWR	POWER
AC	ALTERNATING CURRENT
DC-DI	24VDC DISCRETE INPUT
DO	DISCRETE OUTPUT
AI	ANALOG INPUT
AO	ANALOG OUTPUT

NOTES:

1. ALL MEDIA CONVERTERS ARE MANAGED ETHERNET MEDIA CONVERTER/SWITCH 8 10/100 BASE TX RJ-45 PORT, 6 100BASE FX, SC. (N-TRON MODEL 114FX6-SC OR 714FX6-SC)

- DRAFT -
NOT FOR
CONSTRUCTION

ARCADIS

NO.	DATE	DESCRIPTION	GM/SPEC	DWN	CHKD	SUPV	APVD BY
1	09/08/14	PRE-FINAL (90%) DESIGN		MS	MWM	JPB	JEF
0	04/05/13	INTERMEDIATE (60%) DESIGN		MS	MWM	JPB	JEF

REVISIONS

APPROVED BY: JEF

SO	
SUPV	JPB
DSGN	MWM
DWN	MS
CHKD	JPB
OK	JEF
DATE	09/08/14
SCALES	NONE

TOPOCK GROUNDWATER REMEDIATION PROJECT

NODE 04 PLC PANELS
INSTRUMENTATION CONNECTION
SHEET 2 OF 3

GAS TRANSMISSION & DISTRIBUTION
PACIFIC GAS AND ELECTRIC COMPANY
SAN FRANCISCO, CALIFORNIA

MICROFILM
BILL OF MATL
DWG LIST
SUPSDS
SUPSD BY
SHEET NO. of SHEETS
I-04-14
REV 1

N1808

08/27/2014, 10:48, G:\Graphics\ARI\TOPOCK-01\Post 90%\Controls(I).dwg, Tab: I-04

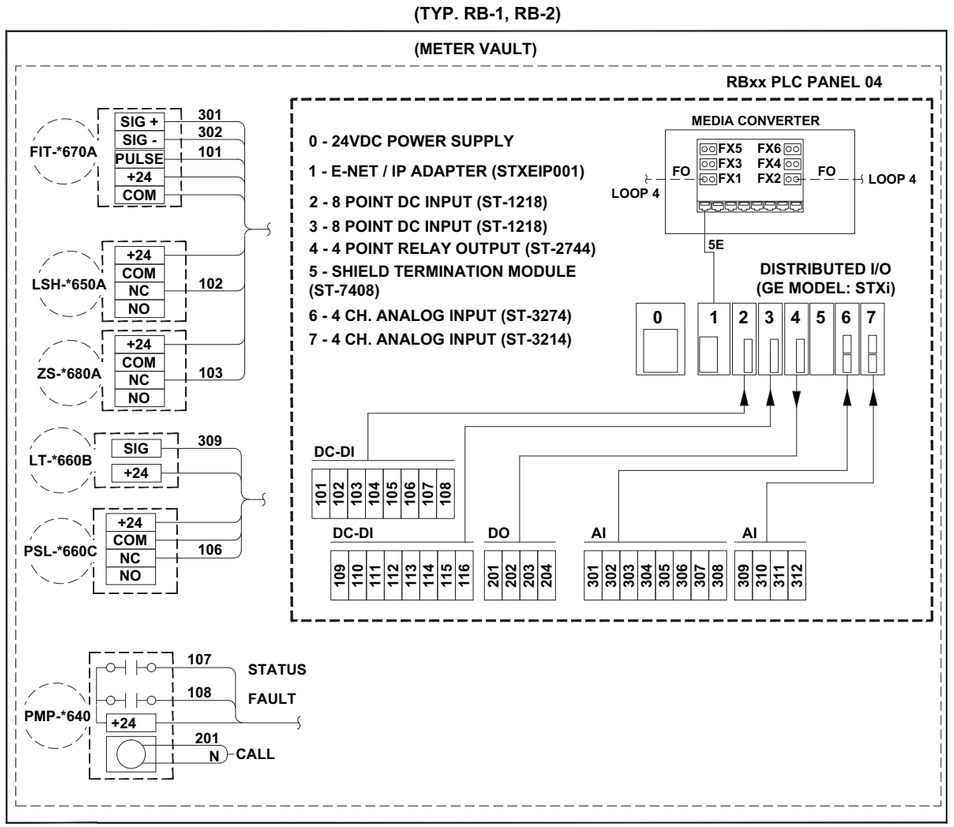

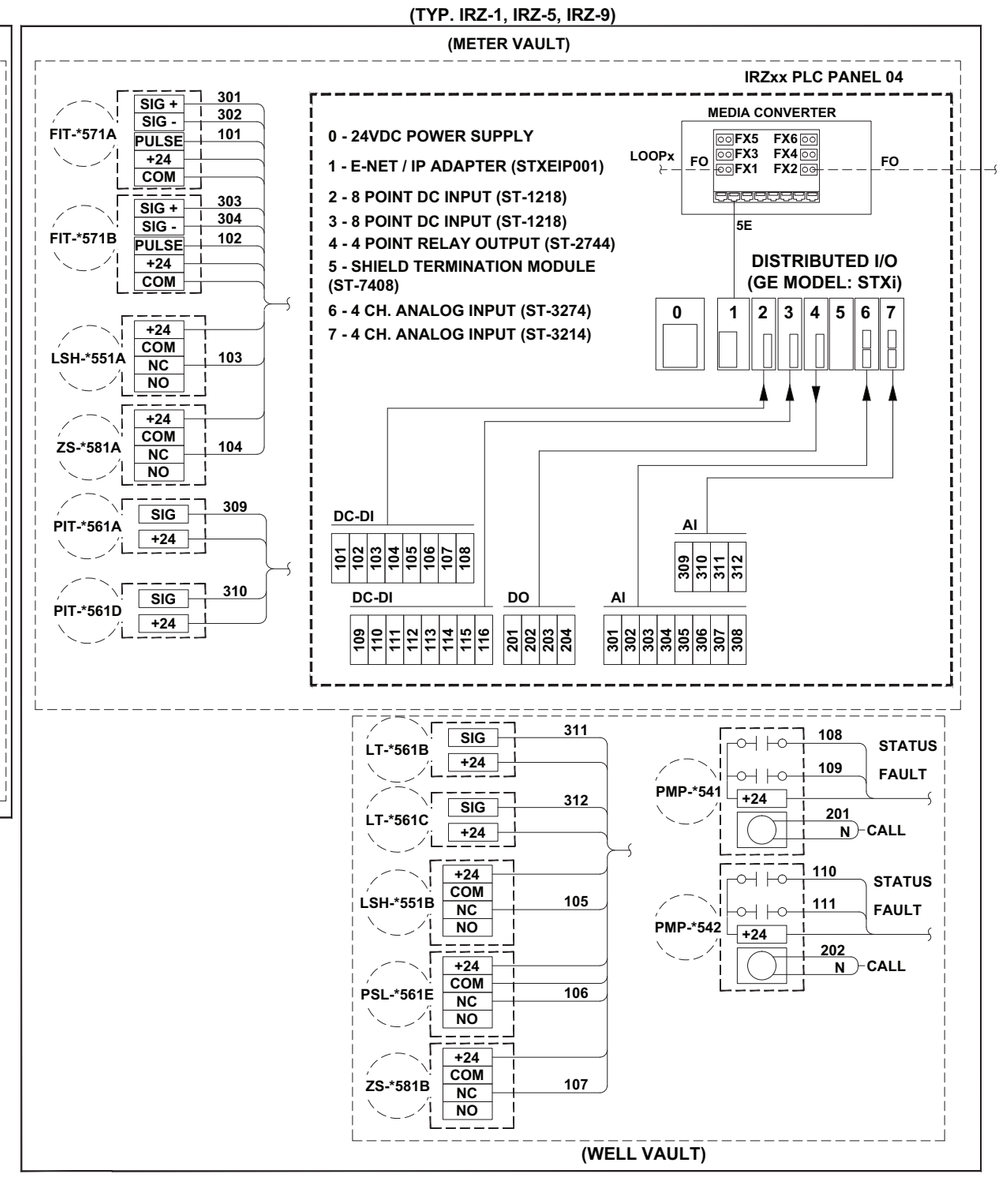

LEGEND

COM	COMMON
CP	CONTROL PANEL
FO	MM FIBER OPTIC CABLE
E5	CAT5e ETHERNET
CH	CHANNEL
SIG	SIGNAL
L	LINE
N	NEUTRAL
PWR	POWER
AC	ALTERNATING CURRENT
DC-DI	24VDC DISCRETE INPUT
DO	DISCRETE OUTPUT
AI	ANALOG INPUT
AO	ANALOG OUTPUT

NOTES:

1. ALL MEDIA CONVERTERS ARE MANAGED ETHERNET MEDIA CONVERTER/SWITCH 8 10/100 BASE TX RJ-45 PORT, 6 100BASE FX, SC. (N-TRON MODEL 114FX6-SC OR 714FX6-SC)

- DRAFT -
NOT FOR
CONSTRUCTION

ARCADIS

NO.	DATE	DESCRIPTION	GM/SPEC	DWN	CHKD	SUPV	APVD	BY
1	09/08/14	PRE-FINAL (90%) DESIGN		MS	MWM	JPB	JEF	
0	04/05/13	INTERMEDIATE (60%) DESIGN		MS	MWM	JPB	JEF	

REVISIONS

APPROVED BY: JEF

SO
SUPV JPB
DSGN MWM
DWN MS
CHKD JPB
OK JEF
DATE 09/08/14
SCALES NONE

TOPOCK GROUNDWATER REMEDIATION PROJECT
NODE 04 PLC PANELS
INSTRUMENTATION CONNECTION
SHEET 3 OF 3
GAS TRANSMISSION & DISTRIBUTION
PACIFIC GAS AND ELECTRIC COMPANY
SAN FRANCISCO, CALIFORNIA

MICROFILM
BILL OF MATL
DWG LIST
SUPSDS
SUPSD BY
SHEET NO. of SHEETS
I-04-15
REV 1

N180B

08/27/2014, 10:48, G:\Graphics\ARITOPOCK-01\Post 90%\Controls\I-04.dwg, Tab: 4-15