Appendix D2
Drawings

- 07 Pipeline
- 08 Transwestern Bench
- 09 Compressor Station Ponds
- 10 TCS Facilities
- 11 Influent Tanks
- 12 Remedy-produced Water Conditioning System
- 13 Freshwater Storage and Contingent Pre-injection Treatment System
- 14 Conditioned Water Tanks
- 15 Moabi Regional Park Facilities
- 16 Monitoring Wells

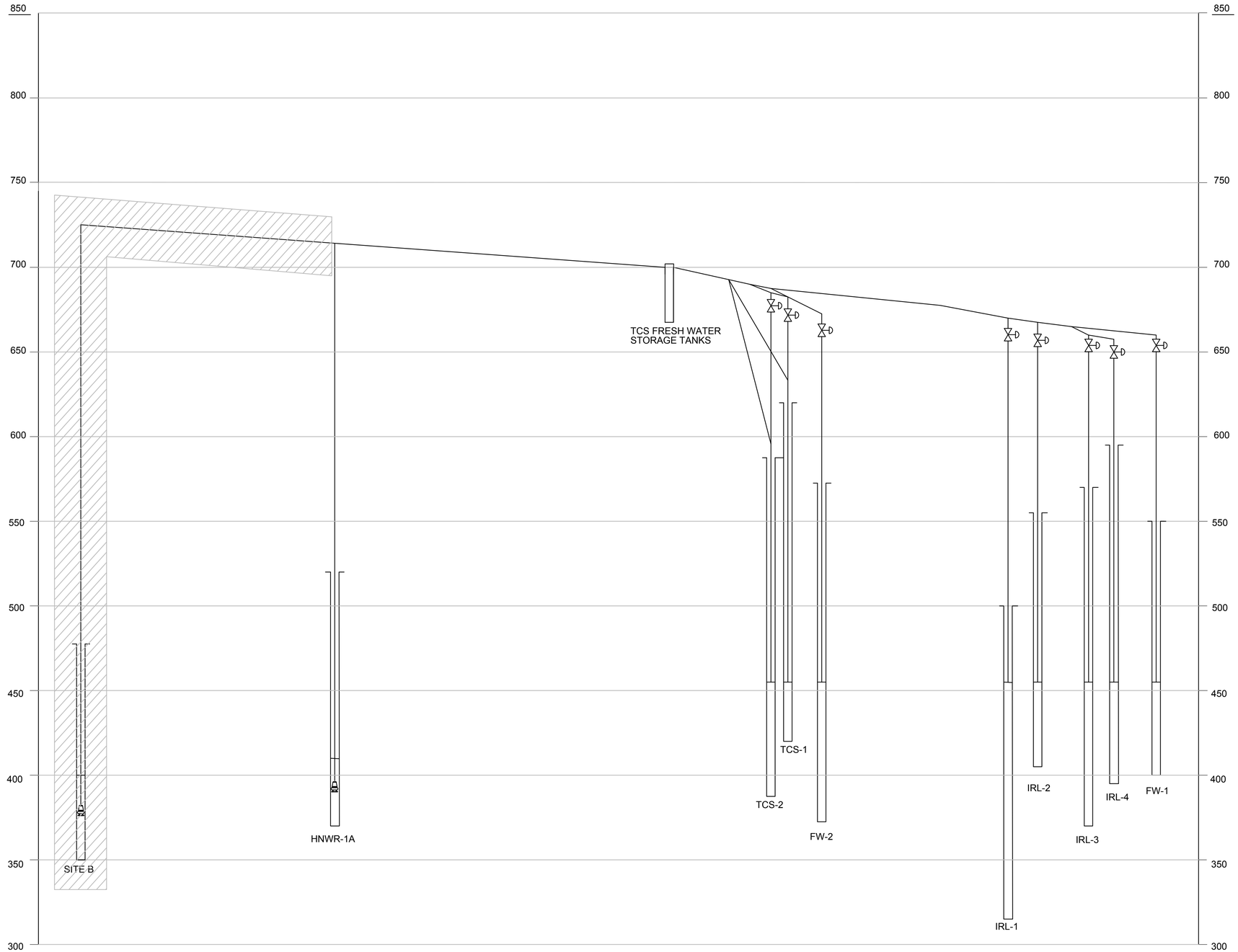

NOTES:

1. SITE B WELL AND PIPELINE FROM SITE B TO HNWR-1A WELL IS CONTINGENT AND MAY BE CONSTRUCTED.
2. HYDRAULIC PROFILE BASED ON CALCULATIONS AND SUBJECT TO CHANGE DEPENDING ON FIELD CONDITIONS.
3. DEPTH OF NEW WELLS ARE APPROXIMATE AND WILL BE DETERMINED DURING CONSTRUCTION.

NOTE:

THE EQUIPMENT AND FACILITY SHOWN HATCHED IS PART OF A CONTINGENT SYSTEM AND MAY BE CONSTRUCTED IN THE FUTURE.

- FINAL DESIGN - FOR AGENCY APPROVAL ONLY

REGISTERED PROFESSIONAL ENGINEER
BENJAMIN J. WUERL
C 67811
EXP 6/30/17
STATE OF CALIFORNIA

ETIC ENGINEERING

ARCADIS

NO.	DATE	DESCRIPTION	GM/SPEC	DWN	CHKD	SUPV	APVD BY
3	11/18/15	FINAL DESIGN		AJW	JPB	BW	RAO
2	9/8/14	PRE-FINAL (90%) DESIGN		PH	PT	VMB	VMB
1	4/5/13	INTERMEDIATE (60%) DESIGN		PC	PC	PT	VMB
0	11/18/11	PRELIMINARY (30%) DESIGN		PC	PC	PT	VMB

REVISIONS

APPROVED BY	
	SO
RAO	SUPV
	DSGN
	DWN
	CHKD
	OK
	DATE
	SCALES

TOPOCK GROUNDWATER REMEDIATION PROJECT

HYDRAULIC PROFILE FRESHWATER INJECTION SYSTEM

GAS TRANSMISSION & DISTRIBUTION
PACIFIC GAS AND ELECTRIC COMPANY
SAN FRANCISCO, CALIFORNIA

MICROFILM	
BILL OF MATL	
DWG LIST	
SUPSDS	
SUPSD BY	
SHEET NO.	of SHEETS
G-07-01	REV 3

N1808

11/17/2015, 10:11, G:\Graphics\AR\TOPOCK-01\Submittal_100%\DWGs\G-General\G-07-01.dwg, Tab: G-07-01

NOTES:
1. HYDRAULIC PROFILE BASED ON CALCULATIONS AND SUBJECT TO CHANGE DEPENDING ON FIELD CONDITIONS.
2. DEPTH OF NEW WELLS ARE APPROXIMATE AND WILL BE DETERMINED DURING CONSTRUCTION.

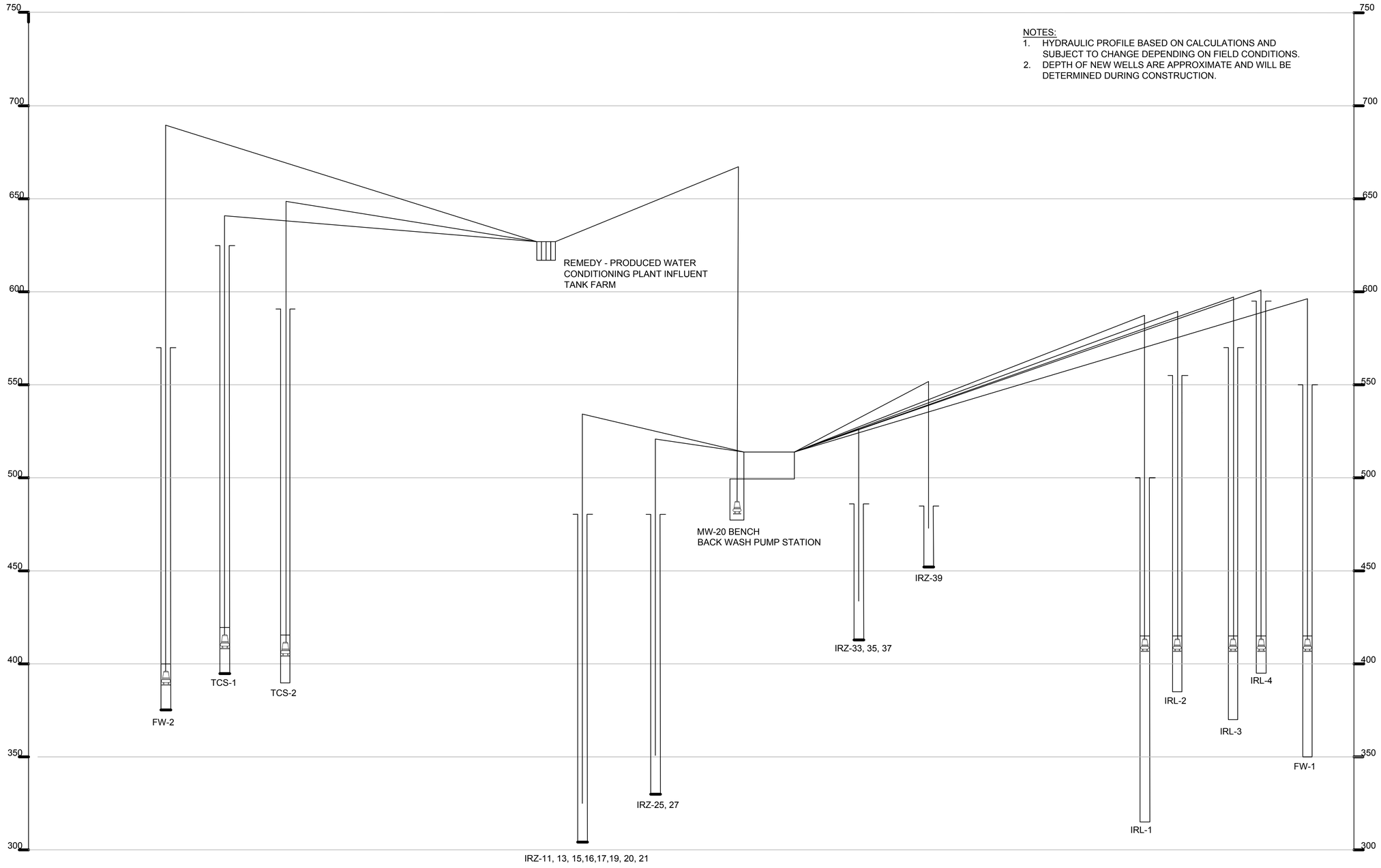

- FINAL DESIGN - FOR AGENCY APPROVAL ONLY

REGISTERED PROFESSIONAL ENGINEER BENJAMIN J. WUERL C 67811 Exp 6/30/14 STATE OF CALIFORNIA

ETIC ENGINEERING

ARCADIS

NO.	DATE	DESCRIPTION	GM/SPEC	DWN	CHKD	SUPV	APVD BY
3	11/18/15	FINAL DESIGN		AJW	JPB	BW	RAO
2	9/8/14	PRE-FINAL (90%) DESIGN		PH	PT	VMB	VMB
1	4/5/13	INTERMEDIATE (60%) DESIGN		PC	PC	PT	VMB
0	11/18/11	PRELIMINARY (30%) DESIGN		PC	PC	PT	VMB

REVISIONS

APPROVED BY	
RAO	SO
	SUPV
	DSGN
	DWN
	CHKD
	OK
	DATE
	SCALES

TOPOCK GROUNDWATER REMEDIATION PROJECT

HYDRAULIC PROFILE REMEDY-PRODUCED WATER SYSTEM

GAS TRANSMISSION & DISTRIBUTION

PACIFIC GAS AND ELECTRIC COMPANY
SAN FRANCISCO, CALIFORNIA

MICROFILM	
BILL OF MATL	
DWG LIST	
SUPSDS	
SUPSD BY	
SHEET NO. of SHEETS	
G-07-02	REV 3

N1808

11/04/2015, 12:19, G:\Graphics\AR\TOPOCK-01\Submittal_100%\DWGs\G-General\G-07-02.dwg, Tab: G-07-02

FOR CONTINUATION SEE INSET BELOW

NATIONAL TRAIL HWY

PIPELINE "C"

PIPELINE "G"

COLORADO RIVER

MOHAVE COUNTY HIGHWAY 10

PIPELINE "B"

PIPELINE "A"

PIPELINE "H"

BNSF RAILROAD

C-07-20 C-07-21 C-07-22 C-07-23 C-07-24 C-07-25 C-07-40 C-07-41 C-07-42 C-07-43 C-07-44 C-07-45 C-07-46 C-07-47 C-07-48 C-07-49 C-07-50 C-07-51 C-07-52 C-07-53 C-07-54 C-07-55 C-07-56 C-07-57 C-07-58 C-07-59 C-07-26 C-07-27 C-07-28 C-07-29 C-07-30 C-07-31 C-07-32 C-07-33 C-07-34

B&J

NATIONAL TRAIL HWY

PIPELINE "E"

PIPELINE "F"

PG& E TOPOCK
COMPRESSOR STATION

PIPELINE "N"

PIPELINE "T"

PIPELINE "M"

PIPELINE "I"

PIPELINE "L"

PIPELINE "K"

PIPELINE "D"

C-07-71 C-07-72 C-07-73 C-07-74 C-07-75 C-07-76 C-07-77 C-07-78 C-07-79 C-07-80 C-07-81 C-07-82 C-07-83 C-07-84 C-07-85 C-07-86 C-07-87 C-07-88 C-07-89

TCS

PIPELINE "B"

ARCH BRIDGE

COLORADO RIVER

PIPELINE "J"

PIPELINE "C-18"

PIPE 300 ACCESS ROAD

TCS MAIN ACCESS ROAD

INSET

MOHAVE COUNTY HIGHWAY 10

PIPELINE "B"

C-07-35 C-07-36 C-07-37

PIPELINE KEY MAP

1" = 300'

0 300 600

SCALE: 1"=300'

LEGEND

ABOVE GROUND PIPE

UNDERGROUND PIPE

BORE AND JACK PIPE

ON EXISTING BRIDGE

PIPELINE "A"
PIPELINE "B"
PIPELINE "C"
PIPELINE "D"
PIPELINE "E"
PIPELINE "F"
PIPELINE "G"
PIPELINE "H"
PIPELINE "I"
PIPELINE "J"
PIPELINE "K"
PIPELINE "L"
PIPELINE "M"
PIPELINE "N"
PIPELINE "T"

- FINAL DESIGN -
FOR AGENCY
APPROVAL ONLY

REGISTERED PROFESSIONAL ENGINEER
BENJAMIN J. WUERL
C 67811
EXP 6/30/17
STATE OF CALIFORNIA

ETIC ENGINEERING

ARCADIS

NO.	DATE	DESCRIPTION	GM/SPEC	DWN	CHKD	SUPV	APVD BY
4	11/18/15	FINAL DESIGN		AJW	WLM	BW	RAO
3	12/30/14	SUPPLEMENTAL PRE-FINAL (90%) DESIGN		MD	VMB	VMB	VMB
2	9/8/14	PRE-FINAL (90%) DESIGN		PH	VMB	VMB	VMB
1	4/5/13	INTERMEDIATE (60%) DESIGN		PH	VMB	VMB	VMB
0	11/11/11	PRELIMINARY (30%) DESIGN		PC	VMB	VMB	VMB

REVISIONS

APPROVED BY	
RAO	SO
	SUPV
	DSGN
	DWN
	CHKD
	OK
	DATE
	SCALES

TOPOCK GROUNDWATER REMEDIATION PROJECT

PIPELINE KEY MAP

GAS TRANSMISSION & DISTRIBUTION
PACIFIC GAS AND ELECTRIC COMPANY
SAN FRANCISCO, CALIFORNIA

MICROFILM	
BILL OF MATL	
DWG LIST	
SUPSDS	
SUPSD BY	
SHEET NO.	of SHEETS
C-07-01	REV 4

N1808

11/03/2015, 10:40, G:\Graphics\ARITOPOCK-01\Submittal_100%\DWGs\C-Civil\C-07-01.dwg, Tab: C-07-01

FOR CONTINUATION SEE INSET BELOW

NATIONAL TRAIL HWY

COLORADO RIVER

MOHAVE COUNTY HIGHWAY 10

BNSF RAILROAD

BNSF RAILROAD

NATIONAL TRAIL HWY

PG&E TOPOCK
COMPRESSOR STATION
APPROX. BOUNDARY

ARCH BRIDGE

COLORADO RIVER

PIPE 300 ACCESS ROAD

TCS MAIN ACCESS ROAD

INSET

PIPELINE SEGMENT MAP

1" = 300'

0 300 600

SCALE: 1"=300'

LEGEND

- ABOVE GROUND PIPE
- UNDERGROUND PIPE
- BORE AND JACK PIPE (B&J)
- ON EXISTING BRIDGE

- PIPELINE "A"
- PIPELINE "B"
- PIPELINE "C"
- PIPELINE "D"
- PIPELINE "E"
- PIPELINE "F"
- PIPELINE "G"
- PIPELINE "H"
- PIPELINE "I"
- PIPELINE "J"
- PIPELINE "K"
- PIPELINE "L"
- PIPELINE "M"
- PIPELINE "N"
- PIPELINE "T"

- FINAL DESIGN -
FOR AGENCY
APPROVAL ONLY

REGISTERED PROFESSIONAL ENGINEER
BENJAMIN J. WUEST
C 67811
EXP 6/30/17
STATE OF CALIFORNIA

ETIC ENGINEERING

ARCADIS

NO.	DATE	DESCRIPTION	GM/SPEC	DWN	CHKD	SUPV	APVD BY
4	11/18/15	FINAL DESIGN		AJW	WLM	BW	RAO
3	12/30/14	SUPPLEMENTAL PRE-FINAL (90%) DESIGN		MD	VMB	VMB	VMB
2	9/8/14	PRE-FINAL (90%) DESIGN		PH	VMB	VMB	VMB
1	4/5/13	INTERMEDIATE (60%) DESIGN		PH	VMB	VMB	VMB
0	11/11/11	PRELIMINARY (30%) DESIGN		PC	VMB	VMB	VMB

REVISIONS

APPROVED BY	SO
RAO	SUPV
	DSGN
	DWN
	CHKD
	OK
	DATE
	SCALES

TOPOCK GROUNDWATER REMEDIATION PROJECT

PIPELINE SEGMENT MAP

GAS TRANSMISSION & DISTRIBUTION
PACIFIC GAS AND ELECTRIC COMPANY
SAN FRANCISCO, CALIFORNIA

MICROFILM	
BILL OF MATL	
DWG LIST	
SUPSDS	
SUPSD BY	
SHEET NO.	of SHEETS
C-07-02	REV 4

N1808

11/02/2015, 14:41, G:\Graphics\ARITOPOCK-01\Submittal_100%\DWGs\C-Civil\C-07-02.dwg, Tab: C-07-02

						Construction Method					Pipe Service (Diameter in inches)																											
Pipe Section No.	Plan and Profile Sht.	Trench Section Sht/Detail	Beg Sta	End Sta	Total Length	UT	CT	AG	BJ	BA	FW	RW	BW	TW	TWB	CA	EX	IRZ	Elect 120V	Elect 480V	Elect 12kV	FO	PROV	Spare	SPARE FO	ACID	CAU	COAG	DR	SL	CW	WS	UA	FPW	SC	IA	PO	TWS	TWC
A1	C-07-20	C-07-100	12+50	18+61	661	611					6	6								2		2		6	2													
A2	C-07-20	C-07-100	18+61	20+44	183		183				6	6								2		2			2													
A8	C-07-20,21	C-07-102	20+44	21+43	99		99				6	6				6				2,2		4,2,2			2													
A3	C-07-21	C-07-100	21+43	23+06	163		163				10	6				6				2,2,2,2		4,2,2			2													
A4	C-07-21	C-07-100	23+06	26+91	385		385				10	6				6				2	4 (Encased)	4,2			2													
A5	C-07-21	C-07-100	26+91	28+56	165	165					8,8	6				6				2	4 (Encased)	4,2		6	2													
A6	C-07-21,22	C-07-100	28+56	31+35	279	279					8,8	6				6					4 (Encased)	4			4													
A12	C-07-22	C-07-101	31+35	33+22	187	187					8,8	6				6					4 (Encased)	4		6	4													
A10	C-07-22	C-07-102	33+71	35+51	180	180					8,8					6					4 (Encased)	4		6	4													
A7	C-07-22,23	C-07-101	35+51	37+21	170		170				10	6				6					4 (Encased)	4			4													
A10	C-07-23	C-07-102	37+21	44+73	752	752					8,8	6				6					4 (Encased)	4		6	4													
A11	C-07-23	C-07-101	44+73	45+50	77	77.15					8,8	6				6					4 (Encased)	4		6	4													
A6	C-07-24	C-07-100	45+50	54+93	943	943.36					8,8	6				6					4 (Encased)	4		6	4													
B1	C-07-26,27	C-07-103	3+05	20+43	1738	1738					12										4			6,12													
B2	C-07-27,28,29	C-07-103	20+43	31+03	1060	1060					12													6													
B3	C-07-29	C-07-83/E	31+03	40+19	916					916	12																											
B4	C-07-30	C-07-101	40+19	43+30	311	311					12																											
B5	C-07-30	C-07-101	43+30	45+15	185	185					12																											
B4	C-07-30	C-07-101	45+15	46+63	148	148					12																											
B6	C-07-30	C-07-101	46+63	48+12	149	149					12																											
B4	C-07-30,31,32,33, 34,35,36,37	C-07-101	48+12	109+10	6098	6098					12																											
B7	C-07-37	C-07-101	109+10	110+10	100	100					12																											
B4	C-07-37	C-07-101	110+10	112+53	243	243					12																											
C1	C-07-39	C-07-108	10+00	10+39	39	39											6			2,2		2		6	2													
C2	C-07-39	C-07-108	10+39	13+11	272	272							2				6	4		2,2,2,2		2		6	2													
C3	C-07-39,40,41	C-07-108	13+11	21+22	811	811							2				6,6	6		2,2,2,2,2,2,2,2,3,3,3	4 (Encased)	2		6	2													
C4	C-07-41	C-07-108	21+22	22+75	153	153					8,8	6	2				6,6	6,6		2,2,2	4 (Encased)	2		6,6	2													
C5	C-07-43,44	C-07-108	18+95	22+75	380	380					8,8	6	2	2	3		3,6	6,4		2,2,2,2		2		6,6,6,6	2									6	10				
C6	C-07-41	C-07-108	22+75	25+75	300	300					2	6,6	2,2	2	3		6,6	6,6,6,6		2,2,2,2,2,2,2,3	4 (Encased)	2		6,6,6,6,6,6	2									6					
C7	C-07-44	C-07-109	18+95	20+53	158	158					8,8	6	2	2			3	6,4		3,3,3,3,3,3	4 (Encased)	2		6,6,6,4	2									6	10				
C8	C-07-44,45,46	C-07-109	20+53	27+00	647	647					8,8	6	2	2			3	6,4		2,2	4 (Encased)	2		6,6,6,4	2									6	10				
C9	C-07-46	C-07-109	27+00	28+88	188				188		8,8	6	2	2			3	6,4		2,2	4 (Encased)	2		6,6,6,4	2									6	10				
C8	C-07-46	C-07-109	28+88	29+50	62	62					8,8	6	2	2			3	6,4		2,2	4 (Encased)	2		6,6,6,4	2									6	10				
C10	C-07-47	C-07-109	29+50	30+55	105	105					8,8	6		2	3			4		2,2	4 (Encased)	2		4,6,6	2									6					
C11	C-07-47,48	C-07-109	30+55	38+93	838	838											2			2,2,2,2,2,2		2			2													
C13	C-07-42	C-07-109	10+00	12+75	275	275							2					6		2,2,2,2		2		4,6	2										10			
C14	C-07-49	C-07-110	10+00	20+50	1050	1050							2					4		3,3,3,3,3,3	4 (Encased)	2		4,6	2										10			
C15	C-07-50	C-07-110	10+00	11+93	193	193							2					6		2,2,2,2	4 (Encased)	2		4,6	2										10			
C16	C-07-50	C-07-110	11+93	15+79	386	386							2					6		2,2,2,2	4 (Encased)	2		4,6	2										10			
C17	C-07-51	C-07-110	10+00	12+49	249	249							2					6		2,2	4 (Encased)	2		4,6	2										10			
C18	C-07-59	C-07-111	10+00	16+00	600	600											2			2		2			2													
D1	C-07-79	C-07-103A	75+00	75+81	81	81								2						4		4								6								
D2	C-07-79	C-07-103A	75+00	77+75	245	245														4		4																
F1	C-07-52	C-07-110	10+00	14+00	400	400					8,8	6		2		4	3			2,2,2,2,2,2,2,2,2,2	4 (Encased)	2		4,6,6	2									6					
F2	C-07-52	C-07-110	14+00	14+40	40	40					4	6		2		4	3				4 (Encased)	2		4,6,6	2									6					
F3	C-07-52	C-07-110	14+40	15+39	99	99						6		2			2				4 (Encased)	2		4,6,6	2									6			2		
F5	C-07-70	C-07-104	15+33	17+75	242		242					6		2		4						4		4,6,6										6			2		
F6	C-07-70,71	C-07-104	17+75	20+93	318		318					6		2		4						4		4,6,6										6			2		
F7	C-07-71	C-07-104	20+93	23+00	207		207					6		2		4						4		4,6,6										6			2		
F8	C-07-72	C-07-104	23+00	26+24	324		324					6		2		4						4		4,6,6										6					
G1	C-07-54,55	C-07-111	10+00	13+78	378	378											6			3,3,3		2			2													
G2	C-07-55,56	C-07-111	13+78	19+47	569	569											6			3,3		2			2													
G3	C-07-56	C-07-111	19+47	22+65	318	318											6			3		2			2													
G4	C-07-56,57	C-07-111	22+65	25+57	292	292											6			3,3		2			2													
G5	C-07-57,58	C-07-111	25+57	30+35	478	478											6			3,3,3		2			2													
G6	C-07-58	C-07-111	30+35	33+21	286	286											6			3,3,3,3,3		2			2													
H1	C-07-25	C-07-102	10+00	14+13	413	413					6	6				6				2,2					2										10			
H2	C-07-25	C-07-102	14+13	15+33	120	120					6	6				6				2		2			2													
I1	C-07-78,78A	C-07-102	10+00	21+10	1110	1110					2	4								4		2		4	2							2						
J1	C-07-68,69	C-07-103A	8+31	15+83	752	752					8,8										2																	
K1	C-07-73	C-07-107	90+00	91+11	111		111					4		2						4		4								6		2						
L1	C-07-74	C-07-106	80+00	80+75	75		75				12			2,2						4		4		2,2		2	2						2			2		
L2	C-07-74	C-07-106	80+75	81+48	73		73				12			2,2						4		4		2,2		2	2		6				2			2		
L3	C-07-74	C-07-107	81+48	83+95	247		247				3	4		2,2						4		4		2,2		2	2				2,2	2				2		
M1	C-07-75	C-07-105	59+27	59+75	48		48				4		4,2,2	2		4								4,6,6		2	2		2			2	6		2		2	2
M2	C-07-75	C-07-105	59+75	61+35	160		160						4	2		4								6			2				2						
M3	C-07-75	C-07-105	61+35	62+05	70		70						3			4				4		4		6			2										
M4	C-07-75,75	C-07-105	62+05	67+02	497		497						3			4				4		4		6			2										
M5	C-07-76	C-07-106	67+02	68+15	113		113						4			4				4		4		6													
M6	C-07-76	C-07-106	68+15	70+30	215		215						4			4				4		4		6													
N1	C-07-77	C-07-107	85+00	86+38	138	138							3			3				4		4															
T1	C-07-81	C-07-103A	60+00	60+85	85	85																								2							
			Totals			30402	25549	3700	0	188	916	25891	37677	6761	4660	785	6705	8952	7717	0	49463	10469	19070		29079	15453	443	443	48	265	860	0	1923	443	3518	3726	443	866	48	48

UT-Underground Trench; CT-Concrete Trench; AG-Above Ground; BJ-Bore and Jack; BA-Bridge Attachment
See C-00-12 For Pipe ID and Abbreviation Schedule

- FINAL DESIGN - FOR AGENCY APPROVAL ONLY

REGISTERED PROFESSIONAL ENGINEER BENJAMIN J. WUESTL C 67811 EXP 6/30/17 STATE OF CALIFORNIA

ETIC ENGINEERING

ARCADIS

NO.	DATE	DESCRIPTION	GM/SPEC	DWN	CHKD	SUPV	APVD BY
4	11/18/15	FINAL DESIGN		AJW	WLM	BW	RAO
3	12/30/14	SUPPLEMENTAL PRE-FINAL (90%) DESIGN		PC	PT	VMB	VMB
2	9/18/14	PRE-FINAL (90%) DESIGN		PC	PT	VMB	VMB
1	4/5/13	INTERMEDIATE (60%) DESIGN		PC	PT	VMB	VMB
0	11/18/11	PRELIMINARY (30%) DESIGN		PC	PT	VMB	VMB

REVISIONS

APPROVED BY	
	SO
RAO	SUPV
	DSGN
	DWN
	CHKD
	OK
	DATE
	SCALES

TOPOCK GROUNDWATER REMEDIATION PROJECT

PIPE SCHEDULE

GAS TRANSMISSION & DISTRIBUTION
PACIFIC GAS AND ELECTRIC COMPANY
SAN FRANCISCO, CALIFORNIA

MICROFILM	
BILL OF MATL	
DWG LIST	
SUPSDS	
SUPSD BY	
SHEET NO.	of SHEETS
C-07-03	REV 4

N1808

11/02/2015, 14:42, G:\Graphics\ARITOPOCK-01\Submittal_100%\DWGs\C-Civil\C-07-03.DWG, Tab: C-07-03

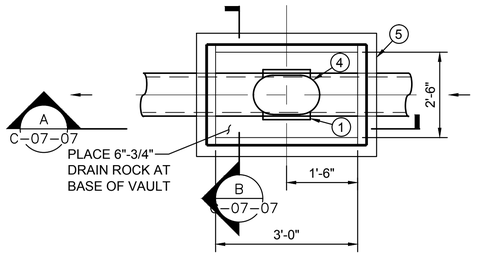

PLAN VIEW

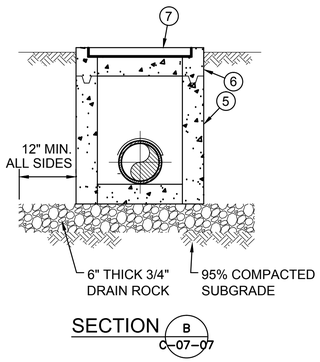

SECTION B C-07-07

1 DETAIL
3/4" = 1'-0"

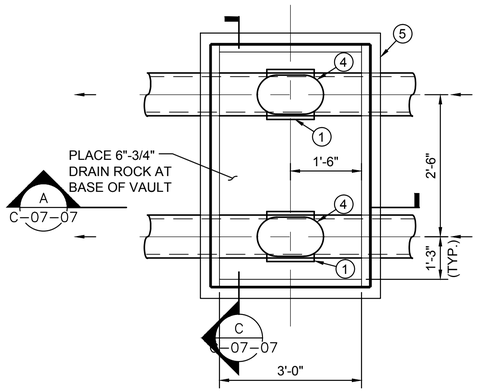

PLAN VIEW

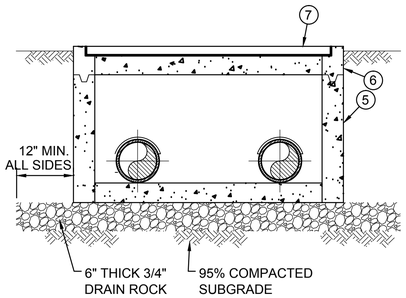

SECTION C C-07-07

2 DETAIL
3/4" = 1'-0"

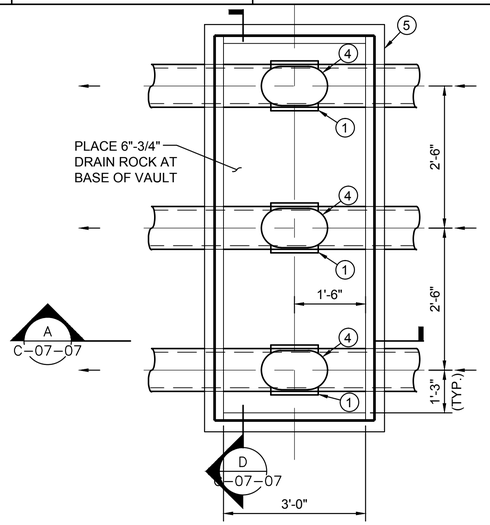

PLAN VIEW

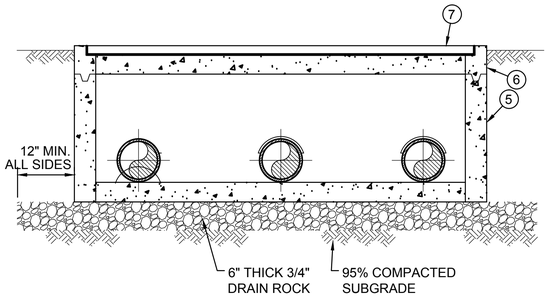

SECTION D C-07-07

3 DETAIL
3/4" = 1'-0"

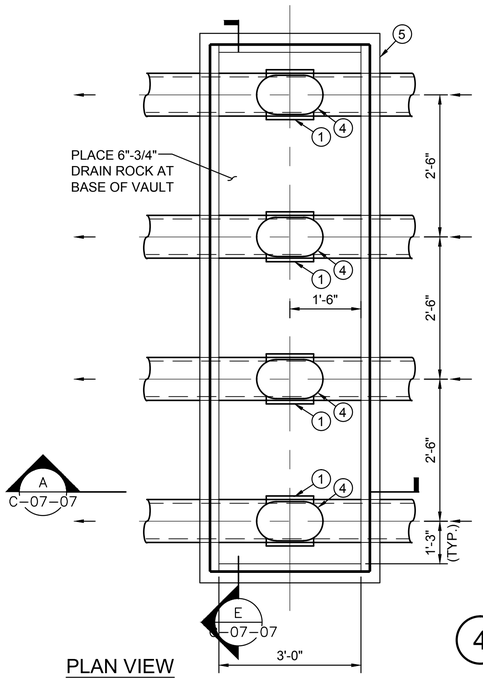

PLAN VIEW

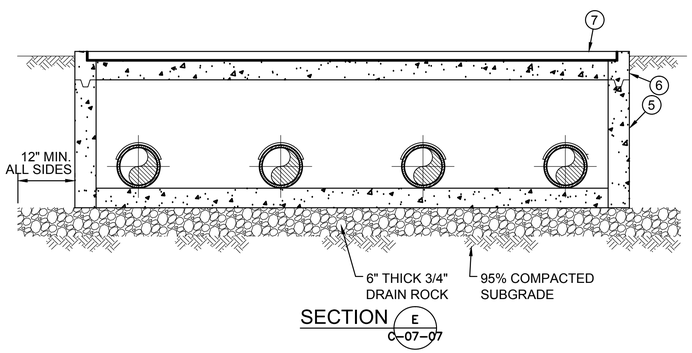

SECTION E C-07-07

4 DETAIL
3/4" = 1'-0"

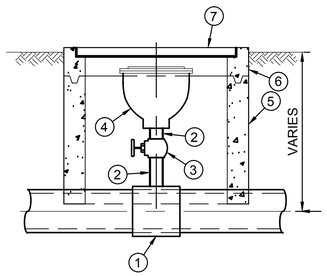

A SECTION
3/4" = 1'-0"

KEY

1. BUTT FUSION WELDED HDPE REDUCING TEE WITH 2" BUTT OUTLET.
2. 2 INCH DIAMETER BRASS NIPPLE WITH MALE THREADED PIPE ENDS.
3. 2 INCH DIAMETER BRASS GATE VALVE WITH HANDWHEEL AND FEMALE THREADED PIPE ENDS.
4. 2 INCH DIAMETER SINGLE BODY COMBINATION AIR VALVE AND VACUUM VALVE
5. PRECAST UTILITY VAULT LOWER SECTION. WALL OPENINGS PROVIDED AS SHOWN ON PLAN AND SECTIONS. PROVIDE KEYED CONSTRUCTION JOINT WITH PREFORMED CONCRETE JOINT SEALANT. PROVIDE WATERSTOP AT ALL JOINTS.
6. PRECAST UTILITY VAULT. PROVIDE KEYED CONSTRUCTION JOINT WITH PREFORMED CONCRETE JOINT SEALANT. PROVIDE WATERSTOP AT ALL JOINTS. PROVIDE CAST IN FRAME FOR TRAFFIC COVER.
7. ONE PIECE TRAFFIC COVER DESIGNED FOR AASHTO H20-44 TRAFFIC LOADING. FOUR ½ INCH DIAMETER 13NC THREADED BOLTS SHALL BE SUPPLIED FOR SECURING COVER TO FRAME IN TOP SECTION. PROVIDE RED PRIMER PAINT FINISH.

- FINAL DESIGN - FOR AGENCY APPROVAL ONLY

REGISTERED PROFESSIONAL ENGINEER BENJAMIN J. WUERL C 67811 EXP 6/30/17 STATE OF CALIFORNIA

ETIC ENGINEERING

ARCADIS

NO.	DATE	DESCRIPTION	GM/SPEC	DWN	CHKD	SUPV	APVD BY
2	11/18/15	FINAL DESIGN		AJW	WLM	BW	RAO
1	9/8/14	PRE-FINAL (90%) DESIGN		PH	PT	VMB	VMB
0	4/5/13	INTERMEDIATE (60%) DESIGN		PC	PT	PT	VMB

REVISIONS

APPROVED BY	
	SO
RAO	SUPV
	DSGN
	DWN
	CHKD
	OK
	DATE
	SCALES

TOPOCK GROUNDWATER REMEDIATION PROJECT

COMBINATION AIR RELIEF AND VACUUM VALVE DETAILS

GAS TRANSMISSION & DISTRIBUTION
PACIFIC GAS AND ELECTRIC COMPANY
SAN FRANCISCO, CALIFORNIA

MICROFILM	
BILL OF MATL	
DWG LIST	
SUPSDS	
SUPSD BY	
SHEET NO. of SHEETS	
C-07-07	REV 2

N1808

11/02/2015, 14:42, G:\Graphics\ARTOPOCK-01\Submittal_100%\DWGs\C-Civil\C-07-07.dwg, Tab: C-07-07

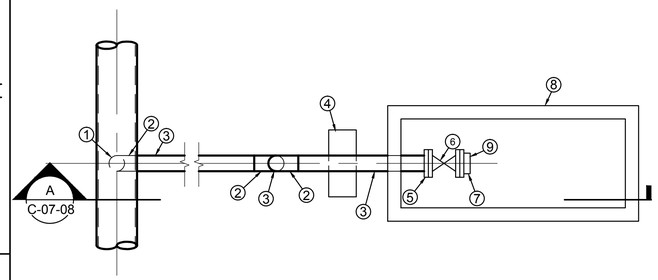

PLAN VIEW

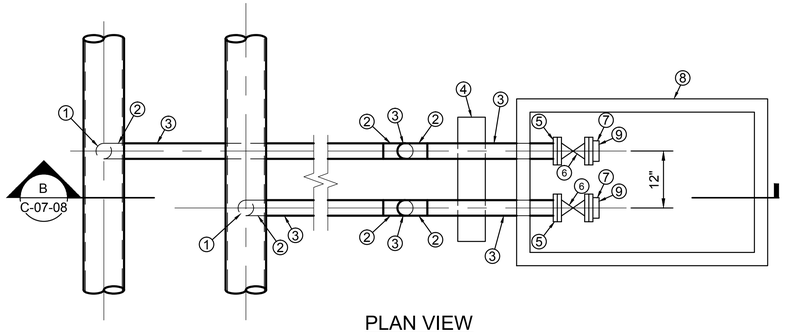

PLAN VIEW

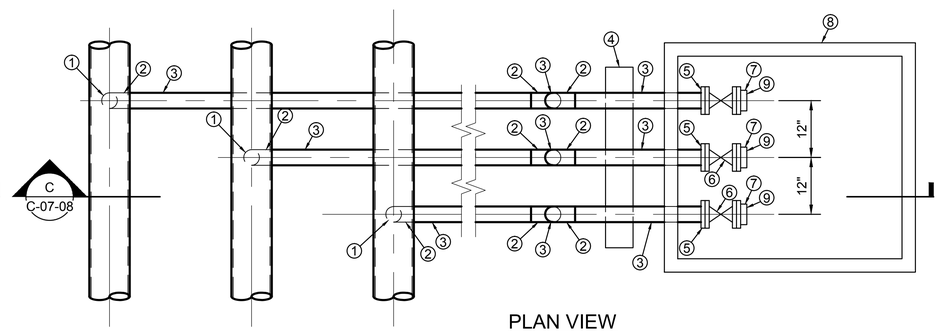

PLAN VIEW

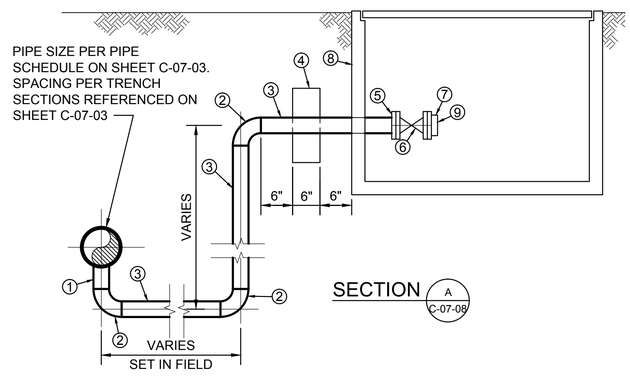

1 DETAIL
3/4" = 1'-0"

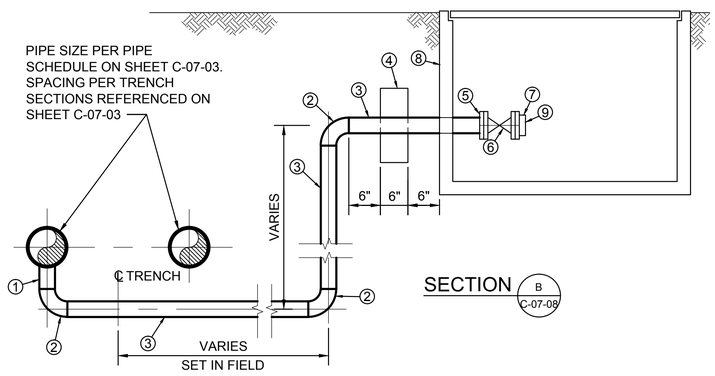

2 DETAIL
3/4" = 1'-0"

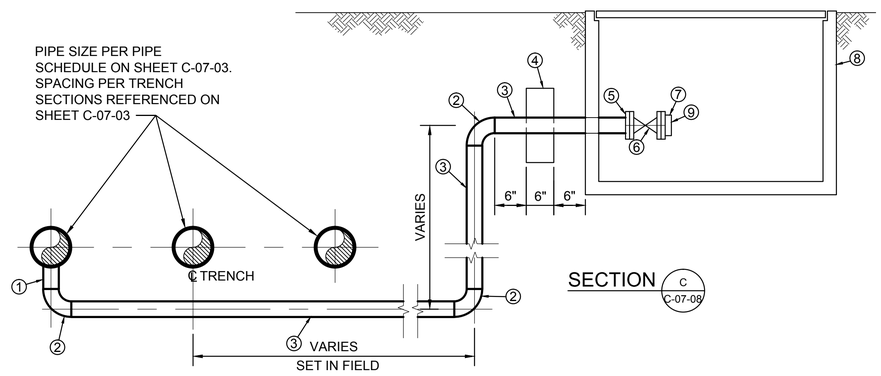

3 DETAIL
3/4" = 1'-0"

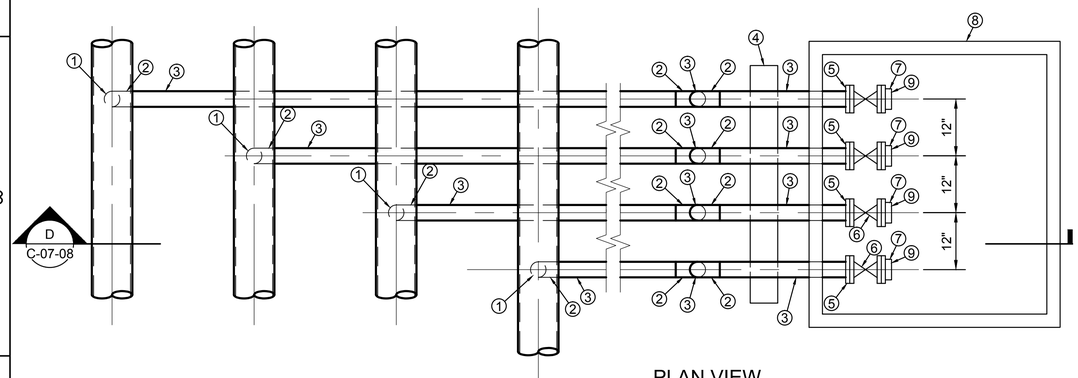

PLAN VIEW

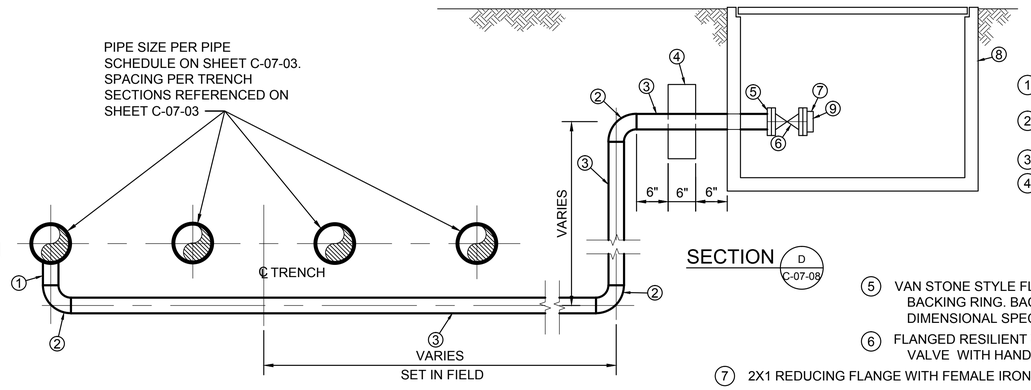

4 DETAIL
3/4" = 1'-0"

KEY

1. BUTT FUSION WELDED HDPE REDUCING TEE WITH 2" BUTT OUTLET.
2. 2 INCH DIAMETER HDPE 90 DEGREE ELBOW WITH BUTT ENDS.
3. 2 INCH DIAMETER HDPE PIPE.
4. CONCRETE THRUST COLLAR TO ENCASE EACH BLOW OFF LATERAL IN ONE MONOLITH. THRUST COLLAR TO EXTEND SIX INCHES ABOVE AND BELOW EACH PIPE AND ALONG THE OPPOSITE ENDS NOT JOINED IN THE MIDDLE.
5. VAN STONE STYLE FLANGE WITH TYPE 316 STAINLESS STEEL BACKING RING. BACKING RINGS TO MEET STANDARD DIMENSIONAL SPECIFICATIONS.
6. FLANGED RESILIENT WEDGE GATE VALVE WITH HAND WHEEL OPERATOR.
7. 2X1 REDUCING FLANGE WITH FEMALE IRON PIPE THREADS.
8. PRECAST UTILITY VAULT. WALL OPENINGS PROVIDED AS SHOWN ON PLAN AND SECTIONS. PROVIDE KEYED CONSTRUCTION JOINT WITH PREFORMED CONCRETE JOINT SEALANT. PROVIDE WATERSTOP AT ALL JOINTS. PROVIDE CAST IN FRAME FOR TRAFFIC COVER. ONE PIECE TRAFFIC COVER DESIGNED FOR AASHTO H20-44 TRAFFIC LOADING. FOUR ½ INCH DIAMETER 13NC THREADED BOLTS SHALL BE SUPPLIED FOR SECURING COVER TO FRAME IN TOP SECTION.
9. 1 INCH DIAMETER NIPPLE WITH MALE PIPE THREADS. SUPPLY WITH CAP FOR HOSE THREADED END.

- FINAL DESIGN - FOR AGENCY APPROVAL ONLY

REGISTERED PROFESSIONAL ENGINEER BENJAMIN J. WUERL C 67811 EXP 6/30/17 STATE OF CALIFORNIA

ETIC ENGINEERING

ARCADIS

NO.	DATE	DESCRIPTION	GM/SPEC	DWN	CHKD	SUPV	APVD BY
2	11/18/15	FINAL DESIGN		AJW	WLM	BW	RAO
1	9/8/14	PRE-FINAL (90%) DESIGN		PH	PT	VMB	VMB
0	4/5/13	INTERMEDIATE (60%) DESIGN		PC	PT	PT	VMB

REVISIONS

APPROVED BY	
RAO	SO
	SUPV
	DSGN
	DWN
	CHKD
	OK
	DATE
	SCALES

TOPOCK GROUNDWATER REMEDIATION PROJECT

BLOW OFF DETAILS

GAS TRANSMISSION & DISTRIBUTION
PACIFIC GAS AND ELECTRIC COMPANY
SAN FRANCISCO, CALIFORNIA

MICROFILM	
BILL OF MATL	
DWG LIST	
SUPSDS	
SUPSD BY	
SHEET NO. of SHEETS	
C-07-08	REV 1

N1808

11/02/2015, 14:42, G:\Graphics\ARTTOPOCK-01\Submittal_100%\DWGs\C-Civil\C-07-08.dwg, Tab: C-07-08

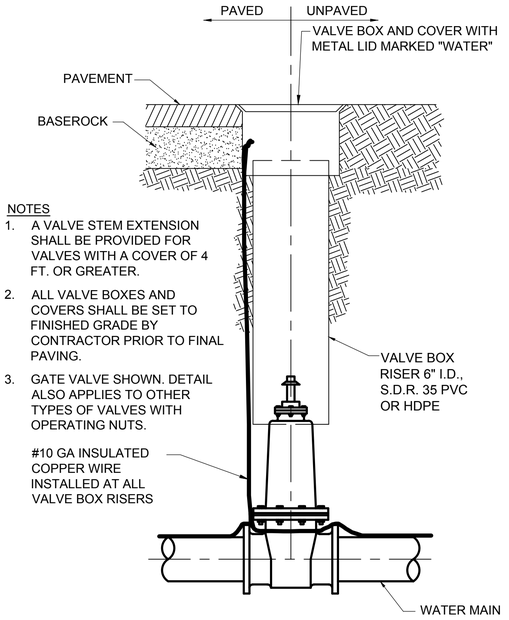

1 BURIED VALVE
N.T.S
C-07-30

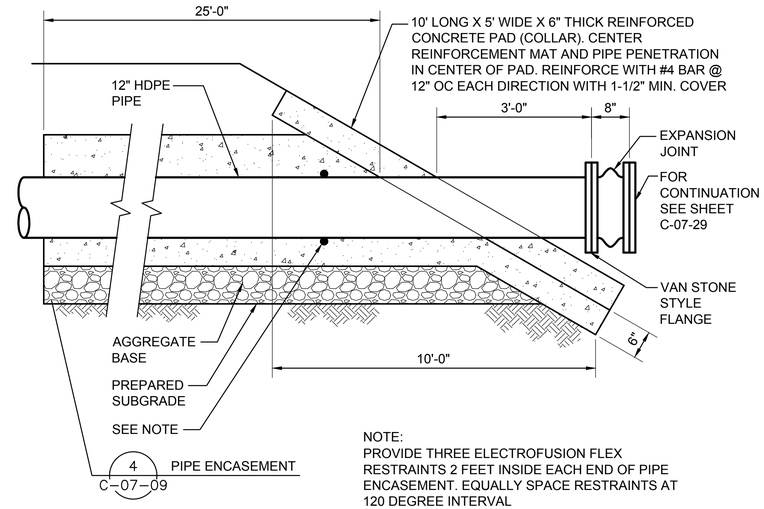

2 PIPE DAYLIGHT DETAIL
N.T.S
C-07-30

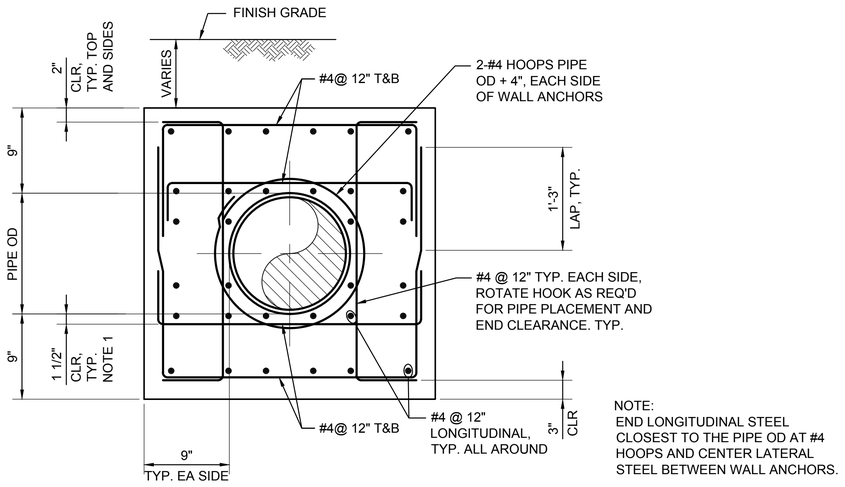

NOTE:
END LONGITUDINAL STEEL CLOSEST TO THE PIPE OD AT #4 HOOPS AND CENTER LATERAL STEEL BETWEEN WALL ANCHORS.

3 PIPE ENCASEMENT
N.T.S
C-07-37

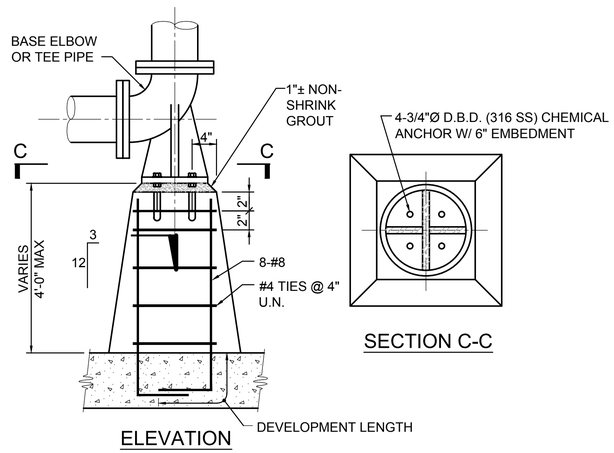

4 BASE MOUNTED PIPE SUPPORT
N.T.S

- FINAL DESIGN - FOR AGENCY APPROVAL ONLY

REGISTERED PROFESSIONAL ENGINEER BENJAMIN J. WUERL C 67811 EXP 6/30/17 STATE OF CALIFORNIA

ETIC ENGINEERING

ARCADIS

NO.	DATE	DESCRIPTION	GM/SPEC	DWN	CHKD	SUPV	APVD BY
2	11/18/15	FINAL DESIGN		AJW	WLM	BW	RAO
1	12/30/14	SUPPLEMENTAL PRE-FINAL (90%) DESIGN		MD	PT	VMB	VMB
0	12/05/14	PRE-FINAL (90%) DESIGN		PH	VMB	VMB	VMB

REVISIONS

APPROVED BY	
	SO
RAO	SUPV
	DSGN
	DWN
	CHKD
	OK
	DATE
	SCALES

TOPOCK GROUNDWATER REMEDIATION PROJECT

PIPELINE DETAILS

GAS TRANSMISSION & DISTRIBUTION
PACIFIC GAS AND ELECTRIC COMPANY
SAN FRANCISCO, CALIFORNIA

MICROFILM	
BILL OF MATL	
DWG LIST	
SUPSDS	
SUPSD BY	
SHEET NO. of	SHEETS
C-07-09	REV 1

11/02/2015, 14:42, G:\Graphics\AR\TOPOCK-01\Submittal_100%\DWGs\C-Civil\C-07-09.dwg, Tab: C-07-09

N1808

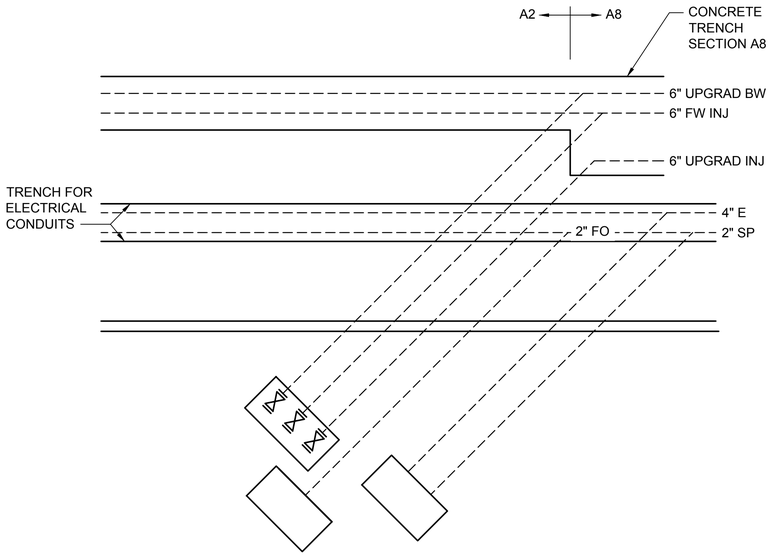

PLAN
NTS

1 IRL-5 PLAN

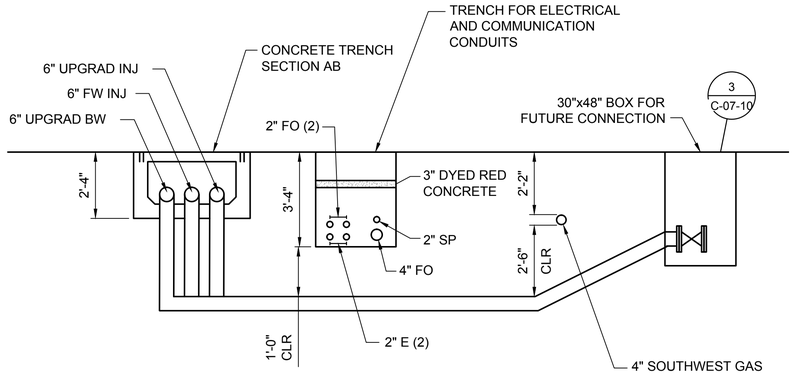

PROFILE
NTS

2 IRL-5 PROFILE
C-07-20

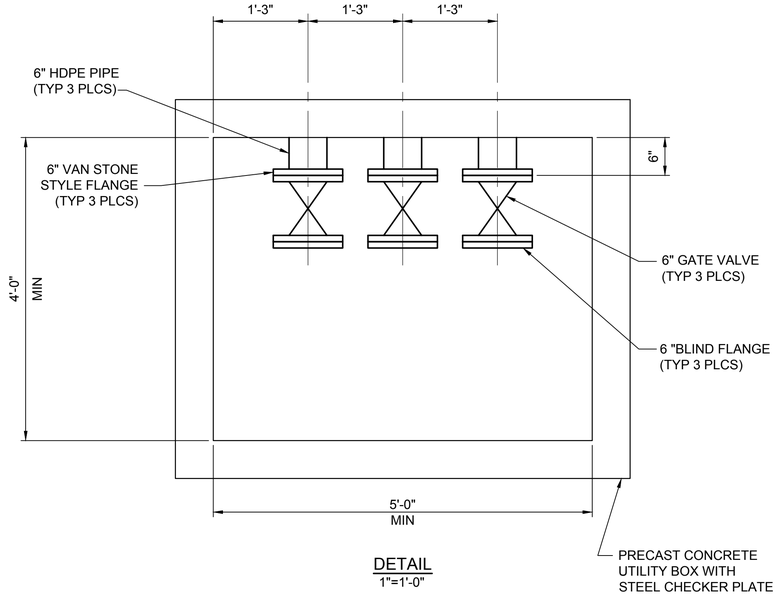

DETAIL
1"=1'-0"

3 IRL-5 DETAIL
C-07-10

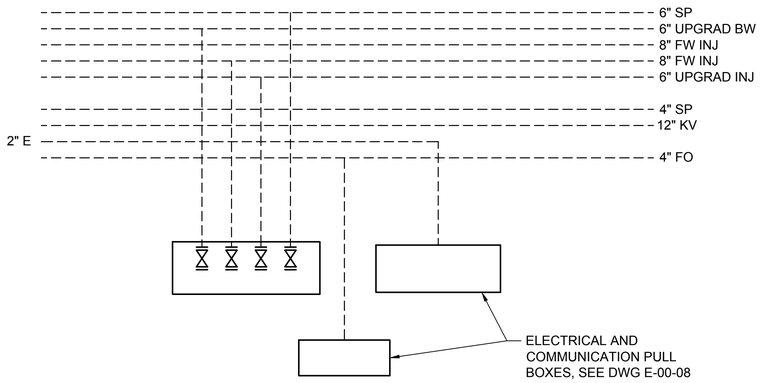

PLAN
NTS

4 IRL-7 PLAN

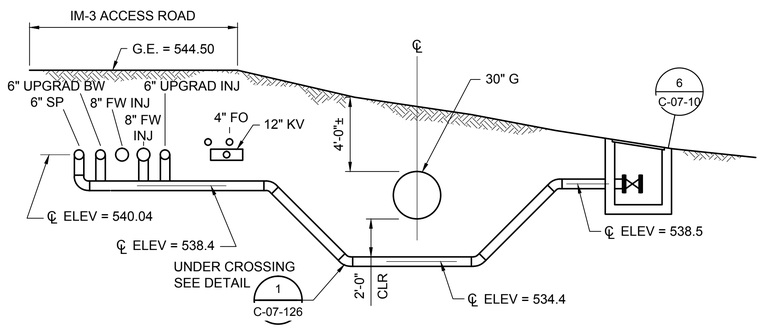

PROFILE
1/4"=1'-0"

5 IRL-7 PROFILE
C-07-23

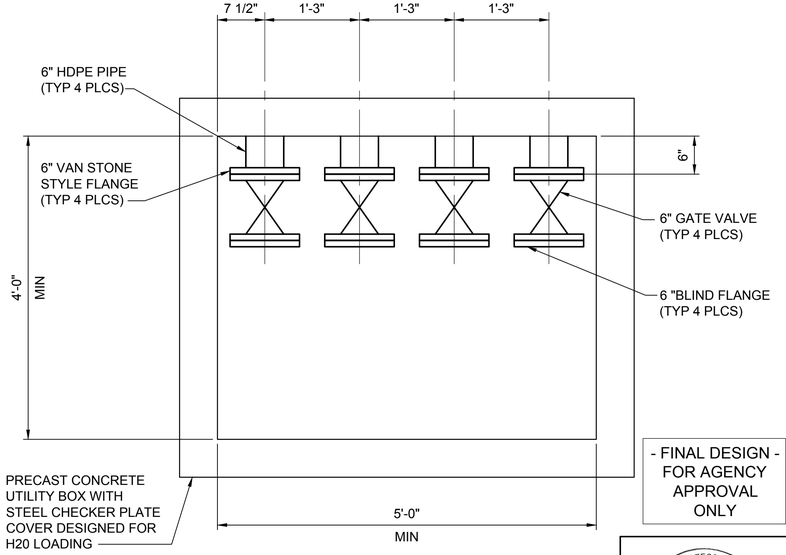

DETAIL
1"=1'-0"

6 IRL-7 DETAIL
C-07-10

- FINAL DESIGN - FOR AGENCY APPROVAL ONLY

REGISTERED PROFESSIONAL ENGINEER
BENJAMIN J. WUERL
C 67811
EXP 6/30/17
STATE OF CALIFORNIA

ETIC ENGINEERING

ARCADIS

NO.	DATE	DESCRIPTION	GM/SPEC	DWN	CHKD	SUPV	APVD	BY
1	11/18/15	FINAL DESIGN		AJW	WLM	BW	RAO	
0	12/30/14	SUPPLEMENTAL PRE-FINAL (90%) DESIGN		PH	PT	PT	VMB	

REVISIONS

APPROVED BY	
RAO	SO
	SUPV
	DSGN
	DWN
	CHKD
	OK
	DATE
	SCALES

TOPOCK GROUNDWATER REMEDIATION PROJECT

PIPELINE DETAILS 2

GAS TRANSMISSION & DISTRIBUTION
PACIFIC GAS AND ELECTRIC COMPANY
SAN FRANCISCO, CALIFORNIA

MICROFILM	
BILL OF MATL	
DWG LIST	
SUPSDS	
SUPSD BY	
SHEET NO. of SHEETS	
C-07-10	REV 1

N1808

11/02/2015, 14:40, G:\Graphics\ARTOPOCK-01\Submittal_100%\DWGs\C-Civil\C-07-10.dwg, Tab: C-07-10

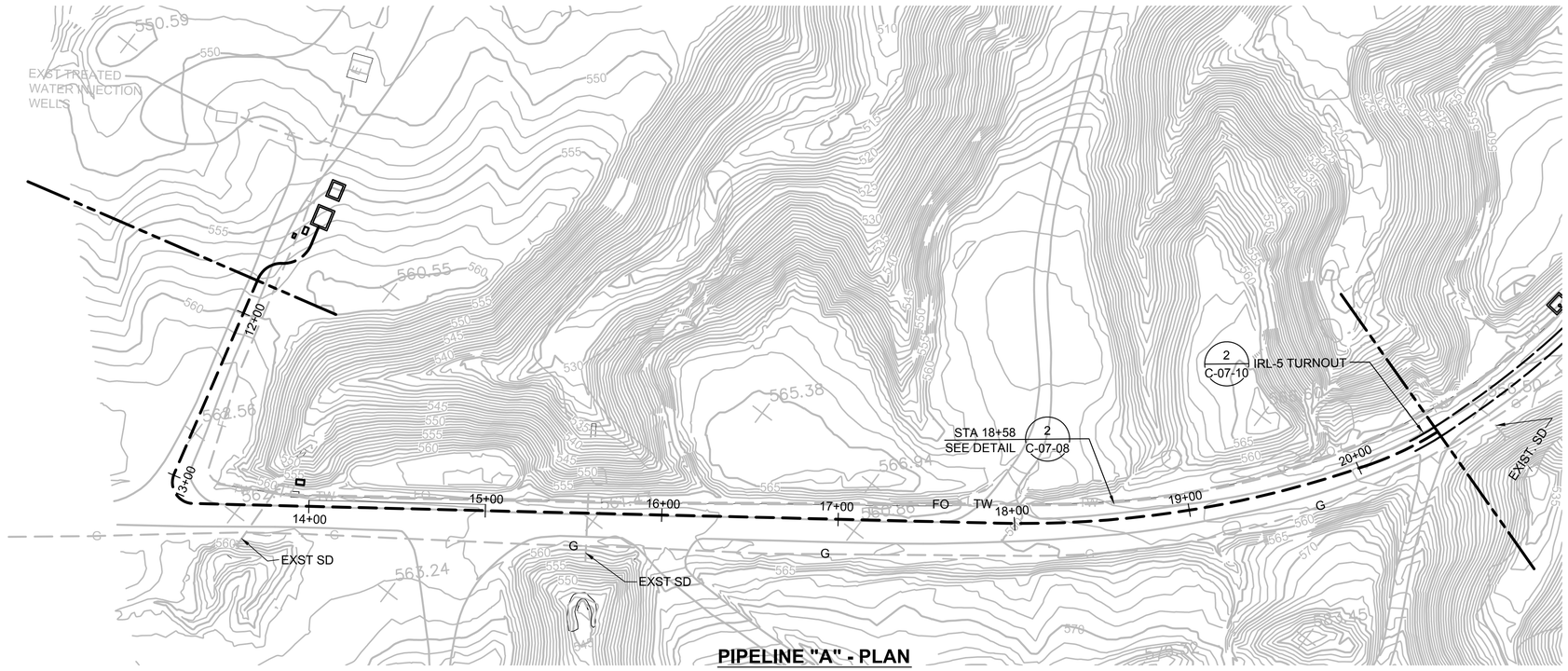

PIPELINE "A" - PLAN

(SCALE: 1" = 40' H)

NOTES:

1. THE NEW PIPELINE ALIGNMENT SHOWS CENTER OF TRENCH.
2. PROVIDE VEHICLE ACCESS AT OWNER'S DIRECTION.
3. PROTECT ABOVE GROUND PIPES IN PLACE.
4. MAINTAIN 3' MINIMUM HORIZONTAL CLEARANCE FROM EXISTING GAS LINE.

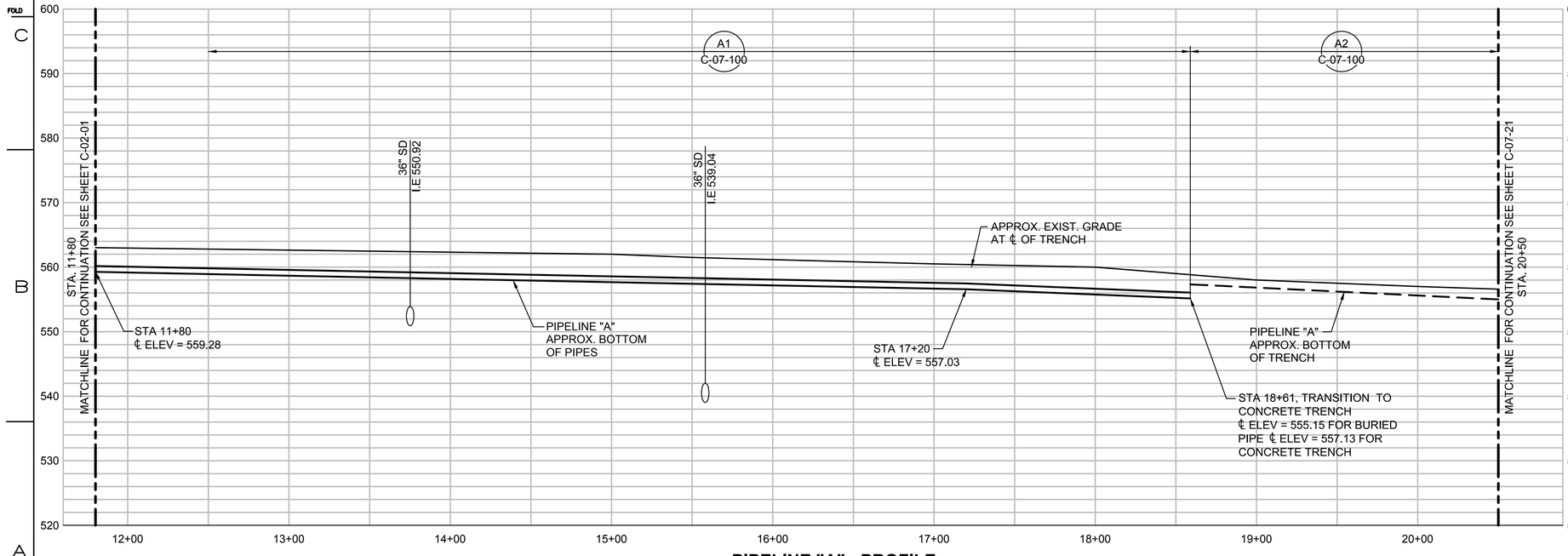

PIPELINE "A" - PROFILE

(SCALE: 1" = 40' H; 1" = 10' V)

HORZ: SCALE: 1"=40'

VERT: SCALE: 1"=10'

- FINAL DESIGN - FOR AGENCY APPROVAL ONLY

REGISTERED PROFESSIONAL ENGINEER BENJAMIN J. WUERL C 67811 EXP 6/30/17 CIVIL STATE OF CALIFORNIA

ETIC ENGINEERING

ARCADIS

NO.	DATE	DESCRIPTION	GM/SPEC	DWN	CHKD	SUPV	APVD BY
4	11/18/15	FINAL DESIGN		AJW	WLM	BW	RAO
3	12/30/14	SUPPLEMENTAL PRE-FINAL (90%) DESIGN		WTH	PT	PT	VMB
2	9/8/14	PRE-FINAL (90%) DESIGN		PH	PT	PT	VMB
1	4/5/13	INTERMEDIATE (60%) DESIGN		PC/EE	PT	PT	VMB
0	11/18/11	PRELIMINARY (30%) DESIGN		EE	PT	PT	VMB

REVISIONS

APPROVED BY	
RAO	SO
	SUPV
	DSGN
	DWN
	CHKD
	OK
	DATE
	SCALES

TOPOCK GROUNDWATER REMEDIATION PROJECT

PLAN AND PROFILE PIPELINE "A" STA 11+80 TO STA 20+50

GAS TRANSMISSION & DISTRIBUTION

PACIFIC GAS AND ELECTRIC COMPANY

SAN FRANCISCO, CALIFORNIA

MICROFILM	
BILL OF MATL	
DWG LIST	
SUPSDS	
SUPSD BY	
SHEET NO.	of SHEETS
C-07-20	REV 4

11/02/2015, 14:53, G:\Graphics\ARI\TOPOCK-01\Submittal_100%\DWGs\C-Civil\C-07-20.dwg, Tab: C-07-20

N1B08

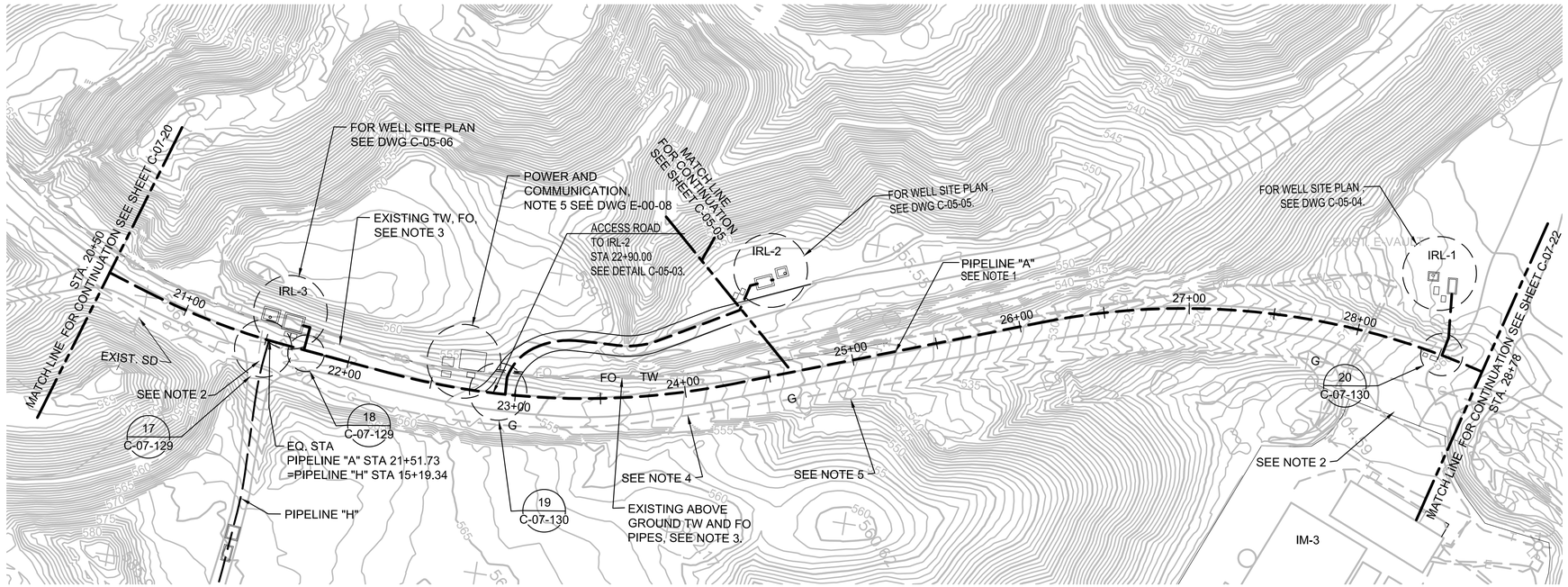

PIPELINE "A" - PLAN

(SCALE: 1" = 40' H)

NOTES:

1. THE PIPELINE ALIGNMENT SHOWS CENTER OF TRENCH.
2. PROVIDE VEHICLE ACCESS AT OWNER'S DIRECTION - AT ALL TIMES FOR IM-3 ENTRANCE ROAD.
3. PROTECT ABOVE GROUND PIPES IN PLACE.
4. MAINTAIN 3' MINIMUM HORIZONTAL CLEARANCE FROM EXISTING GAS LINE.
5. PROTECT EXISTING FLAGSTONE CUTTER IN PLACE.
6. FOR ELECTRICAL (PBX-DXX) COMMUNICATIONS (PBX-TXX) SEE DWGS E-00-07 AND E-00-08.

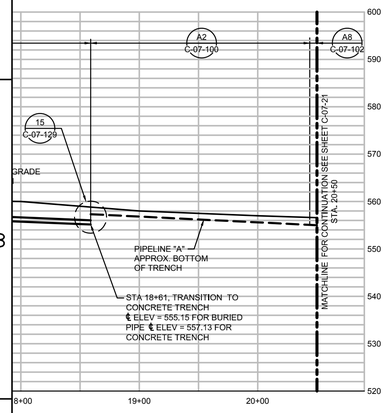

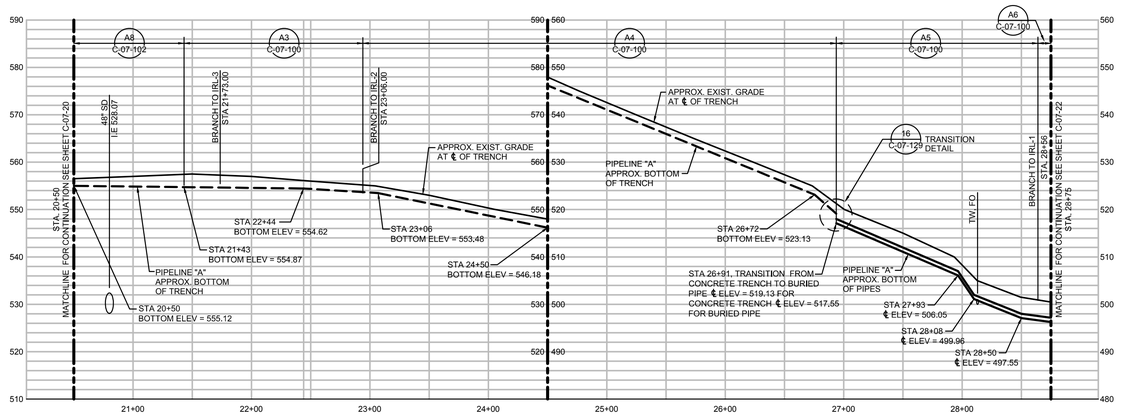

PIPELINE "A" - PROFILE

(SCALE: 1" = 40' H; 1" = 10' V)

HORZ: SCALE: 1"=40'

VERT: SCALE: 1"=10'

- FINAL DESIGN - FOR AGENCY APPROVAL ONLY

REGISTERED PROFESSIONAL ENGINEER BENJAMIN J. WURL C 67811 EXP 6/30/17 CIVIL STATE OF CALIFORNIA

ETIC ENGINEERING

ARCADIS

NO.	DATE	DESCRIPTION	GM/SPEC	DWN	CHKD	SUPV	APVD BY
4	11/18/15	FINAL DESIGN		AJW	WLM	BW	RAO
3	12/30/14	SUPPLEMENTAL PRE-FINAL (90%) DESIGN		WTH	PT	PT	VMB
2	9/8/14	PRE-FINAL (90%) DESIGN		PH	VMB	VMB	VMB
1	4/5/13	INTERMEDIATE (60%) DESIGN		PC	VMB	VMB	VMB
0	11/18/11	PRELIMINARY (30%) DESIGN		PC	VMB	VMB	VMB

REVISIONS

APPROVED BY	
	SO
	SUPV
RAO	DSGN
	DWN
	CHKD
	OK
	DATE
	SCALES

TOPOCK GROUNDWATER REMEDIATION PROJECT

PLAN AND PROFILE PIPELINE "A" STA 20+50 TO STA 28+75

GAS TRANSMISSION & DISTRIBUTION

PACIFIC GAS AND ELECTRIC COMPANY

SAN FRANCISCO, CALIFORNIA

MICROFILM	
BILL OF MATL	
DWG LIST	
SUPSDS	
SUPSD BY	
SHEET NO.	of SHEETS
C-07-21	REV 4

N1808

11/02/2015, 14:54, G:\Graphics\AR\TOPOCK-011Submittal_100%\DWGs\C-Civil\C-07-21.dwg, Tab: C-07-21

NOTES:

1. THE PIPELINE ALIGNMENT SHOWS CENTER OF TRENCH.
2. PROVIDE VEHICLE ACCESS AT OWNER'S DIRECTION.
3. MAINTAIN 3' MINIMUM HORIZONTAL CLEARANCE FROM EXISTING IM-3 PIPING (E, T, TW, BR & FO).
4. EXCAVATION SHALL AVOID SOIL DISTURBANCE WITHIN DRIP LINE OF MATURE VEGETATION.

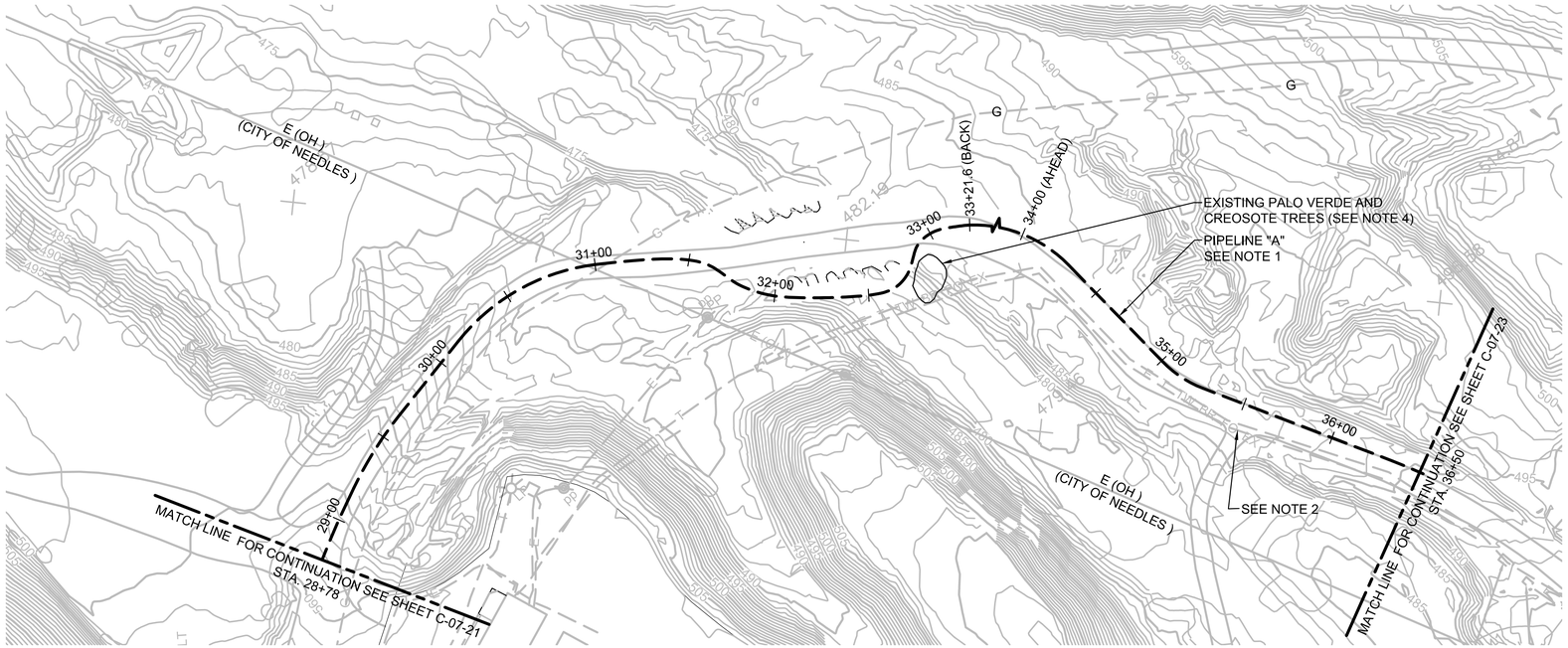

PIPELINE "A" - PLAN

(SCALE: 1" = 40' H)

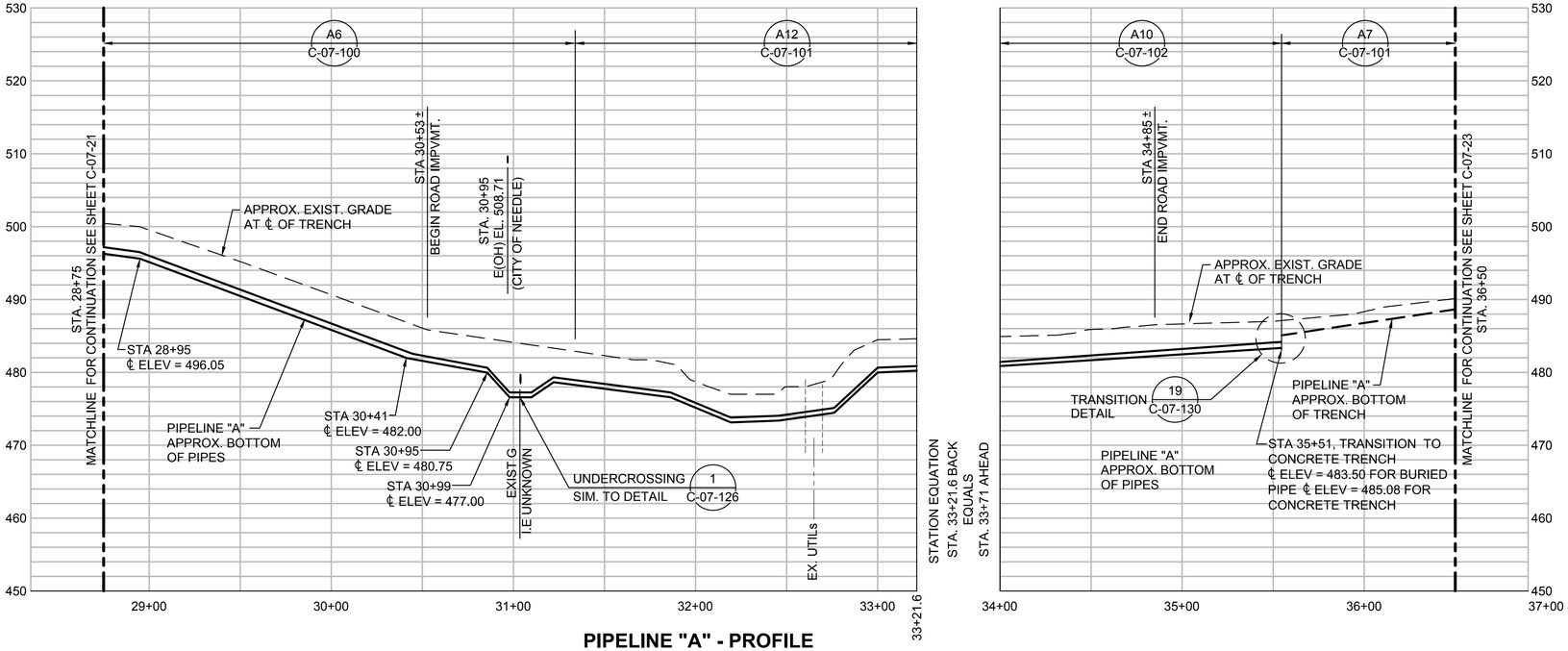

PIPELINE "A" - PROFILE

(SCALE: 1" = 40' H; 1" = 10' V)

HORZ: SCALE: 1"=40'

VERT: SCALE: 1"=10'

- FINAL DESIGN - FOR AGENCY APPROVAL ONLY

REGISTERED PROFESSIONAL ENGINEER BENJAMIN J. WUESL C 67811 EXP 6/30/17 STATE OF CALIFORNIA

ETIC ENGINEERING

ARCADIS

NO.	DATE	DESCRIPTION	GM/SPEC	DWN	CHKD	SUPV	APVD BY
5	11/18/15	FINAL DESIGN		AJW	WLM	BW	RAO
4	8/5/15	90% RTC RESOLUTION		AJW	KLD	JPB	JEF
3	12/30/14	SUPPLEMENTAL PRE-FINAL (90%) DESIGN		WTH	PT	PT	VMB
2	9/8/14	PRE-FINAL (90%) DESIGN		PH	PT	PT	VMB
1	4/5/13	INTERMEDIATE (60%) DESIGN		PC/EE	PT	PT	VMB
0	11/18/11	PRELIMINARY (30%) DESIGN		PC	PT	PT	VMB

REVISIONS

APPROVED BY	
RAO	
SO	
SUPV	
DSGN	
DWN	
CHKD	
OK	
DATE	
SCALES	

TOPOCK GROUNDWATER REMEDIATION PROJECT

PLAN AND PROFILE PIPELINE "A" STA 28+75 TO STA 36+50

GAS TRANSMISSION & DISTRIBUTION

PACIFIC GAS AND ELECTRIC COMPANY
SAN FRANCISCO, CALIFORNIA

MICROFILM	
BILL OF MATL	
DWG LIST	
SUPSDS	
SUPSD BY	
SHEET NO.	of SHEETS
C-07-22	REV 5

N1808

11/02/2015, 14:54, G:\Graphics\ARI\TOPOCK-01\Submittal_100%\DWGs\C-Civil\C-07-22.dwg, Tab: C-07-22

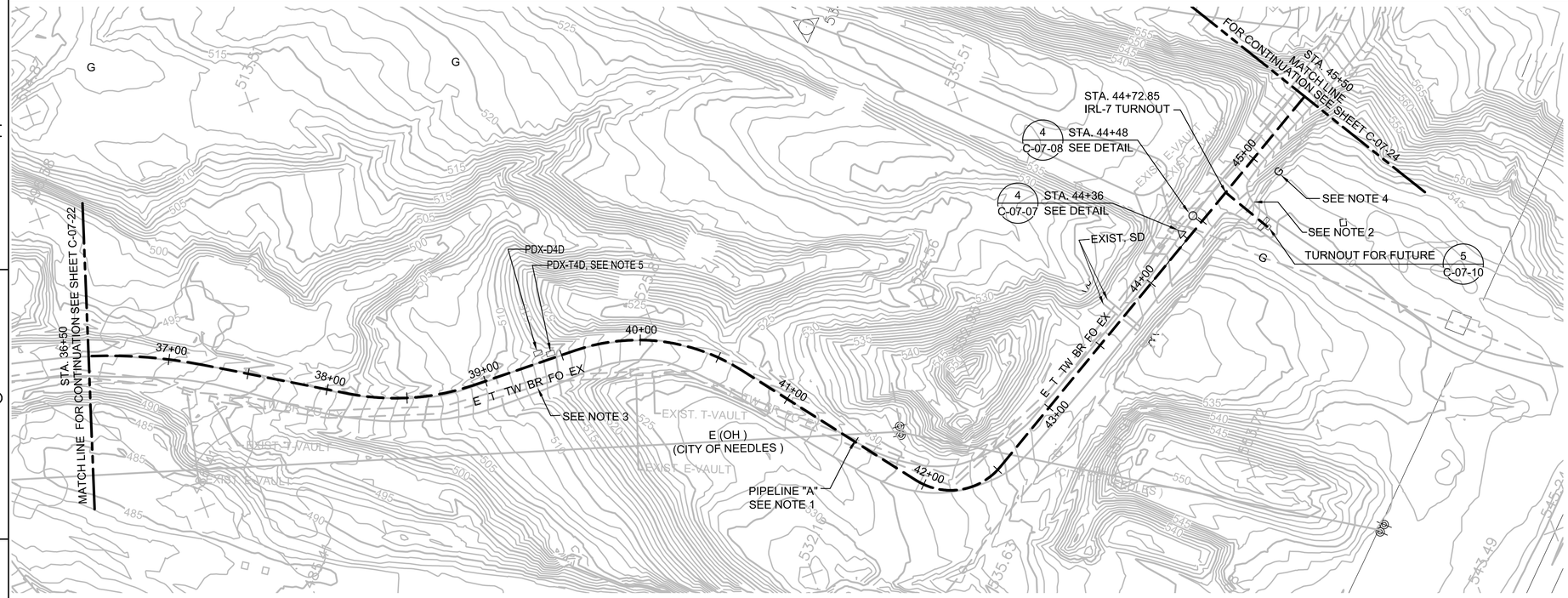

PIPELINE "A" - PLAN

(SCALE: 1" = 40' H)

NOTES:

1. THE NEW PIPELINE ALIGNMENT SHOWS CENTER OF TRENCH.
2. PROVIDE VEHICLE ACCESS AT OWNER'S DIRECTION.
3. MAINTAIN 3' MINIMUM HORIZONTAL CLEARANCE FROM EXISTING IM-3 PIPING (E, T, TW, BR & FO).
4. MAINTAIN 3' MINIMUM HORIZONTAL CLEARANCE FROM EXISTING GAS PIPING.
5. FOR ELECTRICAL (PBX-DXX) AND COMMUNICATIONS (PBX-TXX) SEE DWGS E-00-07 AND E-00-08.

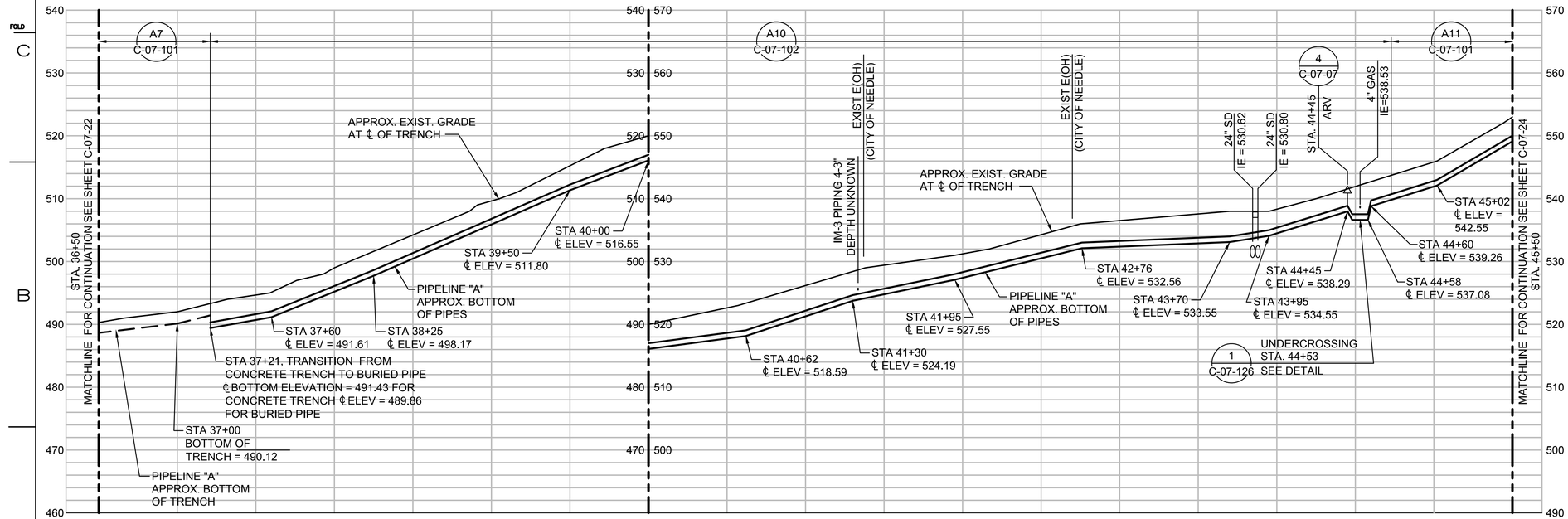

PIPELINE "A" - PROFILE

(SCALE: 1" = 40' H; 1" = 10' V)

HORZ: SCALE: 1"=40'

VERT: SCALE: 1"=10'

- FINAL DESIGN - FOR AGENCY APPROVAL ONLY

REGISTERED PROFESSIONAL ENGINEER BENJAMIN J. WUEST C 67811 EXP. 6/30/17 STATE OF CALIFORNIA

ETIC ENGINEERING

ARCADIS

NO.	DATE	DESCRIPTION	GM/SPEC	DWN	CHKD	SUPV	APVD BY
4	11/18/15	FINAL DESIGN	AJW	WLM	BW	RAO	
3	12/30/14	SUPPLEMENTAL PRE-FINAL (90%) DESIGN	WTH	PT	PT	VMB	
2	9/8/14	PRE-FINNAL (90%) DESIGN	PH	PT	PT	VMB	
1	4/5/13	INTERMEDIATE (60%) DESIGN	PC/EE	PT	PT	VMB	
0	11/18/11	PRELIMINARY (30%) DESIGN	EE	PT	PT	VMB	

REVISIONS

APPROVED BY	
RAO	

SO	
SUPV	
DSGN	
DWN	
CHKD	
OK	
DATE	
SCALES	

TOPOCK GROUNDWATER REMEDIATION PROJECT

PLAN AND PROFILE PIPELINE "A" STA 36+50 TO STA 45+00

GAS TRANSMISSION & DISTRIBUTION

PACIFIC GAS AND ELECTRIC COMPANY
SAN FRANCISCO, CALIFORNIA

MICROFILM	
BILL OF MATL	
DWG LIST	
SUPSDS	
SUPSD BY	
SHEET NO. of SHEETS	
C-07-23	REV 4

N1808

11/02/2015, 14:54, G:\Graphics\ARI\TOPOCK-01\Submittal_100%\DWGs\C-Civil\C-07-23.dwg, Tab: C-07-23

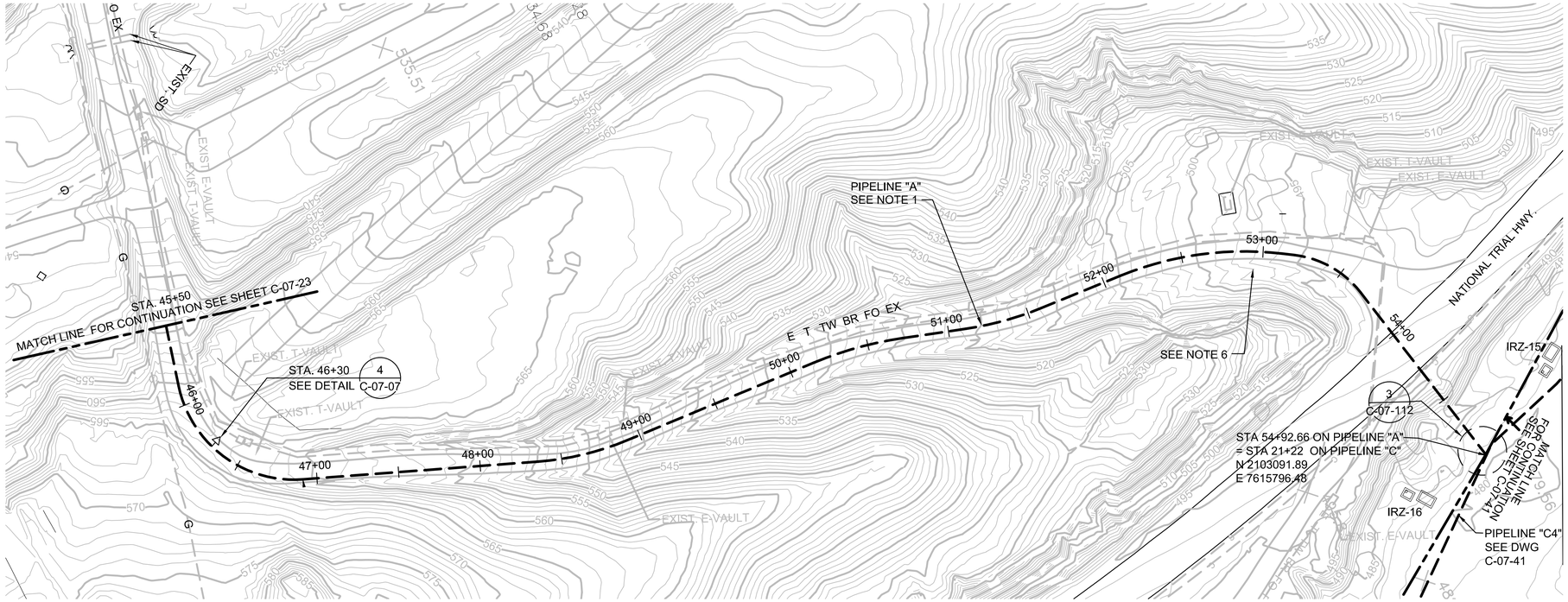

NOTES:

1. THE PIPELINE ALIGNMENT SHOWS CENTER OF TRENCH.
2. PROVIDE TRAFFIC CONTROL WHEN WORKING IN / NEAR ROADWAYS. COMPLY WITH OWNER'S ENCROACHMENT PERMIT WHEN WORKING IN ROAD RIGHT OF WAY.
3. PROVIDE VEHICLE ACCESS AT OWNER'S DIRECTION.
4. MAINTAIN 3' MINIMUM HORIZONTAL CLEARANCE FROM EXISTING IM-3 PIPING (E, T, TW, BR & FO)
5. MAINTAIN 3' MINIMUM HORIZONTAL CLEARANCE FROM EXISTING GAS PIPING.
6. PRESERVE AND MAINTAIN EXISTING DRAINAGE DITCH

0 40 80 120
HORZ: SCALE: 1"=40'
0 10 20 30
VERT: SCALE: 1"=10'

PIPELINE "A" - PLAN

(SCALE: 1" = 40' H)

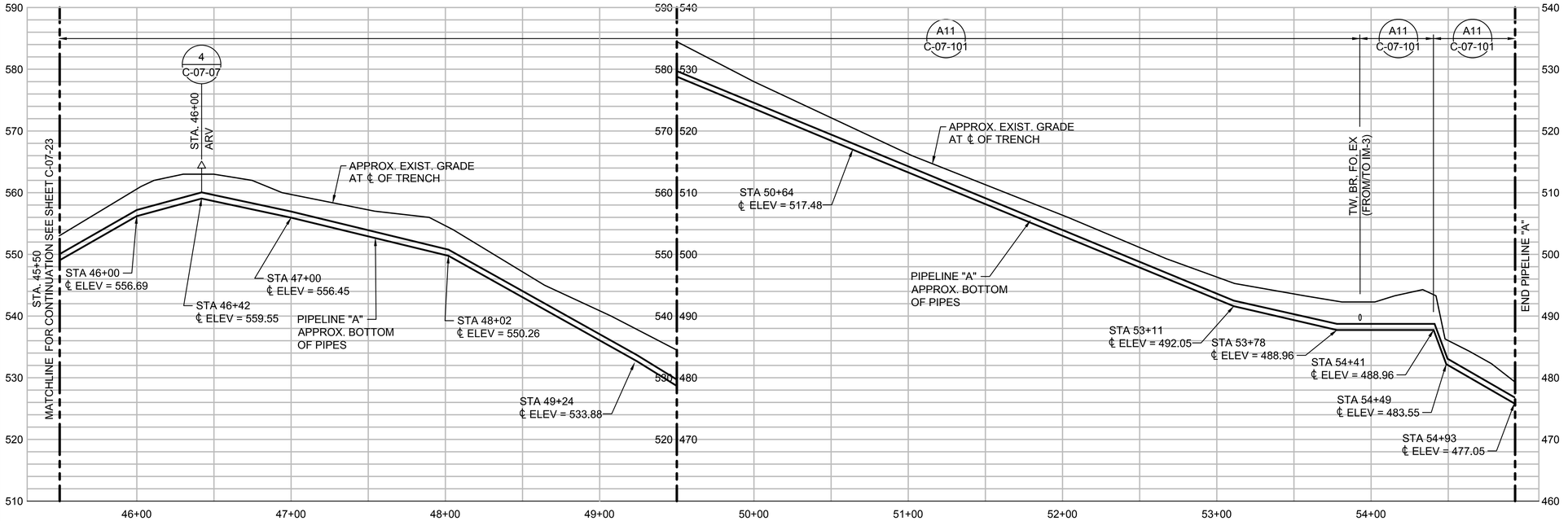

PIPELINE "A" - PROFILE

(SCALE: 1" = 40' H; 1" = 10' V)

- FINAL DESIGN - FOR AGENCY APPROVAL ONLY

REGISTERED PROFESSIONAL ENGINEER
BENJAMIN J. WUESTL
C 67811
EXP 6/30/17
STATE OF CALIFORNIA

NO.	DATE	DESCRIPTION	GM/SPEC	DWN	CHKD	SUPV	APVD BY
4	11/18/15	FINAL DESIGN		AJW	WLM	BW	RAO
3	12/30/14	SUPPLEMENTAL PRE-FINAL (90%) DESIGN		WTH	PT	PT	VMB
2	9/8/14	PRE-FINAL (90%) DESIGN		PH	PT	PT	VMB
1	4/5/13	INTERMEDIATE (60%) DESIGN		PC/EE	PT	PT	VMB
0	11/18/11	PRELIMINARY (30%) DESIGN		EE	PT	PT	VMB

REVISIONS

APPROVED BY: RAO
SO
SUPV
DSGN
DWN
CHKD
OK
DATE
SCALES

TOPOCK GROUNDWATER REMEDIATION PROJECT
PLAN AND PROFILE
PIPELINE "A"
STA 45+50 TO STA 54+93.36
GAS TRANSMISSION & DISTRIBUTION
PACIFIC GAS AND ELECTRIC COMPANY
SAN FRANCISCO, CALIFORNIA

MICROFILM
BILL OF MATL
DWG LIST
SUPSDS
SUPSD BY
SHEET NO. C-07-24 of SHEETS
REV 4

ETIC ENGINEERING
ARCADIS

N1808

11/02/2015, 14:54, G:\Graphics\ARI\TOPOCK-01\Submittal_100%\DWGs\C-Civil\C-07-24.dwg, Tab: C-07-24

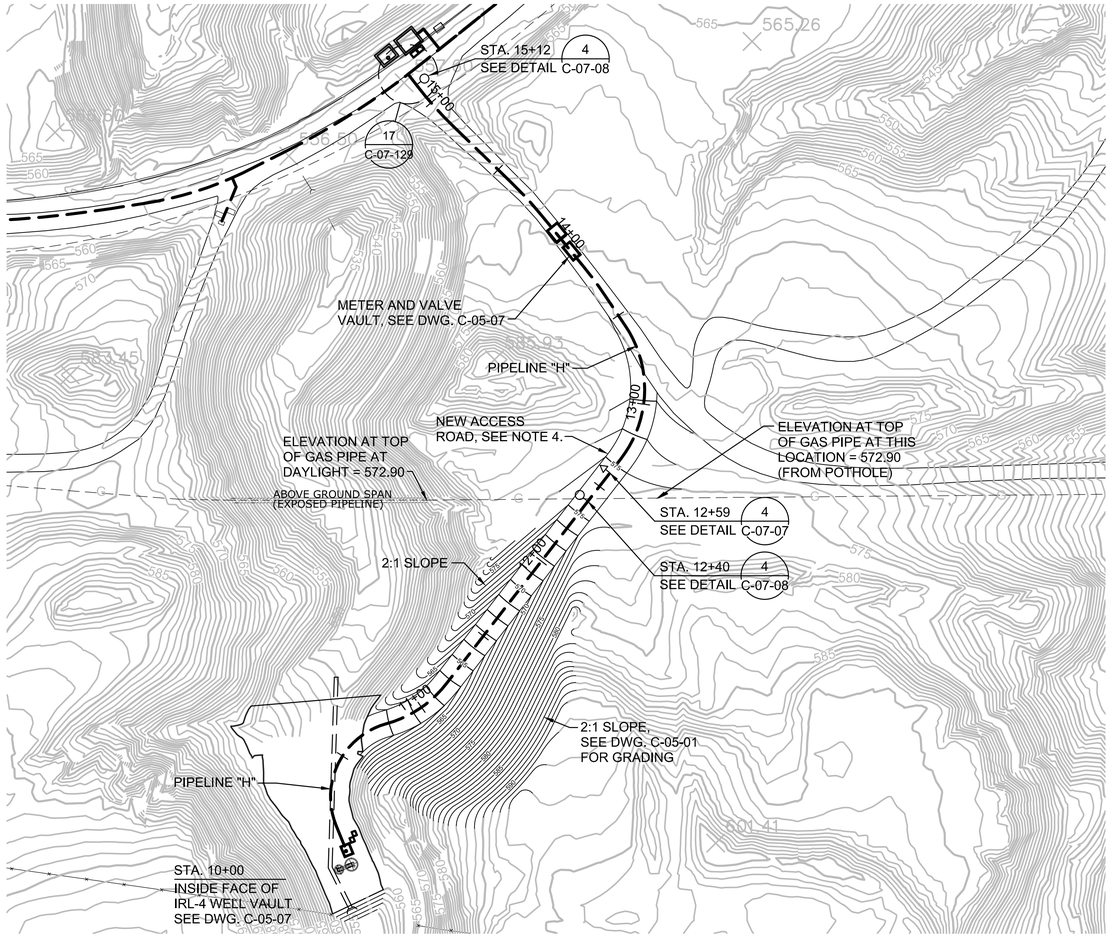

PIPELINE "H" - PLAN

(SCALE: 1" = 40' H)

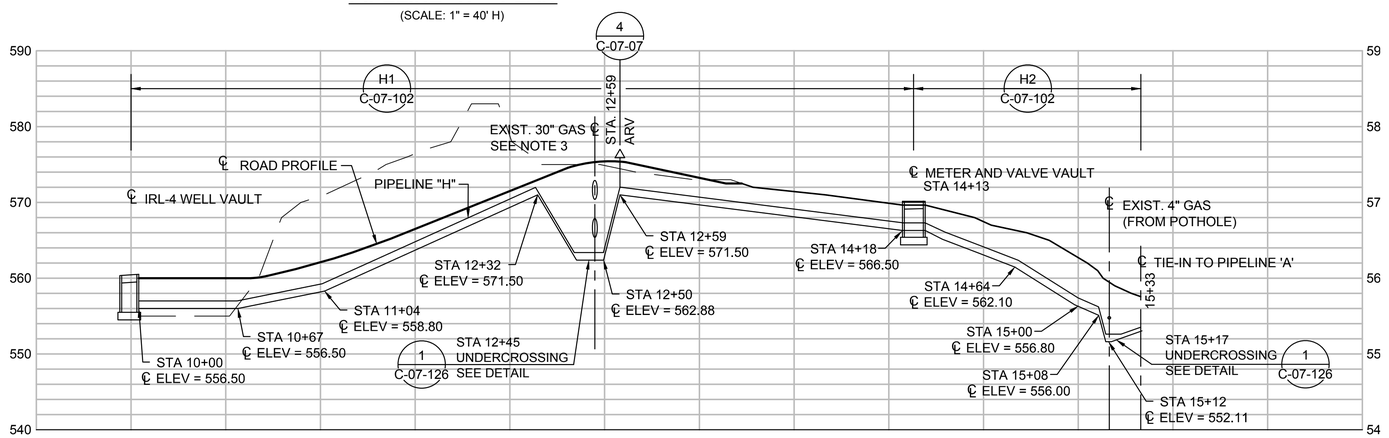

PIPELINE "H" - PROFILE

(SCALE: 1" = 40' H; 1" = 10' V)

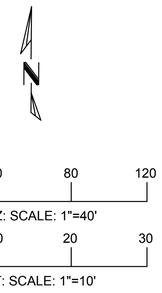

NOTES:

1. THE PIPELINE ALIGNMENT SHOWS CENTER OF TRENCH.
2. ASSUMED DEPTH AND APPROXIMATE LOCATION ARE SHOWN. LOCATE BY POTHOLING BEFORE STARTING CONSTRUCTION. COORDINATE WITH PG&E TO RELOCATE INTERFERING UTILITIES AS NECESSARY TO ACCOMMODATE PIPELINE H.
3. TWO POTENTIAL ELEVATIONS ARE SHOWN FOR THE EXISTING 30 INCH GAS PIPELINE. ONE ELEVATION DENOTES A STRAIGHT LINE INTERPOLATION BETWEEN POTHOLE ELEVATION 35' EAST OF NEW PIPELINE CROSSING AND DAYLIGHT ELEVATION OF PIPE 85' WEST OF NEW PIPELINE CROSSING TOP OF PIPE = 567.88' AND BOTTOM OF PIPE = 565.38. THE OTHER ELEVATION ASSUMES THAT GAS PIPELINE IS LEVEL FROM POTHOLE TO PIPELINE CROSSING AND THAT PIPE DESCENDS AFTER PIPELINE CROSSING. TOP OF PIPE = 572.90 BOTTOM OF PIPE = 570.40. CONTRACTOR SHALL POTHOLE AT NEW PIPELINE CROSSING TO DETERMINE EXACT LOCATION.
4. FOR ACCESS ROAD PLAN, PROFILE AND SECTIONS SEE DRAWINGS C-05-01 & C-05-02

- FINAL DESIGN - FOR AGENCY APPROVAL ONLY

REGISTERED PROFESSIONAL ENGINEER BENJAMIN J. WUERL C 67811 Exp 6/30/17 CIVIL STATE OF CALIFORNIA

NO.	DATE	DESCRIPTION	GM/SPEC	DWN	CHKD	SUPV	APVD BY
4	11/18/15	FINAL DESIGN		AJW	WLM	BW	RAO
3	12/30/14	SUPPLEMENTAL PRE-FINAL (90%) DESIGN		WTH	PT	PT	VMB
2	9/8/14	PRE-FINAL (90%) DESIGN		PH	PT	VMB	VMB
1	4/5/13	INTERMEDIATE (60%) DESIGN		PC	PT	PT	VMB
0	11/18/11	PRELIMINARY (30%) DESIGN		EE	PT	PT	VMB

REVISIONS

APPROVED BY: RAO

SO | SUPV | DSGN | DWN | CHKD | OK | DATE | SCALES

TOPOCK GROUNDWATER REMEDIATION PROJECT

PLAN AND PROFILE PIPELINE "H" STA 10+00 TO STA 15+33

GAS TRANSMISSION & DISTRIBUTION

PACIFIC GAS AND ELECTRIC COMPANY

SAN FRANCISCO, CALIFORNIA

MICROFILM | BILL OF MATL | DWG LIST | SUPSDS | SUPSD BY

SHEET NO. C-07-25 of SHEETS | REV 4

ETIC ENGINEERING | ARCADIS

N1808

11/02/2015, 14:55, G:\Graphics\ART\TOPOCK-01\Submittal_100%\DWGs\C-Civil\C-07-25.dwg, Tab: C-07-25

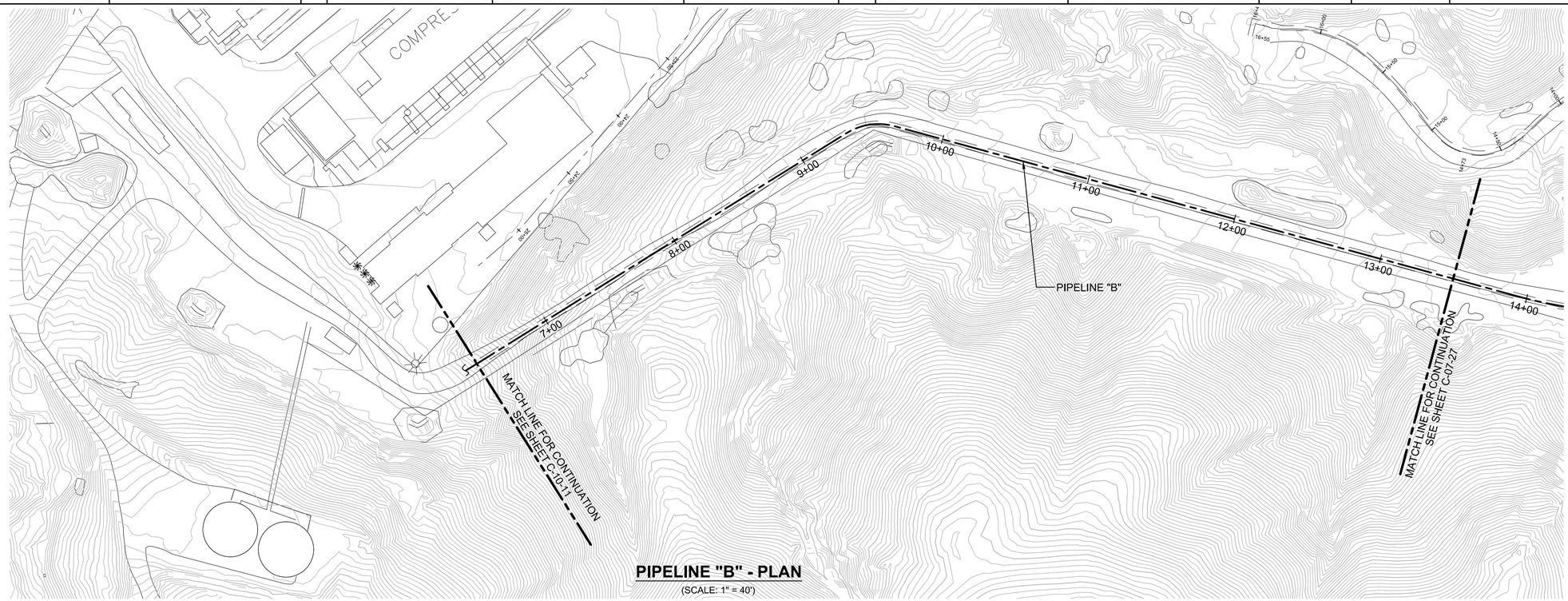

PIPELINE "B" - PLAN

(SCALE: 1" = 40')

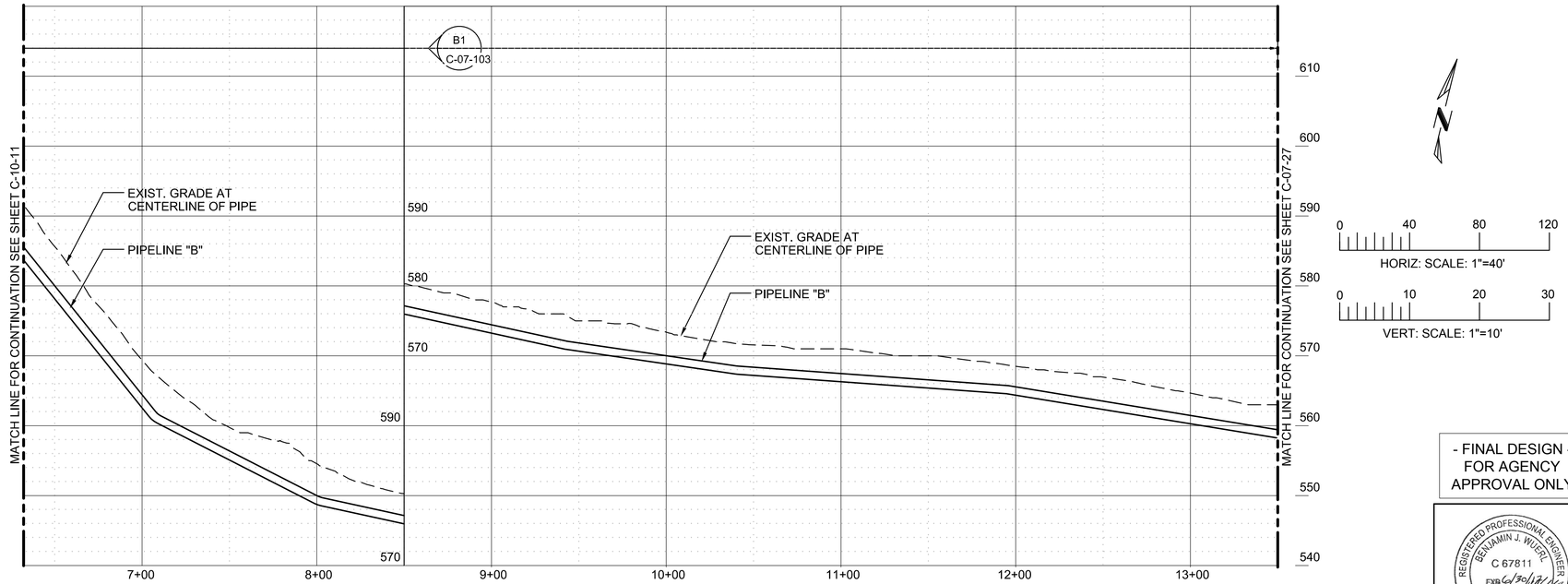

PIPELINE "B" - PROFILE

(SCALE: 1" = 40' H; 1" = 10' V)

- FINAL DESIGN - FOR AGENCY APPROVAL ONLY

REGISTERED PROFESSIONAL ENGINEER
BENJAMIN J. WUGAL
C 67811
EXP 6/30/17
CIVIL
STATE OF CALIFORNIA

ETIC ENGINEERING

ARCADIS

NO.	DATE	DESCRIPTION	GM/SPEC	DWN	CHKD	SUPV	APVD BY
3	11/18/15	FINAL DESIGN	AJW	WLM	BW	RAO	
2	8/5/15	90% RTC RESOLUTION	AJW	KLD	WLM	BJW	
1	9/8/14	PRE-FINAL (90%) DESIGN					
0	4/5/13	INTERMEDIATE (60%) DESIGN					

REVISIONS

APPROVED BY	
RAO	

SO	XXXXX
SUPV	PD
DSGN	GO
DWN	LD
CHKD	JM
OK	PD
DATE	9/8/14
SCALES	1" = 40'-0"

TOPOCK GROUNDWATER REMEDIATION PROJECT

PLAN AND PROFILE PIPELINE "B" STA 3+05 TO STA 13+50

GAS TRANSMISSION & DISTRIBUTION

PACIFIC GAS AND ELECTRIC COMPANY
SAN FRANCISCO, CALIFORNIA

MICROFILM	
BILL OF MATL	
DWG LIST	
SUPSDS	
SUPSD BY	
SHEET NO. of SHEETS	
C-07-26	REV 3

N1808

11/02/2015, 14:56, G:\Graphics\ARIT\TOPOCK-01\Submittal_100%\DWGs\C-Civil\C-07-26.dwg, Tab: C-07-26

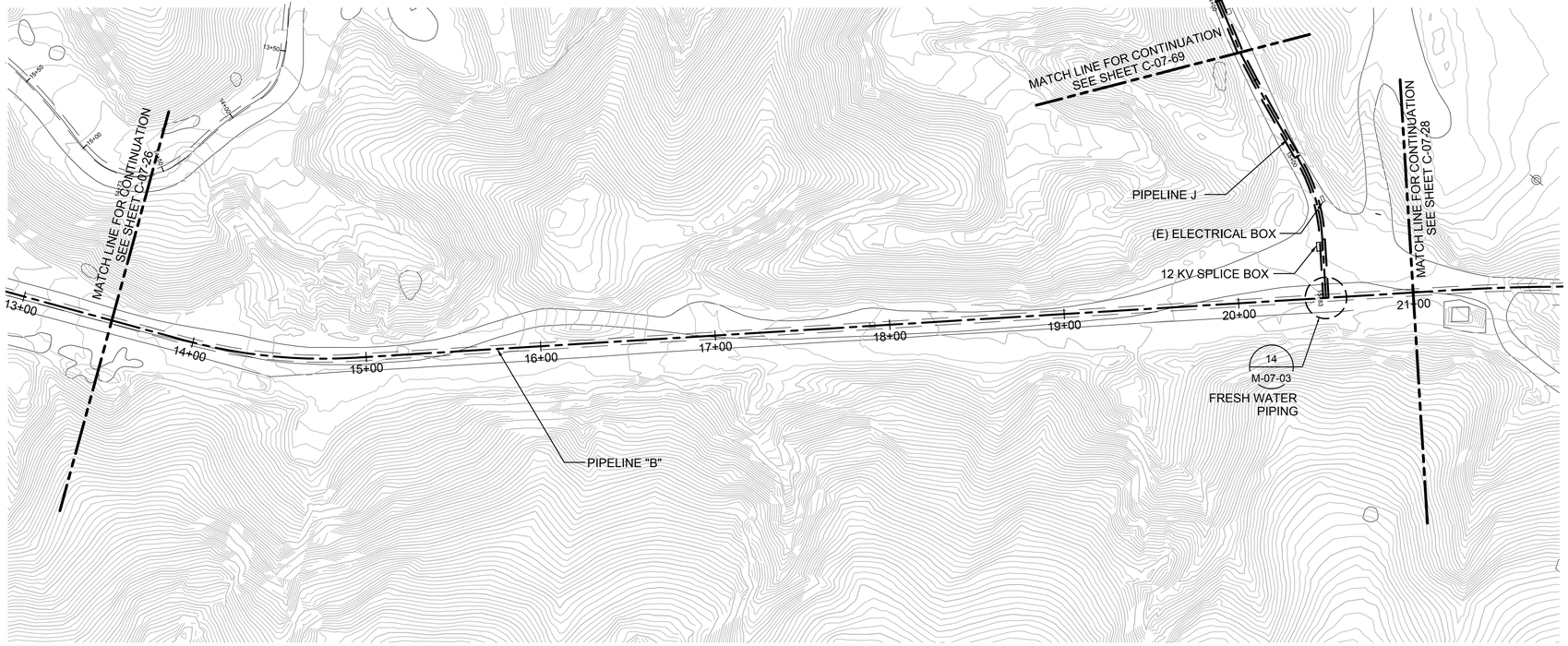

PIPELINE "B" - PLAN

(SCALE: 1" = 40')

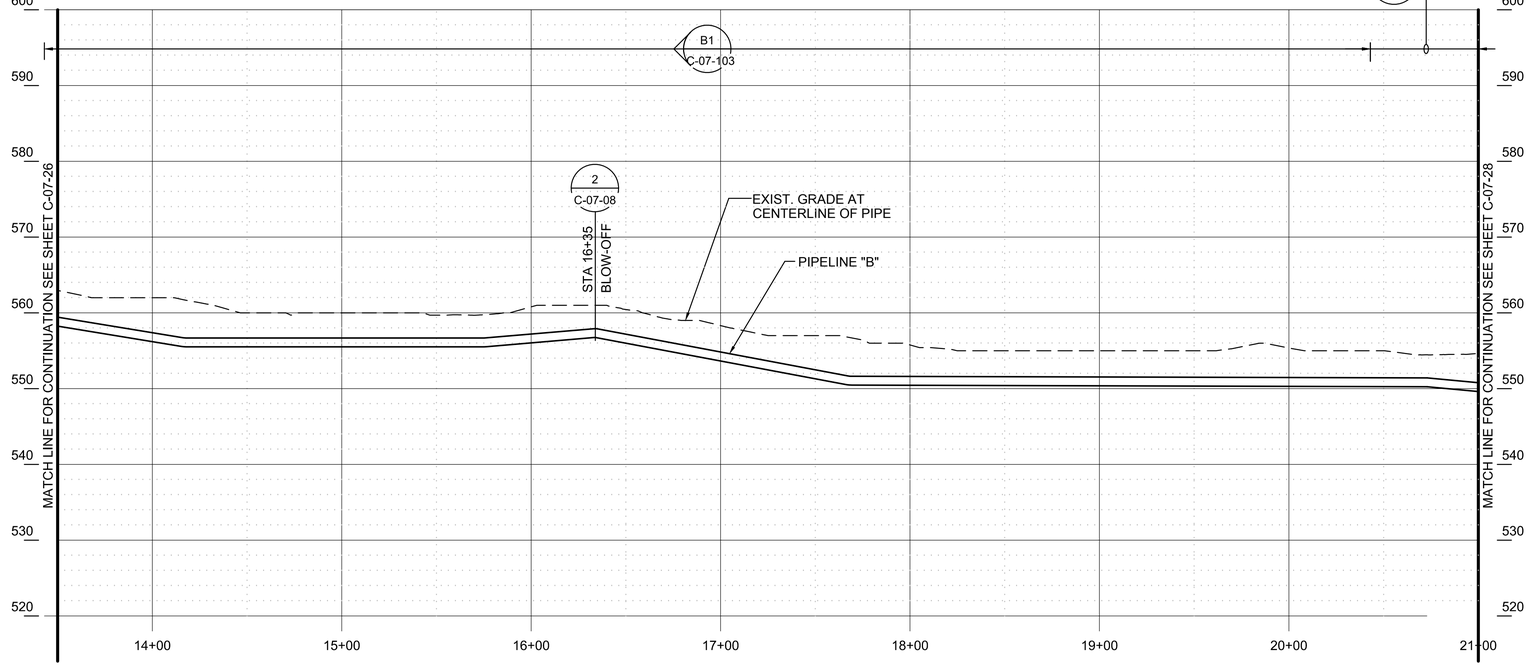

PIPELINE "B" - PROFILE

(SCALE: 1" = 40' H; 1" = 10' V)

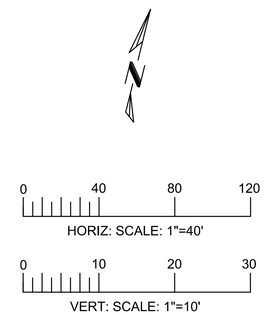

- FINAL DESIGN -
FOR AGENCY
APPROVAL ONLY

REGISTERED PROFESSIONAL ENGINEER
BENJAMIN J. WUERL
C 67811
EXP 6/30/17
CIVIL
STATE OF CALIFORNIA

ETIC ENGINEERING

ARCADIS

NO.	DATE	DESCRIPTION	GM/SPEC	DWN	CHKD	SUPV	APVD BY
3	11/18/15	FINAL DESIGN	AJW	WLM	BW	RAO	
2	8/5/15	90% RTC RESOLUTION	AJW	KLD	WLM	BJW	
1	9/8/14	PRE-FINAL (90%) DESIGN					
0	4/5/13	INTERMEDIATE (60%) DESIGN					

REVISIONS

APPROVED BY	
RAO	SO
	SUPV
	DSGN
	DWN
	CHKD
	OK
	DATE
	SCALES

TOPOCK GROUNDWATER REMEDIATION PROJECT

PLAN AND PROFILE
PIPELINE "B"
STA 13+50 TO STA 21+00

GAS TRANSMISSION & DISTRIBUTION

PACIFIC GAS AND ELECTRIC COMPANY
SAN FRANCISCO, CALIFORNIA

MICROFILM	
BILL OF MATL	
DWG LIST	
SUPSDS	
SUPSD BY	
SHEET NO. of SHEETS	
C-07-27	REV 3

N1808

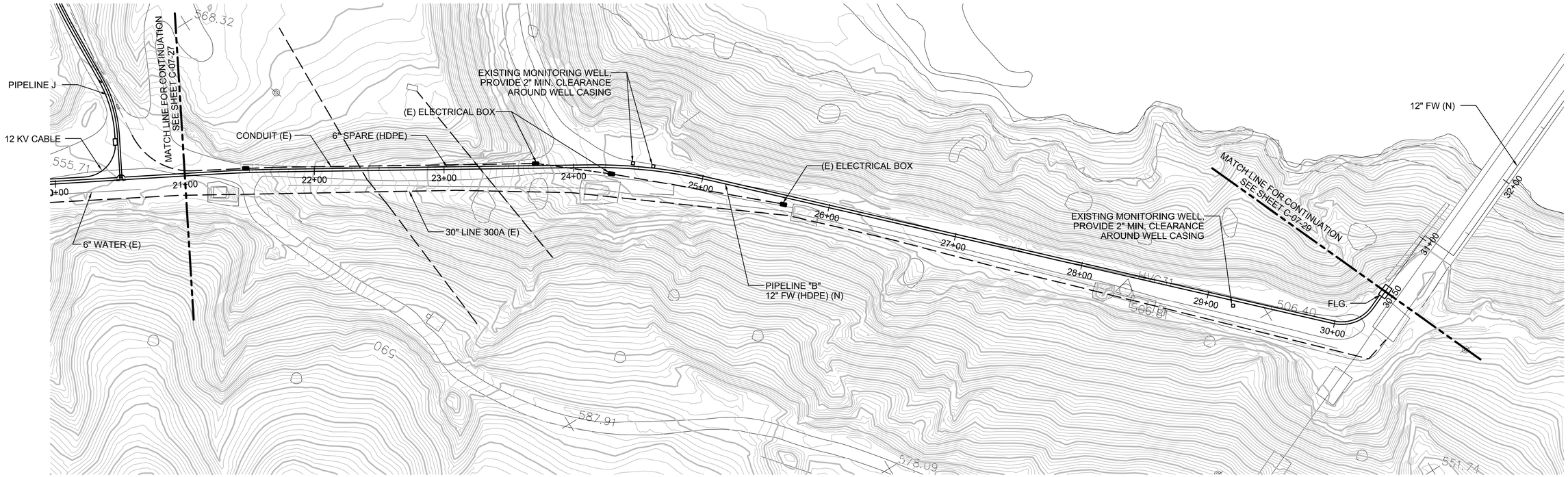

PIPELINE "B" - PLAN

(SCALE: 1" = 40')

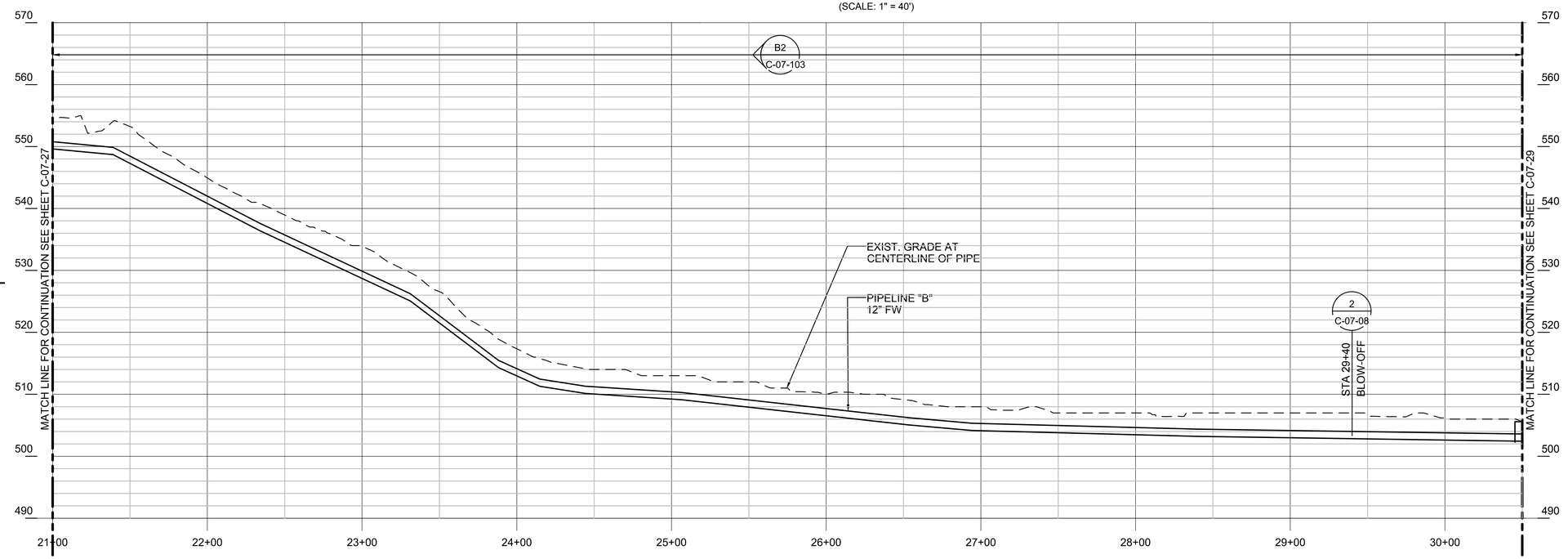

PIPELINE "B" - PROFILE

(SCALE: 1" = 40' H; 1" = 10' V)

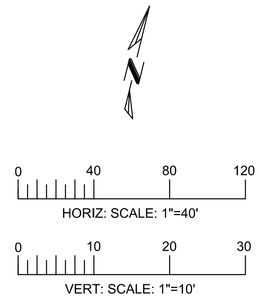

- FINAL DESIGN - FOR AGENCY APPROVAL ONLY

REGISTERED PROFESSIONAL ENGINEER BENJAMIN J. WUERL C 67811 EXP 6/30/17 CIVIL STATE OF CALIFORNIA

ETIC ENGINEERING

ARCADIS

NO.	DATE	DESCRIPTION	GM/SPEC	DWN	CHKD	SUPV	APVD BY
1	11/18/15	FINAL DESIGN	AJW	WLM	BW	RAO	
0	9/8/14	PRE-FINAL (90%) DESIGN					

REVISIONS

APPROVED BY	
RAO	SO
	SUPV
	DSGN
	DWN
	CHKD
	OK
	DATE
	SCALES

TOPOCK GROUNDWATER REMEDIATION PROJECT

PLAN AND PROFILE
PIPELINE "B"
STA 21+00 TO STA 30+50

GAS TRANSMISSION & DISTRIBUTION
PACIFIC GAS AND ELECTRIC COMPANY
SAN FRANCISCO, CALIFORNIA

MICROFILM	
BILL OF MATL	
DWG LIST	
SUPSDS	
SUPSD BY	
SHEET NO. of SHEETS	
C-07-28	REV 1

N1808

NOTE:
1. FOR PIPE SUPPORTS, SEE DRAWINGS C-07-136, C-07-137, C-07-138.

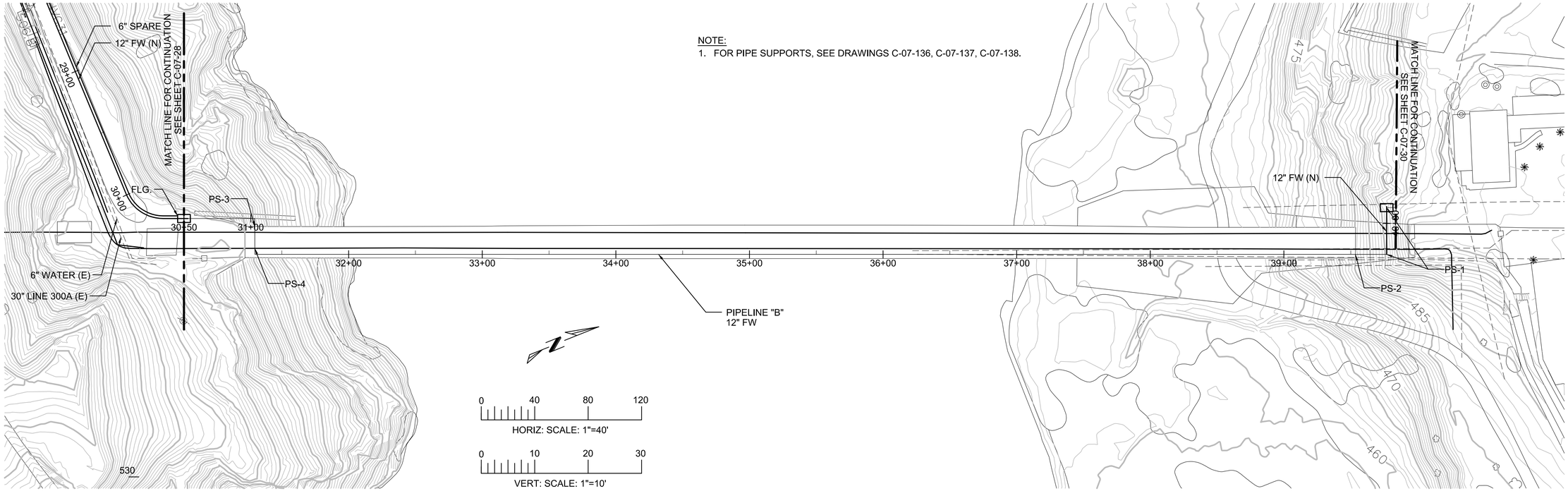

PIPELINE "B" - PLAN

(SCALE: 1" = 40')

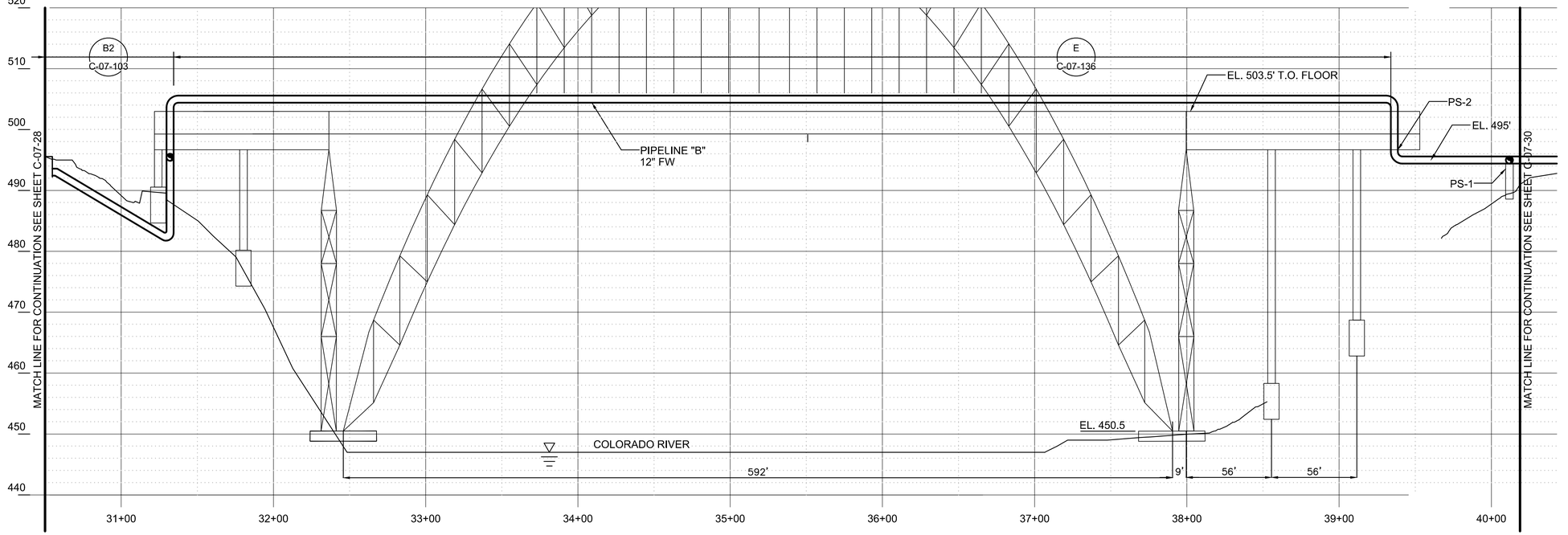

PIPELINE "B" - PROFILE

(SCALE: 1" = 40' H; 1" = 10' V)

- FINAL DESIGN - FOR AGENCY APPROVAL ONLY

REGISTERED PROFESSIONAL ENGINEER BENJAMIN J. WUERL C 67811 EXP 6/30/17 CIVIL STATE OF CALIFORNIA

ETIC ENGINEERING

ARCADIS

NO.	DATE	DESCRIPTION	GM/SPEC	DWN	CHKD	SUPV	APVD BY
1	11/18/15	FINAL DESIGN	AJW	WLM	BW	RAO	
0	9/8/14	PRE-FINAL (90%) DESIGN					

REVISIONS

APPROVED BY	
RAO	SO
	SUPV
	DSGN
	DWN
	CHKD
	OK
	DATE
	SCALES

TOPOCK GROUNDWATER REMEDIATION PROJECT

PLAN AND PROFILE
PIPELINE "B"
STA 30+50 TO STA 40+18.83

GAS TRANSMISSION & DISTRIBUTION
PACIFIC GAS AND ELECTRIC COMPANY
SAN FRANCISCO, CALIFORNIA

MICROFILM	
BILL OF MATL	
DWG LIST	
SUPSDS	
SUPSD BY	
SHEET NO. of SHEETS	
C-07-29	REV 1

N1808

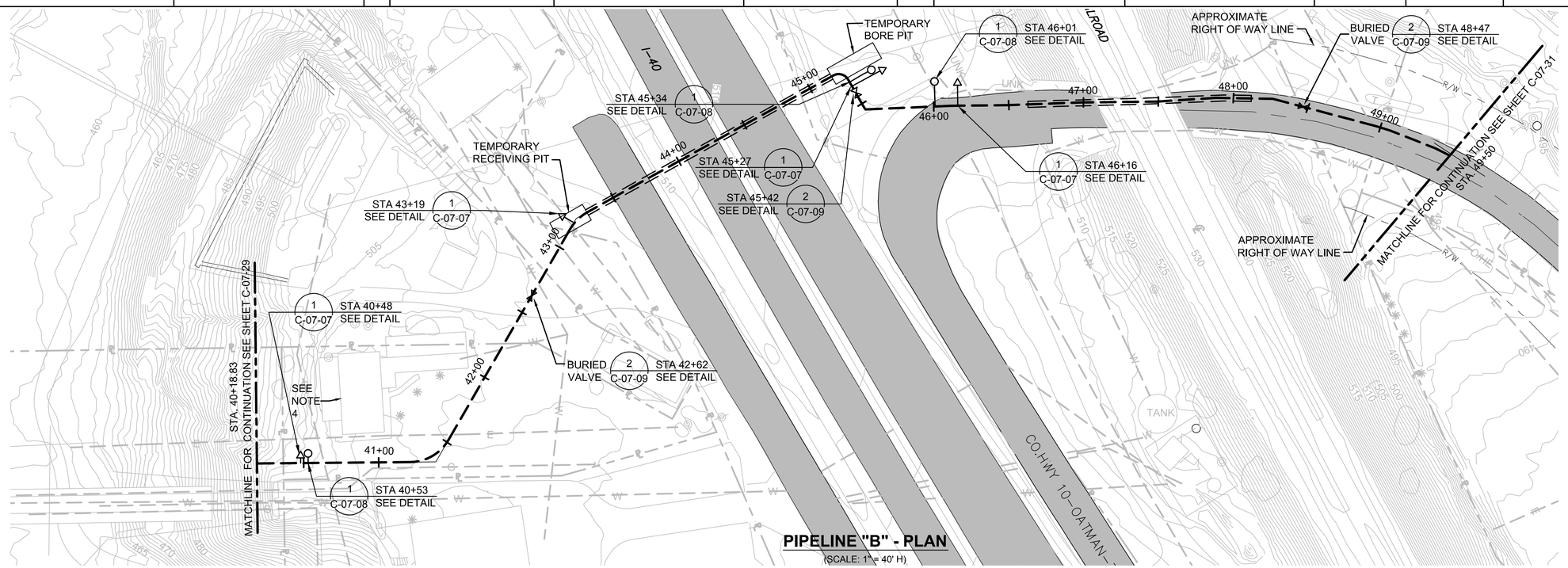

PIPELINE "B" - PLAN

(SCALE: 1" = 40' H)

NOTES:

1. THE PIPELINE ALIGNMENT SHOWS CENTER OF TRENCH.
2. ASSUMED DEPTH AND APPROXIMATE LOCATION ARE SHOWN. LOCATE BY POTHOLING BEFORE STARTING CONSTRUCTION. COORDINATE WITH PG&E TO RELOCATE INTERFERING UTILITIES AS NECESSARY TO ACCOMMODATE PIPELINE B.
3. DESIGN AND PROVIDE CATHODIC PROTECTION AS SPECIFIED IN SECTION 26 42 00.
4. PRESERVE AND PROTECT EXISTING STRUCTURE, TYP.
5. PROVIDE TRAFFIC CONTROL WHEN WORKING IN/NEAR ROADWAYS. COMPLY WITH OWNER'S ENCROACHMENT PERMIT WHEN WORKING IN COUNTY HIGHWAY 10. COMPLY WITH OWNER'S PERMIT FOR WORKING IN RAILROAD RIGHT-OF-WAY.
6. EXTEND 18" DIA. STEEL CASING PIPE ACROSS THE FULL EXTENT OF THE BNSF RIGHT-OF-WAY.

HORZ: SCALE: 1"=40'

VERT: SCALE: 1"=10'

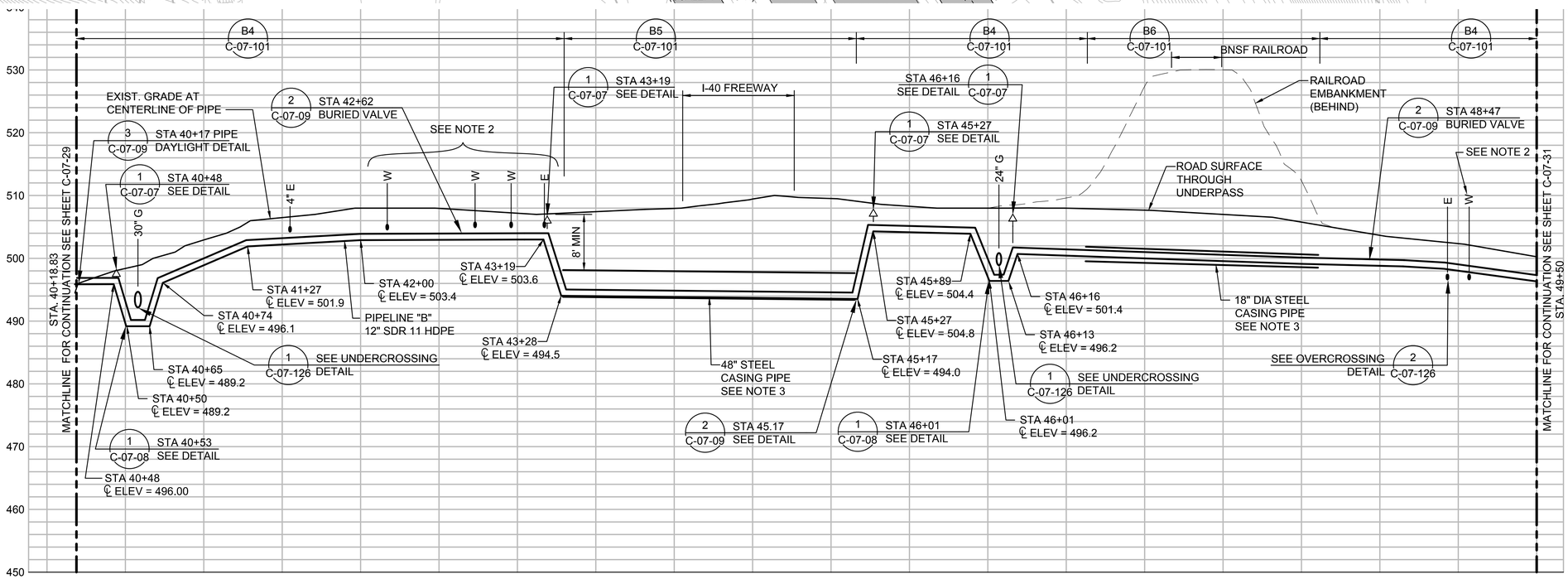

PIPELINE "B" - PROFILE

(SCALE: 1" = 40' H; 1" = 10' V)

- FINAL DESIGN - FOR AGENCY APPROVAL ONLY

Registered Professional Engineer (Civil) CERTIFICATE NO. 39480 BRIAN J. BUBELA Date Signed 10/12/15 ARIZONA U.S.A.

EXPIRES: 9/30/2018

NO.	DATE	DESCRIPTION	GM/SPEC	DWN	CHKD	SUPV	APVD BY
3	11/18/15	FINAL DESIGN		AJW	WLM	BJB	RAO
2	9/8/14	PRE-FINAL (90%) DESIGN		PH	VMB	VMB	VMB
1	4/5/13	INTERMEDIATE (60%) DESIGN		WTH	VMB	VMB	VMB
0	11/18/11	PRELIMINARY (30%) DESIGN		EE	VMB	VMB	VMB

REVISIONS

APPROVED BY: RAO

SO | SUPV | DSGN | DWN | CHKD | OK | DATE | SCALES

TOPOCK GROUNDWATER REMEDIATION PROJECT

PLAN AND PROFILE
PIPELINE "B"
STA 40+18.83 TO STA 49+50

GAS TRANSMISSION & DISTRIBUTION
PACIFIC GAS AND ELECTRIC COMPANY
SAN FRANCISCO, CALIFORNIA

MICROFILM	
BILL OF MATL	
DWG LIST	
SUPSDS	
SUPSD BY	
SHEET NO.	of SHEETS
C-07-30	REV 3

11/11/2015, 14:00, G:\Graphics\ART\TOPOCK-01\Submittal_100%\DWGs\C-Civil\C-07-30.dwg, Tab: C-07-30

N1808

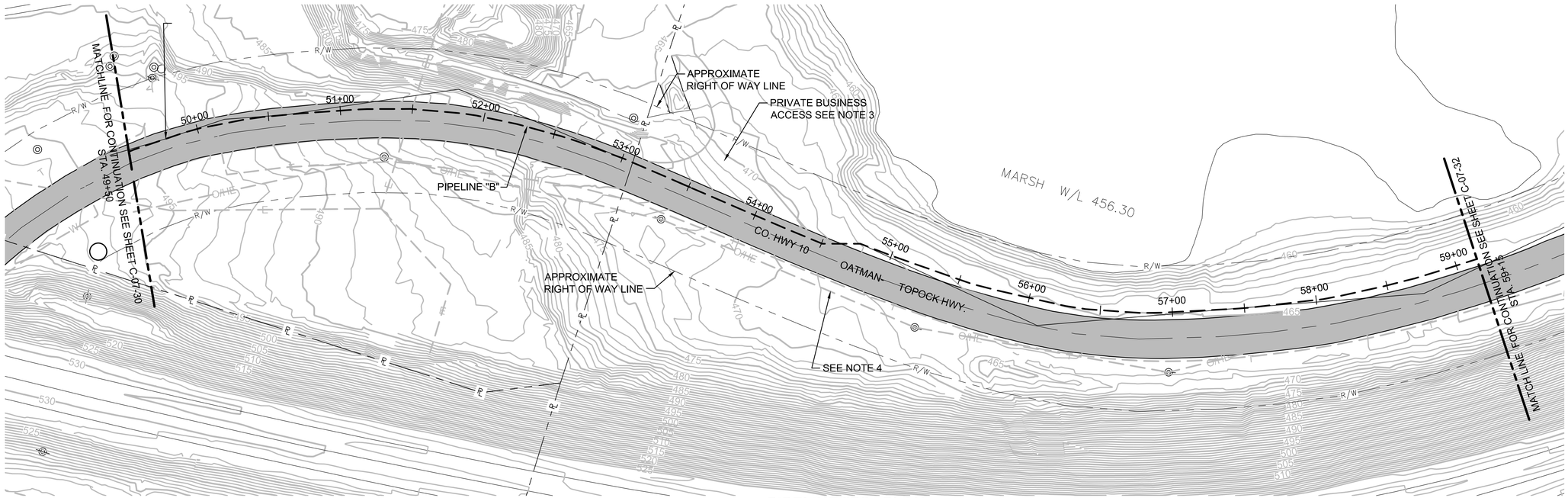

PIPELINE "B" - PLAN

(SCALE: 1" = 40' H)

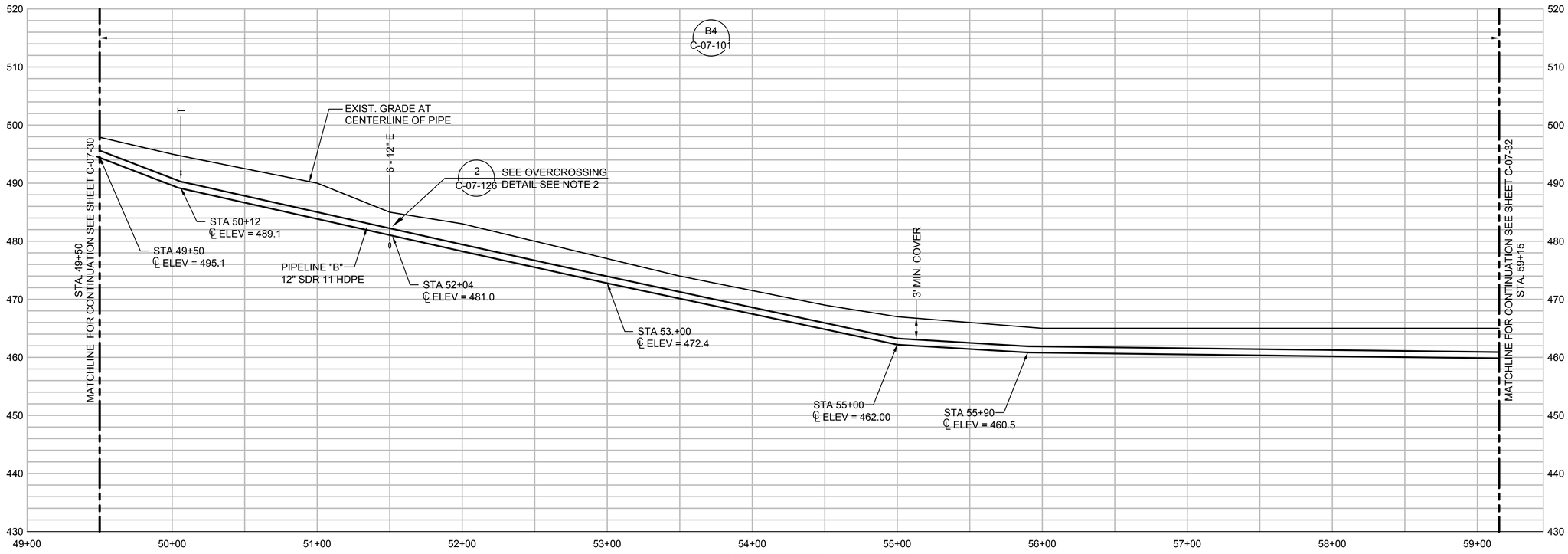

PIPELINE "B" - PROFILE

(SCALE: 1" = 40' H; 1" = 10' V)

NOTES:

1. THE PIPELINE ALIGNMENT SHOWS CENTER OF TRENCH.
2. ASSUMED DEPTH AND APPROXIMATE LOCATION ARE SHOWN. LOCATE BY POTHOLING BEFORE STARTING CONSTRUCTION. COORDINATE WITH PG&E TO RELOCATE INTERFERING UTILITIES AS NECESSARY TO ACCOMMODATE PIPELINE B.
3. MAINTAIN CONTINUOUS ACCESS TO PRIVATE BUSINESS DURING CONSTRUCTION. COORDINATE EXACT REQUIREMENTS IN FIELD WITH OWNER.
4. PRESERVE AND PROTECT STRUCTURES, TYP. MAINTAIN SAFE DISTANCE FROM OVERHEAD ELECTRICAL LINES.
5. PROVIDE TRAFFIC CONTROL WHEN WORKING IN/NEAR ROADWAYS. COMPLY WITH OWNER'S ENCROACHMENT PERMIT WHEN WORKING IN COUNTY HIGHWAY 10.

N

0 40 80 120
HORZ: SCALE: 1"=40'

0 10 20 30
VERT: SCALE: 1"=10'

- FINAL DESIGN - FOR AGENCY APPROVAL ONLY

Registered Professional Engineer (Civil) CERTIFICATE NO. 39480 BRIAN J. BUBELA Date Signed 11/6/2015 ARIZONA, U.S.A.

EXPIRES: 9/30/2018

NO.	DATE	DESCRIPTION	GM/SPEC	DWN	CHKD	SUPV	APVD	BY
3	11/18/15	FINAL DESIGN		AJW	WLM	BJB	RAO	
2	9/8/14	PRE-FINAL (90%) DESIGN		PH	VMB	VMB	VMB	
1	4/5/13	INTERMEDIATE (60%) DESIGN		PC	VMB	VMB	VMB	
0	11/18/11	PRELIMINARY (30%) DESIGN		PC	VMB	VMB	VMB	

REVISIONS

APPROVED BY: RAO

SO | SUPV | DSGN | DWN | CHKD | OK | DATE | SCALES

TOPOCK GROUNDWATER REMEDIATION PROJECT

PLAN AND PROFILE PIPELINE "B" STA 49+50 TO STA 59+15

GAS TRANSMISSION & DISTRIBUTION

PACIFIC GAS AND ELECTRIC COMPANY

SAN FRANCISCO, CALIFORNIA

MICROFILM

BILL OF MATL

DWG LIST

SUPSDS

SUPSD BY

SHEET NO. C-07-31 of SHEETS

REV 3

11/11/2015, 14:03, G:\Graphics\ART\TOPOCK-01\Submittal_100%\DWGs\C-Civil\C-07-31.dwg, Tab: C-07-31

N1808

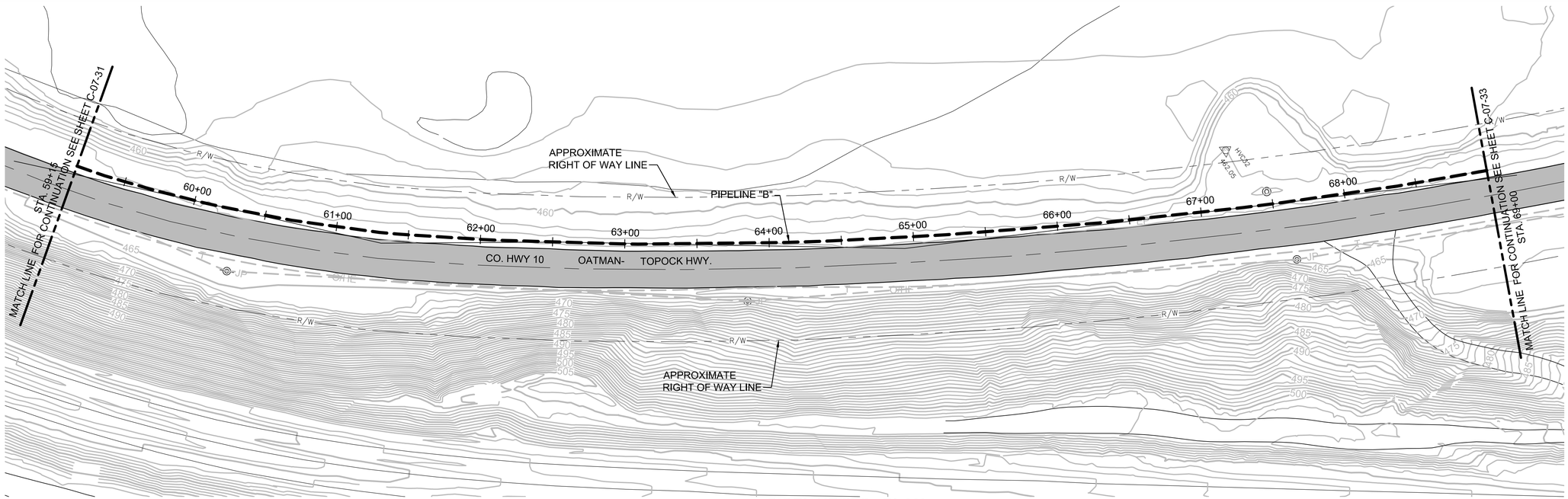

PIPELINE "B" - PLAN

(SCALE: 1" = 40' H)

NOTES:

1. THE PIPELINE ALIGNMENT SHOWS CENTER OF TRENCH.
2. ASSUMED DEPTH AND APPROXIMATE LOCATION ARE SHOWN. LOCATE BY POTHOLING BEFORE STARTING CONSTRUCTION. COORDINATE WITH PG&E TO RELOCATE INTERFERING UTILITIES AS NECESSARY TO ACCOMMODATE PIPELINE B.
3. MAINTAIN CONTINUOUS ACCESS TO PRIVATE BUSINESS DURING CONSTRUCTION. COORDINATE EXACT REQUIREMENTS IN FIELD WITH OWNER.
4. PRESERVE AND PROTECT STRUCTURES, TYP. MAINTAIN SAFE DISTANCE FROM OVERHEAD ELECTRICAL LINES.
5. PROVIDE TRAFFIC CONTROL WHEN WORKING IN/NEAR ROADWAYS. COMPLY WITH OWNER'S ENCROACHMENT PERMIT WHEN WORKING IN COUNTY HIGHWAY 10.

0 40 80 120
HORZ: SCALE: 1"=40'

0 10 20 30
VERT: SCALE: 1"=10'

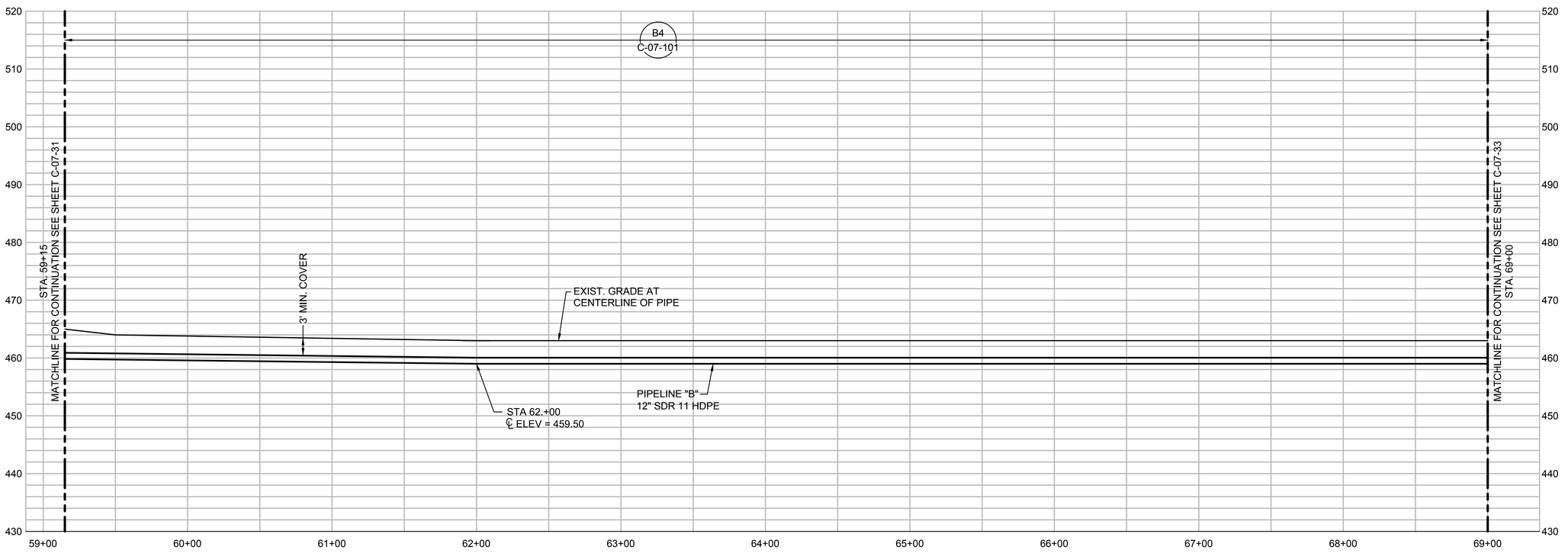

PIPELINE "B" - PROFILE

(SCALE: 1" = 40' H; 1" = 10' V)

- FINAL DESIGN - FOR AGENCY APPROVAL ONLY

Registered Professional Engineer (Civil) BRIAN J. BUBELA 39480 Date Signed 9/2/2015 ARIZONA, U.S.A.

EXPIRES: 9/30/2018

NO.	DATE	DESCRIPTION	GM/SPEC	DWN	CHKD	SUPV	APVD BY
3	11/18/15	FINAL DESIGN		AJW	WLM	BJB	RAO
2	9/8/14	PRE-FINAL (90%) DESIGN		PC	VMB	VMB	VMB
1	4/5/13	INTERMEDIATE (60%) DESIGN		PC	VMB	VMB	VMB
0	11/18/11	PRELIMINARY (30%) DESIGN		PC	VMB	VMB	VMB

REVISIONS

APPROVED BY: RAO

SO | SUPV | DSGN | DWN | CHKD | OK | DATE | SCALES

TOPOCK GROUNDWATER REMEDIATION PROJECT

PLAN AND PROFILE
PIPELINE "B"
STA 59+15 TO STA 69+00
GAS TRANSMISSION & DISTRIBUTION
PACIFIC GAS AND ELECTRIC COMPANY
SAN FRANCISCO, CALIFORNIA

MICROFILM | BILL OF MATL | DWG LIST | SUPSDS | SUPSD BY

SHEET NO. C-07-32 of SHEETS | REV 3

N1808

11/11/2015, 14:07, G:\Graphics\AR\TOPOCK-011\Submittal_100%\IDWGs\C-Civil\C-07-32.dwg, Tab: C-07-32

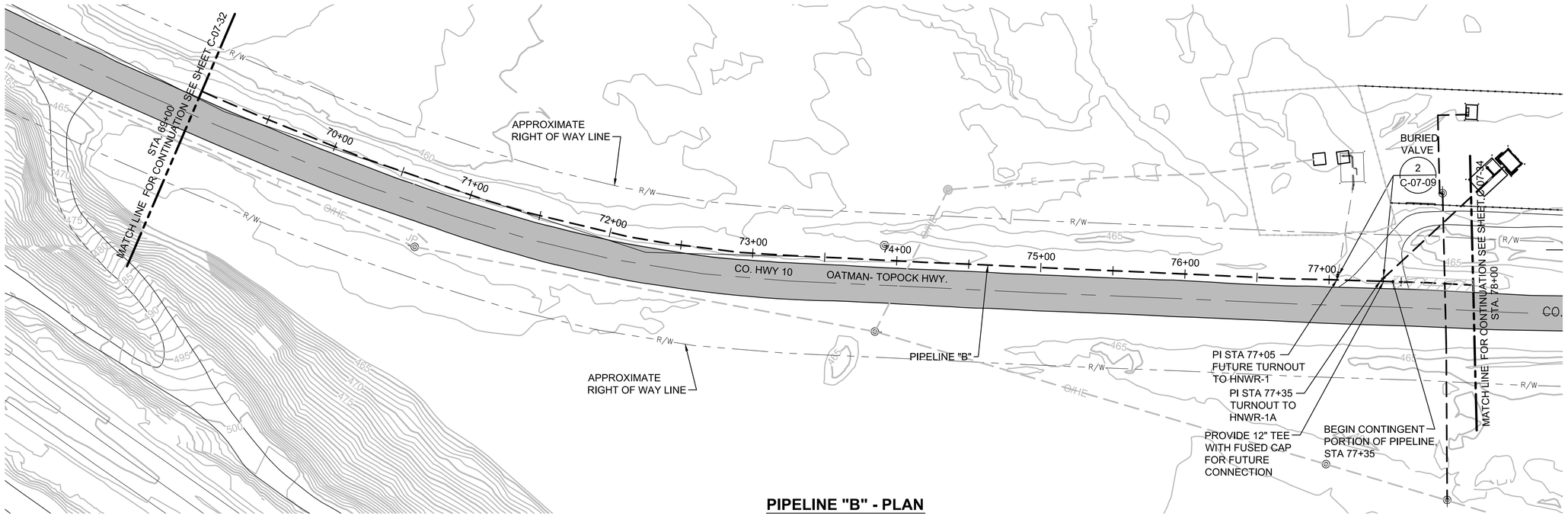

NOTES:

1. THE PIPELINE ALIGNMENT SHOWS CENTER OF TRENCH.
2. ASSUMED DEPTH AND APPROXIMATE LOCATION ARE SHOWN. LOCATE BY POTHOLING BEFORE STARTING CONSTRUCTION. COORDINATE WITH PG&E TO RELOCATE INTERFERING UTILITIES AS NECESSARY TO ACCOMMODATE PIPELINE B.
3. PRESERVE AND PROTECT EXISTING STRUCTURE, TYP.
4. PROVIDE TRAFFIC CONTROL WHEN WORKING IN/NEAR ROADWAYS. COMPLY WITH OWNER'S ENCROACHMENT PERMIT WHEN WORKING IN COUNTY HIGHWAY 10.

0 40 80 120
HORZ: SCALE: 1"=40'

0 10 20 30
VERT: SCALE: 1"=10'

PIPELINE "B" - PLAN

(SCALE: 1" = 40' H)

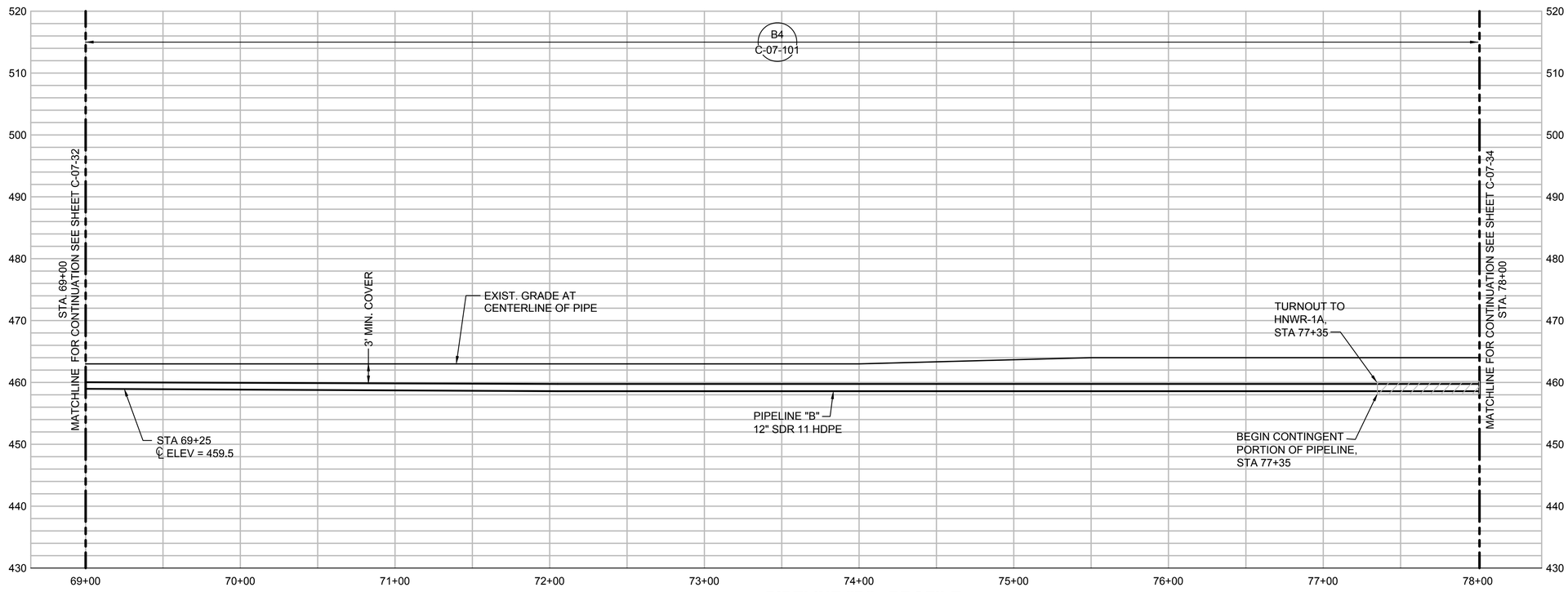

PIPELINE "B" - PROFILE

(SCALE: 1" = 40' H; 1" = 10' V)

NOTE:

THE EQUIPMENT AND FACILITY SHOWN HATCHED IS PART OF A CONTINGENT SYSTEM AND MAY BE CONSTRUCTED IN THE FUTURE.

- FINAL DESIGN - FOR AGENCY APPROVAL ONLY

Registered Professional Engineer (Civil) CERTIFICATE NO. 39480 BRIAN J. BUBELA Date Signed 11/6/2015 ARIZONA, U.S.A.

EXPIRES: 9/30/2018

ETIC ENGINEERING

ARCADIS

NO.	DATE	DESCRIPTION	GM/SPEC	DWN	CHKD	SUPV	APVD	BY
3	11/18/15	FINAL DESIGN		AJW	WLM	BJB	RAO	
2	9/8/14	PRE-FINAL (90%) DESIGN		PH	VMB	VMB	VMB	
1	4/5/13	INTERMEDIATE (60%) DESIGN		PC	VMB	VMB	VMB	
0	11/18/11	PRELIMINARY (30%) DESIGN		PC	VMB	VMB	VMB	

REVISIONS

APPROVED BY	
RAO	SO
	SUPV
	DSGN
	DWN
	CHKD
	OK
	DATE
	SCALES

TOPOCK GROUNDWATER REMEDIATION PROJECT

PLAN AND PROFILE PIPELINE "B" STA 69+00 TO STA 78+00

GAS TRANSMISSION & DISTRIBUTION

PACIFIC GAS AND ELECTRIC COMPANY

SAN FRANCISCO, CALIFORNIA

MICROFILM	
BILL OF MATL	
DWG LIST	
SUPSDS	
SUPSD BY	
SHEET NO.	of SHEETS
C-07-33	REV 3

11/11/2015, 14:04, G:\Graphics\ART\TOPOCK-01\Submittal_100%\DWGs\C-Civil\C-07-33.dwg, Tab: C-07-33

N1808

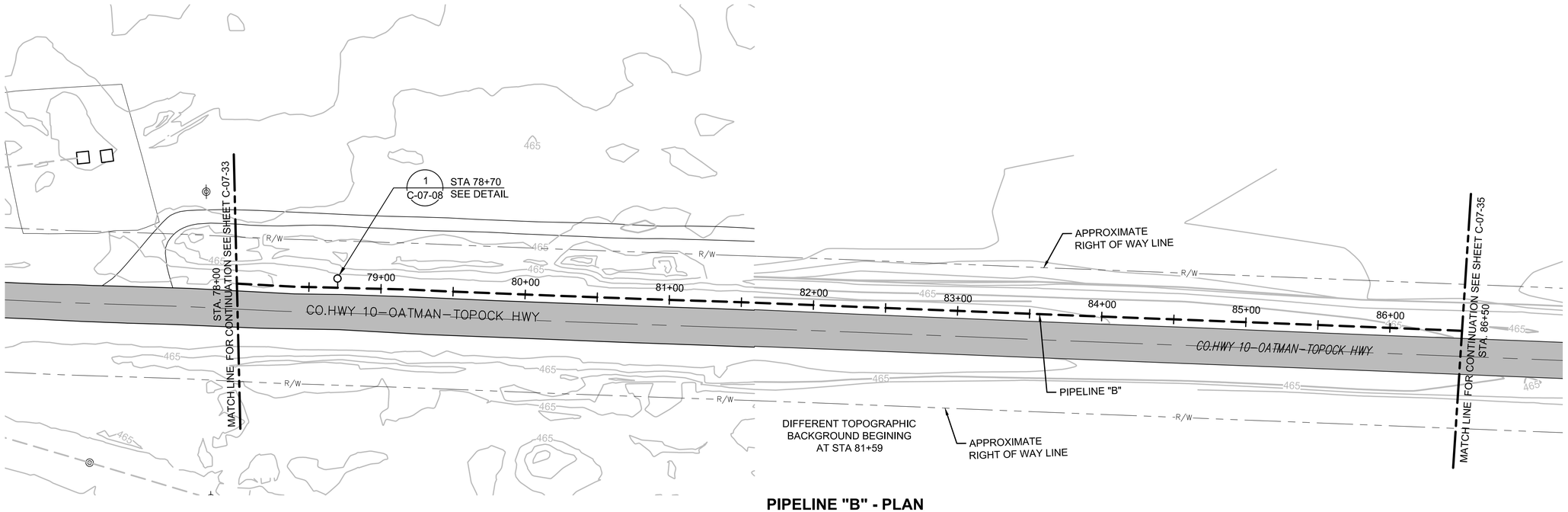

PIPELINE "B" - PLAN

(SCALE: 1" = 40' H)

NOTES:

1. THE PIPELINE ALIGNMENT SHOWS CENTER OF TRENCH.
2. ASSUMED DEPTH AND APPROXIMATE LOCATION ARE SHOWN. LOCATE BY POTHOLING BEFORE STARTING CONSTRUCTION. COORDINATE WITH PG&E TO RELOCATE INTERFERING UTILITIES AS NECESSARY TO ACCOMMODATE PIPELINE B.
3. PRESERVE AND PROTECT EXISTING STRUCTURE, TYP.
4. PROVIDE TRAFFIC CONTROL WHEN WORKING IN/NEAR ROADWAYS. COMPLY WITH OWNER'S ENCROACHMENT PERMIT WHEN WORKING IN COUNTY HIGHWAY 10.

0 40 80 120
HORZ: SCALE: 1"=40'

0 10 20 30
VERT: SCALE: 1"=10'

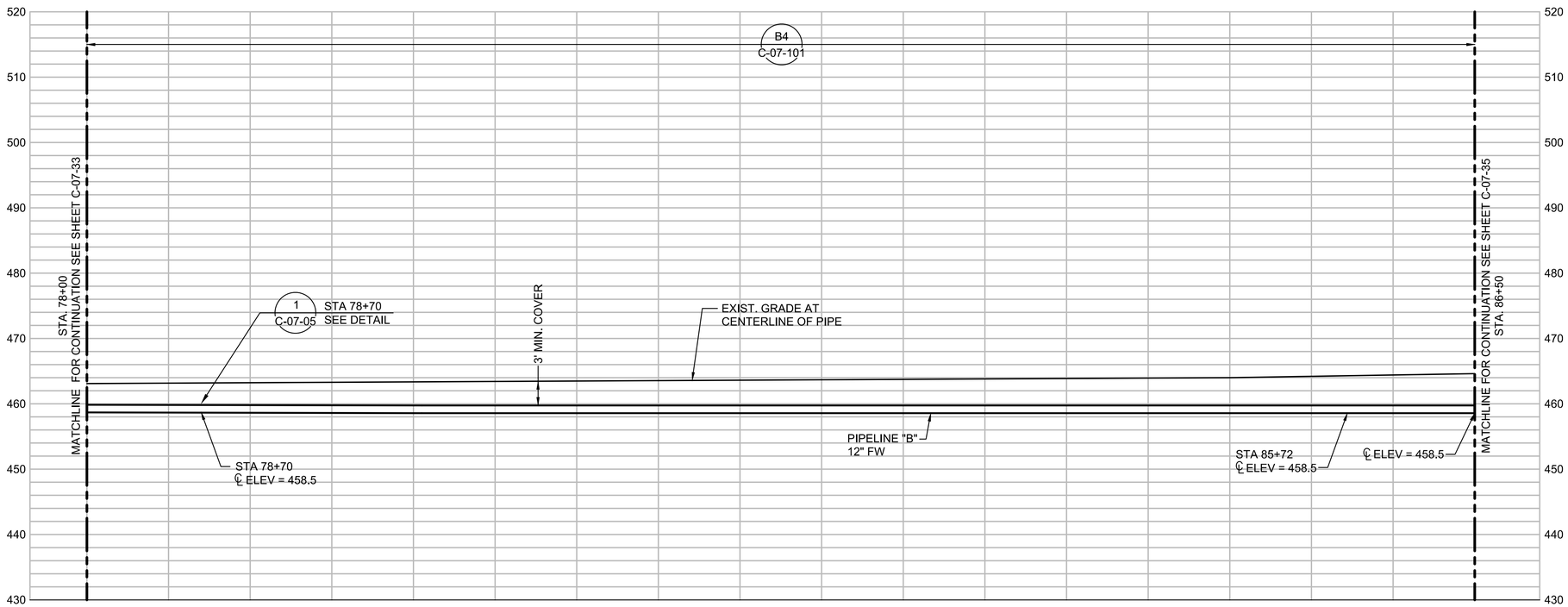

PIPELINE "B" - PROFILE

(SCALE: 1" = 40' H; 1" = 10' V)

NOTE:

THE EQUIPMENT AND FACILITY SHOWN IS PART OF A CONTINGENT SYSTEM AND MAY BE CONSTRUCTED IN THE FUTURE.

CONTINGENT

- FINAL DESIGN - FOR AGENCY APPROVAL ONLY

ETIC ENGINEERING

ARCADIS

NO.	DATE	DESCRIPTION	GM/SPEC	DWN	CHKD	SUPV	APVD BY
1	11/18/15	FINAL DESIGN	AJW	WLM	BJB	RAO	
0	9/8/14	PRE-FINAL (90%) DESIGN	PH	VMB	VMB	VMB	

REVISIONS

APPROVED BY	
RAO	SO
	SUPV
	DSGN
	DWN
	CHKD
	OK
	DATE
	SCALES

TOPOCK GROUNDWATER REMEDIATION PROJECT

PLAN AND PROFILE
PIPELINE "B"
STA 78+00 TO STA 86+50

GAS TRANSMISSION & DISTRIBUTION
PACIFIC GAS AND ELECTRIC COMPANY
SAN FRANCISCO, CALIFORNIA

MICROFILM	
BILL OF MATL	
DWG LIST	
SUPSDS	
SUPSD BY	
SHEET NO.	of SHEETS
C-07-34	REV 1

11/11/2015, 12:21, G:\Graphics\AR\TOPOCK-01\Submittal_100%\DWGs\C-Civil\C-07-34.dwg, Tab: C-07-34

N1808

NOTES:

1. THE PIPELINE ALIGNMENT SHOWS CENTER OF TRENCH.
2. ASSUMED DEPTH AND APPROXIMATE LOCATION ARE SHOWN. LOCATE BY POTHOLING BEFORE STARTING CONSTRUCTION. COORDINATE WITH PG&E TO RELOCATE INTERFERING UTILITIES AS NECESSARY TO ACCOMMODATE PIPELINE B.
3. PRESERVE AND PROTECT EXISTING STRUCTURE, TYP.
4. PROVIDE TRAFFIC CONTROL WHEN WORKING IN/NEAR ROADWAYS. COMPLY WITH OWNER'S ENCROACHMENT PERMIT WHEN WORKING IN COUNTY HIGHWAY 10.

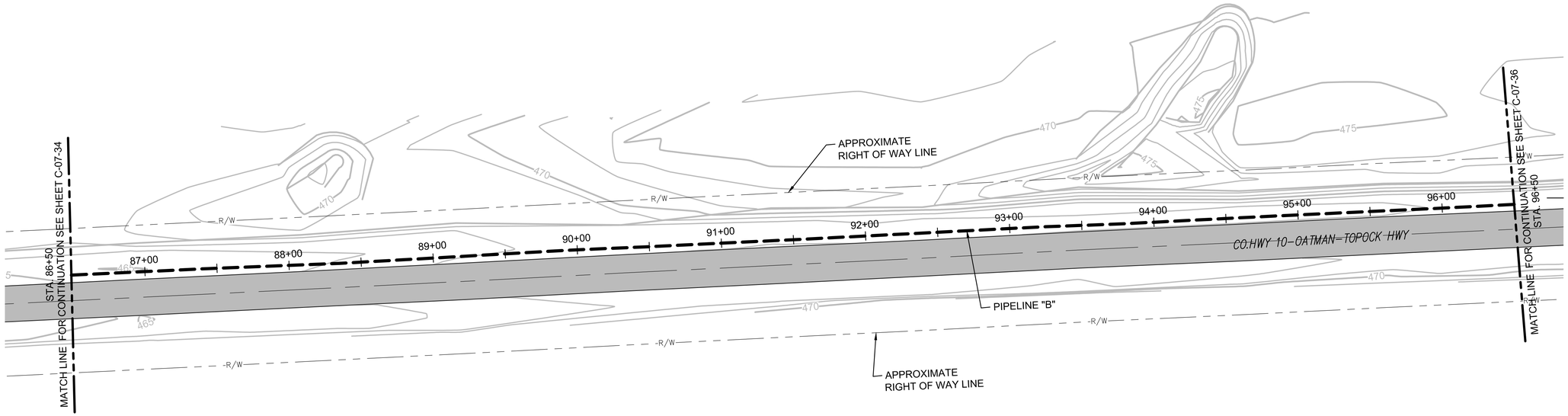

HORZ: SCALE: 1"=40'

VERT: SCALE: 1"=10'

PIPELINE "B" - PLAN

(SCALE: 1" = 40' H)

PIPELINE "B" - PROFILE

(SCALE: 1" = 40' H; 1" = 10' V)

NOTE:

THE EQUIPMENT AND FACILITY SHOWN IS PART OF A CONTINGENT SYSTEM AND MAY BE CONSTRUCTED IN THE FUTURE.

CONTINGENT

- FINAL DESIGN - FOR AGENCY APPROVAL ONLY

ETIC ENGINEERING

ARCADIS

NO.	DATE	DESCRIPTION	GM/SPEC	DWN	CHKD	SUPV	APVD BY
1	11/18/15	FINAL DESIGN	AJW	WLM	BJB	RAO	
0	9/8/14	PRE-FINAL (90%) DESIGN	PH	VMB	VMB	VMB	

REVISIONS

APPROVED BY	
RAO	SO
	SUPV
	DSGN
	DWN
	CHKD
	OK
	DATE
	SCALES

TOPOCK GROUNDWATER REMEDIATION PROJECT

PLAN AND PROFILE
PIPELINE "B"
STA 86+50 TO STA 96+50

GAS TRANSMISSION & DISTRIBUTION
PACIFIC GAS AND ELECTRIC COMPANY
SAN FRANCISCO, CALIFORNIA

MICROFILM	
BILL OF MATL	
DWG LIST	
SUPSDS	
SUPSD BY	
SHEET NO.	of SHEETS
C-07-35	REV 1

11/11/2015, 12:21, G:\Graphics\ARI\TOPOCK-01\Submittal_100%\DWGs\C-Civil\C-07-35.dwg, Tab: C-07-35

N1808

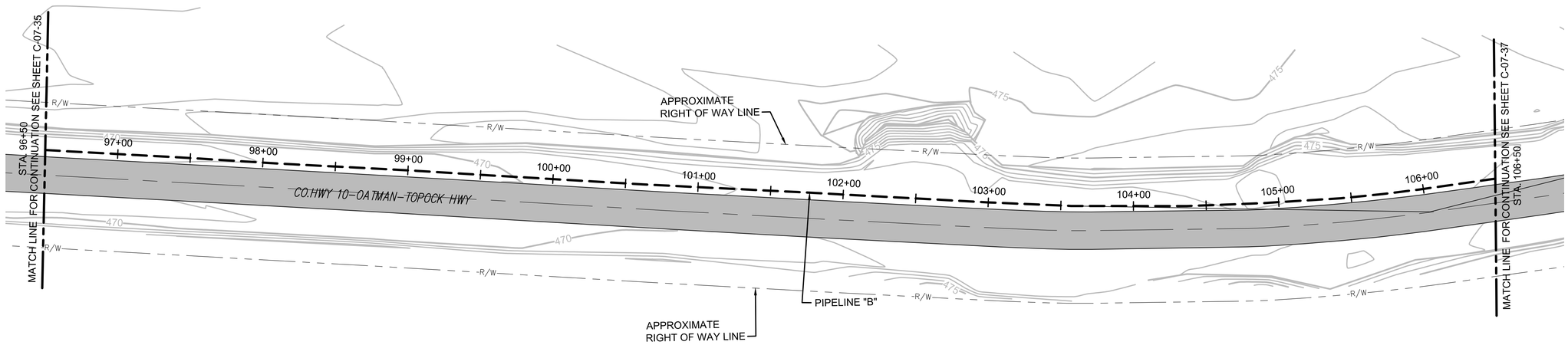

NOTES:

1. THE PIPELINE ALIGNMENT SHOWS CENTER OF TRENCH.
2. ASSUMED DEPTH AND APPROXIMATE LOCATION ARE SHOWN. LOCATE BY POTHOLING BEFORE STARTING CONSTRUCTION. COORDINATE WITH PG&E TO RELOCATE INTERFERING UTILITIES AS NECESSARY TO ACCOMMODATE PIPELINE B.
3. PRESERVE AND PROTECT EXISTING STRUCTURE, TYP.
4. PROVIDE TRAFFIC CONTROL WHEN WORKING IN/NEAR ROADWAYS. COMPLY WITH OWNER'S ENCROACHMENT PERMIT WHEN WORKING IN COUNTY HIGHWAY 10.

0 40 80 120
HORZ: SCALE: 1"=40'

0 10 20 30
VERT: SCALE: 1"=10'

PIPELINE "B" - PLAN

(SCALE: 1" = 40' H)

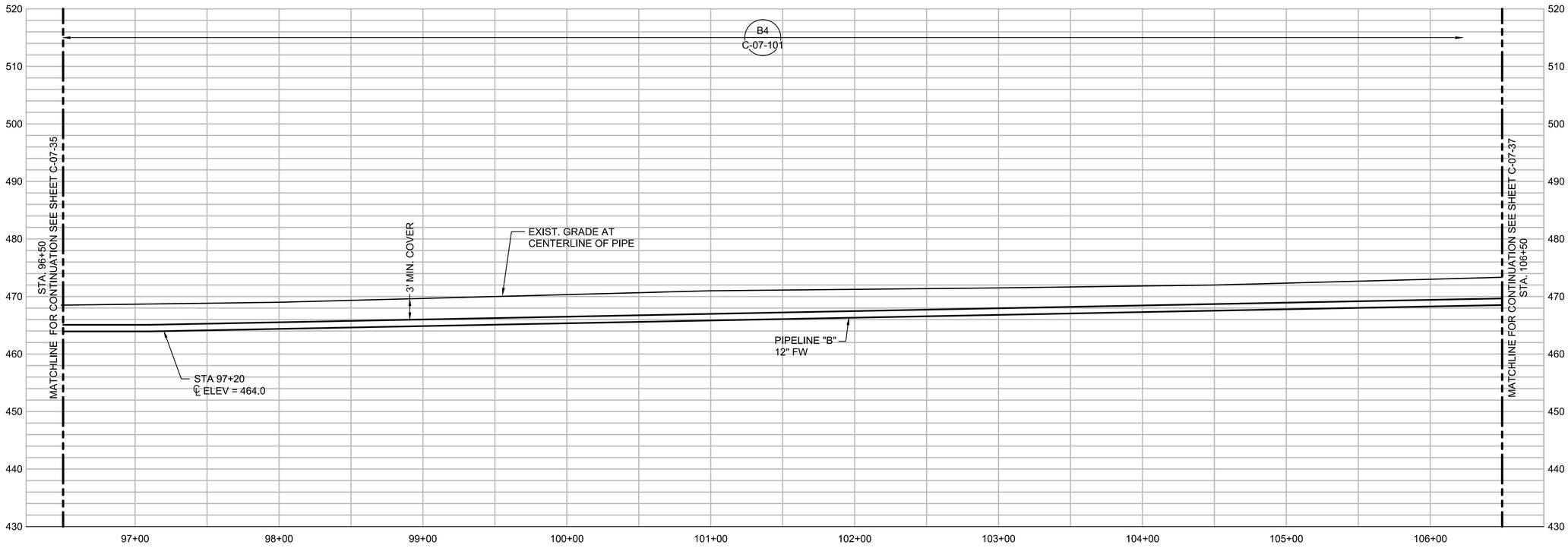

PIPELINE "B" - PROFILE

(SCALE: 1" = 40' H; 1" = 10' V)

NOTE:

THE EQUIPMENT AND FACILITY SHOWN IS PART OF A CONTINGENT SYSTEM AND MAY BE CONSTRUCTED IN THE FUTURE.

CONTINGENT

- FINAL DESIGN - FOR AGENCY APPROVAL ONLY

ETIC ENGINEERING

ARCADIS

NO.	DATE	DESCRIPTION	GM/SPEC	DWN	CHKD	SUPV	APVD BY
1	11/18/15	FINAL DESIGN		AJW	WLM	BJB	RAO
0	9/8/14	PRE-FINAL (90%) DESIGN		PH	VMB	VMB	VMB

REVISIONS

APPROVED BY	
RAO	SO
	SUPV
	DSGN
	DWN
	CHKD
	OK
	DATE
	SCALES

TOPOCK GROUNDWATER REMEDIATION PROJECT

PLAN AND PROFILE
PIPELINE "B"
STA 96+50 TO STA 106+50

GAS TRANSMISSION & DISTRIBUTION
PACIFIC GAS AND ELECTRIC COMPANY
SAN FRANCISCO, CALIFORNIA

MICROFILM	
BILL OF MATL	
DWG LIST	
SUPSDS	
SUPSD BY	
SHEET NO.	of SHEETS
C-07-36	REV 1

11/11/2015, 12:21, G:\Graphics\ARI\TOPOCK-01\Submittal_100%\DWGs\C-Civil\C-07-36.dwg, Tab: C-07-36

N1808

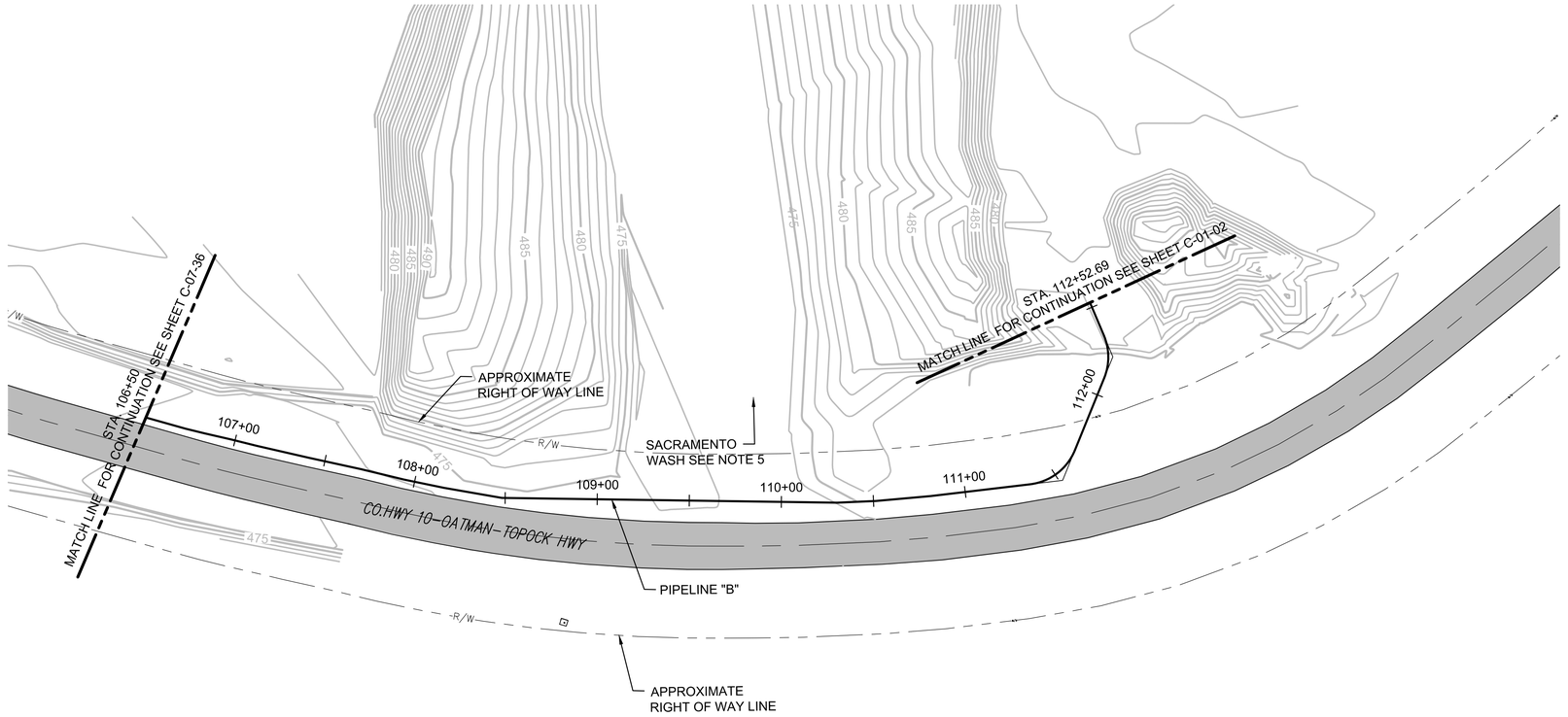

PIPELINE "B" - PLAN

(SCALE: 1" = 40' H)

NOTES:

1. THE PIPELINE ALIGNMENT SHOWS CENTER OF TRENCH.
2. ASSUMED DEPTH AND APPROXIMATE LOCATION ARE SHOWN. LOCATE BY POTHOLING BEFORE STARTING CONSTRUCTION. COORDINATE WITH PG&E TO RELOCATE INTERFERING UTILITIES AS NECESSARY TO ACCOMMODATE PIPELINE B.
3. PRESERVE AND PROTECT EXISTING STRUCTURE, TYP.
4. PROVIDE TRAFFIC CONTROL WHEN WORKING IN/NEAR ROADWAYS. COMPLY WITH OWNER'S ENCROACHMENT PERMIT WHEN WORKING IN COUNTY HIGHWAY 10.
5. SURVEY TOPOGRAPHY OF SACRAMENTO WASH AND SURROUNDING AREA. SUBMIT SURVEY MAP AND CAD FILE FOR OWNER REVIEW. DO NOT START CONSTRUCTION WITHOUT OWNER APPROVAL.

0 40 80 120

HORZ: SCALE: 1"=40'

0 10 20 30

VERT: SCALE: 1"=10'

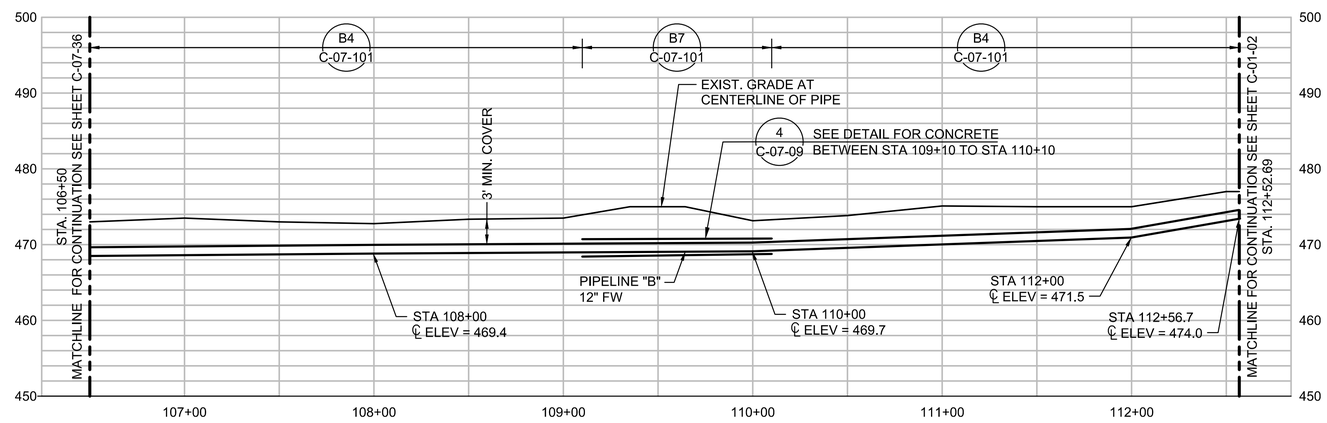

PIPELINE "B" - PROFILE

(SCALE: 1" = 40' H; 1" = 10' V)

NOTE:

THE EQUIPMENT AND FACILITY SHOWN IS PART OF A CONTINGENT SYSTEM AND MAY BE CONSTRUCTED IN THE FUTURE.

CONTINGENT

- FINAL DESIGN - FOR AGENCY APPROVAL ONLY

ETIC ENGINEERING

ARCADIS

NO.	DATE	DESCRIPTION	GM/SPEC	DWN	CHKD	SUPV	APVD BY
1	11/18/15	FINAL DESIGN	AJW	WLM	BJB	RAO	
0	9/8/14	PRE-FINAL (90%) DESIGN	PH	VMB	VMB	VMB	

REVISIONS

APPROVED BY	
RAO	SO
	SUPV
	DSGN
	DWN
	CHKD
	OK
	DATE
	SCALES

TOPOCK GROUNDWATER REMEDIATION PROJECT

PLAN AND PROFILE
PIPELINE "B"
STA 106+50 TO STA 112+52.69

GAS TRANSMISSION & DISTRIBUTION
PACIFIC GAS AND ELECTRIC COMPANY
SAN FRANCISCO, CALIFORNIA

MICROFILM	
BILL OF MATL	
DWG LIST	
SUPSDS	
SUPSD BY	
SHEET NO. of SHEETS	
C-07-37	REV 1

N1608

11/11/2015, 12:20, G:\Graphics\AR\TOPOCK-01\Submittal_100%\DWGs\C-Civil\C-07-37.dwg, Tab: C-07-37

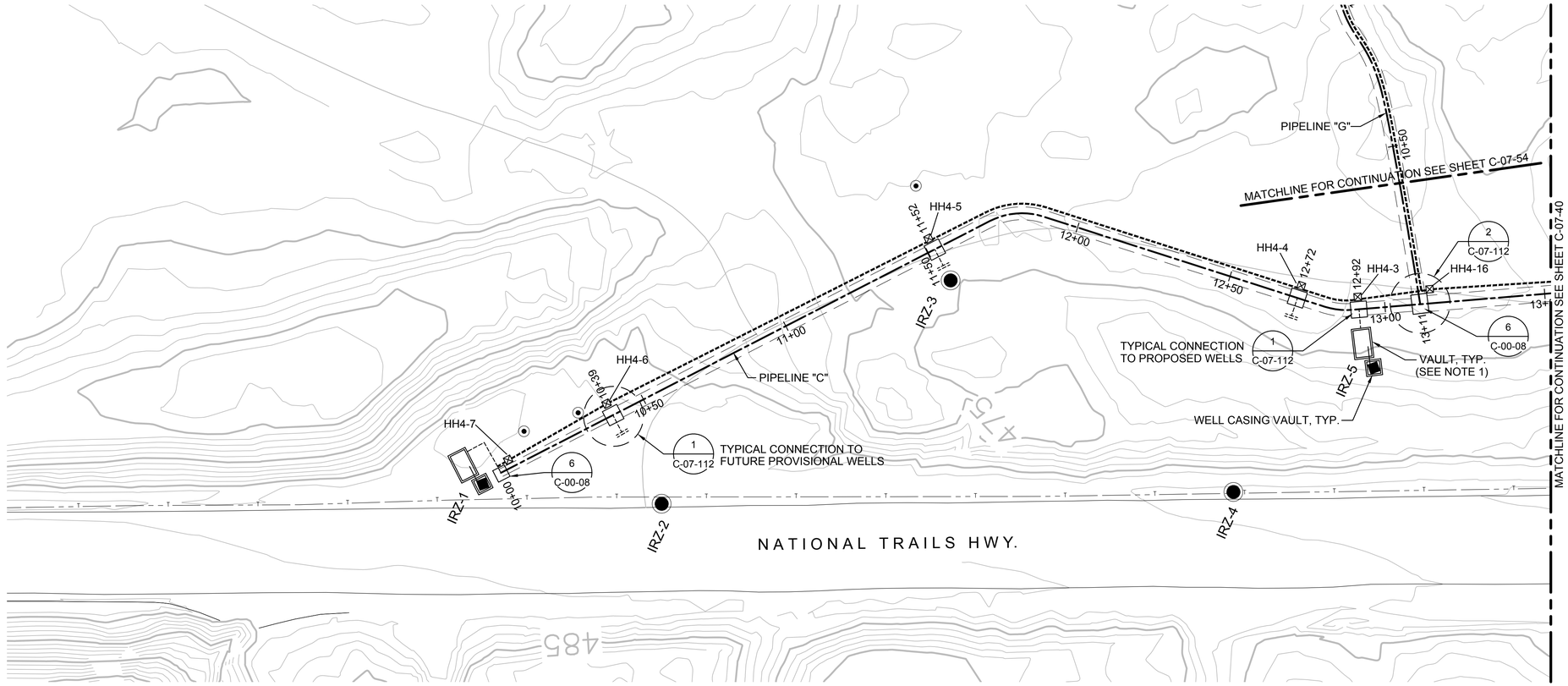

NOTES:

1. VAULT DETAILS SHOWN IN AREA 4 OF THE MECHANICAL AND STRUCTURAL DRAWINGS.
2. SEE CONDUIT AND CABLE SCHEDULES AND SINGLE LINE DIAGRAMS ON SHEETS E-00-12 THRU E-00-20.
3. CLEANOUT LOCATIONS PROVIDE CLEANOUT PIPING FOR ALL INJECTION, EXTRACTION, BACKWASH, AND REMEDY-PRODUCED WATER LINES AT INDICATED LOCATIONS (SEE DETAIL C-00-08).

0 20 40 60
HORIZ: SCALE: 1"=20'

0 10 20 30
VERT: SCALE: 1"=10'

PIPELINE "C" - PLAN

(SCALE: 1" = 20')

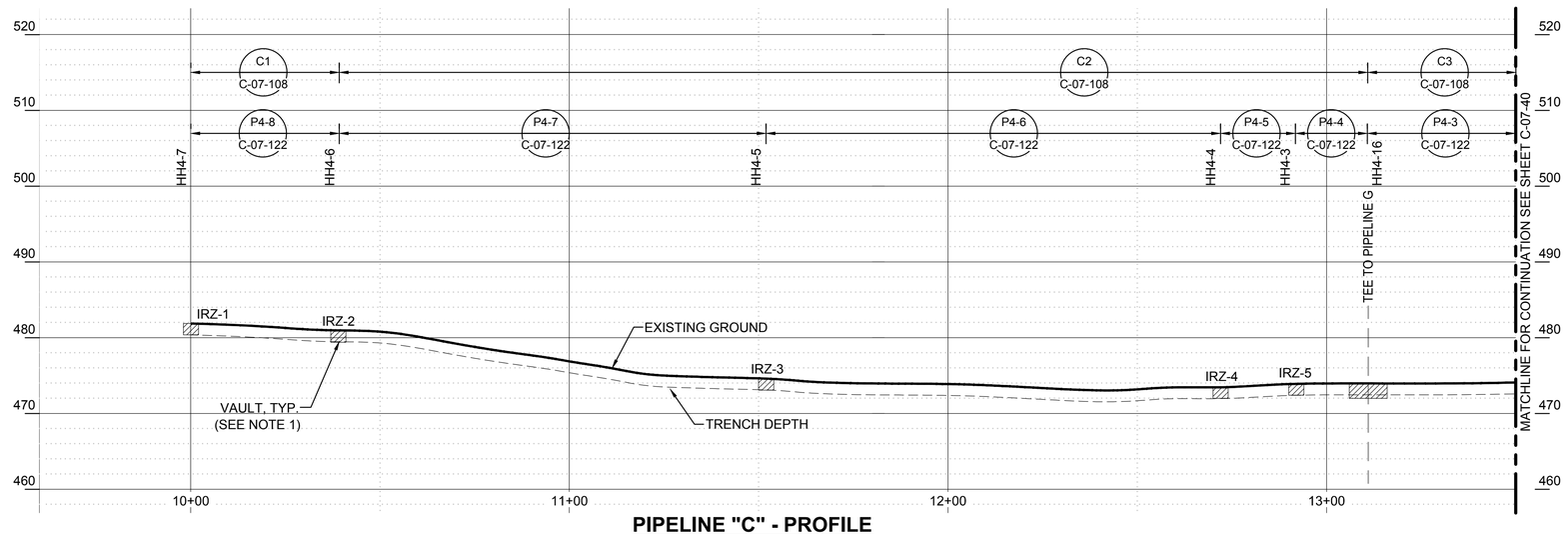

PIPELINE "C" - PROFILE

(SCALE: 1" = 20' H; 1" = 10' V)

- FINAL DESIGN - FOR AGENCY APPROVAL ONLY

REGISTERED PROFESSIONAL ENGINEER BENJAMIN J. WUERL C 67811 Exp 6/30/17 STATE OF CALIFORNIA

ETIC ENGINEERING

ARCADIS

NO.	DATE	DESCRIPTION	GM/SPEC	DWN	CHKD	SUPV	APVD BY
2	11/18/15	FINAL DESIGN		AJW	WLM	BW	RAO
1	09/08/14	PRE-FINAL (90%) DESIGN		AJW	BAS	JPB	JEF
0	04/05/13	INTERMEDIATE (60%) DESIGN		AJW	KLD	JPB	JEF

REVISIONS

APPROVED BY: RAO

SO | SUPV | DSGN | DWN | CHKD | OK | DATE | SCALES

TOPOCK GROUNDWATER REMEDIATION PROJECT

PIPELINE - PLAN AND PROFILE
PIPELINE "C1", "C2", & "C3"
STA 10+00 TO STA 13+50

GAS TRANSMISSION & DISTRIBUTION
PACIFIC GAS AND ELECTRIC COMPANY
SAN FRANCISCO, CALIFORNIA

MICROFILM | BILL OF MATL | DWG LIST | SUPSDS | SUPSD BY

SHEET NO. C-07-39 of SHEETS | REV 2

N1808

11/02/2015, 15:37, G:\Graphics\AR\TOPOCK-01\Submittal_100%\DWG\C-Civil\C-07-39 to 59_Plan&Profile.dwg, Tab: C-07-39

NOTES:

1. VAULT DETAILS SHOWN IN AREA 4 OF THE MECHANICAL AND STRUCTURAL DRAWINGS.
2. SEE CONDUIT AND CABLE SCHEDULES AND SINGLE LINE DIAGRAMS ON SHEETS E-00-12 THRU E-00-20.
3. CLEANOUT LOCATIONS PROVIDE CLEANOUT PIPING FOR ALL INJECTION, EXTRACTION, BACKWASH, AND REMEDY-PRODUCED WATER LINES AT INDICATED LOCATIONS (SEE DETAIL C-00-08).

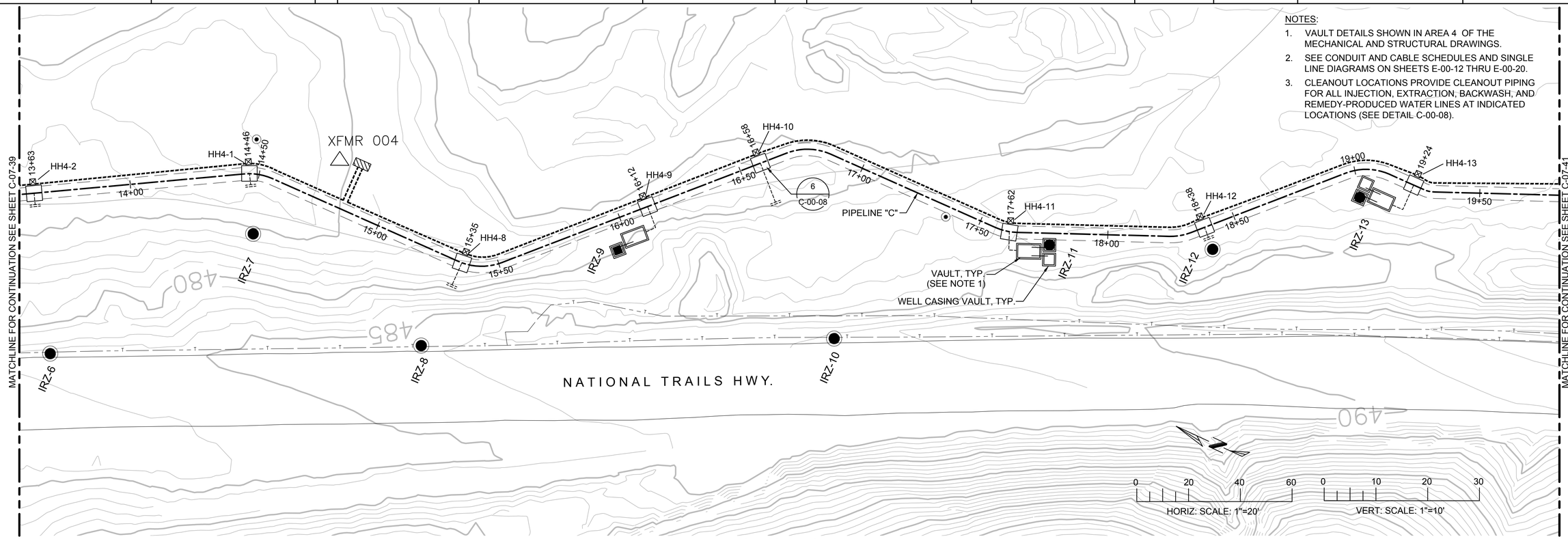

PIPELINE "C" - PLAN

(SCALE: 1" = 20')

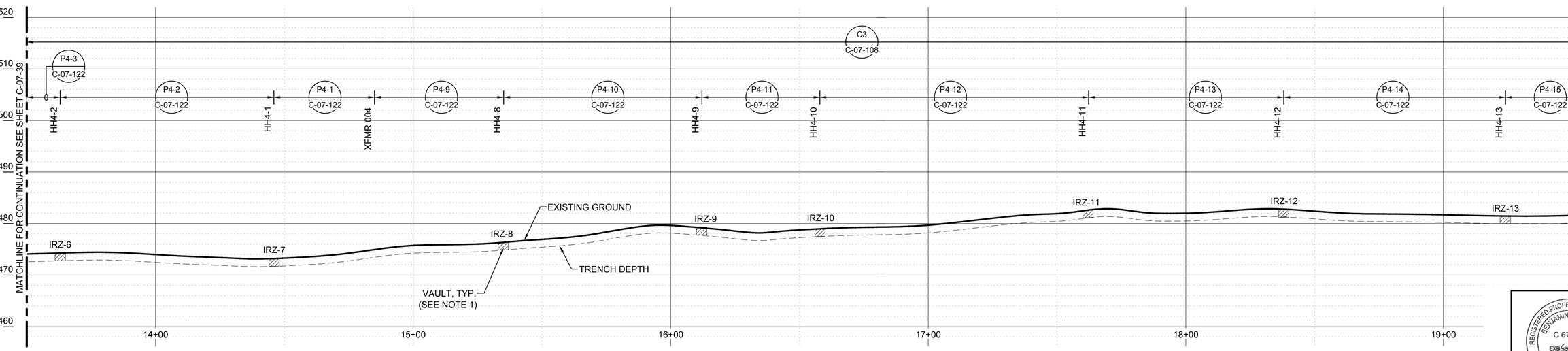

PIPELINE "C" - PROFILE

(SCALE: 1" = 20' H; 1" = 10' V)

- FINAL DESIGN -
FOR AGENCY APPROVAL ONLY

REGISTERED PROFESSIONAL ENGINEER
BENJAMIN J. WUSZIL
C 67811
EXP 6/30/17
STATE OF CALIFORNIA

ETIC ENGINEERING

ARCADIS

NO.	DATE	DESCRIPTION	GM/SPEC	DWN	CHKD	SUPV	APVD BY
2	11/18/15	FINAL DESIGN		AJW	WLM	BW	RAO
1	09/08/14	PRE-FINAL (90%) DESIGN		AJW	BAS	JPB	JEF
0	04/05/13	INTERMEDIATE (60%) DESIGN		AJW	KLD	JPB	JEF

REVISIONS

APPROVED BY	SO
RAO	SUPV
	DSGN
	DWN
	CHKD
	OK
	DATE
	SCALES

TOPOCK GROUNDWATER REMEDIATION PROJECT

PIPELINE - PLAN AND PROFILE
PIPELINE "C2"
STA 13+50 TO STA 19+60

GAS TRANSMISSION & DISTRIBUTION
PACIFIC GAS AND ELECTRIC COMPANY
SAN FRANCISCO, CALIFORNIA

MICROFILM	
BILL OF MATL	
DWG LIST	
SUPSDS	
SUPSD BY	
SHEET NO.	of SHEETS
C-07-40	REV 2

N1808

11/02/2015, 15:37, G:\Graphics\ARITOPOCK-01\Submittal_100%\DWGs\C-Civil\C-07-39 to 59_Plan&Profile.dwg, Tab: C-07-40

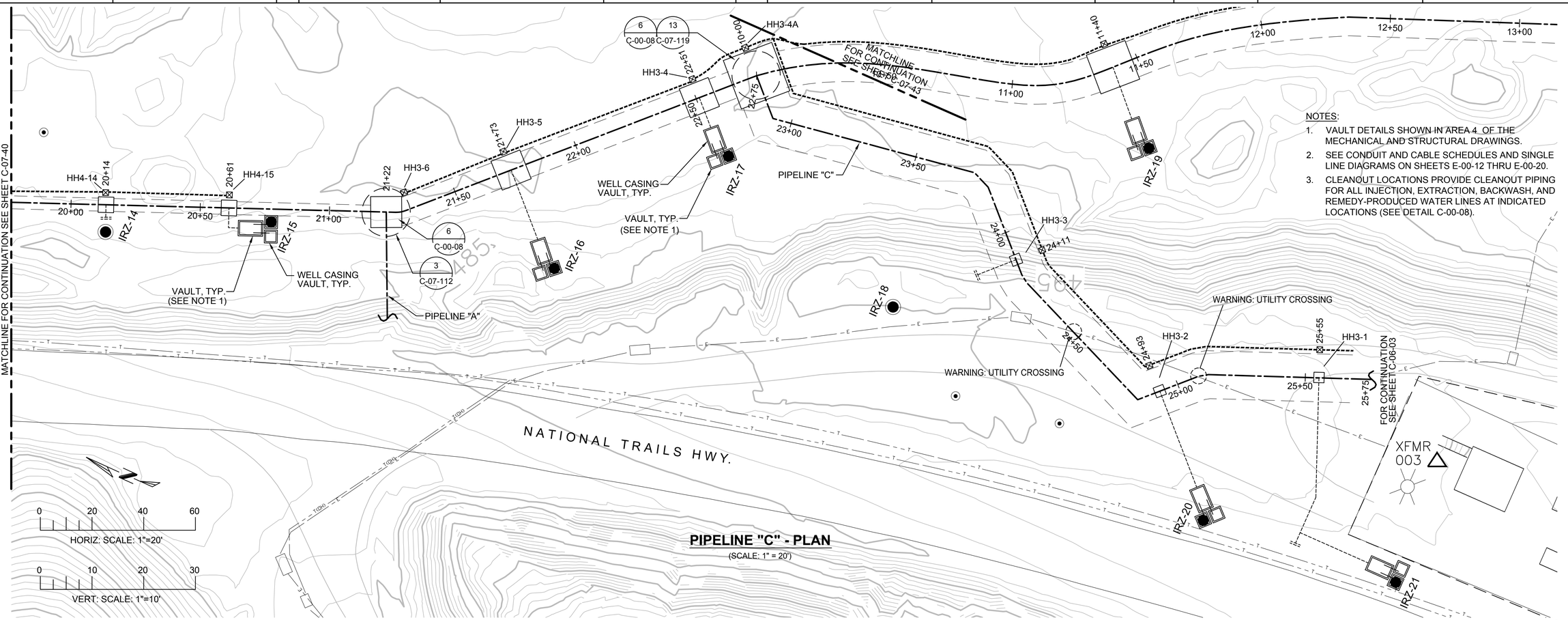

PIPELINE "C" - PLAN

(SCALE: 1" = 20')

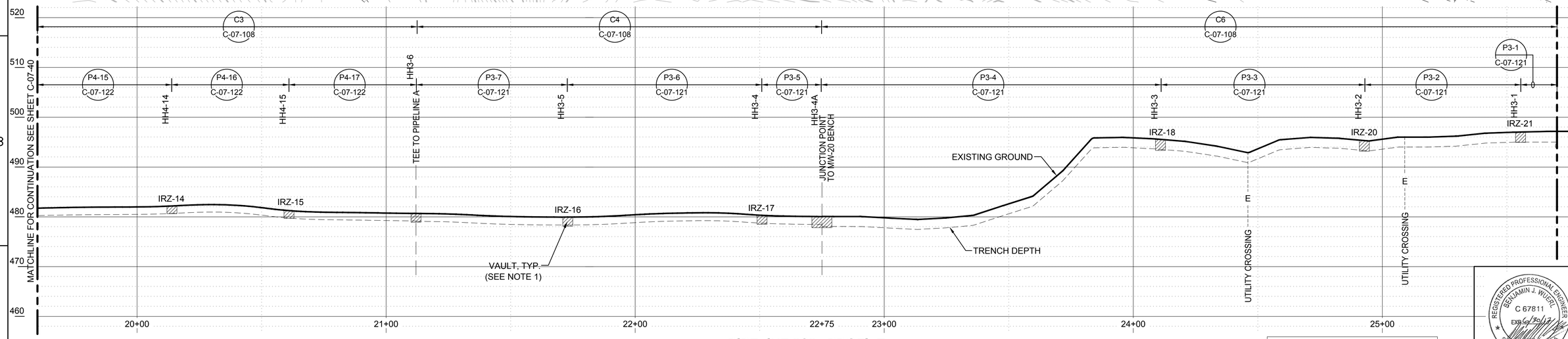

PIPELINE "C" - PROFILE

(SCALE: 1" = 20' H; 1" = 10' V)

- FINAL DESIGN - FOR AGENCY APPROVAL ONLY

REGISTERED PROFESSIONAL ENGINEER BENJAMIN J. WUERL C 67811 EXP 6/30/17 STATE OF CALIFORNIA

ETIC ENGINEERING

ARCADIS

NO.	DATE	DESCRIPTION	GM/SPEC	DWN	CHKD	SUPV	APVD BY
2	11/18/15	FINAL DESIGN	AJW	WLM	BW	RAO	
1	09/08/14	PRE-FINAL (90%) DESIGN	AJW	BAS	JPB	JEF	
0	04/05/13	INTERMEDIATE (60%) DESIGN	AJW	KLD	JPB	JEF	

REVISIONS

APPROVED BY	
RAO	SO
	SUPV
	DSGN
	DWN
	CHKD
	OK
	DATE
	SCALES

TOPOCK GROUNDWATER REMEDIATION PROJECT

PIPELINE - PLAN AND PROFILE PIPELINE "C3", "C4", & "C6" STA 19+60 TO STA 25+79

GAS TRANSMISSION & DISTRIBUTION

PACIFIC GAS AND ELECTRIC COMPANY

SAN FRANCISCO, CALIFORNIA

MICROFILM	
BILL OF MATL	
DWG LIST	
SUPSDS	
SUPSD BY	
SHEET NO.	of SHEETS
C-07-41	REV 2

11/02/2015, 15:37, G:\Graphics\ARI\TOPOCK-01\Submittal_100%\DWGs\C-Civil\C-07-39 to 59_Plan&Profile.dwg, Tab: C-07-41

N1808

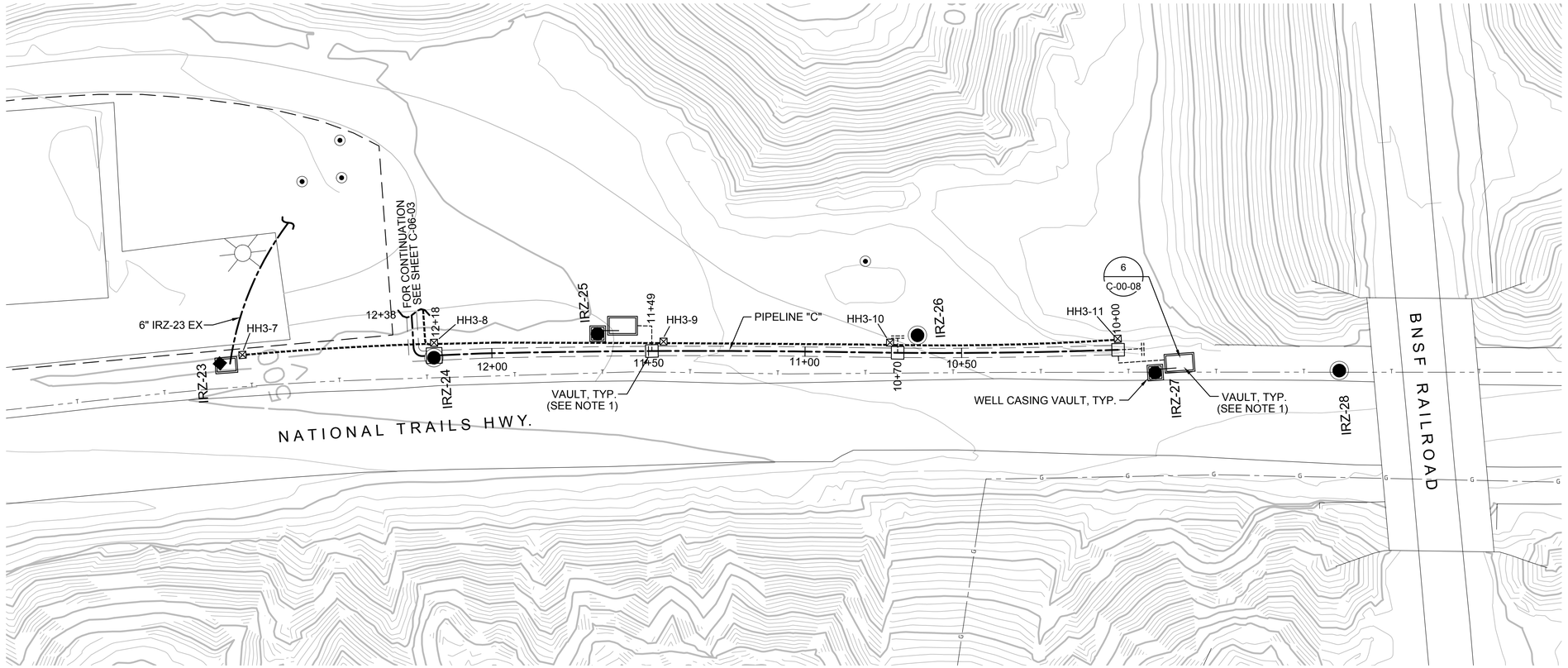

PIPELINE "C" - PLAN

(SCALE: 1" = 20')

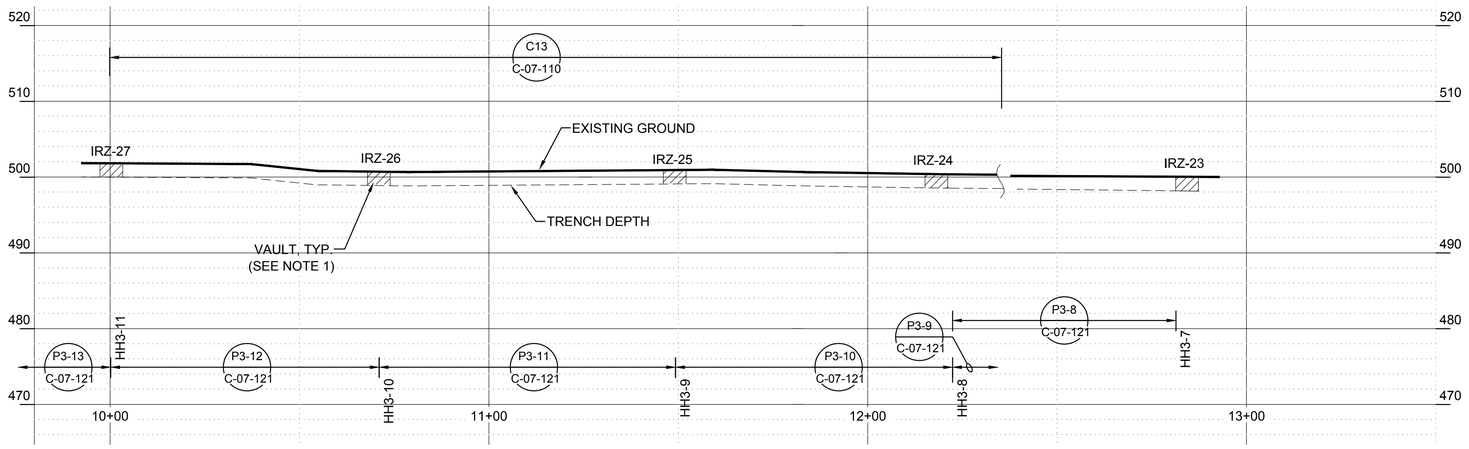

PIPELINE "C" - PROFILE

(SCALE: 1" = 20' H; 1" = 10' V)

NOTES:

1. VAULT DETAILS SHOWN IN AREA 4 OF THE MECHANICAL AND STRUCTURAL DRAWINGS.
2. SEE CONDUIT AND CABLE SCHEDULES AND SINGLE LINE DIAGRAMS ON SHEETS E-00-12 THRU E-00-20.
3. CLEANOUT LOCATIONS PROVIDE CLEANOUT PIPING FOR ALL INJECTION, EXTRACTION, BACKWASH, AND REMEDY-PRODUCED WATER LINES AT INDICATED LOCATIONS (SEE DETAIL C-00-08).

0 20 40 60
HORIZ: SCALE: 1"=20'

0 10 20 30
VERT: SCALE: 1"=10'

- FINAL DESIGN - FOR AGENCY APPROVAL ONLY

REGISTERED PROFESSIONAL ENGINEER BENJAMIN J. WUERL C 67811 EXP 6/30/17 STATE OF CALIFORNIA

ETIC ENGINEERING

ARCADIS

NO.	DATE	DESCRIPTION	GM/SPEC	DWN	CHKD	SUPV	APVD BY
2	11/18/15	FINAL DESIGN		AJW	WLM	BW	RAO
1	09/08/14	PRE-FINAL (90%) DESIGN		AJW	BAS	JPB	JEF
0	04/05/13	INTERMEDIATE (60%) DESIGN		AJW	KLD	JPB	JEF

REVISIONS

APPROVED BY	RAO
SO	
SUPV	
DSGN	
DWN	
CHKD	
OK	
DATE	
SCALES	

TOPOCK GROUNDWATER REMEDIATION PROJECT

PIPELINE - PLAN AND PROFILE
PIPELINE "C13"
STA 10+00 TO STA 12+38

GAS TRANSMISSION & DISTRIBUTION
PACIFIC GAS AND ELECTRIC COMPANY
SAN FRANCISCO, CALIFORNIA

MICROFILM	
BILL OF MATL	
DWG LIST	
SUPSDS	
SUPSD BY	
SHEET NO. of	SHEETS
C-07-42	REV 2

N1808

11/02/2015, 15:37, G:\Graphics\AR\TOPOCK-01\Submittal_100%\DWGs\C-Civil\C-07-39 to 59_Plan&Profile.dwg, Tab: C-07-42

NOTES:

1. VAULT DETAILS SHOWN IN AREA 4 OF THE MECHANICAL AND STRUCTURAL DRAWINGS.
2. SEE CONDUIT AND CABLE SCHEDULES AND SINGLE LINE DIAGRAMS ON SHEETS E-00-12 THRU E-00-20.
3. CLEANOUT LOCATIONS PROVIDE CLEANOUT PIPING FOR ALL INJECTION, EXTRACTION, BACKWASH, AND REMEDY-PRODUCED WATER LINES AT INDICATED LOCATIONS (SEE DETAIL C-00-08).

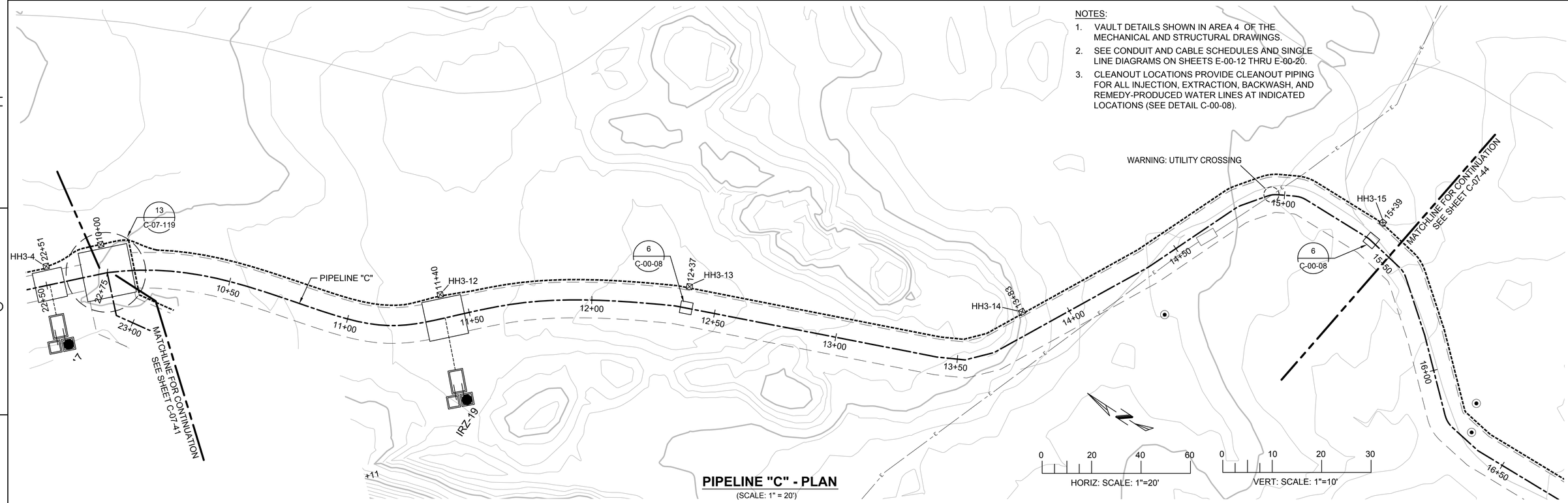

PIPELINE "C" - PLAN
(SCALE: 1" = 20')

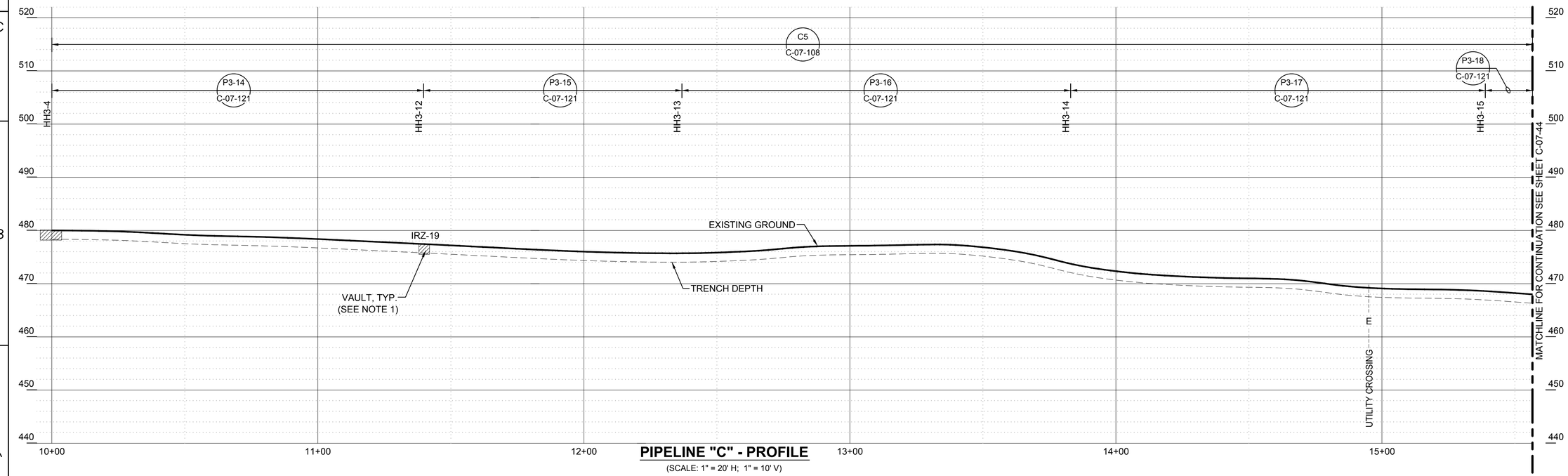

PIPELINE "C" - PROFILE
(SCALE: 1" = 20' H; 1" = 10' V)

- FINAL DESIGN - FOR AGENCY APPROVAL ONLY

REGISTERED PROFESSIONAL ENGINEER
BENJAMIN J. WUERL
C 67811
Exp 6/30/17
STATE OF CALIFORNIA

ETIC ENGINEERING

ARCADIS

NO.	DATE	DESCRIPTION	GM/SPEC	DWN	CHKD	SUPV	APVD BY
3	11/18/15	FINAL DESIGN		AJW	WLM	BW	RAO
2	8/5/15	90% RTC RESOLUTION		AJW	KLD	WLM	BJW
1	09/08/14	PRE-FINAL (90%) DESIGN		AJW	BAS	JPB	JEF
0	04/05/13	INTERMEDIATE (60%) DESIGN		AJW	KLD	JPB	JEF

REVISIONS

APPROVED BY	
	SO
	SUPV
RAO	DSGN
	DWN
	CHKD
	OK
	DATE
	SCALES

TOPOCK GROUNDWATER REMEDIATION PROJECT
PIPELINE - PLAN AND PROFILE
PIPELINE "C5"
STA 10+00 TO STA 15+50
GAS TRANSMISSION & DISTRIBUTION
PACIFIC GAS AND ELECTRIC COMPANY
SAN FRANCISCO, CALIFORNIA

MICROFILM	
BILL OF MATL	
DWG LIST	
SUPSDS	
SUPSD BY	
SHEET NO. of SHEETS	
C-07-43	REV 3

N1808

11/02/2015, 15:38, G:\Graphics\AR\TOPOCK-011Submittal_100%\DWG&C-Civil\C-07-39 to 59_Plan&Profile.dwg, Tab: C-07-43

NOTES:

1. VAULT DETAILS SHOWN IN AREA 4 OF THE MECHANICAL AND STRUCTURAL DRAWINGS.
2. SEE CONDUIT AND CABLE SCHEDULES AND SINGLE LINE DIAGRAMS ON SHEETS E-00-12 THRU E-00-20.
3. CLEANOUT LOCATIONS PROVIDE CLEANOUT PIPING FOR ALL INJECTION, EXTRACTION, BACKWASH, AND REMEDY-PRODUCED WATER LINES AT INDICATED LOCATIONS (SEE DETAIL C-00-08).

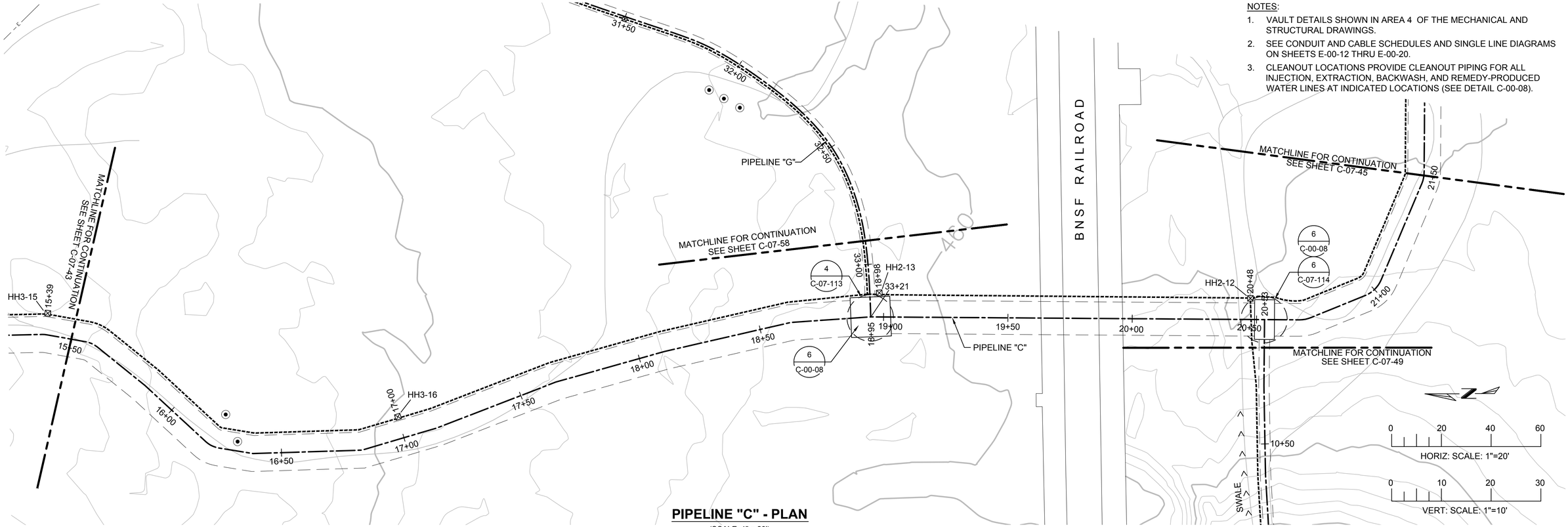

PIPELINE "C" - PLAN

(SCALE: 1" = 20')

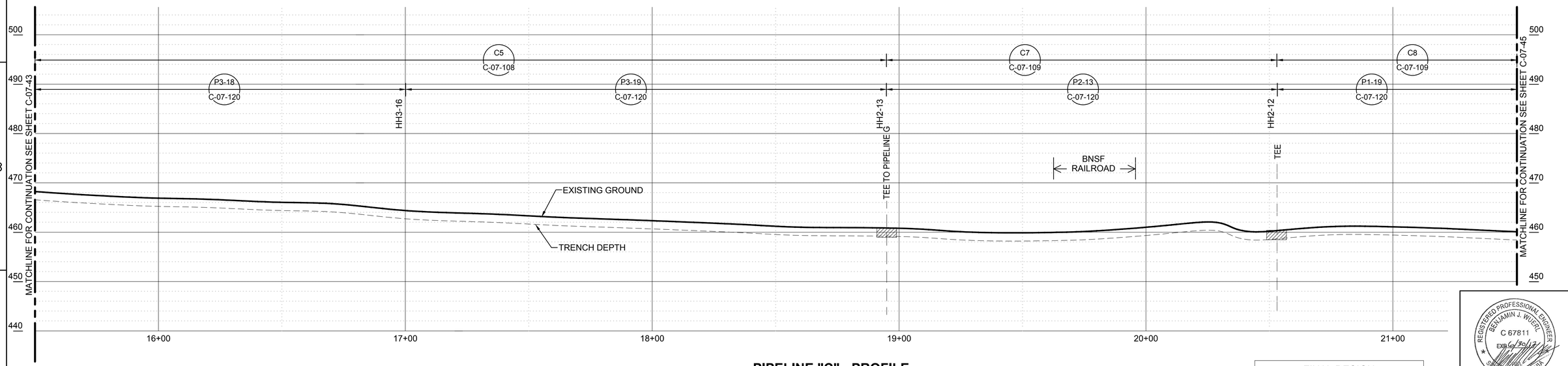

PIPELINE "C" - PROFILE

(SCALE: 1" = 20' H; 1" = 10' V)

- FINAL DESIGN - FOR AGENCY APPROVAL ONLY

REGISTERED PROFESSIONAL ENGINEER BENJAMIN J. WURL C 67811 Exp 6/30/17 STATE OF CALIFORNIA

ETIC ENGINEERING

ARCADIS

NO.	DATE	DESCRIPTION	GM/SPEC	DWN	CHKD	SUPV	APVD BY
2	11/18/15	FINAL DESIGN		AJW	WLM	BW	RAO
1	09/08/14	PRE-FINAL (90%) DESIGN		AJW	BAS	JPB	JEF
0	04/05/13	INTERMEDIATE (60%) DESIGN		AJW	KLD	JPB	JEF

REVISIONS

APPROVED BY	
RAO	SO
	SUPV
	DSGN
	DWN
	CHKD
	OK
	DATE
	SCALES

TOPOCK GROUNDWATER REMEDIATION PROJECT

PIPELINE - PLAN AND PROFILE
PIPELINE "C5", "C7", & "C8"
STA 15+50 TO 21+50

GAS TRANSMISSION & DISTRIBUTION
PACIFIC GAS AND ELECTRIC COMPANY
SAN FRANCISCO, CALIFORNIA

MICROFILM	
BILL OF MATL	
DWG LIST	
SUPSDS	
SUPSD BY	
SHEET NO.	of SHEETS
C-07-44	REV 2

N1808

11/02/2015, 15:38, G:\Graphics\AR\TOPOCK-01\Submittal_100%\DWGs\C-Civil\C-07-39 to 59_Plan&Profile.dwg, Tab: C-07-44

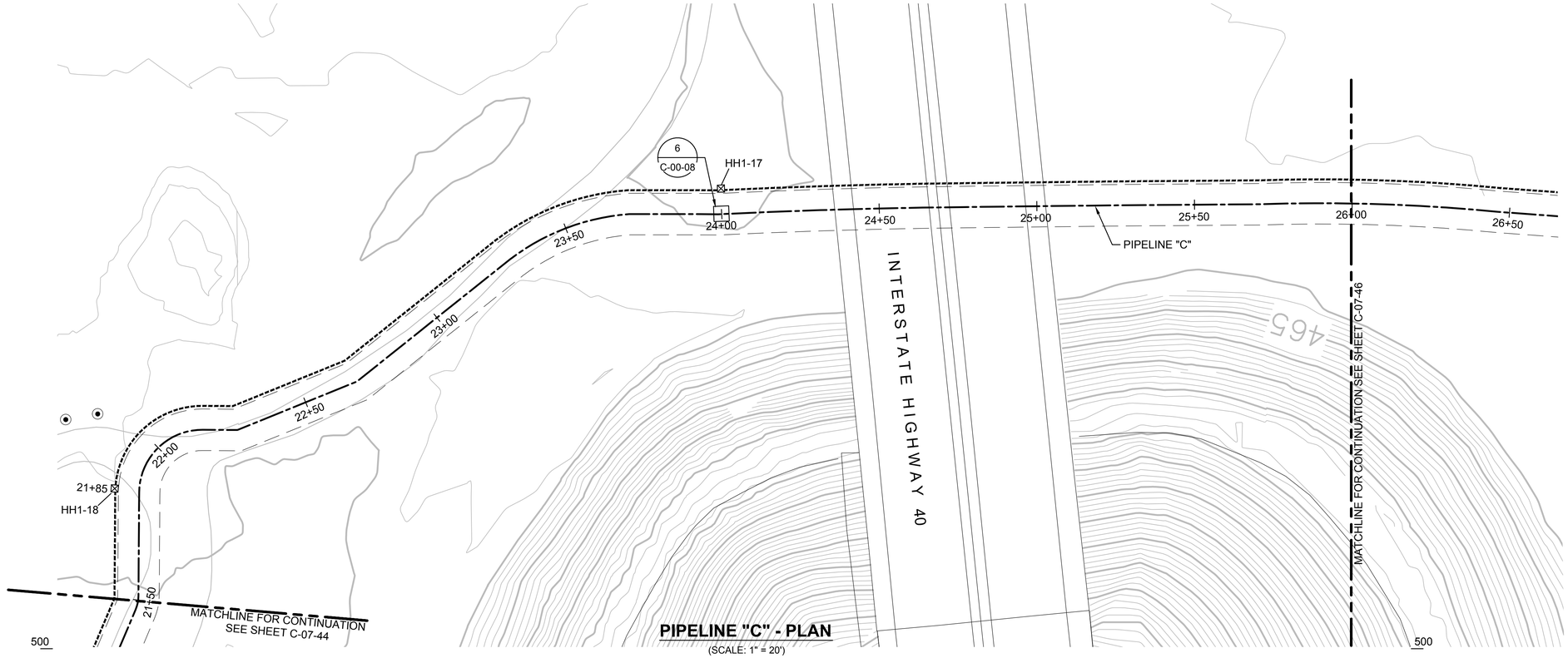

PIPELINE "C" - PLAN

(SCALE: 1" = 20')

NOTES:

1. VAULT DETAILS SHOWN IN AREA 4 OF THE MECHANICAL AND STRUCTURAL DRAWINGS.
2. SEE CONDUIT AND CABLE SCHEDULES AND SINGLE LINE DIAGRAMS ON SHEETS E-00-12 THRU E-00-20.
3. CLEANOUT LOCATIONS PROVIDE CLEANOUT PIPING FOR ALL INJECTION, EXTRACTION, BACKWASH, AND REMEDY-PRODUCED WATER LINES AT INDICATED LOCATIONS (SEE DETAIL C-00-08).

0 20 40 60

HORIZ: SCALE: 1"=20'

0 10 20 30

VERT: SCALE: 1"=10'

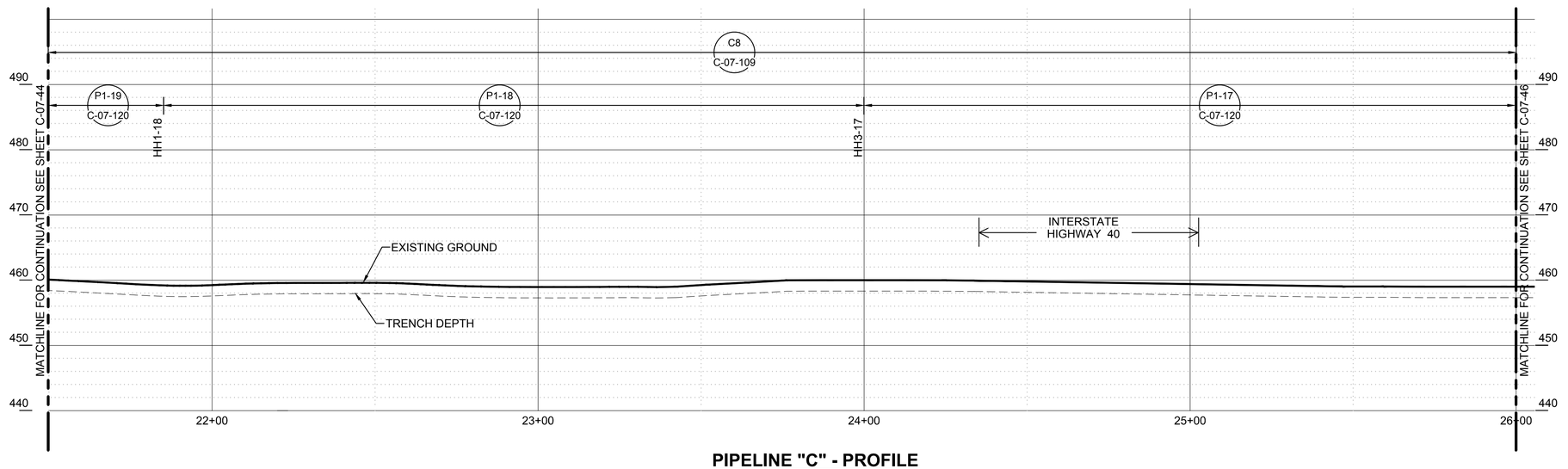

PIPELINE "C" - PROFILE

(SCALE: 1" = 20' H; 1" = 10' V)

- FINAL DESIGN - FOR AGENCY APPROVAL ONLY

REGISTERED PROFESSIONAL ENGINEER
BENJAMIN J. WUERL
C 67811
EXP 6/30/17
CIVIL
STATE OF CALIFORNIA

ETIC ENGINEERING

ARCADIS

NO.	DATE	DESCRIPTION	GM/SPEC	DWN	CHKD	SUPV	APVD BY
2	11/18/15	FINAL DESIGN		AJW	WLM	BW	RAO
1	09/08/14	PRE-FINAL (90%) DESIGN		AJW	BAS	JPB	JEF
0	04/05/13	INTERMEDIATE (60%) DESIGN		AJW	KLD	JPB	JEF

REVISIONS

APPROVED BY	
RAO	SO
	SUPV
	DSGN
	DWN
	CHKD
	OK
	DATE
	SCALES

TOPOCK GROUNDWATER REMEDIATION PROJECT

PIPELINE - PLAN AND PROFILE
PIPELINE "C8"
STA 21+50 TO STA 26+00

GAS TRANSMISSION & DISTRIBUTION
PACIFIC GAS AND ELECTRIC COMPANY
SAN FRANCISCO, CALIFORNIA

MICROFILM	
BILL OF MATL	
DWG LIST	
SUPSDS	
SUPSD BY	
SHEET NO.	of SHEETS
C-07-45	REV 2

11/02/2015, 15:38, G:\Graphics\ART\TOPOCK-01\Submittal_100%\DWGs\C-Civil\C-07-39 to 59_Plan&Profile.dwg, Tab: C-07-45

N1808

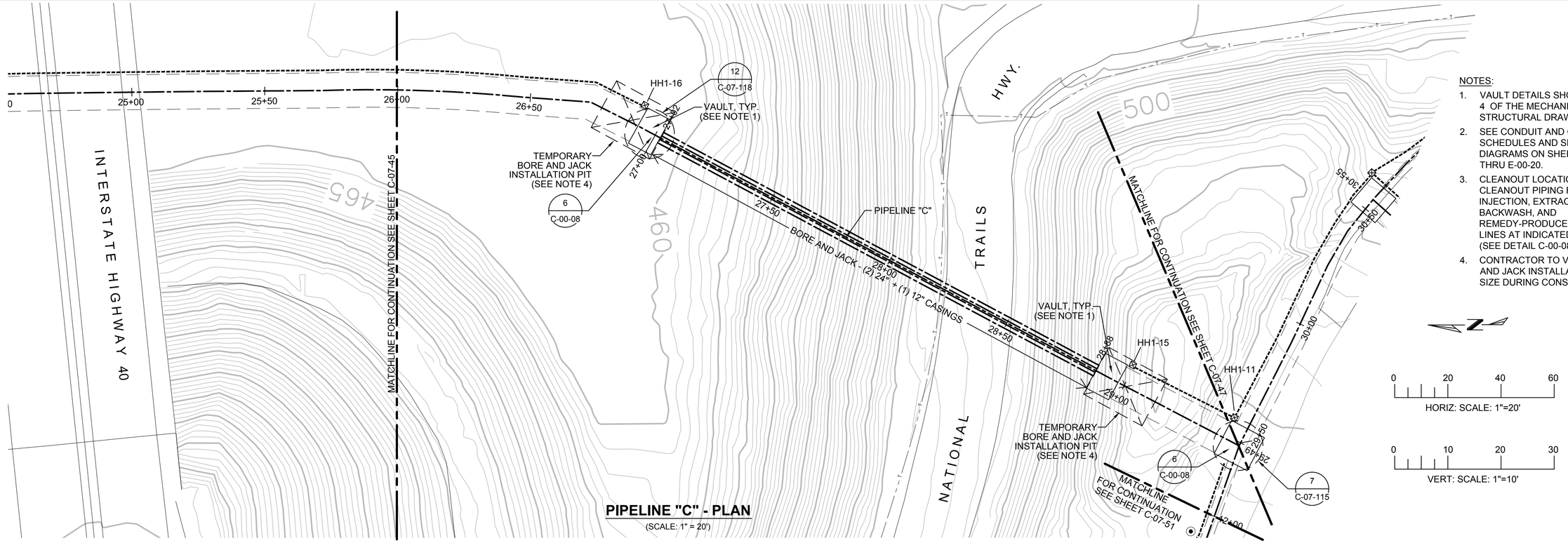

PIPELINE "C" - PLAN

(SCALE: 1" = 20')

NOTES:

1. VAULT DETAILS SHOWN IN AREA 4 OF THE MECHANICAL AND STRUCTURAL DRAWINGS.
2. SEE CONDUIT AND CABLE SCHEDULES AND SINGLE LINE DIAGRAMS ON SHEETS E-00-12 THRU E-00-20.
3. CLEANOUT LOCATIONS PROVIDE CLEANOUT PIPING FOR ALL INJECTION, EXTRACTION, BACKWASH, AND REMEDY-PRODUCED WATER LINES AT INDICATED LOCATIONS (SEE DETAIL C-00-08).
4. CONTRACTOR TO VERIFY BORE AND JACK INSTALLATION PIT SIZE DURING CONSTRUCTION.

0 20 40 60
HORIZ: SCALE: 1"=20'

0 10 20 30
VERT: SCALE: 1"=10'

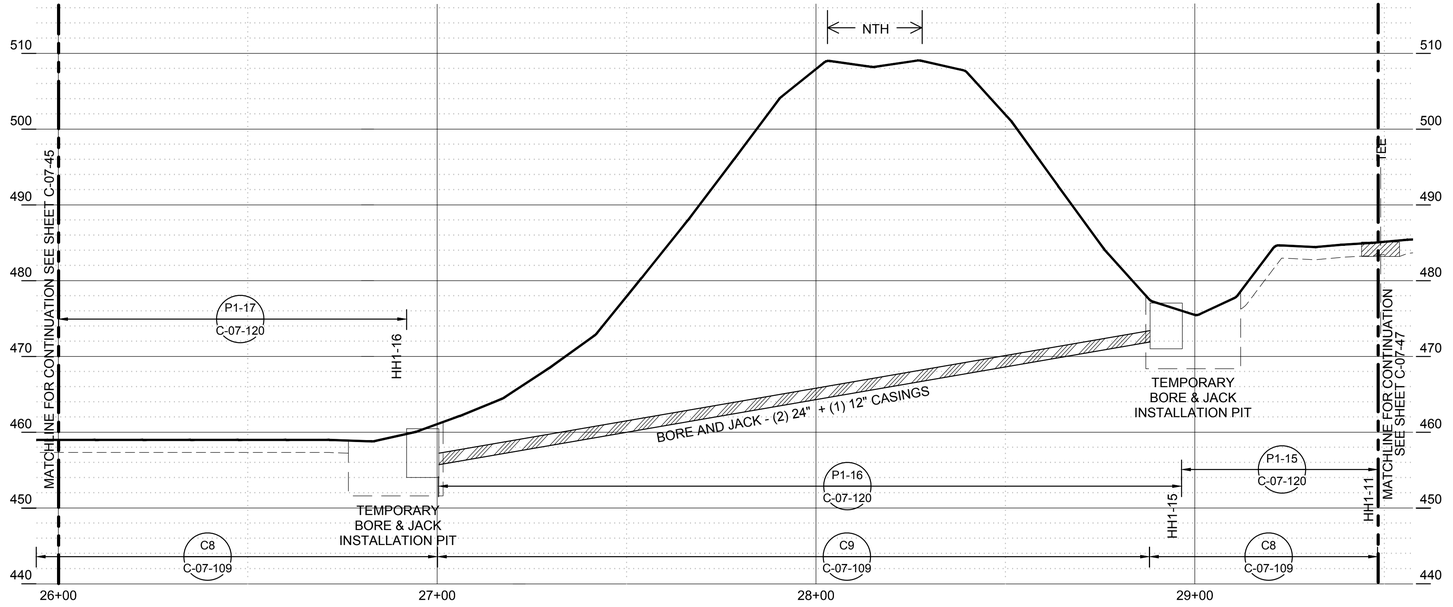

PIPELINE "C" - PROFILE

(SCALE: 1" = 20' H; 1" = 10' V)

- FINAL DESIGN - FOR AGENCY APPROVAL ONLY

REGISTERED PROFESSIONAL ENGINEER BENJAMIN J. WUERL C 67811 EXP 6/30/17 STATE OF CALIFORNIA

ETIC ENGINEERING

ARCADIS

NO.	DATE	DESCRIPTION	GM/SPEC	DWN	CHKD	SUPV	APVD BY
2	11/18/15	FINAL DESIGN	AJW	WLM	BW	RAO	
1	09/08/14	PRE-FINAL (90%) DESIGN	AJW	BAS	JPB	JEF	
0	04/05/13	INTERMEDIATE (60%) DESIGN	AJW	KLD	JPB	JEF	

REVISIONS

APPROVED BY	
	SO
RAO	SUPV
	DSGN
	DWN
	CHKD
	OK
	DATE
	SCALES

TOPOCK GROUNDWATER REMEDIATION PROJECT

PIPELINE - PLAN AND PROFILE
PIPELINE "C8" & "C9"
STA 26+00 TO STA 29+49
GAS TRANSMISSION & DISTRIBUTION
PACIFIC GAS AND ELECTRIC COMPANY
SAN FRANCISCO, CALIFORNIA

MICROFILM	
BILL OF MATL	
DWG LIST	
SUPSDS	
SUPSD BY	
SHEET NO. of SHEETS	
C-07-46	REV 2

11/02/2015, 15:38, G:\Graphics\AR\TOPOCK-011\Submittal_100%\DWGs\C-Civil\C-07-39 to 59_Plan&Profile.dwg, Tab: C-07-46

N1608

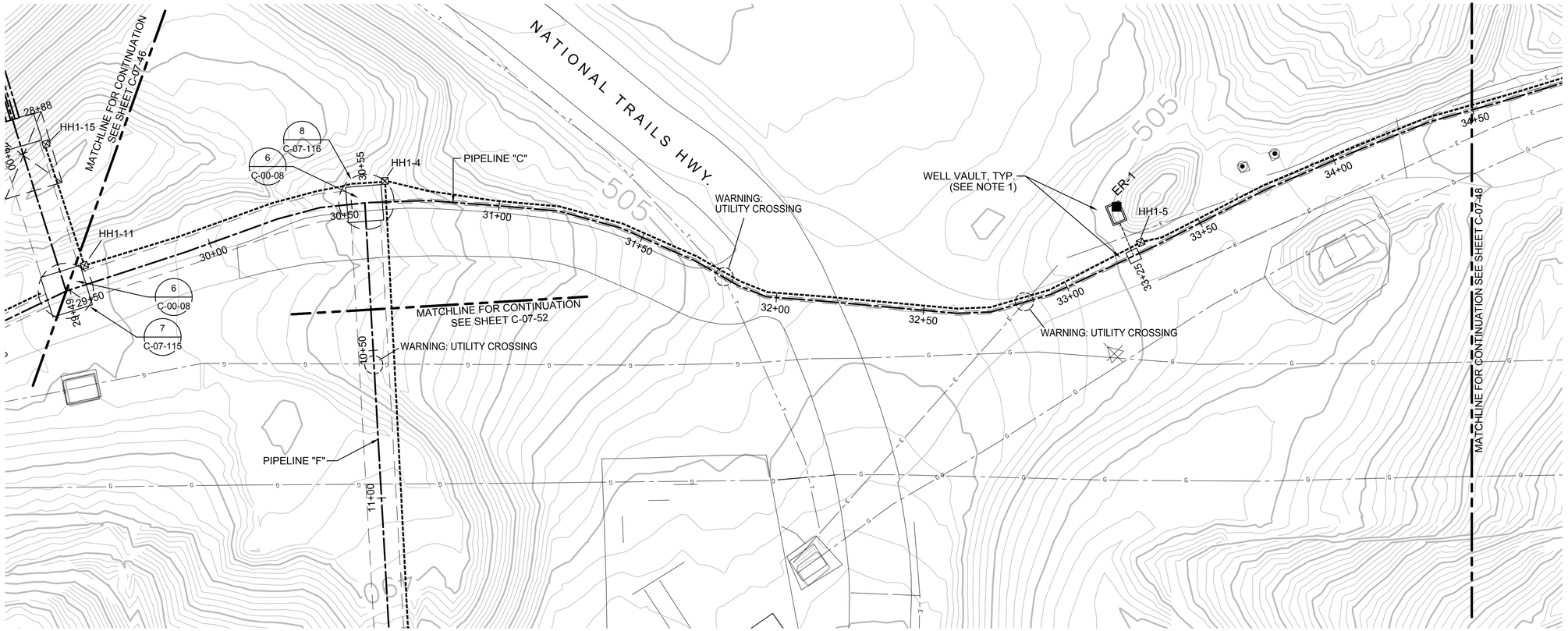

PIPELINE "C" - PLAN

(SCALE: 1" = 20')

NOTES:

1. VAULT DETAILS SHOWN IN AREA 5 OF THE MECHANICAL AND STRUCTURAL DRAWINGS.
2. SEE CONDUIT AND CABLE SCHEDULES AND SINGLE LINE DIAGRAMS ON SHEETS E-00-12 THRU E-00-20.
3. CLEANOUT LOCATIONS PROVIDE CLEANOUT PIPING FOR ALL INJECTION, EXTRACTION, BACKWASH, AND REMEDY-PRODUCED WATER LINES AT INDICATED LOCATIONS (SEE DETAIL C-00-08).

0 20 40 60
HORIZ: SCALE: 1"=20'

0 10 20 30
VERT: SCALE: 1"=10'

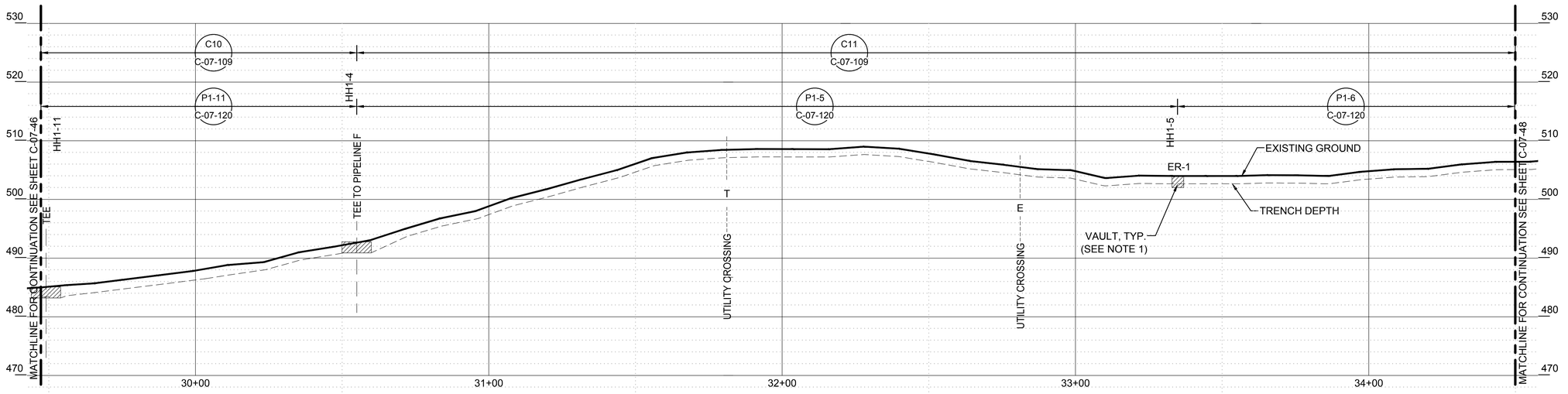

PIPELINE "C" - PROFILE

(SCALE: 1" = 20' H; 1" = 10' V)

- FINAL DESIGN - FOR AGENCY APPROVAL ONLY

REGISTERED PROFESSIONAL ENGINEER BENJAMIN J. WUERL C 67811 EXP 6/30/17 STATE OF CALIFORNIA

ETIC ENGINEERING

ARCADIS

NO.	DATE	DESCRIPTION	GM/SPEC	DWN	CHKD	SUPV	APVD BY
2	11/18/15	FINAL DESIGN	AJW	WLM	BW	RAO	
1	09/08/14	PRE-FINAL (90%) DESIGN	AJW	BAS	JPB	JEF	
0	04/05/13	INTERMEDIATE (60%) DESIGN	AJW	KLD	JPB	JEF	

REVISIONS

APPROVED BY: RAO

SO | SUPV | DSGN | DWN | CHKD | OK | DATE | SCALES

TOPOCK GROUNDWATER REMEDIATION PROJECT

PIPELINE - PLAN AND PROFILE
PIPELINE "C10" & "C11"
STA 29+49 TO STA 34+50

GAS TRANSMISSION & DISTRIBUTION
PACIFIC GAS AND ELECTRIC COMPANY
SAN FRANCISCO, CALIFORNIA

MICROFILM | BILL OF MATL | DWG LIST | SUPSDS | SUPSD BY

SHEET NO. C-07-47 of SHEETS | REV 2

11/02/2015, 15:39, G:\Graphics\ART\TOPOCK-01\Submittal_100%\DWGs\C-Civil\C-07-39 to 59_Plan&Profile.dwg, Tab: C-07-47

N1808

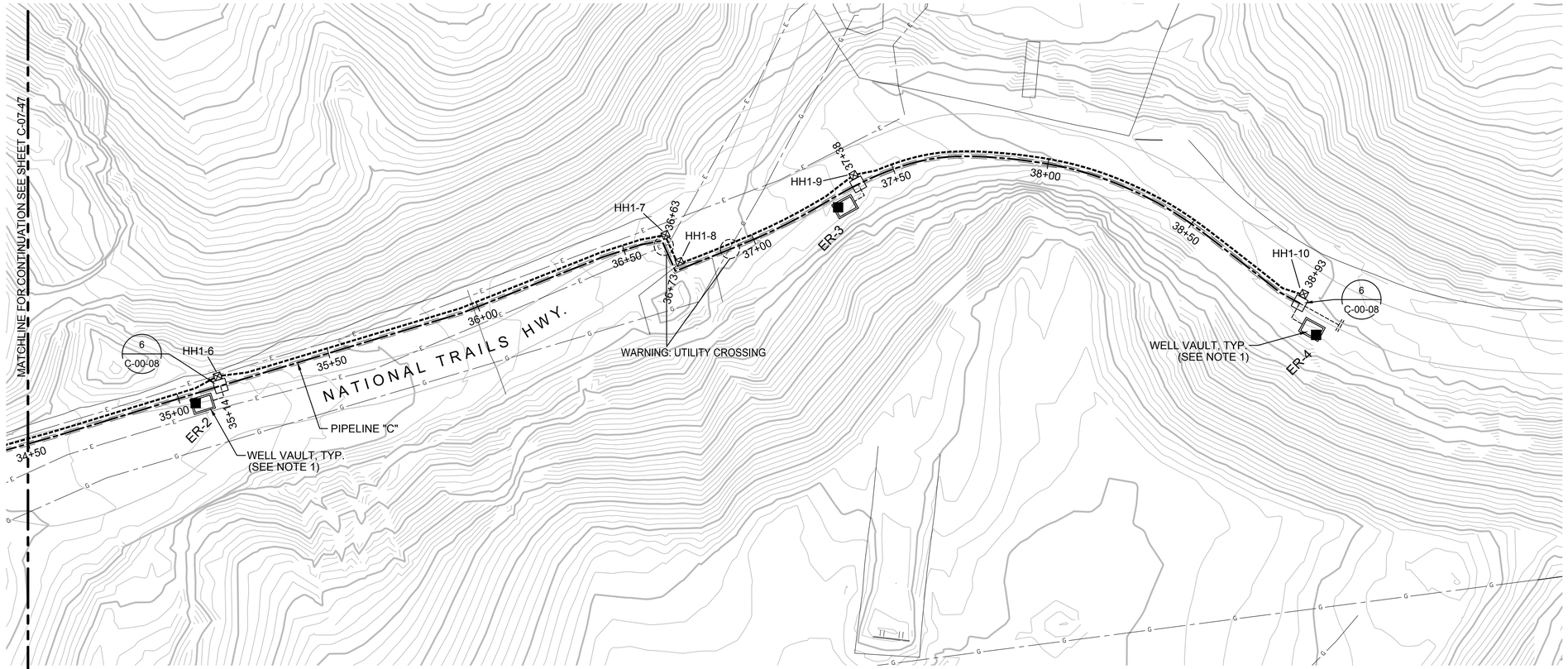

PIPELINE "C" - PLAN

(SCALE: 1" = 20')

NOTES:

1. VAULT DETAILS SHOWN IN AREA 5 OF THE MECHANICAL AND STRUCTURAL DRAWINGS.
2. SEE CONDUIT AND CABLE SCHEDULES AND SINGLE LINE DIAGRAMS ON SHEETS E-00-12 THRU E-00-20.
3. CLEANOUT LOCATIONS PROVIDE CLEANOUT PIPING FOR ALL INJECTION, EXTRACTION, BACKWASH, AND REMEDY-PRODUCED WATER LINES AT INDICATED LOCATIONS (SEE DETAIL C-00-08).

0 20 40 60
HORIZ: SCALE: 1"=20'

0 10 20 30
VERT: SCALE: 1"=10'

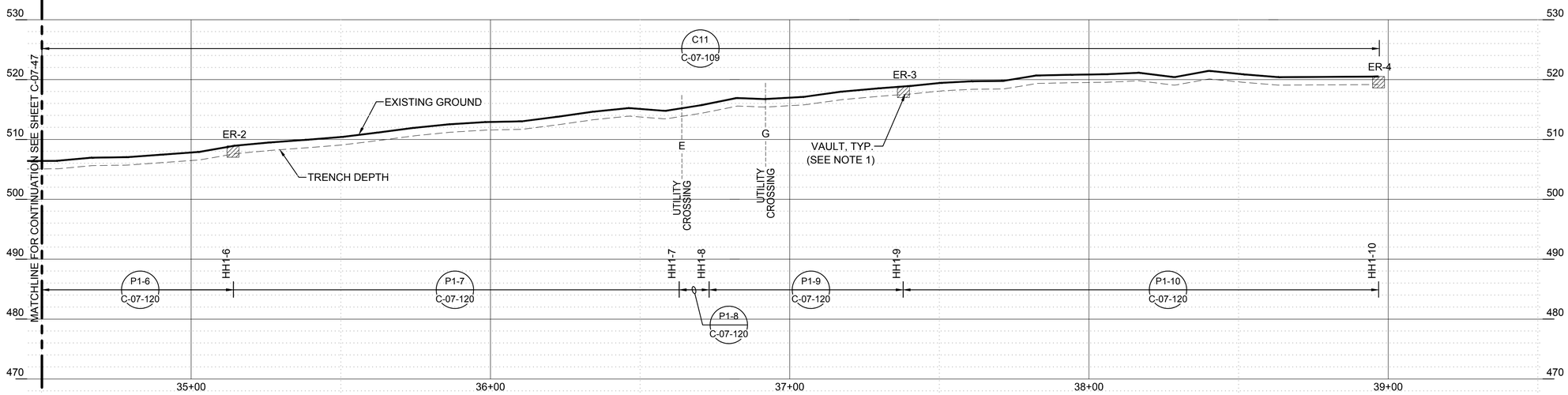

PIPELINE "C" - PROFILE

(SCALE: 1" = 20' H; 1" = 10' V)

- FINAL DESIGN - FOR AGENCY APPROVAL ONLY

REGISTERED PROFESSIONAL ENGINEER
BENJAMIN J. WUEST
C 67811
Exp 6/30/17
STATE OF CALIFORNIA

ETIC ENGINEERING

ARCADIS

NO.	DATE	DESCRIPTION	GM/SPEC	DWN	CHKD	SUPV	APVD BY
2	11/18/15	FINAL DESIGN		AJW	WLM	BW	RAO
1	09/08/14	PRE-FINAL (90%) DESIGN		AJW	BAS	JPB	JEF
0	04/05/13	INTERMEDIATE (60%) DESIGN		AJW	KLD	JPB	JEF

REVISIONS

APPROVED BY	
RAO	SO
	SUPV
	DSGN
	DWN
	CHKD
	OK
	DATE
	SCALES

TOPOCK GROUNDWATER REMEDIATION PROJECT

PIPELINE - PLAN AND PROFILE
PIPELINE "C11"
STA 34+50 TO STA 38+93

GAS TRANSMISSION & DISTRIBUTION
PACIFIC GAS AND ELECTRIC COMPANY
SAN FRANCISCO, CALIFORNIA

MICROFILM	
BILL OF MATL	
DWG LIST	
SUPSDS	
SUPSD BY	
SHEET NO. of SHEETS	
C-07-48	REV 2

N1808

11/02/2015, 15:39, G:\Graphics\AR\TOPOCK-01\Submittal_100%\DWGs\C-Civil\C-07-39 to 59_Plan&Profile.dwg, Tab: C-07-48

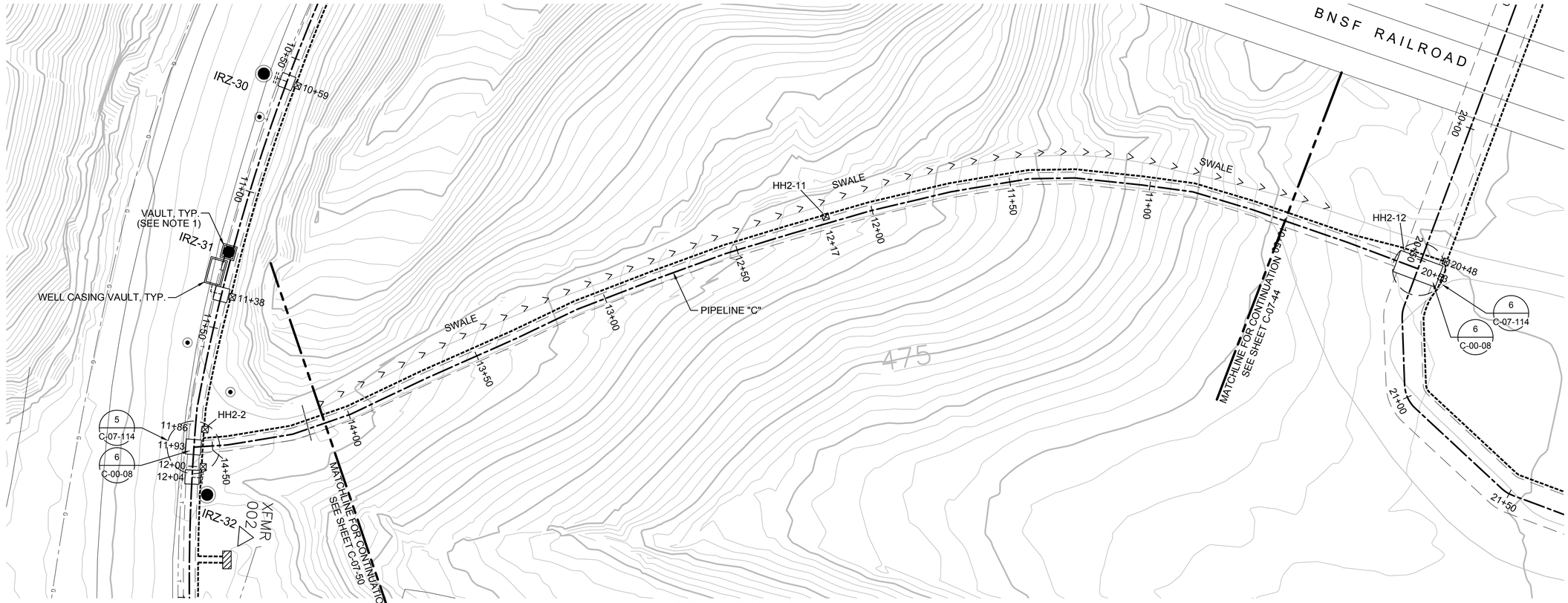

PIPELINE "C" - PLAN

(SCALE: 1" = 20')

NOTES:

1. VAULT DETAILS SHOWN IN AREA 4 OF THE MECHANICAL AND STRUCTURAL DRAWINGS.
2. SEE CONDUIT AND CABLE SCHEDULES AND SINGLE LINE DIAGRAMS ON SHEETS E-00-12 THRU E-00-20.
3. CLEANOUT LOCATIONS PROVIDE CLEANOUT PIPING FOR ALL INJECTION, EXTRACTION, BACKWASH, AND REMEDY-PRODUCED WATER LINES AT INDICATED LOCATIONS (SEE DETAIL C-00-08).

HORIZ: SCALE: 1"=20'

VERT: SCALE: 1"=10'

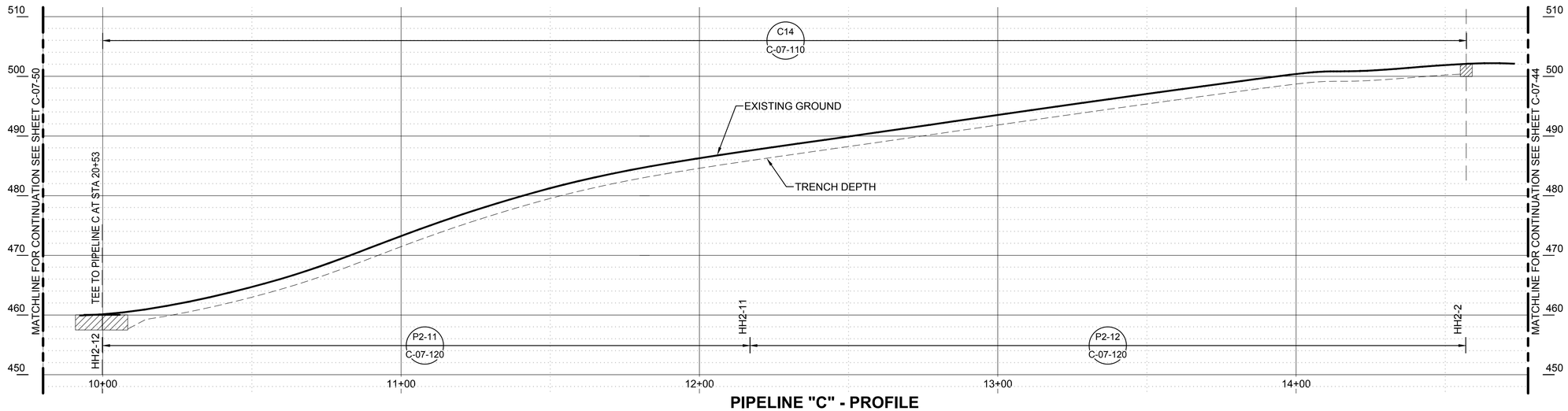

PIPELINE "C" - PROFILE

(SCALE: 1" = 20' H; 1" = 10' V)

- FINAL DESIGN - FOR AGENCY APPROVAL ONLY

REGISTERED PROFESSIONAL ENGINEER BENJAMIN J. WUEST C 67811 EXP 6/30/17 STATE OF CALIFORNIA

NO.	DATE	DESCRIPTION	GM/SPEC	DWN	CHKD	SUPV	APVD BY
2	11/18/15	FINAL DESIGN		AJW	WLM	BW	RAO
1	09/08/14	PRE-FINAL (90%) DESIGN		AJW	BAS	JPB	JEF
0	04/05/13	INTERMEDIATE (60%) DESIGN		AJW	KLD	JPB	JEF

REVISIONS

APPROVED BY: RAO

SO | SUPV | DSGN | DWN | CHKD | OK | DATE | SCALES

TOPOCK GROUNDWATER REMEDIATION PROJECT

PIPELINE - PLAN AND PROFILE PIPELINE "C14" STA 10+00 TO STA 14+56

GAS TRANSMISSION & DISTRIBUTION

PACIFIC GAS AND ELECTRIC COMPANY

SAN FRANCISCO, CALIFORNIA

MICROFILM | BILL OF MATL | DWG LIST | SUPSDS | SUPSD BY

SHEET NO. C-07-49 of SHEETS | REV 2

ETIC ENGINEERING | ARCADIS

N1808

11/02/2015, 15:39, G:\Graphics\ARI\TOPOCK-01\Submittal_100%\DWGs\C-Civil\C-07-39 to 59_Plan&Profile.dwg, Tab: C-07-49

NOTES:

1. VAULT DETAILS SHOWN IN AREA 4 OF THE MECHANICAL AND STRUCTURAL DRAWINGS.
2. SEE CONDUIT AND CABLE SCHEDULES AND SINGLE LINE DIAGRAMS ON SHEETS E-00-12 THRU E-00-20.
3. CLEANOUT LOCATIONS PROVIDE CLEANOUT PIPING FOR ALL INJECTION, EXTRACTION, BACKWASH, AND REMEDY-PRODUCED WATER LINES AT INDICATED LOCATIONS (SEE DETAIL C-00-08).

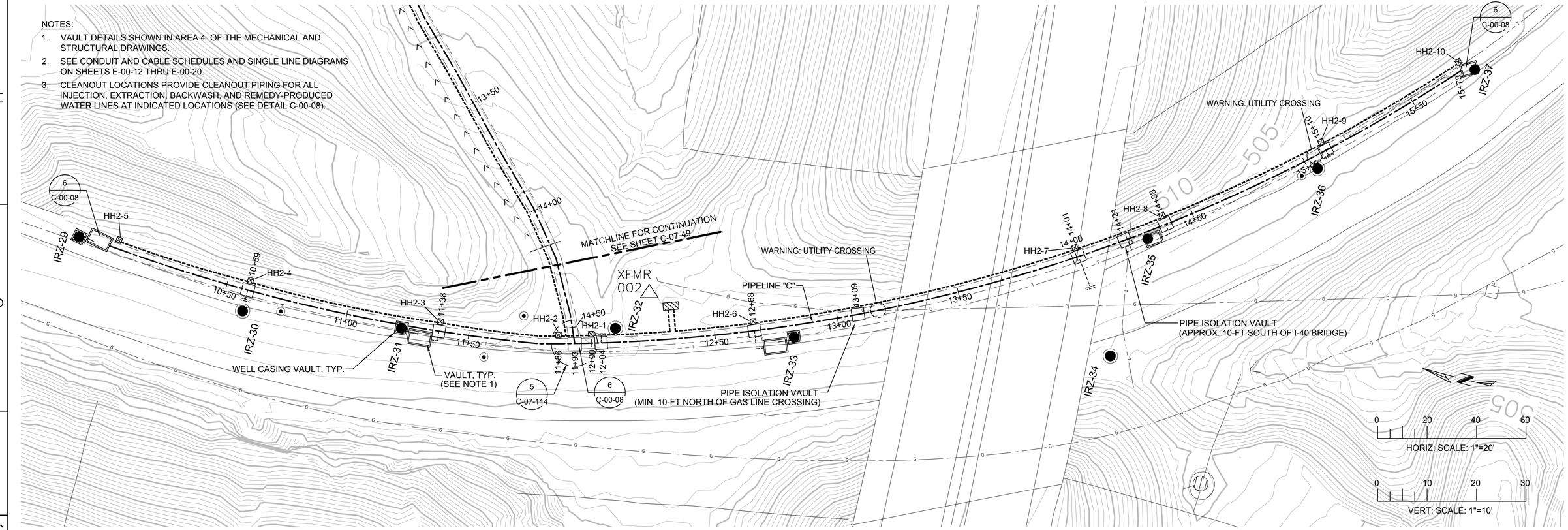

PIPELINE "C" - PLAN

(SCALE: 1" = 20')

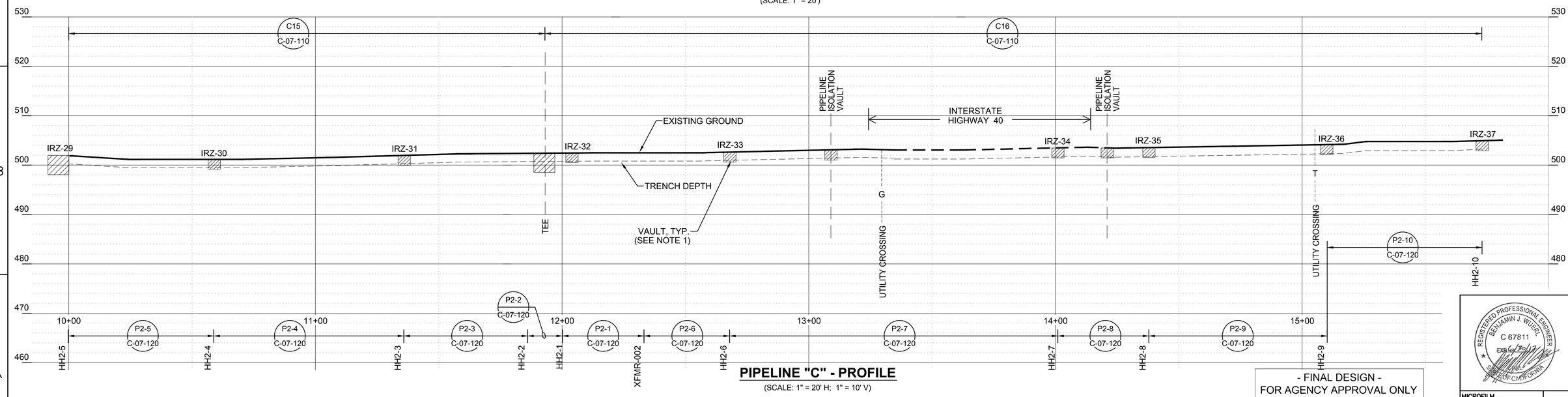

PIPELINE "C" - PROFILE

(SCALE: 1" = 20' H; 1" = 10' V)

- FINAL DESIGN -
FOR AGENCY APPROVAL ONLY

REGISTERED PROFESSIONAL ENGINEER
BENJAMIN J. WUERL
C 67811
EXP 6/30/17
STATE OF CALIFORNIA

ETIC ENGINEERING

ARCADIS

NO.	DATE	DESCRIPTION	GM/SPEC	DWN	CHKD	SUPV	APVD BY
2	11/18/15	FINAL DESIGN		AJW	WLM	BW	RAO
1	09/08/14	PRE-FINAL (90%) DESIGN		AJW	BAS	JPB	JEF
0	04/05/13	INTERMEDIATE (60%) DESIGN		AJW	KLD	JPB	JEF

REVISIONS

APPROVED BY	
RAO	SO
	SUPV
	DSGN
	DWN
	CHKD
	OK
	DATE
	SCALES

TOPOCK GROUNDWATER REMEDIATION PROJECT

PIPELINE - PLAN AND PROFILE
PIPELINE " C15" & "C16"
STA 10+00 TO STA 15+73

GAS TRANSMISSION & DISTRIBUTION
PACIFIC GAS AND ELECTRIC COMPANY
SAN FRANCISCO, CALIFORNIA

MICROFILM	
BILL OF MATL	
DWG LIST	
SUPSDS	
SUPSD BY	
SHEET NO.	of SHEETS
C-07-50	REV 2

N1808

11/02/2015, 15:39, G:\Graphics\ART\TOPOCK-011\Submittal_100%\DWGs\C-Civil\C-07-39 to 59_Plan&Profile.dwg, Tab: C-07-50

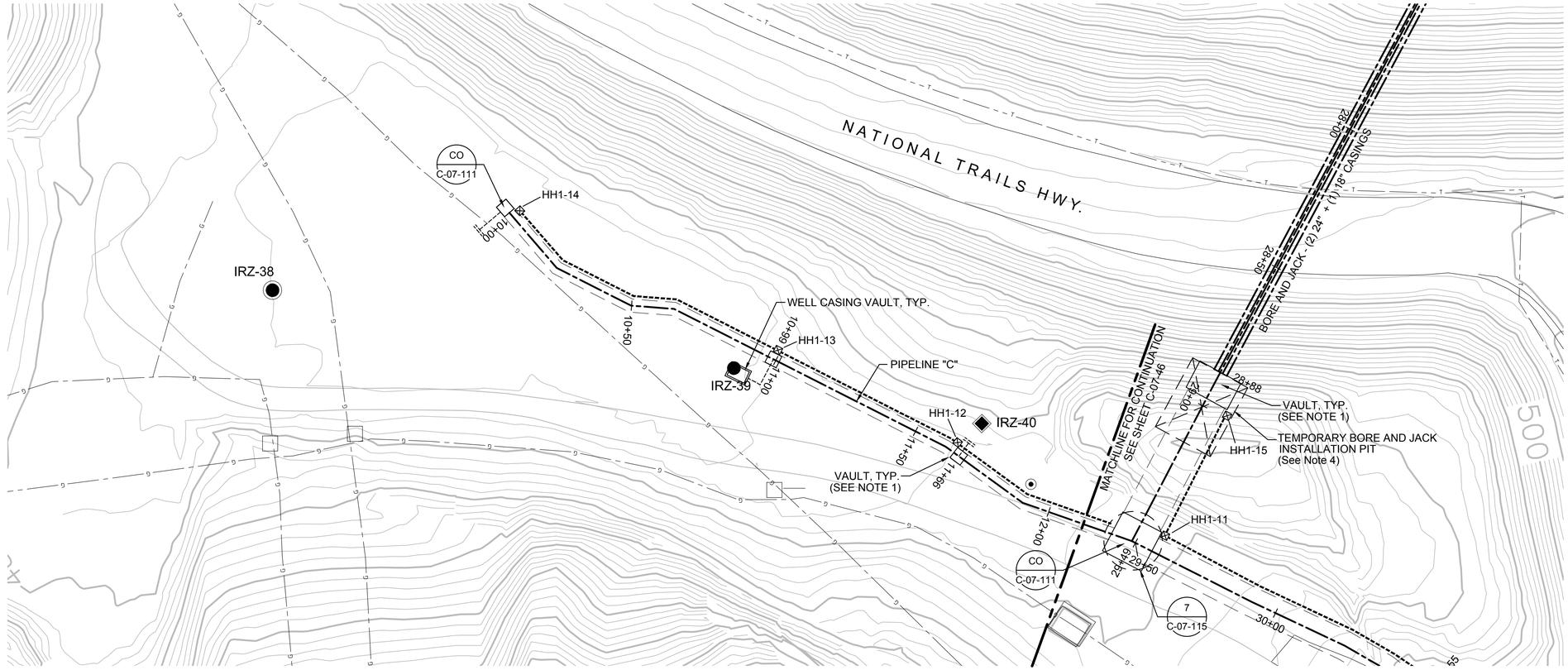

PIPELINE "C" - PLAN

(SCALE: 1" = 20')

NOTES:

1. VAULT DETAILS SHOWN IN AREA 4 OF THE MECHANICAL AND STRUCTURAL DRAWINGS.
2. SEE CONDUIT AND CABLE SCHEDULES AND SINGLE LINE DIAGRAMS ON SHEETS E-00-12 THRU E-00-20.
3. CLEANOUT LOCATIONS PROVIDE CLEANOUT PIPING FOR ALL INJECTION, EXTRACTION, BACKWASH, AND REMEDY-PRODUCED WATER LINES AT INDICATED LOCATIONS (SEE DETAIL C-00-08).
4. CONTRACTOR TO VERIFY BORE AND JACK INSTALLATION PIT SIZE DURING CONSTRUCTION.

HORIZ: SCALE: 1"=20'

VERT: SCALE: 1"=10'

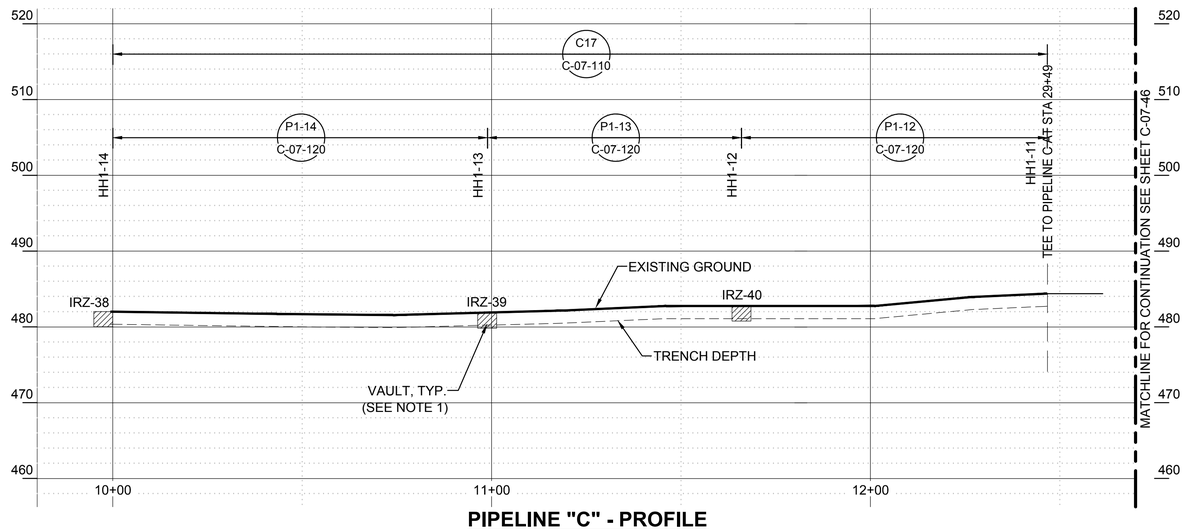

PIPELINE "C" - PROFILE

(SCALE: 1" = 20' H; 1" = 10' V)

- FINAL DESIGN - FOR AGENCY APPROVAL ONLY

REGISTERED PROFESSIONAL ENGINEER
BENJAMIN J. WUERL
C 67811
EXP 6/30/17
STATE OF CALIFORNIA

ETIC ENGINEERING

ARCADIS

NO.	DATE	DESCRIPTION	GM/SPEC	DWN	CHKD	SUPV	APVD BY
2	11/18/15	FINAL DESIGN		AJW	WLM	BW	RAO
1	09/08/14	PRE-FINAL (90%) DESIGN		AJW	BAS	JPB	JEF
0	04/05/13	INTERMEDIATE (60%) DESIGN		AJW	KLD	JPB	JEF

REVISIONS

APPROVED BY	
RAO	SO
	SUPV
	DSGN
	DWN
	CHKD
	OK
	DATE
	SCALES

TOPOCK GROUNDWATER REMEDIATION PROJECT

PIPELINE - PLAN AND PROFILE
PIPELINE "C17"
STA 10+00 TO STA 12+28

GAS TRANSMISSION & DISTRIBUTION
PACIFIC GAS AND ELECTRIC COMPANY
SAN FRANCISCO, CALIFORNIA

MICROFILM	
BILL OF MATL	
DWG LIST	
SUPSDS	
SUPSD BY	
SHEET NO.	of SHEETS
C-07-51	REV 2

N1808

11/02/2015, 15:40, G:\Graphics\ART\TOPOCK-011\Submittal_100%\DWGs\C-Civil\C-07-39 to 59_Plan&Profile.dwg, Tab: C-07-51

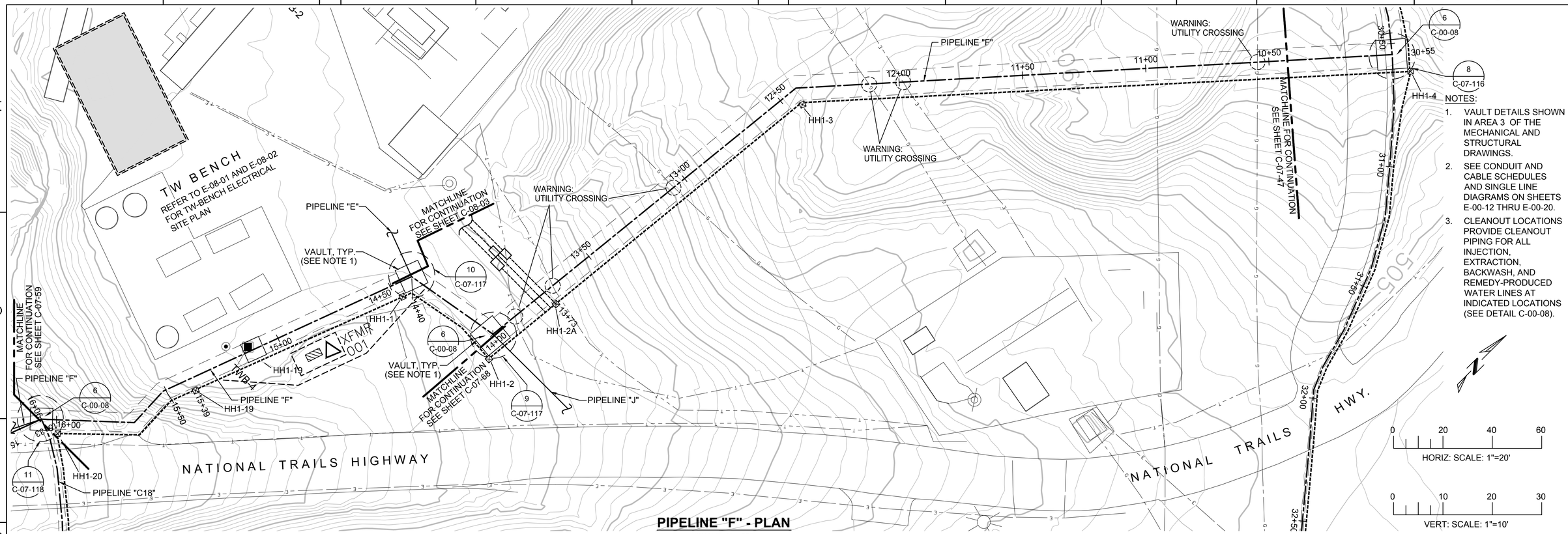

PIPELINE "F" - PLAN

(SCALE: 1" = 20')

NOTES:

1. VAULT DETAILS SHOWN IN AREA 3 OF THE MECHANICAL AND STRUCTURAL DRAWINGS.
2. SEE CONDUIT AND CABLE SCHEDULES AND SINGLE LINE DIAGRAMS ON SHEETS E-00-12 THRU E-00-20.
3. CLEANOUT LOCATIONS PROVIDE CLEANOUT PIPING FOR ALL INJECTION, EXTRACTION, BACKWASH, AND REMEDY-PRODUCED WATER LINES AT INDICATED LOCATIONS (SEE DETAIL C-00-08).

HORIZ: SCALE: 1"=20'

VERT: SCALE: 1"=10'

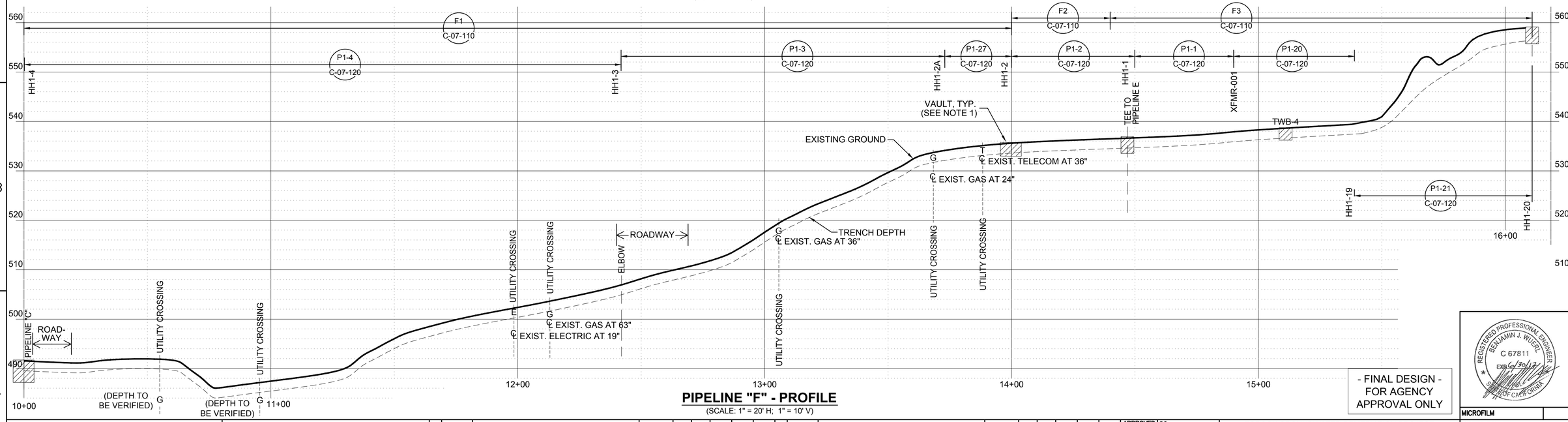

PIPELINE "F" - PROFILE

(SCALE: 1" = 20' H; 1" = 10' V)

- FINAL DESIGN - FOR AGENCY APPROVAL ONLY

REGISTERED PROFESSIONAL ENGINEER BENJAMIN J. WURL C 67811 Exp 6/30/17 STATE OF CALIFORNIA

ETIC ENGINEERING

ARCADIS

N1808

NO.	DATE	DESCRIPTION	GM/SPEC	DWN	CHKD	SUPV	APVD BY
3	11/18/15	FINAL DESIGN	AJW	WLM	BW	RAO	
2	8/5/15	90% RTC RESOLUTION	AJW	KLD	WLM	BJW	
1	09/08/14	PRE-FINAL (90%) DESIGN	AJW	BAS	JPB	JEF	
0	04/05/13	INTERMEDIATE (60%) DESIGN	AJW	KLD	JPB	JEF	

REVISIONS

APPROVED BY	
RAO	SO
	SUPV
	DSGN
	DWN
	CHKD
	OK
	DATE
	SCALES

TOPOCK GROUNDWATER REMEDIATION PROJECT

PIPELINE - PLAN AND PROFILE PIPELINE "F" STA 10+00 TO STA 16+11

GAS TRANSMISSION & DISTRIBUTION

PACIFIC GAS AND ELECTRIC COMPANY
SAN FRANCISCO, CALIFORNIA

MICROFILM	
BILL OF MATL	
DWG LIST	
SUPSDS	
SUPSD BY	
SHEET NO.	of SHEETS
C-07-52	REV 3

11/02/2015, 15:40, G:\Graphics\ARTOPOCK-01\Submittal_100%\DWGs\C-Civil\C-07-39 to 59_Plan&Profile.dwg, Tab: C-07-52

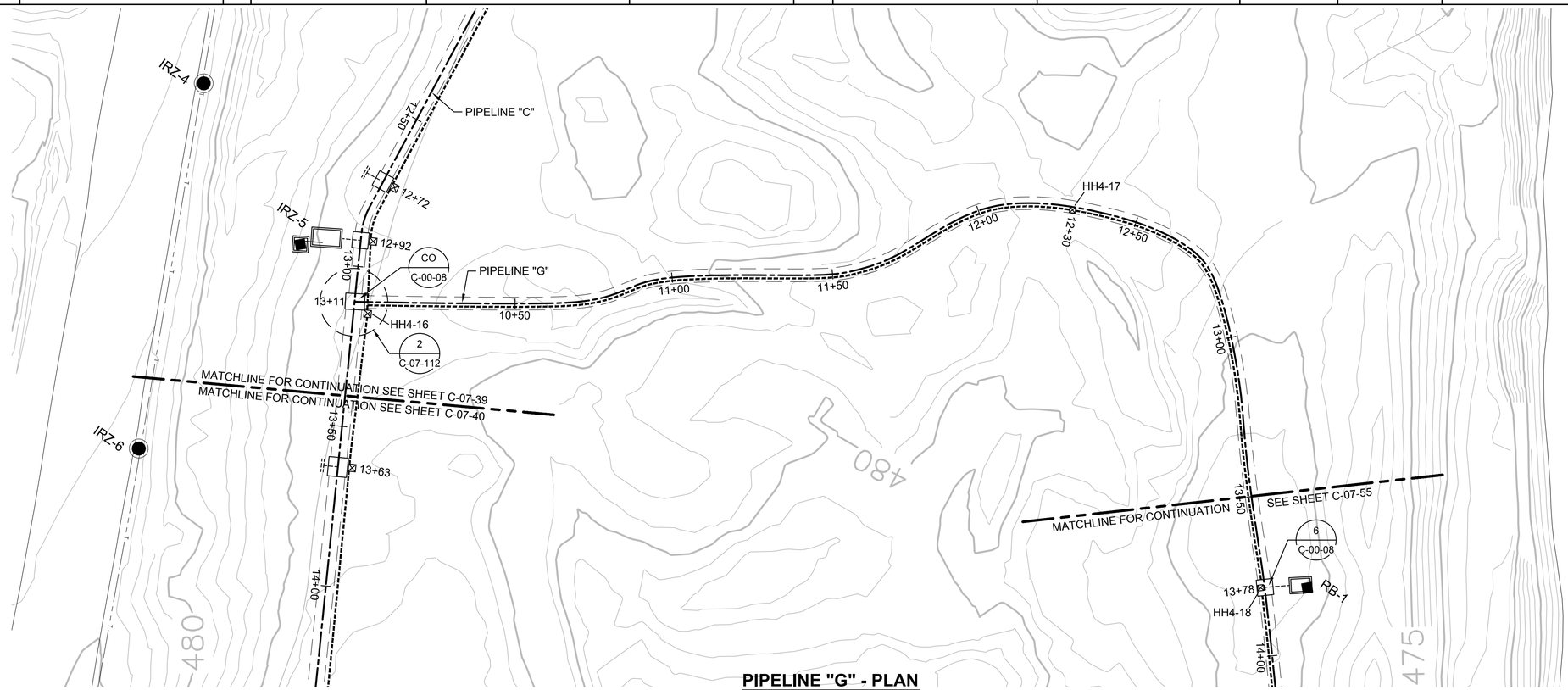

PIPELINE "G" - PLAN

(SCALE: 1" = 20')

NOTES:

1. VAULT DETAILS SHOWN IN AREA 5 OF THE MECHANICAL AND STRUCTURAL DRAWINGS.
2. SEE CONDUIT AND CABLE SCHEDULES AND SINGLE LINE DIAGRAMS ON SHEETS E-00-12 THRU E-00-20.
3. CLEANOUT LOCATIONS PROVIDE CLEANOUT PIPING FOR ALL INJECTION, EXTRACTION, BACKWASH, AND REMEDY-PRODUCED WATER LINES AT INDICATED LOCATIONS (SEE DETAIL C-00-08).

HORIZ: SCALE: 1"=20'

VERT: SCALE: 1"=10'

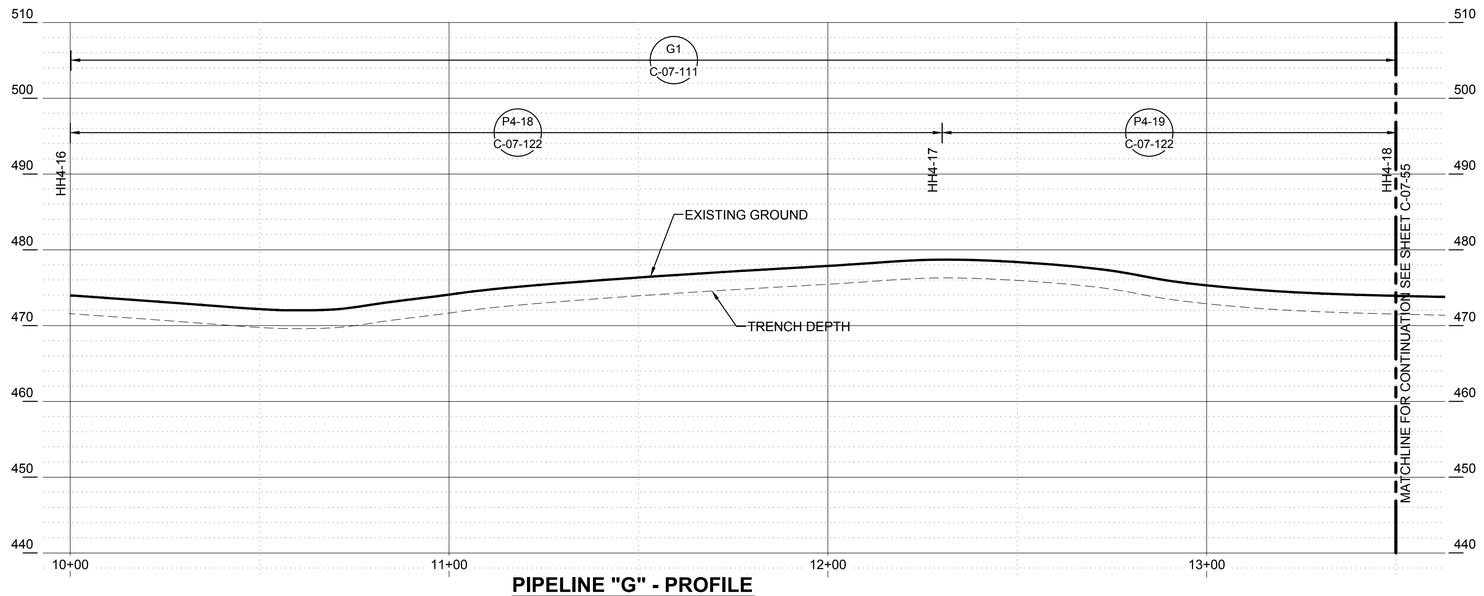

PIPELINE "G" - PROFILE

(SCALE: 1" = 20' H; 1" = 10' V)

- FINAL DESIGN - FOR AGENCY APPROVAL ONLY

REGISTERED PROFESSIONAL ENGINEER BENJAMIN J. WUERL C 67811 EXP 6/30/17 STATE OF CALIFORNIA

ETIC ENGINEERING

ARCADIS

NO.	DATE	DESCRIPTION	GM/SPEC	DWN	CHKD	SUPV	APVD BY
2	11/18/15	FINAL DESIGN		AJW	WLM	BW	RAO
1	09/08/14	PRE-FINAL (90%) DESIGN		AJW	BAS	JPB	JEF
0	04/05/13	INTERMEDIATE (60%) DESIGN		AJW	KLD	JPB	JEF

REVISIONS

APPROVED BY	
RAO	SO
	SUPV
	DSGN
	DWN
	CHKD
	OK
	DATE
	SCALES

TOPOCK GROUNDWATER REMEDIATION PROJECT

PIPELINE - PLAN AND PROFILE
PIPELINE "G1"
STA 10+00 TO STA 13+50
GAS TRANSMISSION & DISTRIBUTION
PACIFIC GAS AND ELECTRIC COMPANY
SAN FRANCISCO, CALIFORNIA

MICROFILM	
BILL OF MATL	
DWG LIST	
SUPSDS	
SUPSD BY	
SHEET NO.	of SHEETS
C-07-54	REV 2

N1808

11/02/2015, 15:40, G:\Graphics\ART\TOPOCK-01\Submittal_100%\DWGs\C-Civil\C-07-39 to 59_Plan&Profile.dwg, Tab: C-07-54

NOTES:

1. VAULT DETAILS SHOWN IN AREA 5 OF THE MECHANICAL AND STRUCTURAL DRAWINGS.
2. SEE CONDUIT AND CABLE SCHEDULES AND SINGLE LINE DIAGRAMS ON SHEETS E-00-12 THRU E-00-20.
3. CLEANOUT LOCATIONS PROVIDE CLEANOUT PIPING FOR ALL INJECTION, EXTRACTION, BACKWASH, AND REMEDY-PRODUCED WATER LINES AT INDICATED LOCATIONS (SEE DETAIL C-00-08).

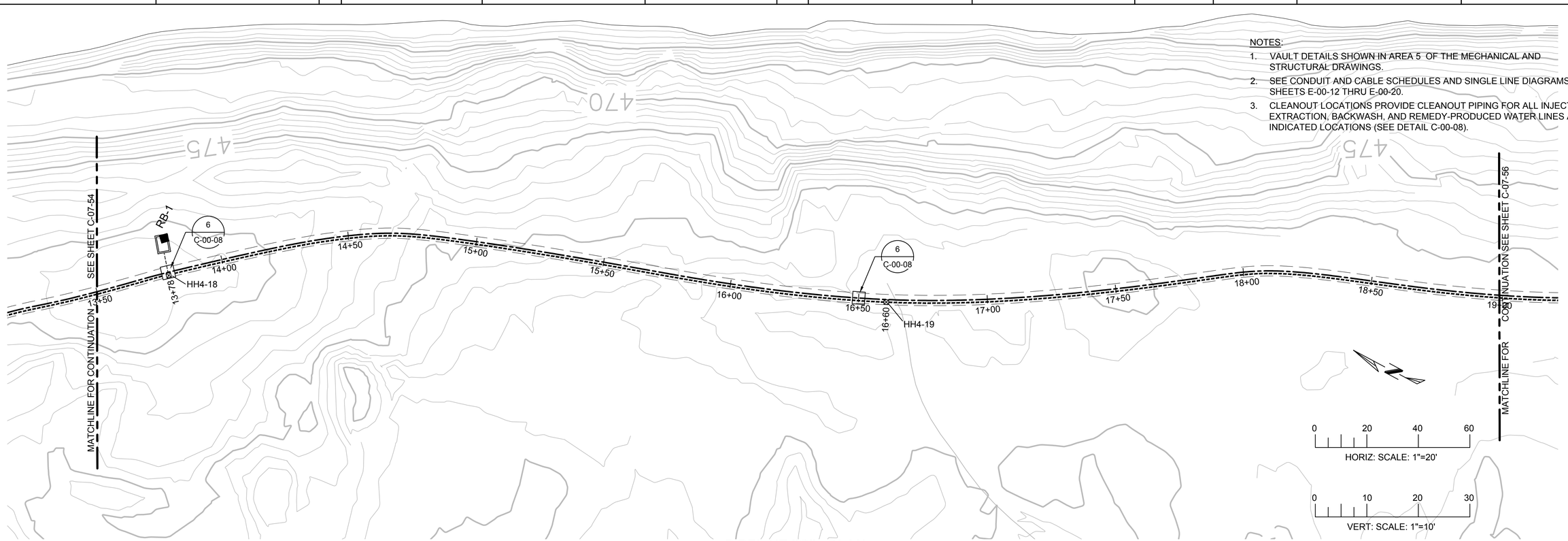

PIPELINE "G" - PLAN

(SCALE: 1" = 20')

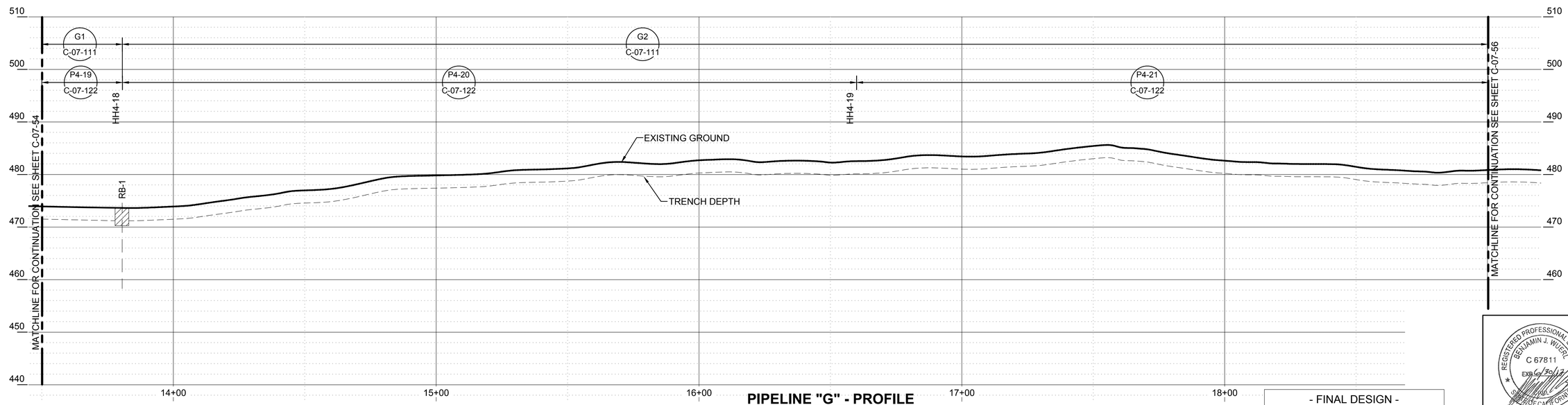

PIPELINE "G" - PROFILE

(SCALE: 1" = 20' H; 1" = 10' V)

- FINAL DESIGN -
FOR AGENCY APPROVAL ONLY

REGISTERED PROFESSIONAL ENGINEER
BENJAMIN J. WUEST
C 67811
EXP 6/30/17
STATE OF CALIFORNIA

ETIC ENGINEERING

ARCADIS

NO.	DATE	DESCRIPTION	GM/SPEC	DWN	CHKD	SUPV	APVD BY
2	11/18/15	FINAL DESIGN		AJW	WLM	BW	RAO
1	09/08/14	PRE-FINAL (90%) DESIGN		AJW	BAS	JPB	JEF
0	04/05/13	INTERMEDIATE (60%) DESIGN		AJW	KLD	JPB	JEF

REVISIONS

APPROVED BY	
	SO
RAO	SUPV
	DSGN
	DWN
	CHKD
	OK
	DATE
	SCALES

TOPOCK GROUNDWATER REMEDIATION PROJECT

PIPELINE - PLAN AND PROFILE
PIPELINE "G2" & "G3"
STA 13+50 TO STA 19+00

GAS TRANSMISSION & DISTRIBUTION
PACIFIC GAS AND ELECTRIC COMPANY
SAN FRANCISCO, CALIFORNIA

MICROFILM	
BILL OF MATL	
DWG LIST	
SUPSDS	
SUPSD BY	
SHEET NO.	of SHEETS
C-07-55	REV 2

11/02/2015, 15:40, G:\Graphics\ARI\TOPOCK-01\Submittal_100%\DWGs\C-Civil\C-07-39 to 59_Plan&Profile.dwg, Tab: C-07-55

N1808

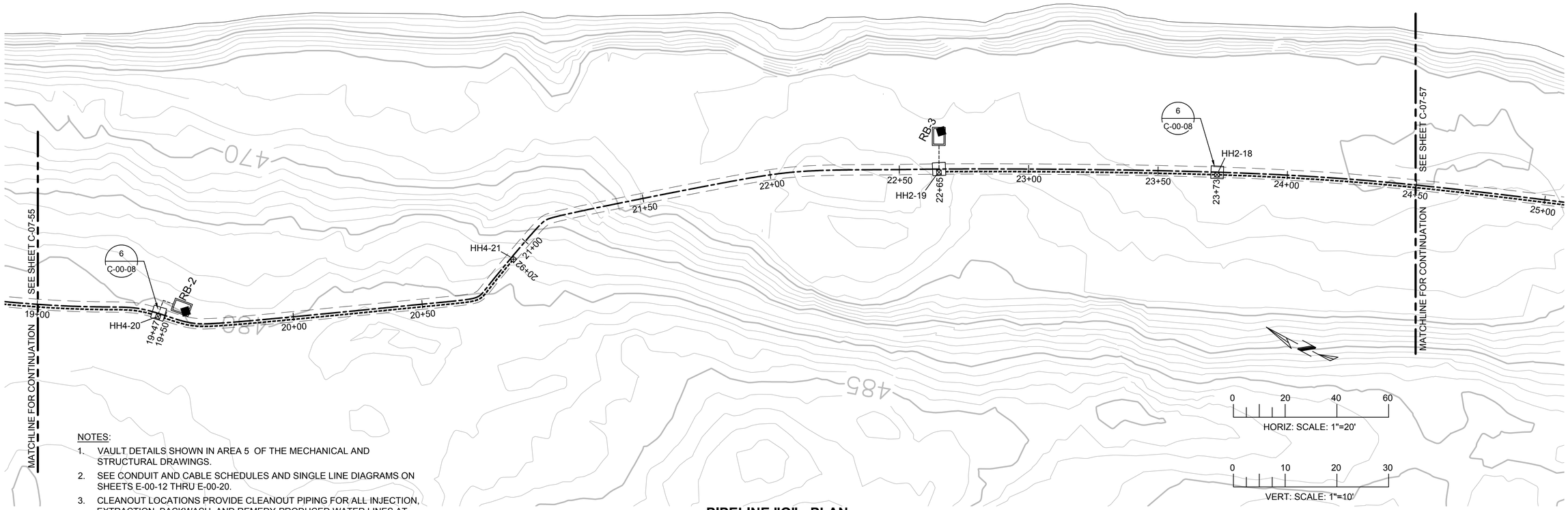

NOTES:

1. VAULT DETAILS SHOWN IN AREA 5 OF THE MECHANICAL AND STRUCTURAL DRAWINGS.
2. SEE CONDUIT AND CABLE SCHEDULES AND SINGLE LINE DIAGRAMS ON SHEETS E-00-12 THRU E-00-20.
3. CLEANOUT LOCATIONS PROVIDE CLEANOUT PIPING FOR ALL INJECTION, EXTRACTION, BACKWASH, AND REMEDY-PRODUCED WATER LINES AT INDICATED LOCATIONS (SEE DETAIL C-00-08).

0 20 40 60
HORIZ: SCALE: 1"=20'

0 10 20 30
VERT: SCALE: 1"=10'

PIPELINE "G" - PLAN

(SCALE: 1" = 20')

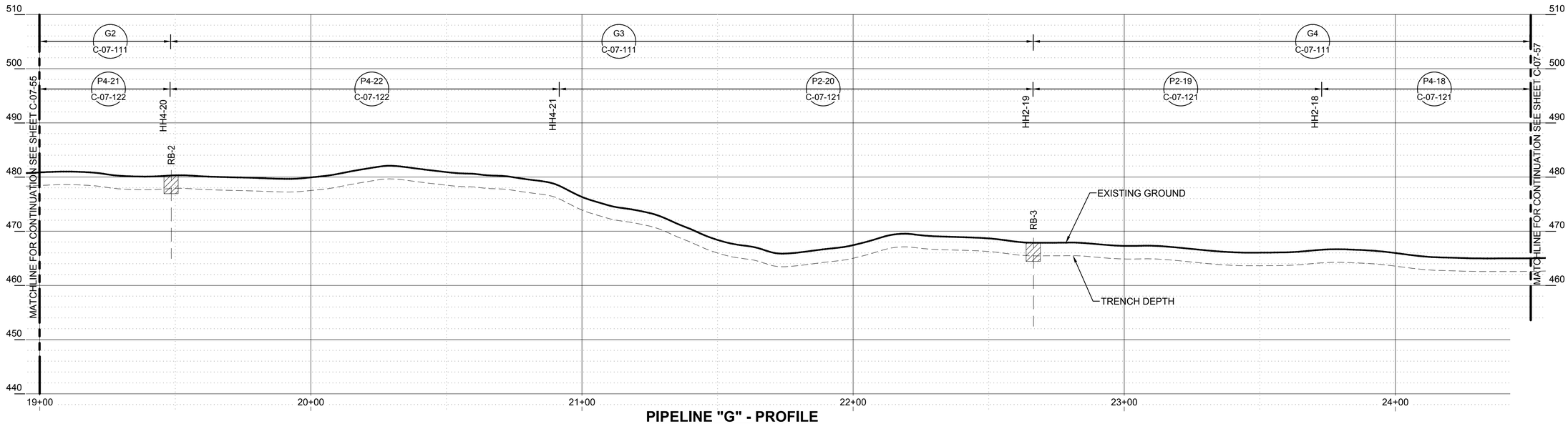

PIPELINE "G" - PROFILE

(SCALE: 1" = 20' H; 1" = 10' V)

- FINAL DESIGN - FOR AGENCY APPROVAL ONLY

REGISTERED PROFESSIONAL ENGINEER
BENJAMIN J. WUERL
C 67811
Exp 6/30/17
STATE OF CALIFORNIA

ETIC ENGINEERING

ARCADIS

NO.	DATE	DESCRIPTION	GM/SPEC	DWN	CHKD	SUPV	APVD BY
2	11/18/15	FINAL DESIGN		AJW	WLM	BW	RAO
1	09/08/14	PRE-FINAL (90%) DESIGN		AJW	BAS	JPB	JEF
0	04/05/13	INTERMEDIATE (60%) DESIGN		AJW	KLD	JPB	JEF

REVISIONS

APPROVED BY	
RAO	SO
	SUPV
	DSGN
	DWN
	CHKD
	OK
	DATE
	SCALES

TOPOCK GROUNDWATER REMEDIATION PROJECT

PIPELINE - PLAN AND PROFILE
PIPELINE "G2", "G3", & G4"
STA 19+50 TO STA 24+50

GAS TRANSMISSION & DISTRIBUTION
PACIFIC GAS AND ELECTRIC COMPANY
SAN FRANCISCO, CALIFORNIA

MICROFILM	
BILL OF MATL	
DWG LIST	
SUPSDS	
SUPSD BY	
SHEET NO.	of SHEETS
C-07-56	REV 2

N1808

11/02/2015, 15:41, G:\Graphics\AR\TOPOCK-01\Submittal_100%\DWGs\C-Civil\C-07-39 to 59_Plan&Profile.dwg, Tab: C-07-56

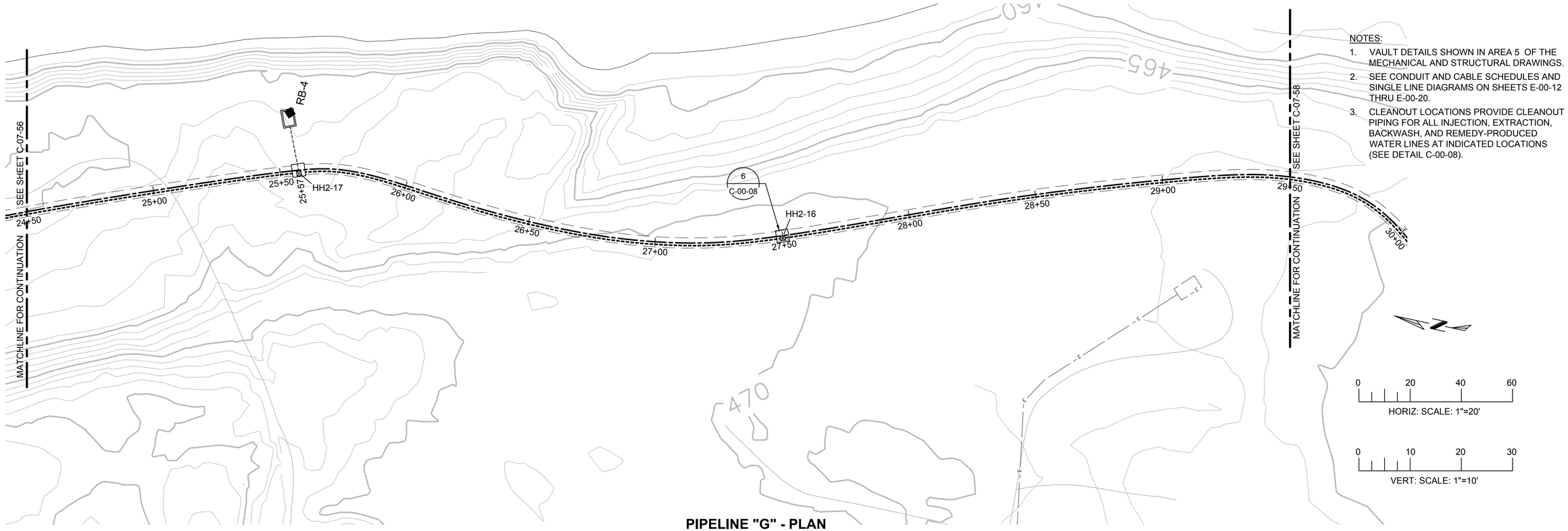

NOTES:

1. VAULT DETAILS SHOWN IN AREA 5 OF THE MECHANICAL AND STRUCTURAL DRAWINGS.
2. SEE CONDUIT AND CABLE SCHEDULES AND SINGLE LINE DIAGRAMS ON SHEETS E-00-12 THRU E-00-20.
3. CLEANOUT LOCATIONS PROVIDE CLEANOUT PIPING FOR ALL INJECTION, EXTRACTION, BACKWASH, AND REMEDY-PRODUCED WATER LINES AT INDICATED LOCATIONS (SEE DETAIL C-00-08).

0 20 40 60
HORIZ: SCALE: 1"=20'

0 10 20 30
VERT: SCALE: 1"=10'

PIPELINE "G" - PLAN

(SCALE: 1" = 20')

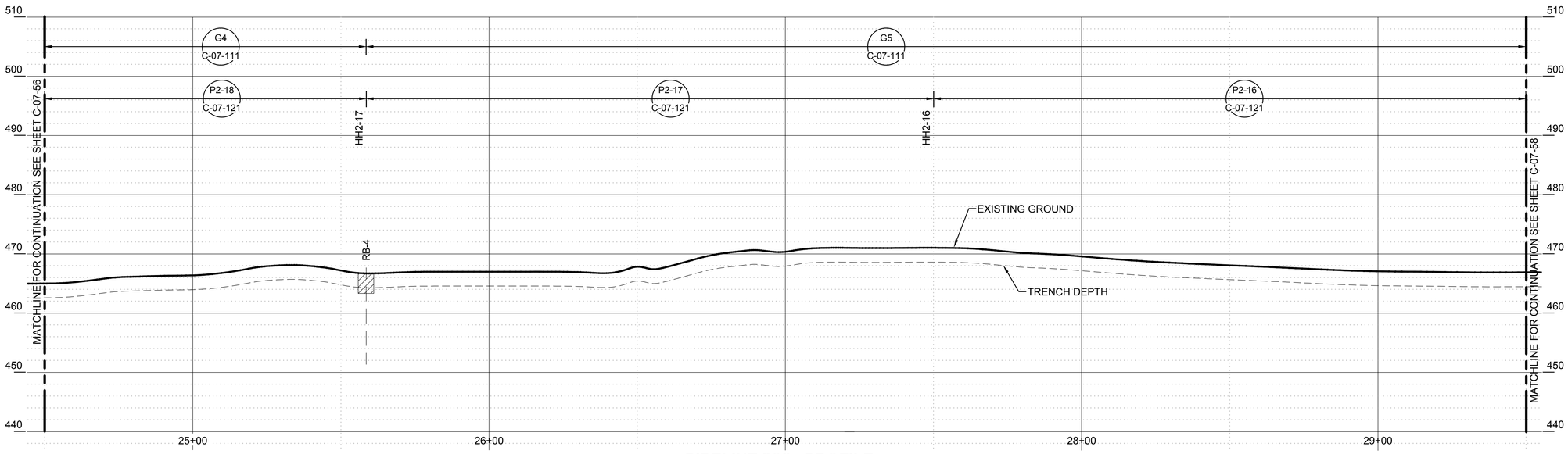

PIPELINE "G" - PROFILE

(SCALE: 1" = 20' H; 1" = 10' V)

- FINAL DESIGN - FOR AGENCY APPROVAL ONLY

REGISTERED PROFESSIONAL ENGINEER
BENJAMIN J. WUERL
C 67811
EXP 6/30/17
STATE OF CALIFORNIA

ETIC ENGINEERING

ARCADIS

NO.	DATE	DESCRIPTION	GM/SPEC	DWN	CHKD	SUPV	APVD BY
2	11/18/15	FINAL DESIGN		AJW	WLM	BW	RAO
1	09/08/14	PRE-FINAL (90%) DESIGN		AJW	BAS	JPB	JEF
0	04/05/13	INTERMEDIATE (60%) DESIGN		AJW	KLD	JPB	JEF

REVISIONS

APPROVED BY	
	SO
RAO	SUPV
	DSGN
	DWN
	CHKD
	OK
	DATE
	SCALES

TOPOCK GROUNDWATER REMEDIATION PROJECT

PIPELINE - PLAN AND PROFILE PIPELINE "G4" & "G5" STA 24+50 TO STA 29+50

GAS TRANSMISSION & DISTRIBUTION

PACIFIC GAS AND ELECTRIC COMPANY
SAN FRANCISCO, CALIFORNIA

MICROFILM	
BILL OF MATL	
DWG LIST	
SUPSDS	
SUPSD BY	
SHEET NO.	of SHEETS
C-07-57	REV 2

11/02/2015, 15:41, G:\Graphics\AR\TOPOCK-011Submittal_100%\DWGs\C-Civil\C-07-39 to 59_Plan&Profile.dwg, Tab: C-07-57

N1808

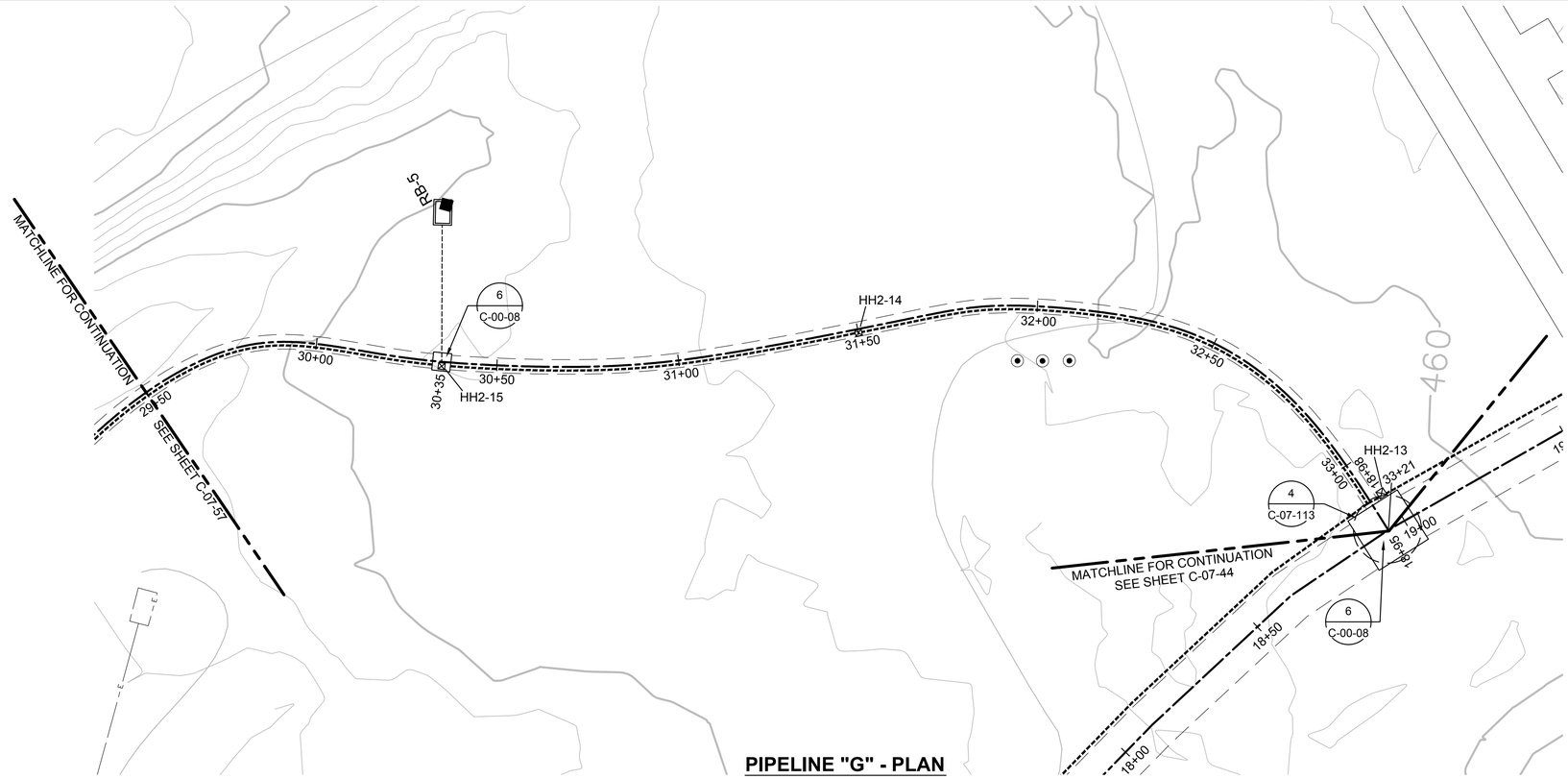

PIPELINE "G" - PLAN

(SCALE: 1" = 20')

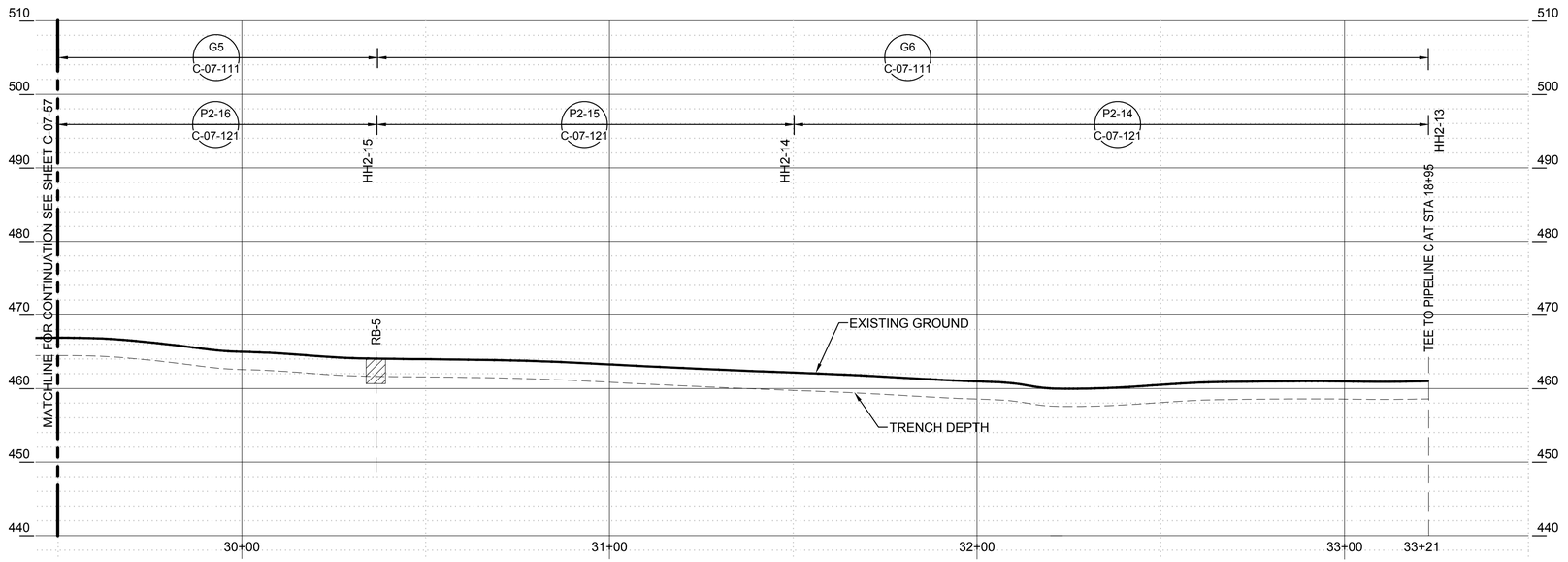

PIPELINE "G" - PROFILE

(SCALE: 1" = 20' H; 1" = 10' V)

NOTES:

1. VAULT DETAILS SHOWN IN AREA 5 OF THE MECHANICAL AND STRUCTURAL DRAWINGS.
2. SEE CONDUIT AND CABLE SCHEDULES AND SINGLE LINE DIAGRAMS ON SHEETS E-00-12 THRU E-00-20.
3. CLEANOUT LOCATIONS PROVIDE CLEANOUT PIPING FOR ALL INJECTION, EXTRACTION, BACKWASH, AND REMEDY-PRODUCED WATER LINES AT INDICATED LOCATIONS (SEE DETAIL C-00-08).

0 20 40 60
HORIZ: SCALE: 1"=20'

0 10 20 30
VERT: SCALE: 1"=10'

- FINAL DESIGN - FOR AGENCY APPROVAL ONLY

REGISTERED PROFESSIONAL ENGINEER
BENJAMIN J. WUERL
C 67811
EXP 6/30/17
STATE OF CALIFORNIA

ETIC ENGINEERING

ARCADIS

NO.	DATE	DESCRIPTION	GM/SPEC	DWN	CHKD	SUPV	APVD BY
2	11/18/15	FINAL DESIGN		AJW	WLM	BW	RAO
1	09/08/14	PRE-FINAL (90%) DESIGN		AJW	BAS	JPB	JEF
0	04/05/13	INTERMEDIATE (60%) DESIGN		AJW	KLD	JPB	JEF

REVISIONS

APPROVED BY	
RAO	SO
	SUPV
	DSGN
	DWN
	CHKD
	OK
	DATE
	SCALES

TOPOCK GROUNDWATER REMEDIATION PROJECT

PIPELINE - PLAN AND PROFILE PIPELINE "G5" & "G6" STA 29+50 TO STA 33+21

GAS TRANSMISSION & DISTRIBUTION

PACIFIC GAS AND ELECTRIC COMPANY
SAN FRANCISCO, CALIFORNIA

MICROFILM	
BILL OF MATL	
DWG LIST	
SUPSDS	
SUPSD BY	
SHEET NO.	of SHEETS
C-07-58	REV 2

N1608

11/02/2015, 15:41, G:\Graphics\AR\TOPOCK-011\Submittal_100%\DWGs\C-Civil\C-07-39 to 59_Plan&Profile.dwg, Tab: C-07-58

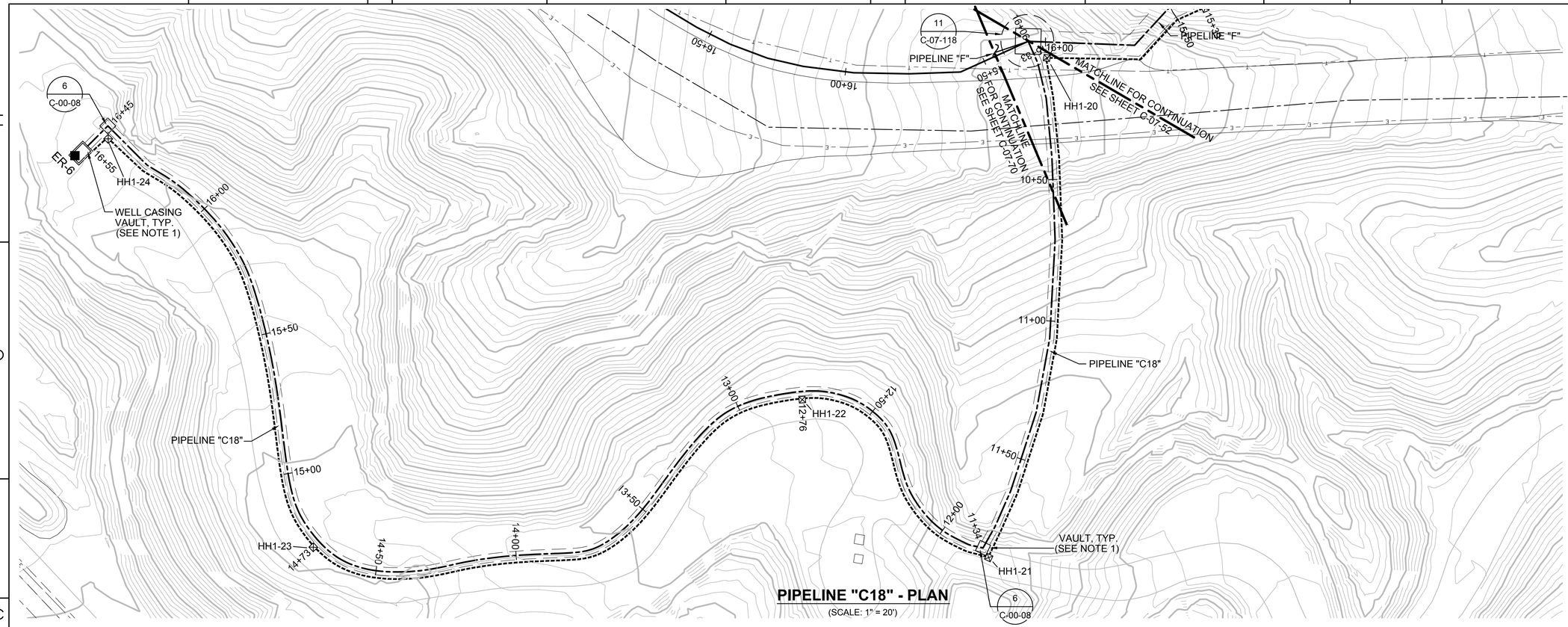

PIPELINE "C18" - PLAN

(SCALE: 1" = 20')

NOTES:

1. VAULT DETAILS SHOWN IN AREA 5 OF THE MECHANICAL AND STRUCTURAL DRAWINGS.
2. SEE CONDUIT AND CABLE SCHEDULES AND SINGLE LINE DIAGRAMS ON SHEETS E-00-12 THRU E-00-20.
3. CLEANOUT LOCATIONS PROVIDE CLEANOUT PIPING FOR ALL INJECTION, EXTRACTION, BACKWASH, AND REMEDY-PRODUCED WATER LINES AT INDICATED LOCATIONS (SEE DETAIL C-00-08).

HORIZ: SCALE: 1"=20'

VERT: SCALE: 1"=10'

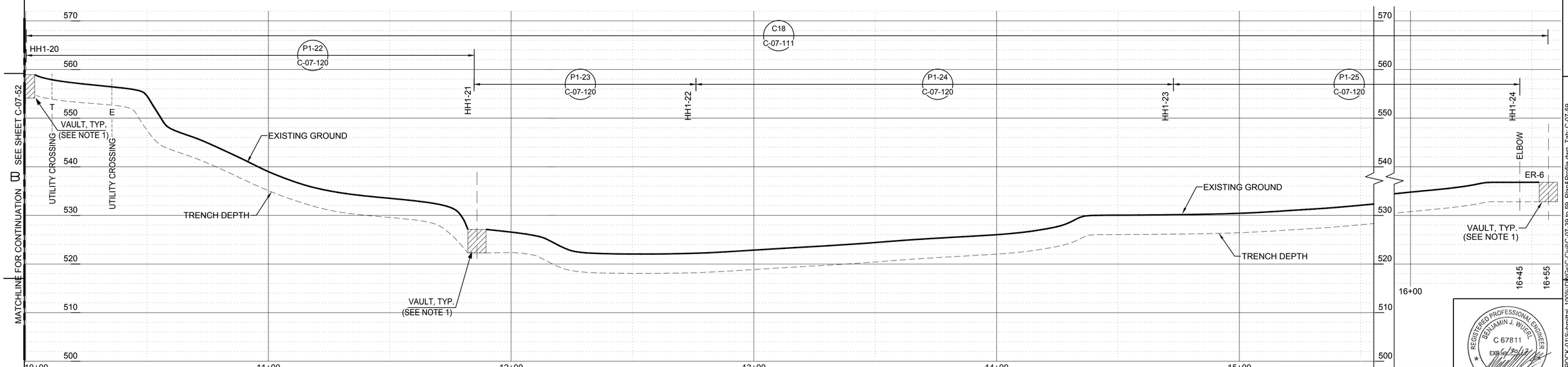

PIPELINE "C18" - PROFILE

(SCALE: 1" = 20' H; 1" = 10' V)

- FINAL DESIGN -
FOR AGENCY APPROVAL ONLY

REGISTERED PROFESSIONAL ENGINEER
BENJAMIN J. WUESL
C 67811
EXP 6/30/17
CIVIL
STATE OF CALIFORNIA

ETIC ENGINEERING

ARCADIS

NO.	DATE	DESCRIPTION	GM/SPEC	DWN	CHKD	SUPV	APVD BY
2	11/18/15	FINAL DESIGN		AJW	WLM	BW	RAO
1	09/08/14	PRE-FINAL (90%) DESIGN		AJW	BAS	JPB	JEF
0	04/05/13	INTERMEDIATE (60%) DESIGN		AJW	KLD	JPB	JEF

REVISIONS

APPROVED BY	SO
	SUPV
RAO	DSGN
	DWN
	CHKD
	OK
	DATE
	SCALES

TOPOCK GROUNDWATER REMEDIATION PROJECT

PIPELINE - PLAN AND PROFILE
PIPELINE "C18"
STA 10+00 TO STA 16+55

GAS TRANSMISSION & DISTRIBUTION
PACIFIC GAS AND ELECTRIC COMPANY
SAN FRANCISCO, CALIFORNIA

MICROFILM	
BILL OF MATL	
DWG LIST	
SUPSDS	
SUPSD BY	
SHEET NO.	of SHEETS
C-07-59	REV 2

N1808

11/02/2015, 15:41, G:\Graphics\ARITOPOCK-01\Submittal_100%\DWGs\C-Civil\C-07-39 to 59_Plan&Profile.dwg, Tab: C-07-59

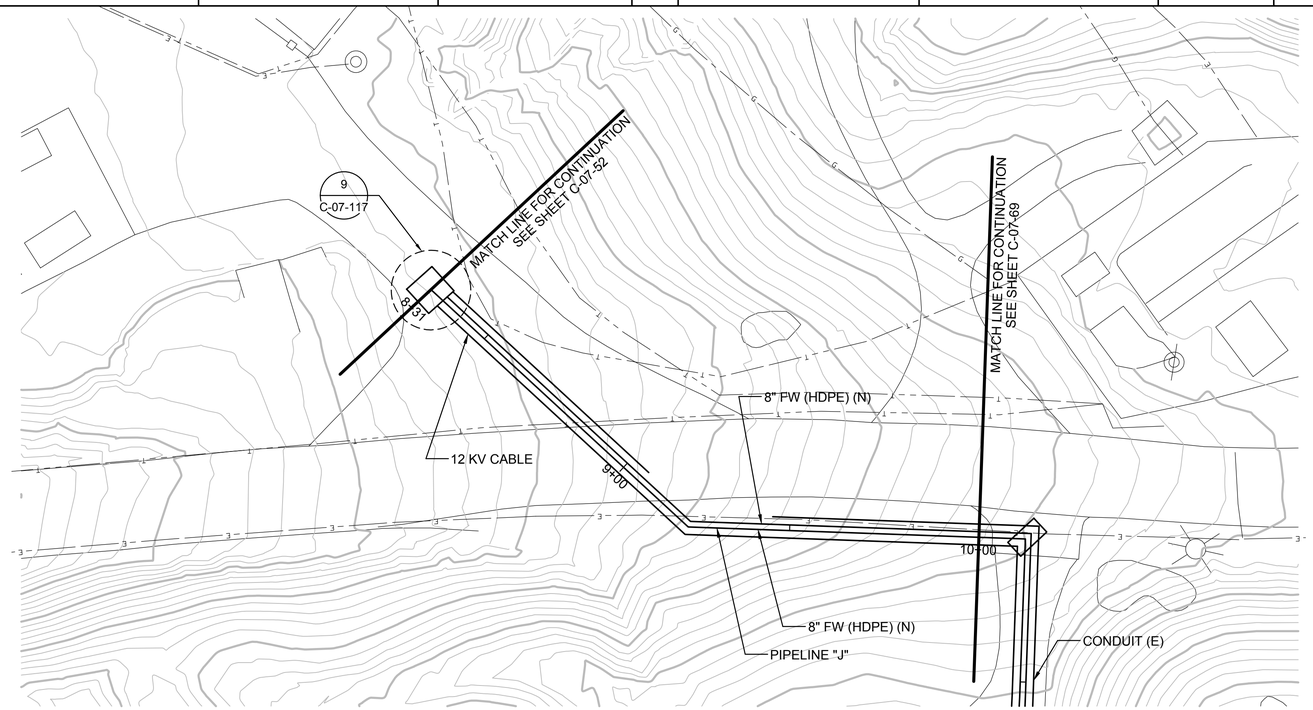

PIPELINE "J" - PLAN

(SCALE: 1" = 20')

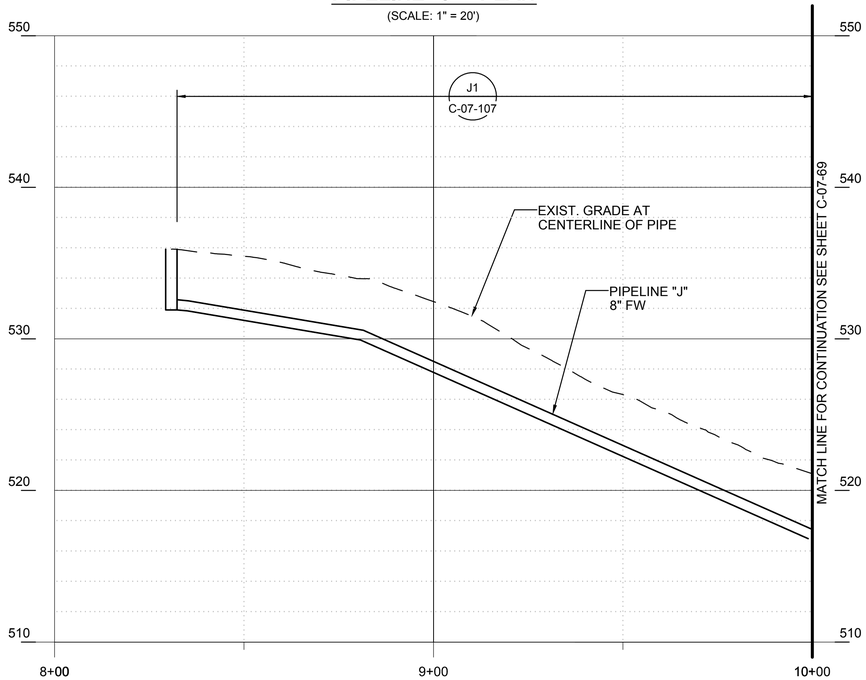

PIPELINE "J" - PROFILE

(SCALE: 1" = 20' H; 1" = 5' V)

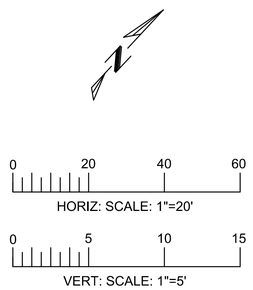

- FINAL DESIGN -
FOR AGENCY
APPROVAL ONLY

REGISTERED PROFESSIONAL ENGINEER
BENJAMIN J. WUERL
C 67811
EXP 6/30/17
CIVIL
STATE OF CALIFORNIA

ETIC ENGINEERING

ARCADIS

NO.	DATE	DESCRIPTION	GM/SPEC	DWN	CHKD	SUPV	APVD BY
1	11/18/15	FINAL DESIGN	AJW	WLM	BW	RAO	
0	9/8/14	PRE-FINAL (90%) DESIGN					

REVISIONS

APPROVED BY	
RAO	SO
	SUPV
	DSGN
	DWN
	CHKD
	OK
	DATE
	SCALES

TOPOCK GROUNDWATER REMEDIATION PROJECT

PLAN AND PROFILE
PIPELINE "J"
STA 8+31 TO STA 10+00

GAS TRANSMISSION & DISTRIBUTION

PACIFIC GAS AND ELECTRIC COMPANY
SAN FRANCISCO, CALIFORNIA

MICROFILM	
BILL OF MATL	
DWG LIST	
SUPSDS	
SUPSD BY	
SHEET NO. of	SHEETS
C-07-68	REV 1

N1808

NOTES:
1. 12KV SPLICE BOX PER PG&E STANDARD 062000, HEAVY FULL TRAFFIC, 3'x4'X4'-6" INSIDE DIMENSIONS.
2. 480V HANDHOLE PER PG&E STANDARD 062000, HEAVY FULL TRAFFIC, 3'x5'x3'-6" INSIDE DIMENSIONS.

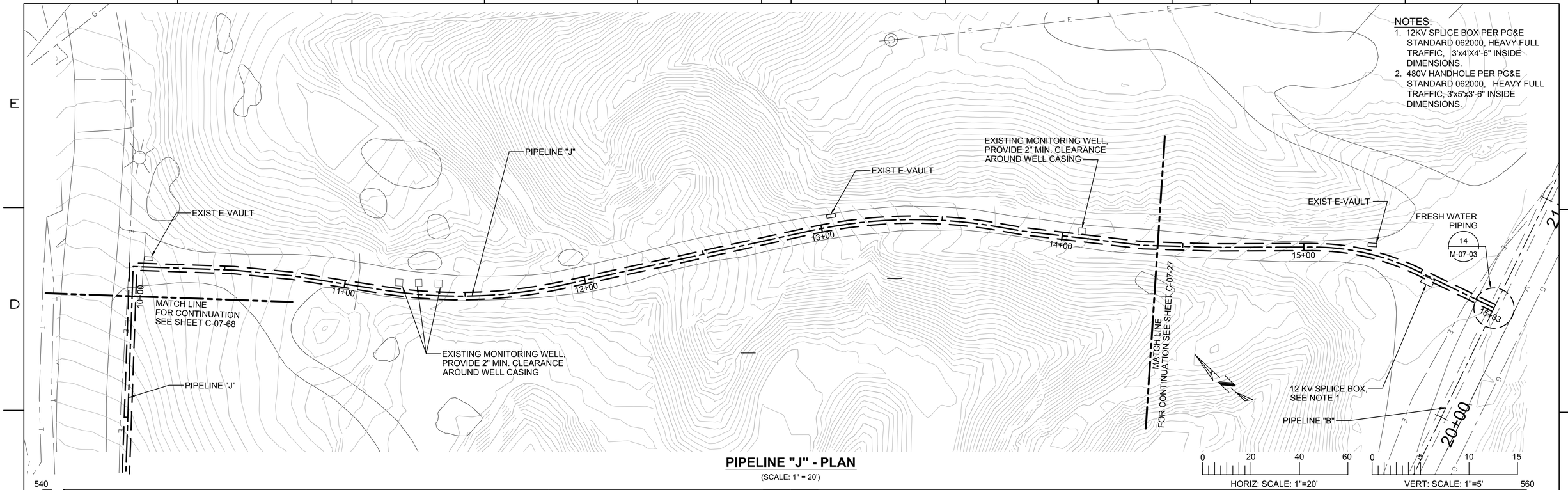

PIPELINE "J" - PLAN

(SCALE: 1" = 20')

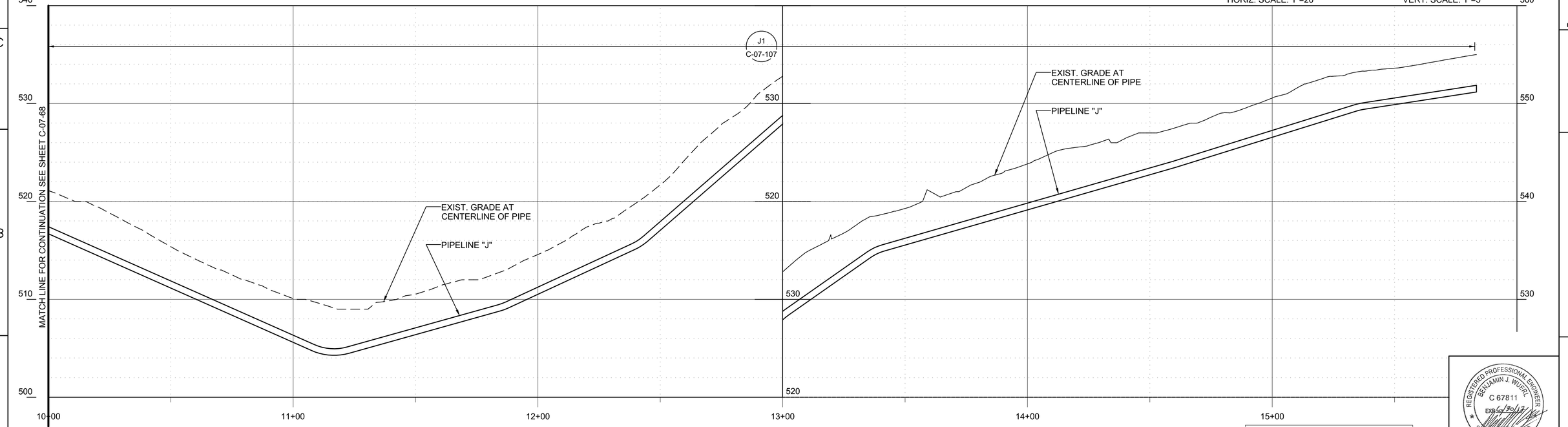

PIPELINE "J" - PROFILE

(SCALE: 1" = 20' H; 1" = 5' V)

- FINAL DESIGN - FOR AGENCY APPROVAL ONLY

REGISTERED PROFESSIONAL ENGINEER BENJAMIN J. WUERL C 67811 EXP 6/30/17 CIVIL STATE OF CALIFORNIA

ETIC ENGINEERING

ARCADIS

NO.	DATE	DESCRIPTION	GM/SPEC	DWN	CHKD	SUPV	APVD BY
3	11/18/15	FINAL DESIGN	AJW	WLM	BW	RAO	
2	8/5/15	90% RTC RESOLUTION	AJW	KLD	WLM	BJW	
1	9/8/14	PRE-FINAL (90%) DESIGN					
0	4/5/13	INTERMEDIATE (60%) DESIGN					

REVISIONS

APPROVED BY	
RAO	SO
	SUPV
	DSGN
	DWN
	CHKD
	OK
	DATE
	SCALES

TOPOCK GROUNDWATER REMEDIATION PROJECT

PLAN AND PROFILE
PIPELINE "J"
STA 10+04 TO STA 15+83
GAS TRANSMISSION & DISTRIBUTION
PACIFIC GAS AND ELECTRIC COMPANY
SAN FRANCISCO, CALIFORNIA

MICROFILM	
BILL OF MATL	
DWG LIST	
SUPSDS	
SUPSD BY	
SHEET NO. of SHEETS	
C-07-69	REV 3

N1808

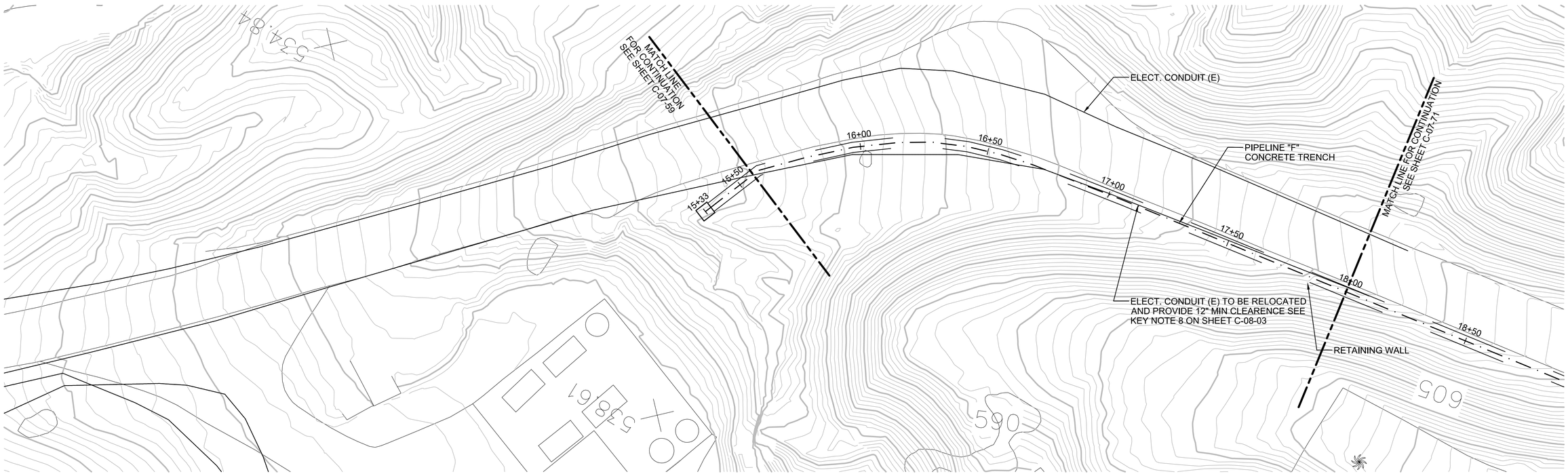

PIPELINE "F" - PLAN

(SCALE: 1" = 20')

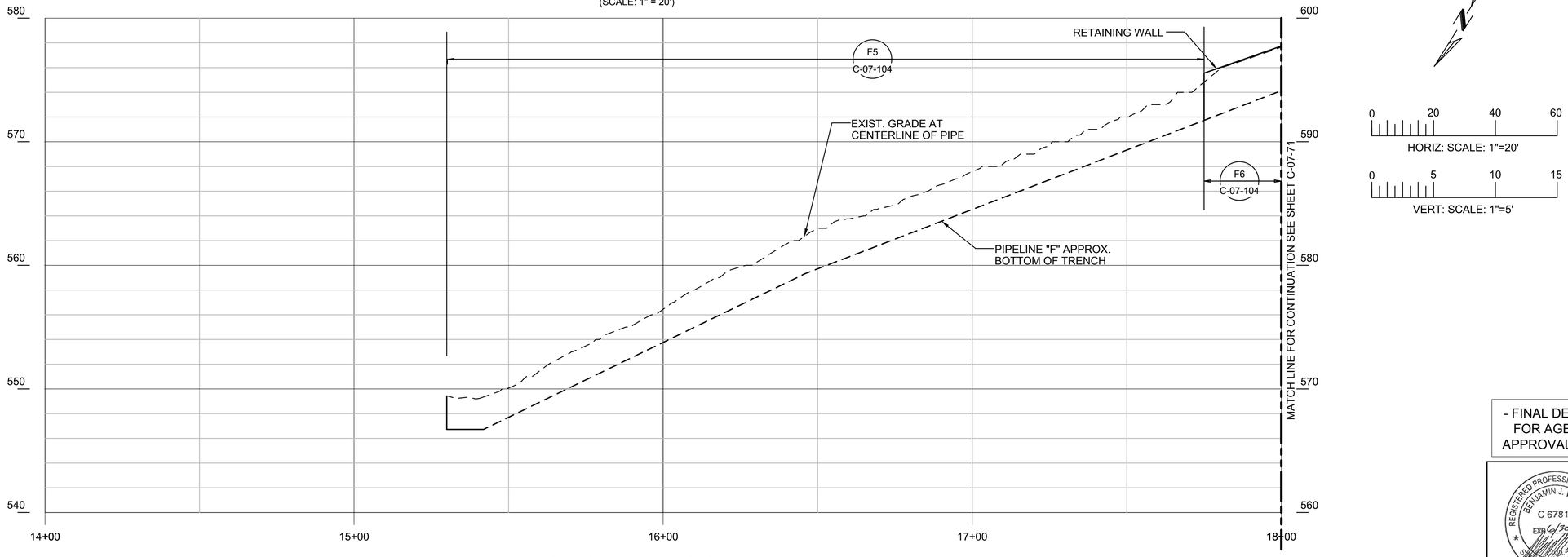

PIPELINE "F" - PROFILE

(SCALE: 1" = 20' H; 1" = 5' V)

- FINAL DESIGN - FOR AGENCY APPROVAL ONLY

REGISTERED PROFESSIONAL ENGINEER BENJAMIN J. WUERL C 67811 EXP 6/30/17 CIVIL STATE OF CALIFORNIA

ETIC ENGINEERING

ARCADIS

NO.	DATE	DESCRIPTION	GM/SPEC	DWN	CHKD	SUPV	APVD BY
2	11/18/15	FINAL DESIGN	AJW	WLM	BW	RAO	
1	9/8/14	PRE-FINAL (90%) DESIGN					
0	4/5/13	INTERMEDIATE (60%) DESIGN					

REVISIONS

APPROVED BY	
RAO	SO
	SUPV
	DSGN
	DWN
	CHKD
	OK
	DATE
	SCALES

TOPOCK GROUNDWATER REMEDIATION PROJECT

PLAN AND PROFILE
PIPELINE "F"
STA 15+30 TO STA 18+00

GAS TRANSMISSION & DISTRIBUTION
PACIFIC GAS AND ELECTRIC COMPANY
SAN FRANCISCO, CALIFORNIA

MICROFILM	
BILL OF MATL	
DWG LIST	
SUPSDS	
SUPSD BY	
SHEET NO.	of SHEETS
C-07-70	REV 2

N1808

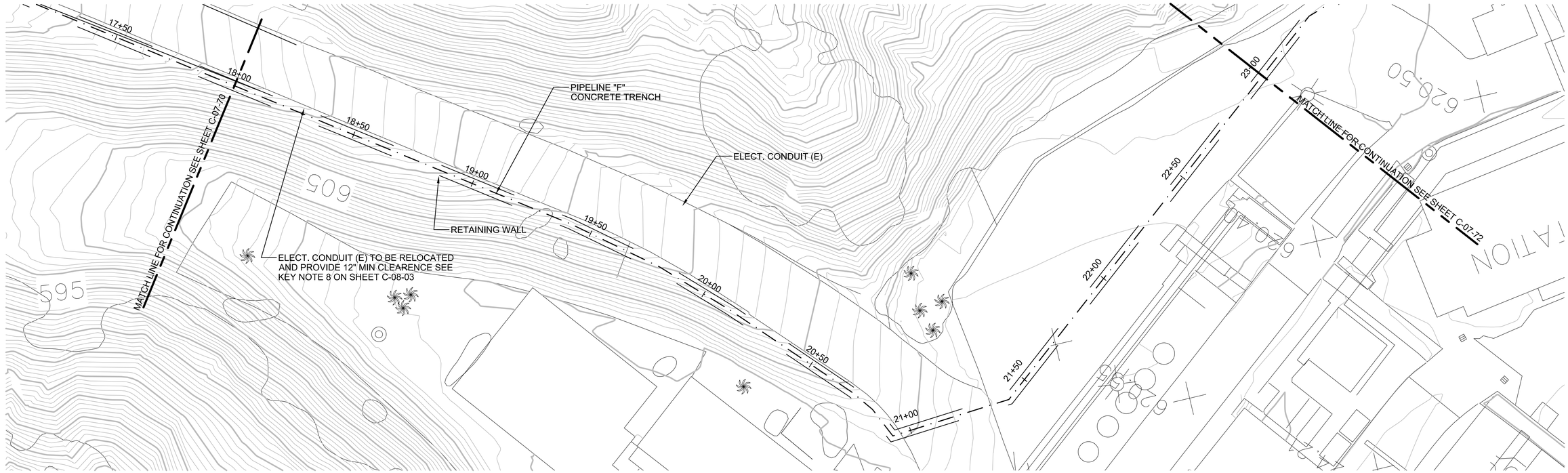

PIPELINE "F" - PLAN

(SCALE: 1" = 20')

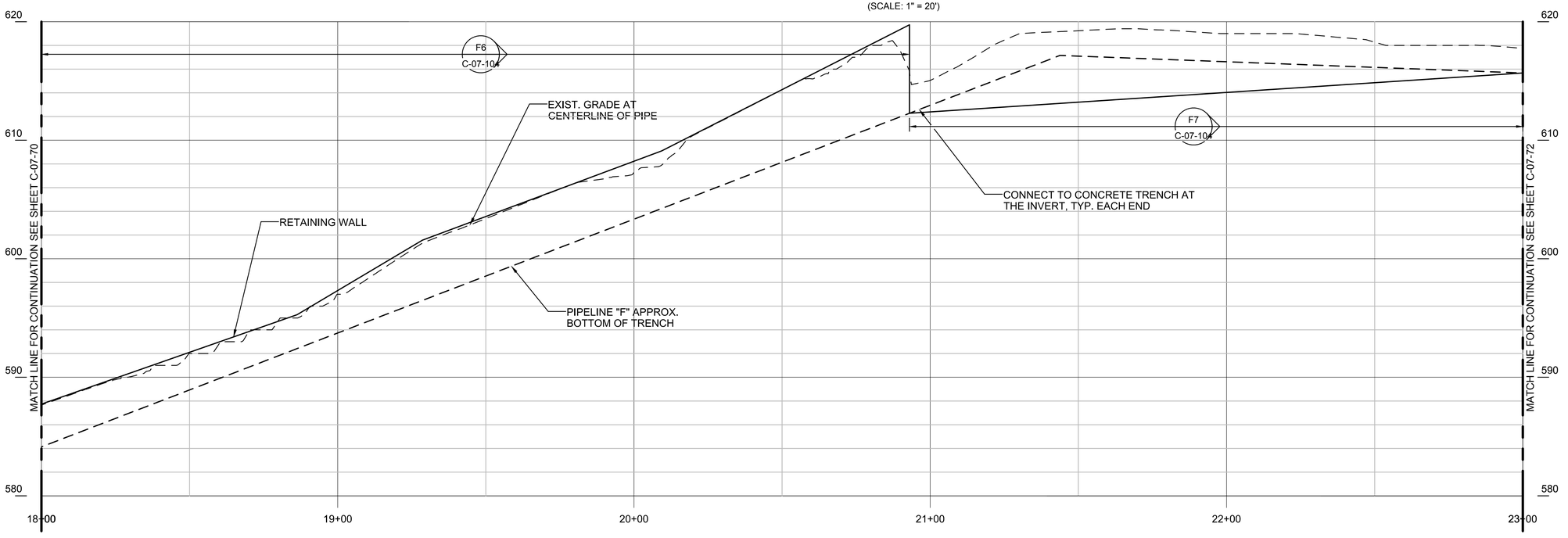

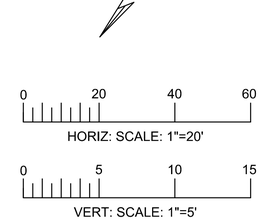

PIPELINE "F" - PROFILE

(SCALE: 1" = 20' H; 1" = 5' V)

- FINAL DESIGN - FOR AGENCY APPROVAL ONLY

REGISTERED PROFESSIONAL ENGINEER
BENJAMIN J. WUERL
C 67811
EXP 6/30/17
STATE OF CALIFORNIA

ETIC ENGINEERING

ARCADIS

NO.	DATE	DESCRIPTION	GM/SPEC	DWN	CHKD	SUPV	APVD BY
2	11/18/15	FINAL DESIGN		AJW	WLM	BW	RAO
1	9/8/14	PRE-FINAL (90%) DESIGN					
0	4/5/13	INTERMEDIATE (60%) DESIGN					

REVISIONS

APPROVED BY	
RAO	SO
	SUPV
	DSGN
	DWN
	CHKD
	OK
	DATE
	SCALES

TOPOCK GROUNDWATER REMEDIATION PROJECT

PLAN AND PROFILE
PIPELINE "F"
STA 18+00 TO STA 23+00
GAS TRANSMISSION & DISTRIBUTION
PACIFIC GAS AND ELECTRIC COMPANY
SAN FRANCISCO, CALIFORNIA

MICROFILM	
BILL OF MATL	
DWG LIST	
SUPSDS	
SUPSD BY	
SHEET NO. of SHEETS	
C-07-71	REV 2

N1808

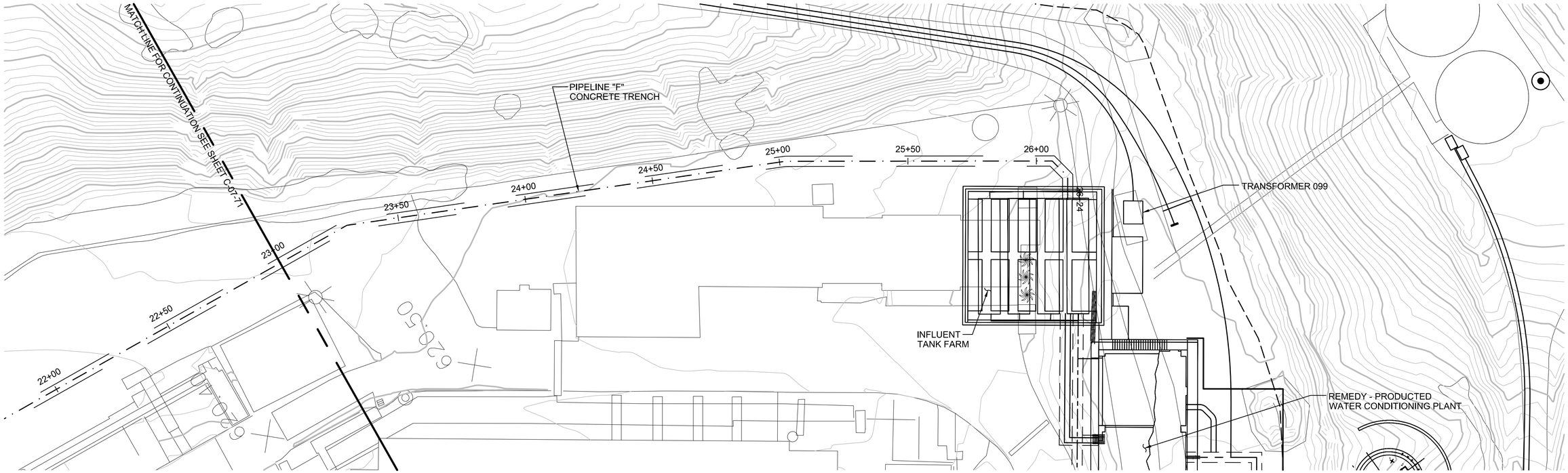

PIPELINE "F" - PLAN

(SCALE: 1" = 20')

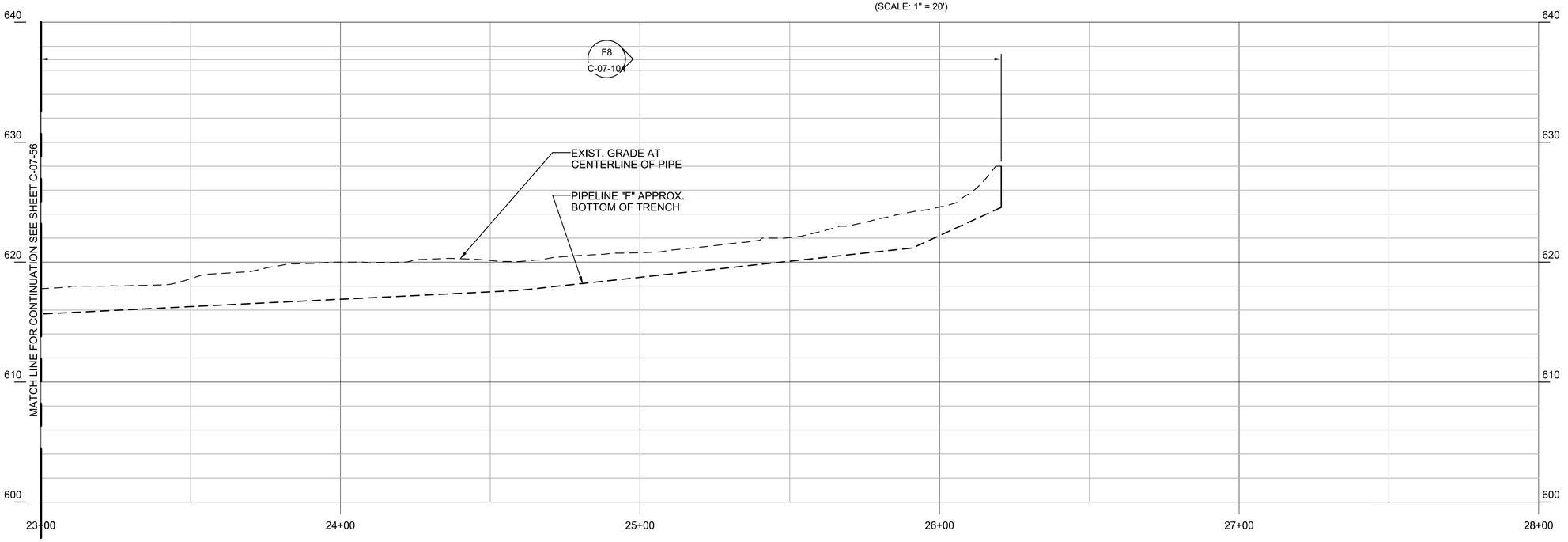

PIPELINE "F" - PROFILE

(SCALE: 1" = 20' H; 1" = 5' V)

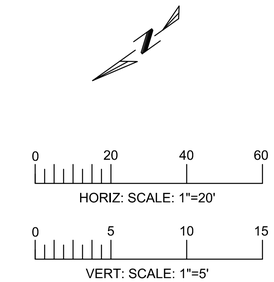

- FINAL DESIGN -
FOR AGENCY
APPROVAL ONLY

REGISTERED PROFESSIONAL ENGINEER
BENJAMIN J. WUSEL
C 67811
EXP 6/30/17
STATE OF CALIFORNIA

ETIC ENGINEERING

ARCADIS

NO.	DATE	DESCRIPTION	GM/SPEC	DWN	CHKD	SUPV	APVD BY
2	11/18/15	FINAL DESIGN	AJW	WLM	BW	RAO	
1	9/8/14	PRE-FINAL (90%) DESIGN					
0	4/5/13	INTERMEDIATE (60%) DESIGN					

REVISIONS

APPROVED BY	RAO
SO	
SUPV	
DSGN	
DWN	
CHKD	
OK	
DATE	
SCALES	

TOPOCK GROUNDWATER REMEDIATION PROJECT

PLAN AND PROFILE
PIPELINE "F"
STA 23+00 TO STA 26+25

GAS TRANSMISSION & DISTRIBUTION

PACIFIC GAS AND ELECTRIC COMPANY
SAN FRANCISCO, CALIFORNIA

MICROFILM	
BILL OF MATL	
DWG LIST	
SUPSDS	
SUPSD BY	
SHEET NO.	of SHEETS
C-07-72	REV 2

N1808

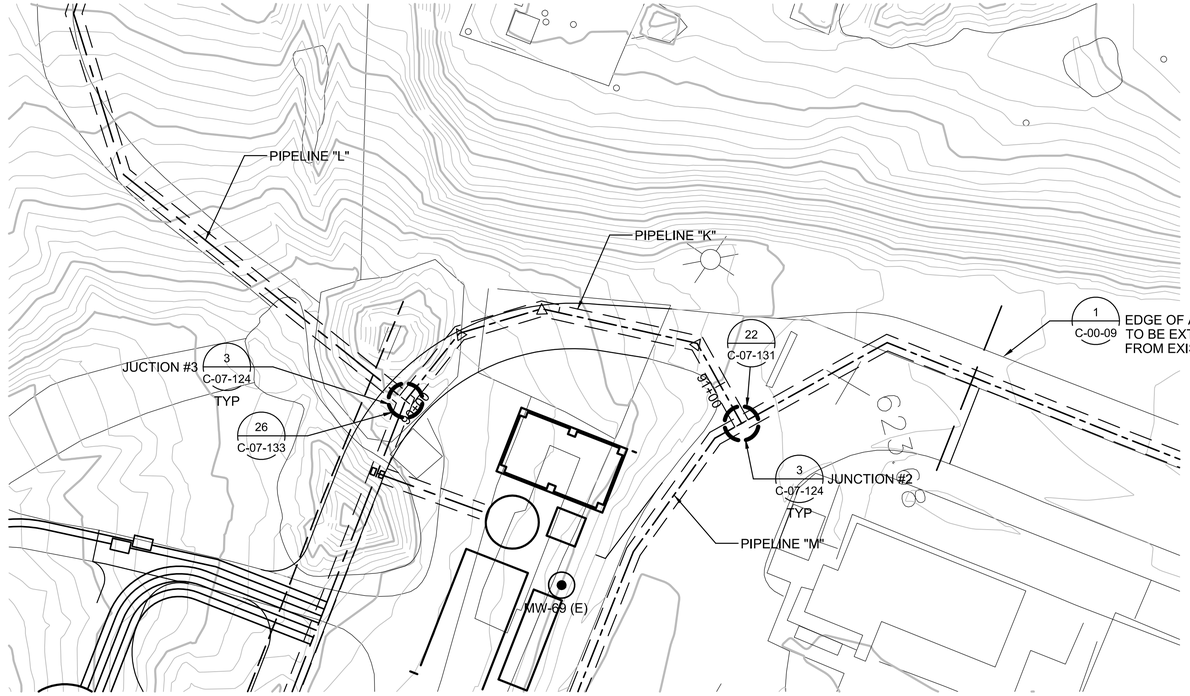

PIPELINE "K" - PLAN

(SCALE: 1" = 20')

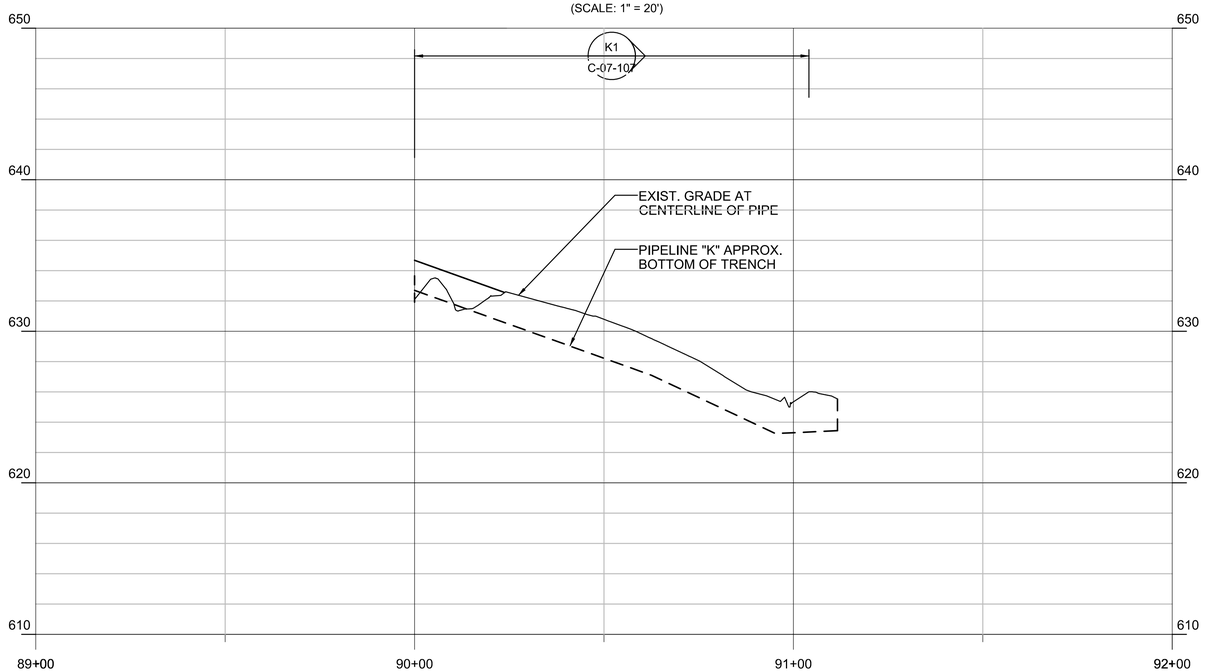

PIPELINE "K" - PROFILE

(SCALE: 1" = 20' H; 1" = 5' V)

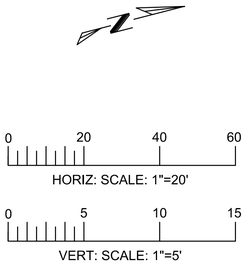

- FINAL DESIGN - FOR AGENCY APPROVAL ONLY

REGISTERED PROFESSIONAL ENGINEER
BENJAMIN J. WUEST
C 67811
EXP 6/30/17
STATE OF CALIFORNIA

ETIC ENGINEERING

ARCADIS

NO.	DATE	DESCRIPTION	GM/SPEC	DWN	CHKD	SUPV	APVD BY
2	11/18/15	FINAL DESIGN		AJW	WLM	BW	RAO
1	9/8/14	PRE-FINAL (90%) DESIGN					
0	4/5/13	INTERMEDIATE (60%) DESIGN					

REVISIONS

APPROVED BY	RAO
SO	
SUPV	
DSGN	
DWN	
CHKD	
OK	
DATE	
SCALES	

TOPOCK GROUNDWATER REMEDIATION PROJECT

PLAN AND PROFILE PIPELINE "K" STA 90+00 TO STA 91+11

GAS TRANSMISSION & DISTRIBUTION

PACIFIC GAS AND ELECTRIC COMPANY
SAN FRANCISCO, CALIFORNIA

MICROFILM	
BILL OF MATL	
DWG LIST	
SUPSDS	
SUPSD BY	
SHEET NO.	of SHEETS
C-07-73	REV 2

N1808

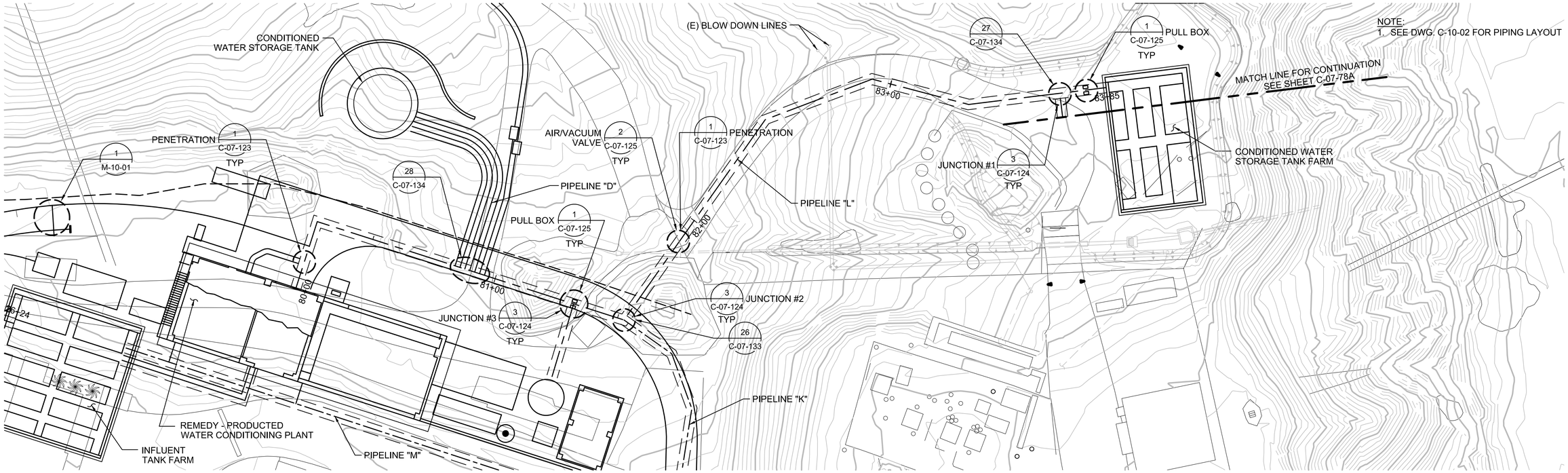

PIPELINE "L" - PLAN

(SCALE: 1" = 20')

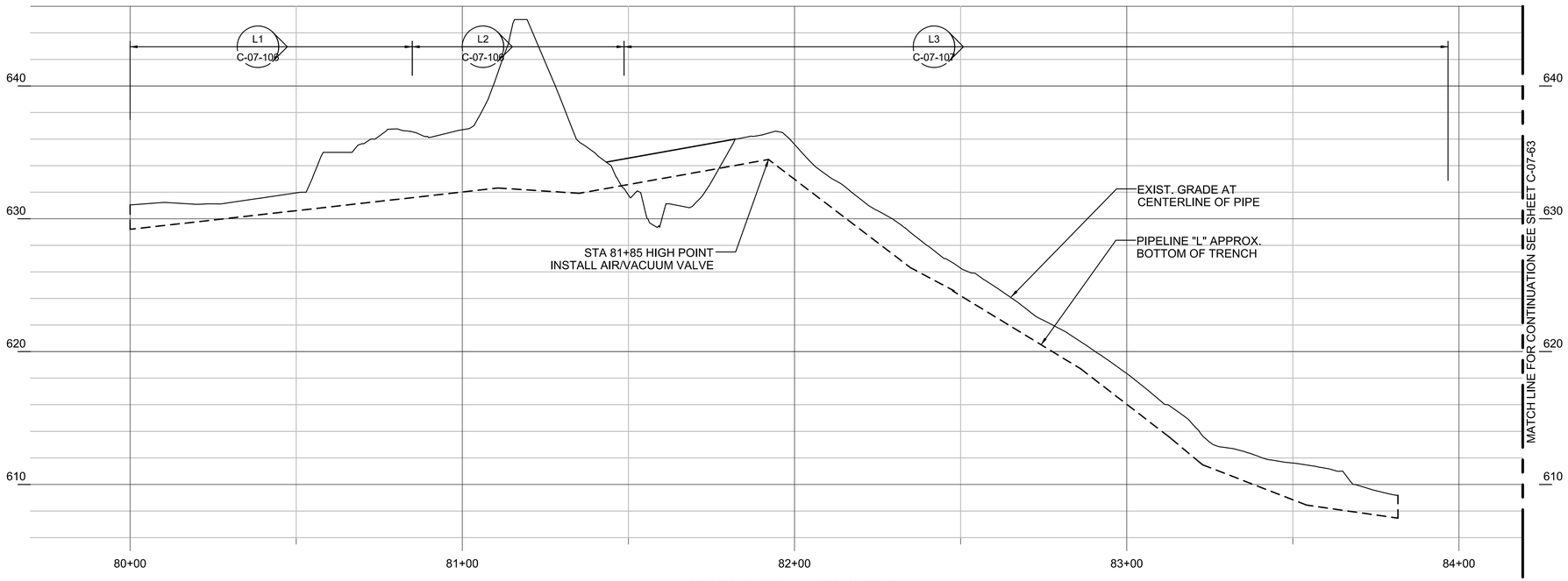

PIPELINE "L" - PROFILE

(SCALE: 1" = 20' H; 1" = 5' V)

0 20 40 60
HORIZ: SCALE: 1"=20'

0 5 10 15
VERT: SCALE: 1"=5'

- FINAL DESIGN - FOR AGENCY APPROVAL ONLY

REGISTERED PROFESSIONAL ENGINEER BENJAMIN J. WUSEL C 67811 EXP 6/30/17 STATE OF CALIFORNIA

ETIC ENGINEERING

ARCADIS

NO.	DATE	DESCRIPTION	GM/SPEC	DWN	CHKD	SUPV	APVD BY
2	11/18/15	FINAL DESIGN		AJW	WLM	BW	RAO
1	9/8/14	PRE-FINAL (90%) DESIGN					
0	4/5/13	INTERMEDIATE (60%) DESIGN					

REVISIONS

APPROVED BY	
RAO	SO
	SUPV
	DSGN
	DWN
	CHKD
	OK
	DATE
	SCALES

TOPOCK GROUNDWATER REMEDIATION PROJECT

PLAN AND PROFILE
PIPELINE "L"
STA 80+00 TO STA 83+90
GAS TRANSMISSION & DISTRIBUTION
PACIFIC GAS AND ELECTRIC COMPANY
SAN FRANCISCO, CALIFORNIA

MICROFILM	
BILL OF MATL	
DWG LIST	
SUPSDS	
SUPSD BY	
SHEET NO.	of SHEETS
C-07-74	REV 2

N1808

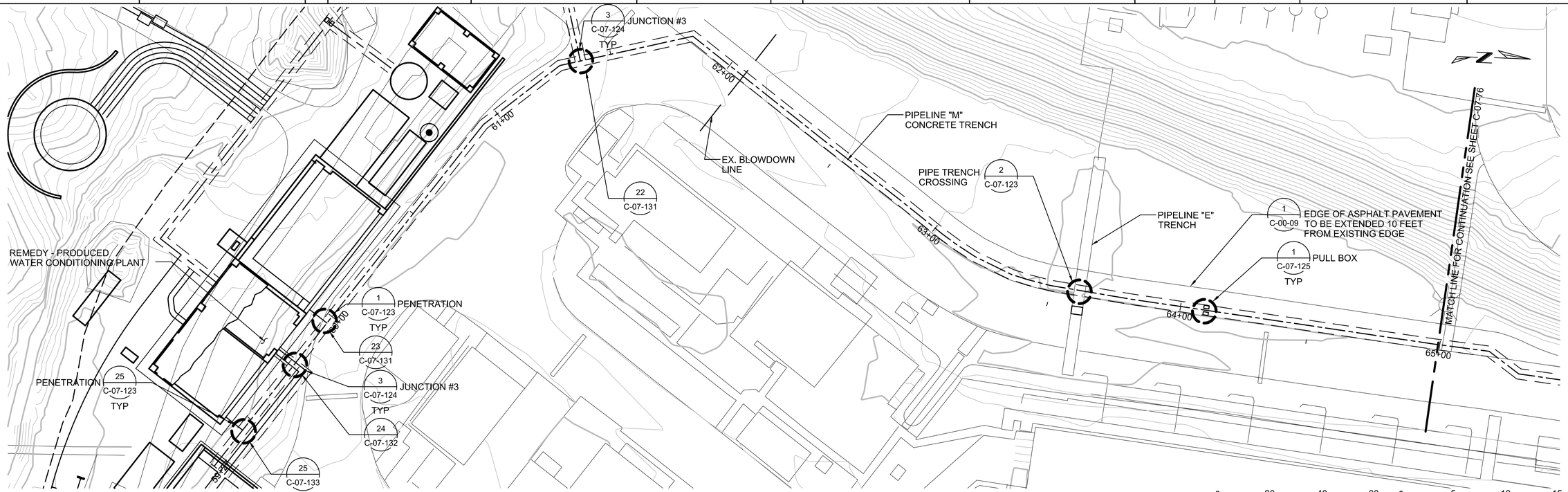

PIPELINE "M" - PLAN

(SCALE: 1" = 20')

HORIZ: SCALE: 1"=20'

VERT: SCALE: 1"=5'

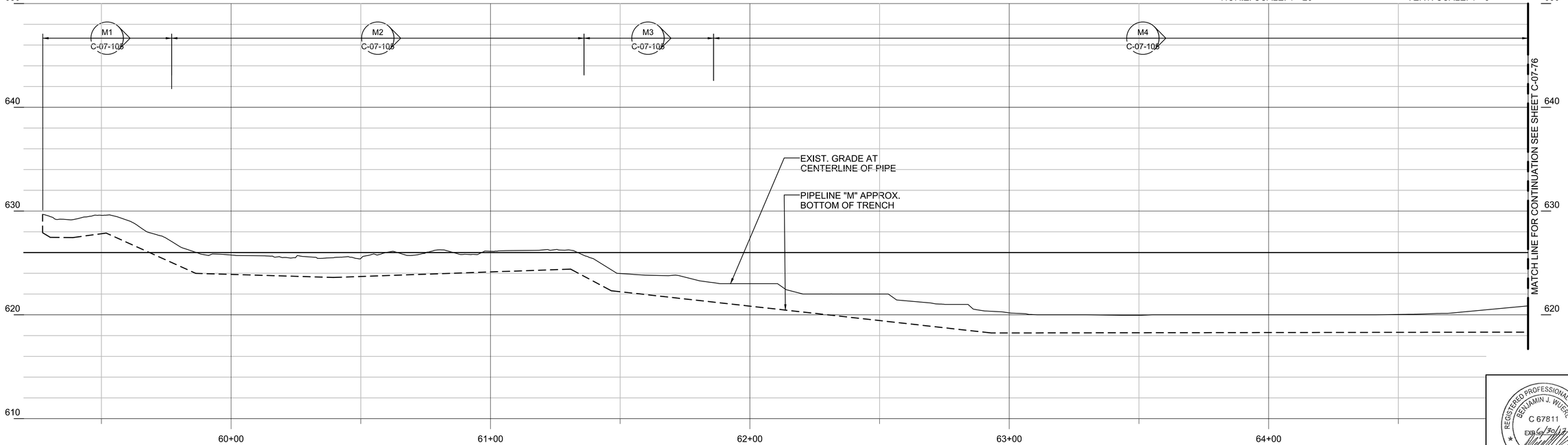

PIPELINE "M" - PROFILE

(SCALE: 1" = 20' H; 1" = 5' V)

- FINAL DESIGN -
FOR AGENCY APPROVAL ONLY

REGISTERED PROFESSIONAL ENGINEER
BENJAMIN J. WUERL
C 67811
EXP 6/30/17
STATE OF CALIFORNIA

ETIC ENGINEERING

ARCADIS

NO.	DATE	DESCRIPTION	GM/SPEC	DWN	CHKD	SUPV	APVD BY
2	11/18/15	FINAL DESIGN	AJW	WLM	BW	RAO	
1	9/8/14	PRE-FINAL (90%) DESIGN					
0	4/5/13	INTERMEDIATE (60%) DESIGN					

REVISIONS

APPROVED BY	SO
RAO	SUPV
	DSGN
	DWN
	CHKD
	OK
	DATE
	SCALES

TOPOCK GROUNDWATER REMEDIATION PROJECT

PLAN AND PROFILE PIPELINE "M" STA 60+00 TO STA 65+00

GAS TRANSMISSION & DISTRIBUTION

PACIFIC GAS AND ELECTRIC COMPANY
SAN FRANCISCO, CALIFORNIA

MICROFILM	
BILL OF MATL	
DWG LIST	
SUPSDS	
SUPSD BY	
SHEET NO. of SHEETS	
C-07-75	REV 2

N1808

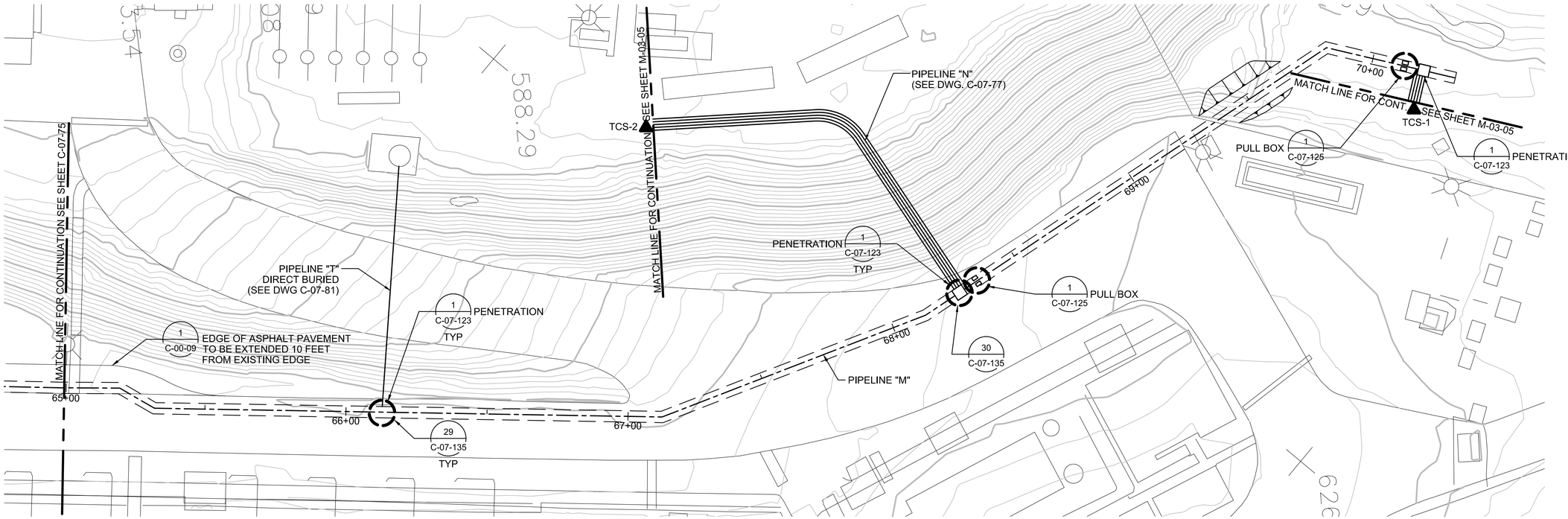

PIPELINE "M" - PLAN

(SCALE: 1" = 20')

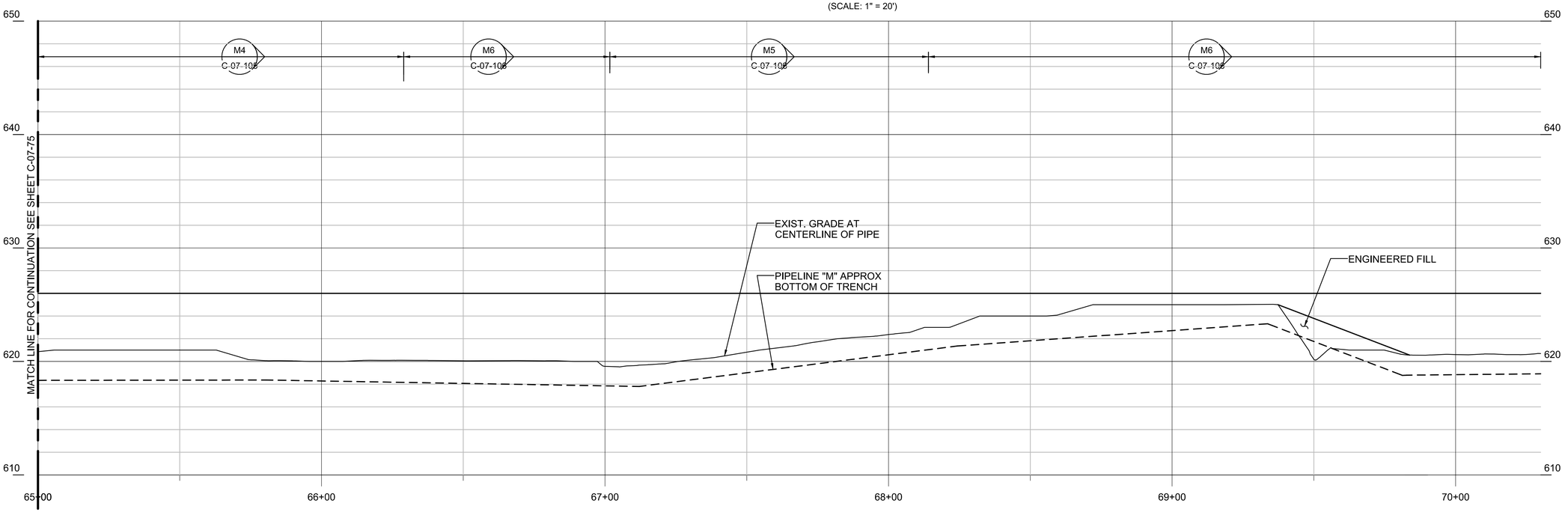

PIPELINE "M" - PROFILE

(SCALE: 1" = 20' H; 1" = 5' V)

0 20 40 60
HORIZ: SCALE: 1"=20'

0 5 10 15
VERT: SCALE: 1"=5'

- FINAL DESIGN -
FOR AGENCY
APPROVAL ONLY

REGISTERED PROFESSIONAL ENGINEER
BENJAMIN J. WUEST
C 67811
EXP 6/30/17
STATE OF CALIFORNIA

ETIC ENGINEERING

ARCADIS

NO.	DATE	DESCRIPTION	GM/SPEC	DWN	CHKD	SUPV	APVD BY
2	11/18/15	FINAL DESIGN		AJW	WLM	BW	RAO
1	9/8/14	PRE-FINAL (90%) DESIGN					
0	4/5/13	INTERMEDIATE (60%) DESIGN					

REVISIONS

APPROVED BY	RAO
SO	
SUPV	
DSGN	
DWN	
CHKD	
OK	
DATE	
SCALES	

TOPOCK GROUNDWATER REMEDIATION PROJECT

PLAN AND PROFILE
PIPELINE "M"
STA 65+00 TO STA 70+30

GAS TRANSMISSION & DISTRIBUTION
PACIFIC GAS AND ELECTRIC COMPANY
SAN FRANCISCO, CALIFORNIA

MICROFILM	
BILL OF MATL	
DWG LIST	
SUPSDS	
SUPSD BY	
SHEET NO.	of SHEETS
C-07-76	REV 2

N1808

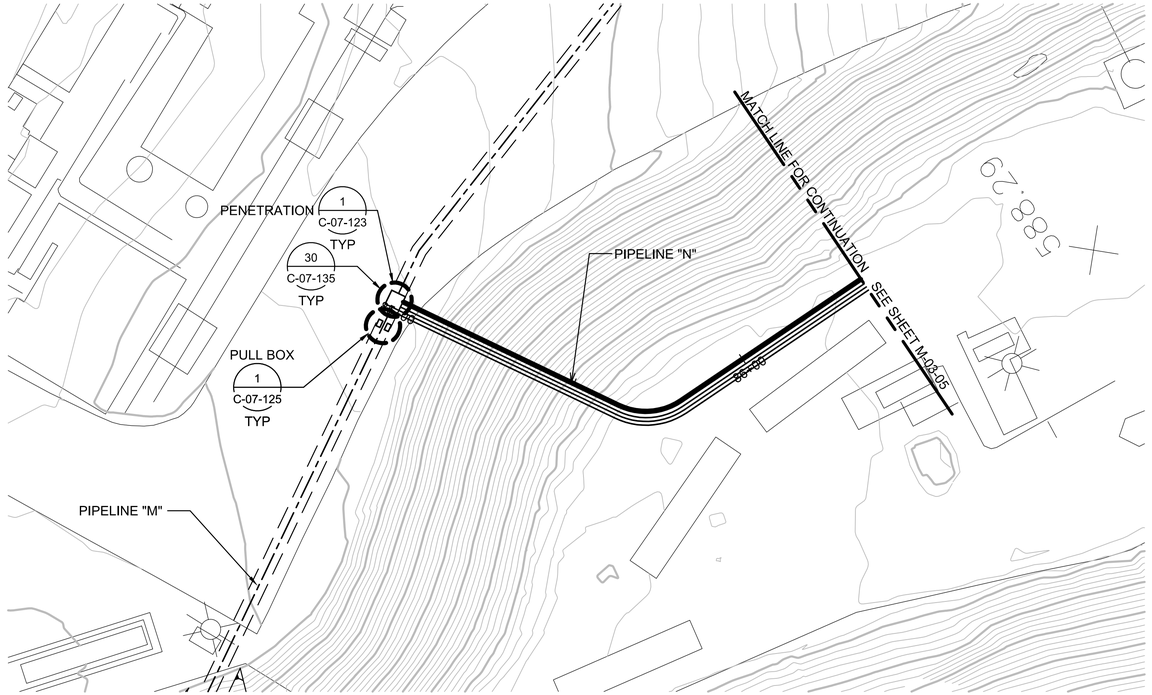

PIPELINE "N" - PLAN

(SCALE: 1" = 20')

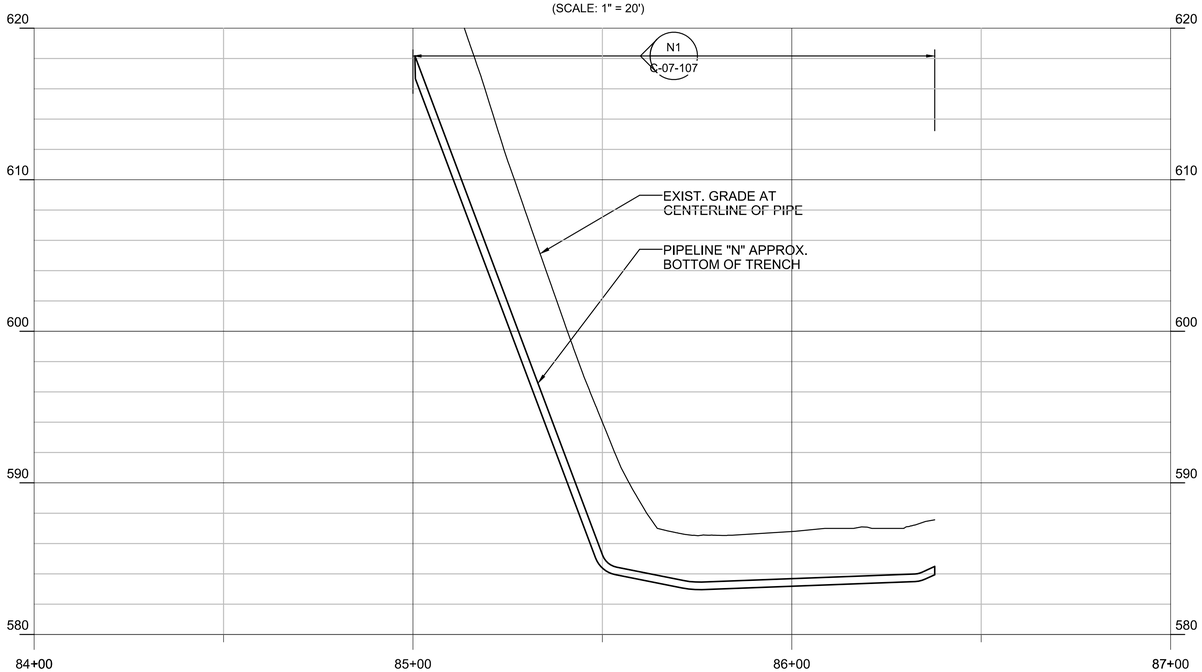

PIPELINE "N" - PROFILE

(SCALE: 1" = 20' H; 1" = 5' V)



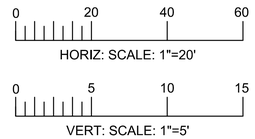

- FINAL DESIGN -
FOR AGENCY
APPROVAL ONLY

REGISTERED PROFESSIONAL ENGINEER
BENJAMIN J. WUSEL
C 67811
EXP 6/30/17
CIVIL
STATE OF CALIFORNIA

ETIC ENGINEERING

ARCADIS

NO.	DATE	DESCRIPTION	GM/SPEC	DWN	CHKD	SUPV	APVD BY
2	11/18/15	FINAL DESIGN	AJW	WLM	BW	RAO	
1	9/8/14	PRE-FINAL (90%) DESIGN					
0	4/5/13	INTERMEDIATE (60%) DESIGN					

REVISIONS

APPROVED BY	
RAO	

SO	
SUPV	
DSGN	
DWN	
CHKD	
OK	
DATE	
SCALES	

TOPOCK GROUNDWATER REMEDIATION PROJECT

PLAN AND PROFILE
PIPELINE "N"
STA 85+00 TO STA 86+38
GAS TRANSMISSION & DISTRIBUTION
PACIFIC GAS AND ELECTRIC COMPANY
SAN FRANCISCO, CALIFORNIA

MICROFILM	
BILL OF MATL	
DWG LIST	
SUPSDS	
SUPSD BY	
SHEET NO. of SHEETS	
C-07-77	REV 2

N1808

NOTES:

1. VAULT DETAILS SHOWN IN AREA 2 OF THE MECHANICAL AND STRUCTURAL DRAWINGS
2. SEE CONDUIT AND CABLE SCHEDULES AND SINGLE LINE DIAGRAMS ON SHEETS E-00-12 THRU E-00-20.
3. CLEANOUT LOCATIONS PROVIDE CLEANOUT PIPING FOR ALL INJECTION, EXTRACTION, BACKWASH, AND REMEDY-PRODUCED WATER LINES AT INDICATED LOCATIONS (SEE DETAIL C-00-08).

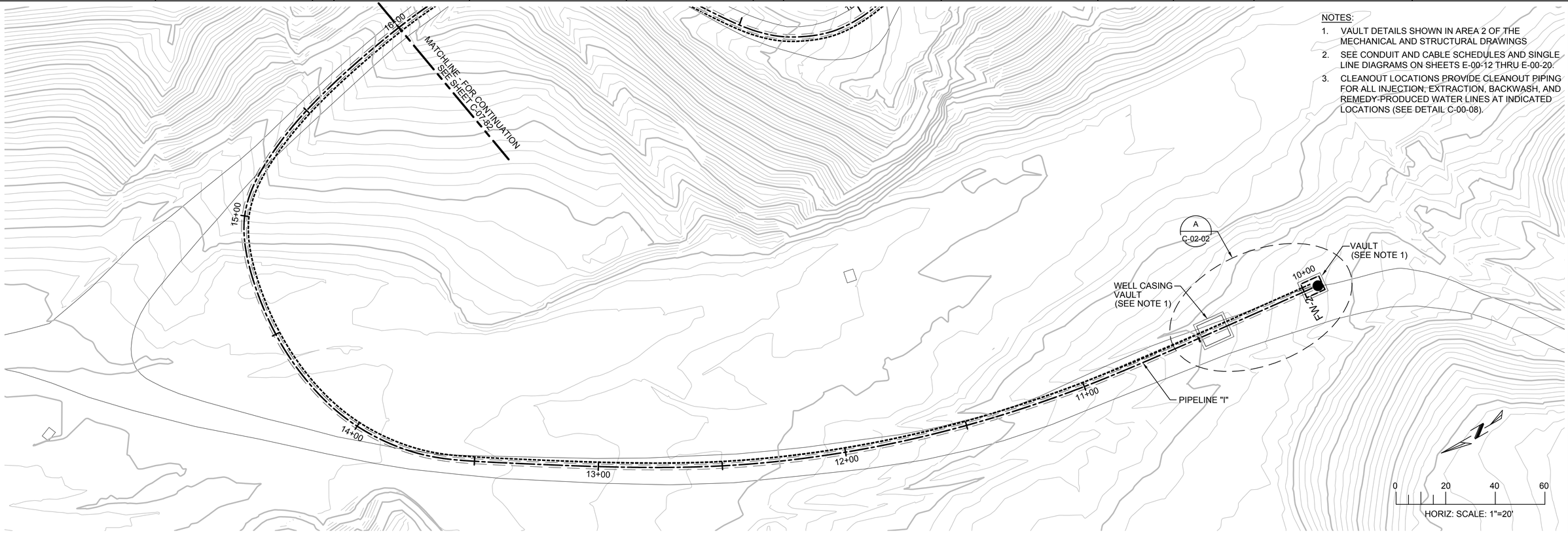

PIPELINE "I" - PLAN

(SCALE: 1" = 20')

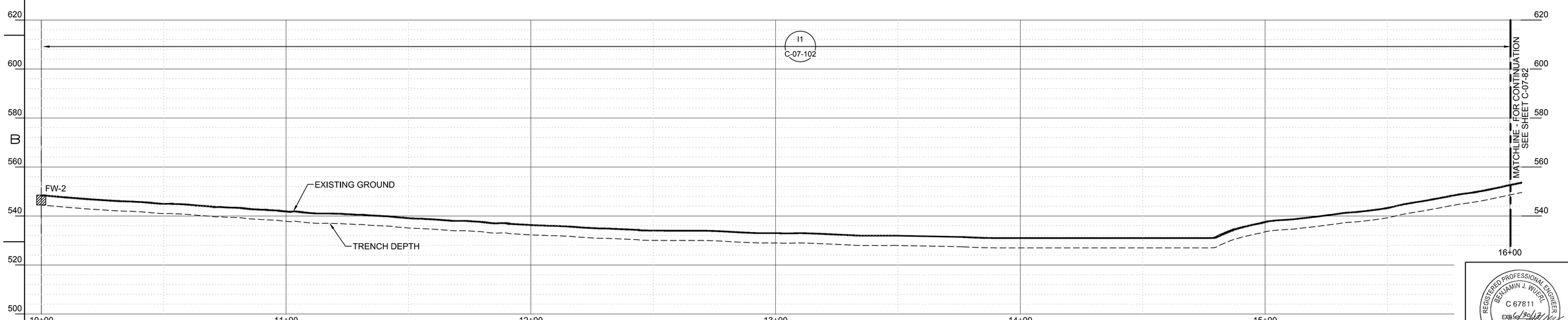

PIPELINE "I" - PROFILE

(SCALE: 1" = 20' H; 1" = 10' V)

REGISTERED PROFESSIONAL ENGINEER
BENJAMIN J. WUEST
C 67811
EXP 6/30/17
STATE OF CALIFORNIA

- FINAL DESIGN -
FOR AGENCY APPROVAL ONLY

ETIC ENGINEERING

ARCADIS

NO.	DATE	DESCRIPTION	GM/SPEC	DWN	CHKD	SUPV	APVD BY
1	11/18/15	FINAL DESIGN		AJW	WLM	BW	RAO
0	8/5/15	90% RTC RESOLUTION		AJW	KLD	WLM	BJW

REVISIONS

APPROVED BY	
RAO	SO
	SUPV
	DSGN
	DWN
	CHKD
	OK
	DATE
	SCALES

TOPOCK GROUNDWATER REMEDIATION PROJECT

BATCAVE WASH-
PLAN AND PROFILE - PIPELINE "I"
STA 10+00 TO STA 16+00

GAS TRANSMISSION & DISTRIBUTION
PACIFIC GAS AND ELECTRIC COMPANY
SAN FRANCISCO, CALIFORNIA

MICROFILM	
BILL OF MATL	
DWG LIST	
SUPSDS	
SUPSD BY	
SHEET NO.	of SHEETS
C-07-78	REV 1

N1608

11/02/2015, 16:45, G:\Graphics\AR\TOPOCK-011\Submittal_100%\DWGs\C-Civil\C-07-78.dwg, Tab: C-07-78

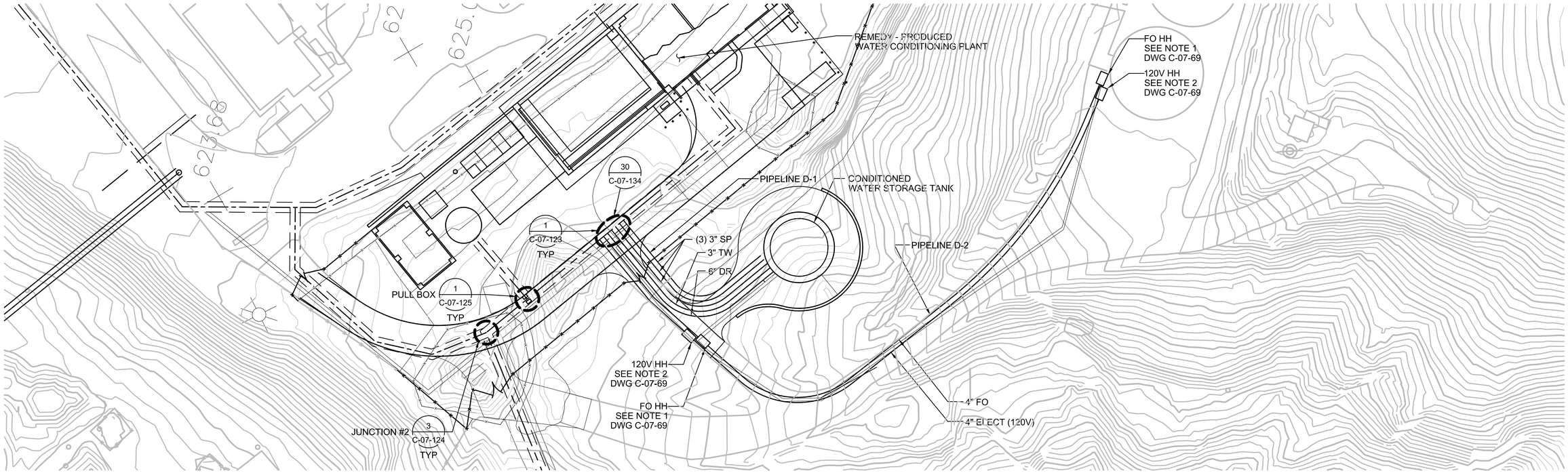

PIPELINE "D" - PLAN

(SCALE: 1" = 20')

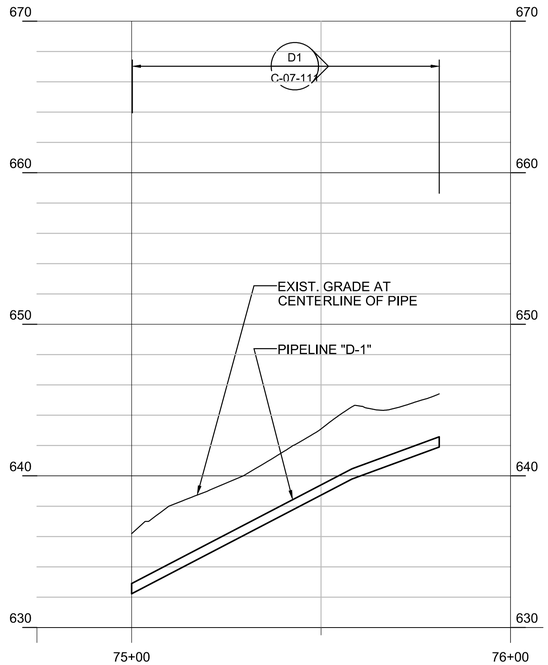

PIPELINE "D-1" - PROFILE

(SCALE: 1" = 20' H; 1" = 5' V)

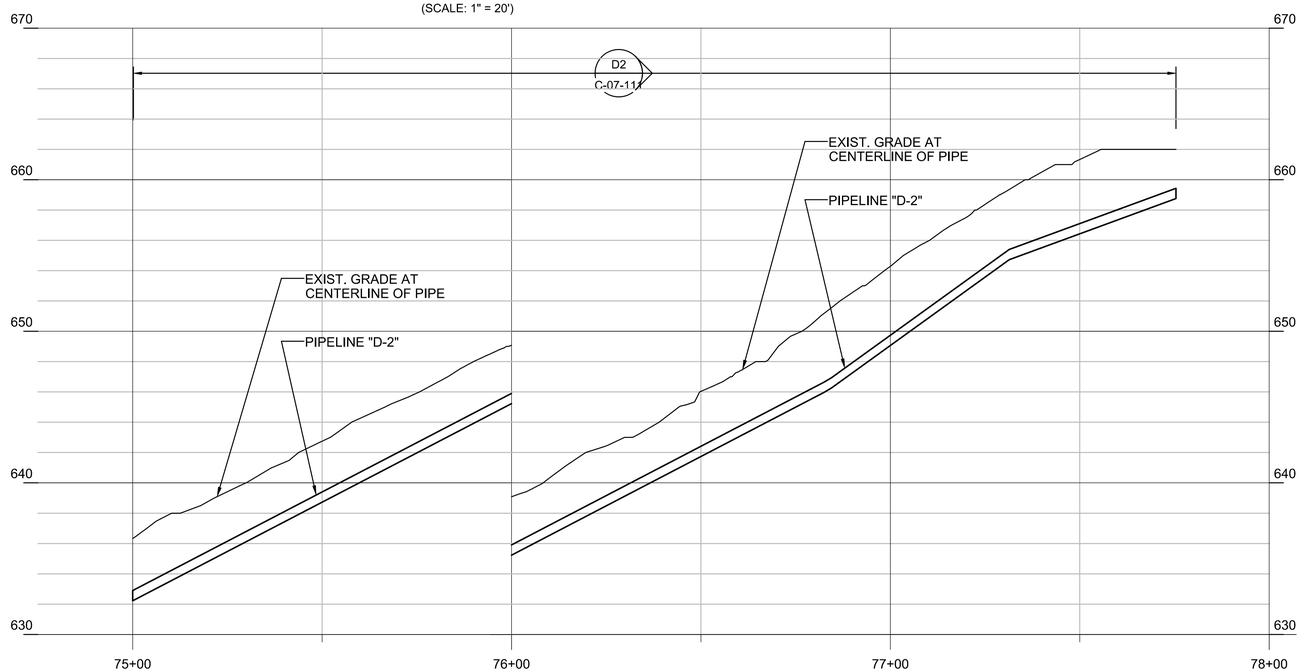

PIPELINE "D-2" - PROFILE

(SCALE: 1" = 20' H; 1" = 5' V)

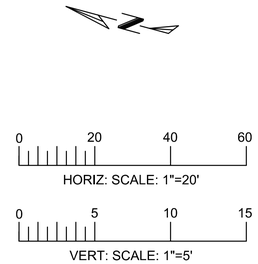

- FINAL DESIGN - FOR AGENCY APPROVAL ONLY

REGISTERED PROFESSIONAL ENGINEER BENJAMIN J. WUEST C 67811 EXP 6/30/17 STATE OF CALIFORNIA

ETIC ENGINEERING

ARCADIS

NO.	DATE	DESCRIPTION	GM/SPEC	DWN	CHKD	SUPV	APVD BY
2	11/18/15	FINAL DESIGN	AJW	WLM	BW	RAO	
1	9/8/14	PRE-FINAL (90%) DESIGN					
0	4/5/13	INTERMEDIATE (60%) DESIGN					

REVISIONS

APPROVED BY	
RAO	SO
	SUPV
	DSGN
	DWN
	CHKD
	OK
	DATE
	SCALES

TOPOCK GROUNDWATER REMEDIATION PROJECT

PLAN AND PROFILE
PIPELINE "D"
STA 75+00 TO STA 77+75

GAS TRANSMISSION & DISTRIBUTION
PACIFIC GAS AND ELECTRIC COMPANY
SAN FRANCISCO, CALIFORNIA

MICROFILM	
BILL OF MATL	
DWG LIST	
SUPSDS	
SUPSD BY	
SHEET NO.	of SHEETS
C-07-79	REV 2

N1808

NOTES:
1. SEE DWG. C-10-02 FOR PIPING LAYOUT.

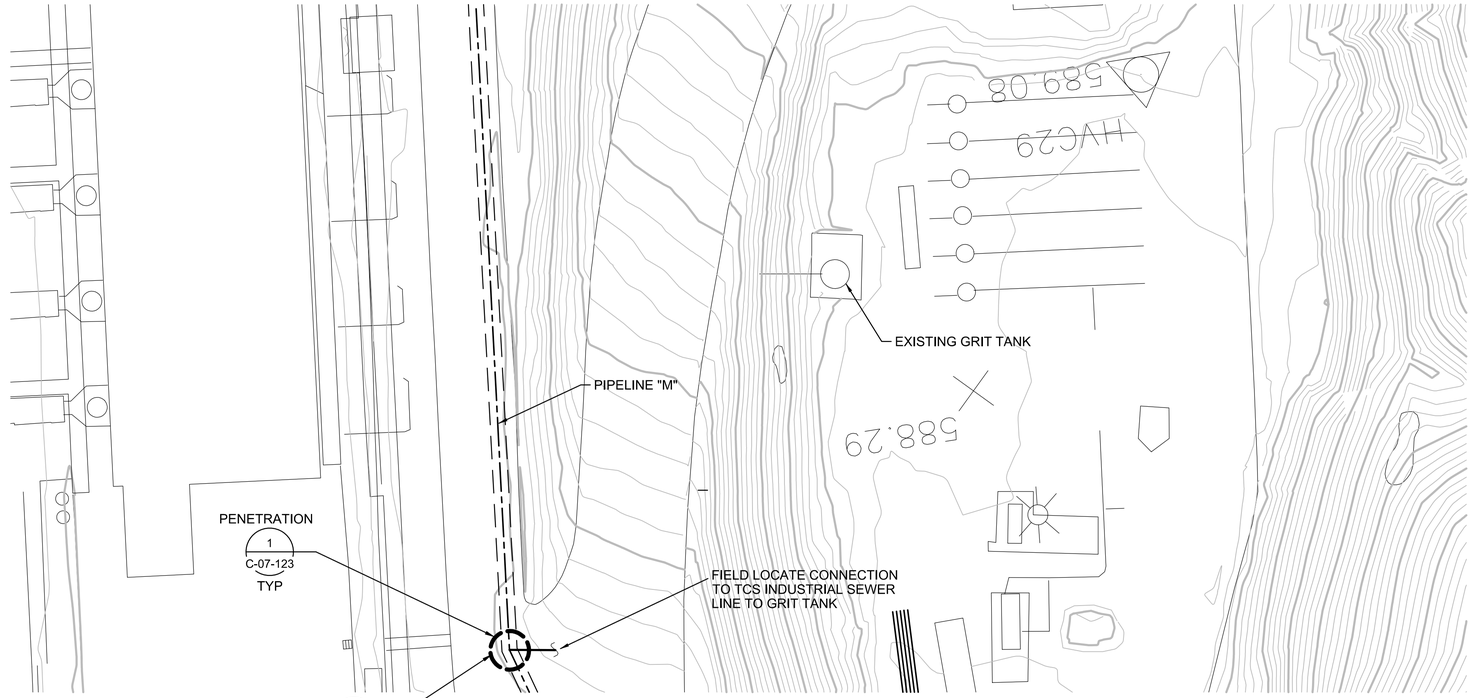

PIPELINE "T" - PLAN

(SCALE: 1" = 20')

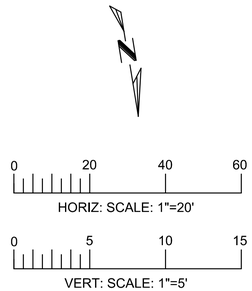

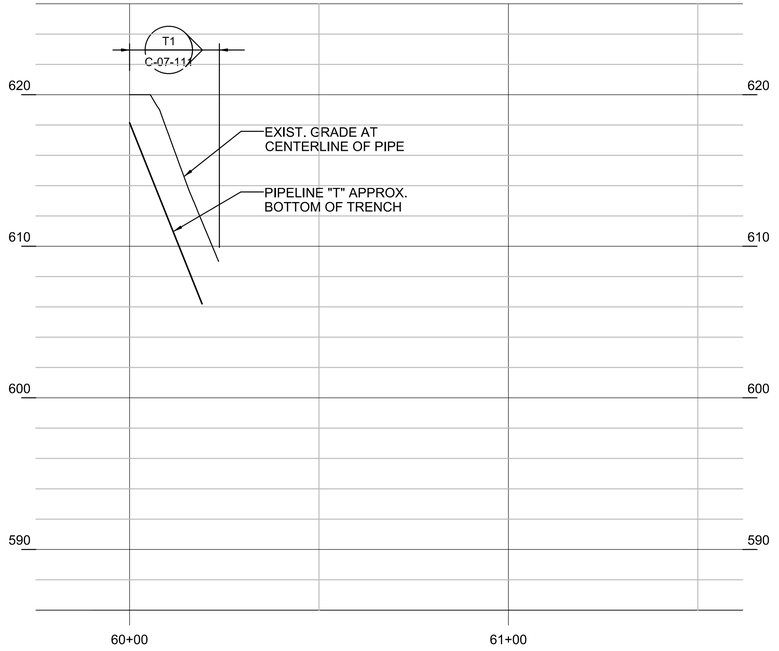

PIPELINE "T" - PROFILE

(SCALE: 1" = 20' H; 1" = 5' V)

- FINAL DESIGN -
FOR AGENCY
APPROVAL ONLY

REGISTERED PROFESSIONAL ENGINEER
BENJAMIN J. WUEST
C 67811
EXP 6/30/17
CIVIL
STATE OF CALIFORNIA

ETIC ENGINEERING

ARCADIS

NO.	DATE	DESCRIPTION	GM/SPEC	DWN	CHKD	SUPV	APVD BY
2	11/18/15	FINAL DESIGN	AJW	WLM	BW	RAO	
1	9/8/14	PRE-FINAL (90%) DESIGN					
0	4/5/13	INTERMEDIATE (60%) DESIGN					

REVISIONS

APPROVED BY	SO
RAO	SUPV
	DSGN
	DWN
	CHKD
	OK
	DATE
	SCALES

TOPOCK GROUNDWATER REMEDIATION PROJECT

PLAN AND PROFILE
PIPELINE "T"
STA 60+00 TO STA 60+85

GAS TRANSMISSION & DISTRIBUTION
PACIFIC GAS AND ELECTRIC COMPANY
SAN FRANCISCO, CALIFORNIA

MICROFILM	
BILL OF MATL	
DWG LIST	
SUPSDS	
SUPSD BY	
SHEET NO.	of SHEETS
C-07-81	REV 2

N1808

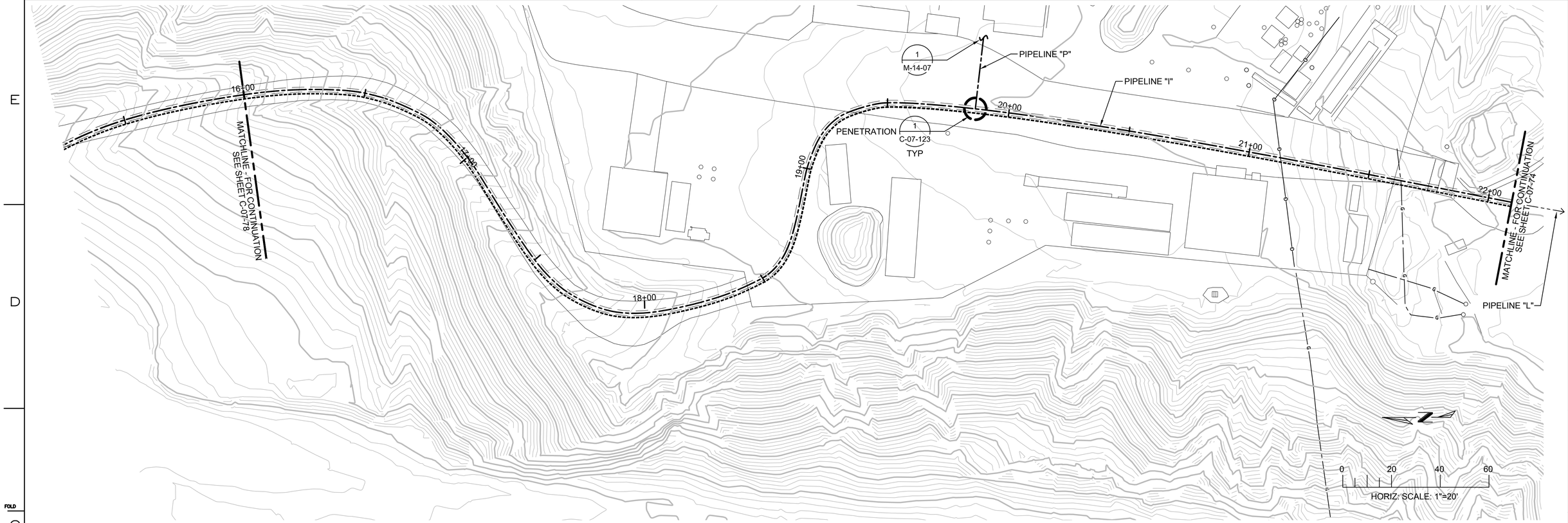

PIPELINE "I" - PLAN

(SCALE: 1" = 20')

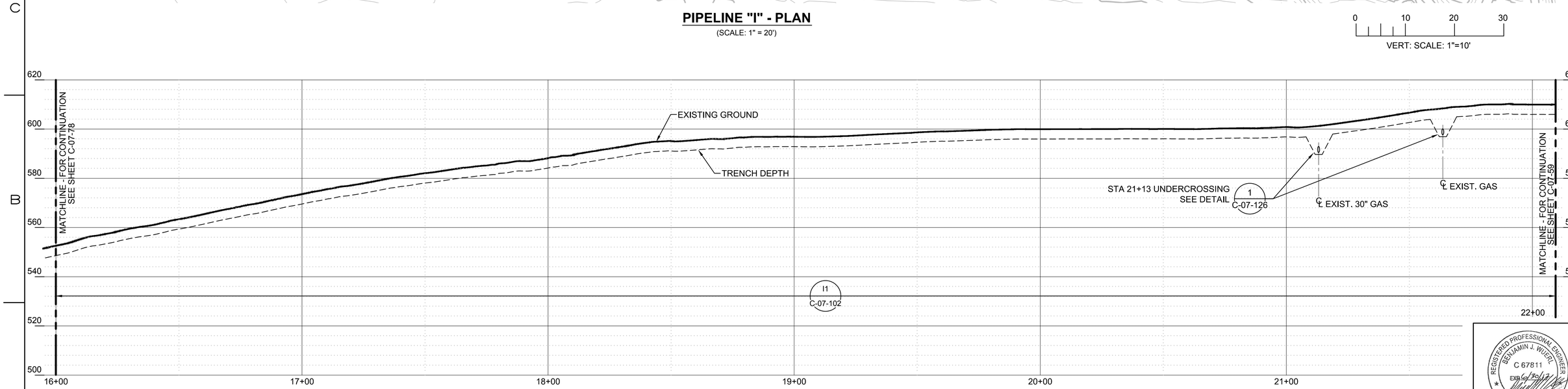

PIPELINE "I" - PROFILE

(SCALE: 1" = 20' H; 1" = 10' V)

- FINAL DESIGN - FOR AGENCY APPROVAL ONLY

REGISTERED PROFESSIONAL ENGINEER BENJAMIN J. WUERL C 67811 Exp 6/30/17 STATE OF CALIFORNIA

ETIC ENGINEERING

ARCADIS

NO.	DATE	DESCRIPTION	GM/SPEC	DWN	CHKD	SUPV	APVD BY
1	11/18/15	FINAL DESIGN		AJW	WLM	BW	RAO
0	8/5/15	90% RTC RESOLUTION		AJW	KLD	WLM	BJW

REVISIONS

APPROVED BY	
RAO	SO
	SUPV
	DSGN
	DWN
	CHKD
	OK
	DATE
	SCALES

TOPOCK GROUNDWATER REMEDIATION PROJECT

BATCAVE WASH- PLAN AND PROFILE - PIPELINE "I" STA 16+00 TO STA 22+09

GAS TRANSMISSION & DISTRIBUTION

PACIFIC GAS AND ELECTRIC COMPANY
SAN FRANCISCO, CALIFORNIA

MICROFILM	
BILL OF MATL	
DWG LIST	
SUPSDS	
SUPSD BY	
SHEET NO. of SHEETS	
C-07-82	REV 1

N1808

11/02/2015, 16:48, G:\Graphics\AR\TOPOCK-011Submittal_100%\DWG&C-Civil\C-07-82.dwg, Tab: C-07-82

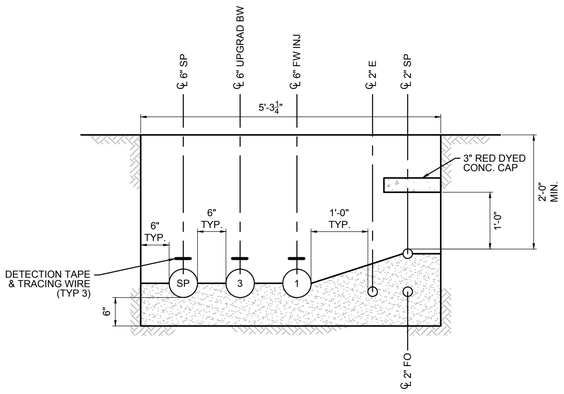

PIPELINE SECTION A1

A1 SECTION
3/4" = 1'-0"
C-07-20

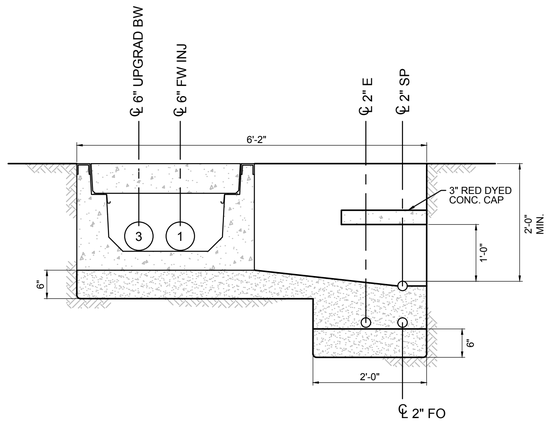

PIPELINE SECTION A2

A2 SECTION
3/4" = 1'-0"
C-07-20
C-07-21

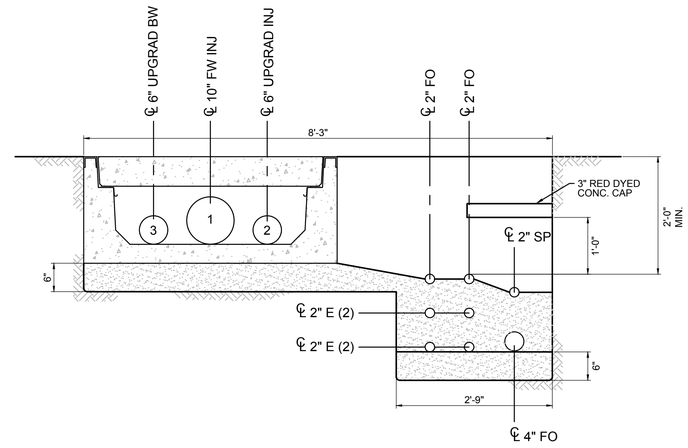

PIPELINE SECTION A3

A3 SECTION
3/4" = 1'-0"
C-07-21

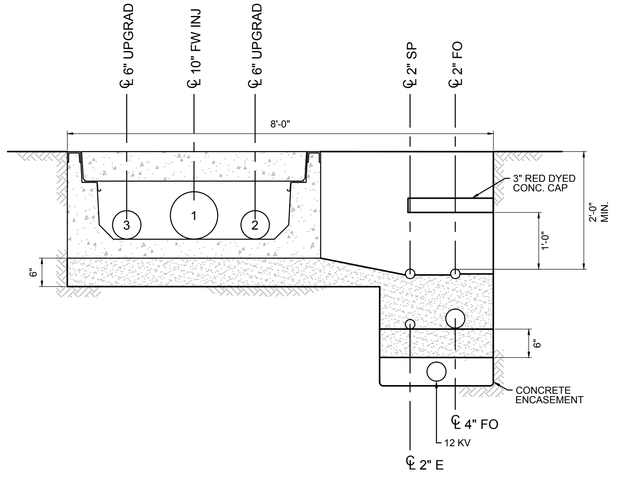

PIPELINE SECTION A4

A4 SECTION
3/4" = 1'-0"
C-07-21

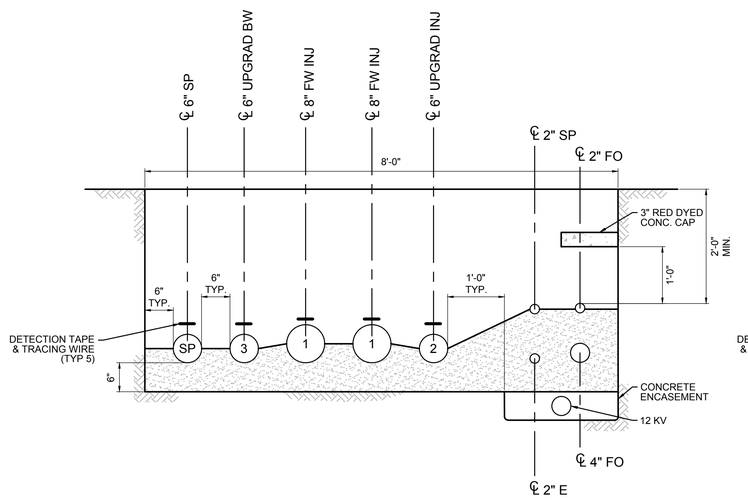

PIPELINE SECTION A5

A5 SECTION
3/4" = 1'-0"
C-07-21

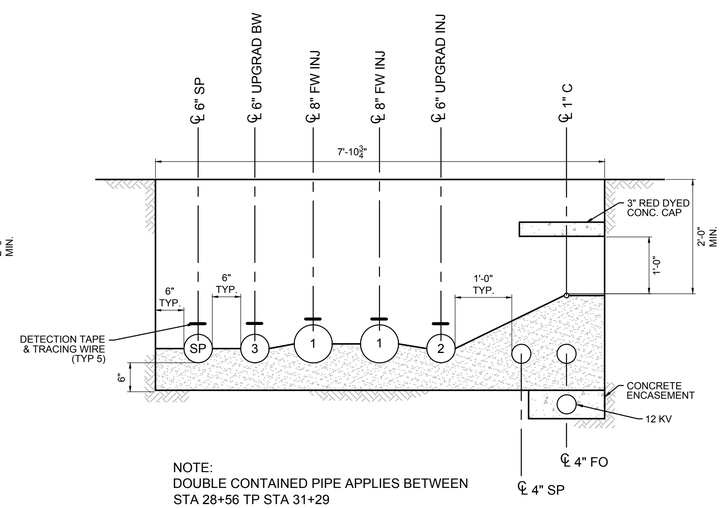

NOTE:
DOUBLE CONTAINED PIPE APPLIES BETWEEN STA 28+56 TP STA 31+29

PIPELINE SECTION A6

A6 SECTION (GRAVEL ROAD)
3/4" = 1'-0"
C-07-21
C-07-22

- FINAL DESIGN - FOR AGENCY APPROVAL ONLY

REGISTERED PROFESSIONAL ENGINEER
BENJAMIN J. WUISEL
C 67811
EXP 6/30/17
STATE OF CALIFORNIA

ETIC ENGINEERING

ARCADIS

N1808

NO.	DATE	DESCRIPTION	GM/SPEC	DWN	CHKD	SUPV	APVD BY
3	11/18/15	FINAL DESIGN	AJW	WLM	BW	RAO	
2	12/30/14	SUPPLEMENTAL PRE-FINAL (90%) DESIGN	MD	PT	VMB	VMB	
1	9/8/14	PRE-FINAL (90%) DESIGN	PC	PT	VMB	VMB	
0	4/5/13	INTERMEDIATE (60%) DESIGN	PC	PT	VMB	VMB	

REVISIONS

APPROVED BY	SO
RAO	SUPV
	DSGN
	DWN
	CHKD
	OK
	DATE
	SCALES

TOPOCK GROUNDWATER REMEDIATION PROJECT

TRENCH SECTIONS

GAS TRANSMISSION & DISTRIBUTION
PACIFIC GAS AND ELECTRIC COMPANY
SAN FRANCISCO, CALIFORNIA

MICROFILM	
BILL OF MATL	
DWG LIST	
SUPSDS	
SUPSD BY	
SHEET NO. of SHEETS	
C-07-100	REV 3

11/02/2015, 15:04, G:\Graphics\AR\TOPOCK-01\Submittal_100%\DWGs\C-Civil\C-07-100 to 106_PipeTrenchDetails.dwg, Tab: C-07-100

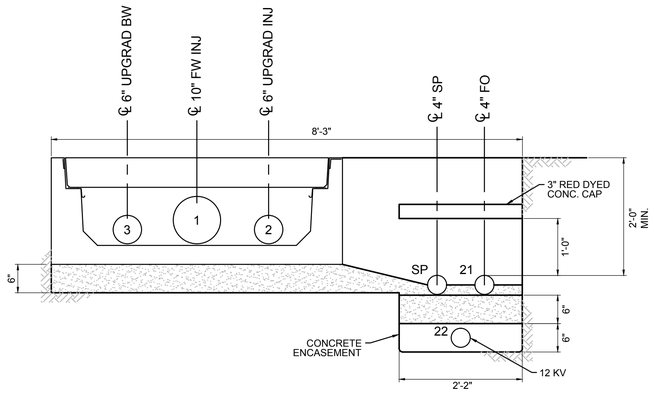

PIPELINE SECTION A7

A7 SECTION
3/4" = 1'-0"

C-07-22
C-07-23

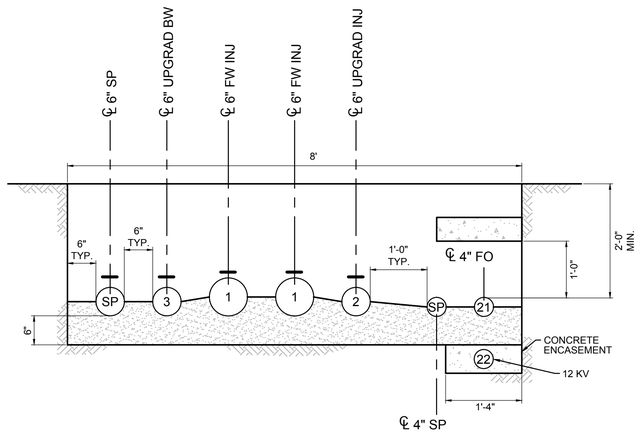

PIPELINE SECTION A11

A11 SECTION (GRAVEL ROAD)
3/4" = 1'-0"

C-07-24

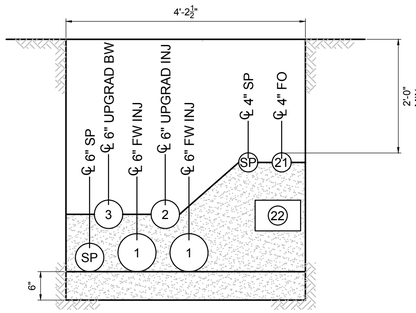

PIPELINE SECTION A12

A12 SECTION
3/4" = 1'-0"

C-07-22

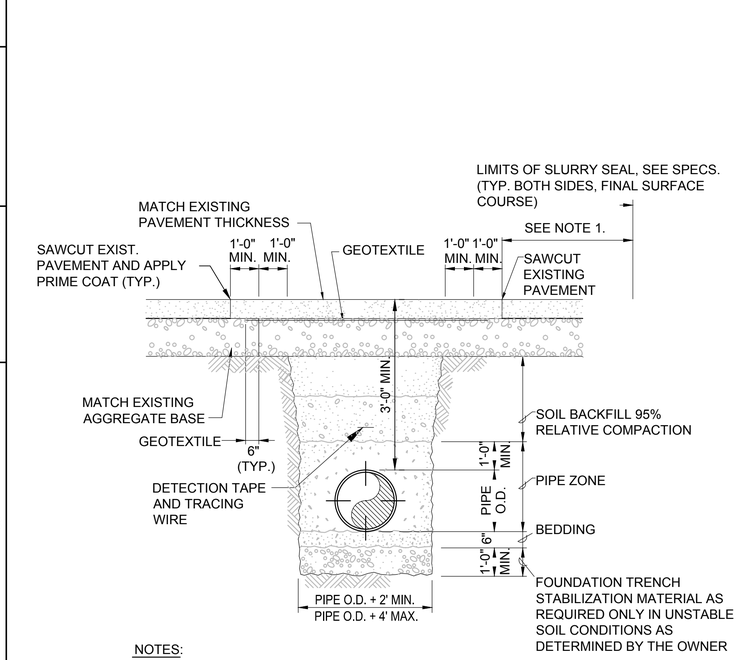

NOTES:

1. ABOVE MIN. APPLIES TO TRENCH TRANSVERSE TO STREET.

B4 SECTION (IN PAVEMENT)
3/4" = 1'-0"

C-07-30
C-07-31

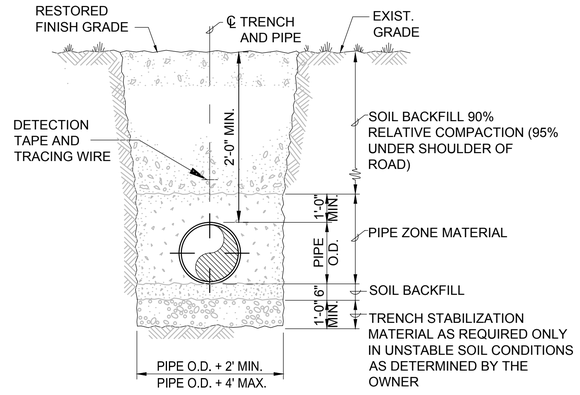

NOTES:

1. IN NON-ROAD AREAS, RESTORE TO MATCH ORIGINAL CONDITION. RESEEDING IS NOT A REQUIREMENT.

B4 SECTION (ROAD SHOULDER OR OPEN FIELD)
3/4" = 1'-0"

C-07-30
C-07-31
C-07-32
C-07-33
C-07-34
C-07-35
C-07-36
C-07-37

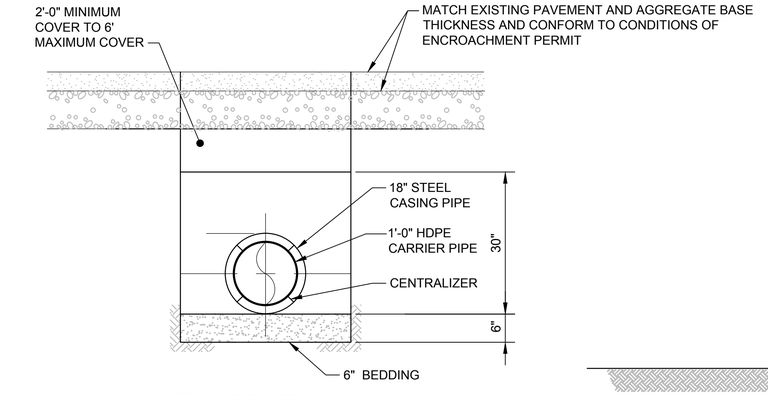

B6 SECTION
3/4" = 1'-0"

C-07-30

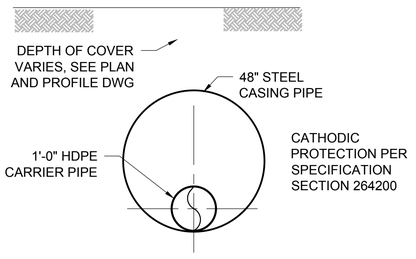

B5 SECTION
3/4" = 1'-0"

C-07-30

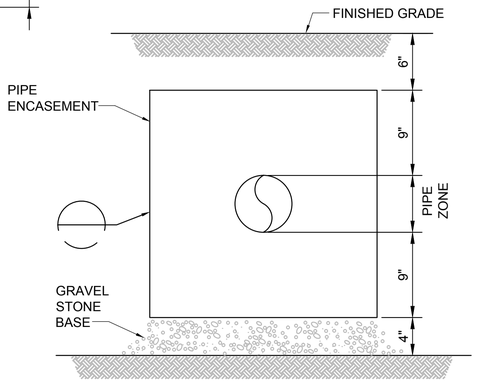

B7 SECTION
1.5" = 1'-0"

C-07-37

- FINAL DESIGN -
FOR AGENCY APPROVAL ONLY

ETIC ENGINEERING

ARCADIS

NO.	DATE	DESCRIPTION	GM/SPEC	DWN	CHKD	SUPV	APVD BY
4	11/18/15	FINAL DESIGN		AJW	WLM	BW	RAO
3	8/5/15	90% RTC RESOLUTION		MD	PT	VMB	VMB
2	12/30/14	SUPPLEMENTAL PRE-FINAL (90%) DESIGN		MD	PT	VMB	VMB
1	9/8/14	PRE-FINAL (90%) DESIGN		PC	PT	VMB	VMB
0	4/5/13	INTERMEDIATE (60%) DESIGN		PC	PT	VMB	VMB

REVISIONS

APPROVED BY	
RAO	SO
	SUPV
	DSGN
	DWN
	CHKD
	OK
	DATE
	SCALES

TOPOCK GROUNDWATER REMEDIATION PROJECT

TRENCH SECTIONS

GAS TRANSMISSION & DISTRIBUTION
PACIFIC GAS AND ELECTRIC COMPANY
SAN FRANCISCO, CALIFORNIA

REGISTERED PROFESSIONAL ENGINEER
BENJAMIN J. WUERL
C 67811
EXP 6/30/17
CIVIL
STATE OF CALIFORNIA

MICROFILM	
BILL OF MATL	
DWG LIST	
SUPSDS	
SUPSD BY	
SHEET NO.	of SHEETS
C-07-101	REV 4

N1808

11/02/2015, 15:04, G:\Graphics\ART\TOPOCK-011Submittal_100%\DWGs\C-Civil\C-07-100 to 106_PipeTrenchDetails.dwg, Tab: C-07-101

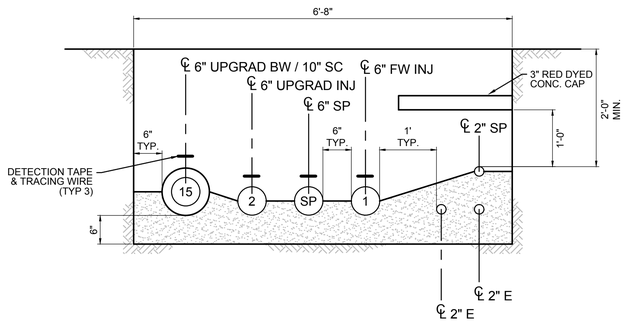

H1 SECTION
3/4" = 1'-0"
C-07-25

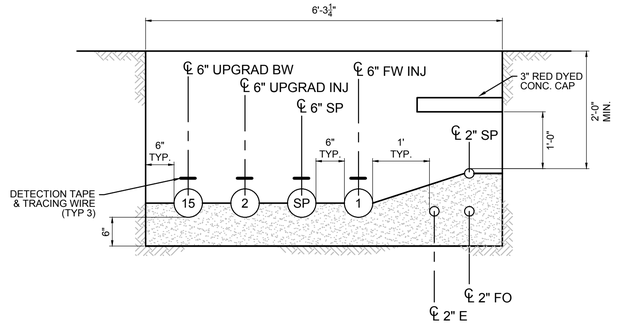

H2 SECTION
3/4" = 1'-0"
C-07-25

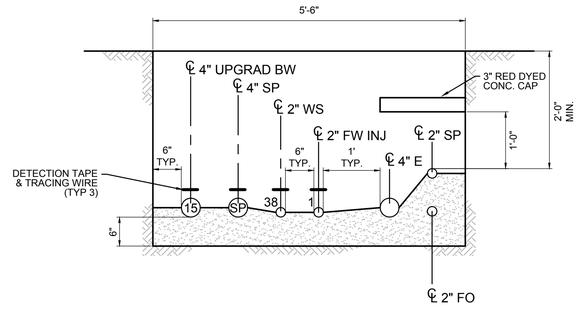

I1 SECTION (OPEN FIELD)
3/4" = 1'-0"
C-07-78,82

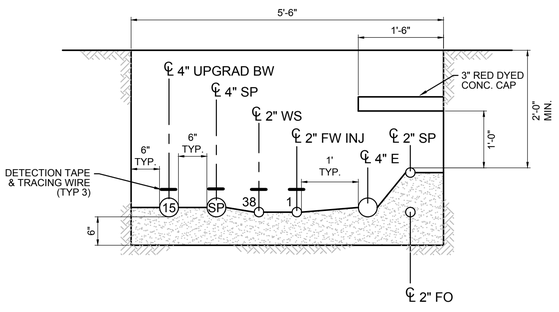

I1 SECTION (GRAVEL ROAD)
3/4" = 1'-0"
C-07-78,82

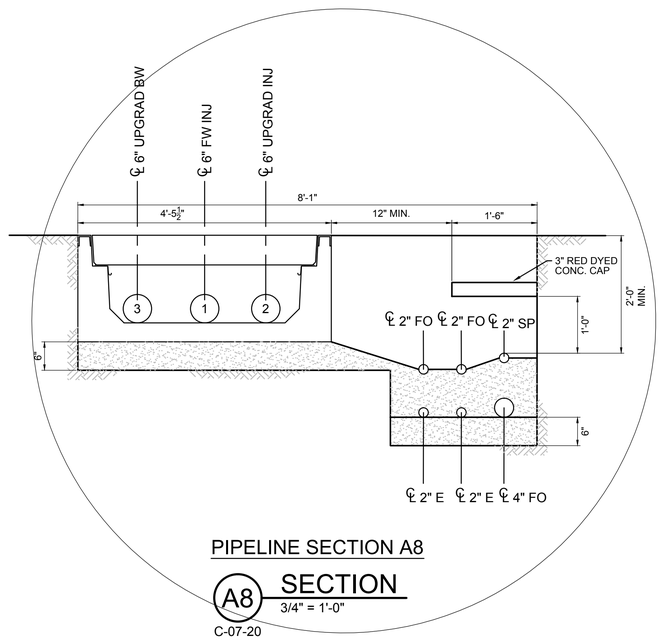

PIPELINE SECTION A8

A8 SECTION
3/4" = 1'-0"
C-07-20
C-07-21

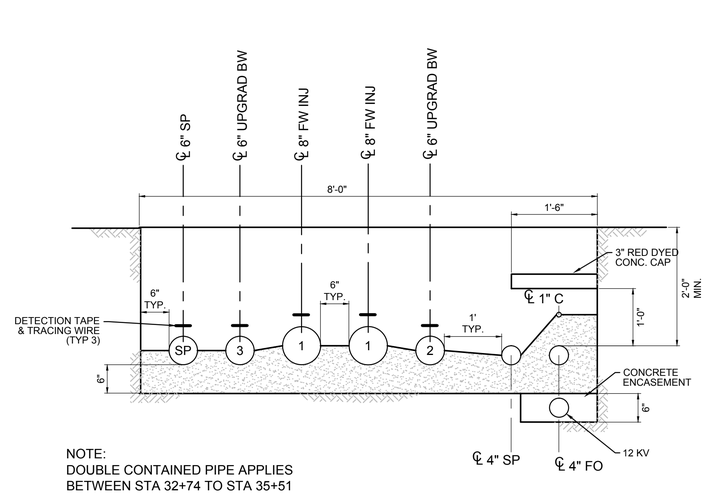

NOTE:
DOUBLE CONTAINED PIPE APPLIES
BETWEEN STA 32+74 TO STA 35+51

PIPELINE SECTION A10

A10 SECTION
3/4" = 1'-0"
C-07-22
C-07-23

- FINAL DESIGN -
FOR AGENCY
APPROVAL ONLY

REGISTERED PROFESSIONAL ENGINEER
BENJAMIN J. WUERL
C 67811
EXP 6/30/17
STATE OF CALIFORNIA

ETIC ENGINEERING

ARCADIS

NO.	DATE	DESCRIPTION	GM/SPEC	DWN	CHKD	SUPV	APVD BY
4	11/18/15	FINAL DESIGN		AJW	WLM	BW	RAO
3	8/5/15	90% RTC RESOLUTION		AJW	KLD	WLM	BJW
2	12/30/14	SUPPLEMENTAL PRE-FINAL (90%) DESIGN		MD	PT	VMB	VMB
1	9/8/14	PRE-FINAL (90%) DESIGN		PC	PT	VMB	VMB
0	4/5/13	INTERMEDIATE (60%) DESIGN		PC	PT	VMB	VMB

REVISIONS

APPROVED BY	
RAO	SO
	SUPV
	DSGN
	DWN
	CHKD
	OK
	DATE
	SCALES

TOPOCK GROUNDWATER REMEDIATION PROJECT

PIPELINE SECTIONS

GAS TRANSMISSION & DISTRIBUTION
PACIFIC GAS AND ELECTRIC COMPANY
SAN FRANCISCO, CALIFORNIA

MICROFILM	
BILL OF MATL	
DWG LIST	
SUPSDS	
SUPSD BY	
SHEET NO. of SHEETS	
C-07-102	REV 4

11/02/2015, 15:05, G:\Graphics\ART\TOPOCK-011Submittal_100%\DWGs\C-Civil\C-07-100 to 106_PipeTrenchDetails.dwg, Tab: C-07-102

N1808

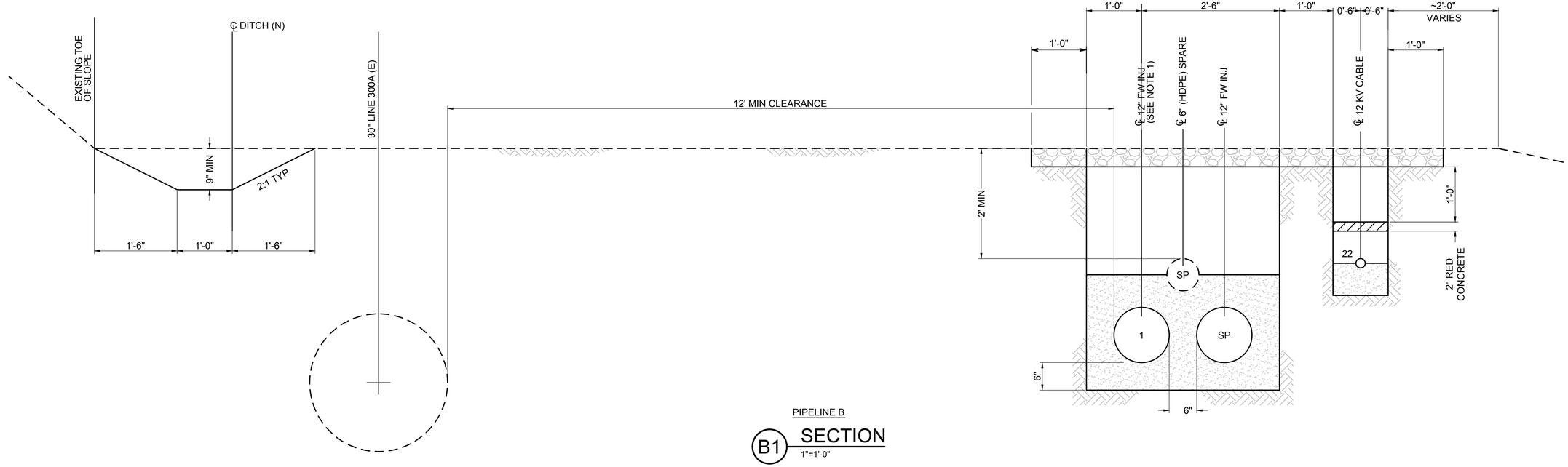

PIPELINE B

B1 SECTION

1"=1'-0"

C-07-26
C-07-27

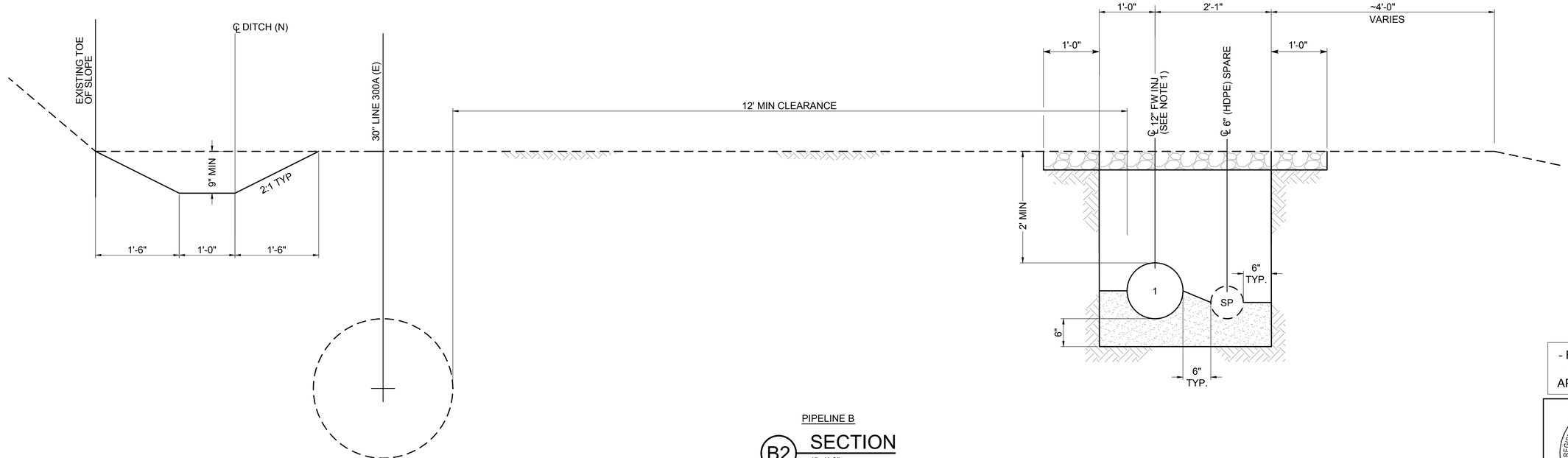

PIPELINE B

B2 SECTION

1"=1'-0"

C-07-28,-29

- FINAL DESIGN - FOR AGENCY APPROVAL ONLY

REGISTERED PROFESSIONAL ENGINEER
BENJAMIN J. WUERL
C 67811
EXP 6/30/17
STATE OF CALIFORNIA

ETIC ENGINEERING

ARCADIS

NO.	DATE	DESCRIPTION	GM/SPEC	DWN	CHKD	SUPV	APVD BY
3	11/18/15	FINAL DESIGN		AJW	WLM	BW	RAO
2	8/5/15	90% RTC RESOLUTION		AJW	KLD	WLM	BJW
1	9/8/14	PRE-FINAL (90%) DESIGN		PC	PT	VMB	VMB
0	4/5/13	INTERMEDIATE (60%) DESIGN		PC	PT	VMB	VMB

REVISIONS

APPROVED BY	
RAO	SO
	SUPV
	DSGN
	DWN
	CHKD
	OK
	DATE
	SCALES

TOPOCK GROUNDWATER REMEDIATION PROJECT

PIPELINE SECTIONS

GAS TRANSMISSION & DISTRIBUTION
PACIFIC GAS AND ELECTRIC COMPANY
SAN FRANCISCO, CALIFORNIA

MICROFILM	
BILL OF MATL	
DWG LIST	
SUPSDS	
SUPSD BY	
SHEET NO.	of SHEETS
C-07-103	REV 3

N1808

11/02/2015, 15:05, G:\Graphics\ART\TOPOCK-01\Submittal_100%\DWGs\C-Civil\C-07-100 to 106_PipeTrenchDetails.dwg, Tab: C-07-103

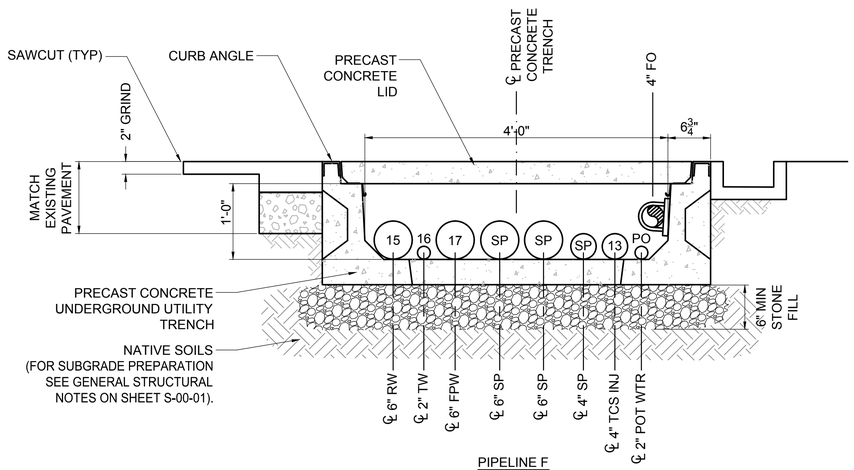

PIPELINE F

F5 SECTION

1"=1'-0"

C-07-70

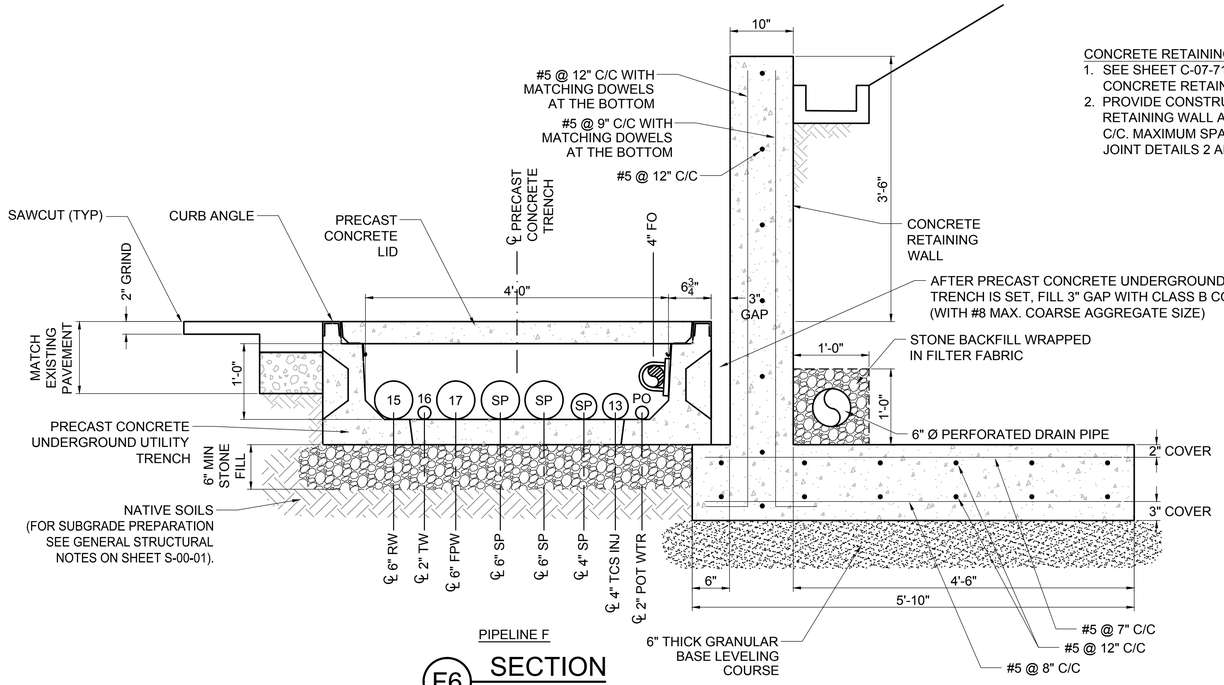

PIPELINE F

F6 SECTION

1"=1'-0"

C-07-70
C-07-71

CONCRETE RETAINING WALL NOTES:

1. SEE SHEET C-07-71 FOR PLAN VIEW EXTENT OF CONCRETE RETAINING WALL.
2. PROVIDE CONSTRUCTION JOINTS IN CONCRETE RETAINING WALL AND FOOTING EVERY 50'-0" C/C. MAXIMUM SPACING. SEE CONSTRUCTION JOINT DETAILS 2 AND 3 ON SHEET S-00-01.

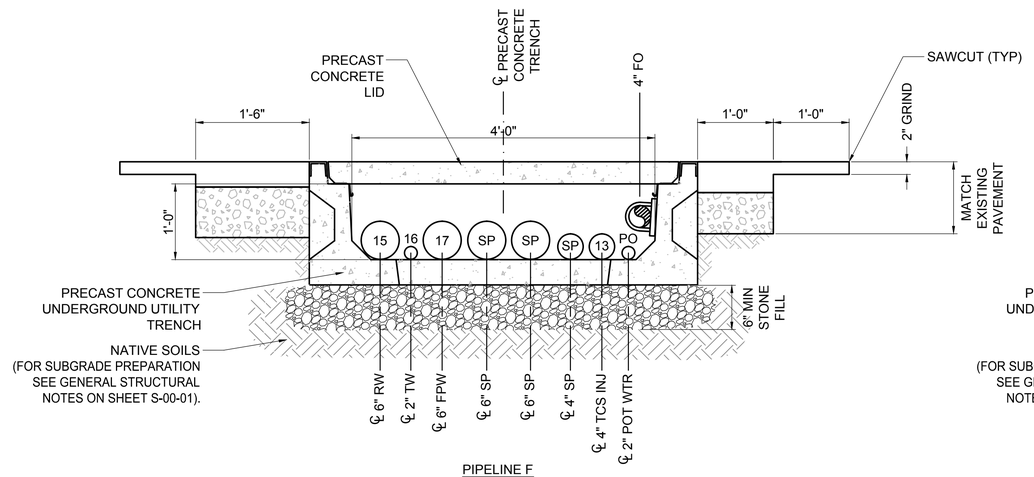

PIPELINE F

F7 SECTION

1"=1'-0"

C-07-71

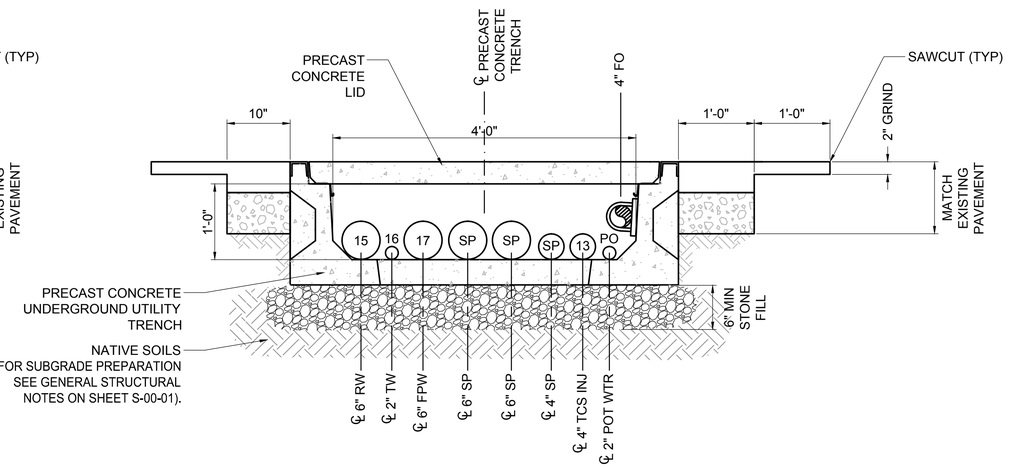

PIPELINE F

F8 SECTION

1"=1'-0"

C-07-72

PRECAST CONCRETE UNDERGROUND UTILITY TRENCH NOTES:

1. PRECAST CONCRETE UTILITY TRENCH COMPONENTS (I.E. LIDS, WALLS, AND BASE SLAB) SHALL BE DESIGNED BY PRECAST MANUFACTURER WITH LOADING IN ACCORDANCE WITH AASHTO HS20-44 AND PER SPECIFICATION SECTION 03 40 00.
2. CONCRETE SHALL BE 5,000 P.S.I. COMPRESSIVE STRENGTH @ 28 DAYS. REINFORCING STEEL SHALL BE ASTM A-615.
3. ALL PIPING AND CONDUIT SHALL BE SECURED TO THE WALLS OR BASE SLAB OF THE CONCRETE TRENCH WITH ANCHOR BOLTS, UNISTRUT, OR CONCRETE PIPE SUPPORTS. CONTRACTOR SHALL INSTALL SUPPORTS WHEREVER NECESSARY TO PROPERLY SUPPORT PIPING AND CONDUIT PER SPECIFICATION 40 05 15.
4. CONTRACTOR RESPONSIBLE FOR LOCATING AND VERIFYING LOCATION OF ALL UTILITIES LOCATED WITHIN AREAS TO BE AFFECTED BY CONSTRUCTION.
5. ALL PIPE PENETRATIONS SHALL BE LINK SEALED IN ACCORDANCE WITH SPECIFICATIONS.
6. SEE MECHANICAL DRAWINGS FOR ALL PIPE PENETRATIONS.

REGISTERED PROFESSIONAL ENGINEER BENJAMIN J. WUEST C 67811 EXP 6/30/17 STATE OF CALIFORNIA

- FINAL DESIGN - FOR AGENCY APPROVAL ONLY

ETIC ENGINEERING

ARCADIS

NO.	DATE	DESCRIPTION	GM/SPEC	DWN	CHKD	SUPV	APVD BY
2	11/18/15	FINAL DESIGN	AJW	WLM	BW	RAO	
1	9/8/14	PRE-FINAL (90%) DESIGN					
0	4/5/13	INTERMEDIATE (60%) DESIGN					

REVISIONS

APPROVED BY	
RAO	SO
	SUPV
	DSGN
	DWN
	CHKD
	OK
	DATE
	SCALES

TOPOCK GROUNDWATER REMEDIATION PROJECT

PIPELINE SECTIONS

GAS TRANSMISSION & DISTRIBUTION
PACIFIC GAS AND ELECTRIC COMPANY
SAN FRANCISCO, CALIFORNIA

MICROFILM	
BILL OF MATL	
DWG LIST	
SUPSDS	
SUPSD BY	
SHEET NO.	of SHEETS
C-07-104	REV 2

11/02/2015, 15:05, G:\Graphics\ARITOPOCK-01\Submittal_100%\DWGs\C-Civil\C-07-100 to 106_PipeTrenchDetails.dwg, Tab: C-07-104

N1808

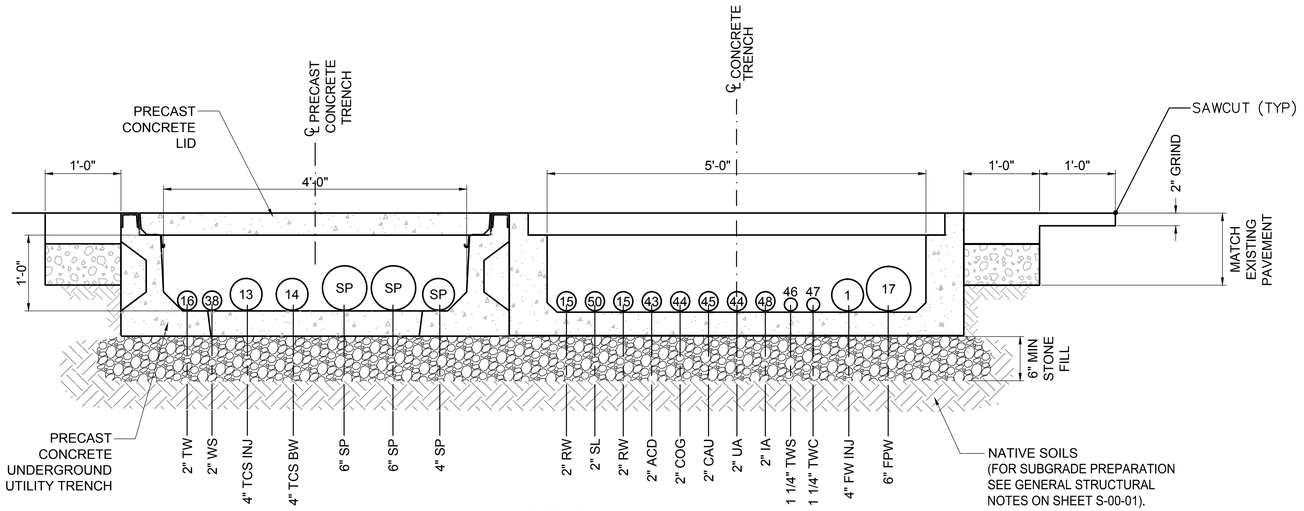

PIPELINE M

M1 SECTION

1"=1'-0"

C-07-75

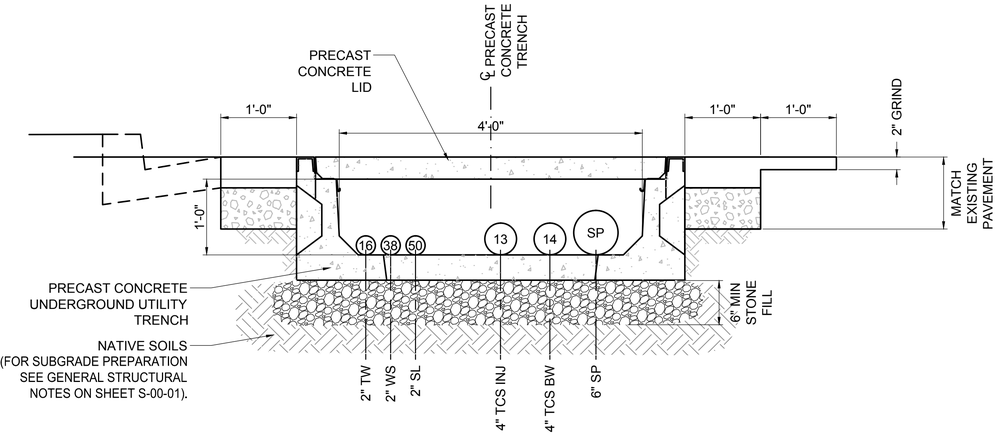

PIPELINE M

M2 SECTION

1"=1'-0"

C-07-75

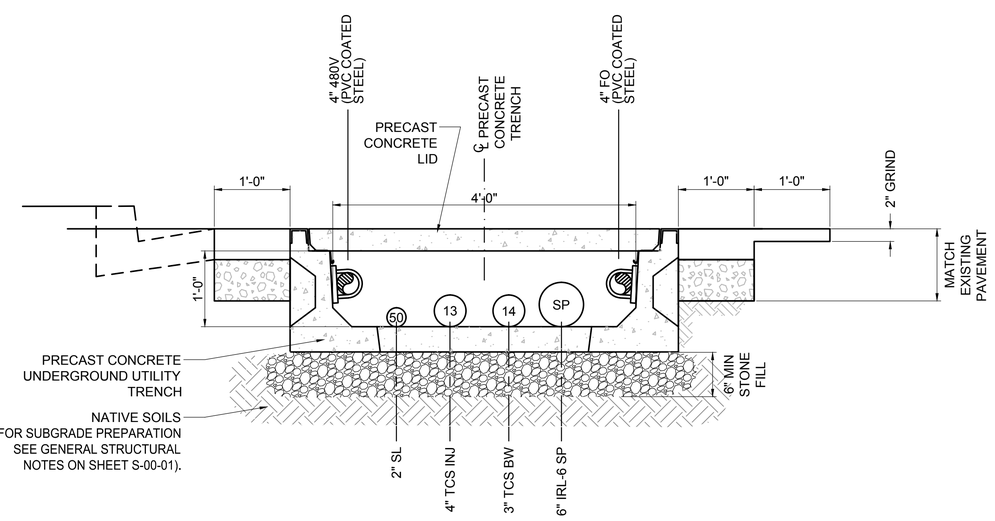

PIPELINE M

M3 SECTION

1"=1'-0"

C-07-75

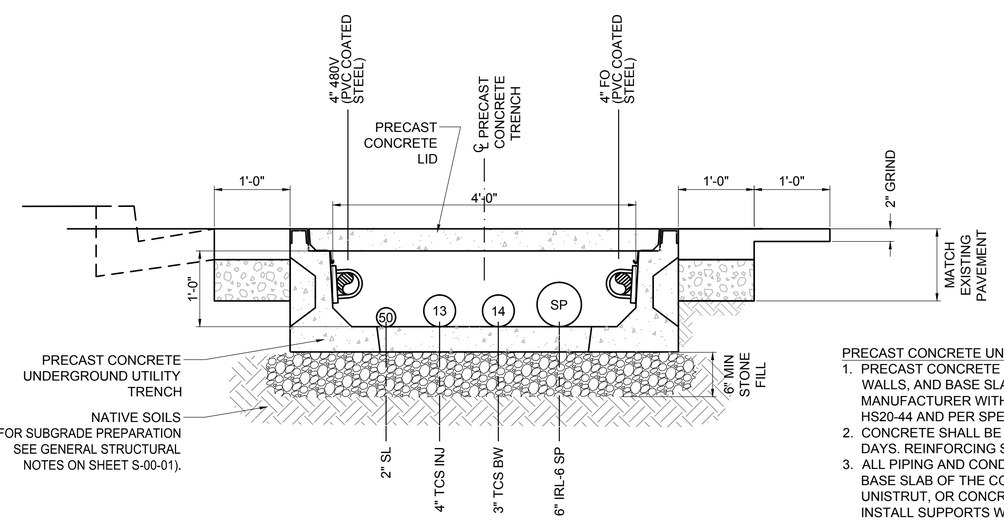

PIPELINE M

M4 SECTION

1"=1'-0"

C-07-75
C-07-76

PRECAST CONCRETE UNDERGROUND UTILITY TRENCH NOTES :

1. PRECAST CONCRETE UTILITY TRENCH COMPONENTS (I.E. LIDS, WALLS, AND BASE SLAB) SHALL BE DESIGNED BY PRECAST MANUFACTURER WITH LOADING IN ACCORDANCE WITH AASHTO HS20-44 AND PER SPECIFICATION SECTION 03 40 00.
2. CONCRETE SHALL BE 5,000 P.S.I. COMPRESSIVE STRENGTH @ 28 DAYS. REINFORCING STEEL SHALL BE ASTM A-615.
3. ALL PIPING AND CONDUIT SHALL BE SECURED TO THE WALLS OR BASE SLAB OF THE CONCRETE TRENCH WITH ANCHOR BOLTS, UNISTRUT, OR CONCRETE PIPE SUPPORTS. CONTRACTOR SHALL INSTALL SUPPORTS WHEREVER NECESSARY TO PROPERLY SUPPORT PIPING AND CONDUIT PER SPECIFICATION 40 05 15.
4. CONTRACTOR RESPONSIBLE FOR LOCATING AND VERIFYING LOCATION OF ALL UTILITIES LOCATED WITHIN AREAS TO BE AFFECTED BY CONSTRUCTION.
5. ALL PIPE PENETRATIONS SHALL BE LINK SEALED IN ACCORDANCE WITH SPECIFICATIONS.
6. SEE MECHANICAL DRAWINGS FOR ALL PIPE PENETRATIONS.

REGISTERED PROFESSIONAL ENGINEER
BENJAMIN J. WUERL
C 67811
EXP 6/30/17
STATE OF CALIFORNIA

- FINAL DESIGN -
FOR AGENCY APPROVAL ONLY

ETIC ENGINEERING

ARCADIS

NO.	DATE	DESCRIPTION	GM/SPEC	DWN	CHKD	SUPV	APVD BY
2	11/18/15	FINAL DESIGN	AJW	WLM	BW	RAO	
1	9/8/14	PRE-FINAL (90%) DESIGN					
0	4/5/13	INTERMEDIATE (60%) DESIGN					

REVISIONS

APPROVED BY	
RAO	SO
	SUPV
	DSGN
	DWN
	CHKD
	OK
	DATE
	SCALES

TOPOCK GROUNDWATER REMEDIATION PROJECT

PIPELINE SECTIONS

GAS TRANSMISSION & DISTRIBUTION
PACIFIC GAS AND ELECTRIC COMPANY
SAN FRANCISCO, CALIFORNIA

MICROFILM	
BILL OF MATL	
DWG LIST	
SUPSDS	
SUPSD BY	
SHEET NO.	of SHEETS
C-07-105	REV 2

N1808

11/02/2015, 15:05, G:\Graphics\ART\TOPOCK-01\Submittal_100%\DWGs\C-Civil\C-07-100 to 106_PipeTrenchDetails.dwg, Tab: C-07-105

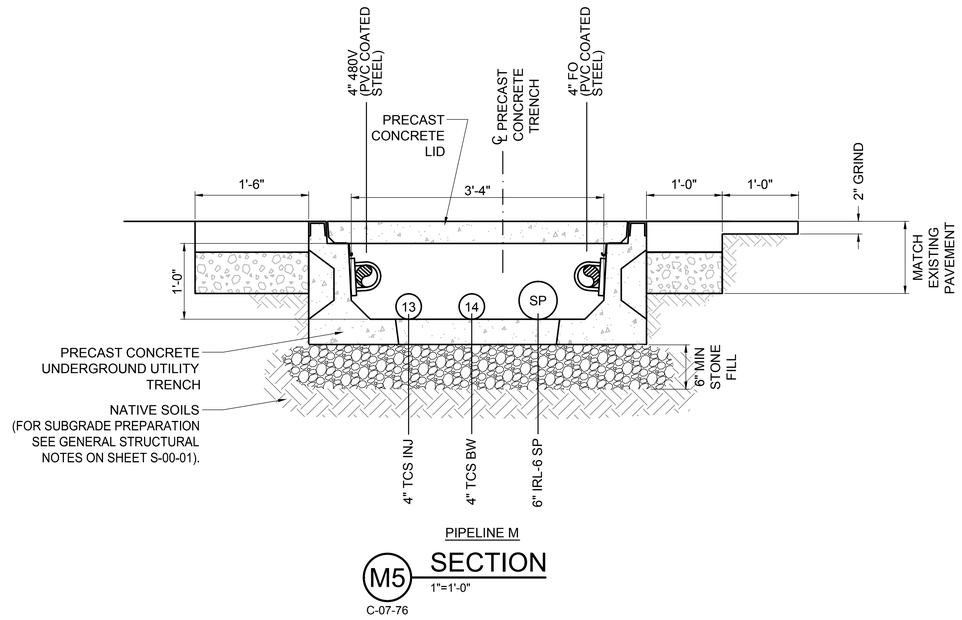

PIPELINE M

M5 SECTION

1"=1'-0"

C-07-76

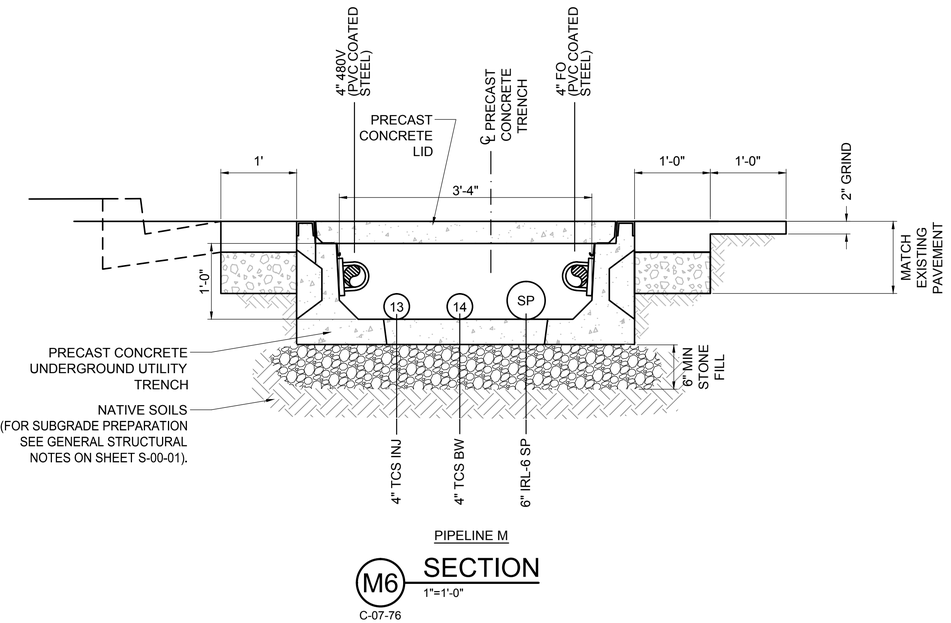

PIPELINE M

M6 SECTION

1"=1'-0"

C-07-76

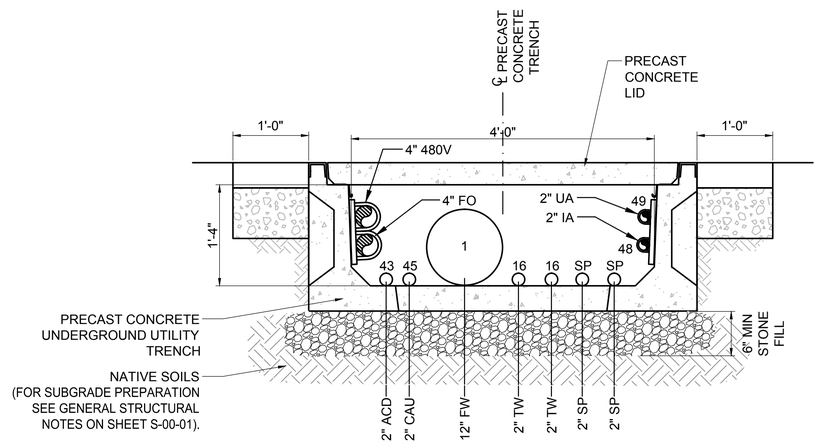

PIPELINE L

L1 SECTION

1"=1'-0"

C-07-74

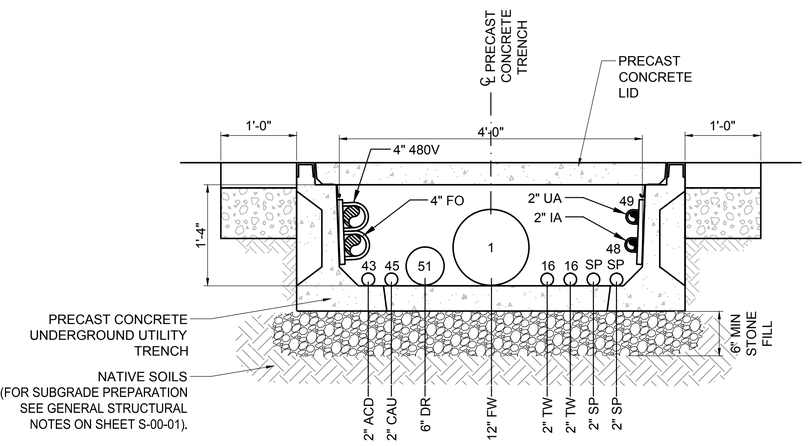

PIPELINE L

L2 SECTION

1"=1'-0"

C-07-74

PRECAST CONCRETE UNDERGROUND UTILITY TRENCH NOTES:

1. PRECAST CONCRETE UTILITY TRENCH COMPONENTS (I.E. LIDS, WALLS, AND BASE SLAB) SHALL BE DESIGNED BY PRECAST MANUFACTURER WITH LOADING IN ACCORDANCE WITH AASHTO HS20-44 AND PER SPECIFICATION SECTION 03 40 00.
2. CONCRETE SHALL BE 5,000 P.S.I. COMPRESSIVE STRENGTH @ 28 DAYS. REINFORCING STEEL SHALL BE ASTM A-615.
3. ALL PIPING AND CONDUIT SHALL BE SECURED TO THE WALLS OR BASE SLAB OF THE CONCRETE TRENCH WITH ANCHOR BOLTS, UNISTRUT, OR CONCRETE PIPE SUPPORTS. CONTRACTOR SHALL INSTALL SUPPORTS WHEREVER NECESSARY TO PROPERLY SUPPORT PIPING AND CONDUIT PER SPECIFICATION 40 05 15.
4. CONTRACTOR RESPONSIBLE FOR LOCATING AND VERIFYING LOCATION OF ALL UTILITIES LOCATED WITHIN AREAS TO BE AFFECTED BY CONSTRUCTION.
5. ALL PIPE PENETRATIONS SHALL BE LINK SEALED IN ACCORDANCE WITH SPECIFICATIONS.
6. SEE MECHANICAL DRAWINGS FOR ALL PIPE PENETRATIONS.

- FINAL DESIGN -
FOR AGENCY APPROVAL ONLY

REGISTERED PROFESSIONAL ENGINEER BENJAMIN J. WUERL C 67811 Exp 6/30/17 STATE OF CALIFORNIA

ETIC ENGINEERING

ARCADIS

NO.	DATE	DESCRIPTION	GM/SPEC	DWN	CHKD	SUPV	APVD BY
2	11/18/15	FINAL DESIGN		AJW	WLM	BW	RAO
1	9/8/14	PRE-FINAL (90%) DESIGN					
0	4/5/13	INTERMEDIATE (60%) DESIGN					

REVISIONS

APPROVED BY	
RAO	SO
	SUPV
	DSGN
	DWN
	CHKD
	OK
	DATE
	SCALES

TOPOCK GROUNDWATER REMEDIATION PROJECT

PIPELINE SECTIONS

GAS TRANSMISSION & DISTRIBUTION
PACIFIC GAS AND ELECTRIC COMPANY
SAN FRANCISCO, CALIFORNIA

MICROFILM	
BILL OF MATL	
DWG LIST	
SUPSDS	
SUPSD BY	
SHEET NO.	of SHEETS
C-07-106	REV 2

11/02/2015, 15:05, G:\Graphics\AR\TOPOCK-01\Submittal_100%\DWG\C-Civil\C-07-100 to 106_PipeTrenchDetails.dwg, Tab: C-07-106

N1808

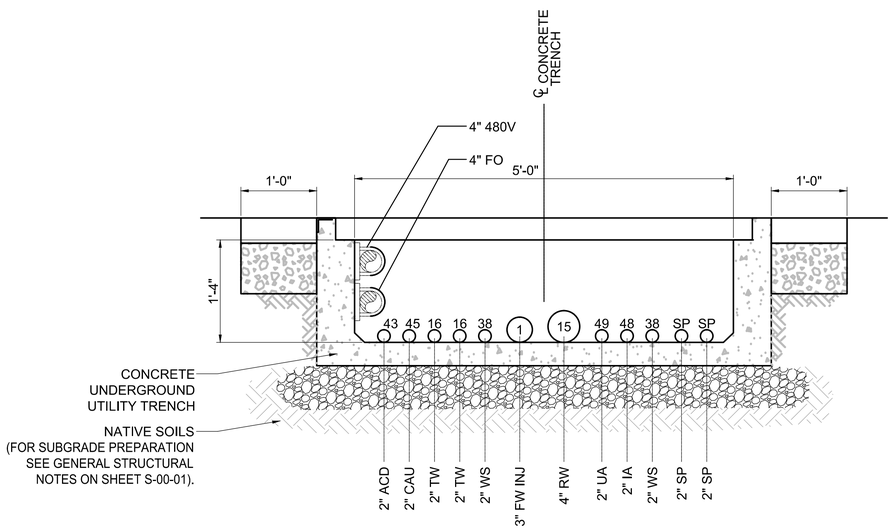

PIPELINE L

L3 SECTION
1"=1'-0"
C-07-74

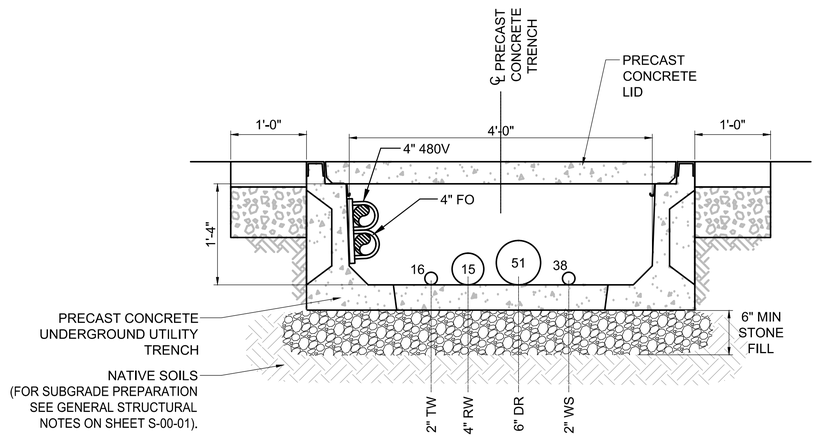

PIPELINE L

K1 SECTION
1"=1'-0"
C-07-73

PRECAST CONCRETE UNDERGROUND UTILITY TRENCH NOTES:

1. PRECAST CONCRETE UTILITY TRENCH COMPONENTS (I.E. LIDS, WALLS, AND BASE SLAB) SHALL BE DESIGNED BY PRECAST MANUFACTURER WITH LOADING IN ACCORDANCE WITH AASHTO HS20-44 AND PER SPECIFICATION SECTION 03 40 00.
2. CONCRETE SHALL BE 5,000 P.S.I. COMPRESSIVE STRENGTH @ 28 DAYS. REINFORCING STEEL SHALL BE ASTM A-615.
3. ALL PIPING AND CONDUIT SHALL BE SECURED TO THE WALLS OR BASE SLAB OF THE CONCRETE TRENCH WITH ANCHOR BOLTS, UNISTRUT, OR CONCRETE PIPE SUPPORTS. CONTRACTOR SHALL INSTALL SUPPORTS WHEREVER NECESSARY TO PROPERLY SUPPORT PIPING AND CONDUIT PER SPECIFICATION 40 05 15.
4. CONTRACTOR RESPONSIBLE FOR LOCATING AND VERIFYING LOCATION OF ALL UTILITIES LOCATED WITHIN AREAS TO BE AFFECTED BY CONSTRUCTION.
5. ALL PIPE PENETRATIONS SHALL BE LINK SEALED IN ACCORDANCE WITH SPECIFICATIONS.
6. SEE MECHANICAL DRAWINGS FOR ALL PIPE PENETRATIONS.

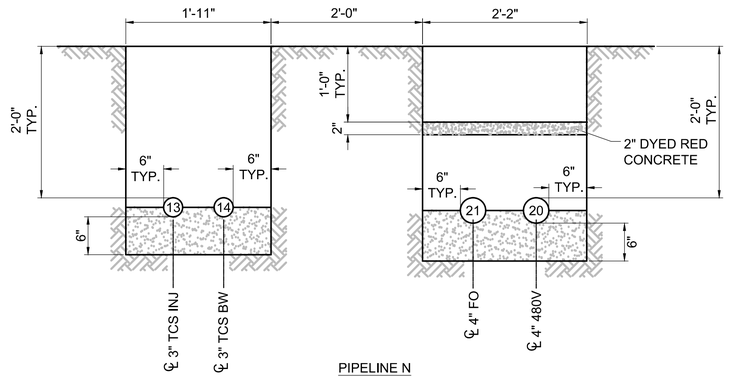

PIPELINE N

N1 SECTION
1"=1'-0"
C-07-77

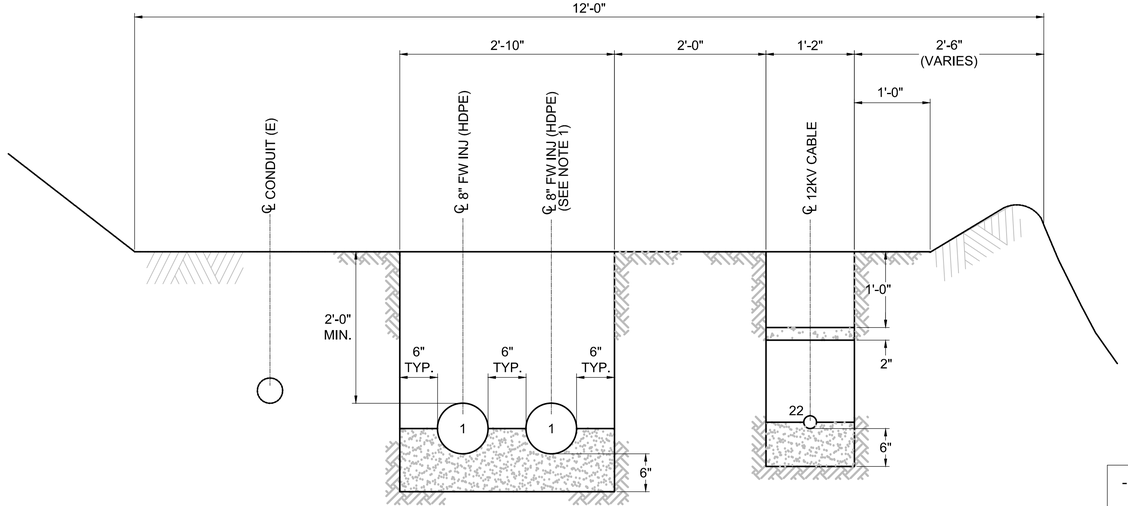

PIPELINE J

J1 SECTION
1"=1'-0"
C-07-69

0 1' 2' 3'
SCALE: 1" = 1'-0"

- FINAL DESIGN - FOR AGENCY APPROVAL ONLY

REGISTERED PROFESSIONAL ENGINEER BENJAMIN J. WUEST C 67811 EXP 6/30/17 STATE OF CALIFORNIA

ETIC ENGINEERING

ARCADIS

NO.	DATE	DESCRIPTION	GM/SPEC	DWN	CHKD	SUPV	APVD BY
2	11/18/15	FINAL DESIGN	AJW	WLM	BW	RAO	
1	9/8/14	PRE-FINAL (90%) DESIGN					
0	4/5/13	INTERMEDIATE (60%) DESIGN					

REVISIONS

APPROVED BY	
RAO	SO
	SUPV
	DSGN
	DWN
	CHKD
	OK
	DATE
	SCALES

TOPOCK GROUNDWATER REMEDIATION PROJECT

PIPELINE SECTIONS

GAS TRANSMISSION & DISTRIBUTION
PACIFIC GAS AND ELECTRIC COMPANY
SAN FRANCISCO, CALIFORNIA

MICROFILM	
BILL OF MATL	
DWG LIST	
SUPSDS	
SUPSD BY	
SHEET NO.	of SHEETS
C-07-107	REV 2

N1808

11/02/2015, 15:07, G:\Graphics\AR\TOPOCK-01\Submittal_100%\DWGs\C-Civil\C-07-107.dwg, Tab: C-07-107

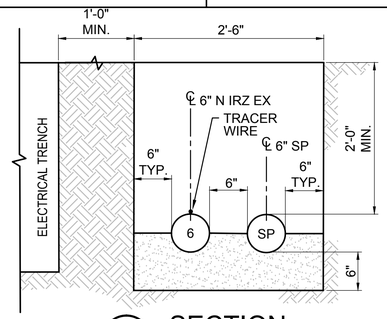

C1 SECTION
1"=1'-0"
C-07-39

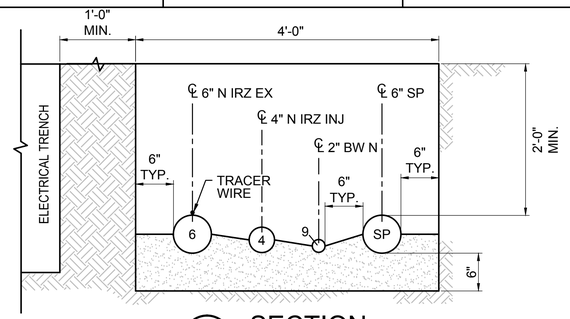

C2 SECTION
1"=1'-0"
C-07-39,-40

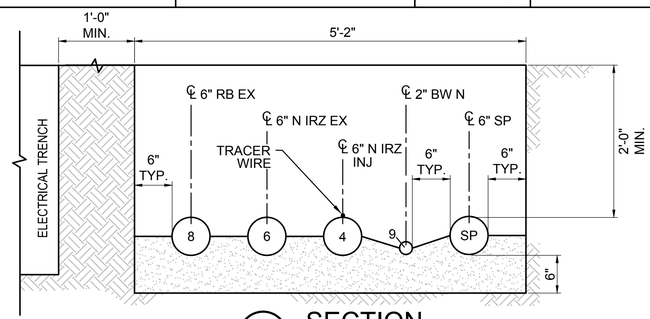

C3 SECTION
1"=1'-0"
C-07-39, -40,-41

NOTES:

1. PIPE SUPPORTS AND CLEANOUTS NOT SHOWN FOR CLARITY.
2. ALL COVERS SHALL BE TRAFFIC RATED.
3. CASING SPACERS NOT SHOWN FOR CLARITY.
4. PIPE BEDDING SHALL EXTEND HALF WAY UP THE PIPES PER THE SPECIFICATIONS.

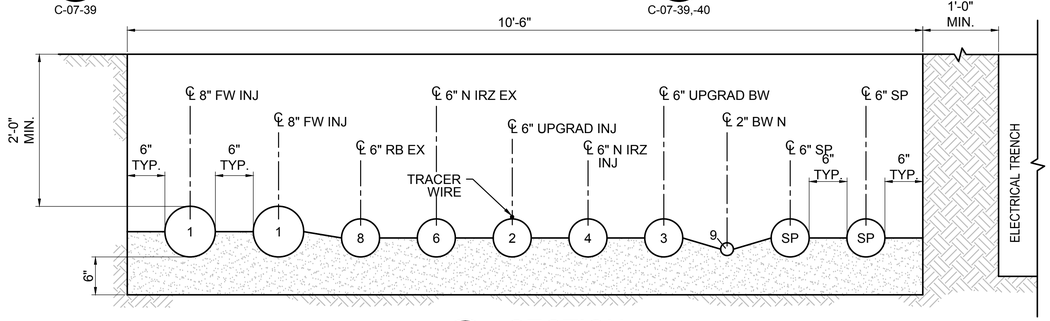

C4 SECTION
1"=1'-0"
C-07-41

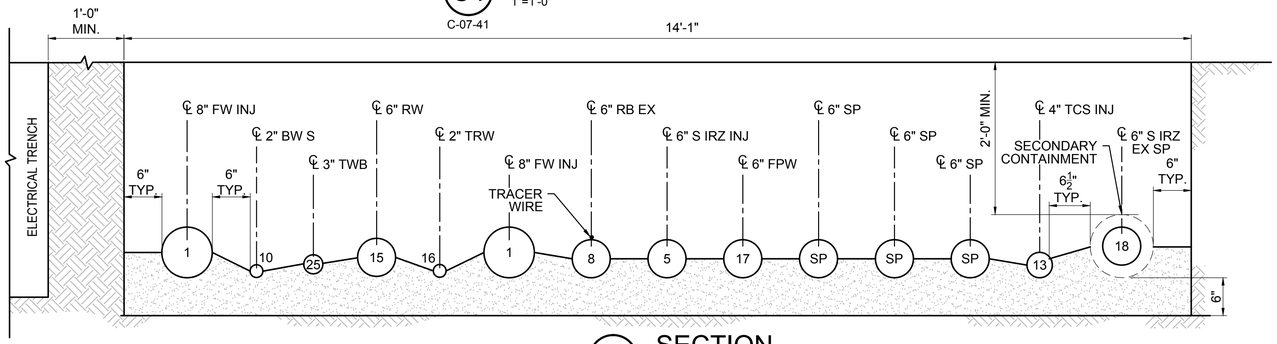

C5 SECTION
1"=1'-0"
C-07-43

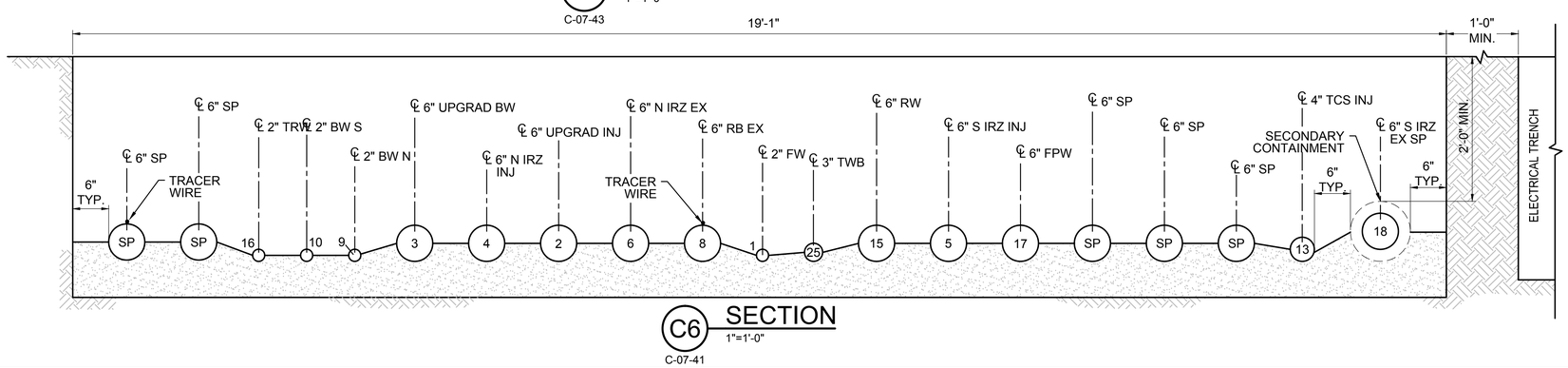

C6 SECTION
1"=1'-0"
C-07-41

- FINAL DESIGN - FOR AGENCY APPROVAL ONLY

REGISTERED PROFESSIONAL ENGINEER BENJAMIN J. WUERL C 67811 EXP 6/30/17 STATE OF CALIFORNIA

ETIC ENGINEERING

ARCADIS

NO.	DATE	DESCRIPTION	GM/SPEC	DWN	CHKD	SUPV	APVD	BY
3	11/18/15	FINAL DESIGN		AJW	WLM	BW	RAO	
2	8/5/15	90% RTC RESOLUTION		AJW	KLD	WLM	BJW	
1	9/8/14	PRE-FINAL (90%) DESIGN		AJW	BAS	JPB	JEF	
0	4/5/13	INTERMEDIATE (60%) DESIGN		AJW	KLD	JPB	JEF	

REVISIONS

APPROVED BY	
	SO
	SUPV
RAO	DSGN
	DWN
	CHKD
	OK
	DATE
	SCALES

TOPOCK GROUNDWATER REMEDIATION PROJECT

TRENCH SECTIONS

GAS TRANSMISSION & DISTRIBUTION
PACIFIC GAS AND ELECTRIC COMPANY
SAN FRANCISCO, CALIFORNIA

MICROFILM	
BILL OF MATL	
DWG LIST	
SUPSDS	
SUPSD BY	
SHEET NO. of SHEETS	
C-07-108	REV 3

N1808

11/02/2015, 15:18, G:\Graphics\ARI\TOPOCK-01\Submittal_100%\DWGs\C-Civil\C-07-108 to 122_PipeTrenchDetails.dwg, Tab: C-07-108

NOTES:

1. PIPE SUPPORTS AND CLEANOUTS NOT SHOWN FOR CLARITY.
2. ALL COVERS SHALL BE TRAFFIC RATED.
3. CASING SPACERS NOT SHOWN FOR CLARITY.
4. PIPE BEDDING SHALL EXTEND HALF WAY UP THE PIPES PER THE SPECIFICATIONS.

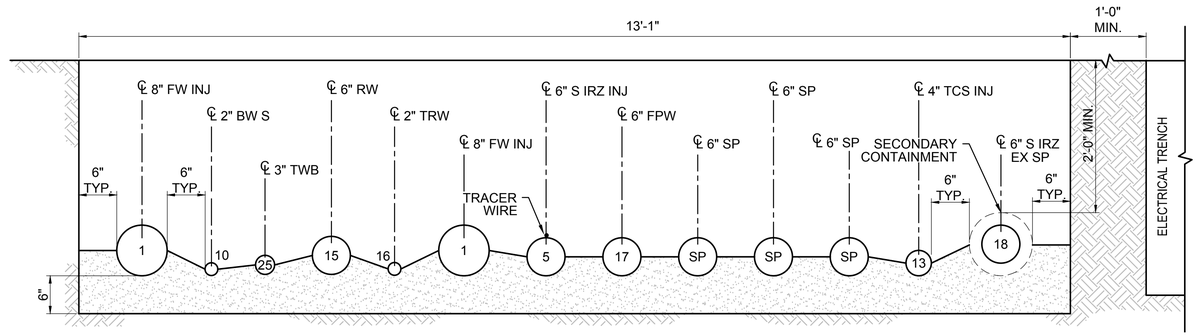

C7 SECTION
1"=1'-0"
C-07-44

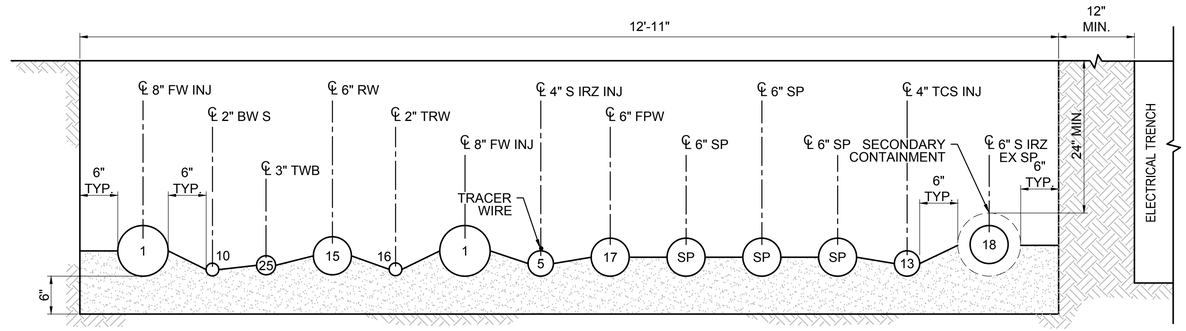

C8 SECTION
1"=1'-0"
C-07-44,-45,-46

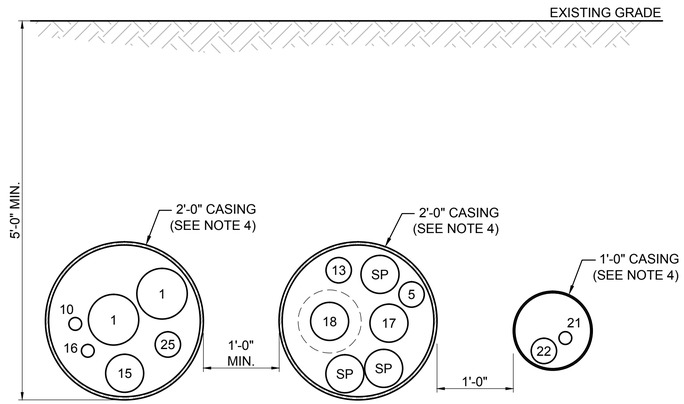

C9 SECTION
1"=1'-0"
C-07-46,-47

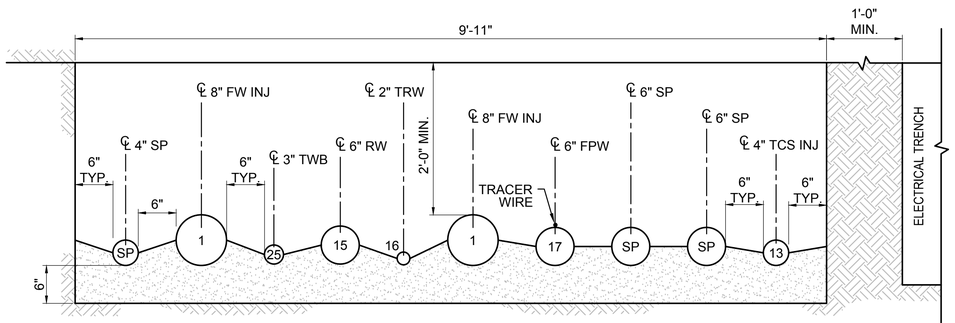

C10 SECTION
1"=1'-0"
C-07-47

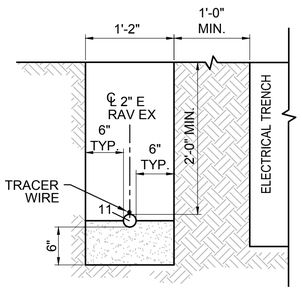

C11 SECTION
1"=1'-0"
C-07-47,-48

- FINAL DESIGN - FOR AGENCY APPROVAL ONLY

REGISTERED PROFESSIONAL ENGINEER BENJAMIN J. WUERL C 67811 EXP 6/30/17 STATE OF CALIFORNIA

NO.	DATE	DESCRIPTION	GM/SPEC	DWN	CHKD	SUPV	APVD BY
3	11/18/15	FINAL DESIGN		AJW	WLM	BW	RAO
2	8/5/15	90% RTC RESOLUTION		AJW	KLD	WLM	BJW
1	9/8/14	PRE-FINAL (90%) DESIGN		AJW	BAS	JPB	JEF
0	4/5/13	INTERMEDIATE (60%) DESIGN		AJW	KLD	JPB	JEF

REVISIONS

APPROVED BY: RAO

SO
SUPV
DSGN
DWN
CHKD
OK
DATE
SCALES

TOPOCK GROUNDWATER REMEDIATION PROJECT

TRENCH SECTIONS

GAS TRANSMISSION & DISTRIBUTION
PACIFIC GAS AND ELECTRIC COMPANY
SAN FRANCISCO, CALIFORNIA

MICROFILM
BILL OF MATL
DWG LIST
SUPSDS
SUPSD BY
SHEET NO. C-07-109 of SHEETS
REV 3

ETIC ENGINEERING
ARCADIS

N1808

11/02/2015, 15:18, G:\Graphics\ARR\TOPOCK-01\Submittal_100%\DWGs\C-Civil\C-07-108 to 122_PipeTrenchDetails.dwg, Tab: C-07-109

NOTES:

1. PIPE SUPPORTS AND CLEANOUTS NOT SHOWN FOR CLARITY.
2. ALL COVERS SHALL BE TRAFFIC RATED.
3. PIPE BEDDING SHALL EXTEND HALF WAY UP THE PIPES PER THE SPECIFICATIONS.

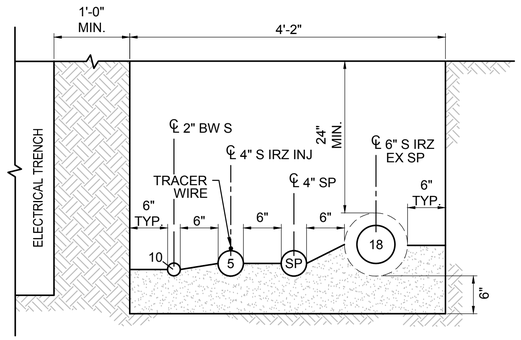

C14 C15 C16 SECTION
1"=1'-0"
C-07,49,-50

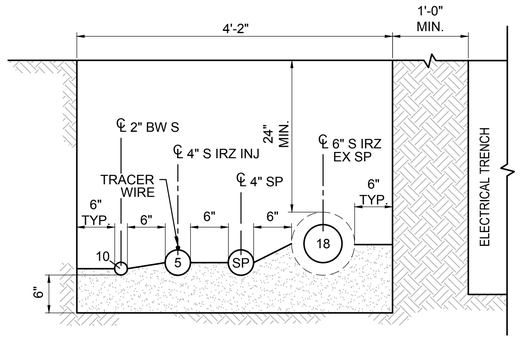

C17 SECTION
1"=1'-0"
C-07-51

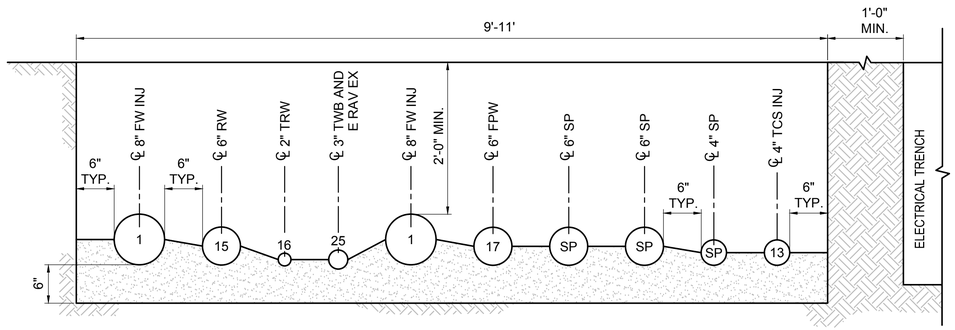

F1 SECTION
1"=1'-0"
C-07-52

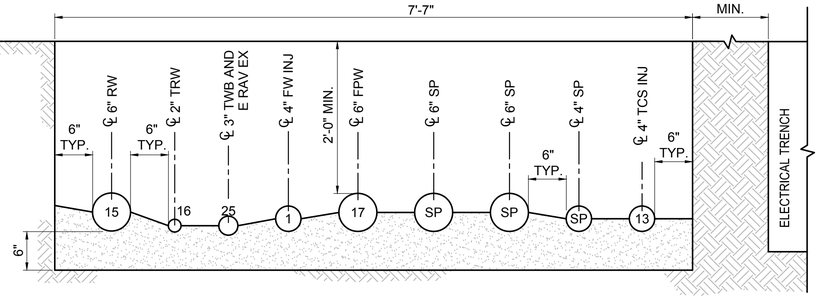

F2 SECTION
1"=1'-0"
C-07-52

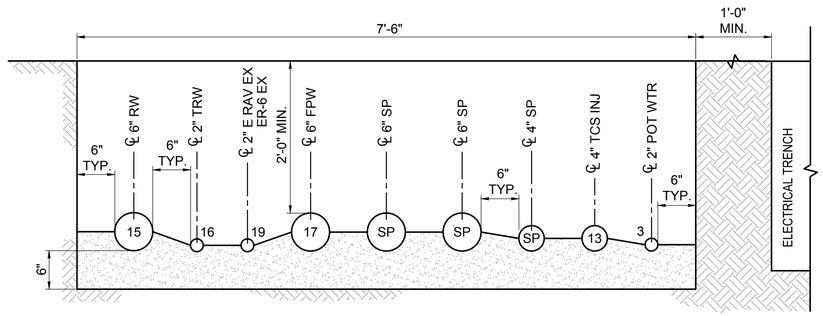

F3 SECTION
1"=1'-0"
C-07-52,-53

- FINAL DESIGN -
FOR AGENCY
APPROVAL ONLY

REGISTERED PROFESSIONAL ENGINEER
BENJAMIN J. WUERL
C 67811
EXP 6/30/17
STATE OF CALIFORNIA

ETIC ENGINEERING

ARCADIS

NO.	DATE	DESCRIPTION	GM/SPEC	DWN	CHKD	SUPV	APVD BY
3	11/18/15	FINAL DESIGN	AJW	WLM	BW	RAO	
2	8/5/15	90% RTC RESOLUTION	AJW	KLD	WLM	BJW	
1	9/8/14	PRE-FINAL (90%) DESIGN	AJW	BAS	JPB	JEF	
0	4/5/13	INTERMEDIATE (60%) DESIGN	AJW	KLD	JPB	JEF	

REVISIONS

APPROVED BY	
SO	
SUPV	JPB
DSGN	BAS
DWN	AJW
CHKD	JPB
OK	JEF
DATE	08/05/15
SCALES	1" = 1'-0"

TOPOCK GROUNDWATER REMEDIATION PROJECT

TRENCH SECTIONS

GAS TRANSMISSION & DISTRIBUTION
PACIFIC GAS AND ELECTRIC COMPANY
SAN FRANCISCO, CALIFORNIA

MICROFILM	
BILL OF MATL	
DWG LIST	
SUPSDS	
SUPSD BY	
SHEET NO. of SHEETS	
C-07-110	REV 3

N1808

11/02/2015, 15:18, G:\Graphics\ART\TOPOCK\C-01\Submittal_100%\DWGs\C-Civil\C-[07-108 to 122_PipeTrenchDetails.dwg, Tab: C-07-110

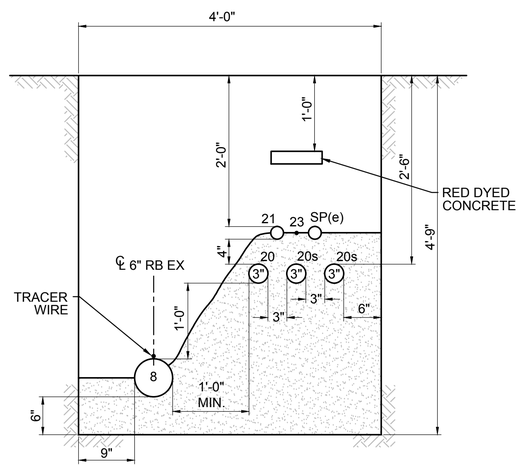

G1 G5 SECTION
1"=1'-0"
C-07-54,-55,-56,-57,-58

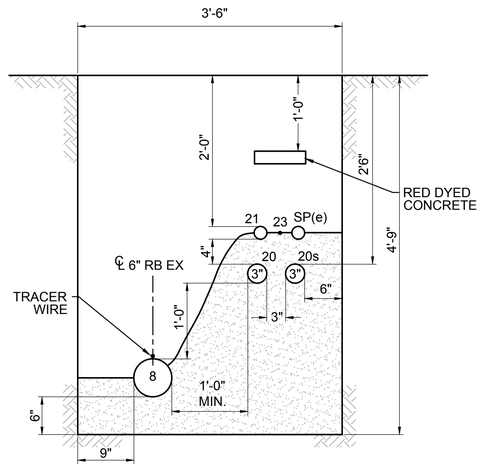

G2 G4 SECTION
1"=1'-0"
C-07-54,-55,-56,-57,-58

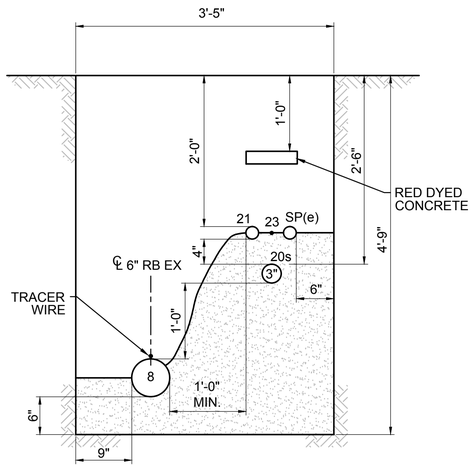

G3 SECTION
1"=1'-0"
C-07-54,-55,-56,-57,-58

NOTES:
1. PIPE SUPPORTS AND CLEANOUTS NOT SHOWN FOR CLARITY.
2. ALL COVERS SHALL BE TRAFFIC RATED.
3. CASING SPACERS NOT SHOWN FOR CLARITY.
4. PIPE BEDDING SHALL EXTEND HALF WAY UP THE PIPES PER THE SPECIFICATIONS.

ELECTRICAL NOTES:
1. SEE CONDUIT AND CABLE SCHEDULES AND SINGLE LINE DIAGRAMS ON SHEETS E-00-05 THRU E-00-13.
2. BEDDING SHALL EXTEND HALF WAY UP TOP CONDUIT PER THE SPECIFICATIONS.

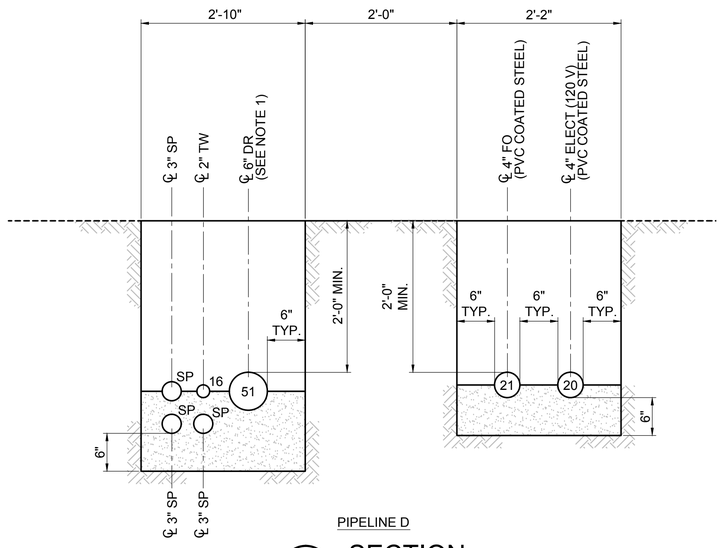

PIPELINE D
D1 SECTION
1"=1'-0"
C-07-79

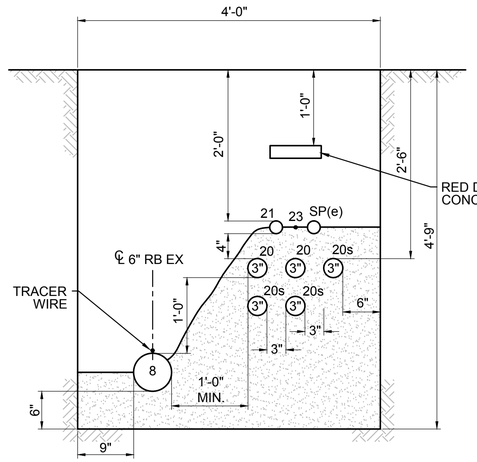

G6 SECTION
1"=1'-0"
C-07-54,-55,-56,-57,-58

C18 SECTION
1"=1'-0"
C-07-59

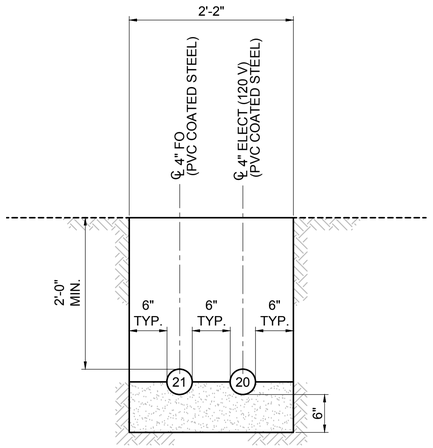

PIPELINE D
D2 SECTION
1"=1'-0"
C-07-79

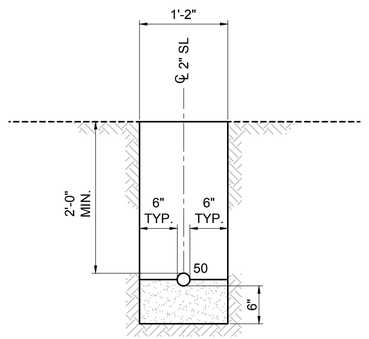

PIPELINE T
T1 SECTION
1"=1'-0"
C-07-81

- FINAL DESIGN - FOR AGENCY APPROVAL ONLY

REGISTERED PROFESSIONAL ENGINEER BENJAMIN J. WUERL C 67811 EXP 6/30/17 CIVIL STATE OF CALIFORNIA

ETIC ENGINEERING

ARCADIS

NO.	DATE	DESCRIPTION	GM/SPEC	DWN	CHKD	SUPV	APVD BY
2	11/18/15	FINAL DESIGN		AJW	WLM	BW	RAO
1	9/8/14	PRE-FINAL (90%) DESIGN		AJW	BAS	JPB	JEF
0	4/5/13	INTERMEDIATE (60%) DESIGN		AJW	KLD	JPB	JEF

REVISIONS

APPROVED BY	
RAO	SO
	SUPV
	DSGN
	DWN
	CHKD
	OK
	DATE
	SCALES

TOPOCK GROUNDWATER REMEDIATION PROJECT

TRENCH SECTIONS

GAS TRANSMISSION & DISTRIBUTION
PACIFIC GAS AND ELECTRIC COMPANY
SAN FRANCISCO, CALIFORNIA

MICROFILM	
BILL OF MATL	
DWG LIST	
SUPSDS	
SUPSD BY	
SHEET NO.	of SHEETS
C-07-111	REV 2

11/02/2015, 15:18, G:\Graphics\ARIT\TOPOCK-01\Submittal_100%\DWGs\C-Civil\C-07-108 to 122_PipeTrenchDetails.dwg, Tab: C-07-111

N1808

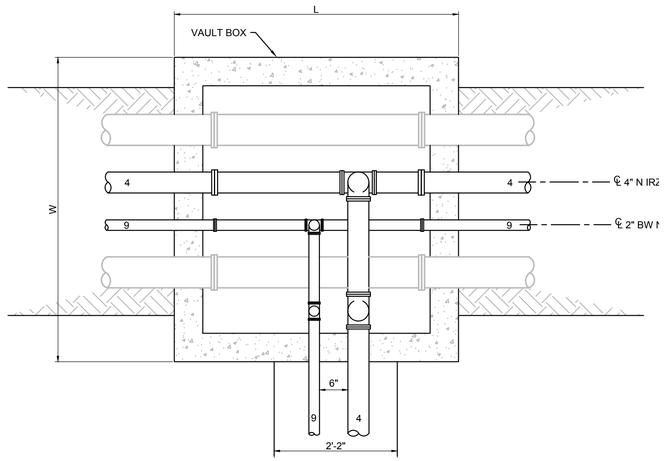

CONNECTION TO PROPOSED AND FUTURE PROVISIONAL INJECTION WELLS

1 DETAIL
3/4"=1'-0"
C-07-39

NOTES:
1. PIPE SUPPORTS AND CLEANOUTS NOT SHOWN FOR CLARITY.
2. ALL COVERS SHALL BE TRAFFIC RATED.
3. CASING SPACERS NOT SHOWN FOR CLARITY.

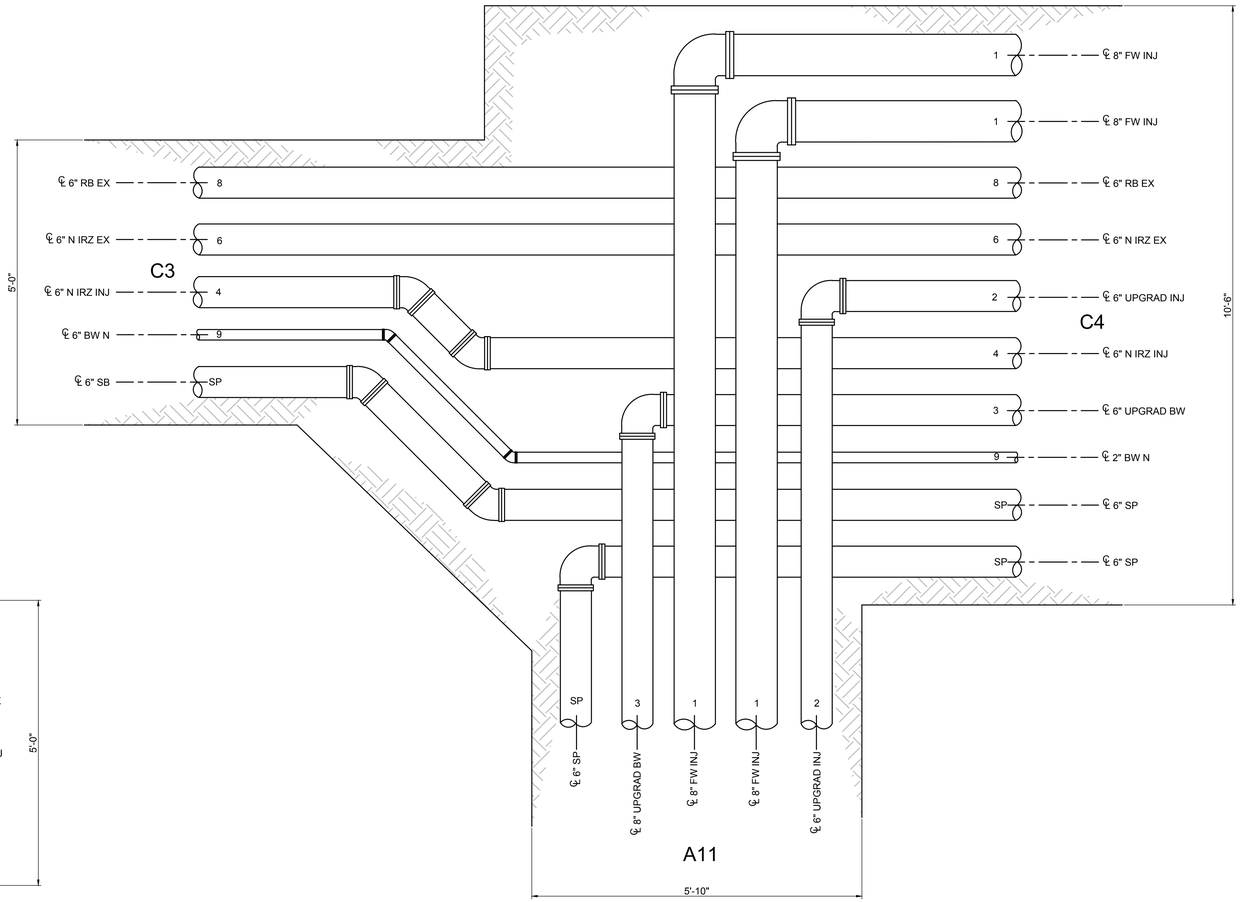

3 DETAIL
3/4"=1'-0"
C-07-24, -41

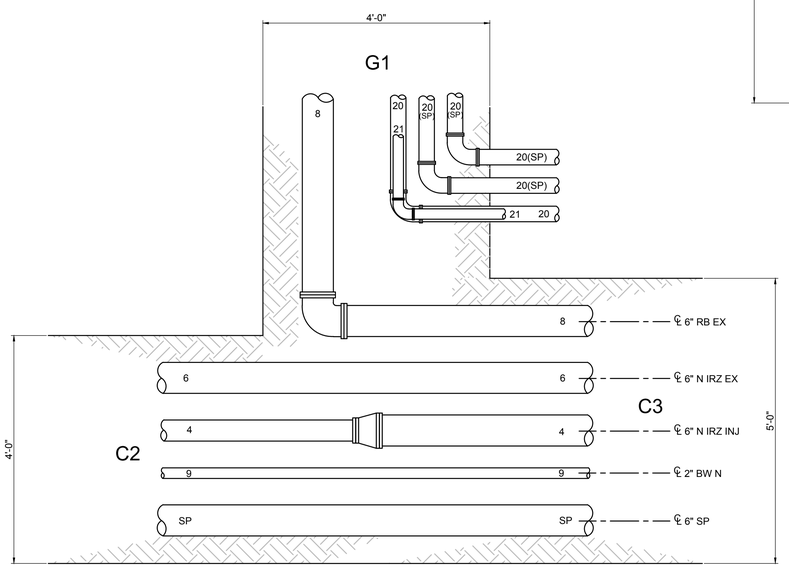

2 DETAIL
3/4"=1'-0"
C-07-39

- FINAL DESIGN - FOR AGENCY APPROVAL ONLY

REGISTERED PROFESSIONAL ENGINEER
BENJAMIN J. WUSEL
C 67811
EXP 6/30/17
CIVIL
STATE OF CALIFORNIA

NO.	DATE	DESCRIPTION	GM/SPEC	DWN	CHKD	SUPV	APVD BY
2	11/18/15	FINAL DESIGN		AJW	WLM	BW	RAO
1	9/8/14	PRE-FINAL (90%) DESIGN		AJW	BAS	JPB	JEF
0	4/5/13	INTERMEDIATE (60%) DESIGN		AJW	KLD	JPB	JEF

REVISIONS

ETIC ENGINEERING

ARCADIS

APPROVED BY	
RAO	

SO
SUPV
DSGN
DWN
CHKD
OK
DATE
SCALES

TOPOCK GROUNDWATER REMEDIATION PROJECT

INTERSECTION DETAILS

GAS TRANSMISSION & DISTRIBUTION
PACIFIC GAS AND ELECTRIC COMPANY
SAN FRANCISCO, CALIFORNIA

MICROFILM
BILL OF MATL
DWG LIST
SUPSDS
SUPSD BY
SHEET NO. of SHEETS

C-07-112 | REV 2

N1808

11/02/2015, 15:18, G:\Graphics\ARTOPOCK-01\Submittal_100%\DWGs\C-Civil\C-07-108 to 122_PipeTrenchDetails.dwg, Tab: C-07-112

NOTES:
1. PIPE SUPPORTS AND CLEANOUTS NOT SHOWN FOR CLARITY.
2. ALL COVERS SHALL BE TRAFFIC RATED.

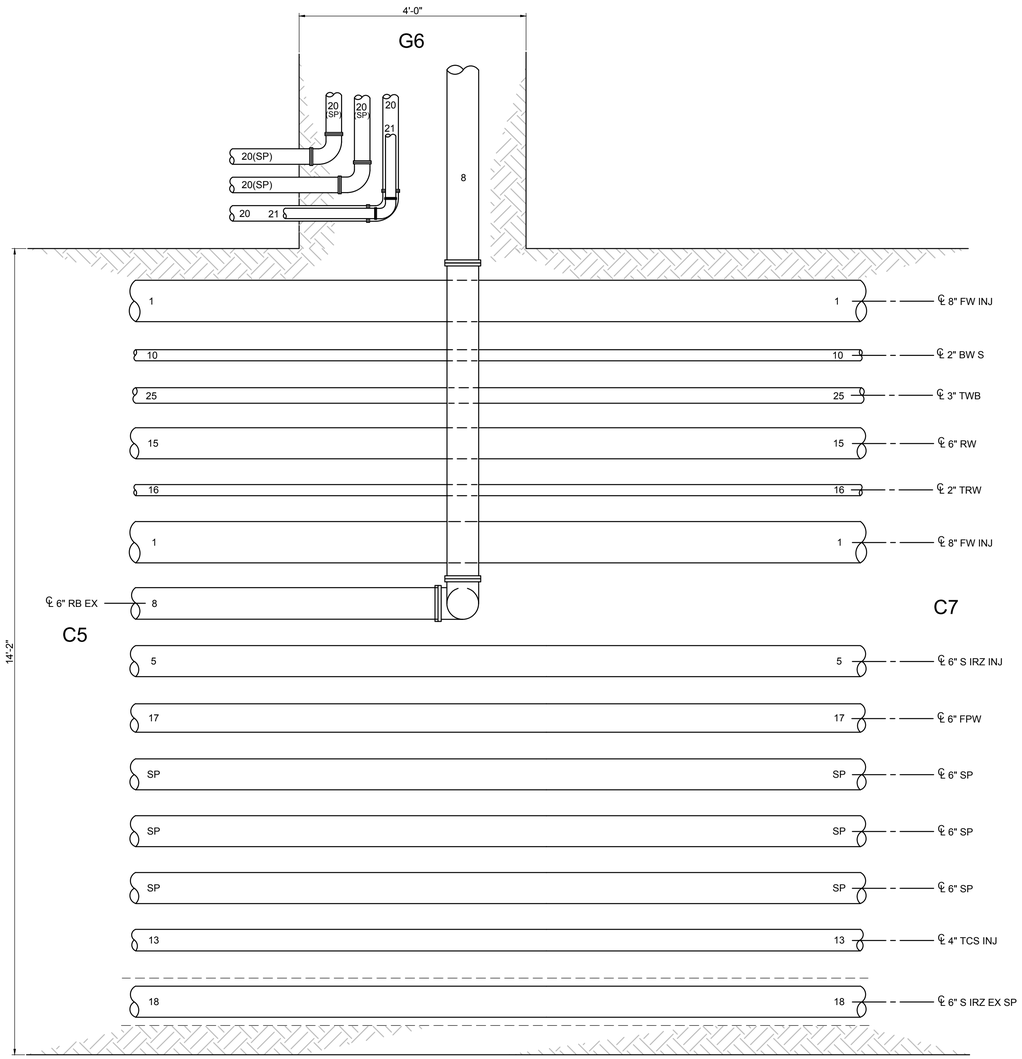

4 DETAIL
3/4"=1'-0"
C-07-43

- FINAL DESIGN - FOR AGENCY APPROVAL ONLY

REGISTERED PROFESSIONAL ENGINEER
BENJAMIN J. WUERL
C 67811
EXP 6/30/17
STATE OF CALIFORNIA

ETIC ENGINEERING

ARCADIS

NO.	DATE	DESCRIPTION	GM/SPEC	DWN	CHKD	SUPV	APVD BY
2	11/18/15	FINAL DESIGN		AJW	WLM	BW	RAO
1	9/8/14	PRE-FINAL (90%) DESIGN		AJW	BAS	JPB	JEF
0	4/5/13	INTERMEDIATE (60%) DESIGN		AJW	KLD	JPB	JEF

REVISIONS

APPROVED BY	
	SO
	SUPV
RAO	DSGN
	DWN
	CHKD
	OK
	DATE
	SCALES

TOPOCK GROUNDWATER REMEDIATION PROJECT

INTERSECTION DETAILS

GAS TRANSMISSION & DISTRIBUTION
PACIFIC GAS AND ELECTRIC COMPANY
SAN FRANCISCO, CALIFORNIA

MICROFILM	
BILL OF MATL	
DWG LIST	
SUPSDS	
SUPSD BY	
SHEET NO. of SHEETS	
C-07-113	REV 2

N1808

11/02/2015, 15:18, G:\Graphics\ART\TOPOCX-01\Submittal_100%\DWGs\C-Civil\C-[07-108 to 122_PipeTrenchDetails.dwg, Tab: C-07-113

NOTES:

1. PIPE SUPPORTS AND CLEANOUTS NOT SHOWN FOR CLARITY.
2. ALL COVERS SHALL BE TRAFFIC RATED.

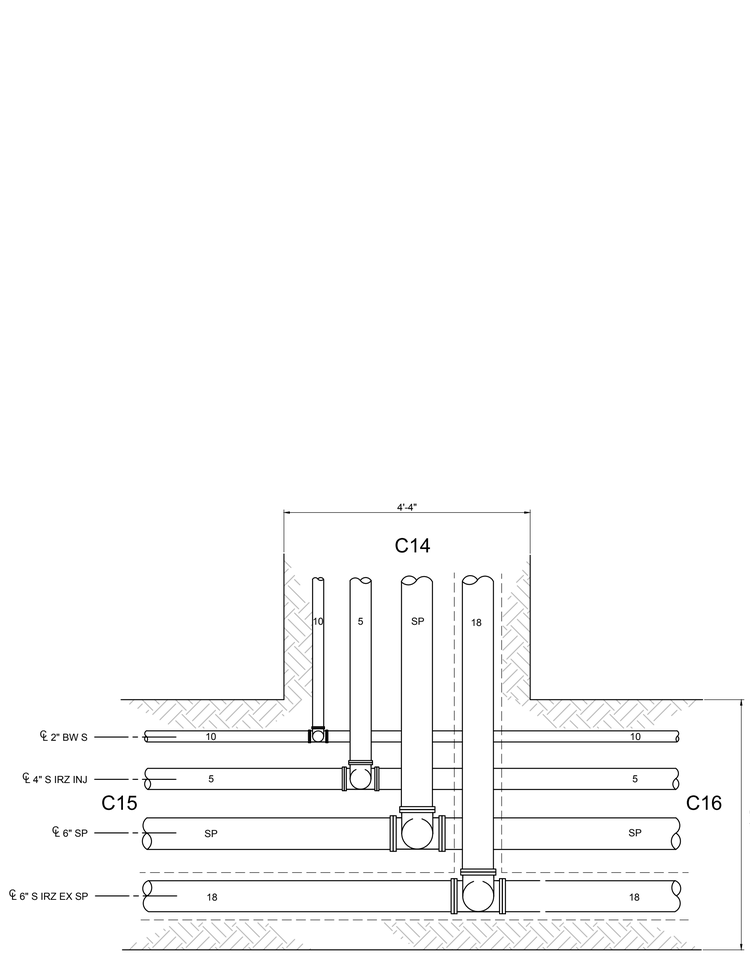

5 DETAIL
3/4"=1'-0"
C-07-49,-50

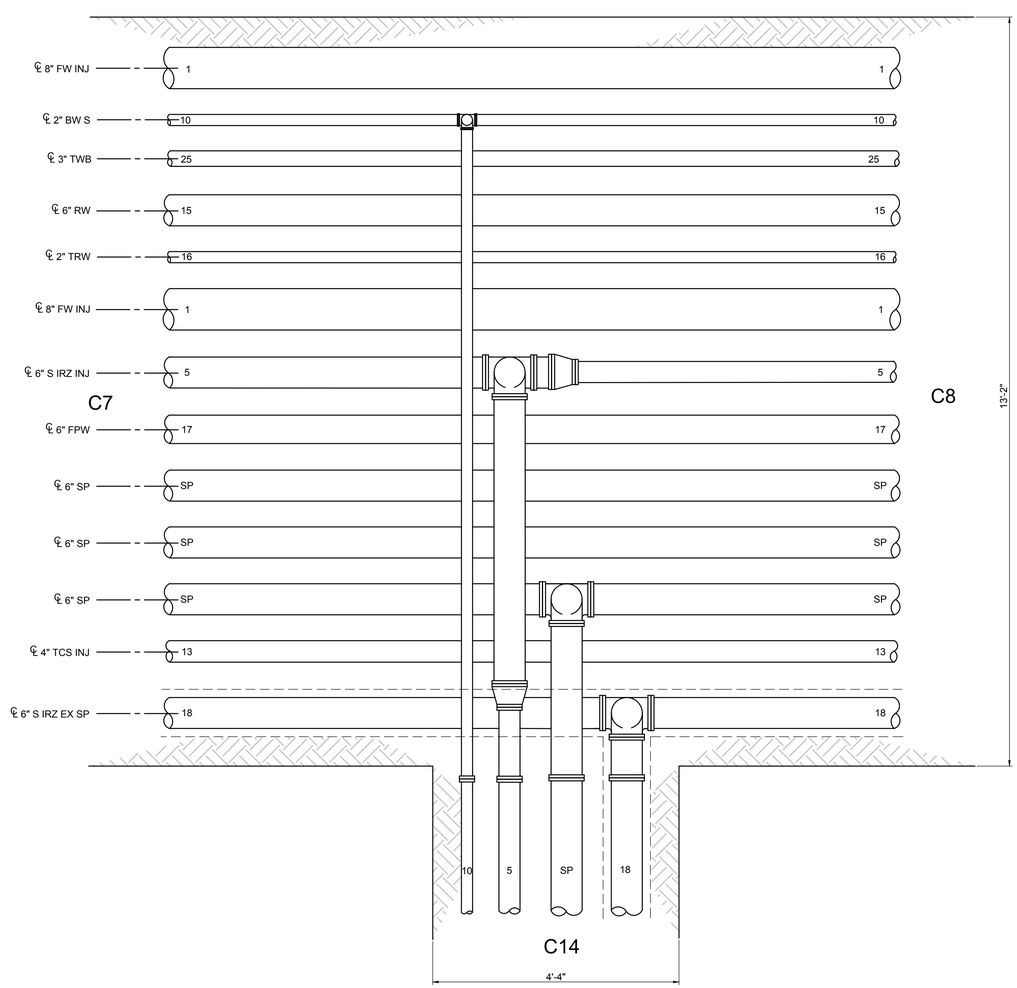

6 DETAIL
3/4"=1'-0"
C-07-44,-49

- FINAL DESIGN - FOR AGENCY APPROVAL ONLY

REGISTERED PROFESSIONAL ENGINEER
BENJAMIN J. WUERL
C 67811
EXP 6/30/17
STATE OF CALIFORNIA

ETIC ENGINEERING

ARCADIS

NO.	DATE	DESCRIPTION	GM/SPEC	DWN	CHKD	SUPV	APVD BY
2	11/18/15	FINAL DESIGN		AJW	WLM	BW	RAO
1	9/8/14	PRE-FINAL (90%) DESIGN		AJW	BAS	JPB	JEF
0	4/5/13	INTERMEDIATE (60%) DESIGN		AJW	KLD	JPB	JEF

REVISIONS

APPROVED BY	RAO
SO	
SUPV	
DSGN	
DWN	
CHKD	
OK	
DATE	
SCALES	

TOPOCK GROUNDWATER REMEDIATION PROJECT

INTERSECTION DETAILS

GAS TRANSMISSION & DISTRIBUTION
PACIFIC GAS AND ELECTRIC COMPANY
SAN FRANCISCO, CALIFORNIA

MICROFILM	
BILL OF MATL	
DWG LIST	
SUPSDS	
SUPSD BY	
SHEET NO.	of SHEETS
C-07-114	REV 2

N1808

11/02/2015, 15:18, G:\Graphics\ART\TOPOCK\C-001Submittal_100%\DWGs\C-Civil\C-[07-108 to 122_PipeTrenchDetails.dwg, Tab: C-07-114

NOTES:

1. PIPE SUPPORTS AND CLEANOUTS NOT SHOWN FOR CLARITY.
2. ALL COVERS SHALL BE TRAFFIC RATED.

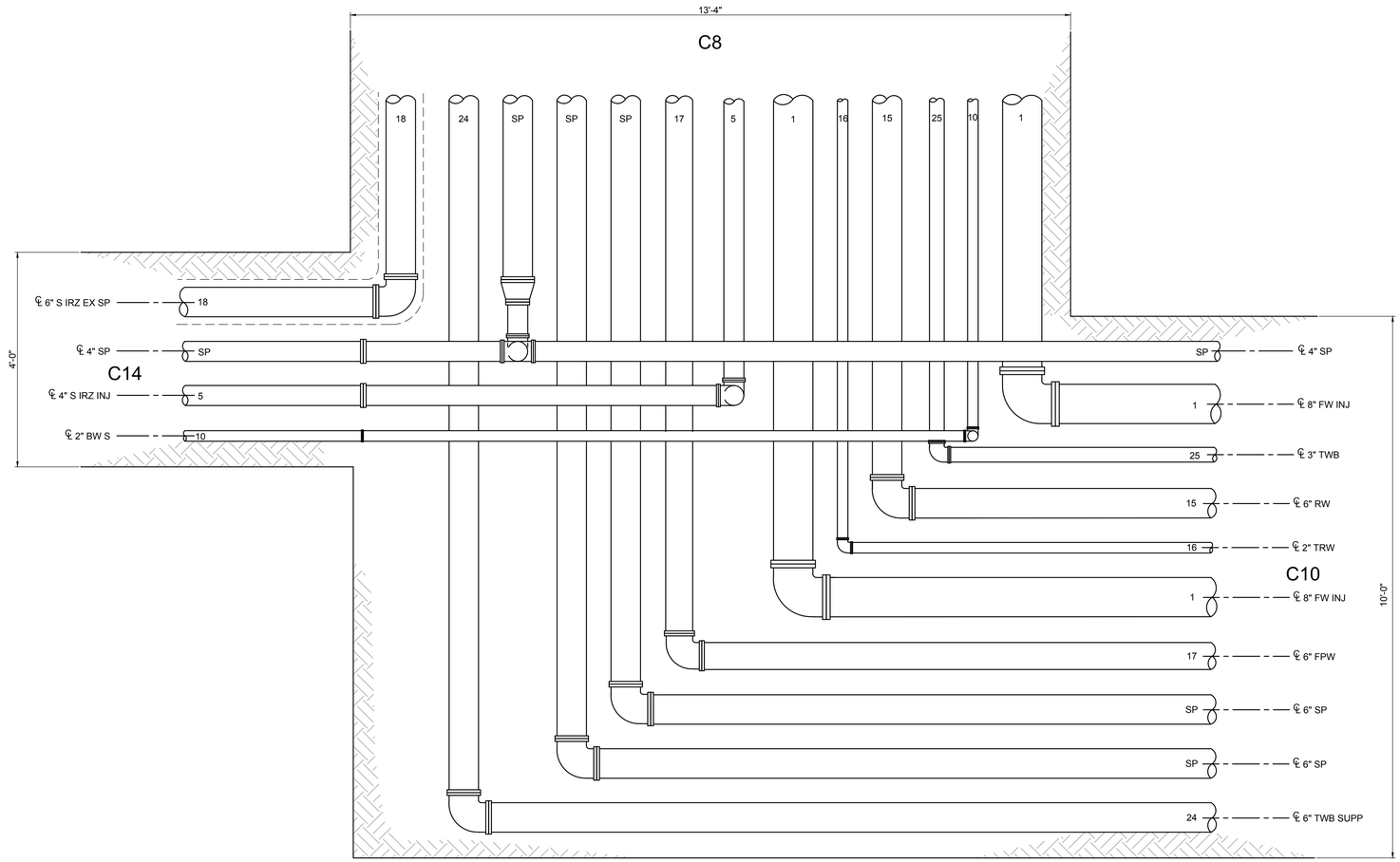

7 DETAIL
3/4"=1'-0"

C-07-46
C-07-47
C-07-51

- FINAL DESIGN -
FOR AGENCY
APPROVAL ONLY

REGISTERED PROFESSIONAL ENGINEER
BENJAMIN J. WUSEL
C 67811
EXP 6/30/17
STATE OF CALIFORNIA

ETIC ENGINEERING

ARCADIS

NO.	DATE	DESCRIPTION	GM/SPEC	DWN	CHKD	SUPV	APVD BY
2	11/18/15	FINAL DESIGN	AJW	WLM	BW	RAO	
1	9/8/14	PRE-FINAL (90%) DESIGN	AJW	BAS	JPB	JEF	
0	4/5/13	INTERMEDIATE (60%) DESIGN	AJW	KLD	JPB	JEF	

REVISIONS

APPROVED BY	
RAO	SO
	SUPV
	DSGN
	DWN
	CHKD
	OK
	DATE
	SCALES

TOPOCK GROUNDWATER REMEDIATION PROJECT

INTERSECTION DETAILS

GAS TRANSMISSION & DISTRIBUTION
PACIFIC GAS AND ELECTRIC COMPANY
SAN FRANCISCO, CALIFORNIA

MICROFILM	
BILL OF MATL	
DWG LIST	
SUPSDS	
SUPSD BY	
SHEET NO. of SHEETS	
C-07-115	REV 2

N1808

11/02/2015, 15:19, G:\Graphics\ARTOPOCK-01\Submittal_100%\DWG\eC-Civil\C-07-108 to 122_PipeTrench\Details.dwg, Tab: C-07-115

NOTES:
1. PIPE SUPPORTS AND CLEANOUTS NOT SHOWN FOR CLARITY.
2. ALL COVERS SHALL BE TRAFFIC RATED.

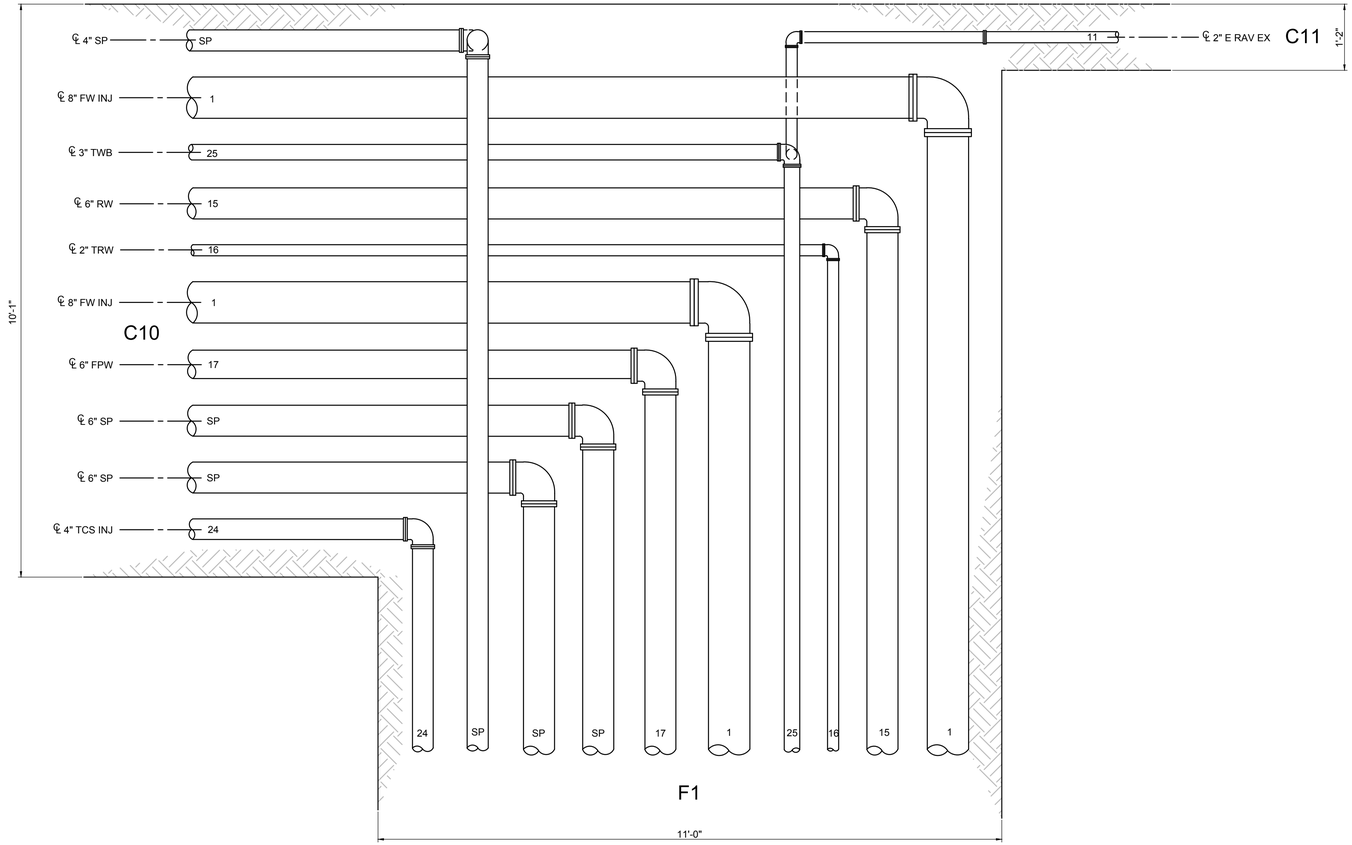

8 DETAIL
3/4"=1-0"
C-07-47
C-07-52

- FINAL DESIGN - FOR AGENCY APPROVAL ONLY

REGISTERED PROFESSIONAL ENGINEER
BENJAMIN J. WUERL
C 67811
EXP 6/30/17
CIVIL
STATE OF CALIFORNIA

ETIC ENGINEERING

ARCADIS

NO.	DATE	DESCRIPTION	GM/SPEC	DWN	CHKD	SUPV	APVD BY
2	11/18/15	FINAL DESIGN		AJW	WLM	BW	RAO
1	9/8/14	PRE-FINAL (90%) DESIGN		AJW	BAS	JPB	JEF
0	4/5/13	INTERMEDIATE (60%) DESIGN		AJW	KLD	JPB	JEF

REVISIONS

APPROVED BY	RAO
SO	
SUPV	
DSGN	
DWN	
CHKD	
OK	
DATE	
SCALES	

TOPOCK GROUNDWATER REMEDIATION PROJECT

INTERSECTION DETAILS

GAS TRANSMISSION & DISTRIBUTION
PACIFIC GAS AND ELECTRIC COMPANY
SAN FRANCISCO, CALIFORNIA

MICROFILM	
BILL OF MATL	
DWG LIST	
SUPSDS	
SUPSD BY	
SHEET NO.	of SHEETS
C-07-116	REV 2

N1808

11/02/2015, 15:19, G:\Graphics\ARIITOPOCK.01\Submittal_100%\DWGs\C-Civil\C-07-108 to 122_PipeTrenchDetails.dwg, Tab: C-07-116

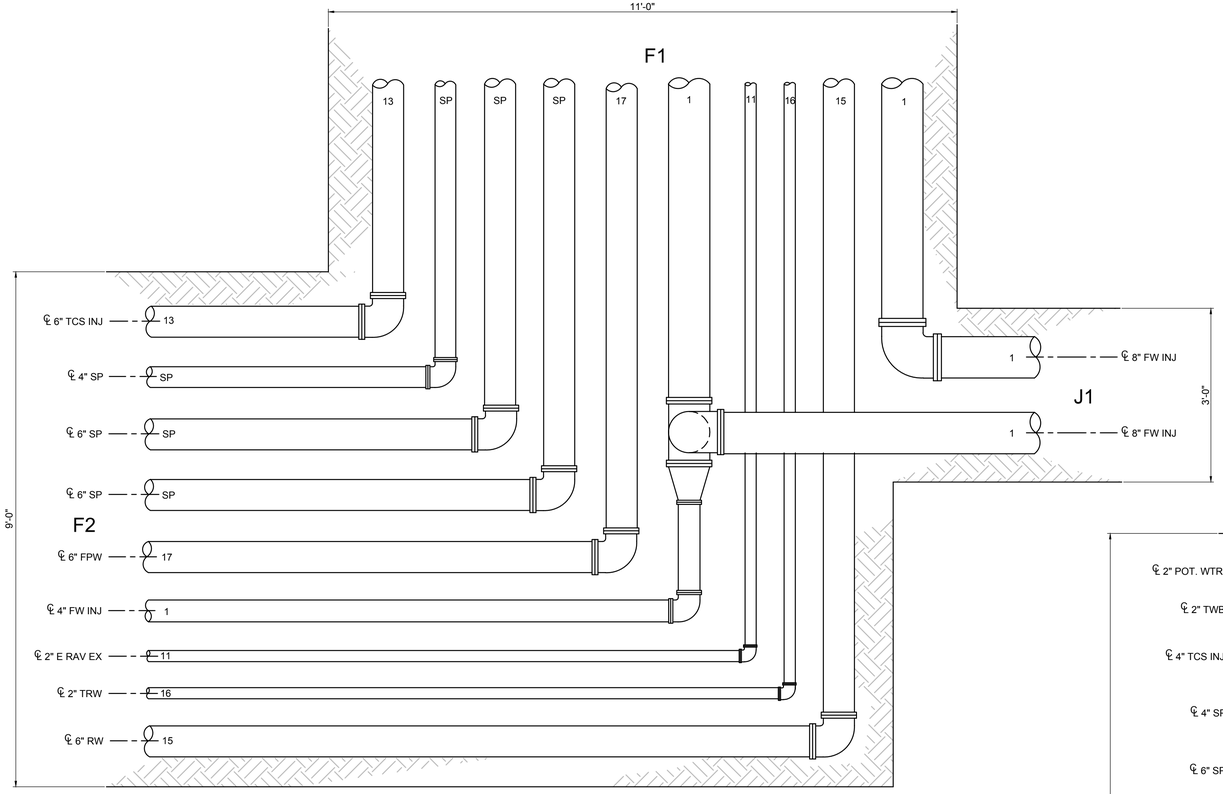

9 DETAIL
3/4"=1'-0"
C-07-52

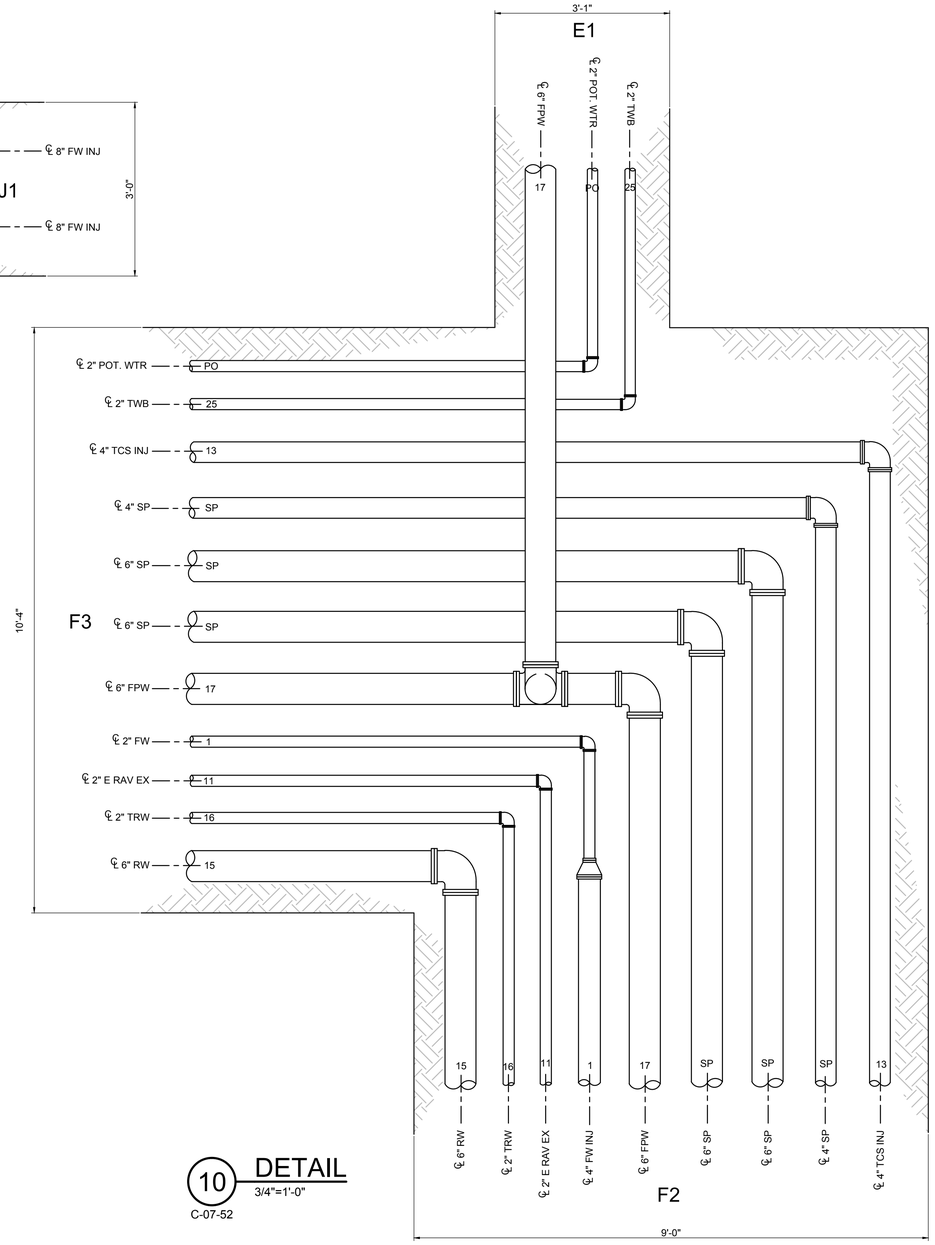

10 DETAIL
3/4"=1'-0"
C-07-52

NOTES:
1. PIPE SUPPORTS AND CLEANOUTS NOT SHOWN FOR CLARITY.
2. ALL COVERS SHALL BE TRAFFIC RATED.
3. CASING SPACERS NOT SHOWN FOR CLARITY.

- FINAL DESIGN - FOR AGENCY APPROVAL ONLY

REGISTERED PROFESSIONAL ENGINEER BENJAMIN J. WURL C 67811 EXP 6/30/17 STATE OF CALIFORNIA

ETIC ENGINEERING

ARCADIS

NO.	DATE	DESCRIPTION	GM/SPEC	DWN	CHKD	SUPV	APVD BY
2	11/18/15	FINAL DESIGN		AJW	WLM	BW	RAO
1	9/8/14	PRE-FINAL (90%) DESIGN		AJW	BAS	JPB	JEF
0	4/5/13	INTERMEDIATE (60%) DESIGN		AJW	KLD	JPB	JEF

REVISIONS

APPROVED BY: RAO

SO | SUPV | DSGN | DWN | CHKD | OK | DATE | SCALES

TOPOCK GROUNDWATER REMEDIATION PROJECT

INTERSECTION DETAILS

GAS TRANSMISSION & DISTRIBUTION
PACIFIC GAS AND ELECTRIC COMPANY
SAN FRANCISCO, CALIFORNIA

MICROFILM | BILL OF MATL | DWG LIST | SUPSDS | SUPSD BY

SHEET NO. C-07-117 of SHEETS | REV 2

N1608

11/02/2015, 15:19, G:\Graphics\AR\TOPOCK-01\Submittal_100%\DWGs\C-Civil\C-07-108 to 122_PipeTrenchDetails.dwg, Tab: C-07-117

NOTES:

1. PIPE SUPPORTS AND CLEANOUTS NOT SHOWN FOR CLARITY.
2. ALL COVERS SHALL BE TRAFFIC RATED.
3. CASING SPACERS NOT SHOWN FOR CLARITY.

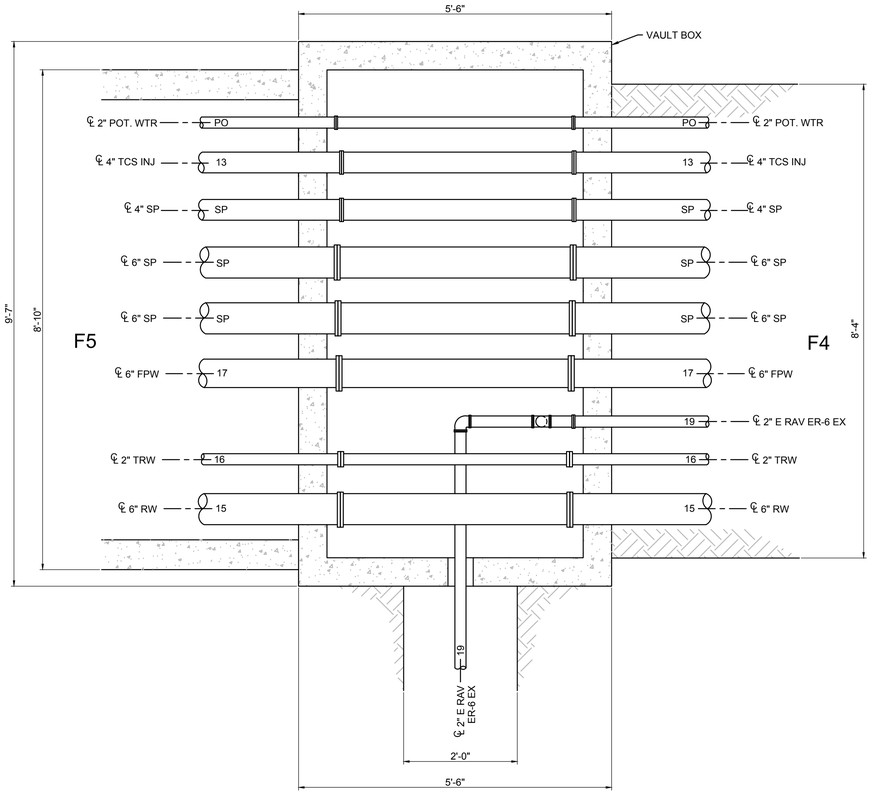

11 DETAIL
3/4"=1'-0"
C-07-52, -59

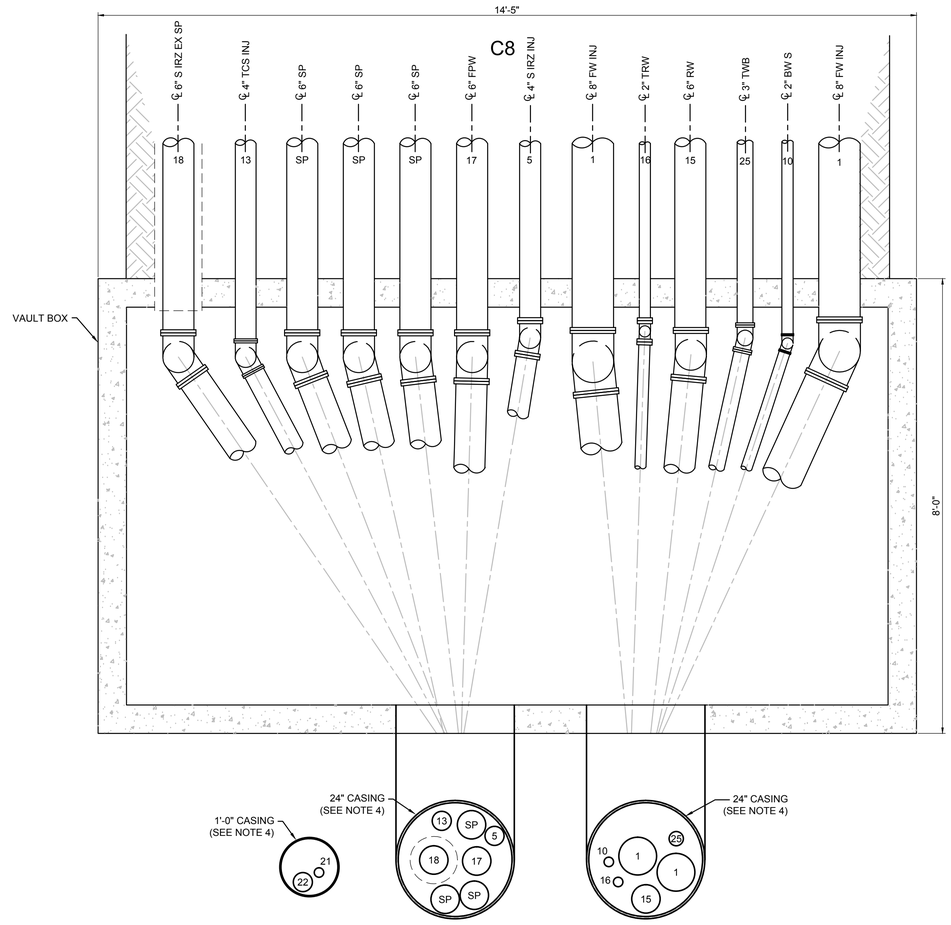

12 DETAIL
3/4"=1'-0"
C-07-46

- FINAL DESIGN -
FOR AGENCY
APPROVAL ONLY

REGISTERED PROFESSIONAL ENGINEER
BENJAMIN J. WUERL
C 67811
EXP. 6/30/17
STATE OF CALIFORNIA

ETIC ENGINEERING

ARCADIS

NO.	DATE	DESCRIPTION	GM/SPEC	DWN	CHKD	SUPV	APVD BY
2	11/18/15	FINAL DESIGN		AJW	WLM	BW	RAO
1	9/8/14	PRE-FINAL (90%) DESIGN		AJW	BAS	JPB	JEF
0	4/5/13	INTERMEDIATE (60%) DESIGN		AJW	KLD	JPB	JEF

REVISIONS

APPROVED BY: RAO

SO / SUPV / DSGN / DWN / CHKD / OK / DATE / SCALES

TOPOCK GROUNDWATER REMEDIATION PROJECT

INTERSECTION DETAILS

GAS TRANSMISSION & DISTRIBUTION
PACIFIC GAS AND ELECTRIC COMPANY
SAN FRANCISCO, CALIFORNIA

MICROFILM
BILL OF MATL
DWG LIST
SUPSDS
SUPSD BY
SHEET NO. of SHEETS
C-07-118
REV 2

11/02/2015, 15:19, G:\Graphics\AR\TOPOCK-01\Submittal_100%\DWGs\C-Civil\C-07-108 to 122_PipeTrenchDetails.dwg, Tab: C-07-118

N1808

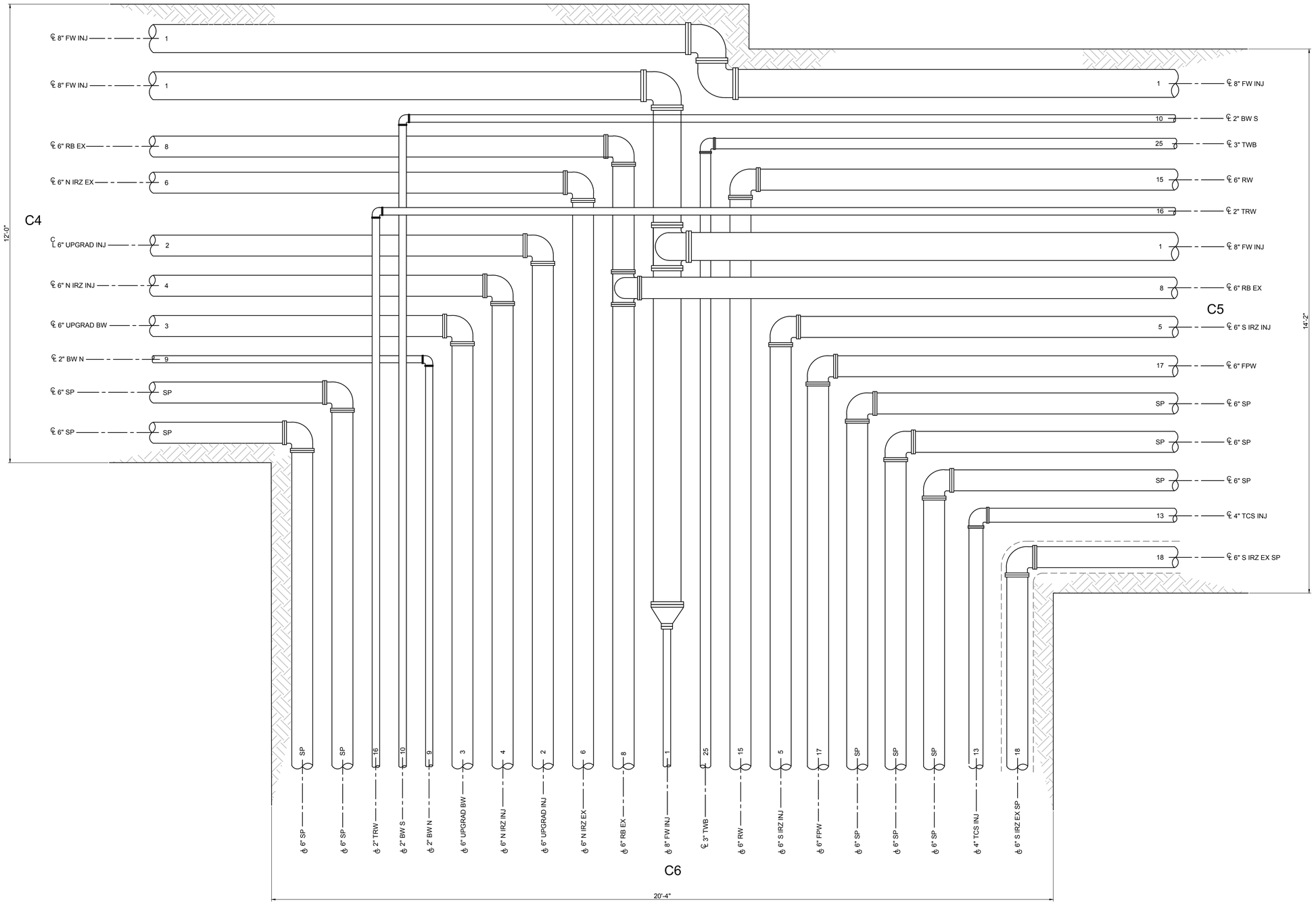

NOTES:

1. PIPE SUPPORTS AND CLEANOUTS NOT SHOWN FOR CLARITY.
2. ALL COVERS SHALL BE TRAFFIC RATED.

13 DETAIL
3/4"=1'-0"
C-07-41, -52

- FINAL DESIGN - FOR AGENCY APPROVAL ONLY

REGISTERED PROFESSIONAL ENGINEER BENJAMIN J. WUEST C 67811 EXP 6/30/17 STATE OF CALIFORNIA

ETIC ENGINEERING

ARCADIS

NO.	DATE	DESCRIPTION	GM/SPEC	DWN	CHKD	SUPV	APVD BY
2	11/18/15	FINAL DESIGN	AJW	WLM	BW	RAO	
1	9/8/14	PRE-FINAL (90%) DESIGN	AJW	BAS	JPB	JEF	
0	4/5/13	INTERMEDIATE (60%) DESIGN	AJW	KLD	JPB	JEF	

REVISIONS

APPROVED BY	
RAO	SO
	SUPV
	DSGN
	DWN
	CHKD
	OK
	DATE
	SCALES

TOPOCK GROUNDWATER REMEDIATION PROJECT

INTERSECTION DETAILS

GAS TRANSMISSION & DISTRIBUTION
PACIFIC GAS AND ELECTRIC COMPANY
SAN FRANCISCO, CALIFORNIA

MICROFILM	
BILL OF MATL	
DWG LIST	
SUPSDS	
SUPSD BY	
SHEET NO. of	SHEETS
C-07-119	REV 2

N1808

11/02/2015, 15:19, G:\Graphics\ARTOPOCK-01\Submittal_100%\DWGs\C-Civil\C-07-108 to 122_PipeTrenchDetails.dwg, Tab: C-07-119

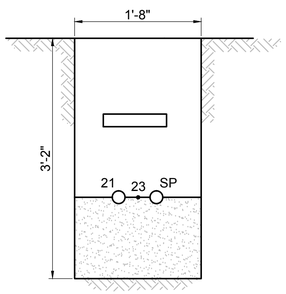

P1-1 P1-2 SECTION 1"=1'-0"
C-07-52

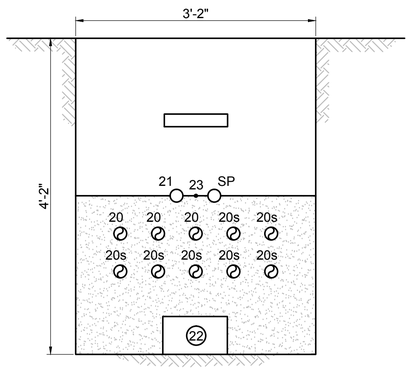

P1-3 P1-4 SECTION 1"=1'-0"
C-07-52

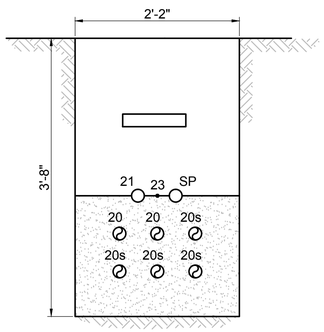

P1-5 P1-6 SECTION 1"=1'-0"
C-07-47

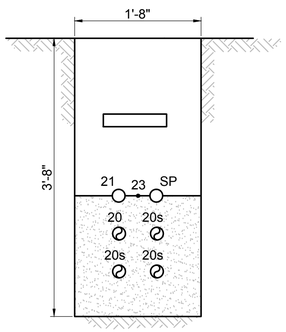

P1-7 P1-8 P1-9 P1-10 SECTION 1"=1'-0"
C-07-48

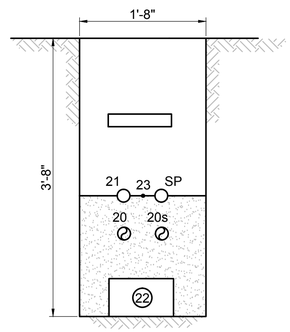

P1-11 P1-12 P1-13 P1-14 SECTION 1"=1'-0"
C-07-52

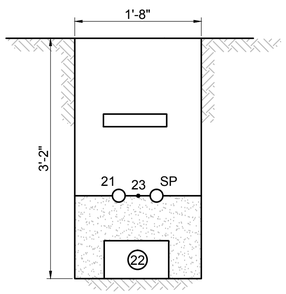

P1-15 P1-17 P1-18 P1-19 SECTION 1"=1'-0"
C-07-44,45,46

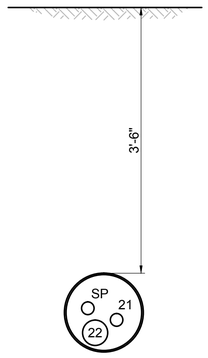

P1-16 SECTION 1"=1'-0"
C-07-46

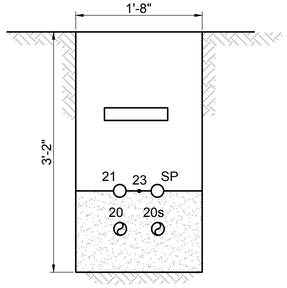

P1-20 P1-21 SECTION 1"=1'-0"
C-07-52

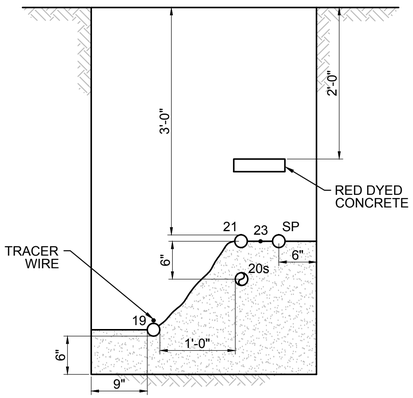

P1-22 P1-23 P1-24 P1-25 SECTION 1"=1'-0"
C-07-59

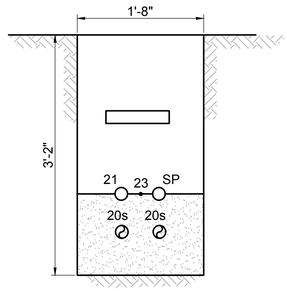

P1-26 SECTION 1"=1'-0"
C-07-48

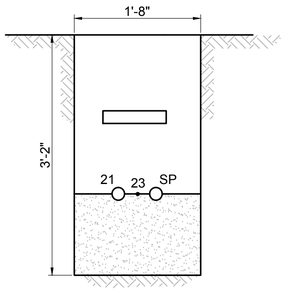

P1-27 SECTION 1"=1'-0"
C-07-52

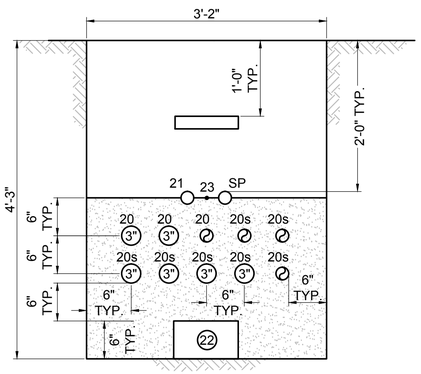

P2-1 P2-2 SECTION 1"=1'-0"
C-07-50

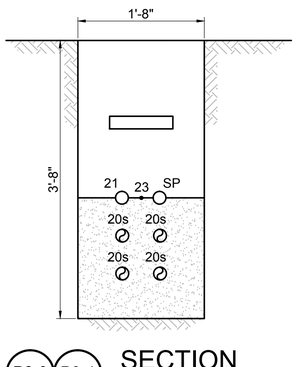

P2-3 P2-4 SECTION 1"=1'-0"
C-07-50

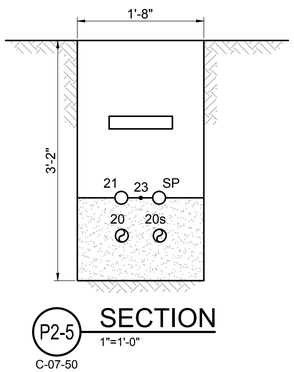

P2-5 SECTION 1"=1'-0"
C-07-50

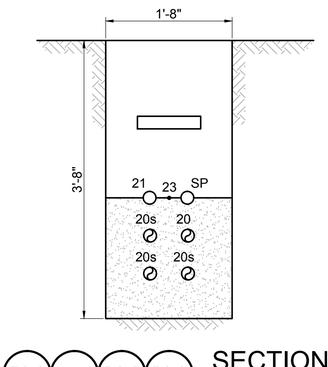

P2-6 P2-7 P2-8 P2-9 SECTION 1"=1'-0"
C-07-50

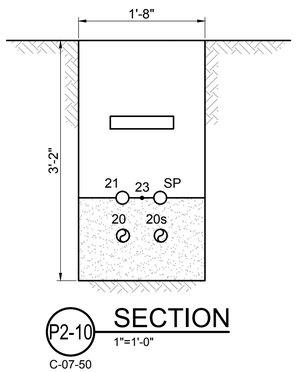

P2-10 SECTION 1"=1'-0"
C-07-50

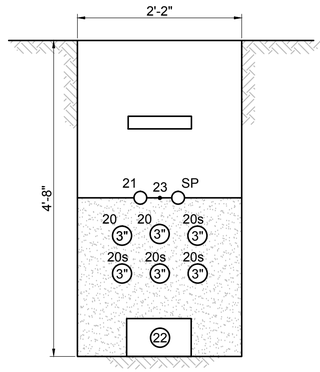

P2-11 P2-12 P2-13 SECTION 1"=1'-0"
C-07-44, 49

NOTES:
1. SEE CONDUIT AND CABLE SCHEDULES AND SINGLE LINE DIAGRAMS ON SHEETS E-00-05 THRU E-00-13.
2. BEDDING SHALL EXTEND HALF WAY UP TOP CONDUIT PER THE SPECIFICATIONS.

- FINAL DESIGN - FOR AGENCY APPROVAL ONLY

REGISTERED PROFESSIONAL ENGINEER BENJAMIN J. WUEBEL C 67811 EXP 6/30/17 STATE OF CALIFORNIA

ETIC ENGINEERING

ARCADIS

NO.	DATE	DESCRIPTION	GM/SPEC	DWN	CHKD	SUPV	APVD BY
2	11/18/15	FINAL DESIGN		AJW	WLM	BW	RAO
1	9/8/14	PRE-FINAL (90%) DESIGN		AJW	BAS	JPB	JEF
0	4/5/13	INTERMEDIATE (60%) DESIGN		AJW	KLD	JPB	JEF

REVISIONS

APPROVED BY	
RAO	

SO	
SUPV	
DSGN	
DWN	
CHKD	
OK	
DATE	
SCALES	

TOPOCK GROUNDWATER REMEDIATION PROJECT

INTERSECTION DETAILS

GAS TRANSMISSION & DISTRIBUTION
PACIFIC GAS AND ELECTRIC COMPANY
SAN FRANCISCO, CALIFORNIA

MICROFILM	
BILL OF MATL	
DWG LIST	
SUPSDS	
SUPSD BY	
SHEET NO. of SHEETS	
C-07-120	REV 2

N1808

11/02/2015, 15:20, G:\Graphics\ARTOTOPOCK-01\Submittal_100%\DWGs\C-Civil\C-[7-108 to 122_PipeTrenchDetails.dwg, Tab: C-07-120

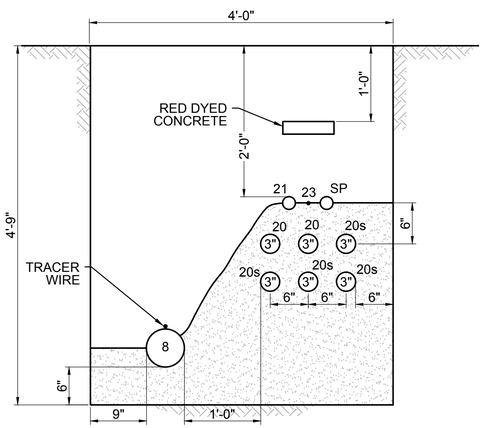

P2-14 P2-15 P2-16 P2-17 **SECTION** 1"=1'-0"

C-07-58

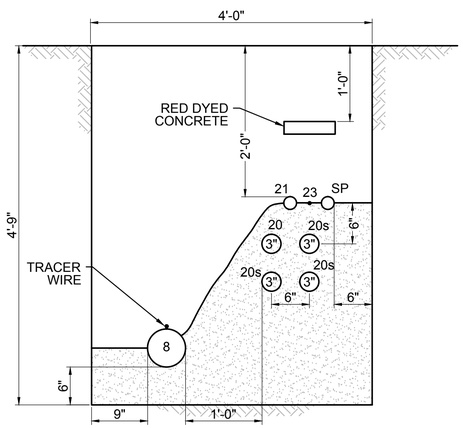

P2-18 P2-19 **SECTION** 1"=1'-0"

C-07-56, 57

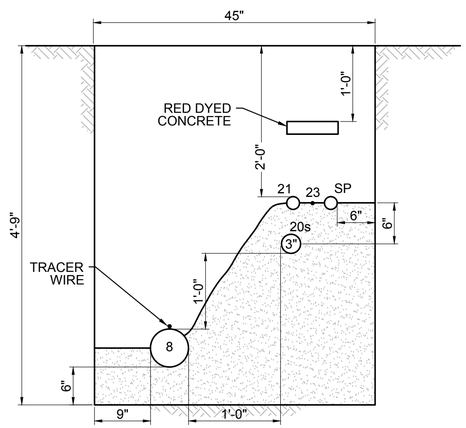

P2-20 **SECTION** 1"=1'-0"

C-07-56

NOTES:
1. SEE CONDUIT AND CABLE SCHEDULES AND SINGLE LINE DIAGRAMS ON SHEETS E-00-05 THRU E-00-13.
2. BEDDING SHALL EXTEND HALF WAY UP TOP CONDUIT PER THE SPECIFICATIONS.
3. CASING SPACERS NOT SHOWN FOR CLARITY

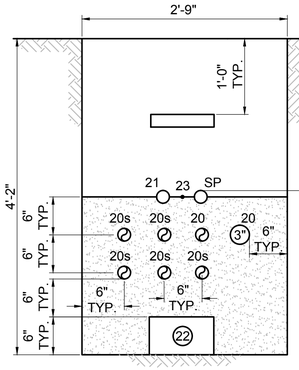

P3-1 **SECTION** 1"=1'-0"

C-07-41

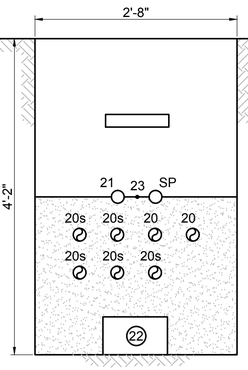

P3-2 **SECTION** 1"=1'-0"

C-07-41

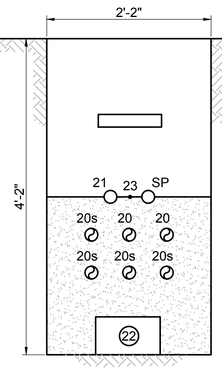

P3-3 **SECTION** 1"=1'-0"

C-07-41

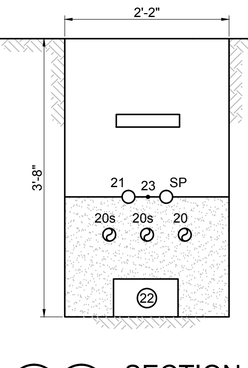

P3-4 P3-5 **SECTION** 1"=1'-0"

C-07-41

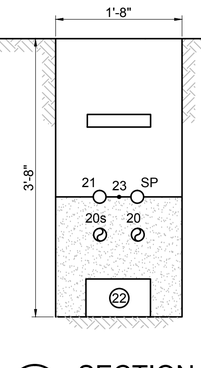

P3-6 **SECTION** 1"=1'-0"

C-07-41

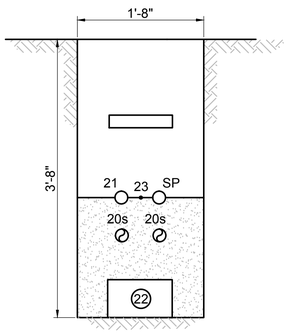

P3-7 P3-8 **SECTION** 1"=1'-0"

C-07-41

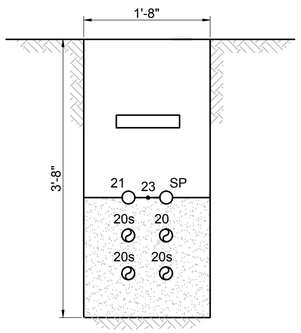

P3-10 P3-11 P3-12 **SECTION** 1"=1'-0"

C-07-42

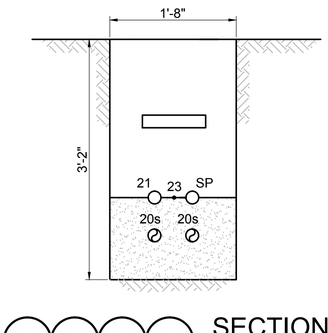

P3-13 P3-14 P3-15 P3-16 P3-17 P3-18 P3-19 **SECTION** 1"=1'-0"

C-07-42

- FINAL DESIGN - FOR AGENCY APPROVAL ONLY

REGISTERED PROFESSIONAL ENGINEER BENJAMIN J. WUERL C 67811 EXP 6/30/17 STATE OF CALIFORNIA

ETIC ENGINEERING

ARCADIS

NO.	DATE	DESCRIPTION	GM/SPEC	DWN	CHKD	SUPV	APVD BY
2	11/18/15	FINAL DESIGN		AJW	WLM	BW	RAO
1	9/8/14	PRE-FINAL (90%) DESIGN		AJW	BAS	JPB	JEF
0	4/5/13	INTERMEDIATE (60%) DESIGN		AJW	KLD	JPB	JEF

REVISIONS

APPROVED BY	
	SO
	SUPV
RAO	DSGN
	DWN
	CHKD
	OK
	DATE
	SCALES

TOPOCK GROUNDWATER REMEDIATION PROJECT

INTERSECTION DETAILS

GAS TRANSMISSION & DISTRIBUTION
PACIFIC GAS AND ELECTRIC COMPANY
SAN FRANCISCO, CALIFORNIA

MICROFILM	
BILL OF MATL	
DWG LIST	
SUPSDS	
SUPSD BY	
SHEET NO.	of SHEETS
C-07-121	REV 2

N1608

11/02/2015, 15:20, G:\Graphics\AR\TOPOCK-01\Submittal_100%\DWGs\C-Civil\C-07-108 to 122_PipeTrenchDetails.dwg, Tab: C-07-121

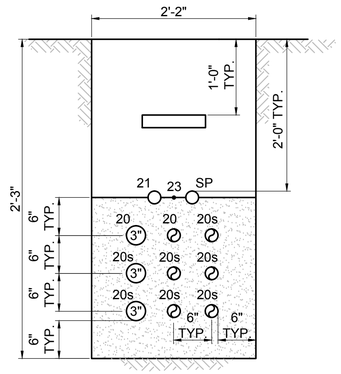

P4-1 P4-2 SECTION 1"=1'-0"

C-07-40

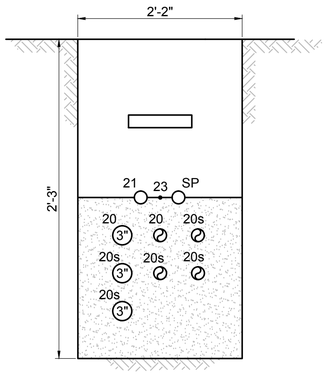

P4-3 SECTION 1"=1'-0"

C-07-39, 40

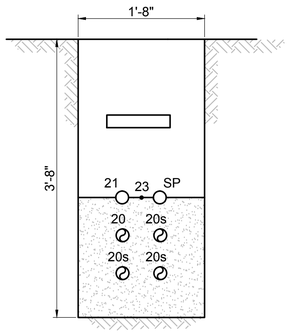

P4-4 P4-5 P4-6 P4-7 SECTION 1"=1'-0"

C-07-39

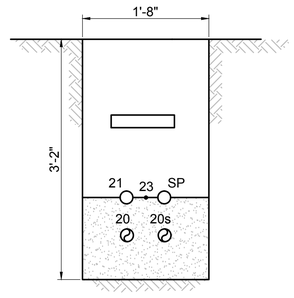

P4-8 SECTION 1"=1'-0"

C-07-39

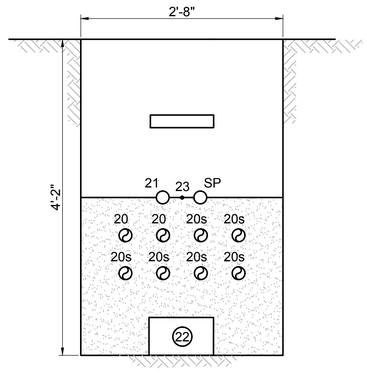

P4-9 P4-10 P4-11 SECTION 1"=1'-0"

C-07-40

NOTES:
1. SEE CONDUIT AND CABLE SCHEDULES AND SINGLE LINE DIAGRAMS ON SHEETS E-00-05 THRU E-00-13.
2. CASING SPACERS NOT SHOWN FOR CLARITY.

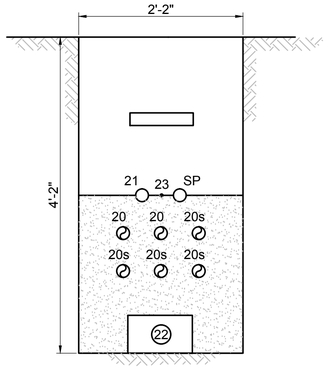

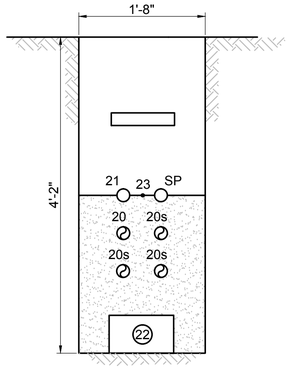

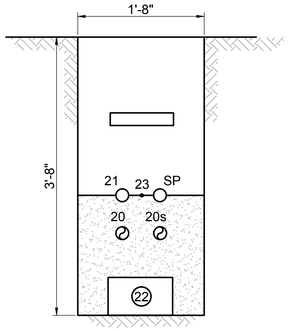

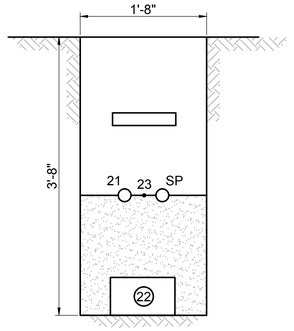

P4-12 SECTION 1"=1'-0"

C-07-40

P4-13 P4-14 P4-15 SECTION 1"=1'-0"

C-07-40, 41

P4-16 SECTION 1"=1'-0"

C-07-41

P4-17 SECTION 1"=1'-0"

C-07-41

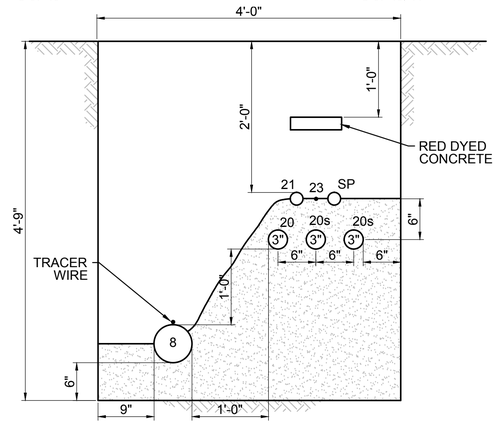

P4-18 P4-19 SECTION 1"=1'-0"

C-07-54, 55

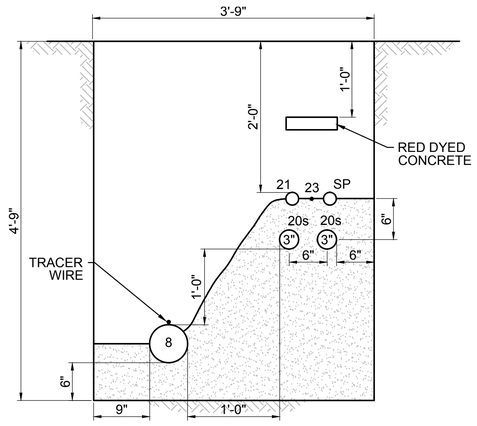

P4-20 P4-21 SECTION 1"=1'-0"

C-07-55, 56

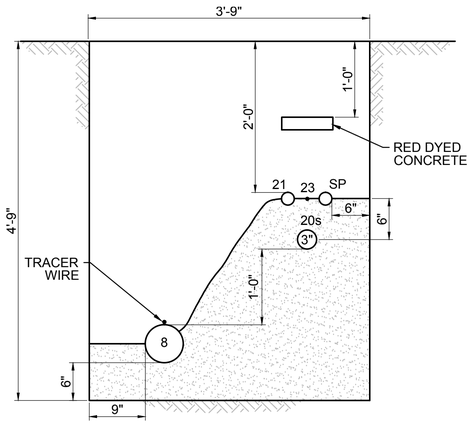

P4-22 SECTION 1"=1'-0"

C-07-56

- FINAL DESIGN - FOR AGENCY APPROVAL ONLY

REGISTERED PROFESSIONAL ENGINEER BENJAMIN J. WUERL C 67811 Exp 6/30/17 STATE OF CALIFORNIA

ETIC ENGINEERING

ARCADIS

NO.	DATE	DESCRIPTION	GM/SPEC	DWN	CHKD	SUPV	APVD BY
2	11/18/15	FINAL DESIGN		AJW	WLM	BW	RAO
1	9/8/14	PRE-FINAL (90%) DESIGN		AJW	BAS	JPB	JEF
0	4/5/13	INTERMEDIATE (60%) DESIGN		AJW	KLD	JPB	JEF

REVISIONS

APPROVED BY	
RAO	SO
	SUPV
	DSGN
	DWN
	CHKD
	OK
	DATE
	SCALES

TOPOCK GROUNDWATER REMEDIATION PROJECT

INTERSECTION DETAILS

GAS TRANSMISSION & DISTRIBUTION
PACIFIC GAS AND ELECTRIC COMPANY
SAN FRANCISCO, CALIFORNIA

MICROFILM	
BILL OF MATL	
DWG LIST	
SUPSDS	
SUPSD BY	
SHEET NO. of	SHEETS
C-07-122	REV 2

N1808

11/02/2015, 15:20, G:\Graphics\ART\TOPOCK\C-001Submittal_100%\DWGs\C-Civil\C-[07-108 to 122_PipeTrenchDetails.dwg, Tab: C-07-122

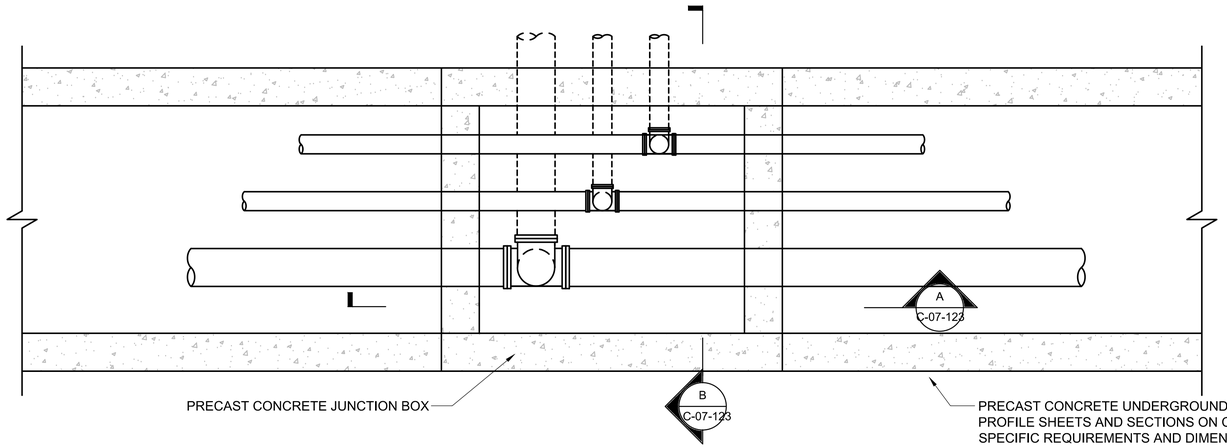

1 TYPICAL CONCRETE UTILITY TRENCH PENETRATION PLAN

1"=1'-0"

C-07-74,-75,-76,-77,-80

PIPELINE NOTES:

1. PIPELINES SHOWN ARE TYPICAL ONLY. FOR SPECIFIC REQUIREMENTS REFER TO PLAN AND PROFILE DRAWINGS.

PRECAST CONCRETE UNDERGROUND UTILITY TRENCH NOTES :

1. PRECAST CONCRETE UTILITY TRENCH AND JUNCTION BOX COMPONENTS (I.E. TOP SLAB, LIDS, WALLS, AND BASE SLAB) SHALL BE DESIGNED BY PRECAST MANUFACTURER WITH LOADING IN ACCORDANCE WITH AASHTO HS20-44 AND PER SPECIFICATION SECTION 03 40 00.
2. CONCRETE SHALL BE 5,000 P.S.I. COMPRESSIVE STRENGTH @ 28 DAYS. REINFORCING STEEL SHALL BE ASTM A-615.
3. ALL PIPING AND CONDUIT SHALL BE SECURED TO THE WALLS OR BASE SLAB OF THE CONCRETE TRENCH AND JUNCTION BOX WITH ANCHOR BOLTS, UNISTRUT, OR CONCRETE PIPE SUPPORTS. CONTRACTOR SHALL INSTALL SUPPORTS WHEREVER NECESSARY TO PROPERLY SUPPORT PIPING AND CONDUIT PER SPECIFICATION 40 05 15.
4. CONTRACTOR RESPONSIBLE FOR LOCATING AND VERIFYING LOCATION OF ALL UTILITIES LOCATED WITHIN AREAS TO BE AFFECTED BY CONSTRUCTION.
5. ALL PIPE PENETRATIONS SHALL BE LINK SEALED IN ACCORDANCE WITH SPECIFICATIONS.
6. SEE MECHANICAL DRAWINGS FOR ALL PIPE PENETRATIONS.

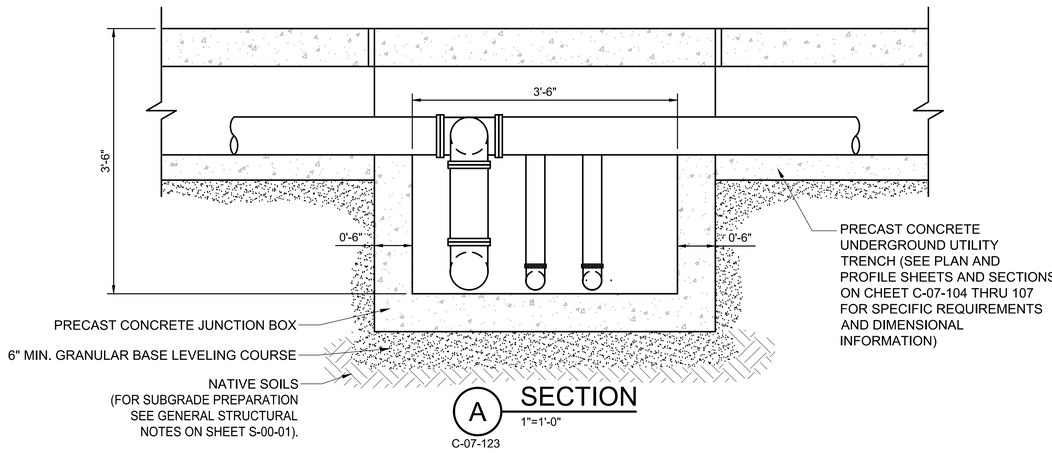

A SECTION

1"=1'-0"

C-07-123

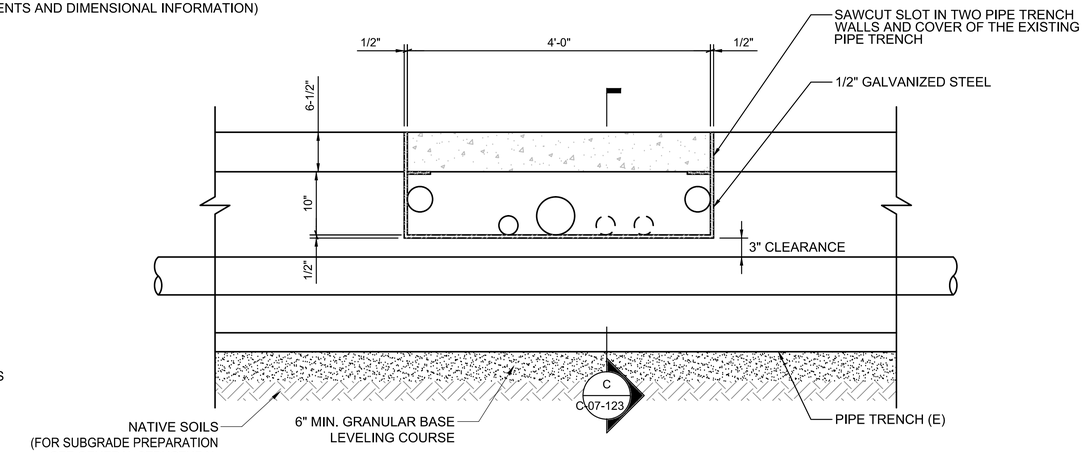

2 EXISTING PIPE TRENCH CROSSING SECTION

1"=1'-0"

C-07-49,-75

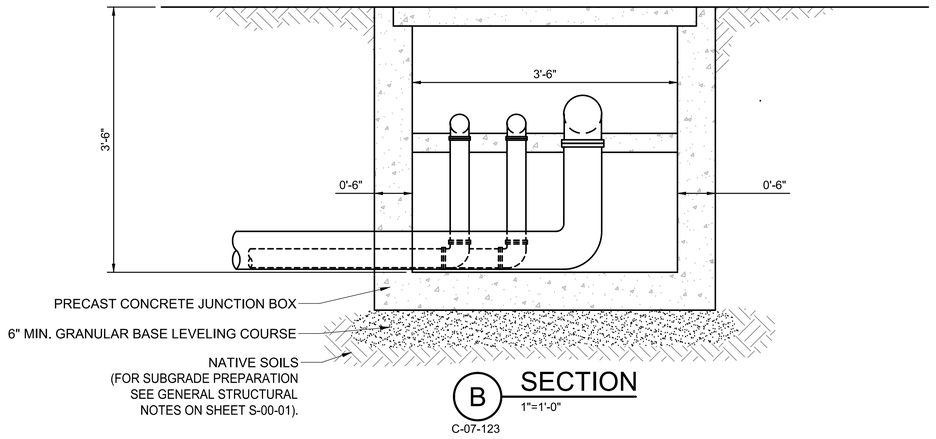

B SECTION

1"=1'-0"

C-07-123

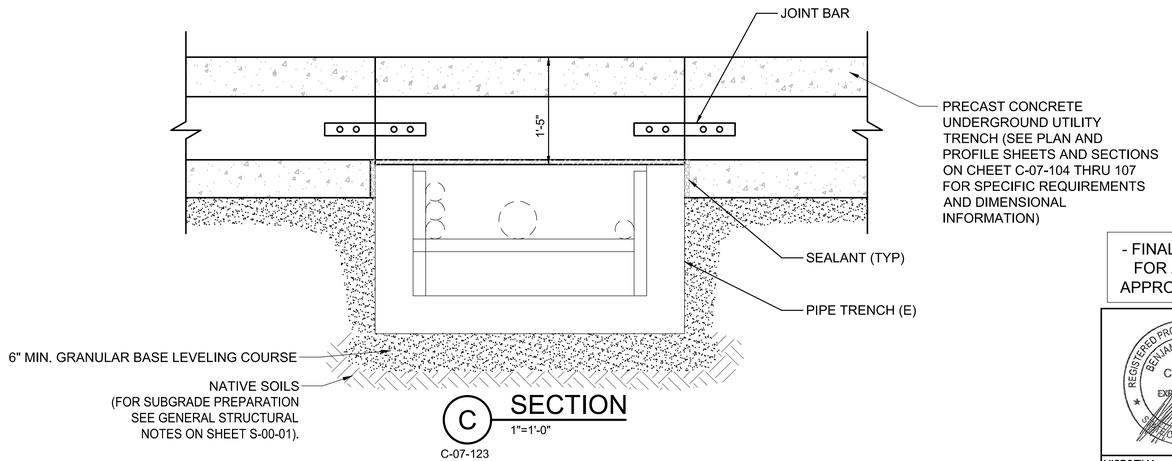

C SECTION

1"=1'-0"

C-07-123

- FINAL DESIGN - FOR AGENCY APPROVAL ONLY

REGISTERED PROFESSIONAL ENGINEER BENJAMIN J. WUERL C 67811 Exp 6/30/17 STATE OF CALIFORNIA

ETIC ENGINEERING

ARCADIS

NO.	DATE	DESCRIPTION	GM/SPEC	DWN	CHKD	SUPV	APVD BY
2	11/18/15	FINAL DESIGN		AJW	WLM	BW	RAO
1	9/8/14	PRE-FINAL (90%) DESIGN					
0	4/5/13	INTERMEDIATE (60%) DESIGN					

REVISIONS

APPROVED BY	SO
RAO	SUPV
	DSGN
	DWN
	CHKD
	OK
	DATE
	SCALES

TOPOCK GROUNDWATER REMEDIATION PROJECT

INTERSECTION DETAILS

GAS TRANSMISSION & DISTRIBUTION
PACIFIC GAS AND ELECTRIC COMPANY
SAN FRANCISCO, CALIFORNIA

MICROFILM	
BILL OF MATL	
DWG LIST	
SUPSDS	
SUPSD BY	
SHEET NO.	of SHEETS
C-07-123	REV 2

N1808

11/02/2015, 17:02, G:\Graphics\ARTOPOCK-01\Submittal_100%\DWGs\C-Civil\C-07-123.dwg, Tab: C-07-123

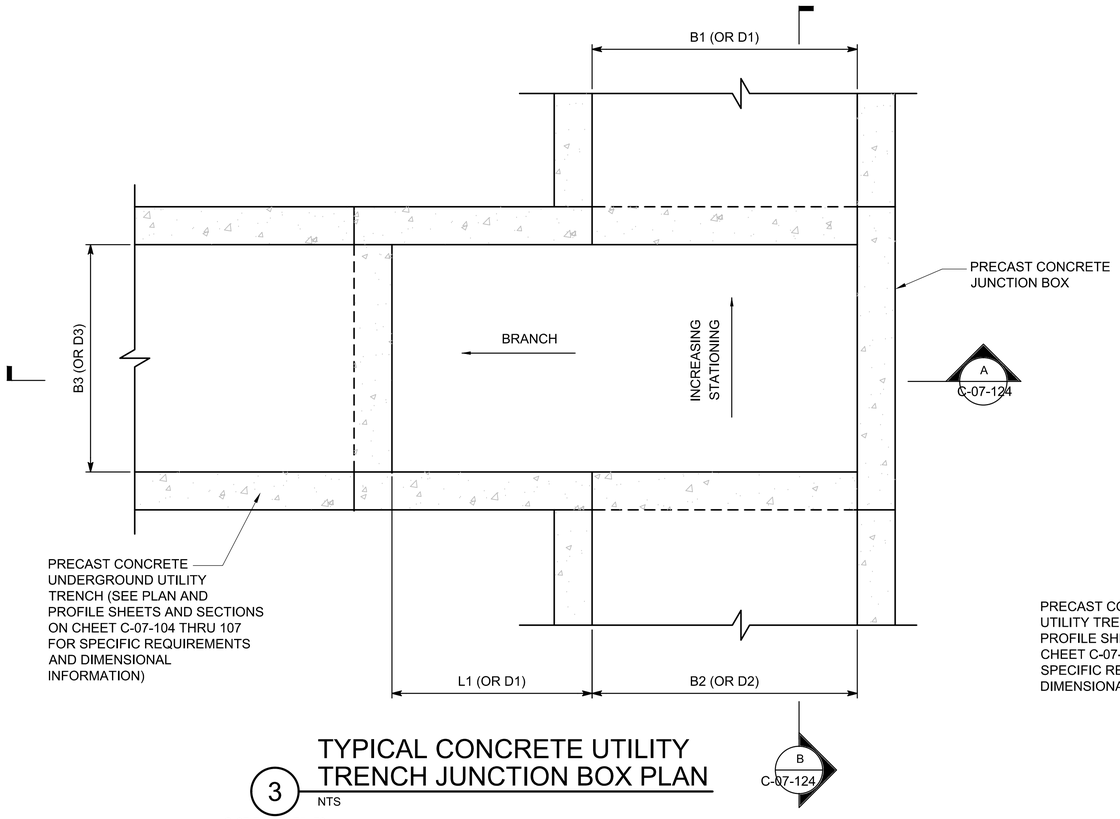

3 TYPICAL CONCRETE UTILITY TRENCH JUNCTION BOX PLAN

NTS

C-07-73,-74,-75,-79

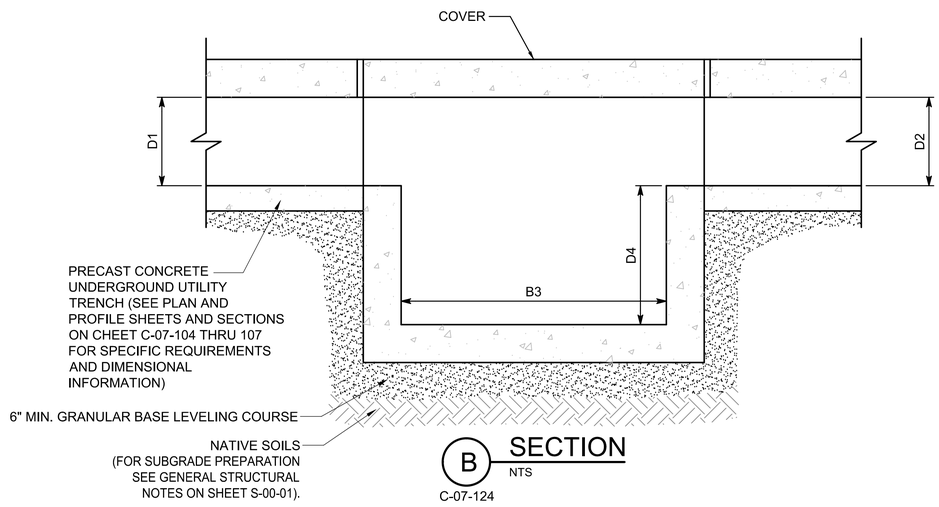

B SECTION

NTS

C-07-124

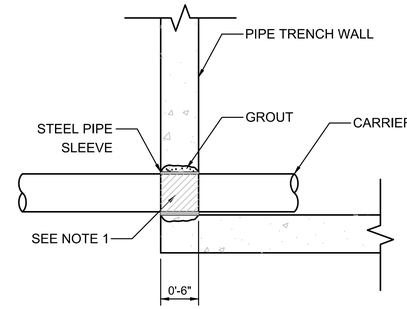

NOTES:

1. BARRIER PIPE WITH ELASTOMETRIC TAPE AND SEAL ANNULAR SPACE WITH MASTIC.

4 PIPE TRENCH WALL PENETRATION DETAIL

NTS

PRECAST CONCRETE UNDERGROUND UTILITY TRENCH NOTES :

1. PRECAST CONCRETE UTILITY TRENCH AND JUNCTION BOX COMPONENTS (I.E. TOP SLAB, LIDS, WALLS, AND BASE SLAB) SHALL BE DESIGNED BY PRECAST MANUFACTURER WITH LOADING IN ACCORDANCE WITH AASHTO HS20-44 AND PER SPECIFICATION SECTION 03 40 00.
2. CONCRETE SHALL BE 5,000 P.S.I. COMPRESSIVE STRENGTH @ 28 DAYS. REINFORCING STEEL SHALL BE ASTM A-615.
3. ALL PIPING AND CONDUIT SHALL BE SECURED TO THE WALLS OR BASE SLAB OF THE CONCRETE TRENCH AND JUNCTION BOX WITH ANCHOR BOLTS, UNISTRUT, OR CONCRETE PIPE SUPPORTS. CONTRACTOR SHALL INSTALL SUPPORTS WHEREVER NECESSARY TO PROPERLY SUPPORT PIPING AND CONDUIT PER SPECIFICATION 40 05 15.
4. CONTRACTOR RESPONSIBLE FOR LOCATING AND VERIFYING LOCATION OF ALL UTILITIES LOCATED WITHIN AREAS TO BE AFFECTED BY CONSTRUCTION.
5. ALL PIPE PENETRATIONS SHALL BE LINK SEALED IN ACCORDANCE WITH SPECIFICATIONS.
6. SEE MECHANICAL DRAWINGS FOR ALL PIPE PENETRATIONS.

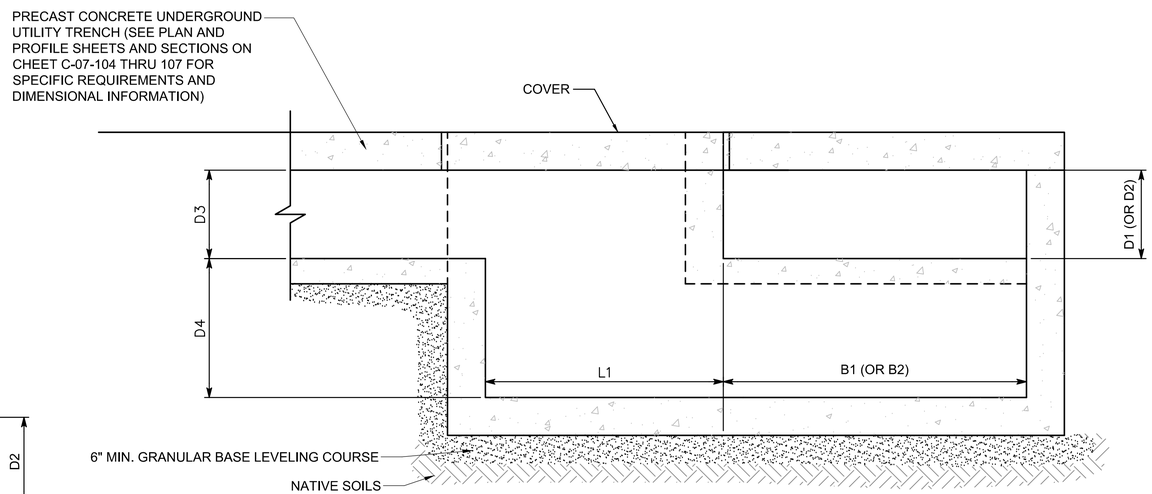

A SECTION

NTS

C-07-124

TABLE 1 JUNCTION BOXES

PJ#	B1	B2	B3	D1	D2	D3	D4	L1	ANGLE
1	5' - 0"	5' - 0"	4' - 0"	1' - 4"	1' - 4"	1' - 4"	4' - 0"	4' - 0"	90°
2	4' - 0"	4' - 0"	5' - 0"	1' - 4"	1' - 4"	1' - 4"	4' - 0"	4' - 0"	110°
3	4' - 0"	4' - 0"	4' - 0"	10"	10"	1' - 4"	4' - 0"	4' - 0"	90°
4	4' - 0"	5' - 0"	4' - 0"	10"	10"	10"	3' - 6"	4' - 0"	90°
5	-	-	-	-	-	-	-	-	-

- FINAL DESIGN - FOR AGENCY APPROVAL ONLY

REGISTERED PROFESSIONAL ENGINEER BENJAMIN J. WUERL C 67811 EXP 6/30/17 STATE OF CALIFORNIA

ETIC ENGINEERING

ARCADIS

NO.	DATE	DESCRIPTION	GM/SPEC	DWN	CHKD	SUPV	APVD BY
1	11/18/15	FINAL DESIGN		AJW	WLM	BW	RAO
0	9/8/14	PRE-FINAL (90%) DESIGN					

REVISIONS

APPROVED BY	
RAO	SO
	SUPV
	DSGN
	DWN
	CHKD
	OK
	DATE
	SCALES

TOPOCK GROUNDWATER REMEDIATION PROJECT

INTERSECTION DETAILS

GAS TRANSMISSION & DISTRIBUTION
PACIFIC GAS AND ELECTRIC COMPANY
SAN FRANCISCO, CALIFORNIA

MICROFILM	
BILL OF MATL	
DWG LIST	
SUPSDS	
SUPSD BY	
SHEET NO.	of SHEETS
C-07-124	REV 1

N1808

11/02/2015, 17:02, G:\Graphics\ARI\TOPOCK-01\Submittal_100%\DW\Gis\C-Civil\C-07-124.dwg, Tab: C-07-124

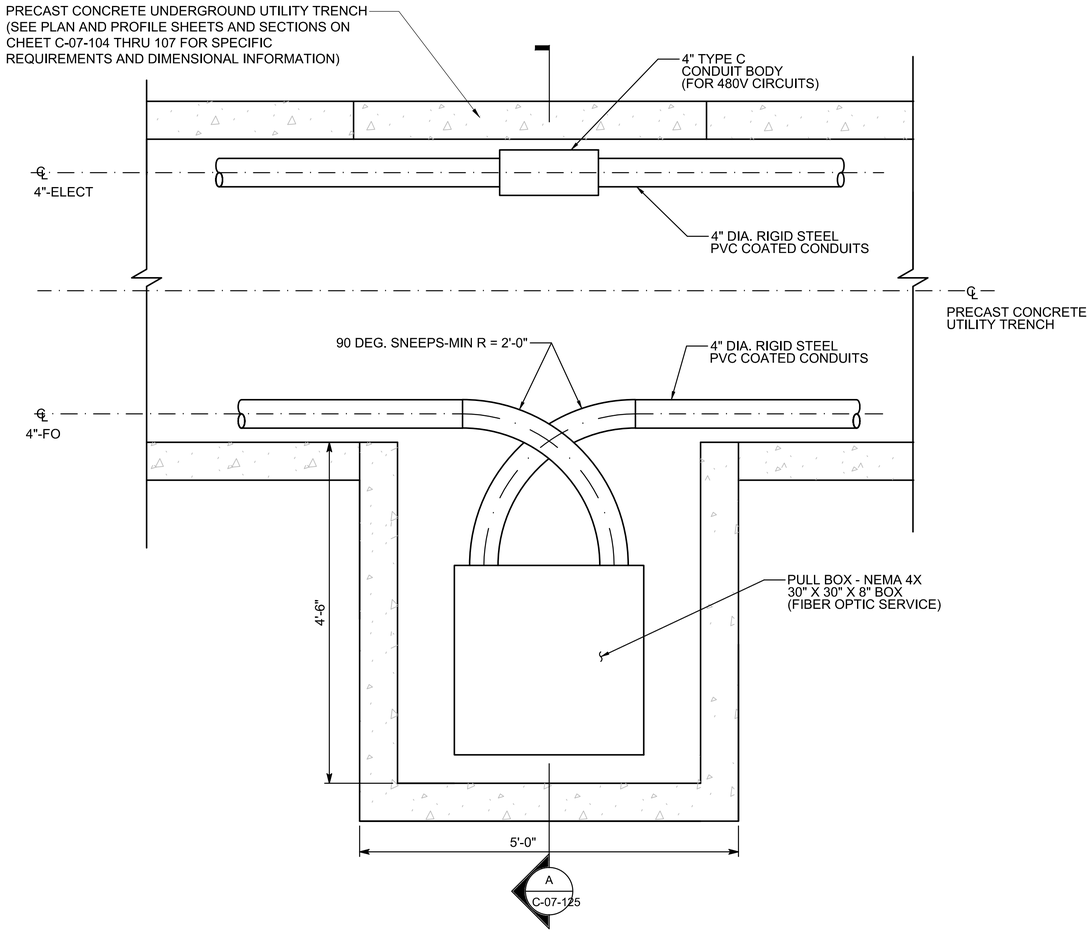

1 TYPICAL PULL BOX (IN CONCRETE UTILITY TRENCH) DETAIL

1"=1'-0"

C-07-74,-75,-76,-77,-79

NOTE:

1. PIPELINES SHOWN ARE TYPICAL ONLY. FOR SPECIFIC REQUIREMENTS REFER TO PLAN AND PROFILE DRAWINGS.

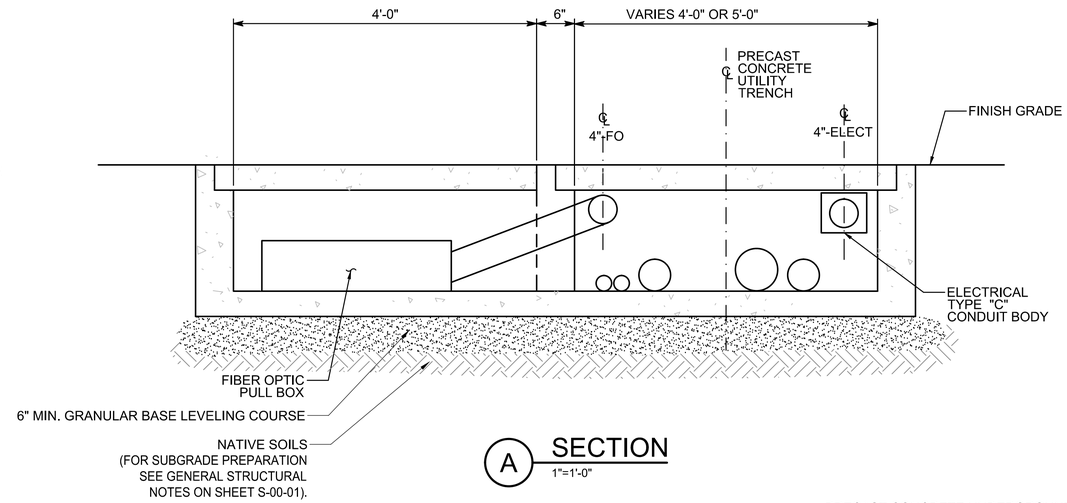

A SECTION

1"=1'-0"

PRECAST CONCRETE UNDERGROUND UTILITY TRENCH NOTES:

1. PRECAST CONCRETE UTILITY TRENCH COMPONENTS (I.E. LIDS, WALLS, AND BASE SLAB) SHALL BE DESIGNED BY PRECAST MANUFACTURER WITH LOADING IN ACCORDANCE WITH AASHTO HS20-44 AND PER SPECIFICATION SECTION 03 40 00.
2. CONCRETE SHALL BE 5,000 P.S.I. COMPRESSIVE STRENGTH @ 28 DAYS. REINFORCING STEEL SHALL BE ASTM A-615.
3. ALL PIPING AND CONDUIT SHALL BE SECURED TO THE WALLS OR BASE SLAB OF THE CONCRETE TRENCH WITH ANCHOR BOLTS, UNISTRUT, OR CONCRETE PIPE SUPPORTS. CONTRACTOR SHALL INSTALL SUPPORTS WHEREVER NECESSARY TO PROPERLY SUPPORT PIPING AND CONDUIT PER SPECIFICATION 40 05 15.
4. CONTRACTOR RESPONSIBLE FOR LOCATING AND VERIFYING LOCATION OF ALL UTILITIES LOCATED WITHIN AREAS TO BE AFFECTED BY CONSTRUCTION.
5. ALL PIPE PENETRATIONS SHALL BE LINK SEALED IN ACCORDANCE WITH SPECIFICATIONS.
6. SEE MECHANICAL DRAWINGS FOR ALL PIPE PENETRATIONS.

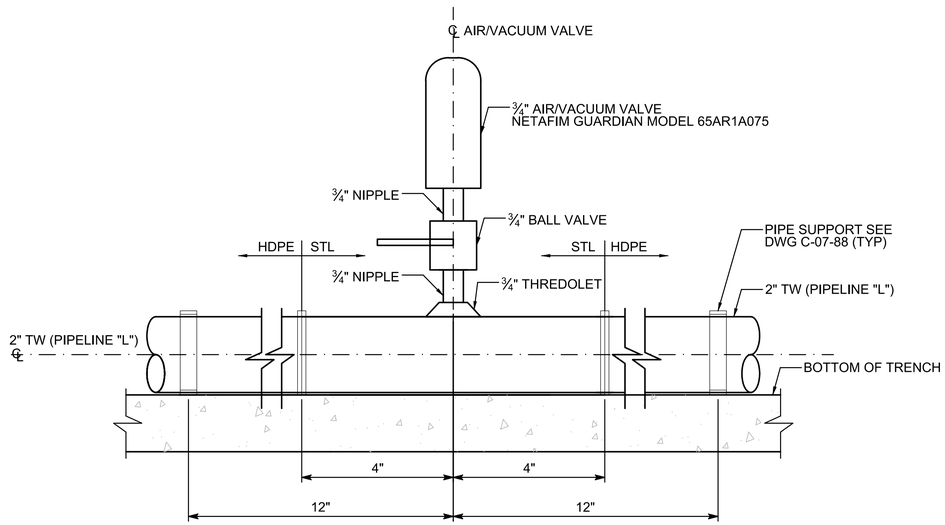

2 AIR/VACUUM VALVE DETAIL

2"=1'-0"

C-07-74, 76

- FINAL DESIGN - FOR AGENCY APPROVAL ONLY

REGISTERED PROFESSIONAL ENGINEER
BENJAMIN J. WUERZ
C 67811
EXP 6/30/17
STATE OF CALIFORNIA

ETIC ENGINEERING

ARCADIS

NO.	DATE	DESCRIPTION	GM/SPEC	DWN	CHKD	SUPV	APVD	BY
1	11/18/15	FINAL DESIGN		AJW	WLM	BW	RAO	
0	9/8/14	PRE-FINAL (90%) DESIGN						

REVISIONS

APPROVED BY	
RAO	SO
	SUPV
	DSGN
	DWN
	CHKD
	OK
	DATE
	SCALES

TOPOCK GROUNDWATER REMEDIATION PROJECT

INTERSECTION DETAILS

GAS TRANSMISSION & DISTRIBUTION
PACIFIC GAS AND ELECTRIC COMPANY
SAN FRANCISCO, CALIFORNIA

MICROFILM	
BILL OF MATL	
DWG LIST	
SUPSDS	
SUPSD BY	
SHEET NO.	of SHEETS
C-07-125	REV 1

N1808

11/02/2015, 17:03, G:\Graphics\ARTOPOCK-01\Submittal_100%\DWGs\C-Civil\C-07-125.dwg, Tab: C-07-125

Pipeline	Profile Sheet	Sta	Utility Owner	Utility Pipe Diameter (in)	Crossing Detail	Minimum Clearance (ft)	REMEDY PIPES									
							FW	RW	CA	TW	ELECT	12 kV ELECT	FIBER OPTIC	DRAIN	SPARE	Trench Section Sheet
A	C-07-21	28+10	Pacific Gas & Electric	4	1	1	2-6	6	6		2	4	4, 2		6, 2	C-07-100
A	C-07-23	41+40	Pacific Gas & Electric	20 -1	1	1	2-6	8	6			4	4		8	C-07-100
A	C-07-23	44+52	Southwestern Gas	4	1	2	2-6	8	6			4	4		8	C-07-100
A	C-07-23	53+80	Pacific Gas & Electric	20 -1	2	1	2-6	8	8			4	4		8	C-07-102
B	C-07-30	43+XX	Pacific Gas & Electric	30	1	2	12									C-07-101
B	C-07-30	43+XX	Kinder Morgan	30?	1	2	12									C-07-101
B	C-07-30	44+XX	Pacific Gas & Electric	30?	1	2	12									C-07-101
B	C-07-30	48+60	Transwestern Gas	24	1	2	12									C-07-101
B	C-07-31	51+00	Southwestern Water	2	none[1]	1	12									C-07-101
B	C-07-31	51+75	Mojave Electric	?	2	1.5	12									C-07-101
B	C-07-31	52+40	Mojave Electric	?	2	1.5	12									C-07-101
H	C-07-25	15+08	Southwestern Gas	4	1	2	6	6	6		3-2		2		6, 2	C-07-101
H	C-07-25	12+40	Southern Californa Gas	30	1	2	6	6	6		4		2	4	6, 2	C-07-101
I	C-07-78	12+20	Pacific Gas & Electric	30	1	2	2	4			4		2		4, 2	C-07-102
I	C-07-78	12+55	Pacific Gas & Electric	2	none[1]	1	2	4			4		2		4, 2	C-07-101
1 - Relocate interferring utility																

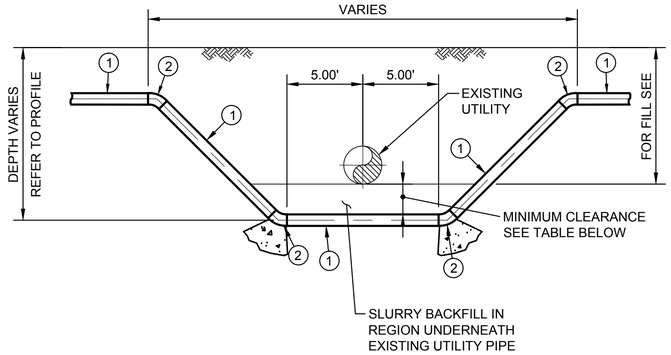

KEY

(1) HDPE SDR 11 (STEEL PIPE SIZE) = PRESSURE RATING = 200 PSI PER AWWA C-906 AND ASTM C-3408.

(2) HDPE BUTT FUSED 45 DEGREE ELBOW PER ANSI/AWWA C-906 AND ASTM C-3408

1 UNDER CROSSING DETAIL

N.T.S.

VARIES, SEE TABLE

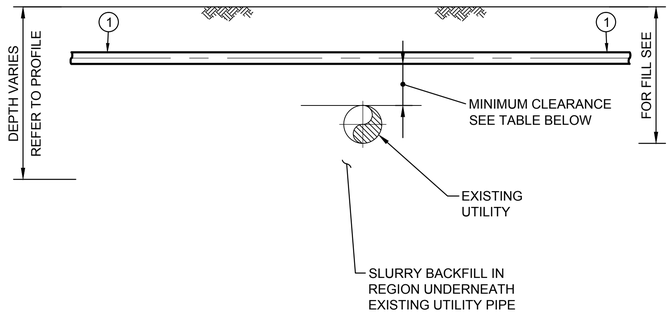

KEY

(1) HDPE SDR 11 (STEEL PIPE SIZE) = PRESSURE RATING = 200 PSI PER AWWA C-906 AND ASTM C-3408.

2 OVER CROSSING DETAIL

N.T.S.

VARIES, SEE TABLE

- FINAL DESIGN -
FOR AGENCY APPROVAL ONLY

REGISTERED PROFESSIONAL ENGINEER
BENJAMIN J. WUERL
C 67811
EXP 6/30/14
CIVIL
STATE OF CALIFORNIA

ETIC ENGINEERING

ARCADIS

NO.	DATE	DESCRIPTION	GM/SPEC	DWN	CHKD	SUPV	APVD BY
1	11/18/15	FINAL DESIGN	AJW	WLM	BW	RAO	
0	9/8/14	PRE-FINAL (90%) DESIGN	PH	VMB	VMB	VMB	

REVISIONS

APPROVED BY	
RAO	SO
	SUPV
	DSGN
	DWN
	CHKD
	OK
	DATE
	SCALES

TOPOCK GROUNDWATER REMEDIATION PROJECT

CROSSING DETAILS

GAS TRANSMISSION & DISTRIBUTION
PACIFIC GAS AND ELECTRIC COMPANY
SAN FRANCISCO, CALIFORNIA

MICROFILM	
BILL OF MATL	
DWG LIST	
SUPSDS	
SUPSD BY	
SHEET NO.	of SHEETS
C-07-126	REV 1

N1808

11/02/2015, 17:03, G:\Graphics\AR\TOPOCK-01\Submittal_100%\DWG\C-Civil\C-07-126.dwg, Tab: C-07-126

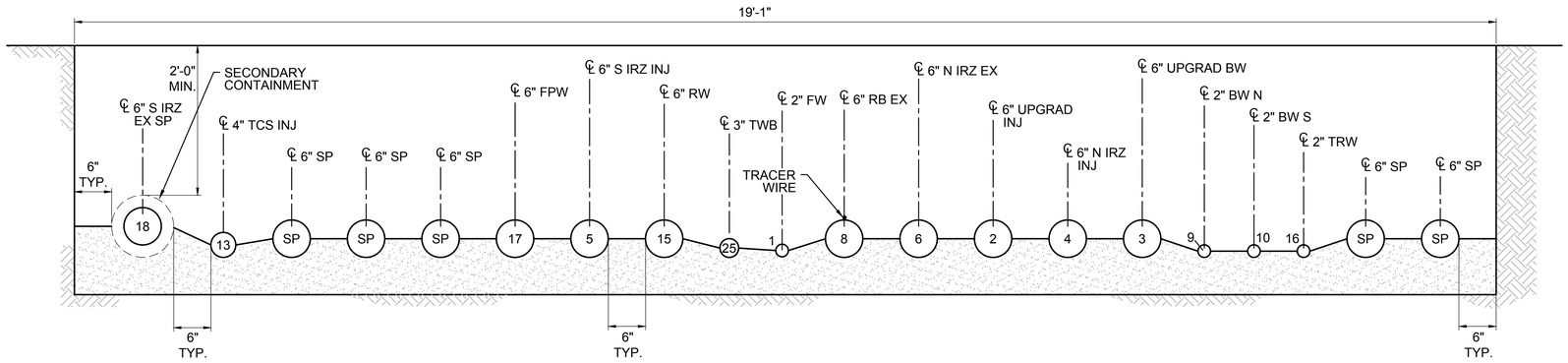

CA SECTION
1"=1'-0"
C-06-03

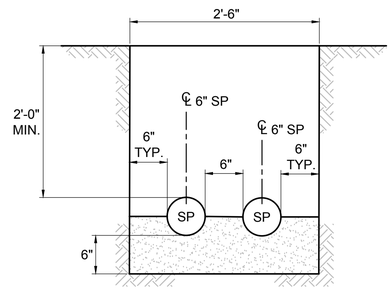

CB SECTION
1"=1'-0"
C-06-03

NOTES:

1. PIPE SUPPORTS AND CLEANOUTS NOT SHOWN FOR CLARITY.
2. ALL COVERS SHALL BE TRAFFIC RATED.
3. CASING SPACERS NOT SHOWN FOR CLARITY.
4. PIPE BEDDING SHALL EXTEND HALF WAY UP THE PIPES PER THE SPECIFICATIONS.

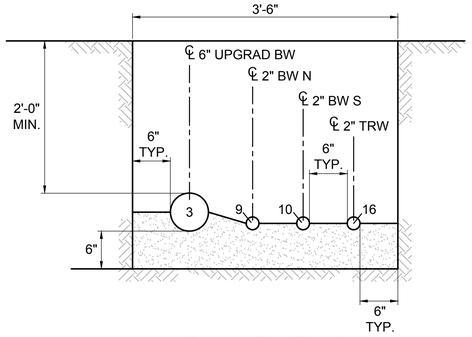

CC SECTION
1"=1'-0"
C-06-03

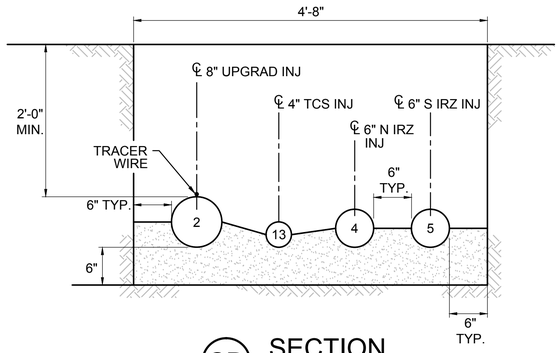

CD SECTION
1"=1'-0"
C-06-03

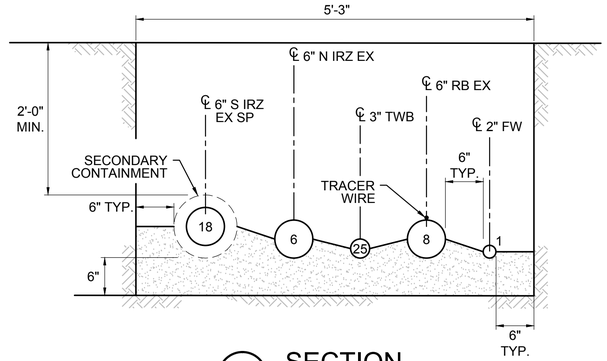

CE SECTION
1"=1'-0"
C-06-03

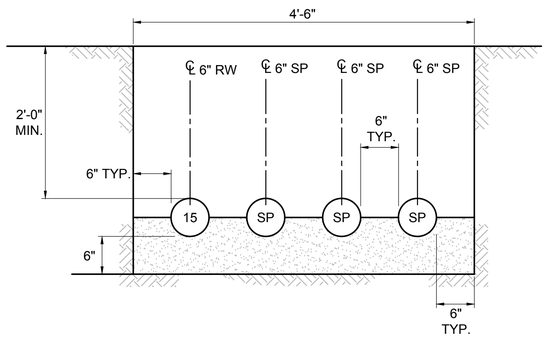

CF SECTION
1"=1'-0"
C-06-03

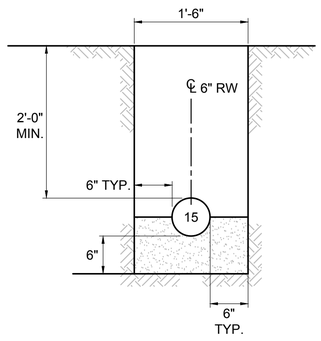

CG SECTION
1"=1'-0"
C-06-03

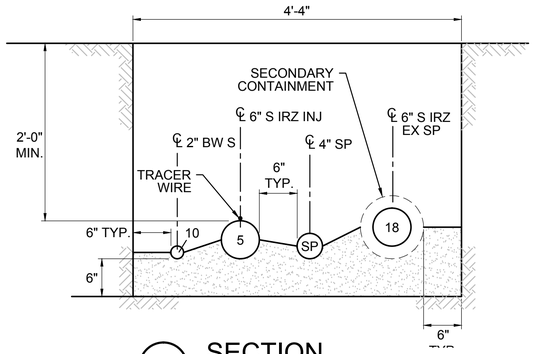

CH SECTION
1"=1'-0"
C-06-03

- FINAL DESIGN - FOR AGENCY APPROVAL ONLY

REGISTERED PROFESSIONAL ENGINEER
BENJAMIN J. WUERL
C 67811
EXP 6/30/17
STATE OF CALIFORNIA

ETIC ENGINEERING

ARCADIS

NO.	DATE	DESCRIPTION	GM/SPEC	DWN	CHKD	SUPV	APVD	BY
2	11/18/15	FINAL DESIGN		AJW	WLM	BW	RAO	
1	8/5/15	90% RTC RESOLUTION		AJW	KLD	WLM	BJW	
0	09/08/14	PRE-FINAL (90%) DESIGN		AJW	BAS	JPB	JEF	

REVISIONS

APPROVED BY	
RAO	SO
	SUPV
	DSGN
	DWN
	CHKD
	OK
	DATE
	SCALES

TOPOCK GROUNDWATER REMEDIATION PROJECT
MW-20 BENCH AREA
TRENCH SECTIONS
SHEET 1 OF 2
GAS TRANSMISSION & DISTRIBUTION
PACIFIC GAS AND ELECTRIC COMPANY
SAN FRANCISCO, CALIFORNIA

MICROFILM	
BILL OF MATL	
DWG LIST	
SUPSDS	
SUPSD BY	
SHEET NO. of SHEETS	
C-07-127	REV 2

11/02/2015, 17:03, G:\Graphics\ART\TOPOCK\2015Submittal_100%\DWGs\C-Civil\C-07-127-128_MW-20_Bench_PipeTrenchDetails.dwg, Tab: C-07-127

N1808

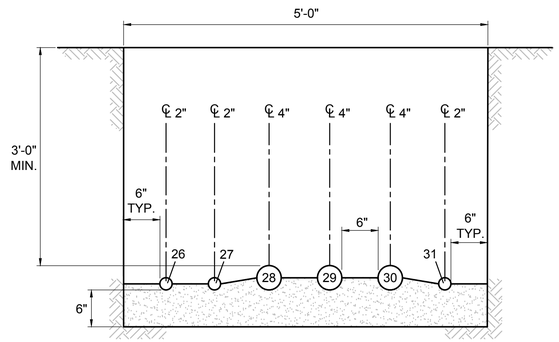

CI SECTION
1"=1'-0"
C-06-03

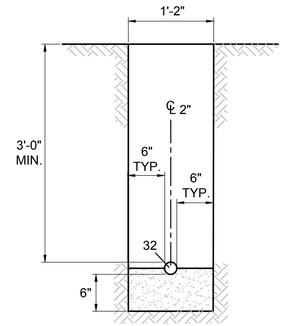

CJ SECTION
1"=1'-0"
C-06-03

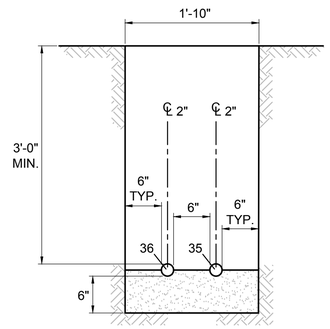

CK SECTION
1"=1'-0"
C-06-03

NOTES:
1. PIPE SUPPORTS AND CLEANOUTS NOT SHOWN FOR CLARITY.
2. ALL COVERS SHALL BE TRAFFIC RATED.
3. CASING SPACERS NOT SHOWN FOR CLARITY.
4. PIPE BEDDING SHALL EXTEND HALF WAY UP THE PIPES PER THE SPECIFICATIONS.

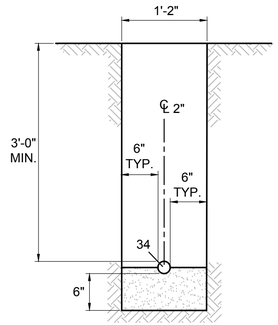

CL SECTION
1"=1'-0"
C-06-03

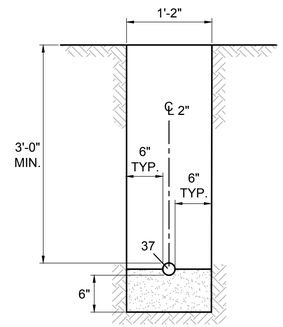

CM SECTION
1"=1'-0"
C-06-03

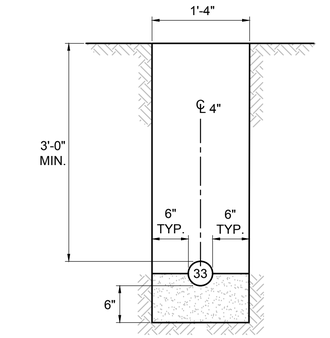

CN SECTION
1"=1'-0"
C-06-03

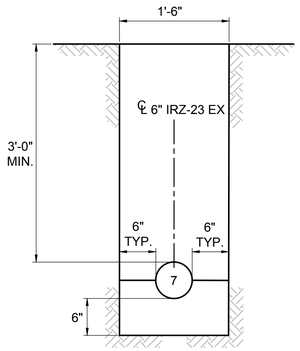

CP SECTION
1"=1'-0"
C-06-03

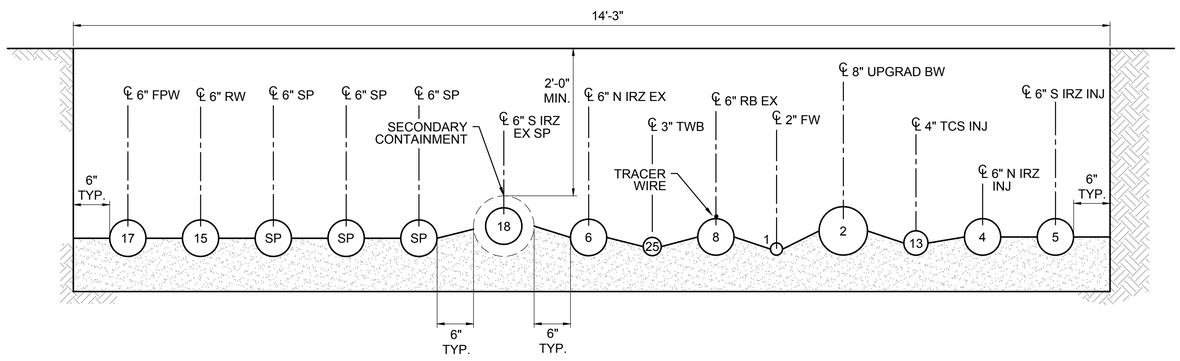

CQ SECTION
1"=1'-0"
C-06-03

- FINAL DESIGN - FOR AGENCY APPROVAL ONLY

REGISTERED PROFESSIONAL ENGINEER
BENJAMIN J. WUERL
C 67811
EXP 6/30/17
STATE OF CALIFORNIA

ETIC ENGINEERING
ARCADIS

NO.	DATE	DESCRIPTION	GM/SPEC	DWN	CHKD	SUPV	APVD	BY
1	11/18/15	FINAL DESIGN		AJW	WLM	BW	RAO	
0	09/08/14	PRE-FINAL (90%) DESIGN		AJW	BAS	JPB	JEF	

REVISIONS

APPROVED BY	
RAO	SO
	SUPV
	DSGN
	DWN
	CHKD
	OK
	DATE
	SCALES

TOPOCK GROUNDWATER REMEDIATION PROJECT
MW-20 BENCH AREA
TRENCH SECTIONS
SHEET 2 OF 2
GAS TRANSMISSION & DISTRIBUTION
PACIFIC GAS AND ELECTRIC COMPANY
SAN FRANCISCO, CALIFORNIA

MICROFILM	
BILL OF MATL	
DWG LIST	
SUPSDS	
SUPSD BY	
SHEET NO.	of SHEETS
C-07-128	REV 1

N1808

11/02/2015, 17:03, G:\Graphics\ART\TOPOCK-01\Submittal_100%\DWG\sC-Civil\C-07-127-128, MW-20, Bench, PipeTrenchDetails.dwg, Tab: C-07-128

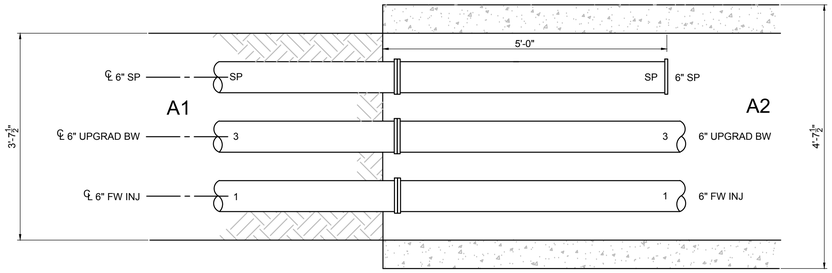

15 DETAIL
3/4"=1'-0"
C-07-20

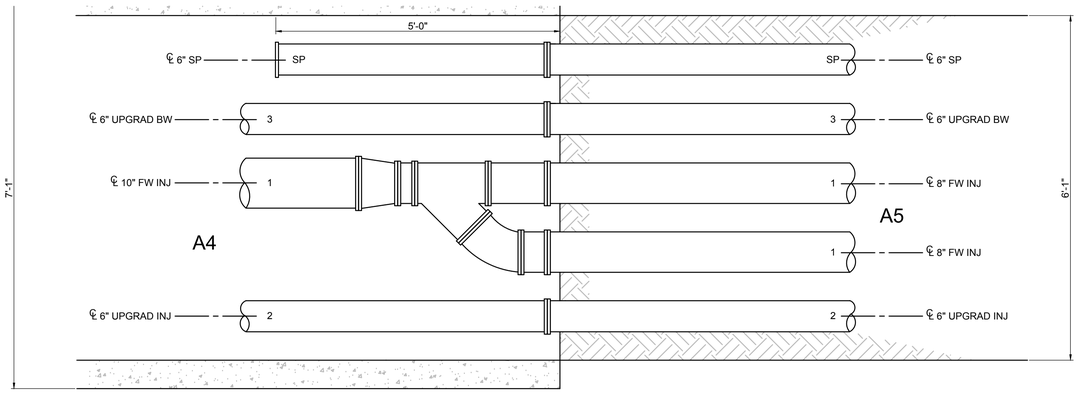

16 DETAIL
3/4"=1'-0"
C-07-21

NOTES:
1. PIPE SUPPORTS AND CLEANOUTS NOT SHOWN FOR CLARITY.
2. ALL COVERS SHALL BE TRAFFIC RATED.
3. CASING SPACERS NOT SHOWN FOR CLARITY.

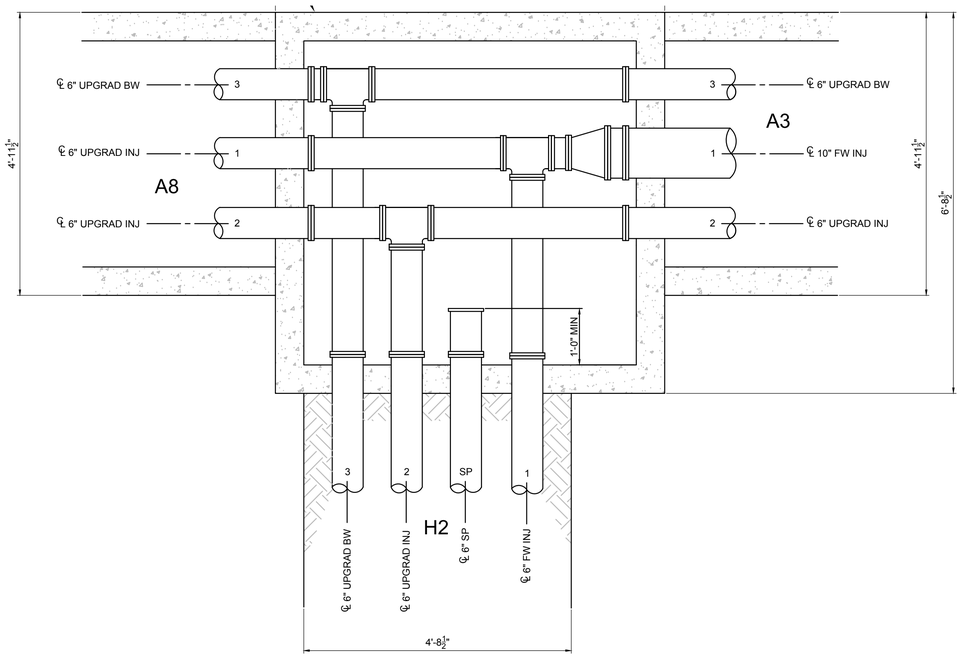

17 DETAIL
3/4"=1'-0"
C-07-21,-25

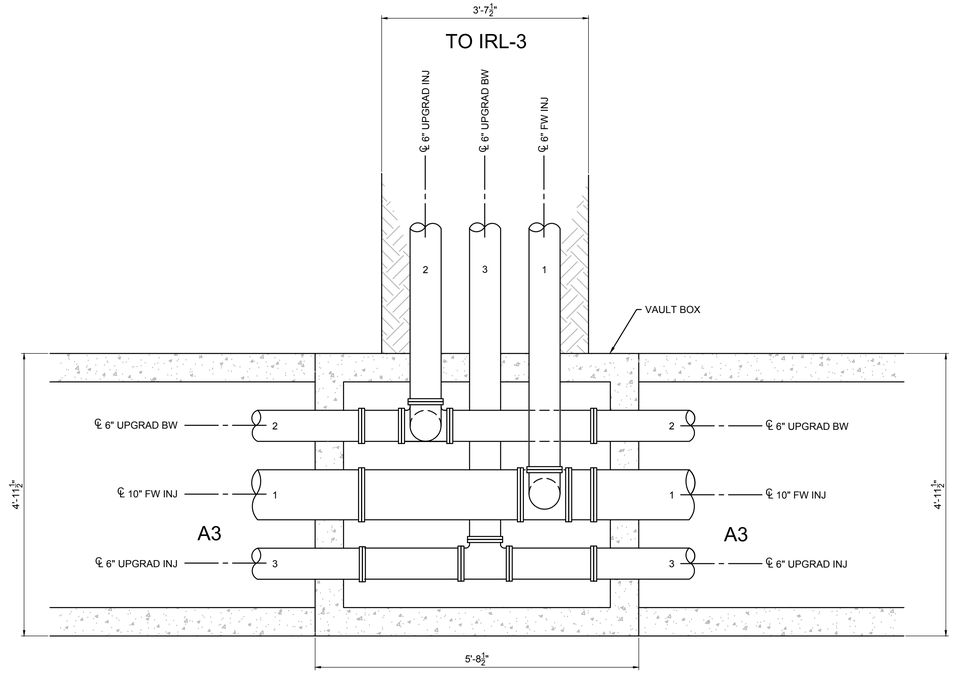

18 DETAIL
3/4"=1'-0"
C-07-21

- FINAL DESIGN - FOR AGENCY APPROVAL ONLY

REGISTERED PROFESSIONAL ENGINEER
BENJAMIN J. WUEST
C 67811
EXP 6/30/17
CIVIL
STATE OF CALIFORNIA

ETIC ENGINEERING
ARCADIS

NO.	DATE	DESCRIPTION	GM/SPEC	DWN	CHKD	SUPV	APVD BY
0	11/18/15	FINAL DESIGN	AJW	WLM	BW	RAO	

REVISIONS

APPROVED BY	
RAO	SO
	SUPV
	DSGN
	DWN
	CHKD
	OK
	DATE
	SCALES

TOPOCK GROUNDWATER REMEDIATION PROJECT

INTERSECTION DETAILS

GAS TRANSMISSION & DISTRIBUTION
PACIFIC GAS AND ELECTRIC COMPANY
SAN FRANCISCO, CALIFORNIA

MICROFILM	
BILL OF MATL	
DWG LIST	
SUPSDS	
SUPSD BY	
SHEET NO. of SHEETS	
C-07-129	REV 0

N1808

11/02/2015, 17:04, G:\Graphics\ARTOPOCK-01\Submittal_100%\DWGs\C-Civil\C-07-129 to 135_PipeTrenchDetails.dwg, Tab: C-07-129

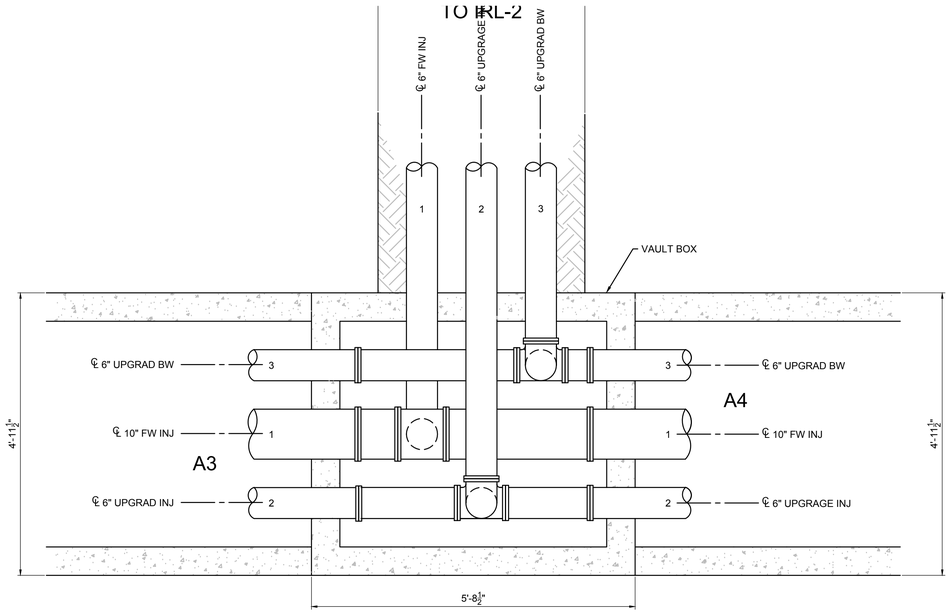

19 DETAIL
3/4"=1'-0"
C-07-21

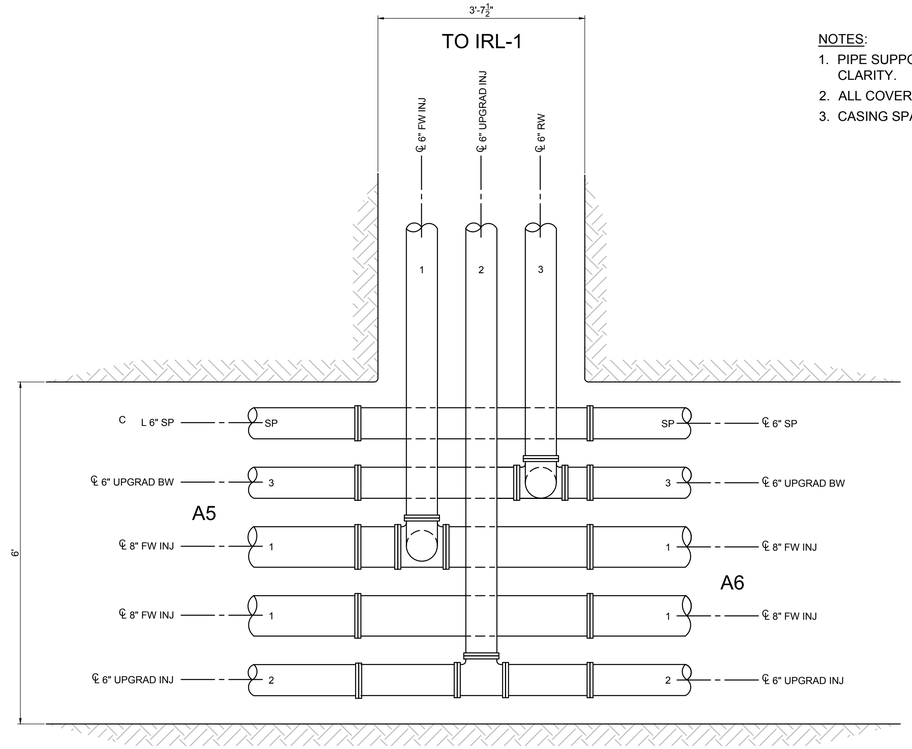

NOTES:
1. PIPE SUPPORTS AND CLEANOUTS NOT SHOWN FOR CLARITY.
2. ALL COVERS SHALL BE TRAFFIC RATED.
3. CASING SPACERS NOT SHOWN FOR CLARITY.

20 DETAIL
3/4"=1'-0"

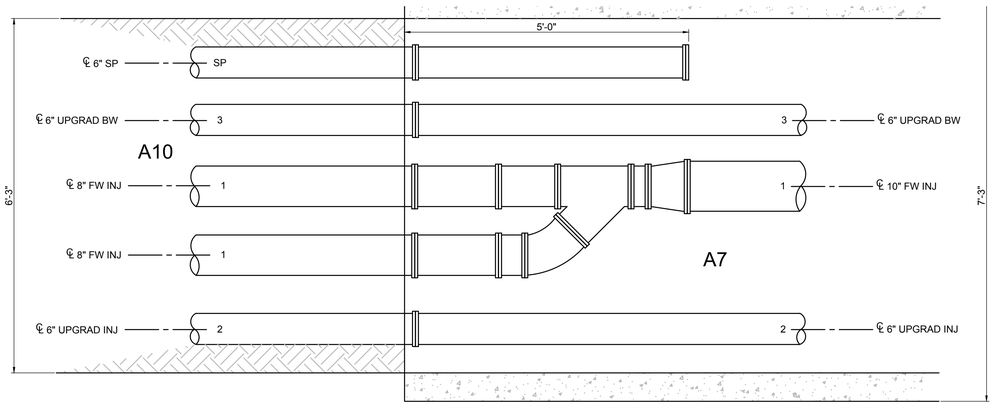

21 DETAIL
3/4"=1'-0"
C-07-22

- FINAL DESIGN -
FOR AGENCY
APPROVAL ONLY

REGISTERED PROFESSIONAL ENGINEER
BENJAMIN J. WUERL
C 67811
EXP 6/30/17
STATE OF CALIFORNIA

ETIC ENGINEERING

ARCADIS

NO.	DATE	DESCRIPTION	GM/SPEC	DWN	CHKD	SUPV	APVD BY
0	11/18/15	FINAL DESIGN	AJW	WLM	BW	RAO	

REVISIONS

APPROVED BY	
RAO	SO
	SUPV
	DSGN
	DWN
	CHKD
	OK
	DATE
	SCALES

TOPOCK GROUNDWATER REMEDIATION PROJECT

INTERSECTION DETAILS

GAS TRANSMISSION & DISTRIBUTION
PACIFIC GAS AND ELECTRIC COMPANY
SAN FRANCISCO, CALIFORNIA

MICROFILM	
BILL OF MATL	
DWG LIST	
SUPSDS	
SUPSD BY	
SHEET NO. of SHEETS	
C-07-130	REV 0

N1608

11/02/2015, 17:04, G:\Graphics\AR\TOPOCK-01\Submittal_100%\DWG\dC-Civil\C-07-129 to 135_PipeTrenchDetails.dwg, Tab: C-07-130

NOTES:

1. PIPE SUPPORTS AND CLEANOUTS NOT SHOWN FOR CLARITY.
2. ALL COVERS SHALL BE TRAFFIC RATED.
3. CASING SPACERS NOT SHOWN FOR CLARITY.

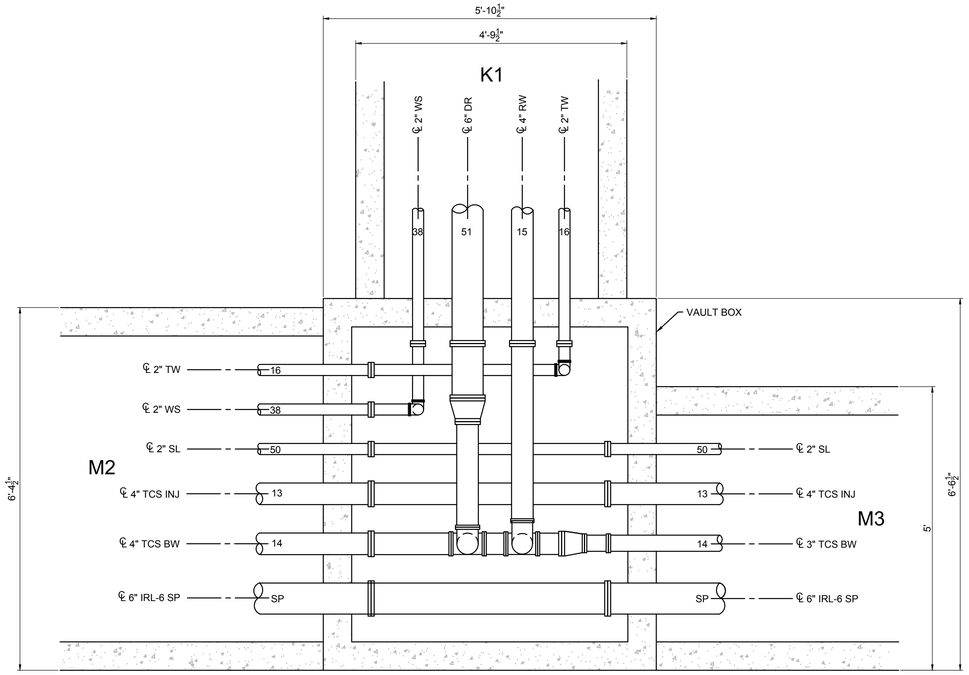

22 DETAIL
3/4"=1'-0"

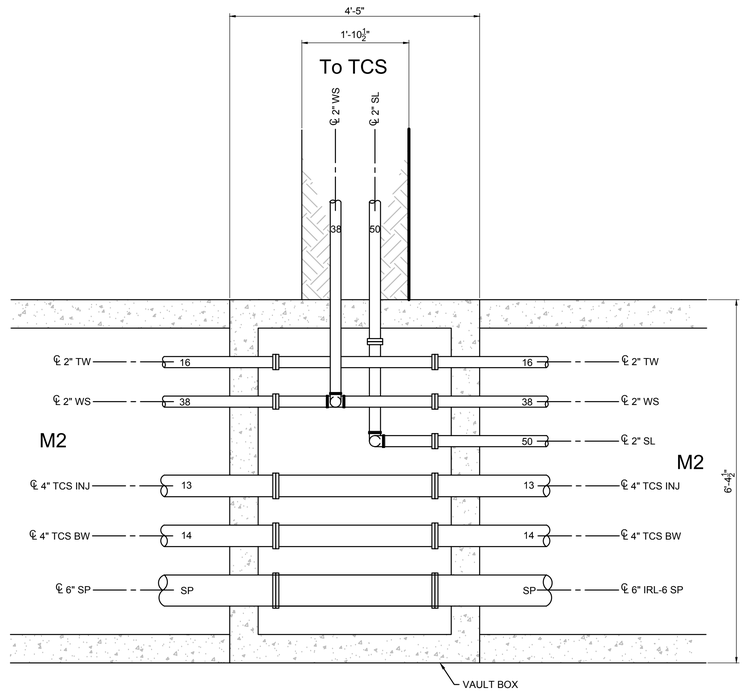

23 DETAIL
3/4"=1'-0"

- FINAL DESIGN - FOR AGENCY APPROVAL ONLY

REGISTERED PROFESSIONAL ENGINEER
BENJAMIN J. WUERL
C 67811
EXP 6/30/17
CIVIL
STATE OF CALIFORNIA

ETIC ENGINEERING

ARCADIS

NO.	DATE	DESCRIPTION	GM/SPEC	DWN	CHKD	SUPV	APVD BY
0	11/18/15	FINAL DESIGN	AJW	WLM	BW	RAO	

REVISIONS

APPROVED BY	
RAO	SO
	SUPV
	DSGN
	DWN
	CHKD
	OK
	DATE
	SCALES

TOPOCK GROUNDWATER REMEDIATION PROJECT

INTERSECTION DETAILS

GAS TRANSMISSION & DISTRIBUTION
PACIFIC GAS AND ELECTRIC COMPANY
SAN FRANCISCO, CALIFORNIA

MICROFILM	
BILL OF MATL	
DWG LIST	
SUPSDS	
SUPSD BY	
SHEET NO. of	SHEETS
C-07-131	REV 0

N1808

11/02/2015, 17:04, G:\Graphics\ART\TOPOCK\2015Submittal_100%\DWGs\C-Civil\C-07-129 to 135_PipeTrenchDetails.dwg, Tab: C-07-131

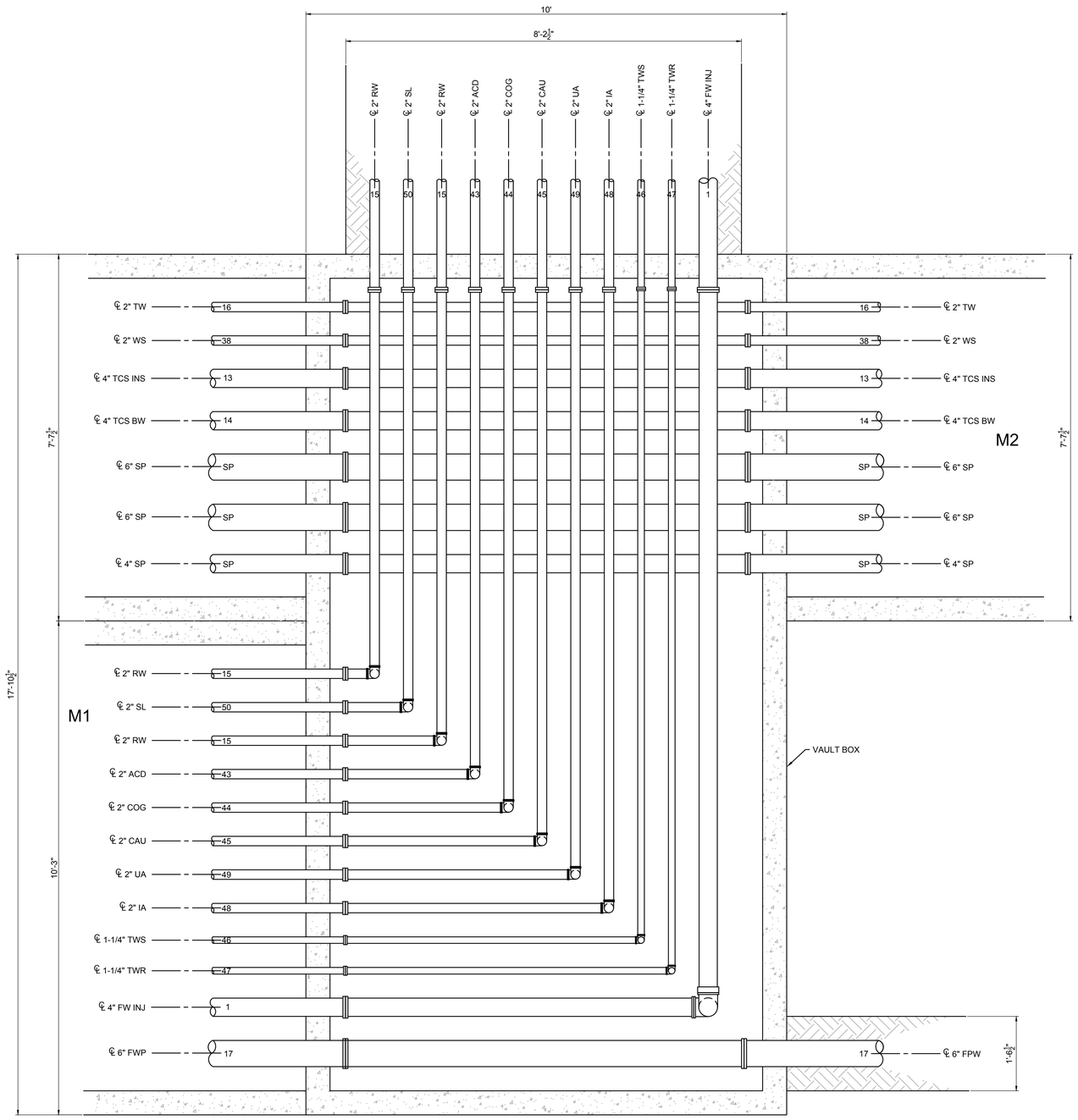

24 DETAIL
3/4"=1'-0"

NOTES:
1. PIPE SUPPORTS AND CLEANOUTS NOT SHOWN FOR CLARITY.
2. ALL COVERS SHALL BE TRAFFIC RATED.
3. CASING SPACERS NOT SHOWN FOR CLARITY.

- FINAL DESIGN - FOR AGENCY APPROVAL ONLY

REGISTERED PROFESSIONAL ENGINEER
BENJAMIN J. WUERL
C 67811
EXP 6/30/17
STATE OF CALIFORNIA

ETIC ENGINEERING

ARCADIS

NO.	DATE	DESCRIPTION	GM/SPEC	DWN	CHKD	SUPV	APVD BY
0	11/18/15	FINAL DESIGN	AJW	WLM	BW	RAO	

REVISIONS

APPROVED BY	
RAO	SO
	SUPV
	DSGN
	DWN
	CHKD
	OK
	DATE
	SCALES

TOPOCK GROUNDWATER REMEDIATION PROJECT

INTERSECTION DETAILS

GAS TRANSMISSION & DISTRIBUTION
PACIFIC GAS AND ELECTRIC COMPANY
SAN FRANCISCO, CALIFORNIA

MICROFILM	
BILL OF MATL	
DWG LIST	
SUPSDS	
SUPSD BY	
SHEET NO. of	SHEETS
C-07-132	REV 0

11/02/2015, 17:04, G:\Graphics\ART\TOPOCK\01\Submittal, 100%\DWGs\C-Civil\C-07-129 to 135_PipeTrenchDetails.dwg, Tab: C-07-132

N1808

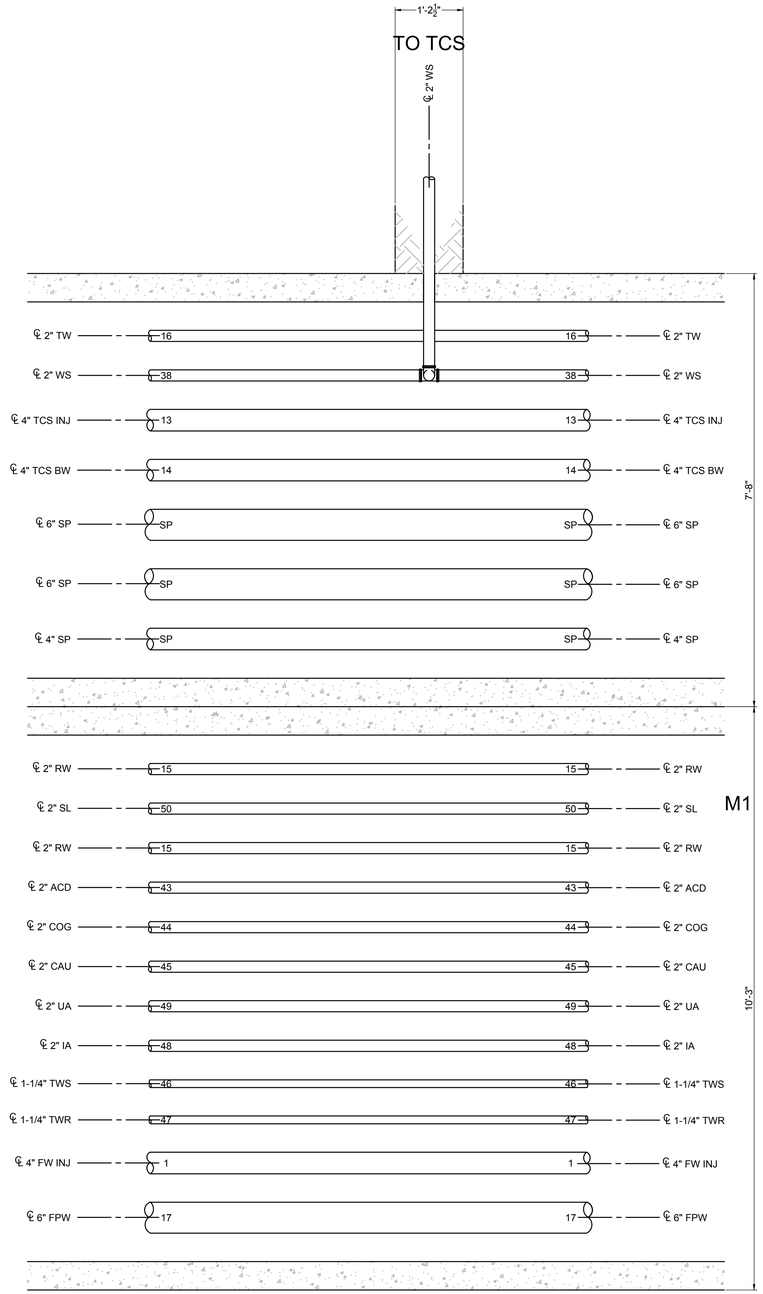

25 DETAIL
3/4"=1'-0"

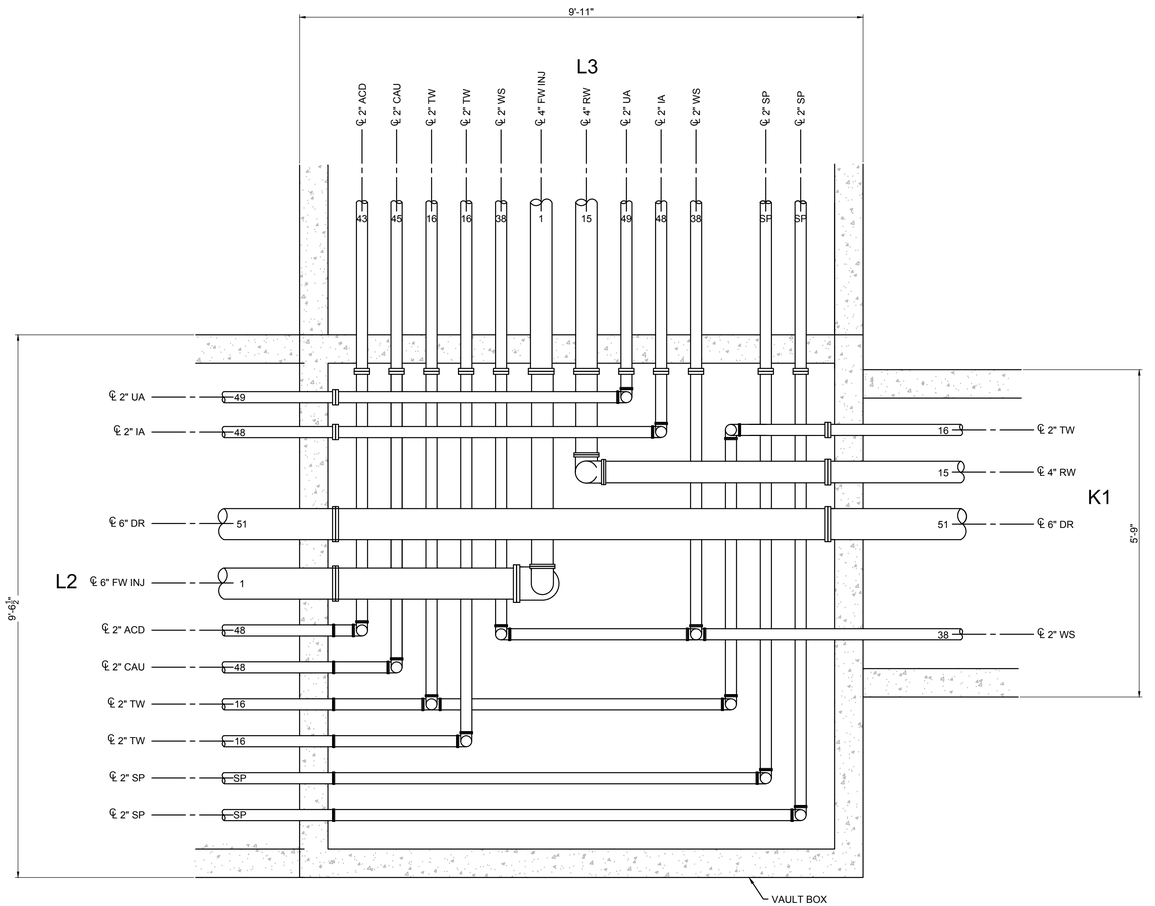

26 DETAIL
3/4"=1'-0"

NOTES:
1. PIPE SUPPORTS AND CLEANOUTS NOT SHOWN FOR CLARITY.
2. ALL COVERS SHALL BE TRAFFIC RATED.
3. CASING SPACERS NOT SHOWN FOR CLARITY.

- FINAL DESIGN - FOR AGENCY APPROVAL ONLY

REGISTERED PROFESSIONAL ENGINEER
BENJAMIN J. WUEST
C 67811
EXP 6/30/17
CIVIL
STATE OF CALIFORNIA

ETIC ENGINEERING

ARCADIS

NO.	DATE	DESCRIPTION	GM/SPEC	DWN	CHKD	SUPV	APVD BY
0	11/18/15	FINAL DESIGN		AJW	WLM	BW	RAO

REVISIONS

APPROVED BY	
RAO	SO
	SUPV
	DSGN
	DWN
	CHKD
	OK
	DATE
	SCALES

TOPOCK GROUNDWATER REMEDIATION PROJECT

INTERSECTION DETAILS

GAS TRANSMISSION & DISTRIBUTION
PACIFIC GAS AND ELECTRIC COMPANY
SAN FRANCISCO, CALIFORNIA

MICROFILM	
BILL OF MATL	
DWG LIST	
SUPSDS	
SUPSD BY	
SHEET NO.	of SHEETS
C-07-133	REV 0

11/02/2015, 17:04, G:\Graphics\ARIITOPOCK.01\Submittal_100%\DWGs\C-Civil\C-07-129 to 135_PipeTrenchDetails.dwg, Tab: C-07-133

N1808

NOTES:
1. PIPE SUPPORTS AND CLEANOUTS NOT SHOWN FOR CLARITY.
2. ALL COVERS SHALL BE TRAFFIC RATED.
3. CASING SPACERS NOT SHOWN FOR CLARITY.

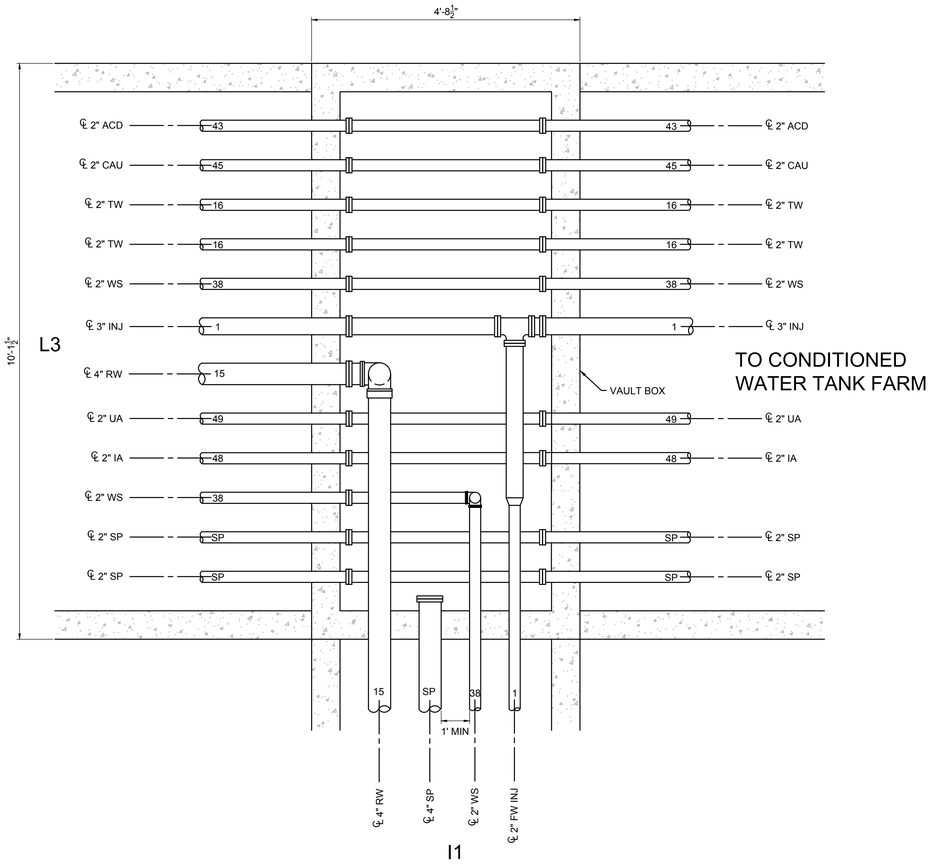

27 DETAIL
3/4"=1'-0"

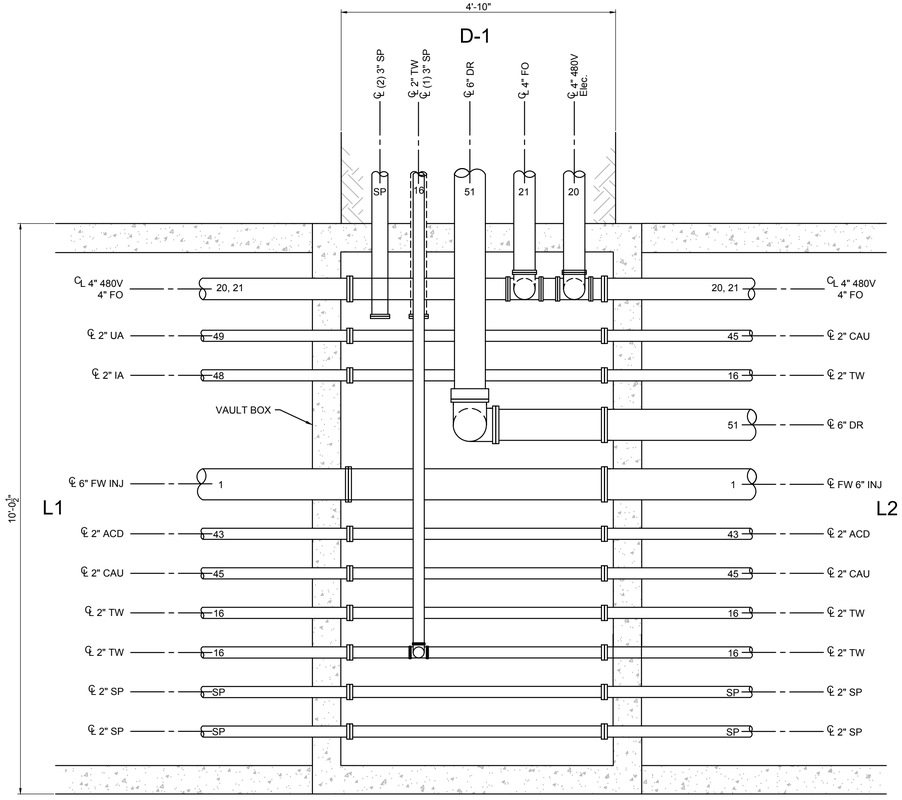

28 DETAIL
3/4"=1'-0"

- FINAL DESIGN - FOR AGENCY APPROVAL ONLY

REGISTERED PROFESSIONAL ENGINEER BENJAMIN J. WUERL C 67811 EXP 6/30/17 STATE OF CALIFORNIA

ETIC ENGINEERING

ARCADIS

NO.	DATE	DESCRIPTION	GM/SPEC	DWN	CHKD	SUPV	APVD BY
0	11/18/15	FINAL DESIGN	AJW	WLM	BW	RAO	

REVISIONS

APPROVED BY	
RAO	SO
	SUPV
	DSGN
	DWN
	CHKD
	OK
	DATE
	SCALES

TOPOCK GROUNDWATER REMEDIATION PROJECT

INTERSECTION DETAILS

GAS TRANSMISSION & DISTRIBUTION
PACIFIC GAS AND ELECTRIC COMPANY
SAN FRANCISCO, CALIFORNIA

MICROFILM	
BILL OF MATL	
DWG LIST	
SUPSDS	
SUPSD BY	
SHEET NO. of SHEETS	
C-07-134	REV 0

N1608

11/02/2015, 17:04, G:\Graphics\AR\TOPOCK-01\Submittal_100%\DWG\C-Civil\C-07-129 to 135_PipeTrenchDetails.dwg, Tab: C-07-134

NOTES:

1. PIPE SUPPORTS AND CLEANOUTS NOT SHOWN FOR CLARITY.
2. ALL COVERS SHALL BE TRAFFIC RATED.
3. CASING SPACERS NOT SHOWN FOR CLARITY.

To Grit Tank

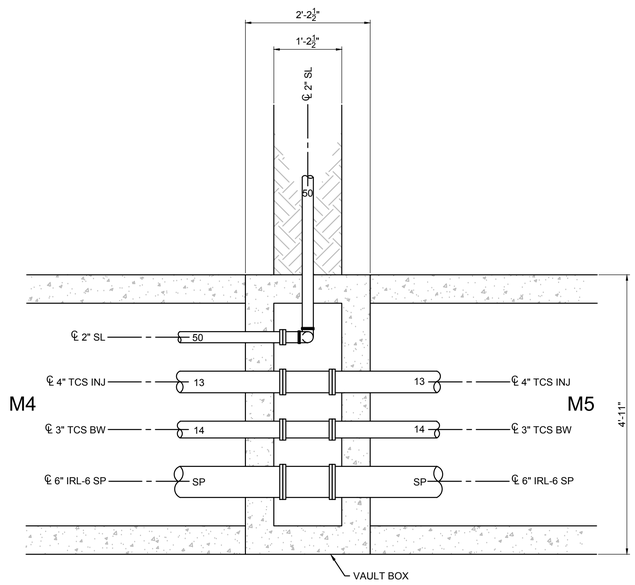

29 DETAIL
3/4"=1'-0"

N1

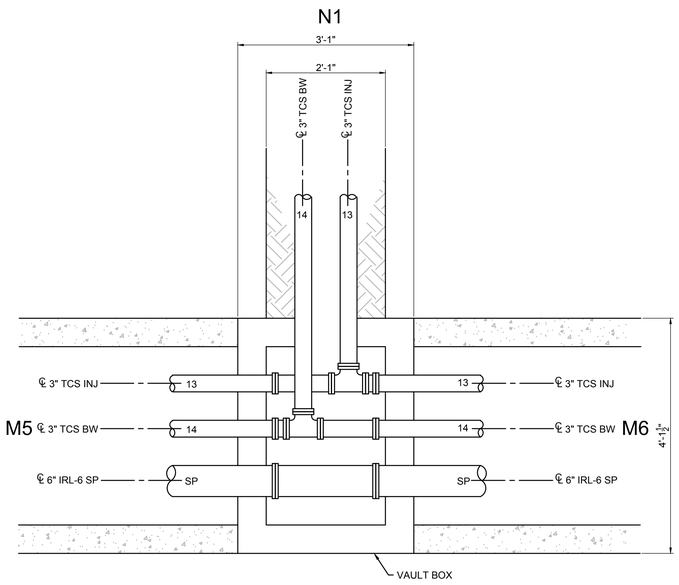

30 DETAIL
3/4"=1'-0"

- FINAL DESIGN - FOR AGENCY APPROVAL ONLY

REGISTERED PROFESSIONAL ENGINEER
BENJAMIN J. WUERL
C 67811
EXP 6/30/17
STATE OF CALIFORNIA

ETIC ENGINEERING

ARCADIS

NO.	DATE	DESCRIPTION	GM/SPEC	DWN	CHKD	SUPV	APVD BY
0	11/18/15	FINAL DESIGN	AJW	WLM	BW	RAO	

REVISIONS

APPROVED BY	
RAO	SO
	SUPV
	DSGN
	DWN
	CHKD
	OK
	DATE
	SCALES

TOPOCK GROUNDWATER REMEDIATION PROJECT

INTERSECTION DETAILS

GAS TRANSMISSION & DISTRIBUTION
PACIFIC GAS AND ELECTRIC COMPANY
SAN FRANCISCO, CALIFORNIA

MICROFILM	
BILL OF MATL	
DWG LIST	
SUPSDS	
SUPSD BY	
SHEET NO. of	SHEETS
C-07-135	REV 0

N1808

11/02/2015, 17:05, G:\Graphics\ART\TOPOCK-01\Submittal_100%\DWGs\C-Civil\C-07-129 to 135_PipeTrenchDetails.dwg, Tab: C-07-135

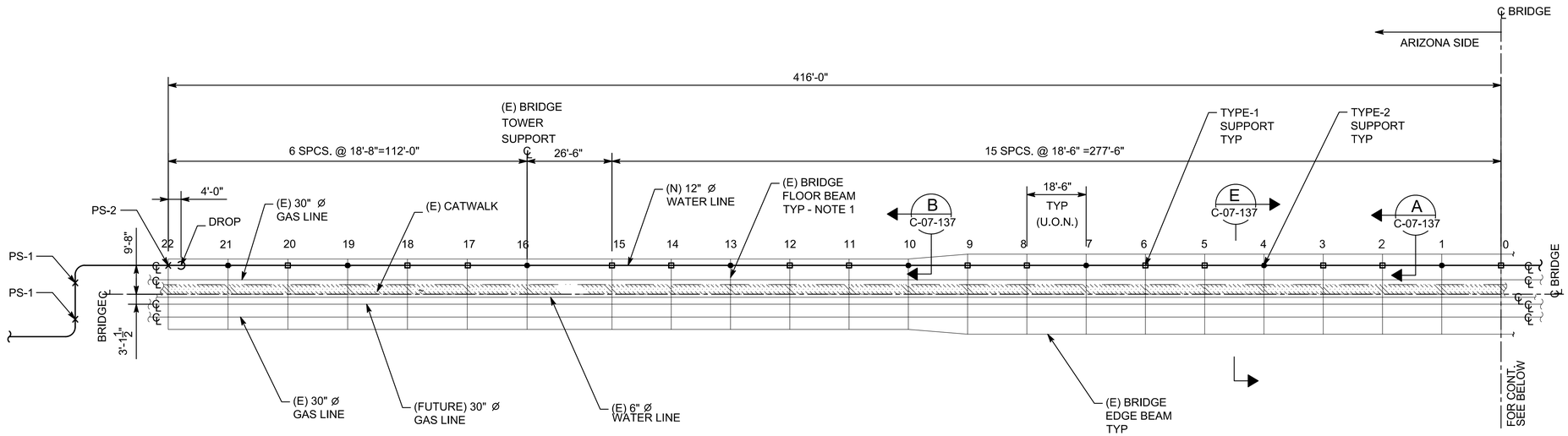

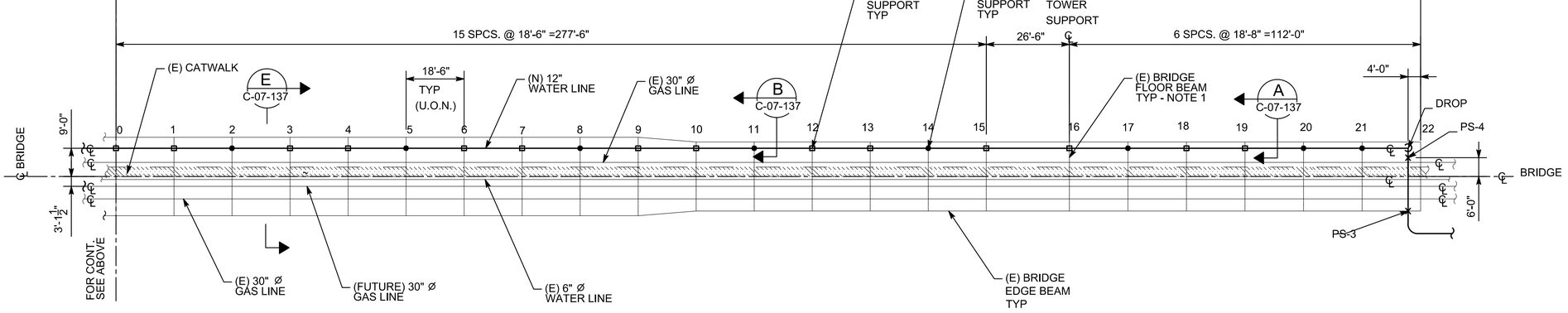

SYMBOLS

- ☐ TYPE-1 SUPPORT
- ● TYPE-2 SUPPORT

NOTES:

1. (E) BRIDGE FLOOR BEAMS ARE EITHER W18X35 OR W24X55.
2. SEE DWG. C-07-137 & C-07-138 FOR SUPPORT DETAILS.

REFERENCES:

1. C-07-29 PIPE LINE B, PLAN & PROFILE.

PLAN (SUPPORT LOCATION)

(SCALE: 1" = 20')

0 20 40 60

SCALE: 1"=20'

- FINAL DESIGN -
FOR AGENCY APPROVAL ONLY

REGISTERED PROFESSIONAL ENGINEER
BENJAMIN J. WUERL
C 67811
EXP 6/30/17
CIVIL
STATE OF CALIFORNIA

ETIC ENGINEERING

ARCADIS

NO.	DATE	DESCRIPTION	GM/SPEC	DWN	CHKD	SUPV	APVD BY
1	11/18/15	FINAL DESIGN		AJW	WLM	BW	RAO
0	9/8/14	PRE-FINAL (90%) DESIGN					

REVISIONS

APPROVED BY	RAO
SO	
SUPV	
DSGN	
DWN	
CHKD	
OK	
DATE	
SCALES	

TOPOCK GROUNDWATER REMEDIATION PROJECT

STRUCTURE-PLAN SECTION LOCATION-12" WATER LINE TOPOCK L300-A ARCH BRIDGE

GAS TRANSMISSION & DISTRIBUTION
PACIFIC GAS AND ELECTRIC COMPANY
SAN FRANCISCO, CALIFORNIA

MICROFILM	
BILL OF MATL	
DWG LIST	
SUPSDS	
SUPSD BY	
SHEET NO.	of SHEETS
C-07-136	REV 1

N1808

11/02/2015, 17:05, G:\Graphics\ARR\TOPOCK-01\Submittal_100%\DWGs\C-Civil\C-07-136.dwg, Tab: C-07-136

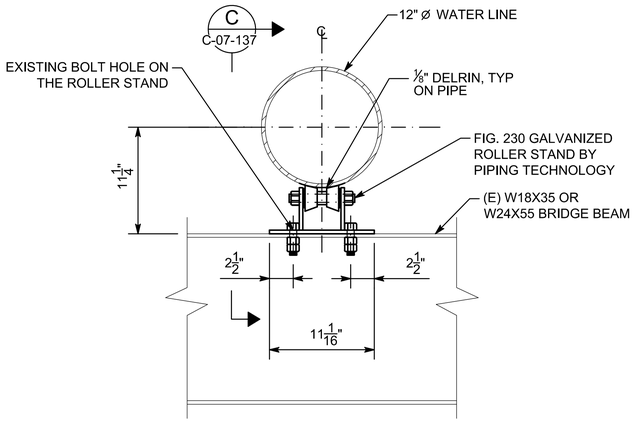

A SECTION
C-07-136 SCALE: 1 1/2" = 1'-0"

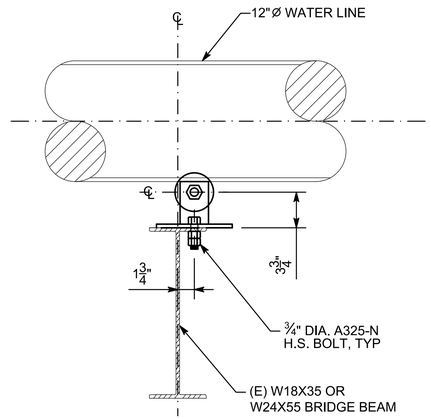

C SECTION
C-07-136 SCALE: 1 1/2" = 1'-0"

TYPE-1 SUPPORT

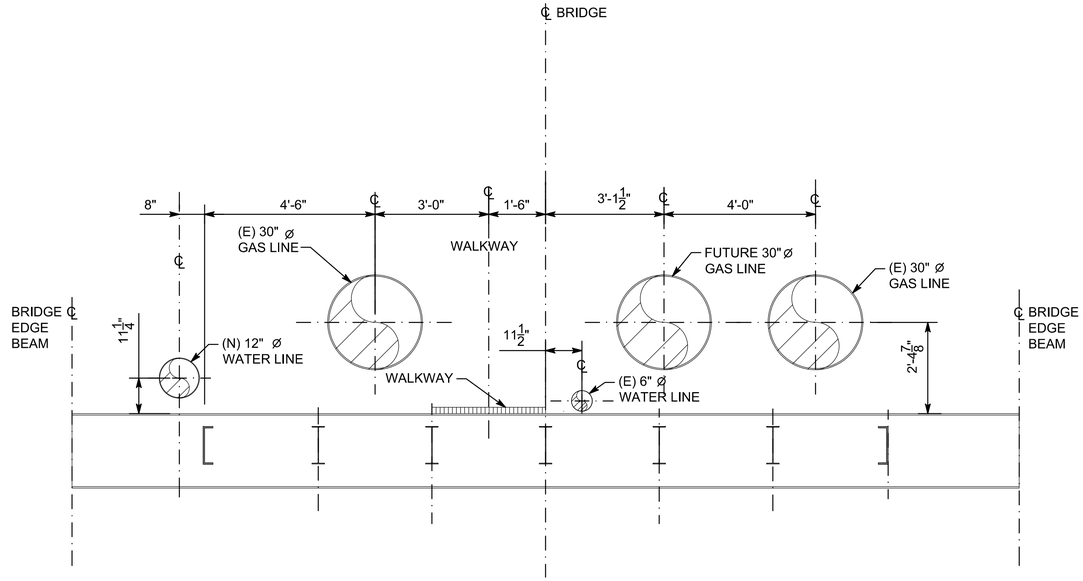

E SECTION
C-07-136 SCALE: 1/2" = 1'-0"
C-07-29

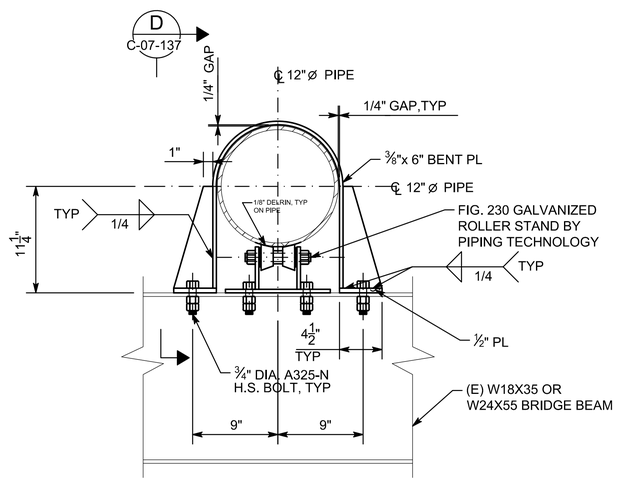

B SECTION
C-07-136 SCALE: 1 1/2" = 1'-0"

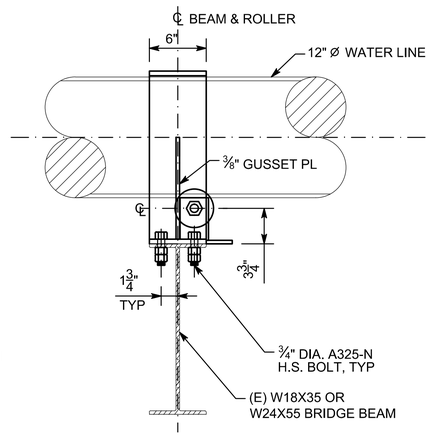

NOTE: SEE SECTION C FOR ROLLER SUPPORT CONNECTION TO (E) BRIDGE BEAM.

D SECTION
C-07-136 SCALE: 1 1/2" = 1'-0"

TYPE-2 SUPPORT

- FINAL DESIGN - FOR AGENCY APPROVAL ONLY

REGISTERED PROFESSIONAL ENGINEER BENJAMIN J. WUERL C 67811 EXP 6/30/17 CIVIL STATE OF CALIFORNIA

ETIC ENGINEERING

ARCADIS

NO.	DATE	DESCRIPTION	GM/SPEC	DWN	CHKD	SUPV	APVD BY
1	11/18/15	FINAL DESIGN		AJW	WLM	BW	RAO
0	9/8/14	PRE-FINAL (90%) DESIGN					

REVISIONS

APPROVED BY: RAO

SO | SUPV | DSGN | DWN | CHKD | OK | DATE | SCALES

TOPOCK GROUNDWATER REMEDIATION PROJECT
STRUCTURE SECTIONS
SUPPORT 12" WATER LINE
TOPOCK L300-A-ARCH BRIDGE
GAS TRANSMISSION & DISTRIBUTION
PACIFIC GAS AND ELECTRIC COMPANY
SAN FRANCISCO, CALIFORNIA

MICROFILM | BILL OF MATL | DWG LIST | SUPSDS | SUPSD BY

SHEET NO. C-07-137 of SHEETS | REV 1

N1B08

11/02/2015, 17:05, G:\Graphics\ART\TOPOCK-01\Submittal_100%\DWGs\C-Civil\C-07-137.dwg, Tab: C-07-137

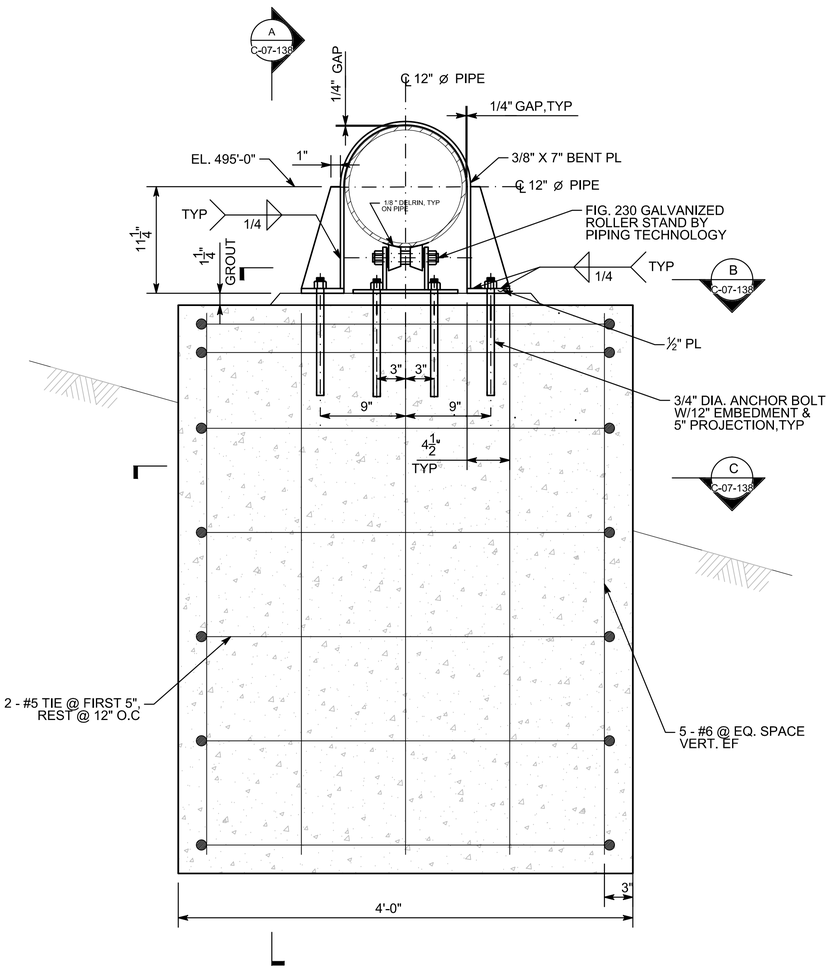

1 PS-1 SUPPORT DETAIL

1 1/2"=1'-0"

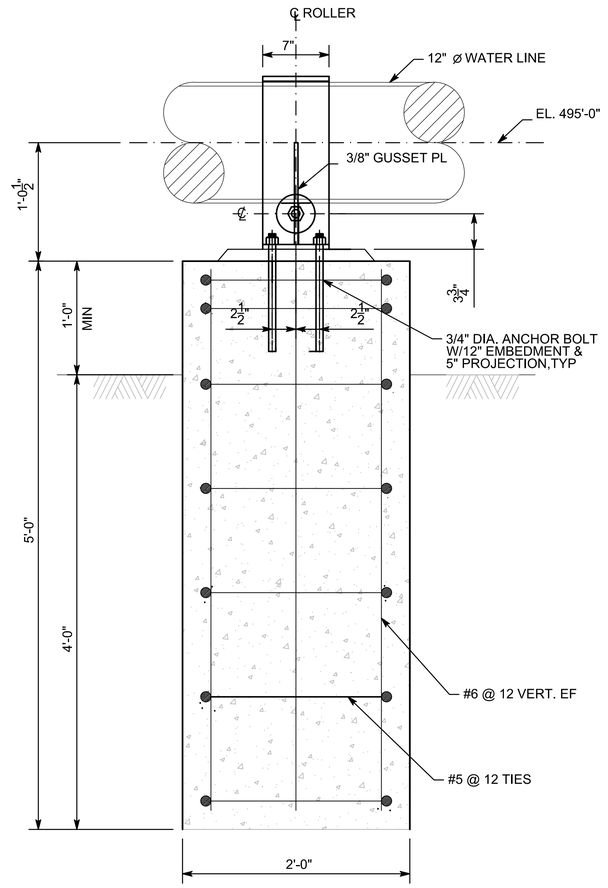

A DETAIL

1 1/2"=1'-0"

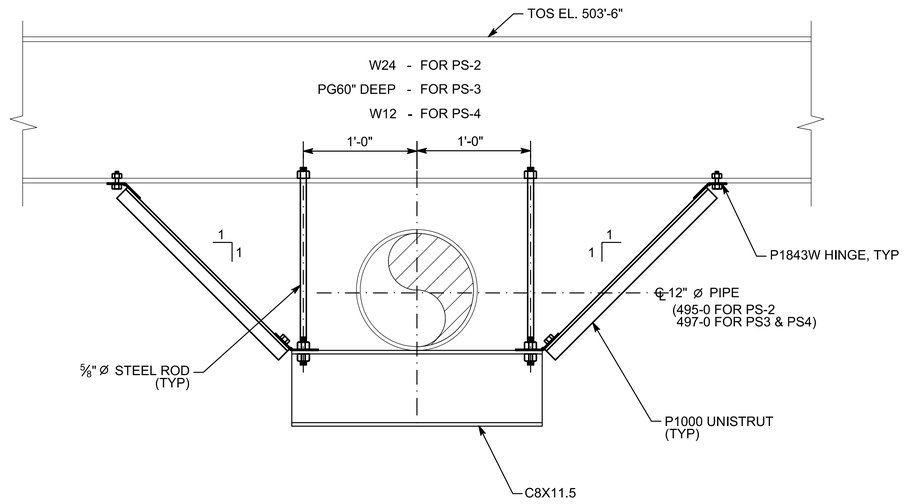

2 PS-2, PS-3, PS-4 DETAILS

NTS

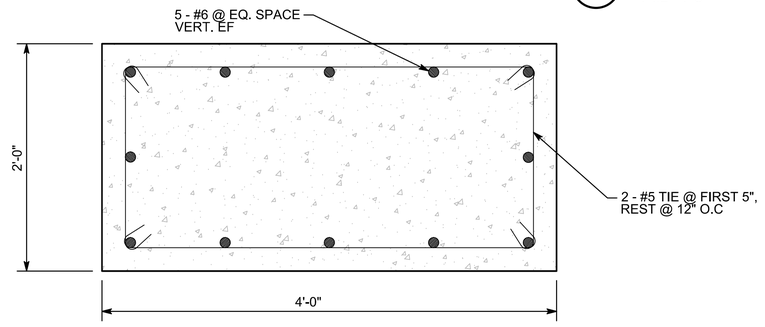

C SECTION

1 1/2"=1'-0"

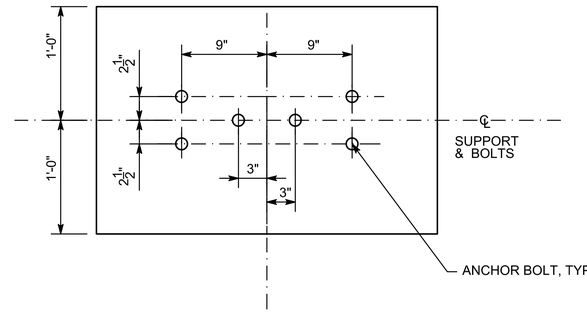

B SECTION

1 1/2"=1'-0"

- FINAL DESIGN - FOR AGENCY APPROVAL ONLY

REGISTERED PROFESSIONAL ENGINEER BENJAMIN J. WUDEL C 67811 EXP 6/30/17 STATE OF CALIFORNIA

ETIC ENGINEERING

ARCADIS

NO.	DATE	DESCRIPTION	GM/SPEC	DWN	CHKD	SUPV	APVD BY
1	11/18/15	FINAL DESIGN		AJW	WLM	BW	RAO
0	9/8/14	PRE-FINAL (90%) DESIGN					

REVISIONS

APPROVED BY: RAO

SO | SUPV | DSGN | DWN | CHKD | OK | DATE | SCALES

TOPOCK GROUNDWATER REMEDIATION PROJECT

STRUCTURE SECTIONS SUPPORT 12" WATER LINE TOPOCK L300-A-ARCH BRIDGE

GAS TRANSMISSION & DISTRIBUTION

PACIFIC GAS AND ELECTRIC COMPANY
SAN FRANCISCO, CALIFORNIA

MICROFILM | BILL OF MATL | DWG LIST | SUPSDS | SUPSD BY

SHEET NO. C-07-138 of SHEETS | REV 1

11/02/2015, 17:05, G:\Graphics\ART\TOPOCK-01\Submittal_100%\DWGs\C-Civil\C-07-138.dwg, Tab: C-07-138

N1B08

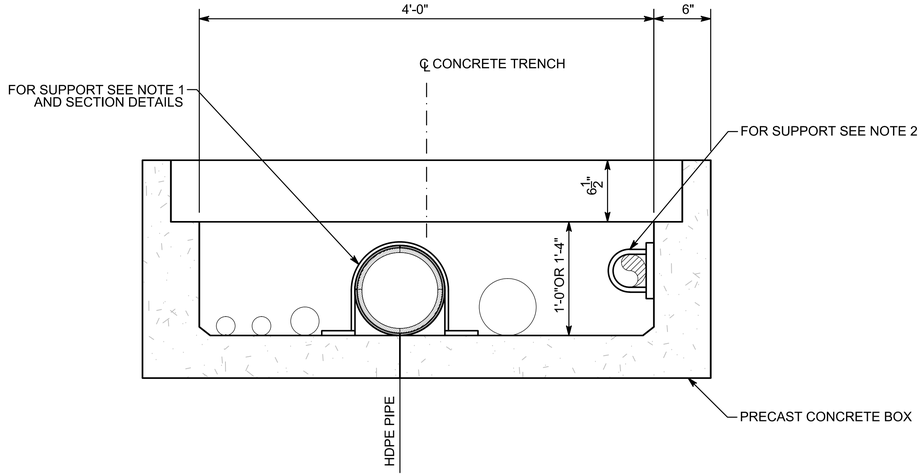

A TYPICAL CONCRETE TRENCH SECTION

1 1/2"=1'-0"

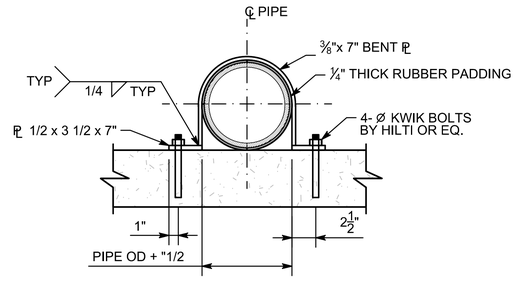

B PIPE SUPPORT SECTION

1 1/2"=1'-0"

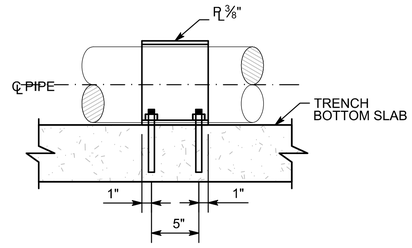

C PIPE SUPPORT ELEVATION

1 1/2"=1'-0"

NOTES:

1. ALL SUPPORTS FOR 3" Ø AND LARGER ARE @ 50' C/C SPACING, FOR PIPE LESS THAN 3" Ø ARE @ 200' C/C SPACING. FOR SUPPORTS (USE TZ-CS 5/8" Ø X 4" FOR 8" Ø PIPE, AND TZ-CS 1/2" Ø X 3-1/4" FOR OTHERS).
2. SUPPORTS FOR 4"-480V & 4" F.O. ARE @ 20' C/C SPACING (USE HOLD DOWN PIPE CLAMS PTP FIG HD-1 PIPING TECHNOLOGY PRODUCTS OR EQ. WITH 1/2" Ø TZ-CS 3-1/4" LG ANCHORS).
3. STAGGER SUPPORTS TO PREVENT A WEAKENED PLANE ACROSS THE PIPE TRENCH.

- FINAL DESIGN - FOR AGENCY APPROVAL ONLY

REGISTERED PROFESSIONAL ENGINEER BENJAMIN J. WUERFL C 67811 EXP 6/30/17 CIVIL STATE OF CALIFORNIA

ETIC ENGINEERING

ARCADIS

NO.	DATE	DESCRIPTION	GM/SPEC	DWN	CHKD	SUPV	APVD BY
1	11/18/15	FINAL DESIGN	AJW	WLM	BW	RAO	
0	9/8/14	PRE-FINAL (90%) DESIGN					

REVISIONS

APPROVED BY	
RAO	SO
	SUPV
	DSGN
	DWN
	CHKD
	OK
	DATE
	SCALES

TOPOCK GROUNDWATER REMEDIATION PROJECT

PIPE SUPPORT DETAILS

GAS TRANSMISSION & DISTRIBUTION
PACIFIC GAS AND ELECTRIC COMPANY
SAN FRANCISCO, CALIFORNIA

MICROFILM	
BILL OF MATL	
DWG LIST	
SUPSDS	
SUPSD BY	
SHEET NO.	of SHEETS
C-07-139	REV 1

N1808

11/02/2015, 17:06, G:\Graphics\AR\TOPOCK-01\Submittal_100%\DWGs\C-Civil\C-07-139.dwg, Tab: C-07-139

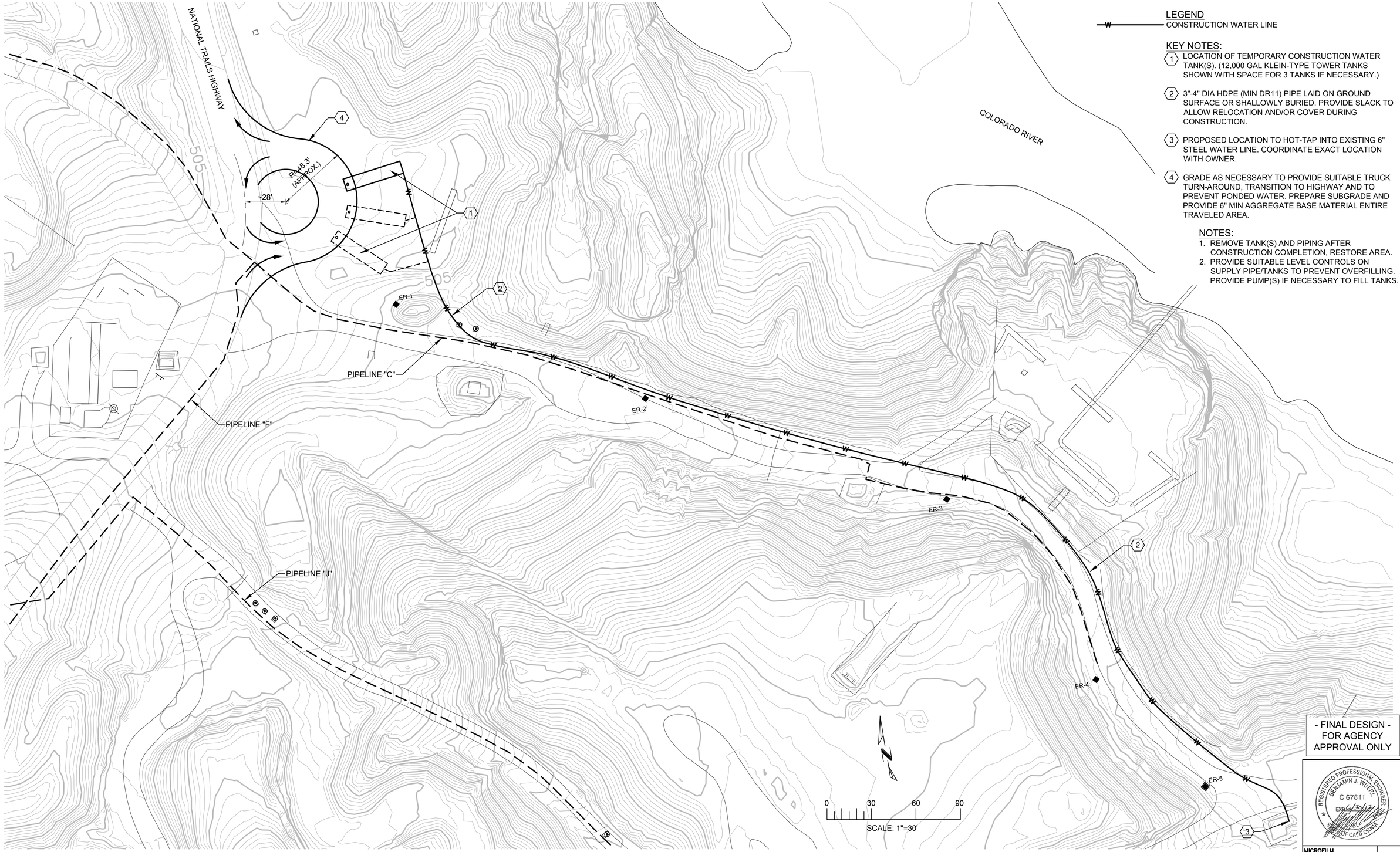

LEGEND

W — CONSTRUCTION WATER LINE

KEY NOTES:

1. LOCATION OF TEMPORARY CONSTRUCTION WATER TANK(S). (12,000 GAL KLEIN-TYPE TOWER TANKS SHOWN WITH SPACE FOR 3 TANKS IF NECESSARY.)
2. 3"-4" DIA HDPE (MIN DR11) PIPE LAID ON GROUND SURFACE OR SHALLOWLY BURIED. PROVIDE SLACK TO ALLOW RELOCATION AND/OR COVER DURING CONSTRUCTION.
3. PROPOSED LOCATION TO HOT-TAP INTO EXISTING 6" STEEL WATER LINE. COORDINATE EXACT LOCATION WITH OWNER.
4. GRADE AS NECESSARY TO PROVIDE SUITABLE TRUCK TURN-AROUND, TRANSITION TO HIGHWAY AND TO PREVENT PONDED WATER. PREPARE SUBGRADE AND PROVIDE 6" MIN AGGREGATE BASE MATERIAL ENTIRE TRAVELED AREA.

NOTES:

1. REMOVE TANK(S) AND PIPING AFTER CONSTRUCTION COMPLETION, RESTORE AREA.
2. PROVIDE SUITABLE LEVEL CONTROLS ON SUPPLY PIPE/TANKS TO PREVENT OVERFILLING. PROVIDE PUMP(S) IF NECESSARY TO FILL TANKS.

- FINAL DESIGN - FOR AGENCY APPROVAL ONLY

REGISTERED PROFESSIONAL ENGINEER
BENJAMIN J. WUEBEL
C 67811
EXP 6/30/17
STATE OF CALIFORNIA

ETIC ENGINEERING

ARCADIS

NO.	DATE	DESCRIPTION	GM/SPEC	DWN	CHKD	SUPV	APVD BY
1	11/18/15	FINAL DESIGN	AJW	WLM	BW	RAO	
0	09/08/14	PRE-FINAL (90%) DESIGN	RV	NB	CH	NB	

REVISIONS

APPROVED BY	SO
RAO	SUPV
	DSGN
	DWN
	CHKD
	OK
	DATE
	SCALES

TOPOCK GROUNDWATER REMEDIATION PROJECT

TEMPORARY CONSTRUCTION WATER LINE SYSTEM

GAS TRANSMISSION & DISTRIBUTION
PACIFIC GAS AND ELECTRIC COMPANY
SAN FRANCISCO, CALIFORNIA

MICROFILM	
BILL OF MATL	
DWG LIST	
SUPSDS	
SUPSD BY	
SHEET NO.	of SHEETS
C-07-200	REV 1

N1808

11/02/2015, 17:10, G:\Graphics\ARITOPOCK-01\Submittal_100%\DWGs\C-Civil\C-07-200.dwg, Tab: C-07-200

ROADWAY DRAINAGE IMPROVEMENT EARTHWORK

EXISTING GROUND SURFACE VS ROADWAY DESIGN SURFACE
EXPANSION/SHRINKAGE FACTOR: 1.0

CUT: 5 BANK CUBIC YARDS
FILL: 1,660 COMPACTED CUBIC YARDS
NET: 1,665 CUBIC YARDS

VOLUMES SHOWN ARE APPROXIMATE AND PROVIDED FOR INFORMATIONAL PURPOSES ONLY. CHECK VOLUMES BEFORE USE IN ESTIMATING OR CONSTRUCTION.

0 30 60
SCALE: 1"=30'

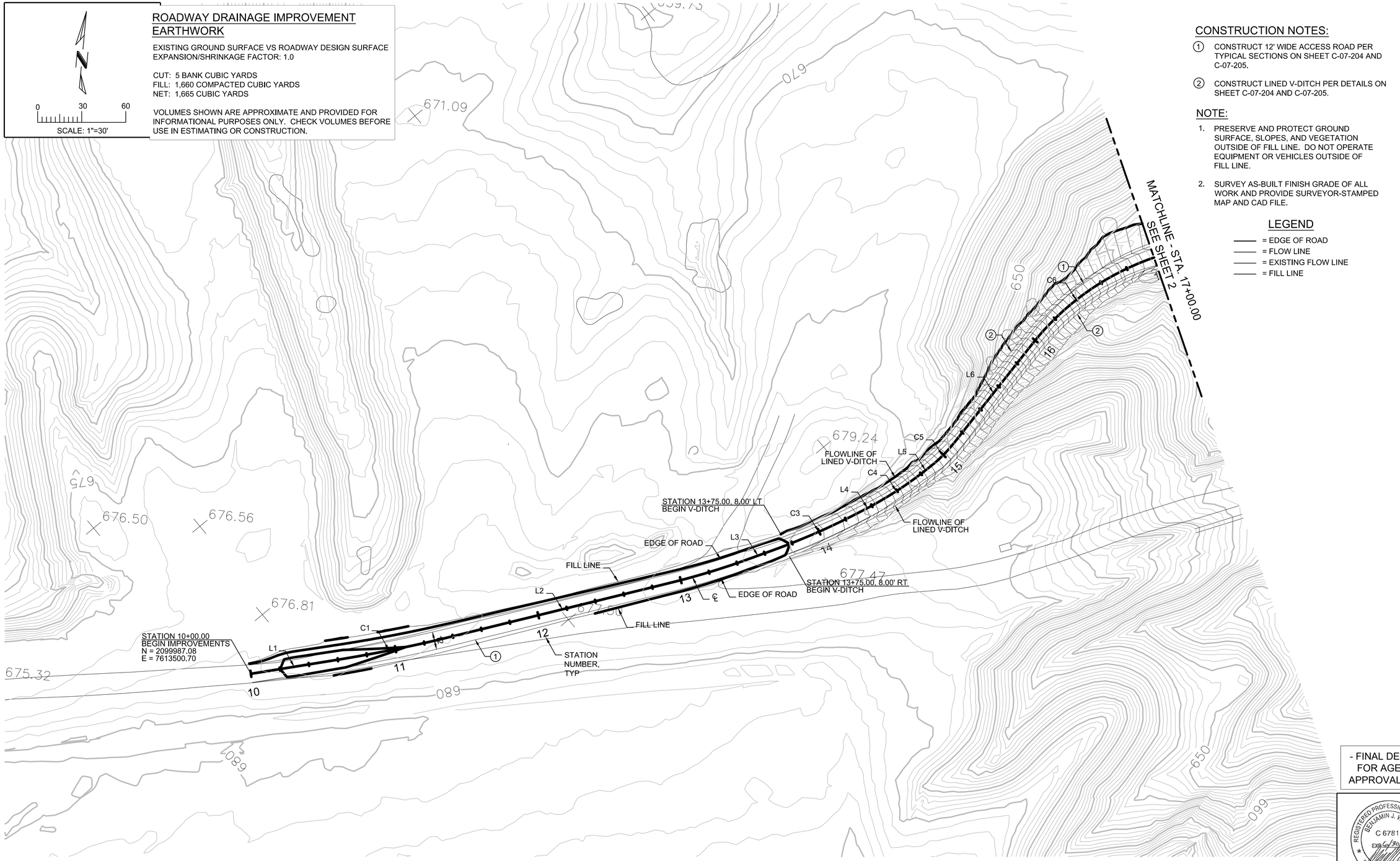

CONSTRUCTION NOTES:

1. CONSTRUCT 12' WIDE ACCESS ROAD PER TYPICAL SECTIONS ON SHEET C-07-204 AND C-07-205.
2. CONSTRUCT LINED V-DITCH PER DETAILS ON SHEET C-07-204 AND C-07-205.

NOTE:

1. PRESERVE AND PROTECT GROUND SURFACE, SLOPES, AND VEGETATION OUTSIDE OF FILL LINE. DO NOT OPERATE EQUIPMENT OR VEHICLES OUTSIDE OF FILL LINE.
2. SURVEY AS-BUILT FINISH GRADE OF ALL WORK AND PROVIDE SURVEYOR-STAMPED MAP AND CAD FILE.

LEGEND

——— = EDGE OF ROAD
——— = FLOW LINE
——— = EXISTING FLOW LINE
——— = FILL LINE

- FINAL DESIGN -
FOR AGENCY
APPROVAL ONLY

REGISTERED PROFESSIONAL ENGINEER
BENJAMIN J. WUSEL
C 67811
EXP 6/30/17
CIVIL
STATE OF CALIFORNIA

ETIC ENGINEERING
ARCADIS

NO.	DATE	DESCRIPTION	GM/SPEC	DWN	CHKD	SUPV	APVD BY
1	11/18/15	FINAL DESIGN	AJW	WLM	BW	RAO	
0	09/08/14	PRE-FINAL (90%) DESIGN	RV	NB	CH	NB	

REVISIONS

APPROVED BY	SO
RAO	SUPV
	DSGN
	DWN
	CHKD
	OK
	DATE
	SCALES

TOPOCK GROUNDWATER REMEDIATION PROJECT
PIPELINE
ROADWAY DRAINAGE
IMPROVEMENTS
GAS TRANSMISSION & DISTRIBUTION
PACIFIC GAS AND ELECTRIC COMPANY
SAN FRANCISCO, CALIFORNIA

MICROFILM	
BILL OF MATL	
DWG LIST	
SUPSDS	
SUPSD BY	
SHEET NO.	of SHEETS
C-07-201	REV 1

11/02/2015, 17:10, G:\Graphics\ARI\TOPOCK-01\Submittal_100%\DWG\stC-Civil\C-07-201.dwg, Tab: C-07-201

N1808

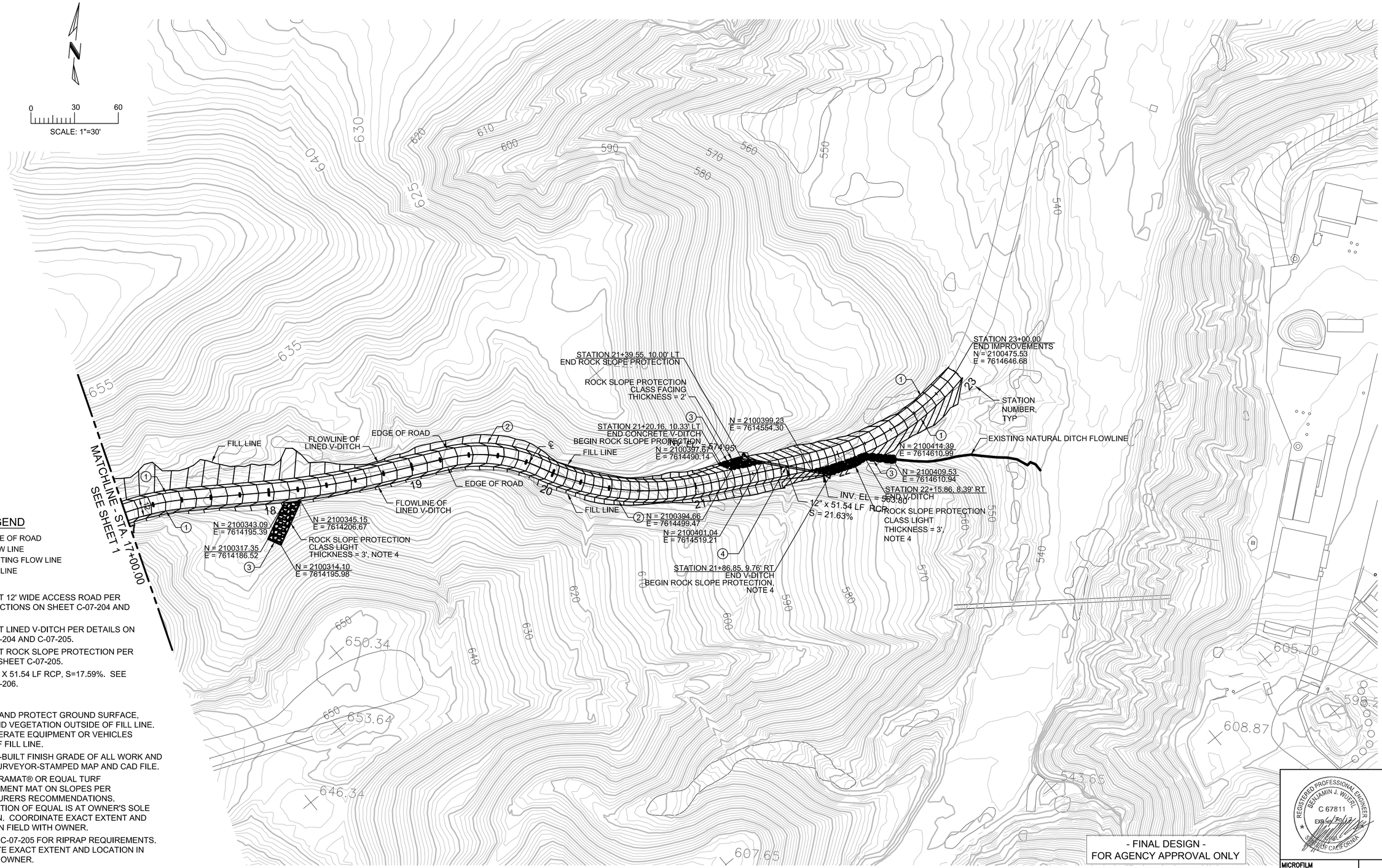

LEGEND

——— = EDGE OF ROAD
——— = FLOW LINE
——— = EXISTING FLOW LINE
——— = FILL LINE

NOTES:

① CONSTRUCT 12' WIDE ACCESS ROAD PER TYPICAL SECTIONS ON SHEET C-07-204 AND C-07-205.

② CONSTRUCT LINED V-DITCH PER DETAILS ON SHEET C-07-204 AND C-07-205.

③ CONSTRUCT ROCK SLOPE PROTECTION PER DETAIL ON SHEET C-07-205.

④ INSTALL 12" X 51.54 LF RCP, S=17.59%. SEE SHEET C-07-206.

NOTES:

1. PRESERVE AND PROTECT GROUND SURFACE, SLOPES, AND VEGETATION OUTSIDE OF FILL LINE. DO NOT OPERATE EQUIPMENT OR VEHICLES OUTSIDE OF FILL LINE.
2. SURVEY AS-BUILT FINISH GRADE OF ALL WORK AND PROVIDE SURVEYOR-STAMPED MAP AND CAD FILE.
3. INSTALL PYRAMAT® OR EQUAL TURF REINFORCEMENT MAT ON SLOPES PER MANUFACTURERS RECOMMENDATIONS. DETERMINATION OF EQUAL IS AT OWNER'S SOLE DISCRETION. COORDINATE EXACT EXTENT AND LOCATION IN FIELD WITH OWNER.
4. SEE SHEET C-07-205 FOR RIPRAP REQUIREMENTS. COORDINATE EXACT EXTENT AND LOCATION IN FIELD WITH OWNER.

- FINAL DESIGN -
FOR AGENCY APPROVAL ONLY

REGISTERED PROFESSIONAL ENGINEER
BENJAMIN J. WUERL
C 67811
EXP. 6/30/17
STATE OF CALIFORNIA

ETIC ENGINEERING
ARCADIS

NO.	DATE	DESCRIPTION	GM/SPEC	DWN	CHKD	SUPV	APVD BY
1	11/18/15	FINAL DESIGN	AJW	WLM	BW	RAO	
0	09/08/14	PRE-FINAL (90%) DESIGN	RV	NB	CH	NB	

REVISIONS

APPROVED BY	
RAO	SO
	SUPV
	DSGN
	DWN
	CHKD
	OK
	DATE
	SCALES

TOPOCK GROUNDWATER REMEDIATION PROJECT

PIPELINE ROADWAY DRAINAGE IMPROVEMENTS

GAS TRANSMISSION & DISTRIBUTION
PACIFIC GAS AND ELECTRIC COMPANY
SAN FRANCISCO, CALIFORNIA

MICROFILM	
BILL OF MATL	
DWG LIST	
SUPSDS	
SUPSD BY	
SHEET NO. of SHEETS	
C-07-202	REV 1

11/02/2015, 17:11, G:\Graphics\AR\TOPOCK-011Submittal_100%\DWGs\C-Civil\C-07-202.dwg, Tab: C-07-202

N1808

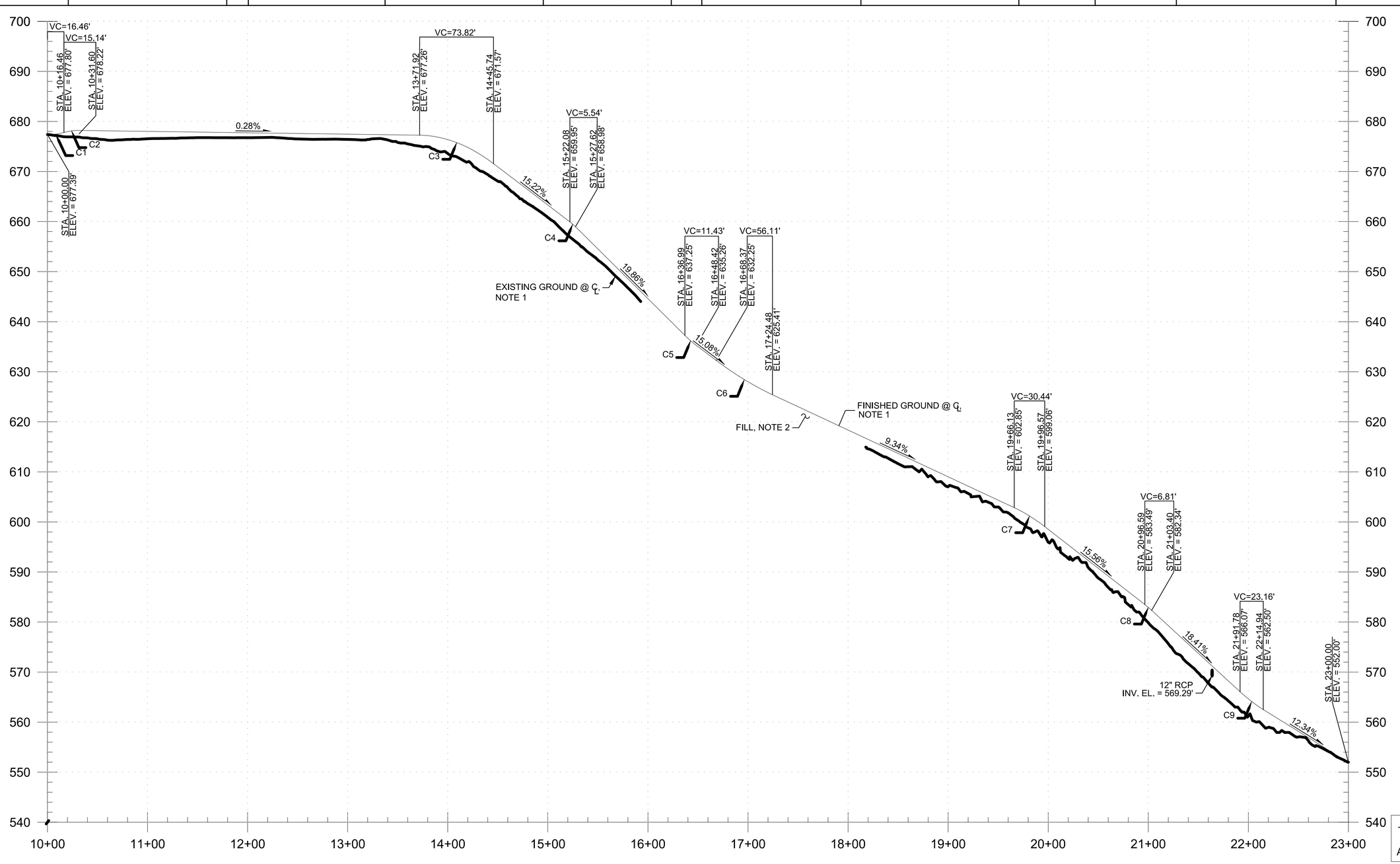

- FINAL DESIGN -
FOR AGENCY APPROVAL ONLY

NOTES:

1. REFER TO DWGS C-07-201 AND C-07-202 FOR PLAN VIEW.
2. REFER TO DWGS C-07-204 AND C-07-205 FOR SECTION VIEW.

SCALE

HORIZONTAL: 1" = 50'
VERTICAL: 1" = 5'

REGISTERED PROFESSIONAL ENGINEER
BENJAMIN J. WUSEL
C 67811
EXP 6/30/17
STATE OF CALIFORNIA

ETIC ENGINEERING

ARCADIS

NO.	DATE	DESCRIPTION	GM/SPEC	DWN	CHKD	SUPV	APVD BY
1	11/18/15	FINAL DESIGN		AJW	WLM	BW	RAO
0	09/08/14	PRE-FINAL (90%) DESIGN		RV	NB	CH	NB

REVISIONS

APPROVED BY	SO
RAO	SUPV
	DSGN
	DWN
	CHKD
	OK
	DATE
	SCALES

TOPOCK GROUNDWATER REMEDIATION PROJECT

PIPELINE PROFILE

GAS TRANSMISSION & DISTRIBUTION
PACIFIC GAS AND ELECTRIC COMPANY
SAN FRANCISCO, CALIFORNIA

MICROFILM	
BILL OF MATL	
DWG LIST	
SUPSDS	
SUPSD BY	
SHEET NO. of SHEETS	
C-07-203	REV 1

N1808

11/02/2015, 17:11, G:\Graphics\ARI\TOPOCK-01\Submittal_100%\DWGs\C-Civil\C-07-203.dwg, Tab: C-07-203

NOTES:

1. CLASS 2. MATERIAL AND INSTALLATION PER CALTRANS STANDARD SPECIFICATIONS, SECTION 26, EXCEPT THAT RECLAIMED ASPHALT CONCRETE, PORTLAND CEMENT CONCRETE, LEAN CONCRETE BASE, AND CEMENT TREATED BASE ARE PROHIBITED AS AGGREGATES WITHOUT OWNER'S PRIOR APPROVAL.
2. TAN-COLORED REINFORCED CONCRETE DITCH LINING. MATERIAL AND INSTALLATION PER CALTRANS STANDARD SPECIFICATIONS, SECTION 72-5.
3. PRESERVE AND PROTECT GROUND SURFACE, SLOPES, AND VEGETATION OUTSIDE OF FILL LINE. DO NOT OPERATE EQUIPMENT OR VEHICLES OUTSIDE OF FILL LINE.
4. PREPARE SUBGRADE UNDER FILL.

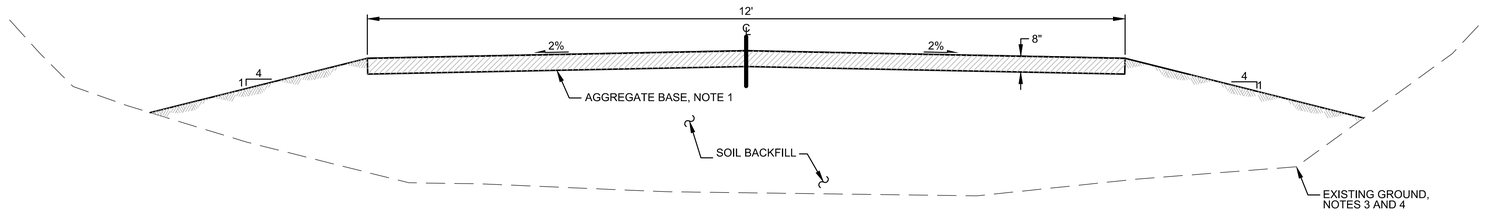

10+00.00 TO 13+75.00 (LOOKING EAST AND DOWNHILL)

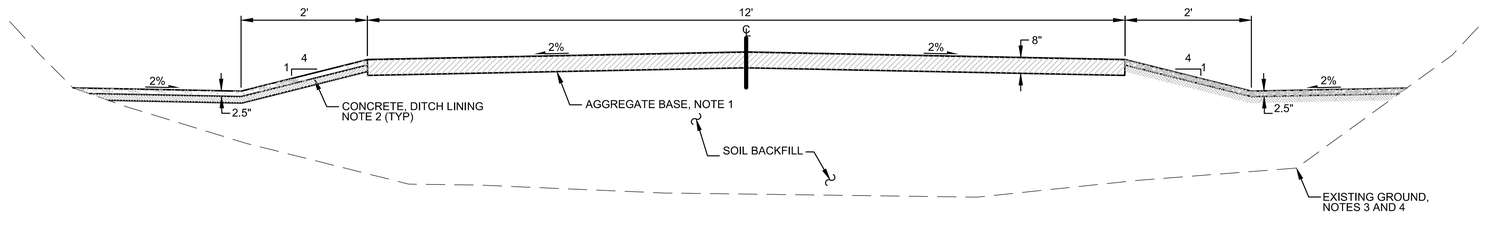

13+75.00 TO 21+34.63 (LOOKING EAST AND DOWNHILL)

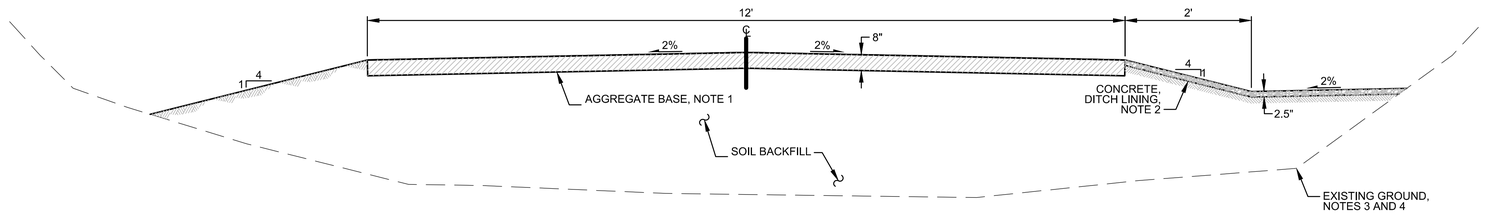

21+34.63 TO 21+91.38 (LOOKING EAST AND DOWNHILL)

- FINAL DESIGN - FOR AGENCY APPROVAL ONLY

SCALE

HORIZONTAL: 1" = 1'
VERTICAL: NTS

REGISTERED PROFESSIONAL ENGINEER BENJAMIN J. WUERL C 67811 EXP 6/30/17 CIVIL STATE OF CALIFORNIA

ETIC ENGINEERING

ARCADIS

NO.	DATE	DESCRIPTION	GM/SPEC	DWN	CHKD	SUPV	APVD BY
1	11/18/15	FINAL DESIGN	AJW	WLM	BW	RAO	
0	09/08/14	PRE-FINAL (90%) DESIGN	RV	NB	CH	NB	

REVISIONS

APPROVED BY	
RAO	SO
	SUPV
	DSGN
	DWN
	CHKD
	OK
	DATE
	SCALES

TOPOCK GROUNDWATER REMEDIATION PROJECT

PIPELINE TYPICAL SECTIONS

GAS TRANSMISSION & DISTRIBUTION
PACIFIC GAS AND ELECTRIC COMPANY
SAN FRANCISCO, CALIFORNIA

MICROFILM	
BILL OF MATL	
DWG LIST	
SUPSDS	
SUPSD BY	
SHEET NO.	of SHEETS
C-07-204	REV 1

11/02/2015, 17:11, G:\Graphics\ARITOPOCK-01\Submittal_100%\DWGs\C-Civil\C-07-204.dwg, Tab: C-07-204

N1808

NOTES:

1. CLASS 2. MATERIAL AND INSTALLATION PER CALTRANS STANDARD SPECIFICATIONS, SECTION 26, EXCEPT THAT RECLAIMED ASPHALT CONCRETE, PORTLAND CEMENT CONCRETE, LEAN CONCRETE BASE, AND CEMENT TREATED BASE ARE PROHIBITED AS AGGREGATES WITHOUT OWNER'S PRIOR APPROVAL.
2. MATERIAL AND METHOD B PLACEMENT PER CALTRANS STANDARD SPECIFICATIONS, SECTION 72-2. SEE PLAN SHEETS FOR CLASS AND THICKNESS.
3. PRESERVE AND PROTECT GROUND SURFACE, SLOPES, AND VEGETATION OUTSIDE OF FILL LINE. DO NOT OPERATE EQUIPMENT OR VEHICLES OUTSIDE OF FILL LINE.
4. PREPARE SUBGRADE UNDER FILL.

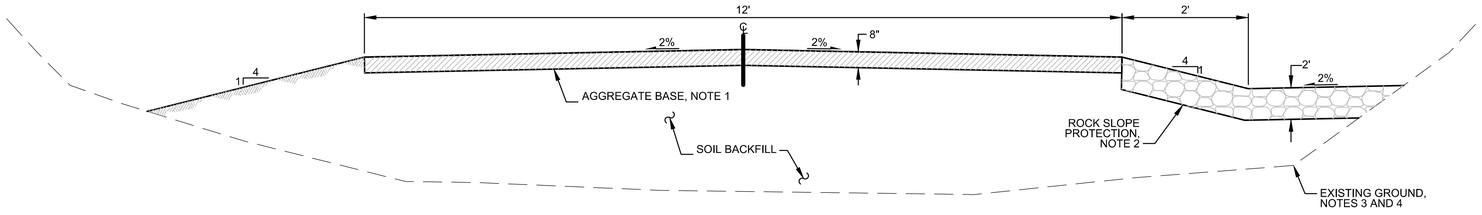

21+91.38 TO 22+15.86 (LOOKING EAST AND DOWNHILL)

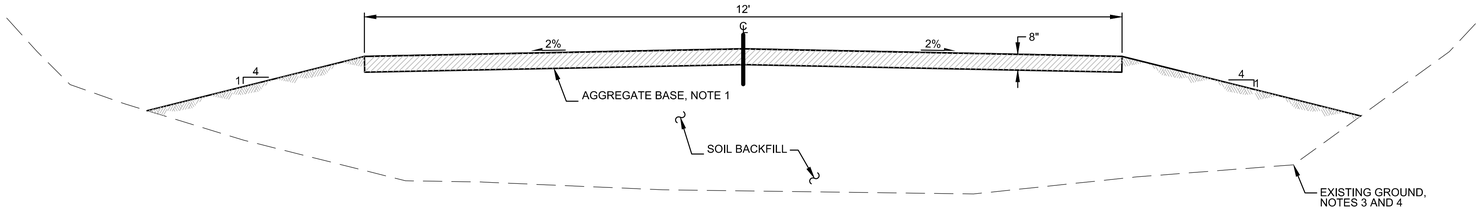

22+15.86 TO 23+00.00 (LOOKING EAST AND DOWNHILL)

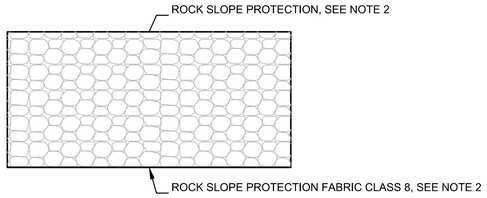

ROCK SLOPE PROTECTION DETAIL
NTS

SCALE

HORIZONTAL: 1" = 1'
VERTICAL: NTS

- FINAL DESIGN - FOR AGENCY APPROVAL ONLY

REGISTERED PROFESSIONAL ENGINEER
BENJAMIN J. WUERL
C 67811
EXP 6/30/17
CIVIL
STATE OF CALIFORNIA

ETIC ENGINEERING

ARCADIS

NO.	DATE	DESCRIPTION	GM/SPEC	DWN	CHKD	SUPV	APVD BY
1	11/18/15	FINAL DESIGN	AJW	WLM	BW	RAO	
0	09/08/14	PRE-FINAL (90%) DESIGN	RV	NB	CH	NB	

REVISIONS

APPROVED BY	
RAO	SO
	SUPV
	DSGN
	DWN
	CHKD
	OK
	DATE
	SCALES

TOPOCK GROUNDWATER REMEDIATION PROJECT

PIPELINE TYPICAL SECTIONS

GAS TRANSMISSION & DISTRIBUTION
PACIFIC GAS AND ELECTRIC COMPANY
SAN FRANCISCO, CALIFORNIA

MICROFILM	
BILL OF MATL	
DWG LIST	
SUPSDS	
SUPSD BY	
SHEET NO.	of SHEETS
C-07-205	REV 1

N1808

11/02/2015, 17:12, G:\Graphics\ARTOPOCK-01\Submittal_100%\DWG\aC-Civil\C-07-205.dwg, Tab: C-07-205

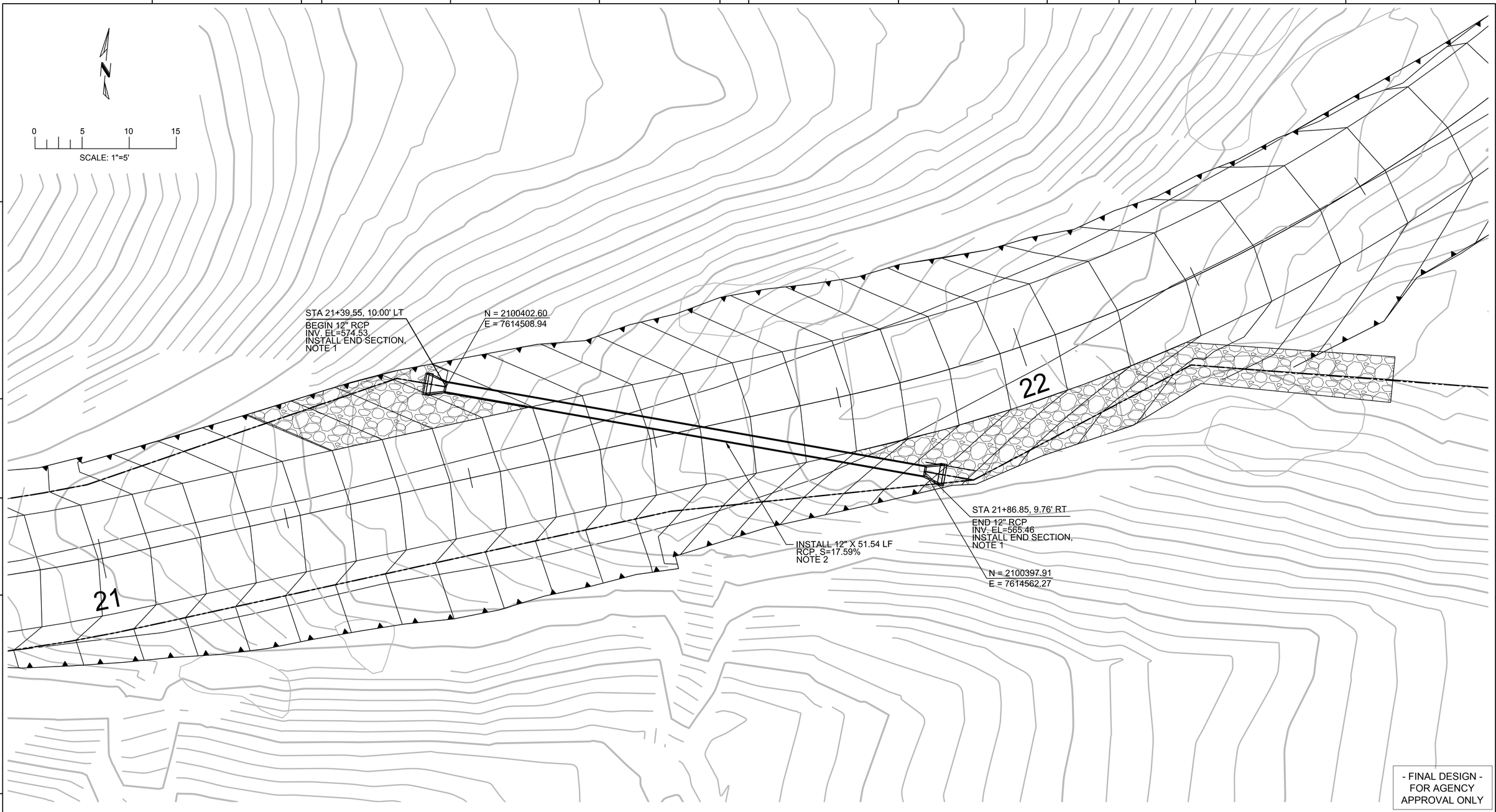

LEGEND

- EDGE OF ROAD
- FLOW LINE
- EXISTING FLOW LINE
- FILL LINE

NOTES

1. PER 2010 CALTRANS STD. PLAN D94B.
2. PER 2010 CALTRANS STD. PLAN D79, AND 2010 CALTRANS STD. SPEC. SECTION 65.

- FINAL DESIGN - FOR AGENCY APPROVAL ONLY

REGISTERED PROFESSIONAL ENGINEER
BENJAMIN J. WUERL
C 67811
EXP 6/30/17
CIVIL
STATE OF CALIFORNIA

ETIC ENGINEERING

ARCADIS

NO.	DATE	DESCRIPTION	GM/SPEC	DWN	CHKD	SUPV	APVD BY
1	11/18/15	FINAL DESIGN		AJW	WLM	BW	RAO
0	09/08/14	PRE-FINAL (90%) DESIGN		RV	NB	CH	NB

REVISIONS

APPROVED BY: RAO

SO
SUPV
DSGN
DWN
CHKD
OK
DATE
SCALES

TOPOCK GROUNDWATER REMEDIATION PROJECT

PIPELINE CULVERT PIPE CROSSING DETAIL

GAS TRANSMISSION & DISTRIBUTION
PACIFIC GAS AND ELECTRIC COMPANY
SAN FRANCISCO, CALIFORNIA

MICROFILM
BILL OF MATL
DWG LIST
SUPSDS
SUPSD BY
SHEET NO. of SHEETS
C-07-206
REV 1

N1808

11/02/2015, 17:12, G:\Graphics\ARIITOPOCK-01\Submittal_100%\DWGs\C-Civil\C-07-206.dwg, Tab: C-07-206

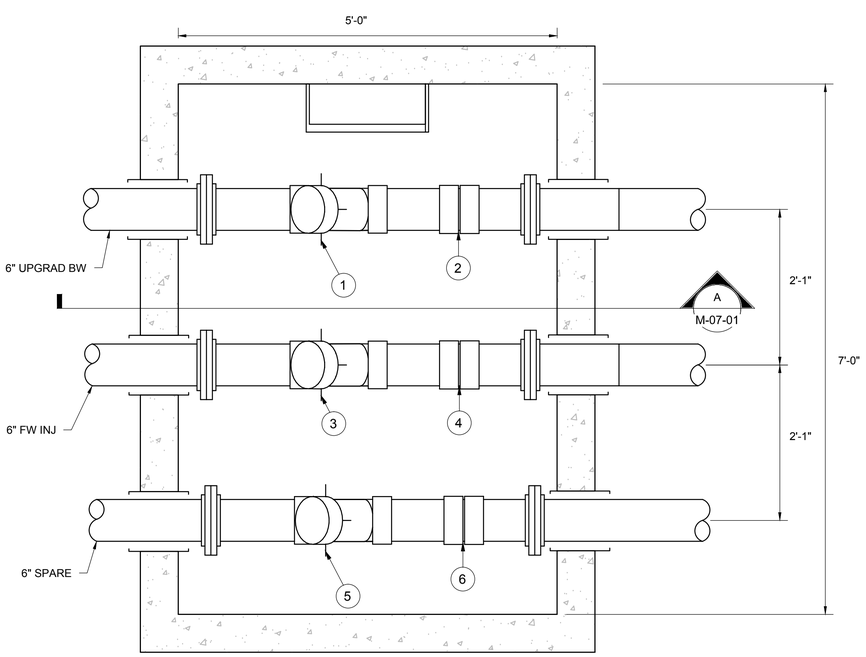

1 PIPELINE MAINTENANCE CLEANOUT VAULT 1

1"=1'-0"

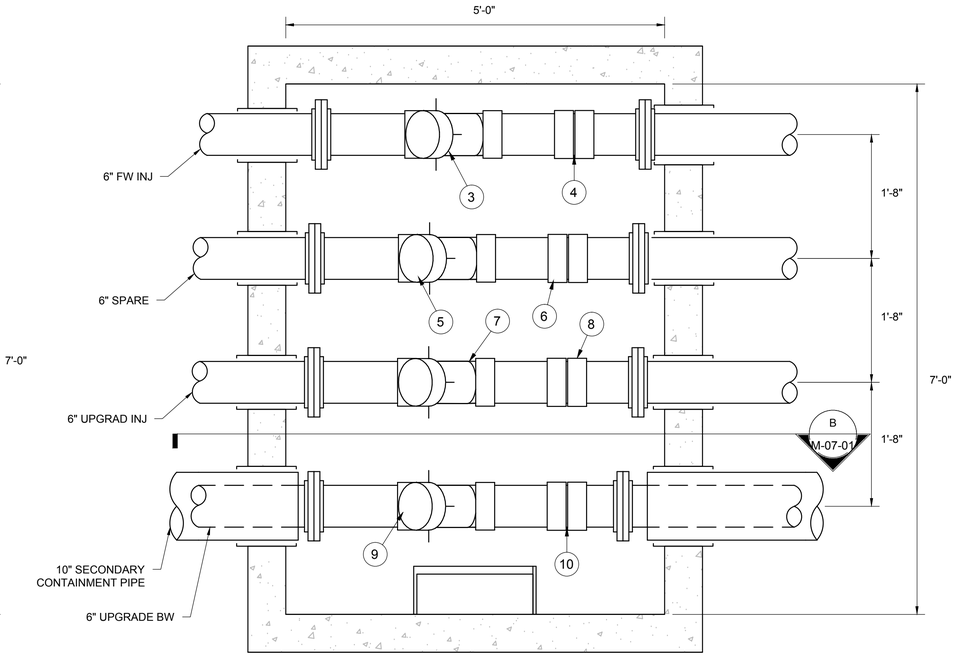

2 PIPELINE MAINTENANCE CLEANOUT VAULT 2

1"=1'-0"

LEGEND:

(1) REFERENCE ITEM # PIPELINE MAINTENANCE CLEANOUT VAULT SCHEDULE ABOVE.

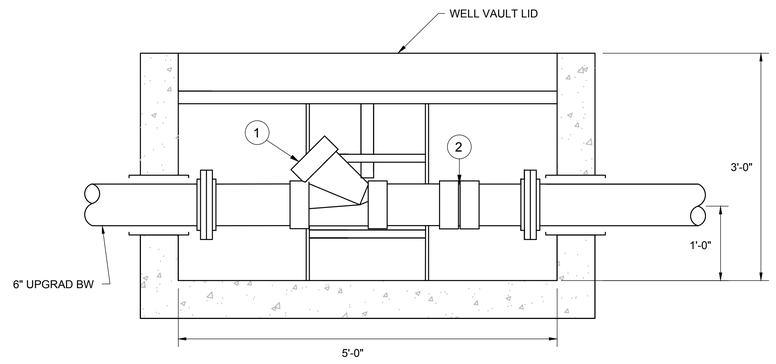

A SECTION

M-07-01

1"=1'-0"

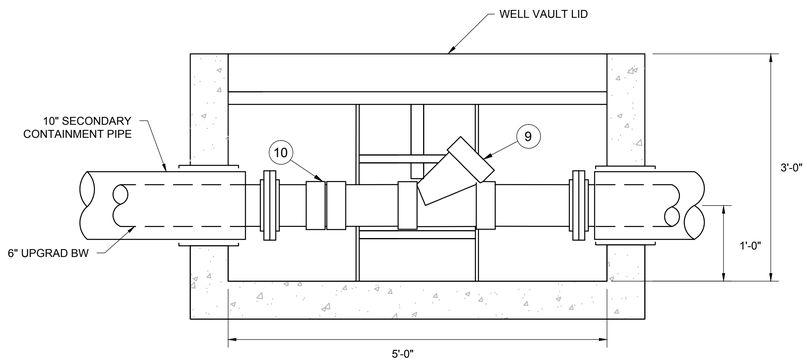

B SECTION

M-07-01

1"=1'-0"

0 1 2 3

SCALE: 1"=1'

PIPELINE MAINTENANCE CLEANOUT VAULT SCHEDULE

ITEM	PIPE SIZE	MATERIAL	PROCESS FLOW	PIPE ID	DESCRIPTION	TAG ID
1	6"	PVC	BACKWASH WATER	3	CLEANOUT WYE	-----
2	6"	PVC	BACKWASH WATER	3	UNION	-----
3	6"	PVC	FRESH WATER	1	CLEANOUT WYE	-----
4	6"	PVC	FRESH WATER	1	UNION	-----
5	6"	PVC	SPARE	-----	CLEANOUT WYE	-----
6	6"	PVC	SPARE	-----	UNION	-----
7	6"	PVC	FRESH WATER	2	CLEANOUT WYE	-----
8	6"	PVC	FRESH WATER	2	UNION	-----
9	6"	PVC	BACKWASH WATER	15	CLEANOUT WYE	-----
10	6"	PVC	BACKWASH WATER	15	UNION	-----

REGISTERED PROFESSIONAL ENGINEER BENJAMIN J. WUERL C 67811 EXP 6/30/17 CIVIL STATE OF CALIFORNIA

- FINAL DESIGN - FOR AGENCY APPROVAL ONLY

ETIC ENGINEERING

ARCADIS

NO.	DATE	DESCRIPTION	GM/SPEC	DWN	CHKD	SUPV	APVD BY
0	11/18/15	FINAL DESIGN	AJW	KLD	BW	RAO	

REVISIONS

APPROVED BY	
RAO	SO
	SUPV
	DSGN
	DWN
	CHKD
	OK
	DATE
	SCALES

TOPOCK GROUNDWATER REMEDIATION PROJECT

PIPELINE MAINTENANCE MECHANICAL DETAILS

GAS TRANSMISSION & DISTRIBUTION

PACIFIC GAS AND ELECTRIC COMPANY

SAN FRANCISCO, CALIFORNIA

MICROFILM	
BILL OF MATL	
DWG LIST	
SUPSDS	
SUPSD BY	
SHEET NO. of SHEETS	
M-07-01	REV 0

N1808

11/03/2015, 10:46, G:\Graphics\ART\TOPOCK-011Submittal_100%\DWGs\M-Mechanical\M-07-01.dwg, Tab: M-07-01

LEGEND:

(1) REFERENCE ITEM # PIPELINE MAINTENANCE CLEANOUT VAULT SCHEDULE ABOVE.

PIPELINE MAINTENANCE CLEANOUT VAULT SCHEDULE

ITEM	PIPE SIZE	MATERIAL	PROCESS FLOW	PIPE ID	DESCRIPTION	TAG ID
1	6"	PVC	EXTRACTED GROUNDWATER	6	CLEANOUT WYE	----
2	6"	PVC	EXTRACTED GROUNDWATER	6	UNION	----
3	4"	PVC	INJECTION WATER	1	CLEANOUT WYE	----
4	4"	PVC	INJECTION WATER	1	UNION	----
5	2"	PVC	BACKWASH WATER	----	CLEANOUT WYE	----
6	2"	PVC	BACKWASH WATER	----	UNION	----
7	6"	PVC	SPARE	2	CLEANOUT WYE	----
8	6"	PVC	SPARE	2	UNION	----

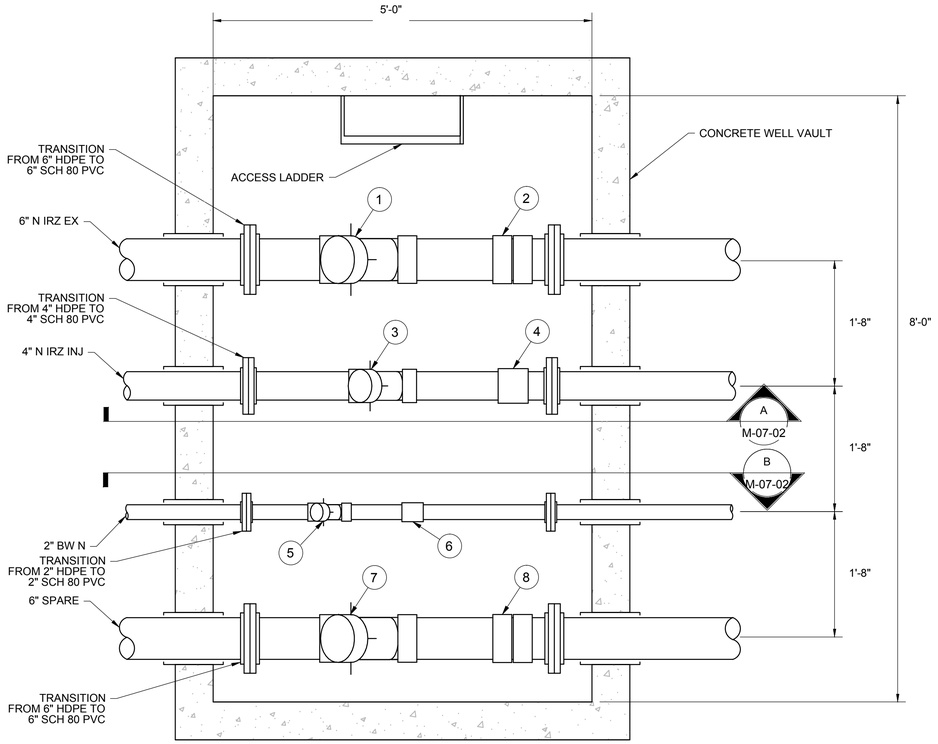

1 PIPELINE MAINTENANCE CLEANOUT VAULT 3
1"=1'-0"

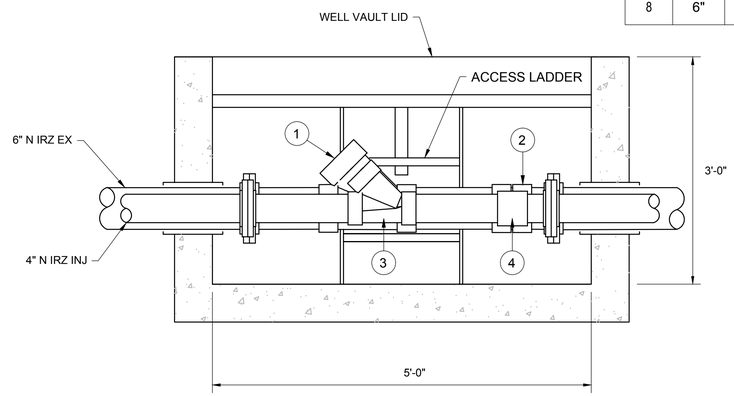

A SECTION
1"=1'-0"
M-07-02

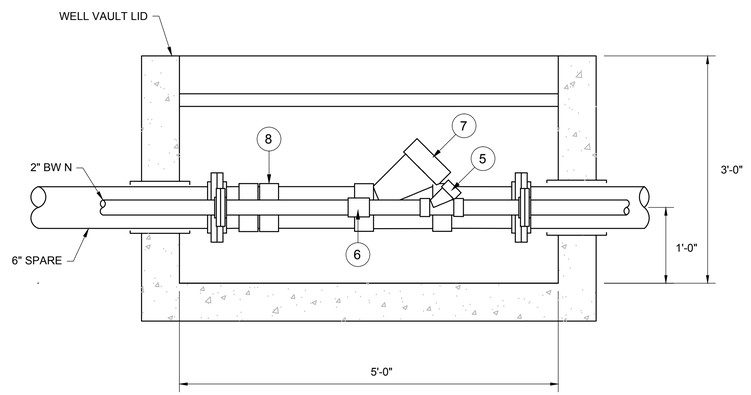

B SECTION
1"=1'-0"
M-07-02

0 1 2 3
SCALE: 1"=1'

- FINAL DESIGN - FOR AGENCY APPROVAL ONLY

REGISTERED PROFESSIONAL ENGINEER
BENJAMIN J. WUERL
C 67811
EXP 6/30/17
STATE OF CALIFORNIA

ETIC ENGINEERING
ARCADIS

NO.	DATE	DESCRIPTION	GM/SPEC	DWN	CHKD	SUPV	APVD BY
0	11/18/15	FINAL DESIGN	AJW	KLD	BW	RAO	

REVISIONS

APPROVED BY	
	SO
RAO	SUPV
	DSGN
	DWN
	CHKD
	OK
	DATE
	SCALES

TOPOCK GROUNDWATER REMEDIATION PROJECT

PIPELINE MAINTENANCE MECHANICAL DETAILS

GAS TRANSMISSION & DISTRIBUTION
PACIFIC GAS AND ELECTRIC COMPANY
SAN FRANCISCO, CALIFORNIA

MICROFILM	
BILL OF MATL	
DWG LIST	
SUPSDS	
SUPSD BY	
SHEET NO.	of SHEETS
M-07-02	REV 0

N1808

11/03/2015, 10:46, G:\Graphics\ARITOPOCK-01\Submittal_100%\DWGs\M-Mechanical\M-07-02.dwg, Tab: M-07-02

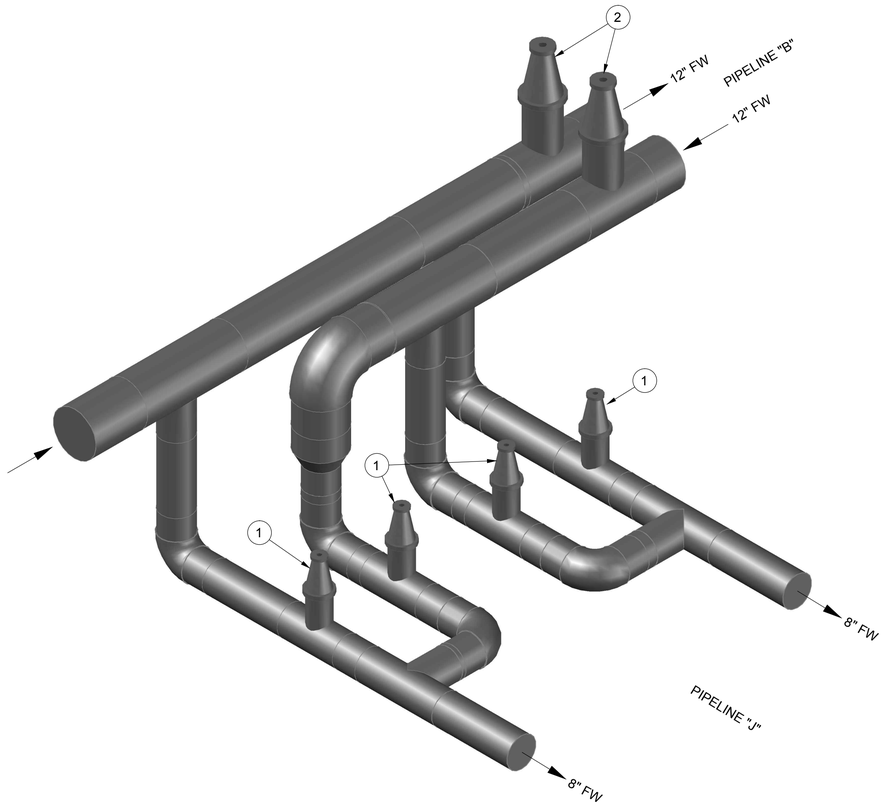

14 FRESH WATER PIPING ISOMETRIC VIEW

3/4" = 1'-0"

C-07-27, C-07-69

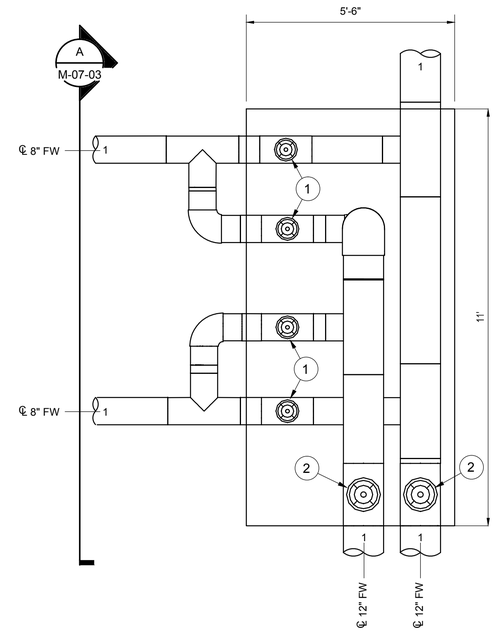

FRESH WATER PIPING ENLARGED

1/2" = 1'-0"

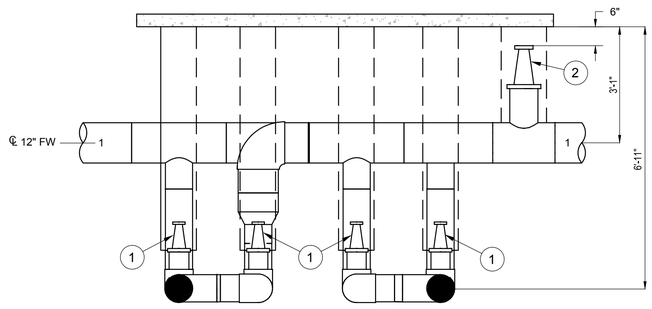

A SECTION

1/2" = 1'-0"

M-07-03

- FINAL DESIGN - FOR AGENCY APPROVAL ONLY

REGISTERED PROFESSIONAL ENGINEER BENJAMIN J. WUESTL C 67811 EXP 6/30/17 STATE OF CALIFORNIA

ETIC ENGINEERING

ARCADIS

N1808

NO.	DATE	DESCRIPTION	GM/SPEC	DWN	CHKD	SUPV	APVD BY
0	11/18/15	FINAL DESIGN	AJW	KLD	BW	RAO	

REVISIONS

APPROVED BY	
	SO
RAO	SUPV
	DSGN
	DWN
	CHKD
	OK
	DATE
	SCALES

TOPOCK GROUNDWATER REMEDIATION PROJECT

DETAIL FOR THE FW CONNECTION

GAS TRANSMISSION & DISTRIBUTION
PACIFIC GAS AND ELECTRIC COMPANY
SAN FRANCISCO, CALIFORNIA

MICROFILM	
BILL OF MATL	
DWG LIST	
SUPSDS	
SUPSD BY	
SHEET NO. of	SHEETS
M-07-03	REV 0

11/03/2015, 10:47, G:\Graphics\ARITOPOCK-01\Submittal_100%\DWGs\M-Mechanical\M-07-03.dwg, Tab: M-07-03

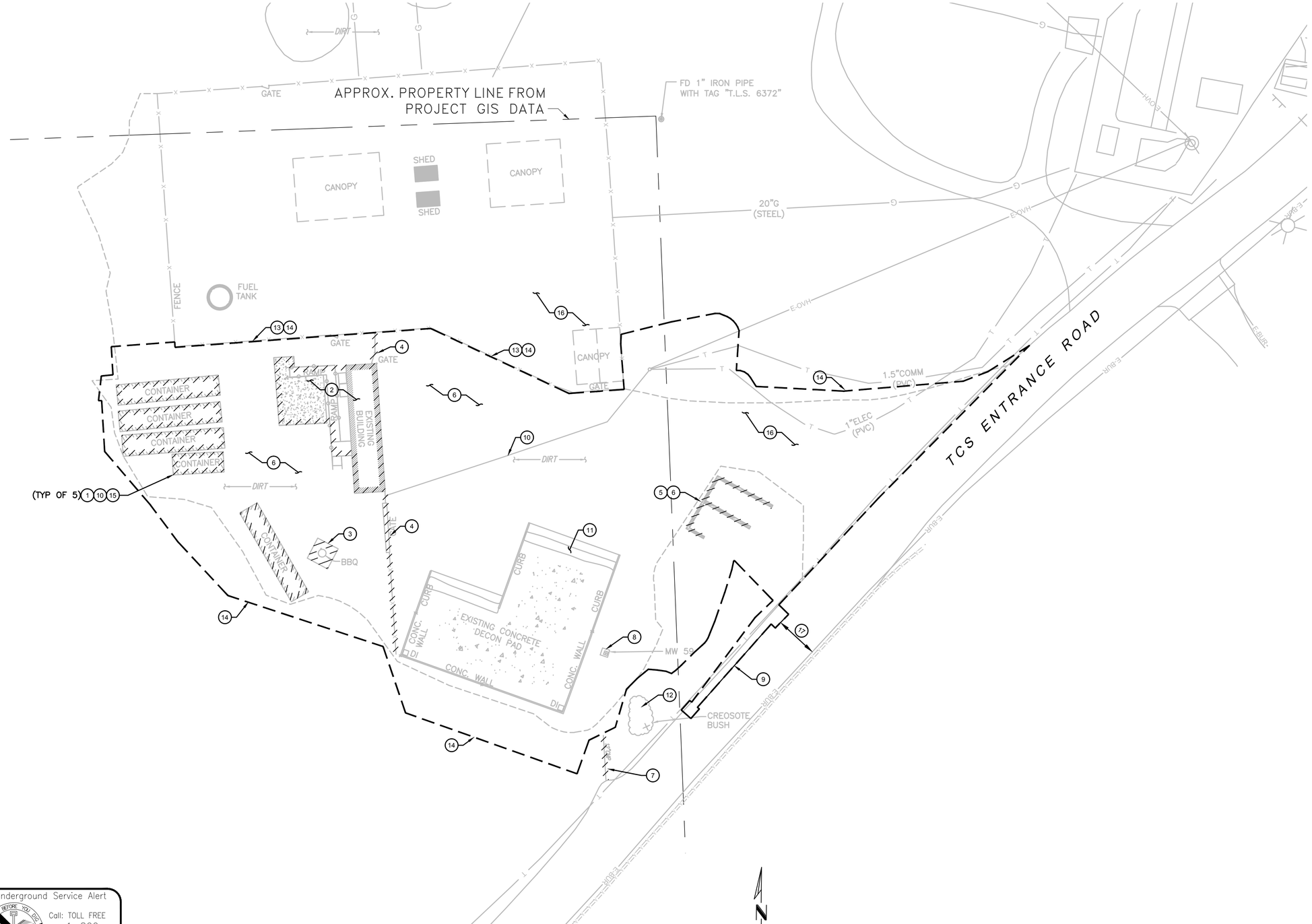

GENERAL NOTES

A SEE LEGEND, NOTES & ABBREVIATIONS C-08-00 FOR COMPLETE GENERAL NOTES.

KEYED NOTES

1 REMOVE AND RELOCATE EX. CONTAINERS. COORDINATE LOCATION WITH OWNER.
2 DEMOLISH EX. CONCRETE PATIO, RAMP AND TRAILER. CAP EXISTING UTILITIES.
3 REMOVE BBQ PIT. BACKFILL WITH COMPACTED STRUCTURAL FILL. SEE SPEC. SECTION 31 23 13.
4 DEMOLISH EX. FENCE AND GATES.
5 DEMOLISH EX. WALL.
6 COORDINATE LIMITS OF DEMOLITION/EXCAVATION WITH SITE IMPROVEMENTS PLAN.
7 DEMOLISH EX. CULVERT.
8 PROTECT EX. WELL.
9 SAWCUT AND REMOVE EX. PAVEMENT. COORDINATE LIMITS WITH DRAINAGE PLAN.
10 REMOVE ELEC. UTILITIES AS DIRECTED BY ELECTRICAL ENGINEER.
11 PROTECT EX. DECON PAD AND PERIMETER WALLS DURING CONSTRUCTION.
12 PROTECT CREOSOTE BUSH.
13 PROTECT EXISTING FENCE & GATES.
14 APPROX. LIMITS OF WORK.
15 REMOVE PG&E LAN/WAN CONNECTION WHERE FOUND.
16 ACCESS TO TRANSWESTERN GAS METERING STATION YARD MUST BE MAINTAINED AT ALL TIMES.
17 AT MINIMUM ONE LANE MUST REMAIN OPEN AT ALL TIMES.

- FINAL DESIGN - FOR AGENCY APPROVAL ONLY

REGISTERED PROFESSIONAL ENGINEER BENJAMIN J. WUSEL C 67811 EXP 6/30/17 STATE OF CALIFORNIA

Underground Service Alert
Call: TOLL FREE 1-800 227-2600
TWO WORKING DAYS BEFORE YOU DIG

ETIC ENGINEERING

ARCADIS

NO.	DATE	DESCRIPTION	GM/SPEC	DWN	CHKD	SUPV	APVD BY
1	11/18/15	FINAL DESIGN		AJW	WLM	BW	RAO
0	8/5/15	90% RTC RESOLUTION		AJW	KLD	WLM	BJW

REVISIONS

APPROVED BY	RAO
SO	
SUPV	
DSGN	
DWN	
CHKD	
OK	
DATE	
SCALES	

TOPOCK GROUNDWATER REMEDIATION PROJECT

TRANSWESTERN BENCH SITE DEMOLITION PLAN

GAS TRANSMISSION & DISTRIBUTION
PACIFIC GAS AND ELECTRIC COMPANY
SAN FRANCISCO, CALIFORNIA

MICROFILM	
BILL OF MATL	
DWG LIST	
SUPSDS	
SUPSD BY	
SHEET NO.	of SHEETS
C-08-01	REV 1

11/03/2015, 09:46, G:\Gr\[illegible]\AR TOPOCK-01 S\[illegible]\100% DWG\C-C-[illegible]C-08-01.d[illegible]T[illegible] C-08-01

N1808

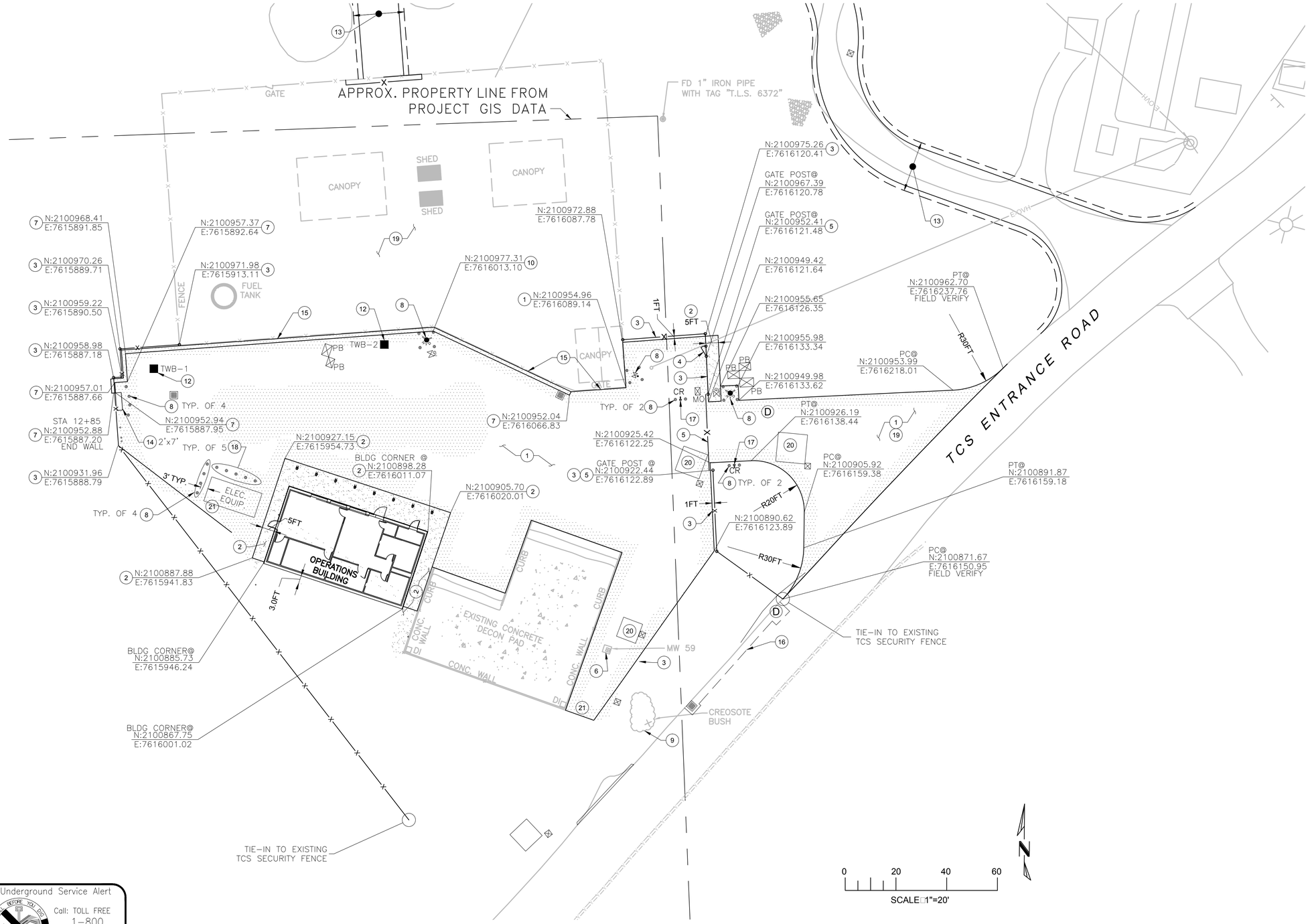

GENERAL NOTES

A SEE LEGEND, NOTES & ABBREVIATIONS C-08-00 FOR COMPLETE GENERAL NOTES.
B ALL PERIMETER FENCE AND GATE SHALL MEET PG&E PROPERTY FENCE AND GATE STANDARD L-50.

KEYED NOTES

1. INSTALL ASPHALT PAVEMENT. SEE DETAIL 1/C-00-09.
2. INSTALL CONCRETE SIDEWALK. SEE DETAIL 4/C-00-09.
3. INSTALL 8FT HIGH CHAIN LINK FENCE. SEE DRAWING C-00-06 AND C-00-07.
4. INSTALL PG&E STANDARD PERSONNEL GATE AS MANUFACTURED BY SGS.
5. INSTALL 30FT SLIDE GATE. SEE DRAWING C-00-06 AND C-00-07.
6. ADJUST EX. WELL TO FINISHED GRADE. COORDINATE FINAL CONDITION WITH PG&E.
7. INSTALL THICKEN EDGE. SEE DETAIL 2/C-00-09.
8. INSTALL GUARD POSTS. SEE DETAIL 4/C-00-05.
9. PROTECT EX. CREOSOTE BUSH.
10. INSTALL CURB. SEE DETAIL 3/C-00-09.
11. REFER TO STRUCTURAL DRAWING S-08-09 FOR CONCRETE AND COLUMN INTERFACE.
12. CONFIRM WELL LOCATIONS WITH DRAWING C-00-03.
13. FOR NEW ACCESS ROAD LAYOUT, SEE DRAWING C-08-11.
14. AREA RESERVED FOR ELECTRICAL EQUIPMENT. SEE ELECTRICAL DRAWING E-08-01.
15. PROTECT EXISTING FENCE AND GATES.
16. REINSTATE ASPHALT PAVEMENT AND CURB. MATCH EXISTING CONDITIONS.
17. INSTALL HI-LO CARD READER FOR MAIN GATE AND ASSOCIATED EQUIPMENT. SEE PG&E DRAWINGS S1016, 406169, S1036 THRU 38. COORDINATE ELEC. CONDUITS AND EQUIP. WITH ELEC. DRAWINGS.
18. INSTALL REMOVABLE GUARD POSTS. SEE DETAIL 4/C-00-05.
19. ACCESS TO TRANSWESTERN GAS METERING STATION YARD MUST BE MAINTAINED AT ALL TIMES.
20. TRENCH F VAULT LOCATION SEE DWG C-07-52
21. EDGE OF ASPHALT

Underground Service Alert
DIG BEFORE YOU DIG
Call: TOLL FREE 1-800 227-2600
TWO WORKING DAYS BEFORE YOU DIG

- FINAL DESIGN - FOR AGENCY APPROVAL ONLY

REGISTERED PROFESSIONAL ENGINEER BENJAMIN J. WUERL C 67811 Exp 6/30/17 STATE OF CALIFORNIA

ETIC ENGINEERING
ARCADIS

NO.	DATE	DESCRIPTION	GM/SPEC	DWN	CHKD	SUPV	APVD BY
1	11/18/15	FINAL DESIGN		AJW	WLM	BW	RAO
0	8/5/15	90% RTC RESOLUTION		AJW	KLD	WLM	BJW

REVISIONS

APPROVED BY	
RAO	SO
	SUPV
	DSGN
	DWN
	CHKD
	OK
	DATE
	SCALES

TOPOCK GROUNDWATER REMEDIATION PROJECT
TRANSWESTERN BENCH SITE IMPROVEMENTS PLAN
GAS TRANSMISSION & DISTRIBUTION
PACIFIC GAS AND ELECTRIC COMPANY
SAN FRANCISCO, CALIFORNIA

MICROFILM	
BILL OF MATL	
DWG LIST	
SUPSDS	
SUPSD BY	
SHEET NO. of SHEETS	
C-08-02	REV 1

N1808

11/03/2015, 09:47, G:\GIS\ARTOPOCK-01\SIT\100%DWG\C-C\C-08-02.dgn, T\C-08-02

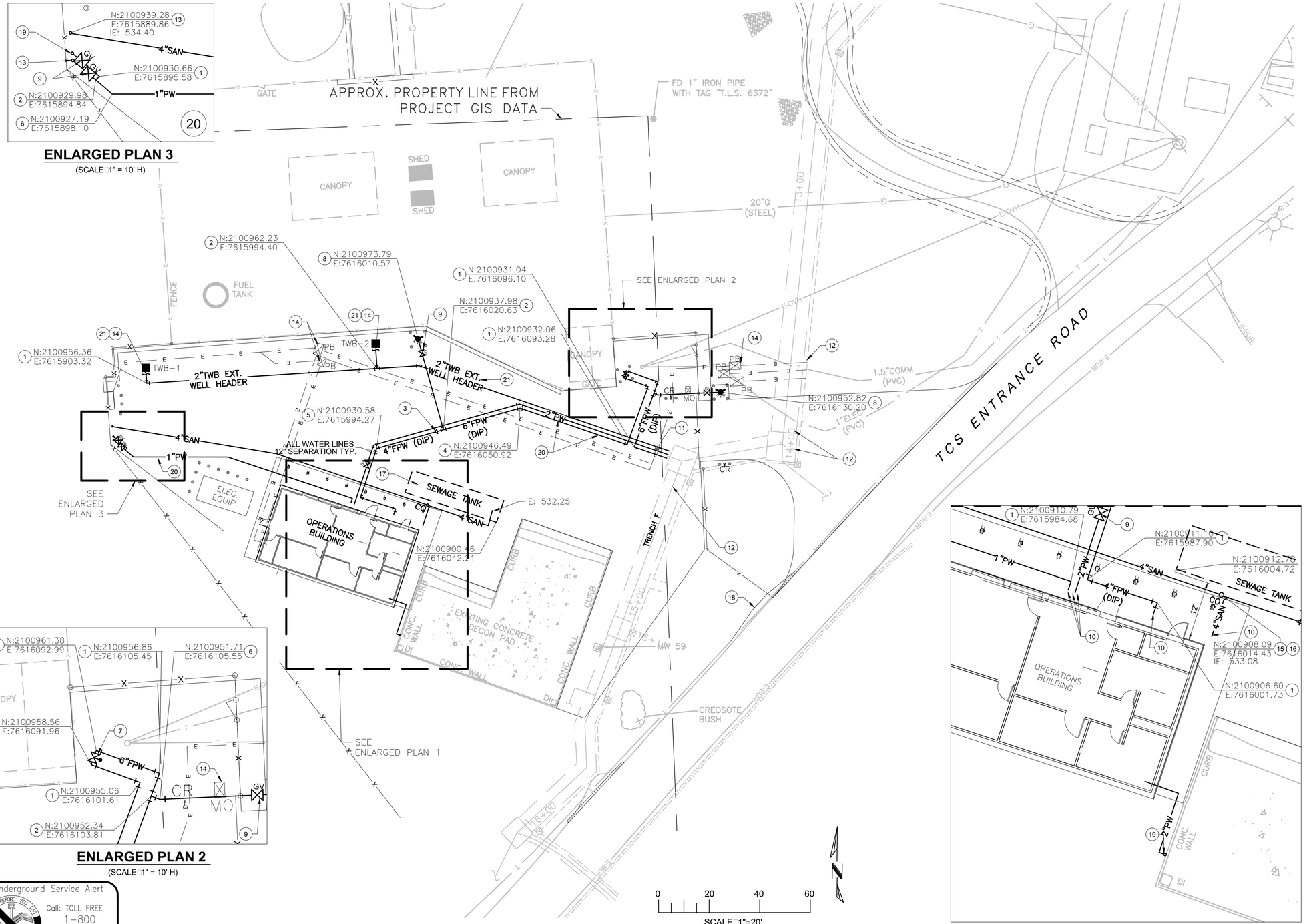

ENLARGED PLAN 3

(SCALE 1" = 10' H)

ENLARGED PLAN 2

(SCALE 1" = 10' H)

ENLARGED PLAN 1

(SCALE 1" = 10' H)

GENERAL NOTES

A SEE LEGEND, NOTES □ ABBREVIATIONS C-08-00 FOR COMPLETE GENERAL NOTES.

B THE USE OF MECHANICAL RESTRAINTS IS RECOMMENDED BASED ON UNKNOWN SITE SOIL CHARACTERISTICS. THRUST BLOCK INSTALLATION IS BASED ON INSTALLING THRUST BLOCKS AGAINST UNDISTURBED SITE SOILS. CONTRACTOR IS RESPONSIBLE FOR ADEQUATE THRUST RESTRAINTS ON ALL PRESSURE LINES TO BE INSTALLED. THRUST RESTRAINT SYSTEMS SHALL BE SUBMITTED AND APPROVED BY ENGINEER.

KEYED NOTES

1 INSTALL 90° BEND. SEE PLAN FOR ASSOCIATED SIZE.
2 INSTALL TEE. SEE PLAN FOR ASSOCIATED SIZE.
3 INSTALL REDUCER. SEE PLAN FOR ASSOCIATED SIZE.
4 INSTALL 22.5° BEND AND 11.25° FOR TOTAL BEND OF 33.75°. SEE PLAN FOR ASSOCIATED SIZE.
5 INSTALL 45° BEND AND 11.25° FOR TOTAL BEND OF 56.25°. SEE PLAN FOR ASSOCIATED SIZE.
6 INSTALL 22.5° BEND. SEE PLAN FOR ASSOCIATED SIZE.
7 INSTALL POST INDICATOR VALVE. SEE DETAIL 4/C-00-10.
8 INSTALL FIRE HYDRANT. SEE DETAIL 6/C-00-09.
9 INSTALL GATE VALVE AND VALVE BOX. SEE DETAIL 5/C-00-10.
10 INSTALL BUILDING UTILITY PIPE CONNECTION. SEE 3/C-00-10. COORDINATE LOCATION WITH PLUMBING DRAWING P-08-01.
11 SEE DRAWING C-07-52 AND DETAIL 10/C-07-117 FOR CONNECTION TO TRENCH F. COORDINATE FIELD ADJUSTMENT AS NEEDED.
12 SEE DRAWING C-07-52 FOR VAULTS AND ALIGNMENT OF TRENCH F.
13 CAP SERVICE AT 6" ABOVE FINISHED GRADE.
14 FOR ELECTRICAL SERVICE TO WELL AND PULL BOX LOCATION, SEE DRAWING E-08-01.
15 INSTALL CLEANOUT. SEE DETAIL 5/C-00-08.
16 INSTALL WYE CONNECTION. SEE PLAN FOR ASSOCIATED SIZE.
17 SEWAGE SYSTEM.
18 REROUTE EX. TELECOM SERVICE. PROVIDE 12" MIN. HORIZONTAL AND VERTICAL CLEARANCE. COORDINATE RELOCATION WITH FRONTIER
19 INSTALL HOSE BIB. SEE DETAIL 1/C-00-08.
20 FOR PIPE MATERIAL OF WATER DISTRIBUTION LINES 2" DIAMETER OR LESS, SEE PLUMBING SPEC. SECTION 22 10 01.
21 EXTEND WATER SERVICE TO WELLS. COORDINATE WELL LOCATION WITH DRAWING C-00-03.
22 INSTALL 45° BEND. SEE PLAN FOR ASSOCIATED SIZE.

Underground Service Alert
DIG ALERT BEFORE YOU DIG
Call: TOLL FREE
1-800
227-2600
TWO WORKING DAYS
BEFORE YOU DIG

- FINAL DESIGN -
FOR AGENCY
APPROVAL ONLY

REGISTERED PROFESSIONAL ENGINEER
BENJAMIN J. WUEST
C 67811
EXP 6/30/17
STATE OF CALIFORNIA

ETIC ENGINEERING

ARCADIS

NO.	DATE	DESCRIPTION	GM/SPEC	DWN	CHKD	SUPV	APVD BY
1	11/18/15	FINAL DESIGN		AJW	WLM	BW	RAO
0	8/5/15	90% RTC RESOLUTION		AJW	KLD	WLM	BJW

REVISIONS

APPROVED BY	
RAO	SO
	SUPV
	DSGN
	DWN
	CHKD
	OK
	DATE
	SCALES

TOPOCK GROUNDWATER REMEDIATION PROJECT
TRANSWESTERN BENCH
SITE UTILITIES
PLAN
GAS TRANSMISSION & DISTRIBUTION
PACIFIC GAS AND ELECTRIC COMPANY
SAN FRANCISCO, CALIFORNIA

MICROFILM	
BILL OF MATL	
DWG LIST	
SUPSDS	
SUPSD BY	
SHEET NO. of	SHEETS
C-08-03	REV 1

11/03/2015, 09:50, G:\Gr...\AR TOPOCK-01 S...\100% DWG\C-C-...\C-08-03.d..., T...\C-08-03

N1808

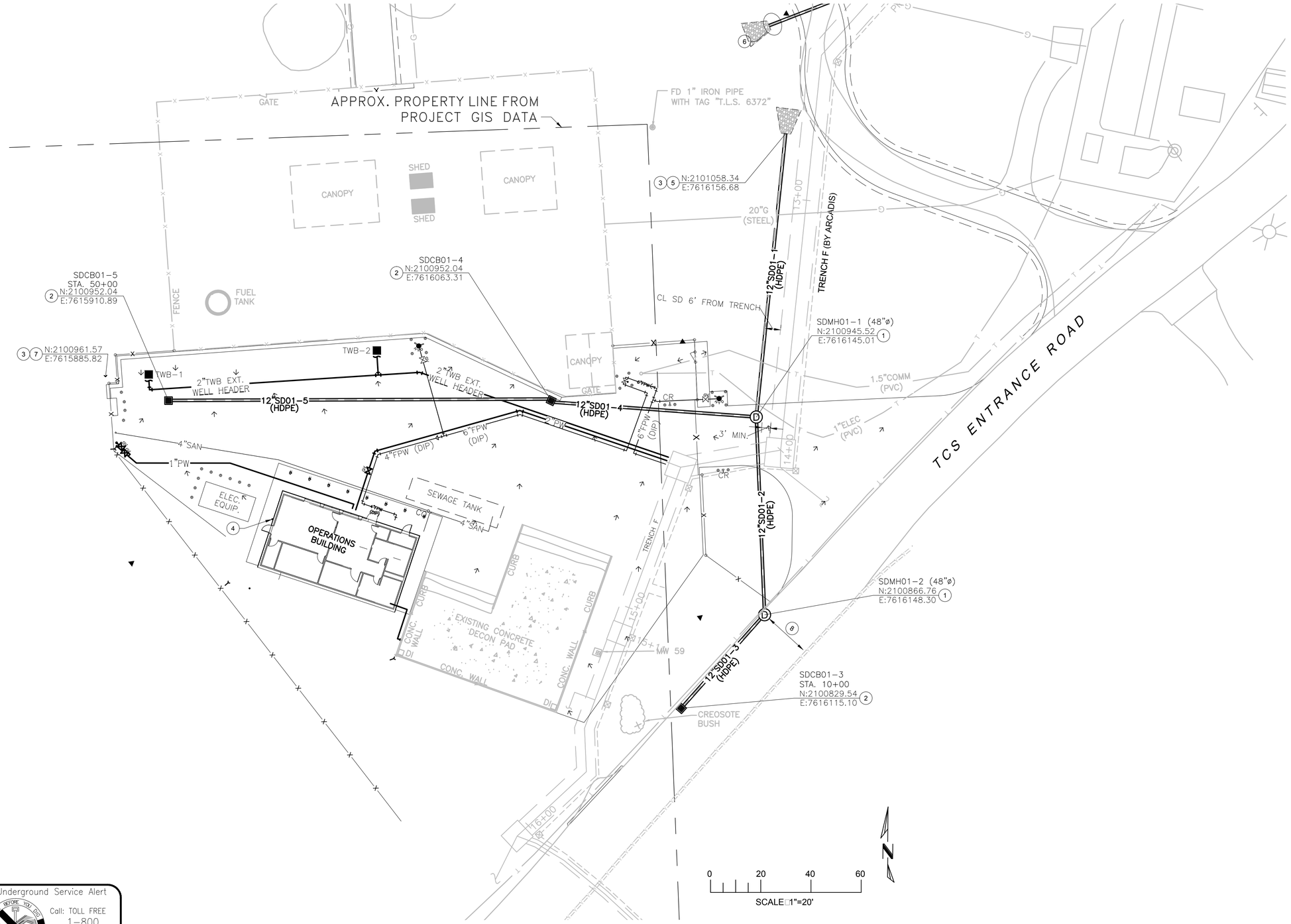

GENERAL NOTES

A SEE LEGEND, NOTES ABBREVIATIONS C-08-00 FOR COMPLETE GENERAL NOTES.

KEYED NOTES

1 INSTALL MANHOLE. SEE DETAILS 2,3,4/C-00-08.
2 INSTALL 2"X2" CONC. CB AND GRATE SIMILAR TO MODEL CB-2424 AS MANUFACTURED BY OLD CASTLE.
3 INSTALL 18" THICK RIPRAP APRON (D50=12") OVER GEOTEXTILE FABRIC (MODEL 140N BY MIRAFI OR EQUIVALENT). SEE CALTRANS STANDARD DETAIL SS-10 (SIM) EXTEND MIN. 12" VERTICALLY ABOVE CROWN.
4 INSTALL ROOF DRAIN. KEEP ON NORTH FACE OF WALL. (DO NOT CROSS CONNECT WITH WALL DRAIN.)
5 INSTALL FLARED END SECTION. SEE CALTRANS STANDARD DETAIL D94A.
6 FOR NEW ACCESS ROAD LAYOUT, SEE DRAWING C-08-11.
7 DAYLIGHT WALL DRAIN ONTO SLOPE AND ENSURE DISCHARGE HAS A FREE DRAINING PATH.
8 AT MINIMUM ONE LANE MUST REMAIN OPEN AT ALL TIMES.

- FINAL DESIGN - FOR AGENCY APPROVAL ONLY

REGISTERED PROFESSIONAL ENGINEER BENJAMIN J. WUERL C 67811 EXP. 6/30/17 STATE OF CALIFORNIA

Underground Service Alert
Call: TOLL FREE 1-800 227-2600
TWO WORKING DAYS BEFORE YOU DIG

ETIC ENGINEERING

ARCADIS

NO.	DATE	DESCRIPTION	GM/SPEC	DWN	CHKD	SUPV	APVD BY
1	11/18/15	FINAL DESIGN		AJW	WLM	BW	RAO
0	8/5/15	90% RTC RESOLUTION		AJW	KLD	WLM	BJW

REVISIONS

APPROVED BY: RAO

SO / SUPV / DSGN / DWN / CHKD / OK / DATE / SCALES

TOPOCK GROUNDWATER REMEDIATION PROJECT
TRANSWESTERN BENCH STORM DRAINAGE PLAN
GAS TRANSMISSION & DISTRIBUTION
PACIFIC GAS AND ELECTRIC COMPANY
SAN FRANCISCO, CALIFORNIA

MICROFILM
BILL OF MATL
DWG LIST
SUPSDS
SUPSD BY
SHEET NO. of SHEETS
C-08-04
REV 1

11/03/2015, 09:56, G:\Gr\ARTOPOCK-01\S\100% DWG\C-C\C-08-04.dwg, T\C-08-04

N1808

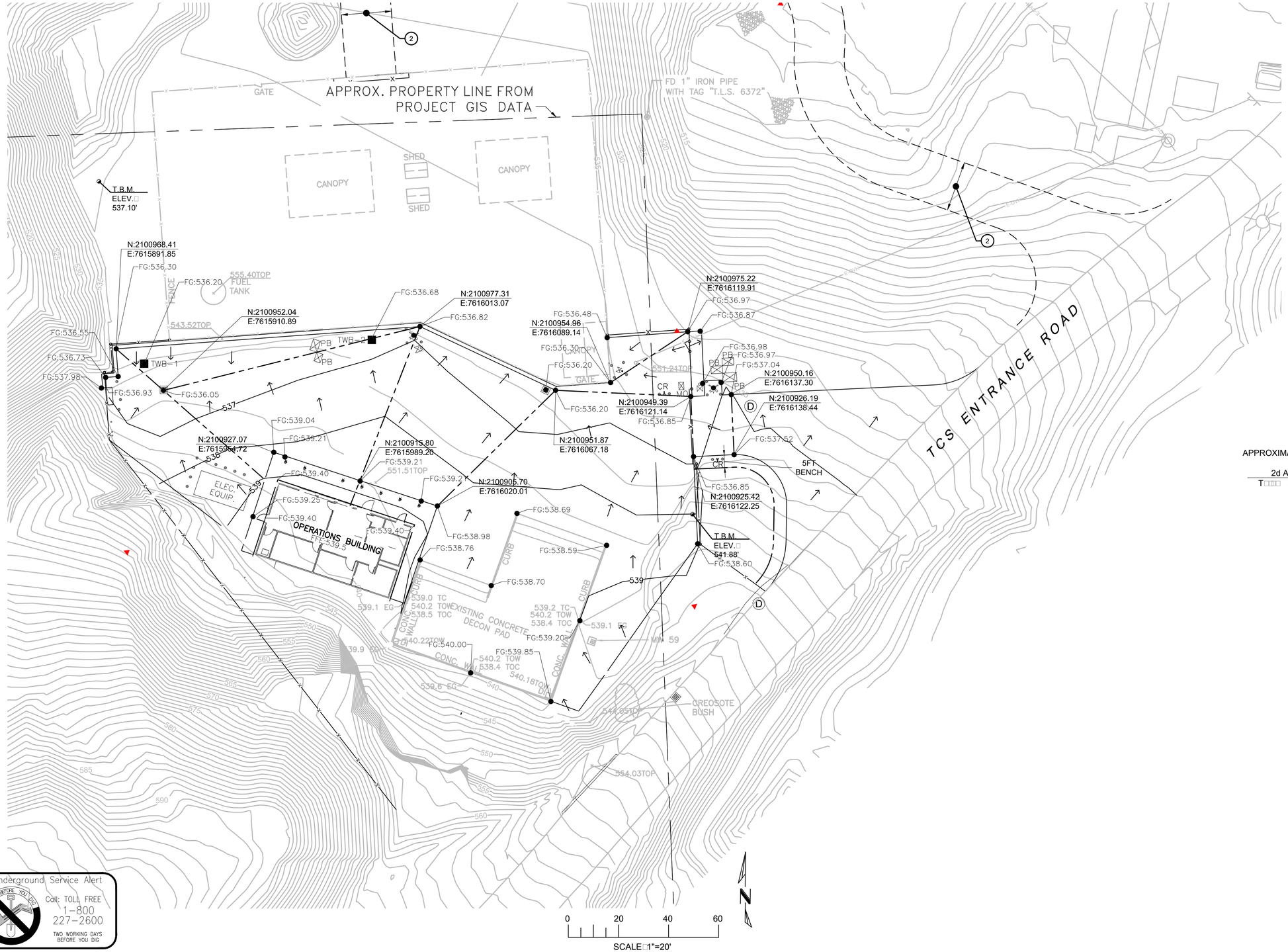

GENERAL NOTES:

A SEE LEGEND, NOTES & ABBREVIATIONS C-08-00 FOR COMPLETE GENERAL NOTES.

KEYED NOTES:

1 SEE DRAWING C-08-11 FOR NEW ACCESS ROAD LAYOUT.
2 ALL SLOPES SHALL NOT BE ANY STEEPER THAN 2:1 (H:V)

APPROXIMATE EARTHWORK VOLUMES - TRANSWESTERN BENCH AREA
COMPARING FINISHED AND EXISTING SURFACES

2d Ar(S. F.)	C(C. Yd.)	F(C. Yd.)	N(C. Yd.)
T 28,527	839	211	628 C

Underground Service Alert
Call: TOLL FREE
1-800
227-2600
TWO WORKING DAYS BEFORE YOU DIG

- FINAL DESIGN - FOR AGENCY APPROVAL ONLY

REGISTERED PROFESSIONAL ENGINEER
BENJAMIN J. WUEBEL
C 67811
EXP 6/30/17
STATE OF CALIFORNIA

ETIC ENGINEERING

ARCADIS

NO.	DATE	DESCRIPTION	GM/SPEC	DWN	CHKD	SUPV	APVD BY
1	11/18/15	FINAL DESIGN	AJW	WLM	BW	RAO	
0	8/5/15	90% RTC RESOLUTION	AJW	KLD	WLM	BJW	

REVISIONS

APPROVED BY	
RAO	SO
	SUPV
	DSGN
	DWN
	CHKD
	OK
	DATE
	SCALES

TOPOCK GROUNDWATER REMEDIATION PROJECT
TRANSWESTERN BENCH SITE GRADING PLAN
GAS TRANSMISSION & DISTRIBUTION
PACIFIC GAS AND ELECTRIC COMPANY
SAN FRANCISCO, CALIFORNIA

MICROFILM	
BILL OF MATL	
DWG LIST	
SUPSDS	
SUPSD BY	
SHEET NO. of SHEETS	
C-08-05	REV 1

11/03/2015, 09:54, G:\Gr\...\ARTOPOCK-01S\...\100% DWG\C-C\...\C-08-05.dwg, T...\C-08-05

N1808

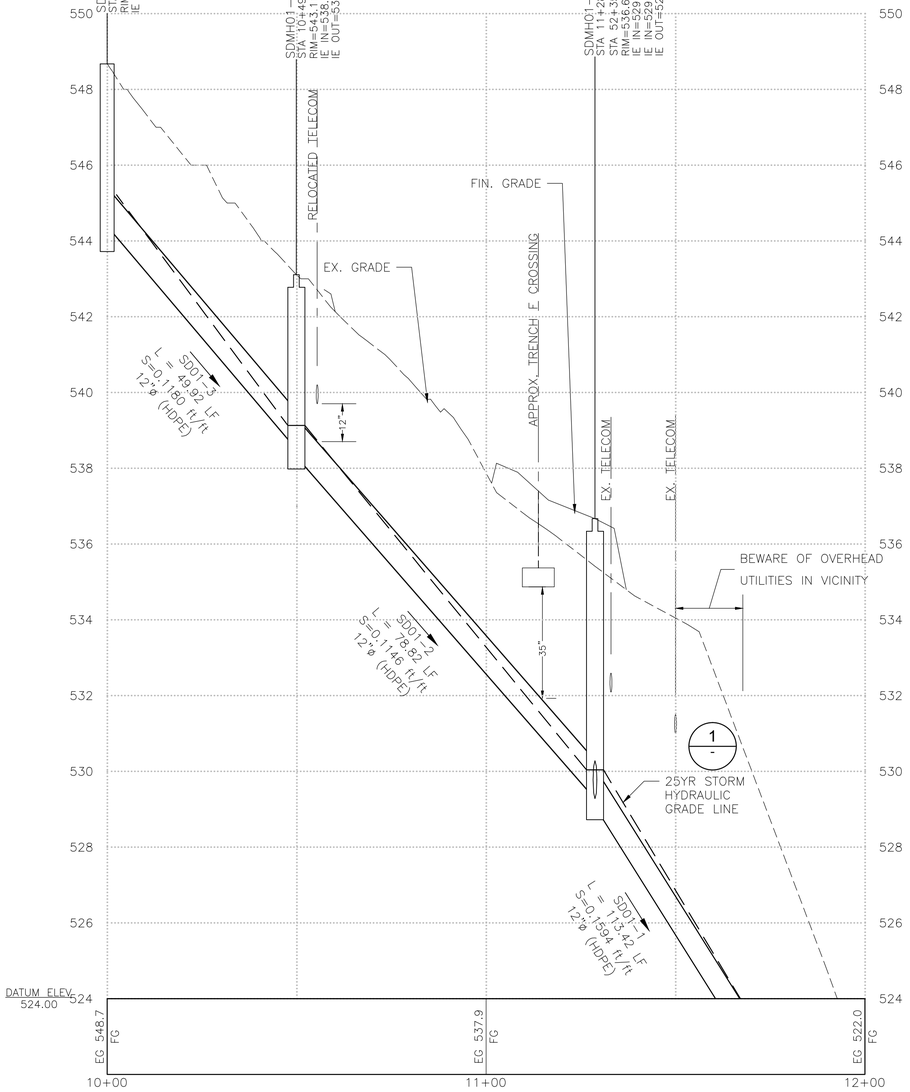

STORM DRAINAGE "SD01" - PROFILE

(SCALE□1" = 20' H□1" = 2' V)

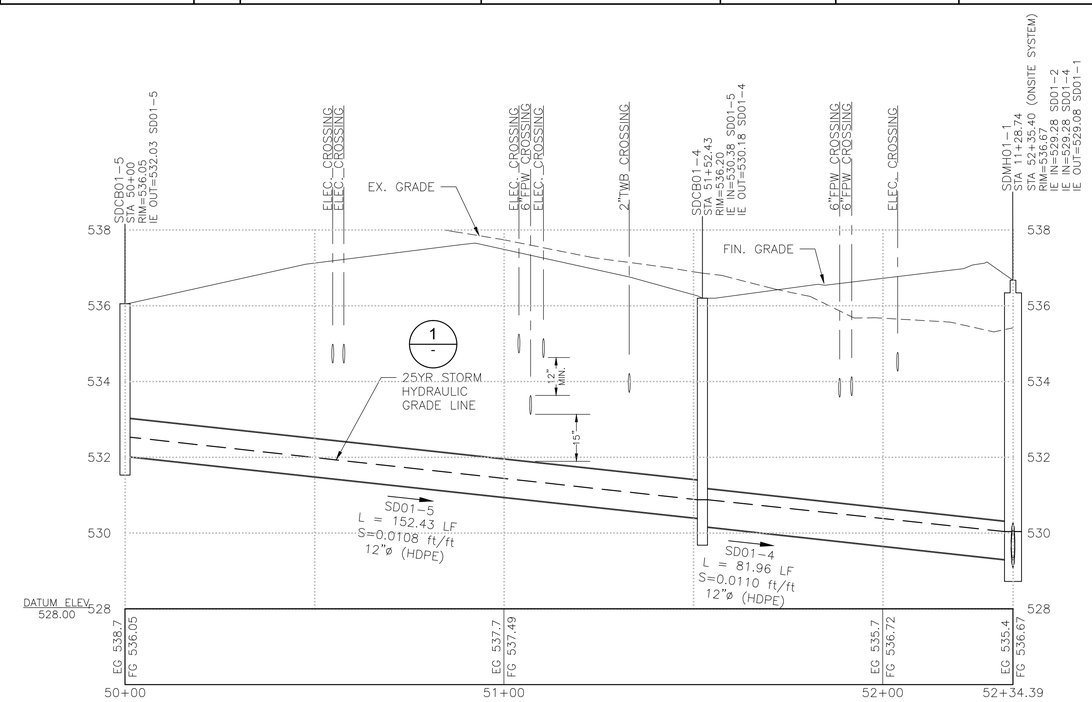

STORM DRAINAGE "SD01-ONSITE" - PROFILE

(SCALE□1" = 20' H□1" = 2' V)

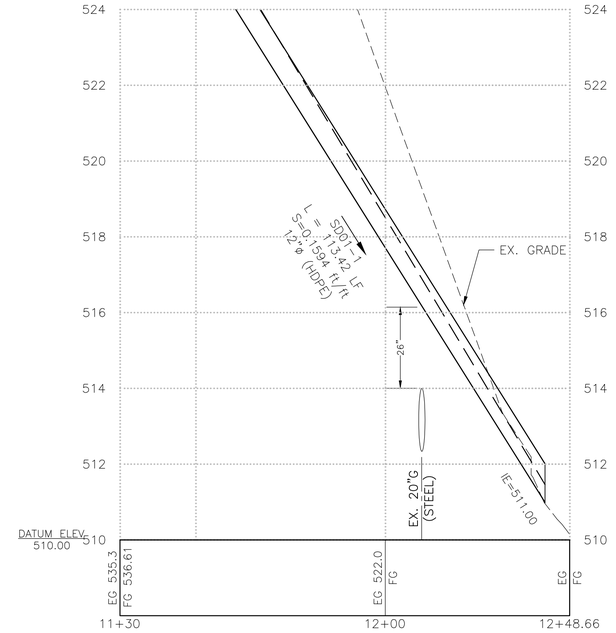

STORM DRAINAGE "SD01" - PROFILE (Cont'd)

(SCALE□1" = 20' H□1" = 2' V)

Hydraflow

Line No.	DnStm Ln No	Line Length (ft)	Drng Area (ac)	Runoff Coeff (C)	Inlet Time (min)	Tc (min)	i Sys (in/hr)	Total Runoff (cfs)	Known Q (cfs)	Flow Rate (cfs)	Vel Ave (ft/s)	n-val Pipe	Line Size (in)	Line Slope (%)	Invert Dn (ft)	Invert Up (ft)	Gnd/Rim El Dn (ft)	Gnd/Rim El Up (ft)	HGL Dn (ft)	HGL Up (ft)
1	Outfall	113.335	0.00	0.00	0.0	12.5	3.14	6.23	0.00	6.23	12.85	0.012	12	15.95	511.00	529.08	0.00	536.67	511.46	530.04
2	1	78.828	0.00	0.00	0.0	12.2	3.18	3.71	0.00	3.71	5.58	0.012	12	11.46	529.28	538.31	536.67	543.11	530.04	539.13
3	2	50.096	2.33	0.50	12.0	12.0	3.21	3.73	0.00	3.73	6.33	0.012	12	11.76	538.51	544.40	543.11	548.67	539.13	545.22
4	1	81.759	0.60	0.70	10.0	11.4	3.29	2.68	0.00	2.68	4.37	0.012	12	1.10	529.28	530.18	536.67	536.20	530.04	530.88 j
5	4	152.500	0.63	0.63	10.0	10.0	3.52	1.40	0.00	1.40	3.55	0.012	12	1.06	530.38	532.03	536.20	536.05	530.88	532.53 j

1 - **STORM DRAINAGE CONVEYANCE CALCS - 25YR STORM**

SCALE: NTS

- FINAL DESIGN - FOR AGENCY APPROVAL ONLY

REGISTERED PROFESSIONAL ENGINEER
BENJAMIN J. WUERL
C 67811
EXP. 6/30/17
STATE OF CALIFORNIA

ETIC ENGINEERING

ARCADIS

NO.	DATE	DESCRIPTION	GM/SPEC	DWN	CHKD	SUPV	APVD BY
1	11/18/15	FINAL DESIGN	AJW	WLM	BW	RAO	
0	09/2014	PRE-FINAL (90%) DESIGN	DA	HO	CH	HO	

REVISIONS

APPROVED BY	
RAO	SO
	SUPV
	DSGN
	DWN
	CHKD
	OK
	DATE
	SCALES

TOPOCK GROUNDWATER REMEDIATION PROJECT

TRANSWESTERN BENCH STORM DRAINAGE PROFILE

GAS TRANSMISSION & DISTRIBUTION

PACIFIC GAS AND ELECTRIC COMPANY

SAN FRANCISCO, CALIFORNIA

MICROFILM	
BILL OF MATL	
DWG LIST	
SUPSDS	
SUPSD BY	
SHEET NO. of SHEETS	
C-08-09	REV 1

N1808

11/03/2015, 10:00, G:\Gr□□□□AR TOPOCK-01 S□□□□□□100% DWG□C-C□□□C-08-09.dwg, T□□ C-08-09

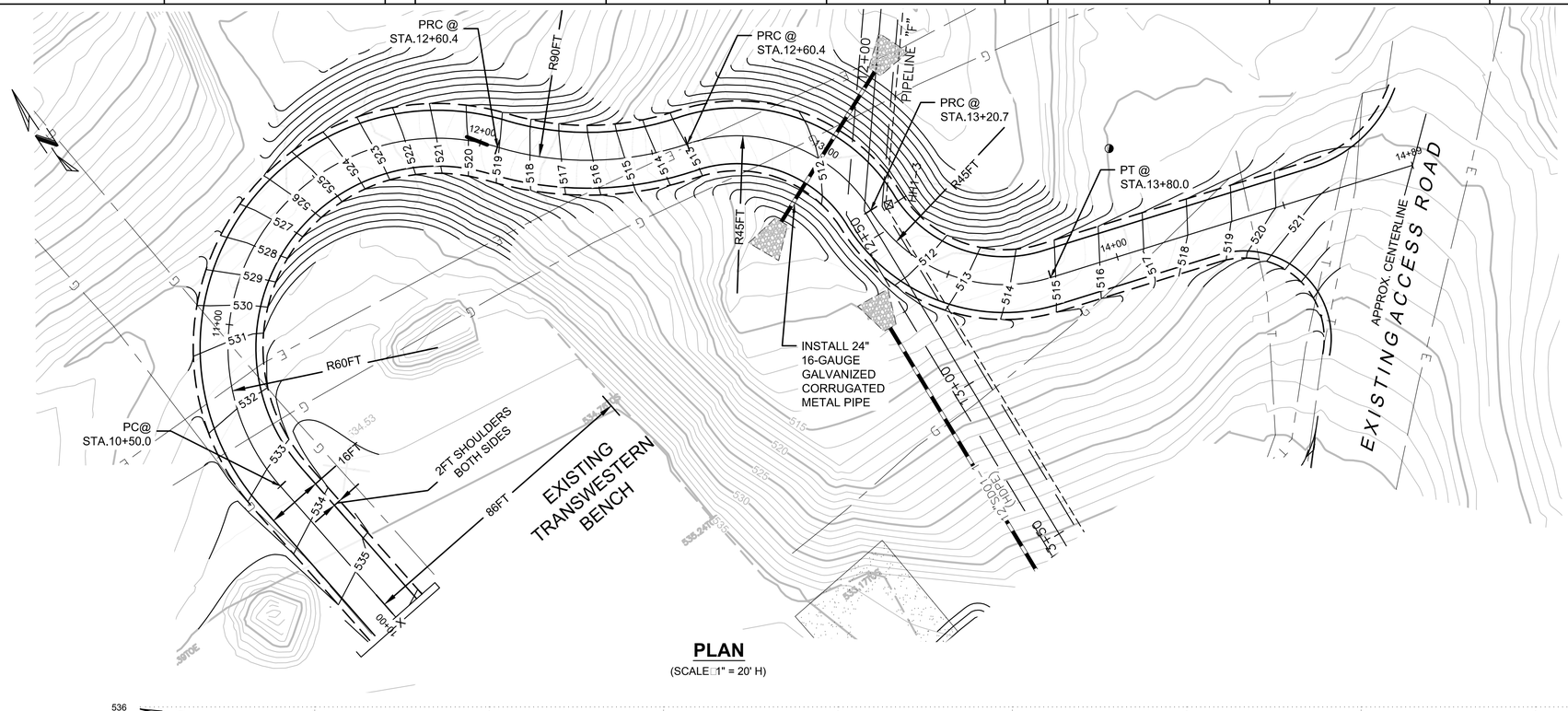

PLAN

(SCALE 1" = 20' H)

EARTHWORK VOLUMES
NEW ACCESS ROAD

2d Ar (S. F.)	C (C. Yd.)	F (C. Yd.)	N (C. Yd.)
T 15355.68	711.60	646.88	64.73 C

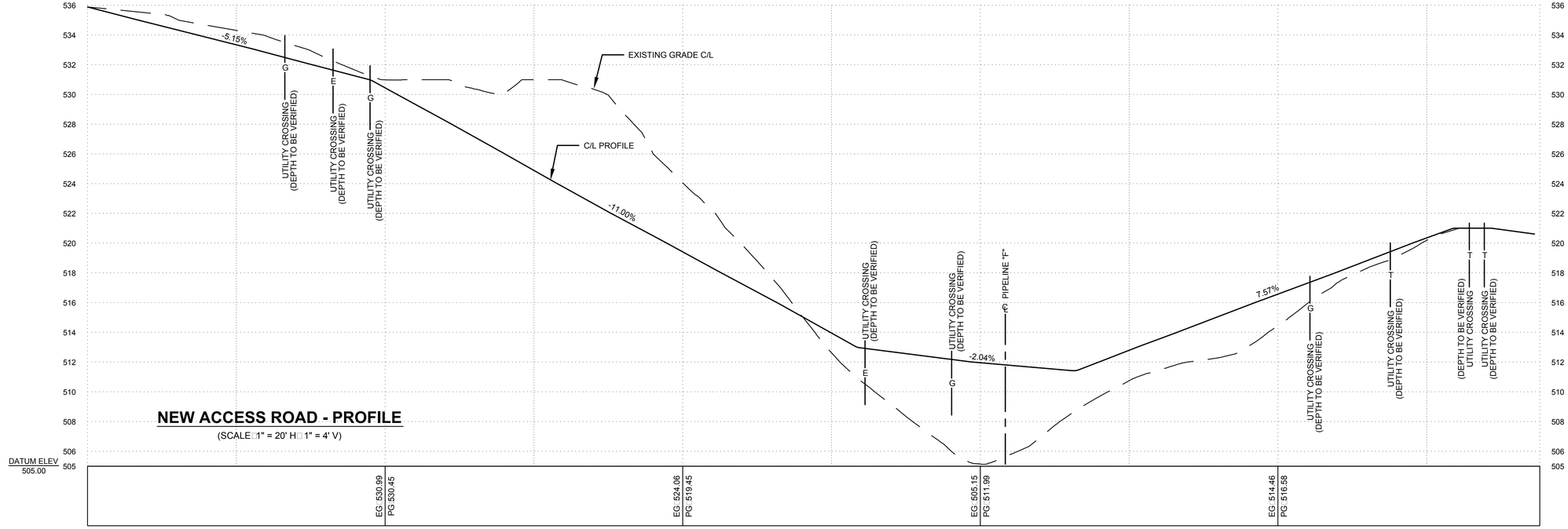

NEW ACCESS ROAD - PROFILE

(SCALE 1" = 20' H 1" = 4' V)

- FINAL DESIGN -
FOR AGENCY
APPROVAL ONLY

REGISTERED PROFESSIONAL ENGINEER BENJAMIN J. WUERL C 67811 EXP. 6/30/17 STATE OF CALIFORNIA

ETIC ENGINEERING

ARCADIS

NO.	DATE	DESCRIPTION	GM/SPEC	DWN	CHKD	SUPV	APVD BY
1	11/18/15	FINAL DESIGN		AJW	WLM	BW	RAO
0	09/08/14	PRE-FINAL (90%) DESIGN		DA	HO	CH	HO

REVISIONS

APPROVED BY: RAO

SO / SUPV / DSGN / DWN / CHKD / OK / DATE / SCALES

TOPOCK GROUNDWATER REMEDIATION PROJECT
TRANSWESTERN BENCH
SCHEMATIC SITE PLAN
NEW ACCESS ROAD
GAS TRANSMISSION & DISTRIBUTION
PACIFIC GAS AND ELECTRIC COMPANY
SAN FRANCISCO, CALIFORNIA

MICROFILM
BILL OF MATL
DWG LIST
SUPSDS
SUPSD BY
SHEET NO. of SHEETS
C-08-11 REV 1

11/03/2015, 10:02, G:\Gr\AR TOPOCK-01\S\100% DWG\C-C\C-08-11.dwg, T\C-08-11

N1808

REFERENCE SYMBOLS

BUILDING SECTION INDICATOR

WALL SECTION INDICATOR

ENLARGED DETAIL INDICATOR

SECTION DETAIL INDICATOR

EXTERIOR ELEVATION INDICATOR

INTERIOR ELEVATION INDICATOR

MATCH LINE
SEE XX/A-XXX

MATCH LINE INDICATOR

DRAWING REVISION INDICATOR

COLUMN GRIDLINE INDICATOR

EL XXX.XX

EL XXX'-XX"

SPOT ELEVATION INDICATOR

DATUM INDICATOR OR WORK POINT

E XXXXX EQUIPMENT INDICATOR
X XXXXX FIXTURE INDICATOR
F XXXXX FURNITURE INDICATOR
G XXXXX GRAPHIC/SIGNAGE INDICATOR

MISCELLANEOUS INDICATORS

ROOM NAME
XXXX
100 SF.

ROOM INDICATOR

F XXXXXX

FINISH INDICATOR

(DOOR) OPENING INDICATOR

XX'-XX" AFF

CEILING HEIGHT INDICATOR

WINDOW INDICATOR

MATERIAL (PER FINISH LEGEND)
FINISH (PER FINISH LEGEND)
MAT F-XXX
XX'-XX" AFF
HEIGHT

CEILING HEIGHT/MATERIAL/FINISH INDICATOR

WALL TYPE INDICATOR

(NON-RATED PARTITION)
(1-HOUR RATED PARTITION)
(2-HOUR RATED PARTITION)
(3-HOUR RATED PARTITION)
(4-HOUR RATED PARTITION)
SMOKE BARRIER
SMOKE PARTITION

PARTITIONS

KEYNOTE

PLAN SYMBOLS

MOUNTED TO WALL WITH BRACKET

IN WALL-MOUNTED CABINET

FIRE EXTINGUISHERS

EXISTING TO REMAIN (SHOWN SHADED)

EXISTING TO BE DEMOLISHED (SHOWN DASHED)

NEW

TYPE OF WORK

ABBREVIATIONS

ADDITIONAL ABBREVIATIONS ARE DEFINED IN LEGENDS THROUGHOUT THE DRAWING SET.

AC	ASPHALTIC CONCRETE, AIR CONDITIONING
ACC	ACCESSIBLE
ACP	ACOUSTICAL CEILING PANEL
ACST	ACOUSTICAL
AD	AREA DRAIN
ADDM	ADDENDUM
ADJ	ADJUSTABLE
AESS	ARCHITECTURALLY EXPOSED STRUCTURAL STEEL
AF	ACCESS FLOORING
AFF	ABOVE FINISHED FLOOR
AHU	AIR HANDLING UNIT
ALT	ALTERNATE
ALUM	ALUMINUM
ANOD	ANODIZED
APPROX	APPROXIMATE
APT	APARTMENT
ARCH	ARCHITECT, ARCHITECTURAL
AUTO	AUTOMATIC
AV	AUDIO VISUAL
AWP	ACOUSTICAL WALL PANEL(S)
BB	BULLETIN BOARD
BD	BOARD
BLDG	BUILDING
BLKG	BLOCKING
BO	BOTTOM OF
BOT	BOTTOM
BRG	BEARING
BRZ	BRONZE
BSMT	BASEMENT
BUR	BUILT UP ROOFING
CAB	CABINET
CB	CATCH BASIN
CEM	CEMENT, CEMENTITIOUS
CG	CORNER GUARD
CH	COAT HOOK
CI	CAST IRON
CJ	CONTROL JOINT
CIP	CAST-IN-PLACE
CL	CENTERLINE
CLG	CEILING
CLO	CLOSET
CLR	CLEAR
CMU	CONCRETE MASONRY UNIT
CO	CLEAN OUT, CASED OPENING
COL	COLUMN
COMM	COMMUNICATION
CONC	CONCRETE
CONN	CONNECTION, CONNECT
CONSTR	CONSTRUCTION
CONT	CONTINUOUS, CONTINUE
CORR	CORRIDOR
CPT	CARPET
CSWK	CASEWORK
CTR	CENTER
CU	CUBIC
D	DEEP, DEPTH
DBL	DOUBLE
DEMO	DEMOLISH, DEMOLITION
DET	DETAIL
DF	DRINKING FOUNTAIN
DIA	DIAMETER
DIAG	DIAGONAL, DIAGRAM
DIM	DIMENSION
DIV	DIVIDE, DIVISION
DMPF	DAMPPROOF, DAMPPROOFING
DN	DOWN
DR	DOOR, DRESSING ROOM
DS	DOWNSPOUT
DW	DISHWASHER
DWG	DRAWING
DWR	DRAWER
E	EAST
EIFS	EXTERIOR INSULATION AND FINISH SYSTEM
EJ	EXPANSION JOINT
EL	ELEVATION
ELEC	ELECTRIC, ELECTRICAL
ELEV	ELEVATOR
ENCL	ENCLOSE, ENCLOSURE
EOS	EDGE OF SLAB
EP	ELECTRIC PANEL
EQ	EQUAL
EQUIP	EQUIPMENT
ESCAL	ESCALATOR
EW	EACH WAY
EXH	EXHAUST
EXP	EXPANSION, EXPOSED
EXIST	EXISTING
FA	FIRE ALARM
FCIO	FURNISHED BY CONTRACTOR/ INSTALLED BY OWNER
FD	FLOOR DRAIN
FDC	FIRE DEPARTMENT CONNECTION
FDTN	FOUNDATION
FE	FIRE EXTINGUISHER
FEC	FIRE EXTINGUISHER CABINET
FH	FIRE HYDRANT
FHC	FIRE HOSE CABINET
FIG	FIGURE
FIN	FINISH, FINISHED
FLEX	FLEXIBLE
FLR	FLOOR, FLOORING
FLUOR	FLUORESCENT
FO	FACE OF, FINISHED OPENING
FOIC	FURNISHED BY OWNER/ INSTALLED BY CONTRACTOR
FP	FIRE PROTECTION, FIREPROOF
FR	FRAME, FIRE RATED
FRMG	FRAMING
FRP	FIBERGLASS REINFORCED PLASTIC
FRT	FIRE RETARDANT TREATED
FT	FOOT, FEET
FTG	FOOTING
FUT	FUTURE
FVC	FIRE HOSE VALVE CABINET
FWC	FABRIC WALL COVERING
FWP	FABRIC WRAPPED PANEL(S)
GA	GAGE
GALV	GALVANIZED
GEN	GENERAL, GENERATOR
GFRC	GLASS-FIBER REINFORCED CONCRETE
GFRG	GLASS-FIBER REINFORCED GYPSUM
GFRP	GLASS-FIBER REINFORCED PLASTIC
GL	GLASS
GYP	GYPSUM
GYP BD	GYPSUM BOARD
H	HIGH
HB	HOSE BIBB
HCWD	HOLLOW CORE WOOD
HD	HAND DRYER
HDBD	HARDBOARD
HDW	HARDWARE
HDWD	HARDWOOD
HM	HOLLOW METAL
HO	HOLD OPEN
HORIZ	HORIZONTAL
HR	HOUR
HSS	HOLLOW STRUCTURAL STEEL
HT	HEIGHT
HVAC	HEATING, VENTILATING, AND AIR CONDITIONING
ID	INSIDE DIAMETER
IGU	INSULATED GLASS UNIT
INCL	INCLUDE, INCLUDING
INFO	INFORMATION
INSUL	INSULATE, INSULATION
INT	INTERIOR
IWD	INDIRECT WASTE DRAIN
JAN	JANITOR
JT	JOINT
KIT	KITCHEN
L	LONG
LAM	LAMINATE, LAMINATED
LAU	LAUNDRY
LAV	LAVATORY
LT	LIGHT
LTG	LIGHTING
MAS	MASONRY
MATL	MATERIAL
MAX	MAXIMUM
MDF	MEDIUM DENSITY FIBERBOARD
MDO	MEDIUM DENISTY OVERLAY
MECH	MECHANICAL
MED	MEDIUM
MEMB	MEMBRANE
MEZZ	MEZZANINE
MGT	MANAGEMENT
MFR	MANUFACTURE, MANUFACTURER
MH	MANHOLE
MIN	MINIMUM, MINUTE
MISC	MISCELLANEOUS
MO	MASONRY OPENING
MS	MOP SINK
MTD	MOUNTED
MTL	METAL
MVBL	MOVABLE
MWP	METAL WALL PANELS
N	NORTH
NIC	NOT IN CONTACT
NO	NUMBER
NOM	NOMINAL
NRC	NOISE REDUCTION COEFFICIENT
NTS	NOT TO SCALE
OC	ON CENTER
OH	OVERHEAD
OD	OUTSIDE DIAMETER
OPNG	OPENING
OPP	OPPOSITE
ORD	OVERFLOW ROOF DRAIN
OTS	OPEN TO STRUCTURE ABOVE
PBD	PARTICLEBOARD
PRCST	PRECAST
PD	PLANTER DRAIN
PERP	PERPENDICULAR
PLAM	PLASTIC LAMINATE
PLAS	PLASTER
PLYWD	PLYWOOD
PNL	PANEL
PL	PROPERTY LINE
PR	PAIR
PRKG	PARKING
PROP	PROPERTY
PT	PAINT, POINT, PRESSURE TREATED
PTN	PARTITION
R	RADIUS, RISER
RCP	REFLECTED CEILING PLAN
RD	ROOF DRAIN, ROAD
RECEPT	RECEPTACLE
REF	REFER TO, REFERENCE
REF	REFRIGERATOR
REINF	REINFORCED, REINFORCING
REQD	REQUIRED
REV	REVISED, REVISION
RFG	ROOFING
RM	ROOM
RO	ROUGH OPENING
RT	RIGHT
S	SOUTH, SPANDREL
SCWD	SOLID CORE WOOD
SCHED	SCHEDULE
SD	STORM DRAIN
SECT	SECTION
SG	SAFETY GLASS
SGL	SINGLE
SHT	SHEET
SHTHG	SHEATHING
SIM	SIMILAR
SPEC	SPECIFICATION
SPKLR	SPRINKLER
SPKR	SPEAKER
SQ	SQUARE
SS	SERVICE SINK
SST	STAINLESS STEEL
STC	SOUND TRANSMISSION CLASS
STD	STANDARD
STL	STEEL
STOR	STORAGE
STRUCT	STRUCTURAL
SUSP	SUSPENDED
T	TREAD, TEMPERED
T&G	TONGUE AND GROOVE
TC	TRAFFIC COATING
TEL	TELEPHONE
TEMP	TEMPERATURE, TEMPORARY
TER	TERRAZZO
THK	THICK, THICKNESS
TO	TOP OF
TSTAT	THERMOSTAT
TV	TELEVISION
TYP	TYPICAL
UGND	UNDERGROUND
UNF	UNFINISHED
UON	UNLESS OTHERWISE NOTED
VERT	VERTICAL
VEST	VESTIBULE
VIF	VERIFY IN FIELD
VNR	VENEER
VR	VAPOR RETARDER
VWC	VINYL WALLCOVERING
W	WEST, WIDE, WIDTH
W/	WITH
W/O	WITHOUT
WC	WATER CLOSET, WALLCOVERING
WD	WOOD
WH	WALL HYDRANT
WP	WEATHERPROOF, WATERPROOF, WATERPROOFING, WORK POINT
WR	WATER RESISTANT
WT	WEIGHT
WWF	WELDED WIRE FABRIC
XMFR	TRANSFORMER
YD	YARD

GENERAL NOTES

1. DO NOT SCALE THE DRAWINGS.
2. VERIFY FIELD CONDITIONS PRIOR TO COMMENCEMENT OF EACH PORTION OF THE WORK.
3. THE CONTRACT DOCUMENTS ARE COMPLEMENTARY, AND WHAT IS REQUIRED BY ONE SHALL BE AS BINDING AS IF REQUIRED BY ALL. THE CONTRACTOR SHALL COORDINATE ALL PORTIONS OF THE WORK AS DESCRIBED IN THE CONTRACT DOCUMENTS NOTIFY THE ARCHITECT FOR RESOLUTION OF ALL DISCREPANCIES PRIOR TO CONSTRUCTION.
4. DIMENSIONS ARE TO THE STRUCTURAL GRID OR TO FINISH SURFACES, UNLESS OTHERWISE INDICATED.
5. DOORS AND CASED OPENINGS INDICATED NEARBY WALL INTERSECTIONS, SHALL BE LOCATED SO THAT THE EDGE OF THE FINISH OPENING IS SIX INCHES FROM THE FACE OF THE NEARBY WALL UNLESS OTHERWISE INDICATED. ALL OTHER DOORS AND CASED OPENINGS SHALL BE CENTERED BETWEEN ADJACENT WALL INTERSECTIONS.
6. ITEMS INDICATED AS BIDDER DESIGNED SHALL BE DESIGNED AND ENGINEERED BY THE CONTRACTOR AND/OR SUBCONTRACTOR IN COMPLIANCE WITH APPLICABLE LEGAL REQUIREMENTS, INCLUDING COMPREHENSIVE ENGINEERING ANALYSIS BY A QUALIFIED PROFESSIONAL ENGINEER, USING PERFORMANCE AND DESIGN CRITERIA INDICATED.

APPLICABLE CODES

ZONING:

SAN BERNARDINO COUNTY DEVELOPMENT CODE

CODE:

2013 CALIFORNIA BUILDING CODE (CBC), TITLE 24, PART 2

2013 CALIFORNIA FIRE CODE (CFC), TITLE 24, PART 9

2013 NATIONAL FIRE PROTECTION ASSOCIATION (NFPA), PART 13

2013 CALIFORNIA MECHANICAL CODE (CMC), TITLE 24, PART 4

2013 CALIFORNIA PLUMBING CODE (CPC), TITLE 24, PART 5

2013 CALIFORNIA ELECTRICAL CODE (CEC), TITLE 24, PART 3

2013 CALIFORNIA ENERGY CODE (CEC), TITLE 24, PART 6; SEE 2013 NON-RESIDENTIAL COMPLIANCE MANUAL FOR SUPPORT

2013 CALIFORNIA GREEN BUILDING STANDARDS CODE (CGBSC). TITLE 24, PART 11, APPLICABLE TO NEWLY CONSTRUCTED BUILDINGS.

CALIFORNIA CODE OF REGULATIONS (CCR)

SAN BERNARDINO COUNTY CODE OF ORDINANCES

ACCESSIBILIT:

CBC CHAPTER 11B ACCESSIBILITY TO PUBLIC BUILDINGS, PUBLIC ACCOMODATIONS, COMMERCIAL BUILDINGS AND PUBLIC HOUSING

BUILDING ADDRESS

145453 NATIONAL TRAILS HWY
NEEDLES, CA 92363

MAP COORDINATION
34.714779, -114.490808

SCOPE OF WORK

NEW, 1 STORY NON-COMBUSTIBLE OFFICE BUILDING. METAL STUDS AND SLOPED METAL ROOF.

VICINITY MAP

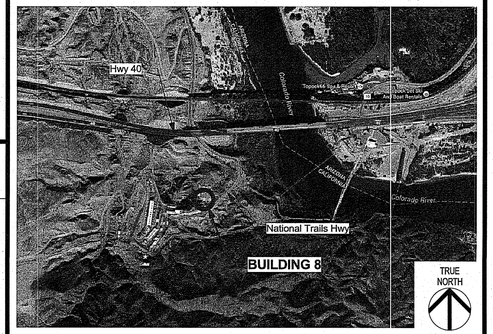

SITE MAP

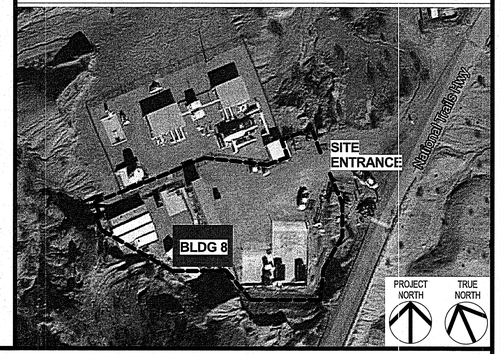

PROJECT DIRECTORY

OWNER:
ARCADIS U.S., INC.
100 MONTGOMERY, SUITE 300
SAN FRANSISCO, CALIFORNIA 94104

CONTACT:
KRISTIN MANCINI
(415) 432-6908
KRISTIN.MANCINI@ARCADIS-US.COM

ARCHITECT:
CALLISONRTKL INC.
1420 FIFTH AVENUE, SUITE 2400
SEATTLE, WA 98101-2343
(206) 623-4646

PROJECT CONTACT:
ADAM SEGALLA
ADAM.SEGALLA@CALLISON.COM

REVIT MODEL CONTACT:
KATHRYN KILTY
KATHRYN.KILTY@CALLISON.COM

STRUCTURAL ENGINEER:
KPFF
1601 FIFTH AVENUE, SUITE 1600
SEATTLE, WASHINGTON 98101

PROJECT CONTACT:
ANDY EWING
(206) 926-0494
ANDY.EWING@KPFF.COM

REVIT MODEL CONTACT:
ADAM RADKE
(206) 622-5822
ADAM.RADKE@KPFF.COM

MECHANICAL ENGINEER:
RTKL ASSOCIATES, INC.
901 SOUTH BOND STREET
BALTIMORE, MARYLAND 21231
(410) 537-6000

CONTACT:
HARDEEP SINGH
(410) 537-6064
HSINGH@RTKL.COM

PLUMBING ENGINEER:
RTKL ASSOCIATES, INC.
901 SOUTH BOND STREET
BALTIMORE, MARYLAND 21231

CONTACT:
HARDEEP SINGH
(410) 537-6064
HSINGH@RTKL.COM

ELECTRICAL ENGINEER:
ARCADIS U.S., INC.
222 SOUTH MAIN ST, SUITE 300
AKRON, OHIO 44308

CONTACT:
JOHN SIDOTI
JOHN.SIDOTI@ARCADIS-US.COM

FRISCH ENGINEERING, INC.
13405 FOLSOM BLVD., UNIT 600
FOLSOM, CA 95630
(916) 353-1025

CONTACT:
MARTIN YARBROUGH
(916) 835-9714
MYARBROUGH@FRISCHENGINEERING.COM

CIVIL ENGINEER:
ARCADIS U.S., INC.
126 NORTH JEFFERSON ST # 400
MILWAUKEE, WI 53202

CONTACT:
JONATHAN BAXTER
(414) 277-6257
JONATHAN.BAXTER@ARCADIS.COM

TELECOMMUNICATION:
ARCADIS U.S., INC.
100 MONTGOMERY, SUITE 300
SAN FRANSISCO, CALIFORNIA 94104

ENVIRONMENT:
ARCADIS U.S., INC.
100 MONTGOMERY, SUITE 300
SAN FRANSISCO, CALIFORNIA 94104

UTILITIES:
PG&E

DRAWING INDEX

03 ARCHITECTURE

A-08-00	GENERAL INFORMATION	
A-08-01	CODE ANALYSIS	
A-08-02	CALGREEN CHECKLIST	
A-08-03	EXTERIOR PERSPECTIVES	
A-08-04	OVERALL SITE PLAN	
A-08-05	EXIT PLAN	
A-08-06	LEVEL 1 FLOOR PLAN	
A-08-07	LOW ROOF PLAN	
A-08-08	HIGH ROOF PLAN	
A-08-09	LEVEL 1 REFLECTED CEILING PLAN	
A-08-10	RESTROOM ENLARGED FLOOR PLAN	
A-08-11	MENS RESTROOM INTERIOR ELEVATIONS	
A-08-12	WOMENS RESTROOM INTERIOR ELEVATION	
A-08-13	EXTERIOR ELEVATIONS	
A-08-14	EXTERIOR ELEVATIONS	
A-08-15	INTERIOR ELEVATIONS	
A-08-16	BUILDING SECTIONS	
A-08-17	BUILDING SECTIONS	
A-08-18	BUILDING SECTIONS	
A-08-19	WALL SECTIONS	
A-08-20	WALL SECTIONS	
A-08-21	WALL/PARTITION TYPES	
A-08-22	EXTERIOR DETAILS	Not Submitted
A-08-23	EXTERIOR DETAILS	Not Submitted
A-08-24	INTERIOR DETAILS	Not Submitted
A-08-25	INTERIOR DETAILS	Not Submitted
A-08-26	OPENINGS SCHEDULES, ELEVATIONS AND DETAILS	Not Submitted
A-08-27	FINISH MATERIAL SCHEDULES AND LEGENDS	Not Submitted
A-08-28	CASEWORK PLAN, ELEVATION, SECTIONS AND DETAILS	Not Submitted

04 STRUCTURAL

S-08-01	GENERAL NOTES AND DRAWING LIST	
S-08-02	GENERAL NOTES, ABBREVIATIONS, AND SYMBOLS	
S-08-03	SPECIAL INSPECTIONS	Not Submitted
S-08-04	SPECIAL INSPECTIONS	Not Submitted
S-08-05	FOUNDATION AND LEVEL 1 PLAN	
S-08-06	LOWER ROOF FRAMING PLAN	
S-08-07	UPPER ROOF FRAMING PLAN	
S-08-08	SECTIONS AND ELEVATIONS	
S-08-09	TYPICAL CONCRETE DETAILS	
S-08-10	CONCRETE DETAILS	
S-08-11	STEEL AND WOOD DETAILS	
S-08-12	STEEL AND WOOD DETAILS	
S-08-13	STEEL AND WOOD DETAILS	Not Submitted
S-08-14	TYPICAL COLD-FORMED DETAILS	
S-08-15	TYPICAL COLD-FORMED DETAILS	

05 MECHANICAL

M-08-00	LEGEND AND ABBREVIATIONS	
M-08-01	MECHANICAL FLOOR PLAN	
M-08-03	SCHEDULES AND DETAILS	

06 PLUMBING

P-08-00	PLUMBING LEGEND, ABBREVIATIONS, & NOTES	
P-08-01	PLUMBING FLOOR PLAN	
P-08-02	PLUMBING SCHEDULES	

- FINAL DESIGN -
FOR AGENCY APPROVAL ONLY

LICENSED ARCHITECT
PAUL R. MAKOWSKI
C-33907
6-30-17
RENEWAL DATE
STATE OF CALIFORNIA

11/11/2015 2:05:03 PM
D:\1. LOCAL FILES\2. Mission Critical\Topock\Revit Files\TOPOCK-8_A_r2015 admin-2015-11-04.rvt

CALLISONRTKL
A DESIGN CONSULTANCY OF ARCADIS

ARCADIS

NO.	DATE	DESCRIPTION	GM/SPEC	DWN	CHKD	SUPV	APVD BY
0	11/11/2015	FINAL DESIGN		KK	AS	RC	RAO

REVISIONS

APPROVED BY		
RAO	SO	
	SUPV	RC
	DSGN	CALLISON
	DWN	KK
	CHKD	AS
	OK	
	DATE	11/18/2015
	SCALES	As indicated

TOPOCK GROUNDWATER REMEDIATION PROJECT
OPERATION BUILDING (BUILDING 8)

GENERAL INFORMATION
GAS TRANSMISSION & DISTRIBUTION
PACIFIC GAS AND ELECTRIC COMPANY
SAN FRANCISCO, CALIFORNIA

MICROFILM	
BILL OF MATL	
DWG LIST	
SUPSDS	
SUPSD BY	
SHEET NO.	of SHEETS
A-08-00	REV 0

N1808

006-151658.00

COPYRIGHT © 2015 CALLISON

INSULATION REQUIREMENTS

ROOFS:

STANDING SEAM METAL ROOF WITH R-30 (U= 0.034)

TERRACOTTA STANDING METAL ROOF WITH COOL ROOF RATING : X, EMITTANCE : X, AND REFLECTANCE : X

SLAB ON GRADE:

NO INSULATION IN PERIMETER F=0.73

WALLS:

R-19 BATT INSULATION
WITH R-12 RIGID INSULATION (2 INCH) U=0.057

FENESTRATIONS AND DOORS:

WINDOWS: U VALUE = U=0.38 AND SHGC = 0.25 (VERIFY PER FINAL SELECTION BUT THE SELECTION SHALL BE BETTER THAN THE NUMBERS IF POSSIBLE)

INSULATED METAL DOOR = U=0.7 (VERIFY IF WE CAN GET BETTER PRODUCT)

NOTES:

1- PLEASE REFER TO DETAIL PERFORMANCE CALCULATION IN TITLE 24

PLUMBING REQUIREMENTS

OCCUPANT LOAD FACTOR (CPC TABLE A)

GROUP B (1630 SF)	200 SF / OCCUPANT	9 OCCUPANTS (5) MALE, (5) FEMALE

MINIMUM PLUMBING FACILITIES - GROUP B (CPC TABLE 422.1)

FIXTURE REQUIRED	MALE	FEMALE	TOTAL
WATER CLOSET	1	1	2
URINAL	–	N/A	–
LAVATORY	1	1	2
DRINKING FOUNTAIN	1		1
SERVICE SINK	1		1

FIXTURE PROVIDED	MALE	FEMALE	TOTAL
WATER CLOSET	1	2	3
URINAL	1	N/A	1
LAVATORY	2	2	4
DRINKING FOUNTAIN	2		2
SERVICE SINK	1		1

FIRE SAFETY CODES

2013 CALIFORNIA FIRE CODE (CFC), TITLE 24, PART 9

FIRE EXTINGUISHERS:
CCR TITLE 19 DIVISION 1 CHAPTER 3 - PORTABLE FIRE EXTINGUISHERS

FIRE SPRINKLER STANDARD:
2013 NFPA 13 – INSTALLATION OF SPRINKLER SYSTEMS

FIRE ALARM STANDARD:
2013 NFPA 72 – NATIONAL FIRE ALARM CODE

EXIT SIGNS:
2009 NFPA 170 – STANDARD FOR FIRE SAFETY AND EMERGENCY SYMBOLS

HAZARD IDENTIFICATION STANDARD:
2012 NFPA 704 – STANDARD SYSTEM FOR IDENTIFICATION OF THE HAZARDS OF MATERIALS FOR EMERGENCY RESPONSE

FIRE DOORS:
1997 UL10B – FIRE TEST FOR DOOR ASSEMBLIES;
2013 NFPA 80 – FIRE DOORS AND OTHER OPENING PROTECTIVES

PANIC HARDWARE:
2007 UL 305 – PANIC HARDWARE

FIRE DAMPERS
2008 UL 555 – FIRE DAMPERS

CABINETS
2005 UL 1275 – FLAMMABLE LIQUID STORAGE CABINETS

FIRE PROTECTION

SPRINKLERS (CBC SECT 903)	YES
FIRE EXTINGUISHERS (SECT 906)	2A (75' MAX. TRAVEL DISTANCE)
DISTANCE TO FIRE HYDRANT (TABLE CC105.1)	250'

FIRE RATINGS

(TABLE 601)

STRUCTURAL FRAME	0 HR
EXTERIOR BEARING WALLS	0 HR
INTERIOR BEARING WALLS	0 HR
INTERIOR NON-BEARING WALLS	0 HR
FLOOR CONSTRUCTION	0 HR
ROOF CONSTRUCTION	0 HR
SHAFT ENCLOSURE (707.4)	0 HR
STAIRWAY ENCLOSURE (1019.1)	0 HR
CORRIDOR (TABLE 1018.1)	0 HR (SPRINKLERED)
ALLOWABLE AREA OF EXTERIOR DOORS AND WINDOWS (704.8)	UNLIMITED
OCCUPANCY SEPARATIONS (508.3.3)	N/A
INCIDENTAL USE AREAS (508.2)	N/A
ACCESSORY USE AREAS (508.3.1)	N/A
NON-SEPARATED USE (508.3.2)	N/A
FIRE SEPARATION DISTANCE (TABLE 602)	30'
DISTANCE FROM ADJACENT BUILDING OR PROPERTY LINE (TABLE 602)	>30'

EXIT REQUIREMENTS

MAX.TRAVEL DISTANCE ALLOWED: (TABLE 1016.2)	200 FT
MAX. COMMON PATH TRAVEL: (TABLE 1014.3)	75 FT
MAX. DEAD ENDS: (1018.4)	50 FT (SPRINKLERED)
CORRIDOR WIDTH (TABLE 1018.2):	36"
MIN. EGRESS WIDTH (1005.1):	36"

PROJECT DESCRIPTION

NEW 1 STORY OFFICE BUILDING

GENERAL INFORMATION

USE AND OCCUPANCY GROUP (CBC CHAPTER 3)	B (BUSINESS)
CONSTRUCTION TYPE (CBC CHAPTER 6)	II-B (NON COMBUSTIBLE MATERIALS)

AREAS AND HEIGHTS LIMITATIONS

	ALLOWABLE (TABLE 503)	PROVIDED
AREA PER STORY	23,000 SF.	1,630 SF.
MAXIMUM STORIES	3	1
MAXIMUM HEIGHT	55'	21'

APPLICABLE CODES

ZONING:

SAN BERNARDINO COUNTY DEVELOPMENT CODE

CODE:

2013 CALIFORNIA BUILDING CODE (CBC), TITLE 24, PART 2

2013 CALIFORNIA FIRE CODE (CFC), TITLE 24, PART 9

2013 NATIONAL FIRE PROTECTION ASSOCIATION (NFPA), PART 13

2013 CALIFORNIA MECHANICAL CODE (CMC), TITLE 24, PART 4

2013 CALIFORNIA PLUMBING CODE (CPC), TITLE 24, PART 5

2013 CALIFORNIA ELECTRICAL CODE (CEC), TITLE 24, PART 3

2013 CALIFORNIA ENERGY CODE (CEC), TITLE 24, PART 6; SEE 2013 NON-RESIDENTIAL COMPLIANCE MANUAL FOR SUPPORT

2013 CALIFORNIA GREEN BUILDING STANDARDS CODE (CGBSC). TITLE 24, PART 11, APPLICABLE TO NEWLY CONSTRUCTED BUILDINGS.

CALIFORNIA CODE OF REGULATIONS (CCR)

SAN BERNARDINO COUNTY CODE OF ORDINANCES

ACCESSIBILIT:

CBC CHAPTER 11B ACCESSIBILITY TO PUBLIC BUILDINGS, PUBLIC ACCOMODATIONS, COMMERCIAL BUILDINGS AND PUBLIC HOUSING

INTERIOR FINISHES

(CBC 803.9)

OCCUPANCY:	B
AREA:	1,630 SF
CLASS:	C

- FINAL DESIGN - FOR AGENCY APPROVAL ONLY

LICENSED ARCHITECT PAUL A. MAKOWICKY C-33907 6-30-17 RENEWAL DATE STATE OF CALIFORNIA

CALLISONRTKL A DESIGN CONSULTANCY OF ARCADIS

ARCADIS

NO.	DATE	DESCRIPTION	GM/SPEC	DWN	CHKD	SUPV	APVD BY
0	11/11/2015	FINAL DESIGN	KK	AS	RC	RAO	

REVISIONS

APPROVED	
EY	
RAO	

SO	
SUPV	RC
DSGN	CALLISCN
DWN	KK
CHKD	AS
OK	
DATE	11/18/2015
SCALES	

TOPOCK GROUNDWATER REMEDIATION PROJECT
OPERATION BUILDING (BUILDING 8)

CODE ANALYSIS
GAS TRANSMISSION & DISTRIBUTION
PACIFIC GAS AND ELECTRIC COMPANY
SAN FRANCISCO, CALIFORNIA

MICROFILM	
BILL OF MATL	
DWG LIST	
SUPSDS	
SUPSD BY	
SHEET NO.	of SHEETS
A-08-01	REV 0

006-151658.00

COPYRIGHT © 2015 CALLISON

D:\1. LOCAL FILES\2. Mission Critical\Topock\Revit Files\TOPOCK-8_A_v2015 admin-20151-1-HA.rvt 11/11/2015 3:58:59 PM

N180B

SECTION A5.602

NONRESIDENTIAL OCCUPANCIES APPLICATION CHECKLISTS

Application Checklist for BSC	Mandatory	
Requirements		
Project meets all of the requirements of Divisions 5.1 through 5.5	☒	
Site development		
5.106.1 Storm water pollution prevention. Newly constructed projects and additions which disturb less than one acre of land shall prevent the pollution of storm water runoff from the construction activities through local ordinance in Section 5.106.1.1 Or Best management practices (BMP) in Section 5.106.1.1	☒	See Civil Drawings
5.106.4 Bicycle Parking. For buildings within the authority of California Building Standards Commission as specified in Section 103, comply with Section 5.106.4.1. For buildings within the authority of the Division of the State Architect pursuant of Section 105, comply with Section 5.06.4.2.	☒	Not Applicable
5.106.4.1 Bicycle Parking. (BSC) Comply with Sections of 5.106.4.1.1 and 5.106.4.1.2; or meet the applicable local ordinance, whichever is stricter.	☒	Not Applicable
Short-term bicycle parking. (BSC) If the new project or addition or alteration is anticipated to generate visitor traffic, provide permanently anchored bicycle racks within 200 feet of the visitors' entrance, readily visible to passers-by, for 5 percent of new visitor motorized vehicle parking spaces being added, with a minimum of one two-bike capacity rack. **Exception:** Additions or alterations which add nice or fewer visitor vehicular parking spaces.	☒	Not Applicable
5.106.4.1.2 Long-term bicycle parking. For buildings with over 10 tenant-occupants or for additions or alterations that add 10 or more tenant vehicular parking spaces, provide secure bicycle parking for 5 percent of tenant-occupied motorized vehicle parking spaces being added, with a minimum or one space. Acceptable parking facilities shall be convenient from the street and shall meet of one of the following: 1. Covered, lockable enclosures with permanently anchored racks for bicycles; 2. Lockable bicycle rooms with permanently anchored racks; or 3. lockable, permanently anchored bicycle lockers **Note:** Additional information on recommended bicycle accommodations may be obtained from Sacramento Area Bicycle Advocates.	☒	Not Applicable
A5.106.4.3 Changing rooms. For buildings with over 10 tenant-occupants, provide changing/shower facilities in accordance with Table A5.106.4.3 or document arrangements with nearby changing/shower facilities.	☒	Not Applicable
5.106.5.2 Designated parking. In new projects or additions or alterations that add 10 or more vehicular parking spaces, provide designated parking for any combination of low-emitting, fuel-efficient and carpool/van pool vehicles as shown in Table 5.106.5.2.	☒	Not Applicable
5.106.5.2.1 Parking stall marking. Paint, in the paint used for stall striping, the following characters such that the lower edge of the last word aligns with the end of the stall striping and is visible beneath a parked vehicle: CLEAN AIR/ VANPOOL/EV **Note:** Vehicles bearing Clean Air Vehicle stickers from expired HOV lane programs may be considered eligible for designated parking spaces.	☒	Not Applicable
5.106.5.3 Electric vehicle (EV) charging. [N] Construction shall comply with Section 5.106.5.3.1 or Section 5.106.5.3.2 to facilitate future installation of electric vehicle supply equipment (EVSE). **5.106.5.3.1 Single charging space requirements. [N]** **5.106.5.3.2 Multiple charging spaces requirements. [N]** **5.106.5.3.3 EV charging space calculation. [N]** per Table 5.106.5.3.3 (approx. 3%) **5.106.5.3.4 [N] Identification.** **5.106.5.3.5** [N] EV spaces count as designated parking. **A5.106.5.3.1 Tier 1.** Per Table A5.106.5.3.1 (approx. 4%)	☒	Not Applicable
5.410.2.1 Owner's Project Requirements (OPR). [N] Documented before the design phase of the project begins the OPR shall include items listed in Section 5.410.4.	☒	Not Applicable
5.410.2.2 Basis of Design (BOD). [N] A written explanation of how the design of the building systems meets the OPR shall be completed at the design phase of the building project to cover the systems listed in Section 5.410.2.2.	☒	Not Applicable
5.410.2.3 Commissioning plan. [N] A commissioning plan describing how the project will be commissioned shall include item listed in Section 5.410.2.3.	☒	Not Applicable
5.410.2.4 [N] Functional performance texting shall demonstrate the correct installation and operation of each component, system and system-to-system interface in accordance with the approved plans and specifications.	☒	Not Applicable
5.410.2.5 Documentation and training. [N] A Systems manual and systems operations training are required. **5.410.2.5.1 Systems Manual. [N]** The systems manual shall be delivered to the building owner or representative and facilities operator and shall include the items listed in Section 5.41.2.5.1. **5.410.2.5.2 Systems operations training. [N]** A program for training of the appropriate maintenance staff for each equipment type and/or system shall be developed and shall include items listed in Section 5.410.2.5.2. **5.410.2.6 Commissioning report. [N]** A report of commissioning process activities undertaken through the design and construction phases of the building project shall be completed and provided to the owner or representative.	☒ ☒ ☒	Not Applicable Not Applicable Not Applicable
5.410.4 Testing and adjusting. Testing and adjusting of systems shall be required for building less than 10,000 square feet. Applies to new systems serving additions or alterations.	☒	See Arch DWGS
5.410.4.2 Systems. Develop a written plan of procedure for testing and adjusting systems. Systems to be included for testing and adjusting shall include, as applicable to the project, the systems listed in Section 5.410.4.2.	☒	See Arch DWGS
5.410.4.3 Procedures. Perform testing and adjusting procedures in accordance with applicable standards on each system as determined by the enforcing agency.	☒	See Arch DWGS
5.410.4.4 HVAC balancing. Before a new space-conditioning system serving a building or space is operated for normal use, balance in accordance with the procedures defined by national standards listed in Section 5.410.4.3.1 or as approved by the enforcing agency.	☒	See Arch DWGS
5.410.4.4 Reporting. After completion of testing, adjusting and balancing, provide a final report of testing signed by the individual responsible for performing these services.	☒	See Arch DWGS
5.410.4.5 Operation and maintenance manual. Provide the building owner with detailed operating and maintenance instructions and copies of guaranties/warranties for each system prior to final inspection.	☒	See Arch DWGS
5.410.4.5.1 Inspections and reports. Include a copy of all inspection verifications and reports required by the enforcing agency.	☒	See Arch DWGS
Environmental Quality		
Fireplaces		
5.503.1 Install only a direct-vent sealed-combustion gas or sealed wood-burning fireplace or a sealed woodstove and refer to residential requirements in the California Energy Code, Title 24, Part 6, Subchapter 7, Section 150.	☒	Not Applicable
5.503.1.1 Woodstoves. Woodstoves shall comply with US EPA Phase II emission limits, where applicable.	☒	Not Applicable
Pollutant Control		
A5.504.1 Indoor air quality (IAQ) during construction. Maintain IAQ as provided in Sections A5.504.1.1 and A5.504.1.2 **A5.504.1.1 Temporary ventilation.** Provide temporary ventilation during construction in accordance with Section 121 of the California Energy Code, CCR, Title 24, Part 6 and Chapter 4 of CCR, Title 8 and as listed Items 1 and 2 in Section A5.504.1.2. **A5.504.1.2 Additional IAQ measures.** Employ additional measures as listed in Items 1 through 5 in Section A5.504.1.3.		

A5.106.5.3.1 Tier 2. Per Table A5.106.5.3.2 (approx. 6%)		
5.106.8 Light pollution reduction. [N] Outdoor lighting systems shall be designed and installed to comply with the following: 1. The minimum requirements in the California Energy Code and lighting Zones 1-4 as defined in Chapter 10 of the *California Administrative Code*; and 2. Backlight, Uplight and Glare (BUG) ratings as defined in IESNA TM-15-11; and 3. Allowable BUG ratings not exceeding those shown in Table 5.106.8, or Comply with a local ordinance lawfully enacted pursuant to Section101.7, whichever is more stringent. **Exceptions: [N]** 1. Luminares that qualify as exceptions in Section 140.7 of the *California Energy Code* 2. Emergency lighting **Notes: [N]** See also *California Building Code*, Chapter 12, Section 1205.6 for college campus lighting requirements for parking facilities and walkways.	☒ or ☒	See Architecture sheet See Architecture sheet
5.106.10 Grading and paving. Construction plans shall indicate how site grading or a drainage system will manage all surface water flows to keep water of entering buildings. Examples of method to manage surface water include those shown in Items 1-5. See exception for additions or alterations.	☒	
Energy Efficiency		
Performance Requirements		
5.201.1 Scope. Building meets or exceeds the requirements of the California Building Energy Efficiency Standards. 3	☒	See Architecture sheet A-003
Water Efficiency and Conservation		
Indoor Water Use		
5.303.1 Meters. Separate meters shall be installed for the uses described in Sections 5.303.1.1 and 5.303.1.2.	☒	
5.303.1.1 New buildings or additions in excess of 50,000 square feet. Separate submeters shall be installed as follows: 1. For each individual leased, rented or other tenant space within the building projected to consume more than 100 gal/day, including, but not limited to, spaces used for laundry or cleaners, restaurant or food service, medical or dental office, laboratory, or beauty salon or barbershop. 2. Where separate submeters for individual building tenants are unfeasible, for water supplied to the following subsystems: a. Makeup water for cooling towers where flow through is greater than 500 gpm (30 L/s) b. Makeup water for evaporative coolers greater than 6 gpm (0.04L/s) c. Steam and hot-water boilers with energy input more than 500,000 Btu/h (147kW)	☒ ☒ ☒	Not Applicable Not Applicable Not Applicable
5.303.1.2 Excess consumption. A separate submeter or metering device shall be provided for any tenant within a new building or an addition that is projected to consume more than 1,000 gal/day (3800 L/day).	☒	Not Applicable
5.303.3 Water Conserving plumbing fixtures and fittings. Plumbing fixtures (water closets and urinals) and fittings (faucets and showerheads) shall comply with the following:	☒	See Plumbing
5.303.3.1 Water closets. The effective flush volume of all water closets shall not exceed 1.28 gallons per flush. Tank-type water closets shall be certified to the performance criteria of the U.S. EPA WaterSense Specification for Tank-Type Toilets. **Note:** The effective flush volume of dual flush toilets is defined as the composite, average flush volume of two reduced flushes and one full flush.	☒	See Plumbing
5.303.3.2 Urinals. The effective flush volume of urinals shall not exceed 0.5 gallons per flush.	☒	See Plumbing
5.303.3.3 Showerheads. **5.303.3.3.1 Single showerhead.** Showerheads shall have a maximum flow rate of not more than 2.0 gallons per minute at 80 psi. Showerheads shall have a maximum flow rate of not more than 2.0 gallons per minute of 80 psi.	☒	Not Applicable
5.504.1.3 Temporary ventilation. If the HVAC system is used during construction, use return air filters with a MERV of 8, based on ASHRAE 52.2-1999, or an average efficiency of 30% based on ASHRAE 52.1-1992. Replace all filters immediately prior to occupancy. Applies to additions or alterations.	☒	See Arch DWGS
5.504.3 Covering of duct opening and protection of mechanical equipment during construction. At the time of rough installation and during storage on the construction site and until final startup of the heating, cooling and ventilating equipment, all duct and other related air distribution component openings shall be covered with tape, plastic, sheet metal or other methods acceptable to the enforcing agency to reduce the amount of dust, water and debris which may enter the system.	☒	See Arch DWGS
5.504.4 Finish material pollutant control. Finish materials shall comply with Sections 5.504.4.1 through 5.504.4.4. **5.504.4.1 Adhesives, sealants, caulks.** Adhesives and sealants used on the project shall meet the requirements of the following standards. 1. Adhesives, adhesive bonding primers, adhesive primers, sealants, sealant primers and caulks shall comply with local or regional air pollution control or air quality management's district rules where applicable or SCAQMD Rule 1168 VOC limits, as shown in Tables 5.504.4.1 and 5.504.4.2. 2. Aerosol adhesives and smaller unit sizes of adhesives and sealant of caulking compounds (in units of product, less packaging, which do not weight more than one pound and do not consist of more than 16 fluid ounces) shall comply with statewide VOC standards and other requirements, including prohibitions on use of certain toxic compounds, of California Code of Regulations, Title 17, commencing with Section 94507.	☒ ☒	See Arch DWGS See Arch DWGS
5.504.4.3 Paints and coatings. Architectural paints and coatings shall comply with Table 5.504.4.3 unless more stringent local limits apply. **5.504.4.3.1 Aerosol paints and coatings.** Aerosol paints and coatings shall meet the Product- Weighted MIR Limits for ROC in Section 94522 (a)(3) and other requirements, including prohibitions on use of certain toxic compounds and ozone depleting substances(CCR, Title 17, Section 94520, et seq.). **5.504.4.3.2 Verification.** Verification of compliance with this section shall be provided at the request of the enforcing agency.	☒ ☒ ☒	See Arch DWGS See Arch DWGS See Arch DWGS
5.504.4.4 Carpet systems. All carpet installed in the building interior shall meet the testing and product requirements of one of the standards listed in Section 5.504.4.4. **5.504.4.4.1 Carpet cushion.** All carpet cushion installed in the building interior shall meet the requirements of the Carpet and Rug Institute's Green Label program. **5.504.4.4.2 Carpet adhesive.** All carpet adhesive shall meet the requirements of Table 5.504.4.1.	☒ ☒ ☒	Not Applicable Not Applicable Not Applicable
5.504.4.5 Composite Wood products. Hardwood plywood, particleboard and medium density fiberboard composite wood products used on the interior or exterior of the building shall meet the requirements for the formaldehyde as specified in Table 5.504.4.5. **A5.504.4.5.1 No added formaldehyde, Tier 2.** Use composite wood products approved by the ARB as no-added formaldehyde (NAF) based resins or ultra-low emitting formaldehyde (ULEF) resins. **5.504.5.3 Documentation.** Verification of compliance with this section shall be provided as requested by the enforcing agency. Documentation shall include at least one of the following: 1. Product certifications and specifications. 2. Chain of custody certifications. 3. Product labelod and invoiced as meeting the Composite Wood Products regulation (see CCR, Title 17, Section 93120, et seq.). 4. Exterior grade products marked as meeting the PS-1 or PS-2 standards of the Engineered Wood Association, the Australian AS/NZS 2269 or European 636 3S standards. 5. Other methods acceptable to the enforcing agency.	☒ ☒ ☒ ☒ ☒ ☒ ☒	

Showerheads shall be certified to the performance criteria of the U.S. EPA WaterSense Specification for showerheads. **5.303.3.3.2 Multiple showerheads serving one shower.** When a shower is served by more than one showerhead, the combined flow rate of all showerheads and/or other shower outlets controlled by a single valve shall not exceed 2.0 gallons per minute at 80 psi, or the shower shall be designed to allow only one shower outlet to be in operation at a time. **Note:** A hand-held shower shall be considered a showerhead.	☒	Not Applicable
5.303.4 Areas of additions or alteration. For those occupancies within the authority of the California Building Standards Commission as specified in Section 103, the provisions of Section 5.303.3 shall apply to new fixtures in additions or areas of alterations to the building.	☒	Not Applicable
A5.303.5 Dual Plumbing. New buildings and facilities shall be dual plumbing for potable and recycled water systems for toilet flushing when recycled water is available as determined by the enforcement authority.	☒	
5.303.6 Standards for plumbing fixtures and fittings. Plumbing fixtures and fittings shall be installed in accordance with the *California Plumbing Code*, and shall meet the applicable standards referenced in Table 1401.1 of the California Plumbing Code and in Chapter 6 of this code.	☒	See Plumbing
Outdoor Water Use		
5.304.1 Water Budget. A water budget shall be developed for landscaped irrigation use. Applies to additions or alterations.	☒	Not Applicable
5.304.2 Outdoor potable water use. For new water service, separate meters or submeters shall be installed for indoor and outdoor potable water use for landscaped areas of at least 1,000 square feet but not more than 5,000 square feet, separate submeters shall be installed for outdoor potable water use. Applies to additions or alterations. A5.304.2.1 Outdoor potable water use. For new water service not subject to the provisions of Water Code Section 525, separate meters of submeters shall be installed for outdoor potable water use for landscaped areas of at least 500 square feet but not more than 1,000 square feet (the level at which Section 5.304.2 applies).	☒	Not Applicable
5.304.3.1 Irrigation design. In new nonresidential projects with at least 1,000 square feet but not more than 2,500 square feet of landscaped area (the level at which the MLO applies), install irrigation controllers and sensors which include the following criteria and meet manufacturer's recommendations. Applies to additions or alterations.	☒	Not Applicable
5.304.3.1 Irrigation controllers. Automatic irrigation system controllers installed at the time of final inspection shall comply with the following: **1. Controller shall be weather – or soil moisture-based controllers that automatically adjust irrigation in response to changes in plants' needs as weather conditions change.** **2. Weather – based controllers without integral rain sensors or communication systems that account for local rainfall shall have a separate wired or wireless rain sensor which connects or communications with the controller(s). Soil moisture-base controllers are not required to have rain sensor input.**	☒	Not Applicable
Weather Resistance and Moisture Management		
5.407.1 Weather protection. Provide a weather-resistant exterior wall and foundation envelope as required by California Building Code, Section 1403.2 and California Energy Code, Section 150, manufacturer's installation instructions or local ordinance, whichever is more stringent.	☒	See Architecture drawing
5.407.2 Moisture control. Employ moisture control measures by the following methods; **5.407.2.1 Sprinklers.** Design and maintain landscape irrigation systems to prevent irrigation spray on structures. **5.407.2.2 Entries and openings.** Design exterior entries and opening to prevent water intrusion into buildings as follows **5.407.2.2.1 Exterior door protection.** Primary exterior entries shall be covered to prevent water intrusion by using nonabsorbent floor and wall finishes within as least 2 feet around and perpendicular to such opening plus at least one of the following: 1. An installed awning at least 4 feet in depth 2. The door is protected by a roof overhang at least 4 feet in depth 3. The door is recessed at least 4 feet. 4. Other method which provide equivalent protection. **5.407.2.2.2 Flashing.** Install flashings integrated with a drainage plane.	☒ ☒ ☒	Not Applicable See Architecture Drawing See Architecture Drawing
Construction Waste Reduction, Disposal and Recycling		
5.408.1 Construction waste management. Recycle and/or salvage for reuse a minimum of 50% of the non-hazardous construction waste in accordance with Section 5.408.1.1, 5.408.1.2 or 5.401.1.3; or meet a local construction and demolition waste management ordinance, whichever is more stringent. **5.408.1.1 Construction waste management plan.** Where a local jurisdiction does not have a construction and demolition waste management ordinance that is more stringent, submit a construction waste management plan that complies with Items 1 through 4 of this section. **5.408.1.2 Waste management company.** Utilize a waste management company that can provide verifiable documentation that the percentage of construction waste material diverted from the landfill complies with this section. **Exceptions to Section 5.408.1.1 and 5.408.1.2:** 1. Excavated soil and land- clearing debris 2. Alternate waste reduction methods developed by working with local agencies if diversion or recycle facilities capable of compliance with this item do not exist. 3. Demolition waste meeting local ordinance or calculated in consideration of local recycling facilities and markets. **5.408.1.4 Documentation.** Provide documentation of the waste management plan that meets the requirements listed in Sections 5.408.1.1 through 5.408.1.3, and the plan is accessible to the enforcement authority. **5.408.1.3 Waste stream reduction alternative.** The combined weight of new construction disposal that does not exceed two pounds per square foot of building area may by deems to meet the 50 percent minimum requirement as approved by the enforcing agency. **5.408.3 Excavated soil and land clearing debris.** 100 percent of trees, stumps, rocks and associated vegetation and soils resulting primarily from land clearing shall be reused or recycled. **Exception:** Reuse, either on-or off-site, of vegetation of soil contaminated by disease or pest infestation.	☒ ☒ ☒ ☒ ☒	See Arch DWG See Arch DWG See Arch DWG See Arch DWG See Arch DWG
Building Maintenance and Operation		
5.410.1.1 Recycling by occupants. Provide readily accessible areas that serve the entire building and are identifies for the depositing, storage and collection of nonhazardous materials for recycling. **5.410.1.1 Additions. [A]** All additions conducted within a 12-month period under single or multiple permits, resulting in an increase of 30 percent or more in floor area, shall provide recycling area on site. **Exception:** Additions within a tenant space resulting in less than a 30-percent increase in the tenant space floor area.	☒	See Arch DWG
5.410.2 Commissioning. [N] For new building 10,000 square feet and over, building commissioning for all building systems covered by Title 24, Part 6, process systems and renewable energy systems shall be included in the design and construction processes of the building project. Commissioning requirements shall include items listed in Section 5.410.2. **Exceptions:** 1. Unconditioned warehouses of any size 2. Areas less than 10,000 square feet used for offices of other conditioned accessory spaces within unconditioned warehouses. 3. Tenant improvements less than 10,000 square feet as described in Section 303.1.1. 4. Commissioning requirements for energy systems covered by the *California Energy Code*. 5. Open parking garages of any size, or open parking garage areas of any size, within a structure.	☒	Not Applicable

5.504.4.6 Resilient flooring systems. For 80 percent of floor area receiving resilient flooring, install resilicnt flooring which meets one of the following: 1. Certified under the Resilient Floor Covering Institute (RFCI) FloorScore program; 2. Compliant with the VOC-emission limits and testing requirements specified in the California Department of Public Health's 2010 Standard Method of the Testing and Evaluation Chambers, Version 1.1, February 2010; 3. Compliant with the Collaborative for High Performance Schools California (CA-CHPS) Criteria Interpretation for EQ7.0 and 7.1 (formerly EQ. 2.2) dated July 2012 and listed in the CHPS High Performance Product Database; or 4. Products certified under UL GREENGUARD Gold (formerly the Greenguard Children's & Schools Program). **A5.504.4.6.1 Verification of compliance.** Documentation shall be provided verifying that resilicnt flooring material mcet the pollutant emission limits.	☒ ☒	See Arch DWG See Arch DWG
A5.504.5 Hazardous particulates and chemical pollutants. Minimize and control pollutant entry into buildings and cross-contamination of regularly occupied areas. **A5.504.5.3 Filters.** In mechanically ventilated buildings, provide regularly occupied areas of the building with air filtration media for outside and return air that provides at least a MERV of 8. MERV 8 filters shall be installed prior to occupancy, and recommendations for maintenance with filters of the same value shall be included in the operation and maintenance manual. **Exceptions:** 1. An ASHRAE 10-percent to 15-percent efficiency filter shall be permitted for an HVAC unit meeting the 2013 California Energy Code having 60,000 Btu/h or less capacity per fan coil, if the energy use of the air delivery system is 0.4 W/cfm or less at design air flow. 2. Exist mechanical equipment. **5.504.5.3.1 Labeling.** Installed filters shall be clearly labeled by the manufacturer indicating the MERV rating.	☒	See Arch DWG
5.504.7 Environmental tobacco smoke (ETS) control. Prohibit smoking within 25 feet of building entries, outdoor air intakes and operable windows where outdoor areas are provided for smoking and within the building as already prohibited by other laws or regulations; or as enforced by ordinances, regulations or policies of any city, county, city and county, California Community College, campus of the California State University or campus of the University of California, whichever are more stringent.	☒	See Arch DWG
Indoor Moisture and Radon Control		
5.505.1 Indoor moisture control. Buildings shall meet or exceed the provisions of *California Building Code*, CCR, Title 24, Part 2, Sections 1203 and Chapter 14.1.	☒	See Arch DWG
Air Quality and Exhaust		
5.506.1 Outside air delivery. For mechanically or naturally ventilated spaces in buildings, meet the minimum requirements of Section 120.1 of the *California Energy Code* and Chapter 4 of CCR, Title 8 or the applicable local code, whichever is more stringent.	☒	See Arch DWG
5.506.2 Carbon dioxide (CO2) monitoring. For buildings or additions equipped with demand control ventilation, CO2 sensors and ventilation controls shall be specified and installed in accordance with the requirements of the *California Energy Code*, CCR, Section 120C(4). 3	☒	See Arch DWG
5.507.4 Acoustical control. Employ building assemblies and components with STC values determined in accordance with ASTM E 90 and ASTM E413 or OITC determined in accordance with ASTM E 1332, using either the prescriptive or performance method in Section 5.507.4.1 or 5.507.4.2. **5.507.4.1 Exterior noise transmission, prescriptive method.** Wall and floor-ceiling assemblies exposed to the noise source making up the building envelope shall have exterior wall and rood ceiling assemblies meeting a composite STC rating of at least 50 or a composite OITC rating of no less than 40 with exterior windows of a minimum STC of 40 or OITC of 30 in the locations described in Items 1 and 2. Also applies to addition envelope or altered envelope. **5.507.4.1.1 Noise exposure** where noise contours are not readily available. Buildings expose to a noise level of 65 dB L_{eq}- 1Hr during any hour of operation shall have exterior wall and rood-ceiling assemblies exposed to the noise source meeting a composite STC rating of at least 45 (or OITC 35), with exterior windows of a minimum STC of 40 (or OITC 30). Also applies to addition or alteration exterior wall. **5.507.4.2 Performance method.** For buildings located as defined in Sections A5.507.4.1 or A5.507.4.1.1, wall and roof–ceiling assemblies making up the building envelope shall be constructed to provide an interior noise environment attributable to exterior sources that does not exceed an hourly equivalent noise level (L_{eq}- 1Hr) of 50 dBA in occupied areas during any hour of operation. Also applies to addition envelope or altered envelope. **5.507.4.2.1 Site features.** Exterior features such as sound walls or eath berms may be utilized as appropriate to the project to mitigate sounds migration to the interior. Also applies to addition envelope or altered envelope. **5.507.4.2.1 Documentation of compliance.** An acoustical analysis documenting complying interior sound levels shall be prepared by personnel approved by the architect or engineer of record. **5.507.4.3 Interior sound transmission.** Wall and floor-ceiling assemblies separating tenant spaces and tenant spaces and public places shall have an STC of at least 40.	☒ ☒ ☒ ☒	See Arch DWG See Arch DWG See Arch DWG See Arch DWG
Outdoor Air Quality		
5.508.1 Ozone depletion and global warming reductions. Installations of HVAC, refrigeration and fire suppression equipment shall comply with Sections 5.508.1.1 and 5.508.1.2. **5.508.1.1 CFCs.** Install HVAC and refrigeration equipment that does not contain CFCs. 3 **5.508.1.2 Halons.** Install fire suppression equipment that does not contain Halons.[1] **A5.508.1.3 Hydrochlorofluorocarbons (HCFCs).** Install HVAC and refrigeration equipment that does not contain HCFCs. **A5.508.1.4 Hydrofluorocarbons (HFCs).** Install HVAC complying with either of the following: 1. Install HVAC, refrigeration and fire suppression equipment that do not contain HFCs or that do not contain HFCs with a global warming potential greater than 150. 2. Install HVAC and refrigeration equipment that limit the use of HFC refrigerant through the use of a secondary heat transfer fluid with a global warming potential no greater than 1.	☒ ☒	See Arch DWG See Arch DWG
5.508.2 Supermarket refrigerant leak reduction. New commercial refrigeration systems shall comply with the provisions of this section when installed in retail food 8,000 square feet or more conditioned area, and that utilize either refrigerated display cases, or walk-in coolers or freezers connected to remote compressor units or condensing units. The leak reduction measures apply to refrigeration systems containing high-global-warming potential (high-GWP) refrigerants with a GWP of 150 or greater. New refrigeration systems include both new facilities and the replacement of existing refrigeration systems in existing facilities. Exception: Refrigeration systems containing low-global warming potential (low-GWP) refrigerant with a GWP valuc less than 150 are not subject to this section. Low-GWP refrigerants are nonozone-depleting refrigerants that include ammonia, carbon dioxide (CO_2), and potentially other refrigerants.	☒	Not Applicable

- FINAL DESIGN - FOR AGENCY APPROVAL ONLY

LICENSED ARCHITECT PAUL R. MAKOWSKI C-33907 6-30-17 RENEWAL DATE STATE OF CALIFORNIA

CALLISONRTKL A DESIGN CONSULTANCY OF ARCADIS

ARCADIS

NO.	DATE	DESCRIPTION	GM/SPEC	DWN	CHKD	SUPV	APVD BY
0	11/11/2015	FINAL DESIGN		KK	AS	RC	RAO

REVISIONS

APPROVED BY: RAO

SO
SUPV RC
DSGN CALLISON
DWN KK
CHKD AS
OK
DATE 11/18/2015
SCALES

TOPOCK GROUNDWATER REMEDIATION PROJECT
OPERATION BUILDING (BUILDING 8)

CALGREEN CHECKLIST
GAS TRANSMISSION & DISTRIBUTION
PACIFIC GAS AND ELECTRIC COMPANY
SAN FRANCISCO, CALIFORNIA

MICROFILM
BILL OF MATL
DWG LIST
SUPSDS
SUPSD BY
SHEET NO. A-08-02 of SHEETS
REV 0

N1808

006-151658.00

COPYRIGHT © 2015 CALLISON

D:\1. LOCAL FILES\2. Mission Critical\Topock\Revit Files\TOPOCK5_A_v2015 sdlam-2015-11-04.rvt
11/18/2015 2:05:19 PM

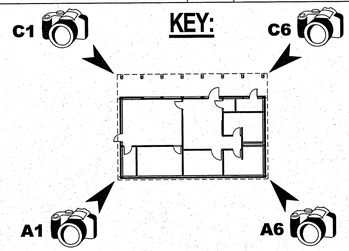

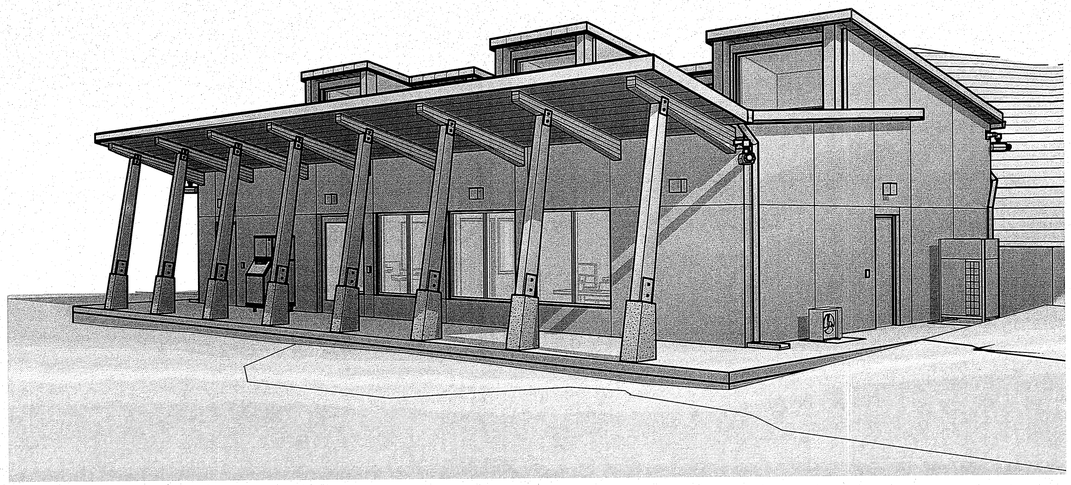

C1 PERSPECTIVE VIEW FROM NW

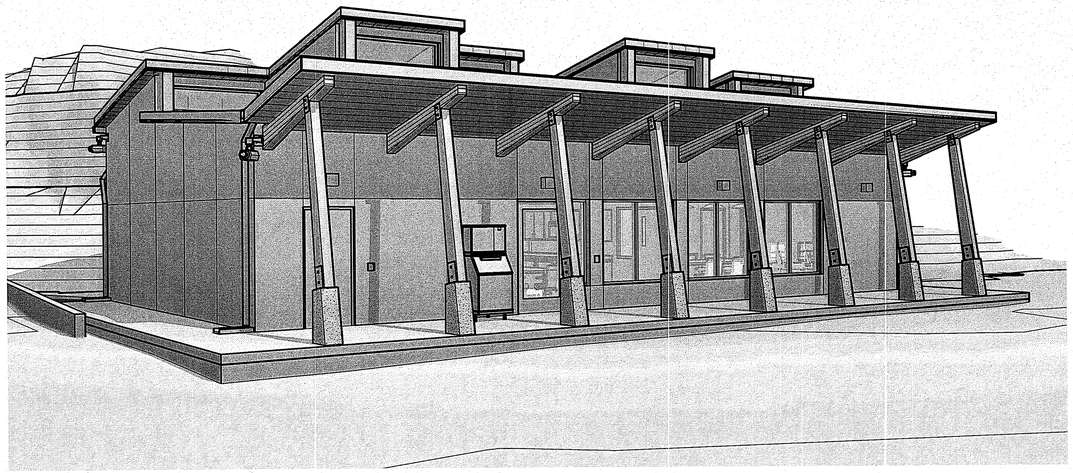

C6 PERSPECTIVE VIEW FROM NE

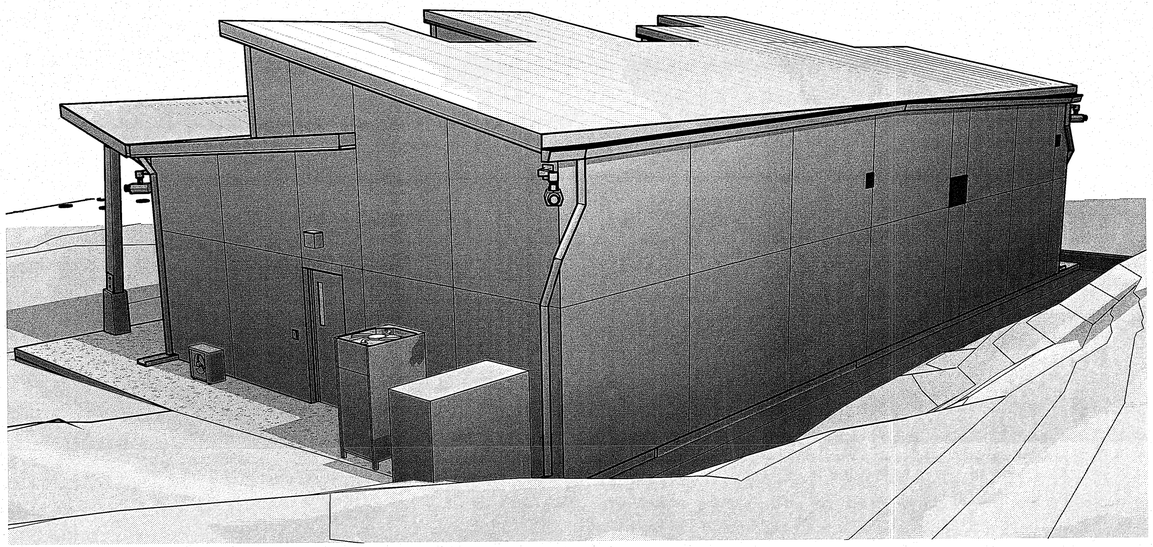

A1 PERSPECTIVE VIEW FROM SW

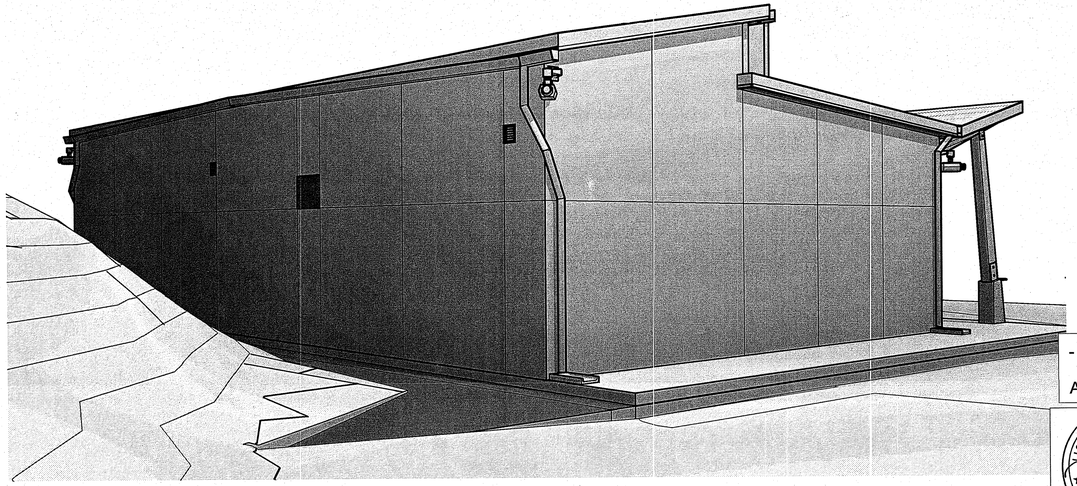

A6 PERSPECTIVE VIEW FROM SE

- FINAL DESIGN -
FOR AGENCY
APPROVAL ONLY

LICENSED ARCHITECT
PAUL R. MAKOWICKI
C-33907
6-30-17
RENEWAL DATE
STATE OF CALIFORNIA

CALLISONRTKL
A DESIGN CONSULTANCY OF ARCADIS

ARCADIS

NO.	DATE	DESCRIPTION	GM/SPEC	DWN	CHKD	SUPV	APVD BY
0	11/11/2015	FINAL DESIGN		KK	AS	RC	RAO

REVISIONS

APPROVED BY: RAO

SO	
SUPV	RC
DSGN	CALLISON
DWN	KK
CHKD	AS
OK	
DATE	11/18/2015
SCALES	

TOPOCK GROUNDWATER REMEDIATION PROJECT
OPERATION BUILDING (BUILDING 8)

EXTERIOR PERSPECTIVES
GAS TRANSMISSION & DISTRIBUTION
PACIFIC GAS AND ELECTRIC COMPANY
SAN FRANCISCO, CALIFORNIA

MICROFILM	
BILL OF MATL	
DWG LIST	
SUPSDS	
SUPSD BY	
SHEET NO.	of SHEETS
A-08-03	REV 0

N1808

006-151658.00

COPYRIGHT © 2015 CALLISON

D11, LOCAL FILES2, Mission Critical\Topock\Revit Files\TOPOCK8_A_2015 sdam-2015-11-04.rvt 11/11/2015 2:05:46 PM

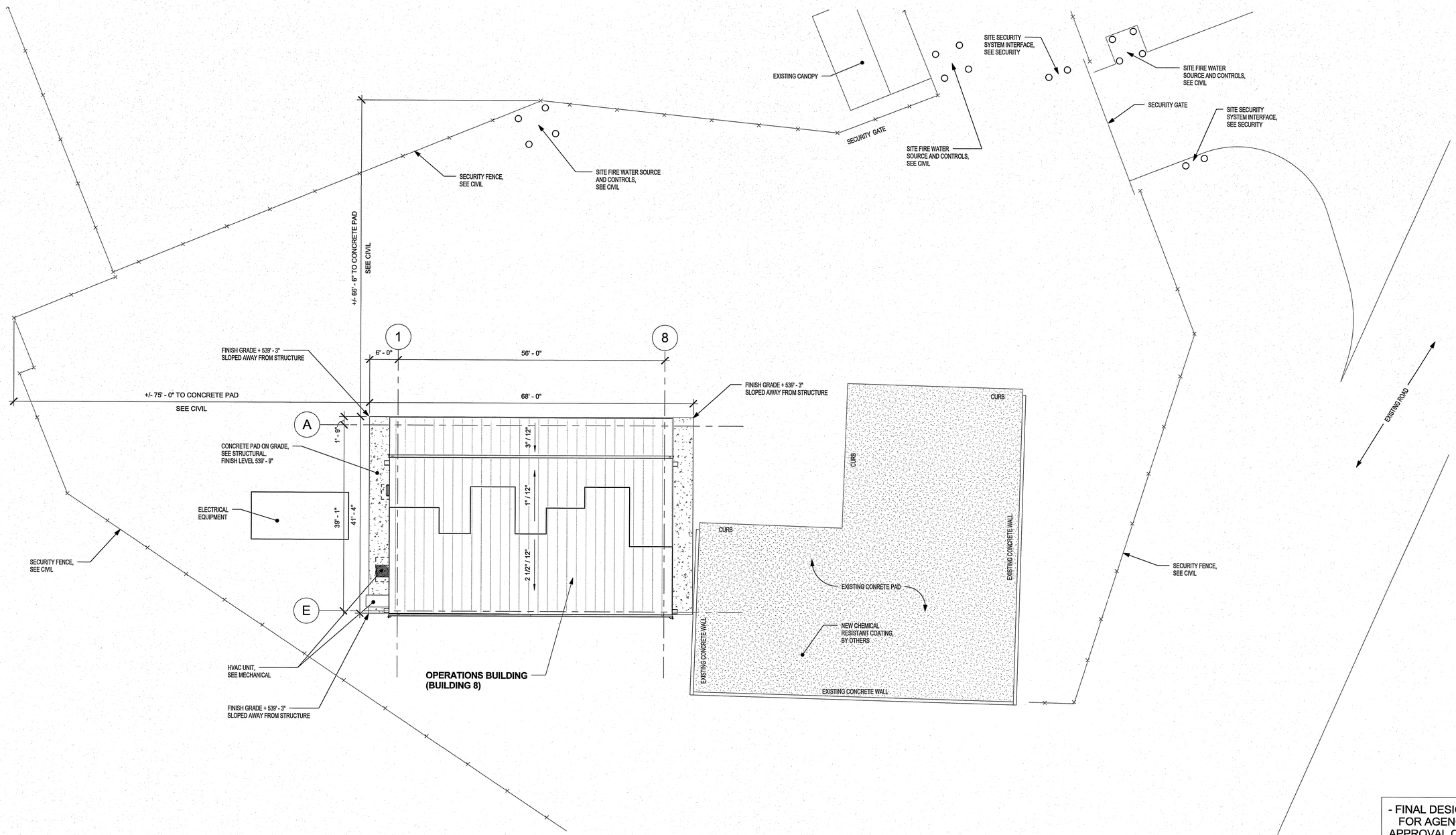

A1 OVERALL SITE PLAN

3/32" = 1'-0"

SCALE: 3/32" = 1'-0"
AT: 22"x 34"

0 10' 20' 40'

PROJECT NORTH TRUE NORTH

- FINAL DESIGN - FOR AGENCY APPROVAL ONLY

LICENSED ARCHITECT PAUL R. MAKOWIECKI C-33907 6-30-17 RENEWAL DATE STATE OF CALIFORNIA

CALLISONRTKL A DESIGN CONSULTANCY OF ARCADIS

ARCADIS

NO.	DATE	DESCRIPTION	GM/SPEC	DWN	CHKD	SUPV	APVD BY
0	11/11/2015	FINAL DESIGN	KK	AS	RC	RAO	

REVISIONS

APPROVED BY	
RAO	SO
	SUPV RC
	DSGN CALLISON
	DWN KK
	CHKD AS
	QK
	DATE 11/18/2015
	SCALES 3/32" = 1'-0"

TOPOCK GROUNDWATER REMEDIATION PROJECT
OPERATION BUILDING (BUILDING 8)

OVERALL SITE PLAN
GAS TRANSMISSION & DISTRIBUTION
PACIFIC GAS AND ELECTRIC COMPANY
SAN FRANCISCO, CALIFORNIA

MICROFILM	
BILL OF MATL	
DWG LIST	
SUPSDS	
SUPSD BY	
SHEET NO.	of SHEETS
A-08-04	REV 0

N1808

006-151658.00

COPYRIGHT © 2015 CALLISON

D11, LOCAL FILES\2. Mission Drills\Topock\Revit Files\TOPOCK4_A_central 2015-1-1-64.rvt 11/11/2015 2:05:47 PM

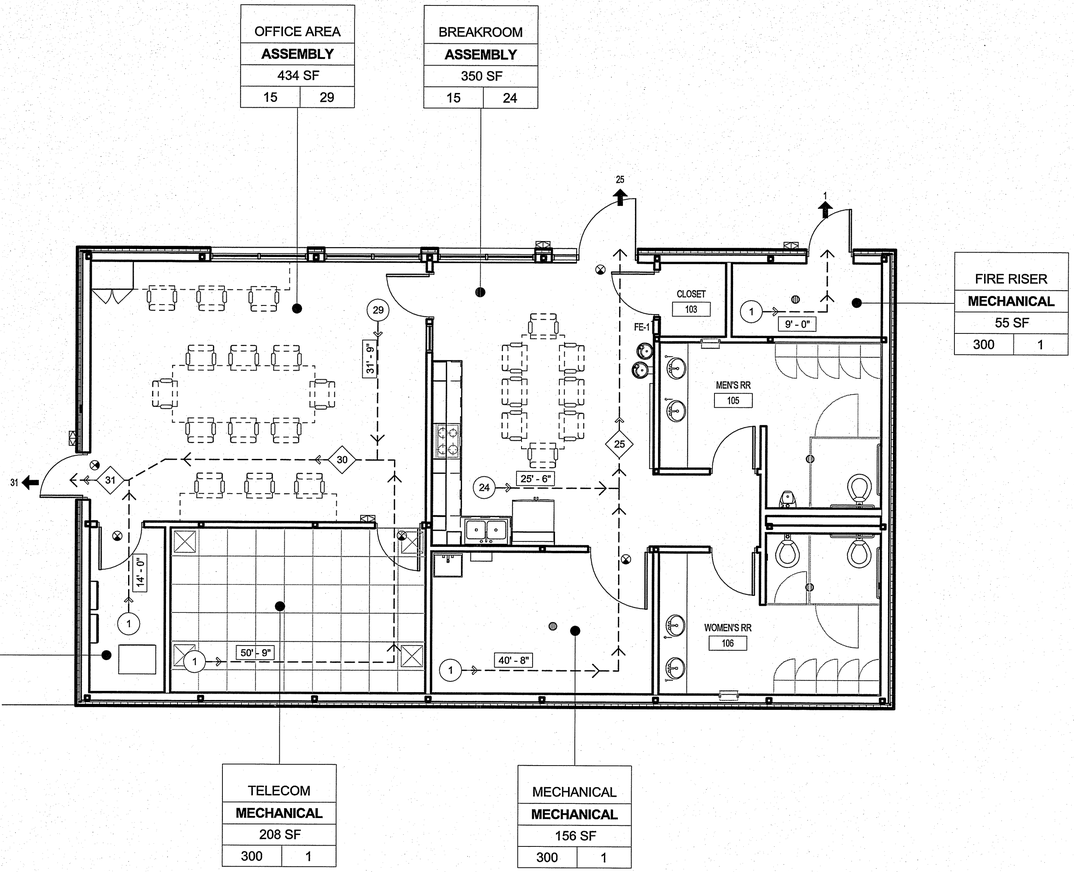

B2 LEVEL 1 EXIT PLAN

3/16" = 1'-0"

SCALE: 3/16" = 1'-0"
AT: 22"x 34"

0 5' 10' 20'

EXIT PLAN LEGEND

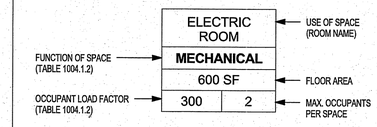

XX	OCCUPANT LOAD / SPACE
XX	CUMULATIVE OCCUPANT LOAD / PATH
XX	OCCUPANT LOAD / BUILDING EXIT POINT
	EXIT ACCESS PATH (COMMON PATH OF TRAVEL)
XXX'-X"	TRAVEL DISTANCE
	EXIT SIGN
FE-1	FIRE EXTINGUISHER CABINET WITH MULTI PURPOSE DRY CHEMICAL FIRE EXTINGUISHER.

EXIT REQUIREMENTS

MAX.TRAVEL DISTANCE ALLOWED: (TABLE 1016.2)	200 FT	
MAX. COMMON PATH TRAVEL: (TABLE 1014.3)	75 FT	
MAX. DEAD ENDS: (1018.4)	50 FT	(SPRINKLERED)
CORRIDOR WIDTH (TABLE 1018.2):	36"	
MIN. EGRESS WIDTH (1005.1):	36"	

FIRE PROTECTION

SPRINKLERS (CBC SECT 903)	YES
FIRE EXTINGUISHERS (SECT 906)	2A (75' MAX. TRAVEL DISTANCE)
DISTANCE TO FIRE HYDRANT (TABLE CC105.1)	250'

FIRE RATINGS

(TABLE 601)

STRUCTURAL FRAME	0 HR	
EXTERIOR BEARING WALLS	0 HR	
INTERIOR BEARING WALLS	0 HR	
INTERIOR NON-BEARING WALLS	0 HR	
FLOOR CONSTRUCTION	0 HR	
ROOF CONSTRUCTION	0 HR	
SHAFT ENCLOSURE (707.4)	0 HR	
STAIRWAY ENCLOSURE (1019.1)	0 HR	
CORRIDOR (TABLE 1018.1)	0 HR	(SPRINKLERED)
ALLOWABLE AREA OF EXTERIOR DOORS AND WINDOWS (704.8)	UNLIMITED	
OCCUPANCY SEPARATIONS (508.3.3)	N/A	
INCIDENTAL USE AREAS (508.2)	N/A	
ACCESSORY USE AREAS (508.3.1)	N/A	
NON-SEPARATED USE (508.3.2)	N/A	
FIRE SEPARATION DISTANCE (TABLE 602)	30'	
DISTANCE FROM ADJACENT BUILDING OR PROPERTY LINE (TABLE 602)	>30'	

- FINAL DESIGN -
FOR AGENCY APPROVAL ONLY

LICENSED ARCHITECT PAUL R. MAKOWIECKI C-33907 6-30-17 RENEWAL DATE STATE OF CALIFORNIA

CALLISONRTKL A DESIGN CONSULTANCY OF ARCADIS

ARCADIS

N1808

NO.	DATE	DESCRIPTION	GM/SPEC	DWN	CHKD	SUPV	APVD BY
0	11/11/2015	FINAL DESIGN		KK	AS	RC	RAO

REVISIONS

APPROVED BY	
RAO	SO
	SUPV RC
	DSGN CALLISON
	DWN KK
	CHKD AS
	OK
	DATE 11/18/2015
	SCALES As indicated

TOPOCK GROUNDWATER REMEDIATION PROJECT
OPERATION BUILDING (BUILDING 8)

EXIT PLAN
GAS TRANSMISSION & DISTRIBUTION
PACIFIC GAS AND ELECTRIC COMPANY
SAN FRANCISCO, CALIFORNIA

006-151658.00

MICROFILM	
BILL OF MATL	
DWG LIST	
SUPSDS	
SUPSD BY	
SHEET NO.	of SHEETS
A-08-05	REV 0

COPYRIGHT © 2015 CALLISON

D:\1. LOCAL FILES\2. Mission Critical\Topock\Revit Files\TOPOCK4_A_2015 adam 2015-11-04.rvt
11/11/2015 2:05:48 PM

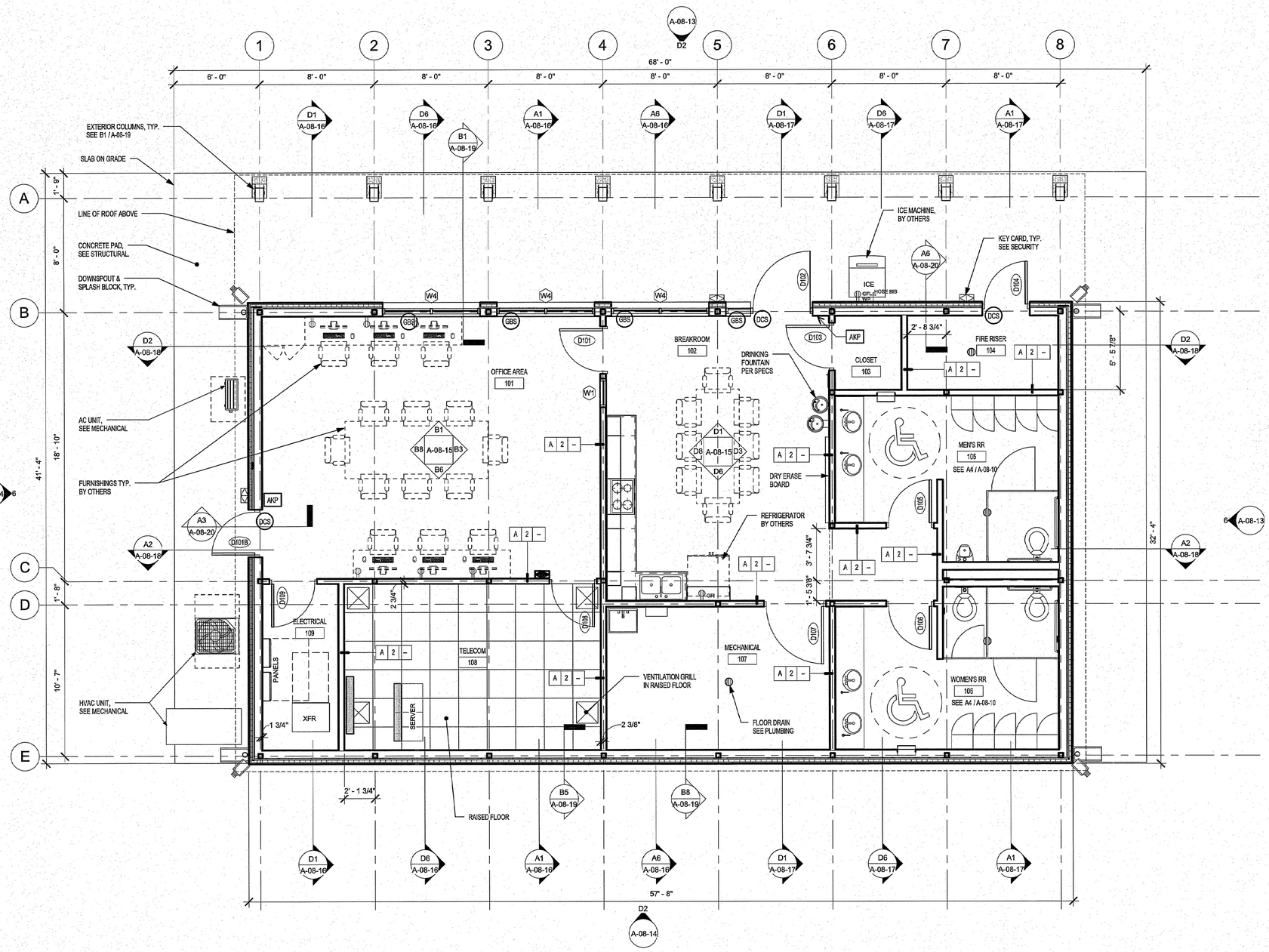

SECURITY LEGEND

- CAMERA FIXED
- CARD READER
- SECURITY EQUIPMENT BACKBOARD / RACK
- DCS — DOOR CONTACT SENSOR
- GBS — GLASS BREAK SENSOR
- AKP — ALARM KEYPAD

A2 LEVEL 1 FLOOR PLAN
1/4" = 1'-0"

SCALE: 1/4" = 1'-0"
AT: 22"x 34"
0 4' 8' 16'

- FINAL DESIGN -
FOR AGENCY
APPROVAL ONLY

LICENSED ARCHITECT PAUL R. MAKOWICKI C-33907 6-30-17 RENEWAL DATE STATE OF CALIFORNIA

CALLISONRTKL
A DESIGN CONSULTANCY OF ARCADIS

ARCADIS

NO.	DATE	DESCRIPTION	GM/SPEC	DWN	CHKD	SUPV	APVD BY
0	11/11/2015	FINAL DESIGN		KK	AS	RC	RAO

REVISIONS

APPROVED BY: RAO

SO	
SUPV	RC
DSGN	CALLISON
DWN	KK
CHKD	AS
OK	
DATE	11/18/2015
SCALES	1/4" = 1'-0"

TOPOCK GROUNDWATER REMEDIATION PROJECT
OPERATION BUILDING (BUILDING 8)

LEVEL 1 FLOOR PLAN
GAS TRANSMISSION & DISTRIBUTION
PACIFIC GAS AND ELECTRIC COMPANY
SAN FRANCISCO, CALIFORNIA

MICROFILM
BILL OF MATL
DWG LIST
SUPSDS
SUPSD BY
SHEET NO. of SHEETS
A-08-06 REV 0

006-151658.00

COPYRIGHT © 2015 CALLISON

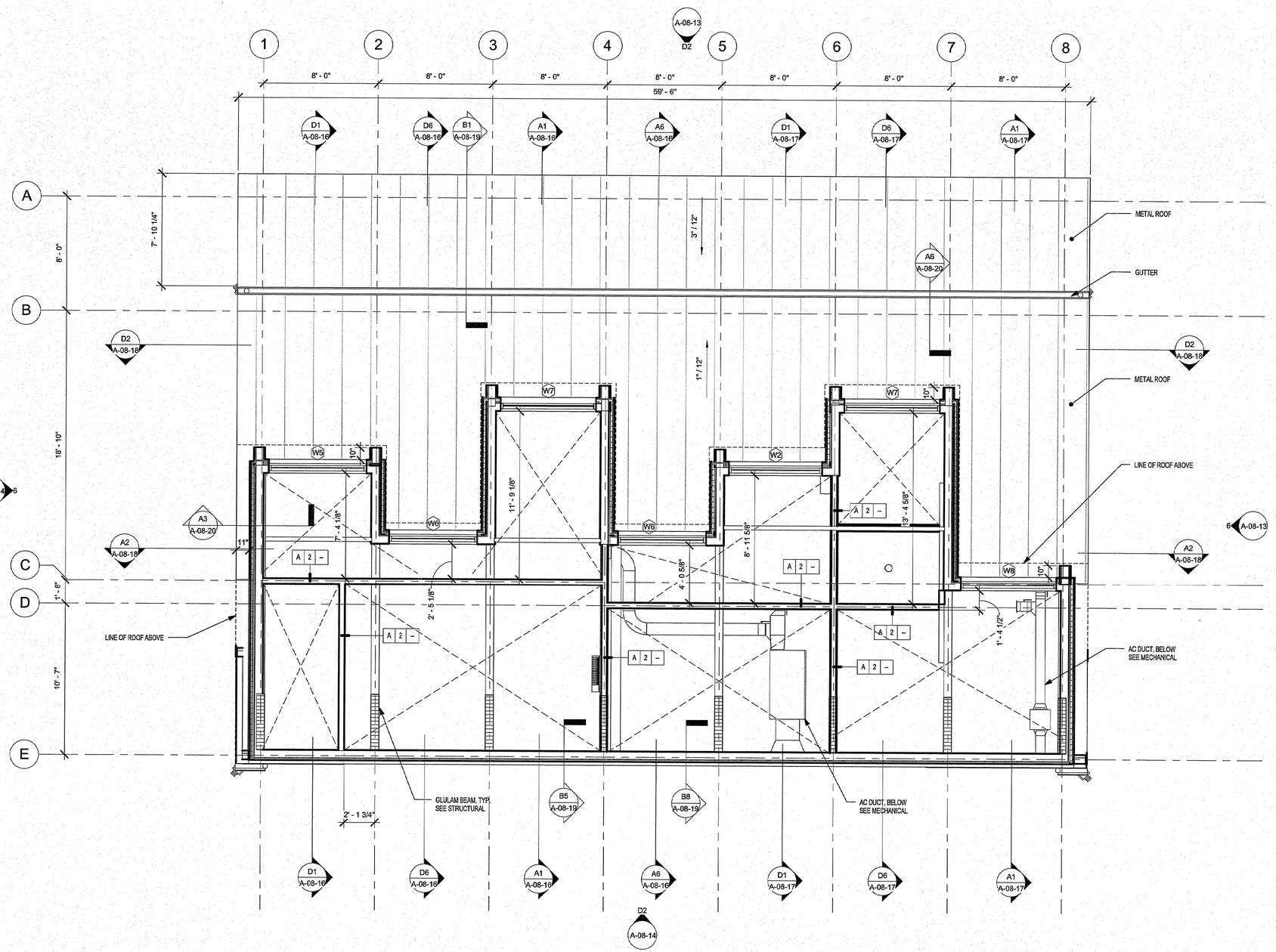

A2 LOW ROOF PLAN
1/4" = 1'-0"

- FINAL DESIGN - FOR AGENCY APPROVAL ONLY

LICENSED ARCHITECT RAJU R. MAKOWSKI C-33907 6-30-17 RENEWAL DATE STATE OF CALIFORNIA

SCALE: 1/4" = 1'-0"
AT: 22"x 34"
0 4' 8' 16'

CALLISONRTKL A DESIGN CONSULTANCY OF ARCADIS
ARCADIS

NO.	DATE	DESCRIPTION	GM/SPEC	DWN	CHKD	SUPV	APVD BY
0	11/11/2015	FINAL DESIGN	KK	AS	RC	RAO	

REVISIONS

APPROVED BY	
RAO	

SO	
SUPV	RC
DSGN	CALLISON
DWN	KK
CHKD	AS
OK	
DATE	11/18/2015
SCALES	1/4" = 1'-0"

TOPOCK GROUNDWATER REMEDIATION PROJECT
OPERATION BUILDING (BUILDING 8)

LOW ROOF PLAN
GAS TRANSMISSION & DISTRIBUTION
PACIFIC GAS AND ELECTRIC COMPANY
SAN FRANCISCO, CALIFORNIA

MICROFILM	
BILL OF MATL	
DWG LIST	
SUPSDS	
SUPSD BY	
SHEET NO.	of SHEETS
A-08-07	REV 0

006-151658.00

COPYRIGHT © 2015 CALLISON

N1808

D:\1. LOCAL FILES\2. Mission Critical\Topock\Revit Files\TOPOCK_8_A_v2015 adam 2015-11-04.rvt
11/11/2015 2:05:50 PM

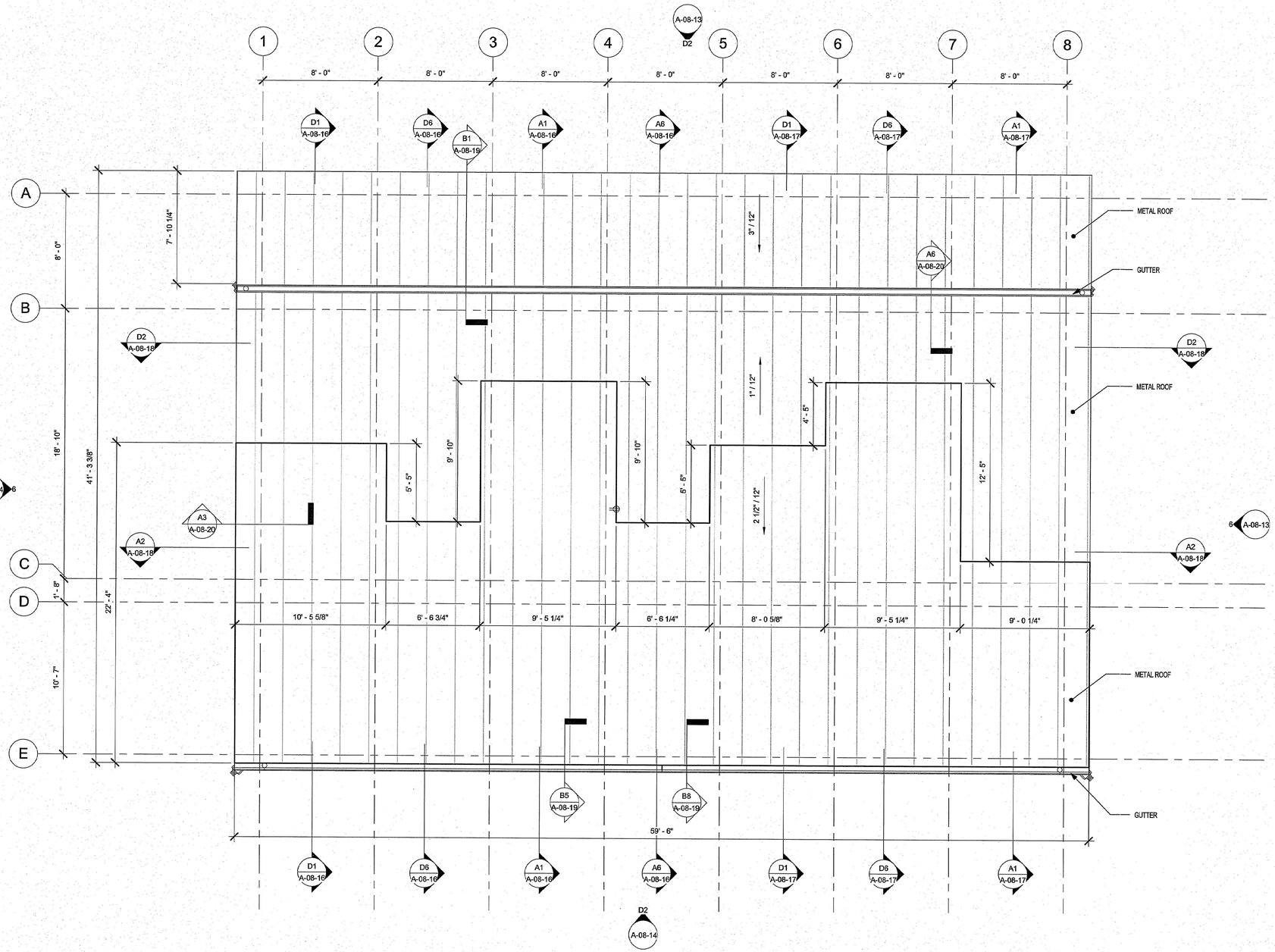

A2 HIGH ROOF PLAN

1/4" = 1'-0"

SCALE: 1/4" = 1'-0"
AT: 22"x 34"

0 4' 8' 16'

- FINAL DESIGN - FOR AGENCY APPROVAL ONLY

LICENSED ARCHITECT PAUL R. MAKOWICKI C-33907 6-30-17 RENEWAL DATE STATE OF CALIFORNIA

CALLISONRTKL A DESIGN CONSULTANCY OF ARCADIS

ARCADIS

NO.	DATE	DESCRIPTION	GM/SPEC	DWN	CHKD	SUPV	APVD BY
0	11/11/2015	FINAL DESIGN		KK	AS	RC	RAO

REVISIONS

APPROVED BY	
RAO	SO
	SUPV RC
	DSGN CALLISON
	DWN KK
	CHKD AS
	OK
	DATE 11/18/2015
	SCALES 1/4" = 1'-0"

TOPOCK GROUNDWATER REMEDIATION PROJECT
OPERATION BUILDING (BUILDING 8)

HIGH ROOF PLAN
GAS TRANSMISSION & DISTRIBUTION
PACIFIC GAS AND ELECTRIC COMPANY
SAN FRANCISCO, CALIFORNIA

MICROFILM	
BILL OF MATL	
DWG LIST	
SUPSDS	
SUPSD BY	
SHEET NO.	of SHEETS
A-08-08	REV 0

N1608

906-151658.09

COPYRIGHT © 2015 CALLISON

D:\1. LOCAL FILES\2. Mission Critical\Topock\Revit Files\TOPOCK-8_A_v2015 adam-2015-11-04.rvt 11/11/2015 2:05:51 PM

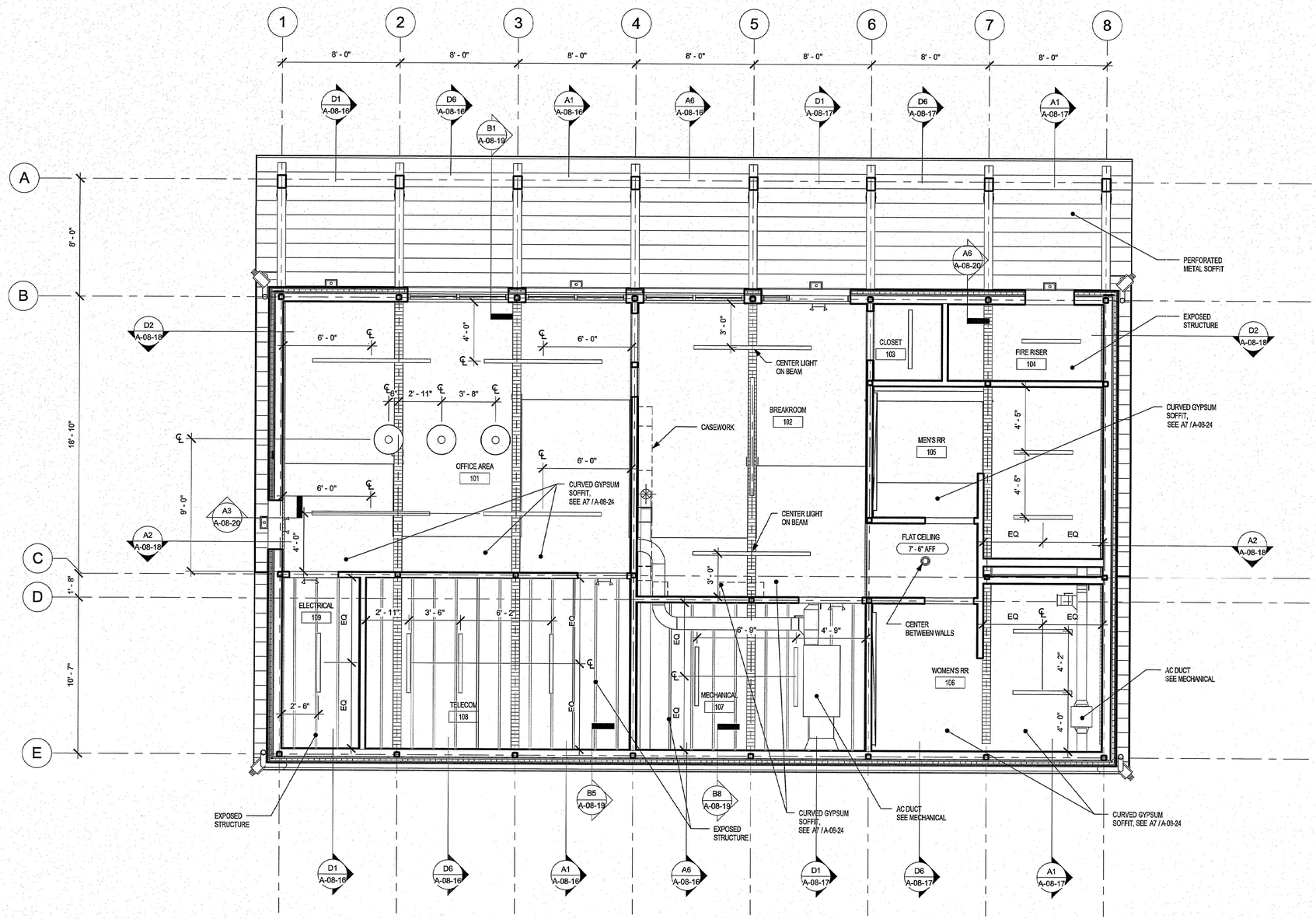

REFLECTED CEILING NOTES

1. FOR LIGHTING, SEE ELECTRICAL DRAWINGS.
2. FOR DIFFUSERS, SEE MECHANICAL DRAWINGS.

REFLECTED CEILING LEGEND

- PENDANT LIGHT FIXTURE
- WALL MOUNTED LIGHT FIXTURE
- PENDANT LIGHT FIXTURE
- RECESSED LIGHT FIXTURE
- EXTERIOR WALL MOUNTED LIGHT FIXTURE
- WALL MOUNTED EXIT SIGN AND LIGHT
- GLULAM BEAM, SEE STRUCTURAL
- SECURITY CAMERA

A2 LEVEL 1 REFLECTED CEILING PLAN
1/4" = 1'-0"

SCALE: 1/4" = 1'-0"
AT: 22"x 34"
0 4' 8' 16'

- FINAL DESIGN -
FOR AGENCY
APPROVAL ONLY

LICENSED ARCHITECT
PAUL R. MAKOWICKI
C-33907
6-30-17
RENEWAL DATE
STATE OF CALIFORNIA

CALLISONRTKL
A DESIGN CONSULTANCY OF ARCADIS

ARCADIS

NO.	DATE	DESCRIPTION	GM/SPEC	DWN	CHKD	SUPV	APVD BY
0	11/11/2015	FINAL DESIGN		KK	AS	RC	RAO

REVISIONS

APPROVED BY	
RAO	
SO	
SUPV	RC
DSGN	CALLISON
DWN	KK
CHKD	AS
OK	
DATE	11/18/2015
SCALES	As indicated

TOPOCK GROUNDWATER REMEDIATION PROJECT
OPERATION BUILDING (BUILDING 8)

LEVEL 1 REFLECTED CEILING PLAN
GAS TRANSMISSION & DISTRIBUTION
PACIFIC GAS AND ELECTRIC COMPANY
SAN FRANCISCO, CALIFORNIA

MICROFILM
BILL OF MATL
DWG LIST
SUPSDS
SUPSD BY
SHEET NO. of SHEETS
A-08-09 REV 0

COPYRIGHT © 2015 CALLISON

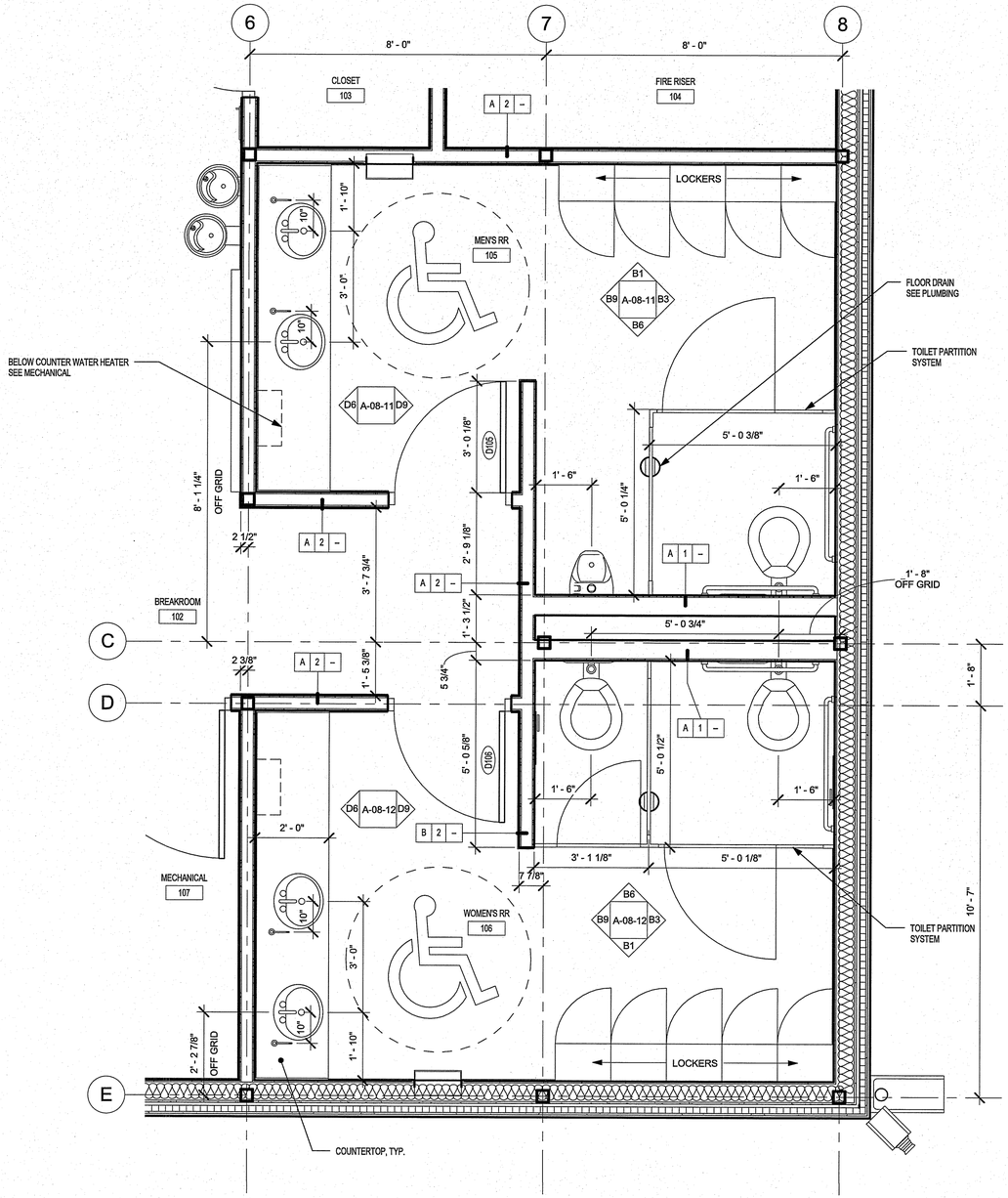

A4 RESTROOM ENLARGED FLOOR PLAN

1/2" = 1'-0"

SCALE: 1/2" = 1'-0"
AT: 22"x 34"

0 2' 4' 8'

- FINAL DESIGN - FOR AGENCY APPROVAL ONLY

LICENSED ARCHITECT
PAUL R. MAKOWSKI
C-33907
6-30-17
RENEWAL DATE
STATE OF CALIFORNIA

CALLISONRTKL
A DESIGN CONSULTANCY OF ARCADIS

ARCADIS

NO.	DATE	DESCRIPTION	GM/SPEC	DWN	CHKD	SUPV	APVD BY

REVISIONS

NO.	DATE	DESCRIPTION	GM/SPEC	DWN	CHKD	SUPV	APVD BY
0	11/11/2015	FINAL DESIGN		KK	AS	RC	RAO

REVISIONS

APPROVED BY	SO
	SUPV RC
RAO	DSGN CALLISON
	DWN KK
	CHKD AS
	OK
	DATE 11/18/2015
	SCALES 1/2" = 1'-0"

TOPOCK GROUNDWATER REMEDIATION PROJECT
OPERATION BUILDING (BUILDING 8)

RESTROOM ENLARGED FLOOR PLAN
GAS TRANSMISSION & DISTRIBUTION
PACIFIC GAS AND ELECTRIC COMPANY
SAN FRANCISCO, CALIFORNIA

MICROFILM	
BILL OF MATL	
DWG LIST	
SUPSDS	
SUPSD BY	
SHEET NO.	of SHEETS
A-08-10	REV 0

006-151658.00

COPYRIGHT © 2015 CALLISON

N1808

D:\1. LOCAL FILES\2. Mission Critical\Topock\Revit Files\TOPOCK-8_A_v2015 admin-2015-11-04.rvt
11/11/2015 2:05:02 PM

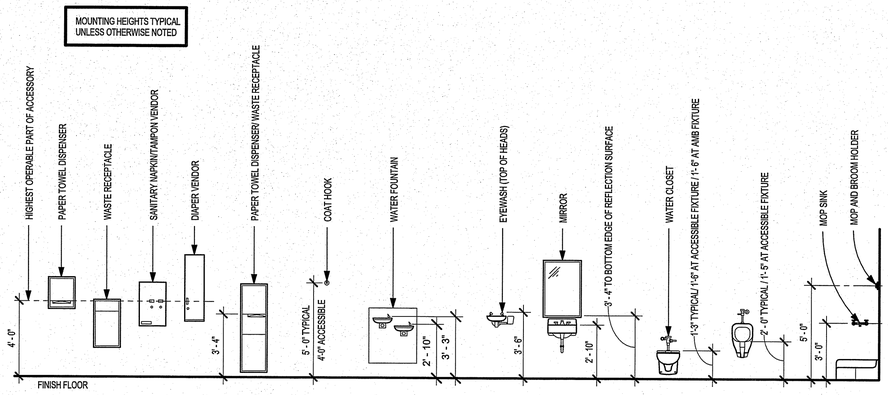

D1 ACCESSORY MOUNTING HEIGHTS FOR RESTROOM
1/4" = 1'-0"

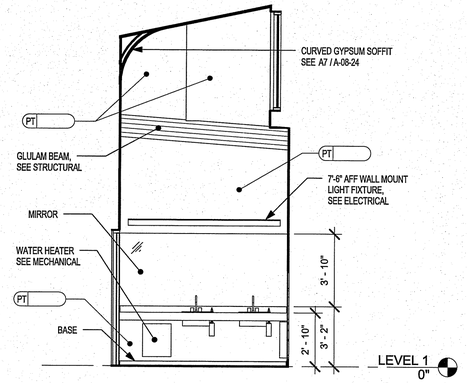

D6 MENS WEST MID INT ELEVATION
1/4" = 1'-0"

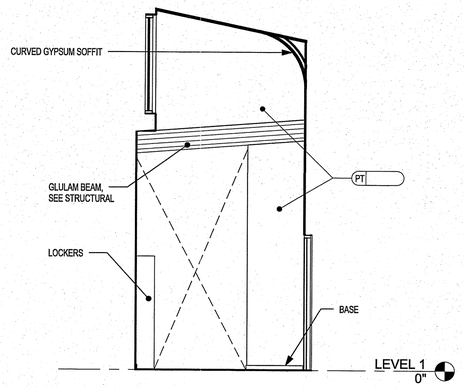

D9 MENS EAST MID INT ELEVATION
1/4" = 1'-0"

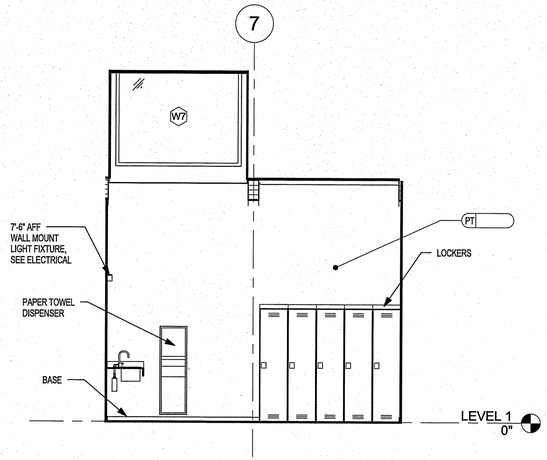

B1 MENS RESTROOM NORTH INT ELEVATION
1/4" = 1'-0"

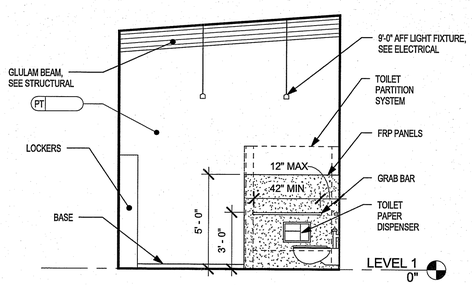

B3 MENS RESTROOM EAST INT ELEVATION
1/4" = 1'-0"

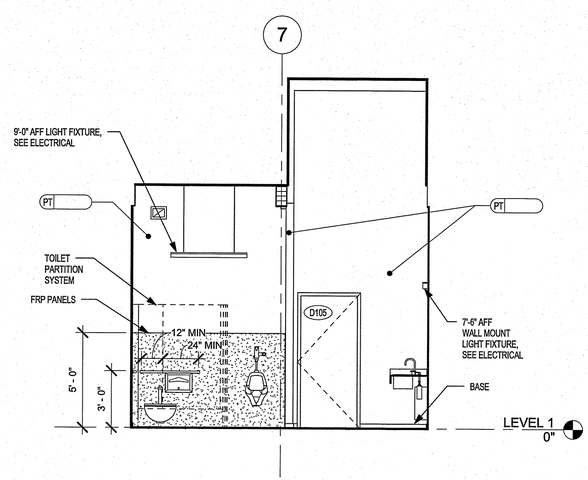

B6 MENS RESTROOM SOUTH INT ELEVATION
1/4" = 1'-0"

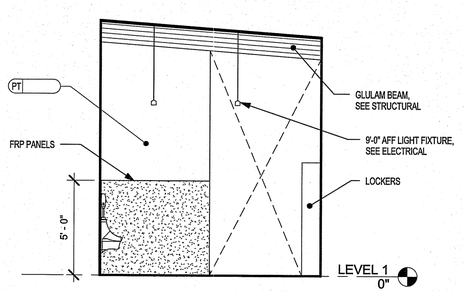

B9 MENS RESTROOM WEST INT ELEVATION
1/4" = 1'-0"

- FINAL DESIGN - FOR AGENCY APPROVAL ONLY

LICENSED ARCHITECT PAUL R. MAKOWICKI C-33907 6-30-17 RENEWAL DATE STATE OF CALIFORNIA

SCALE: 1/4" = 1'-0"
AT: 22"x 34"
0 4' 8' 16'

CALLISONRTKL A DESIGN CONSULTANCY OF ARCADIS
ARCADIS

NO.	DATE	DESCRIPTION	GM/SPEC	DWN	CHKD	SUPV	APVD BY
0	11/11/2015	FINAL DESIGN		KK	AS	RC	RAO

REVISIONS

APPROVED BY	
RAO	SO
	SUPV RC
	DSGN CALLISON
	DWN KK
	CHKD AS
	OK
	DATE 11/18/2015
	SCALES 1/4" = 1'-0"

TOPOCK GROUNDWATER REMEDIATION PROJECT
OPERATION BUILDING (BUILDING 8)

MENS RESTROOM INTERIOR ELEVATIONS
GAS TRANSMISSION & DISTRIBUTION
PACIFIC GAS AND ELECTRIC COMPANY
SAN FRANCISCO, CALIFORNIA

MICROFILM	
BILL OF MATL	
DWG LIST	
SUPSDS	
SUPSD BY	
SHEET NO. of SHEETS	
A-08-11	REV 0

006-151658.00

COPYRIGHT © 2015 CALLISON

N1808

D:\1: LOCAL FILES\2: Mission Critical\Topock\Revit Files\TOPOCK-E_A_v2015 adam.2015-11-04.rvt
11/11/2015 2:05:55 PM

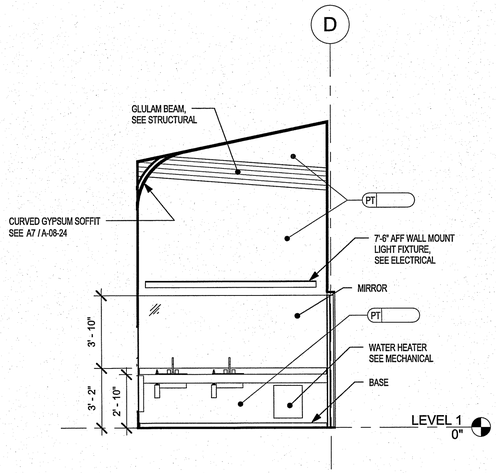

D6 WOMENS WEST INT ELEVATION
1/4" = 1'-0"

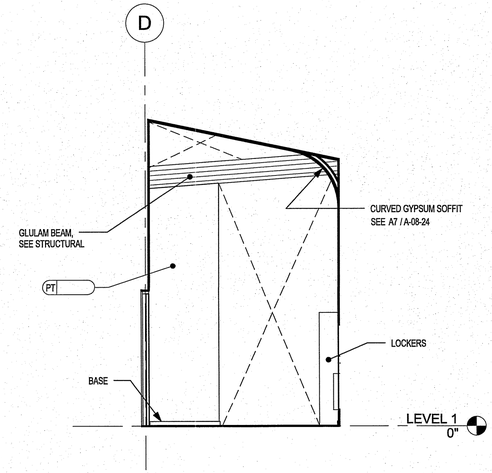

D9 WOMENS MID EAST INT ELEVATION
1/4" = 1'-0"

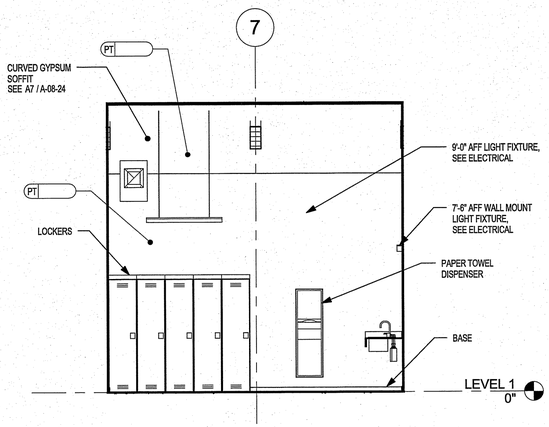

B1 WOMENS RESTROOM SOUTH INT ELEVATION
1/4" = 1'-0"

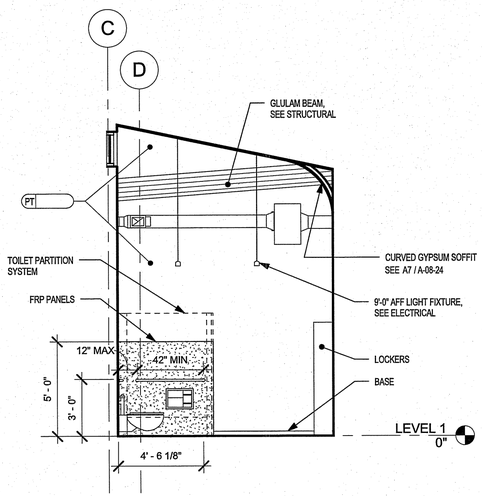

B3 WOMENS RESTROOM EAST INT ELEVATION
1/4" = 1'-0"

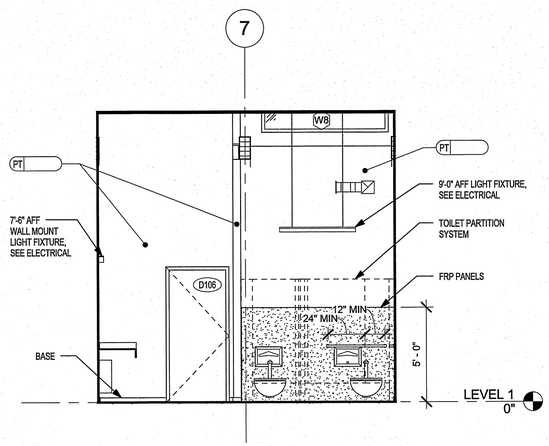

B6 WOMENS RESTROOM NORTH INT ELEVATION
1/4" = 1'-0"

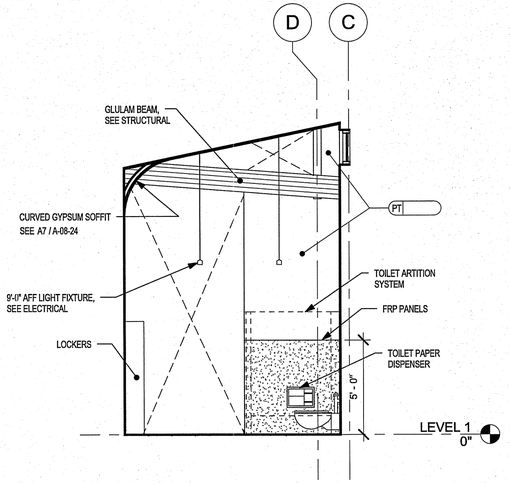

B9 WOMENS MID WEST INT ELEVATION
1/4" = 1'-0"

- FINAL DESIGN - FOR AGENCY APPROVAL ONLY

LICENSED ARCHITECT PAUL R. MAKOWICZ C-33907 6-30-17 RENEWAL DATE STATE OF CALIFORNIA

CALLISONRTKL A DESIGN CONSULTANCY OF ARCADIS

ARCADIS

NO.	DATE	DESCRIPTION	GM/SPEC	DWN	CHKD	SUPV	APVD BY
0	11/11/2015	FINAL DESIGN		KK	AS	RC	RAO

REVISIONS

APPROVED BY	
RAO	

SO	
SUPV	RC
DSGN	CALLISON
DWN	KK
CHKD	AS
OK	
DATE	11/18/2015
SCALES	1/4" = 1'-0"

TOPOCK GROUNDWATER REMEDIATION PROJECT
OPERATION BUILDING (BUILDING 8) WOMENS RESTROOM INTERIOR ELEVATION
GAS TRANSMISSION & DISTRIBUTION
PACIFIC GAS AND ELECTRIC COMPANY
SAN FRANCISCO, CALIFORNIA

MICROFILM	
BILL OF MATL	
DWG LIST	
SUPSDS	
SUPSD BY	
SHEET NO.	of SHEETS
A-08-12	REV 0

N1808

006-151658.00

COPYRIGHT © 2015 CALLISON

D:\1. LOCAL FILES\2. Mission Critical\Topock\Revit Files\TOPOCK-8_A_2015 adam-2015-11-04.rvt
11/11/2015 2:05:58 PM

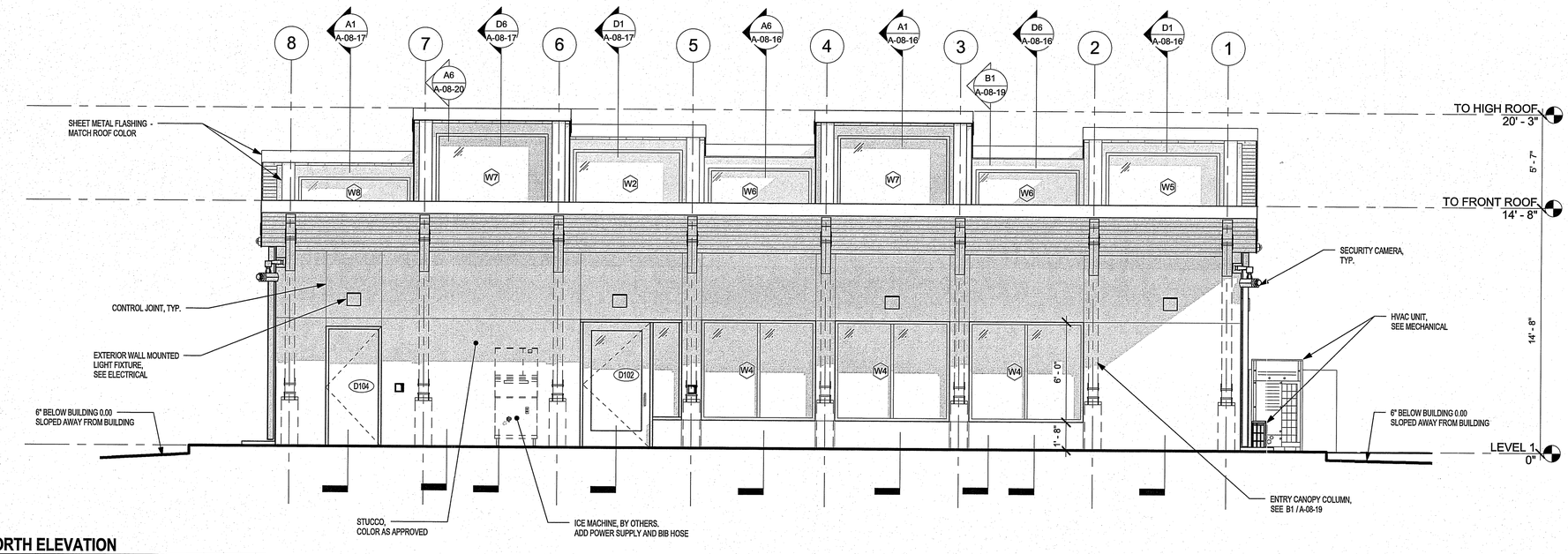

D2 NORTH ELEVATION
1/4" = 1'-0"

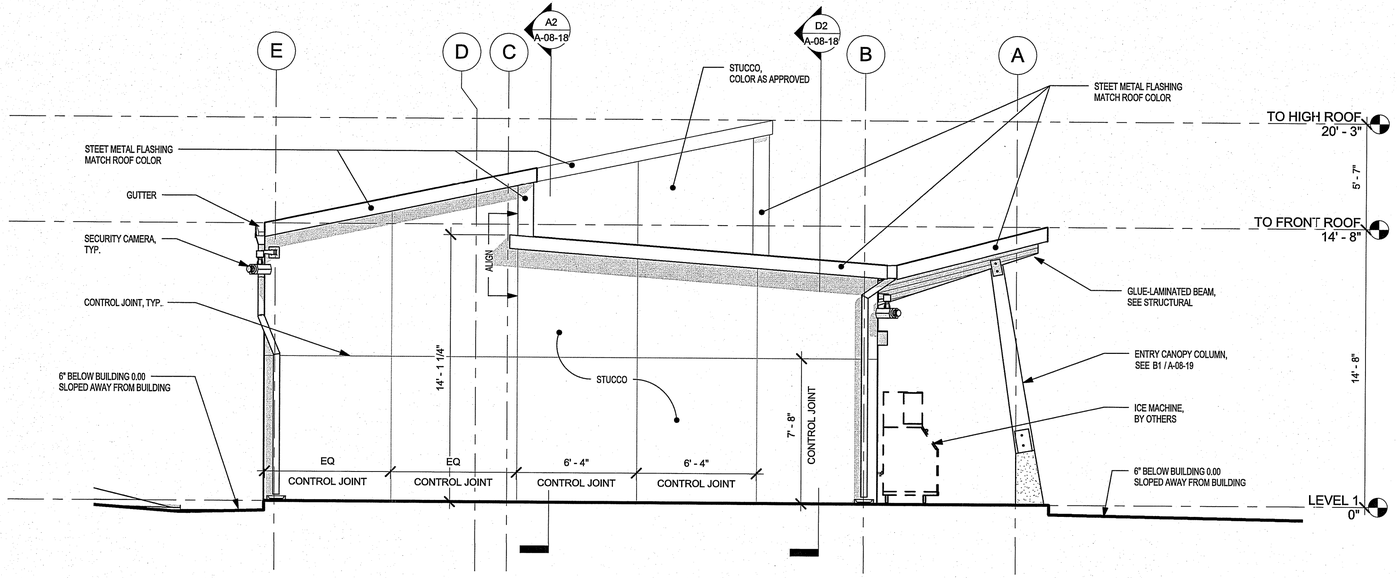

A2 EAST ELEVATION
1/4" = 1'-0"

NOTE:

FINISH MATERIAL SELECTION AS PER APPROVED

- FINAL DESIGN - FOR AGENCY APPROVAL ONLY

LICENSED ARCHITECT PAUL R. MAROWICZ C-33907 6-30-17 RENEWAL DATE STATE OF CALIFORNIA

SCALE: 1/4" = 1'-0"
AT: 22"x 34"
0 4' 8' 16'

CALLISONRTKL A DESIGN CONSULTANCY OF ARCADIS
ARCADIS

NO.	DATE	DESCRIPTION	GM/SPEC	DWN	CHKD	SUPV	APVD BY
0	11/11/2015	FINAL DESIGN		KK	AS	RC	RAO

REVISIONS

APPROVED BY		
RAO	SO	
	SUPV	RC
	DSGN	CALLISON
	DWN	KK
	CHKD	AS
	OK	
	DATE	11/18/2015
	SCALES	1/4" = 1'-0"

TOPOCK GROUNDWATER REMEDIATION PROJECT
OPERATION BUILDING (BUILDING 8)

EXTERIOR ELEVATIONS
GAS TRANSMISSION & DISTRIBUTION
PACIFIC GAS AND ELECTRIC COMPANY
SAN FRANCISCO, CALIFORNIA

MICROFILM	
BILL OF MATL	
DWG LIST	
SUPSDS	
SUPSD BY	
SHEET NO.	of SHEETS
A-08-13	REV 0

006-151658.00

COPYRIGHT © 2015 CALLISON

N1608

D:\1. LOCAL FILES\2. Mission Critical\Topock\Revit Files\TOPOCK-8_A_2015 adam-2015-11-04.rvt 11/11/2015 2:08:03 PM

NOTE:

FINISH MATERIAL SELECTION AS PER APPROVED

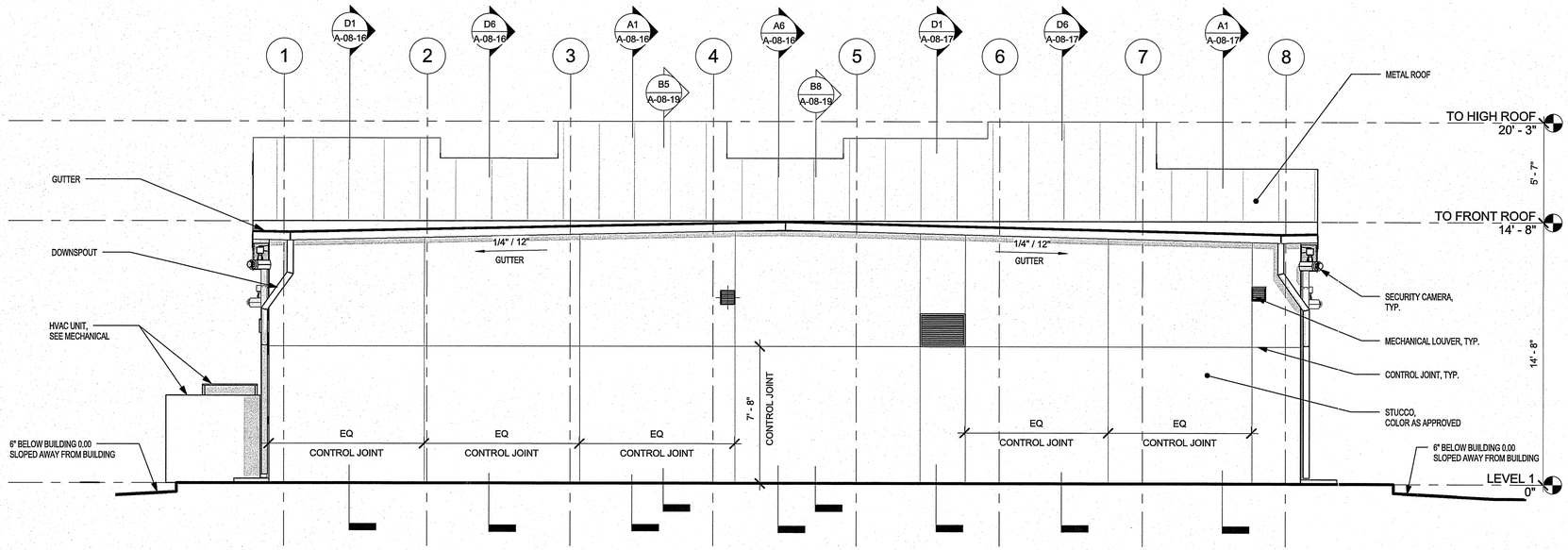

D2 SOUTH ELEVATION
1/4" = 1'-0"

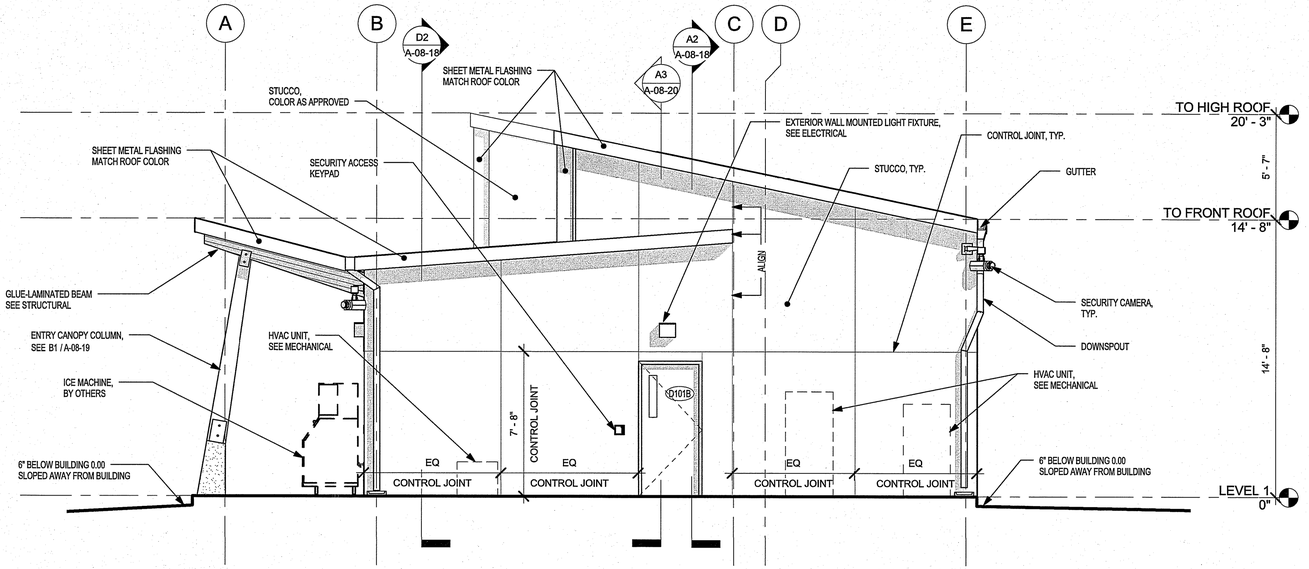

A2 WEST ELEVATION
1/4" = 1'-0"

SCALE: 1/4" = 1'-0"
AT: 22"x 34"
0 4' 8' 16'

- FINAL DESIGN - FOR AGENCY APPROVAL ONLY

LICENSED ARCHITECT PAUL R. MAKOWICKI C-33907 6-30-17 RENEWAL DATE STATE OF CALIFORNIA

CALLISONRTKL A DESIGN CONSULTANCY OF ARCADIS

ARCADIS

NO.	DATE	DESCRIPTION	GM/SPEC	DWN	CHKD	SUPV	APVD BY
0	11/11/2015	FINAL DESIGN		KK	AS	RC	RAO

REVISIONS

APPROVED BY	
RAO	

SO	
SUPV	RC
DSGN	CALLISON
DWN	KK
CHKD	AS
OK	
DATE	11/18/2015
SCALES	1/4" = 1'-0"

TOPOCK GROUNDWATER REMEDIATION PROJECT
OPERATION BUILDING (BUILDING 8)

EXTERIOR ELEVATIONS
GAS TRANSMISSION & DISTRIBUTION
PACIFIC GAS AND ELECTRIC COMPANY
SAN FRANCISCO, CALIFORNIA

MICROFILM	
BILL OF MATL	
DWG LIST	
SUPSDS	
SUPSD BY	
SHEET NO.	of SHEETS
A-08-14	REV 0

006-151658.00

COPYRIGHT © 2015 CALLISON

N1808

D:\1. LOCAL FILES\2. Mission Critical\Topock\Revit Files\TOPOCK-8_A_v2015 admin-2015-11-04.rvt
11/11/2015 2:06:08 PM

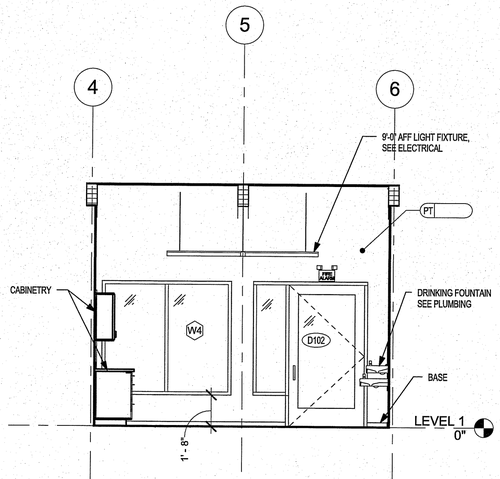

D1 BREAKROOM NORHT INTERIOR ELEVATION
1/4" = 1'-0"

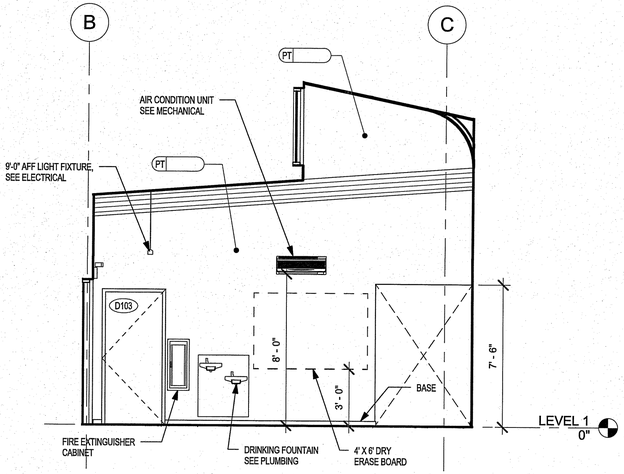

D3 BREAKROOM EAST INTERIOR ELEVATION
1/4" = 1'-0"

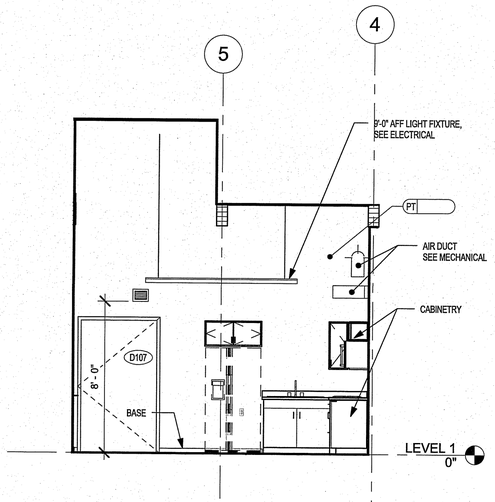

D6 BREAKROOM SOUTH INTERIOR ELEVATION
1/4" = 1'-0"

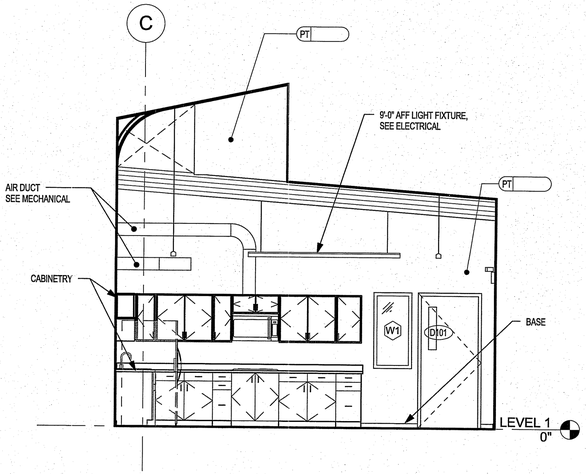

D8 BREAKROOM WEST INTERIOR ELEVATION
1/4" = 1'-0"

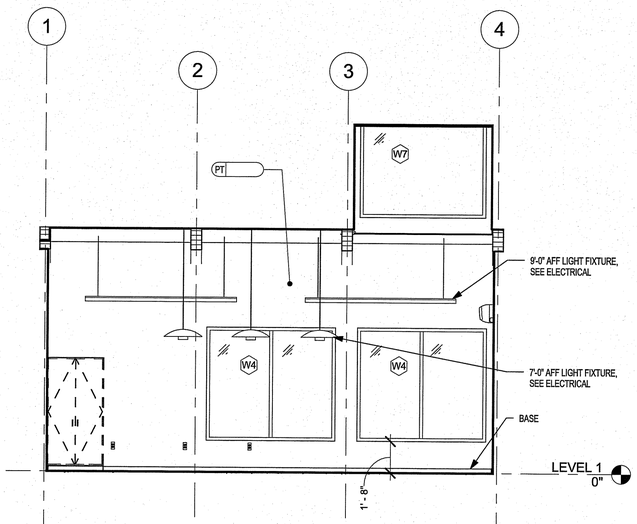

B1 OFFICE AREA NORTH INTERIOR ELEVATION
1/4" = 1'-0"

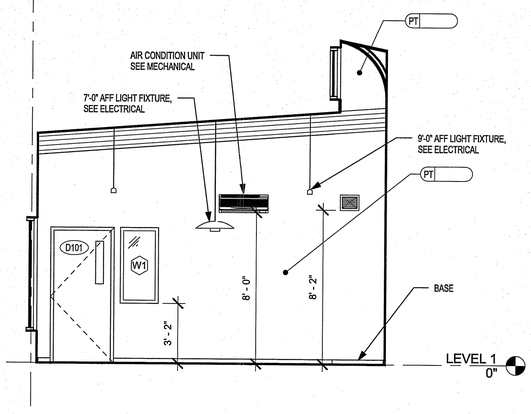

B3 OFFICE AREA EAST INTERIOR ELEVATION
1/4" = 1'-0"

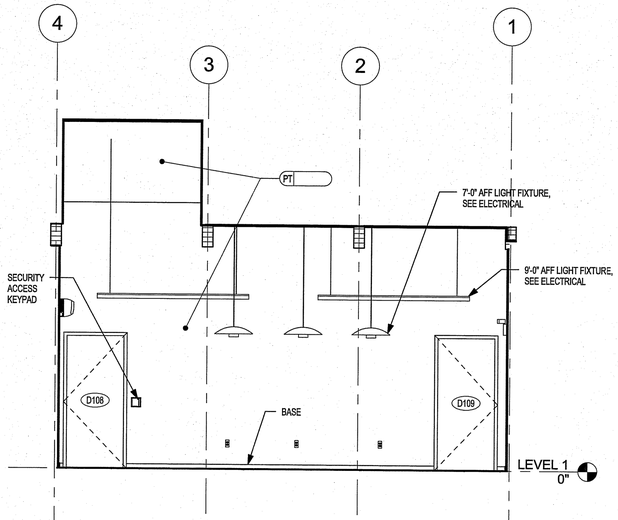

B6 OFFICE AREA SOUTH INTERIOR ELEVATION
1/4" = 1'-0"

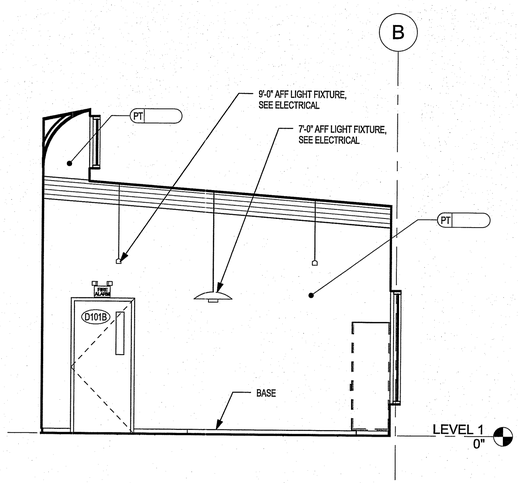

B8 OFFICE AREA WEST INTERIOR ELEVATION
1/4" = 1'-0"

- FINAL DESIGN -
FOR AGENCY
APPROVAL ONLY

LICENSED ARCHITECT
PAUL R. MAKOWICKI
C-33907
6-30-17
RENEWAL DATE
STATE OF CALIFORNIA

SCALE: 1/4" = 1'-0"
AT: 22"x 34"
0 4' 8' 16'

CALLISONRTKL
A DESIGN CONSULTANCY OF ARCADIS

ARCADIS

NO.	DATE	DESCRIPTION	GM/SPEC	DWN	CHKD	SUPV	APVD BY
0	11/11/2015	FINAL DESIGN		KK	AS	RC	RAO

REVISIONS

APPROVED BY		
RAO	SO	
	SUPV	RC
	DSGN	CALLISON
	DWN	KK
	CHKD	AS
	OK	
	DATE	11/18/2015
	SCALES	1/4" = 1'-0"

TOPOCK GROUNDWATER REMEDIATION PROJECT
OPERATION BUILDING (BUILDING 8)

INTERIOR ELEVATIONS
GAS TRANSMISSION & DISTRIBUTION
PACIFIC GAS AND ELECTRIC COMPANY
SAN FRANCISCO, CALIFORNIA

MICROFILM
BILL OF MATL
DWG LIST
SUPSDS
SUPSD BY
SHEET NO. of SHEETS
A-08-15
REV 0

006-151658.00

COPYRIGHT © 2015 CALLISON

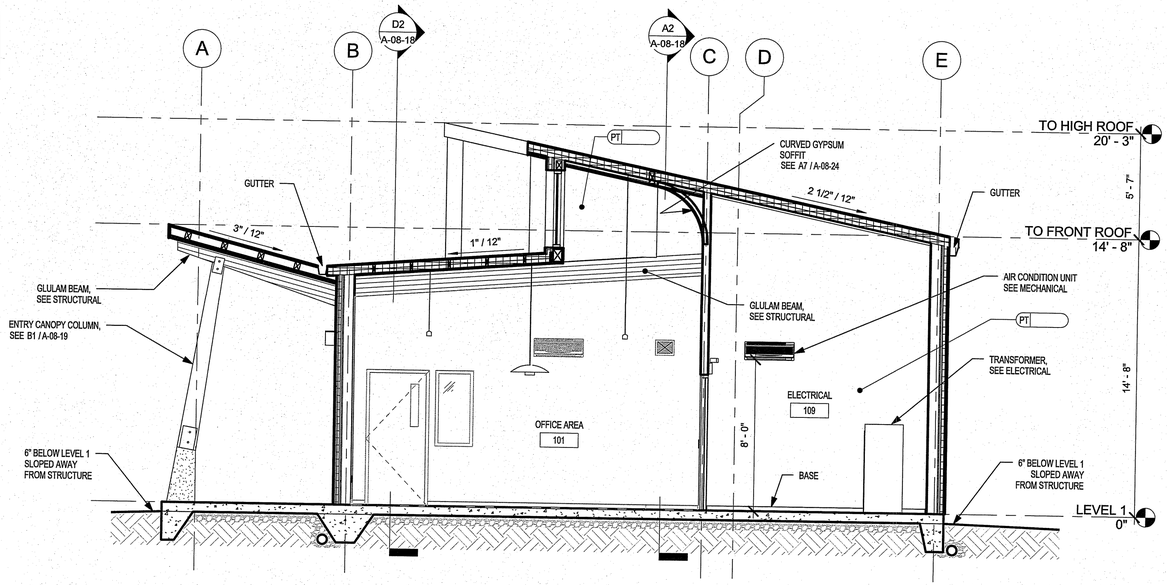

D1 BUILDING SECTION 1
1/4" = 1'-0"

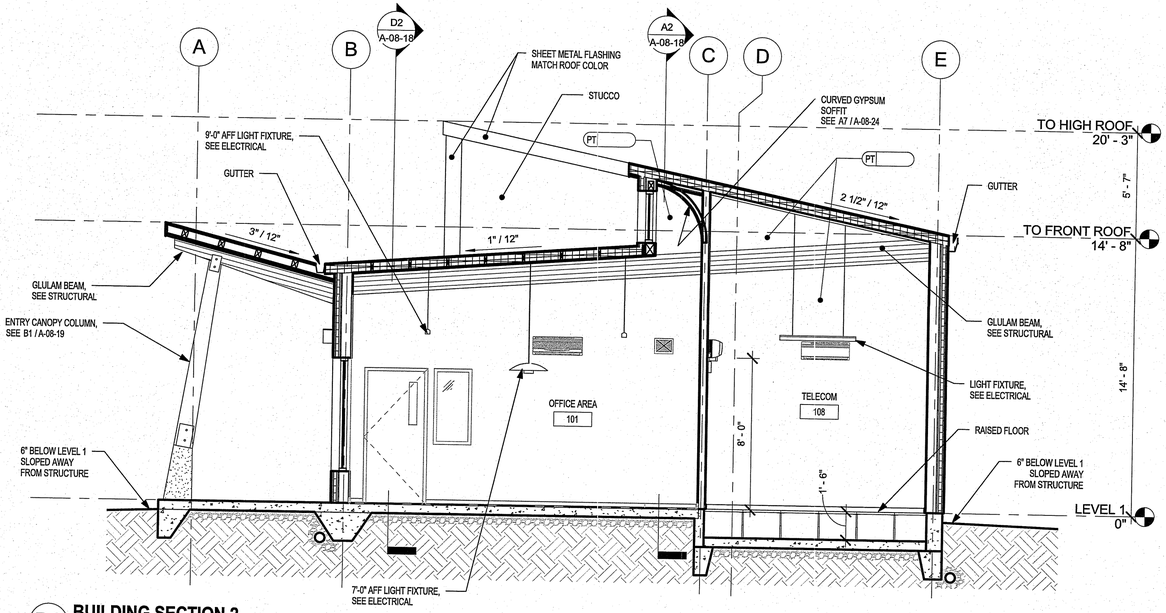

D6 BUILDING SECTION 2
1/4" = 1'-0"

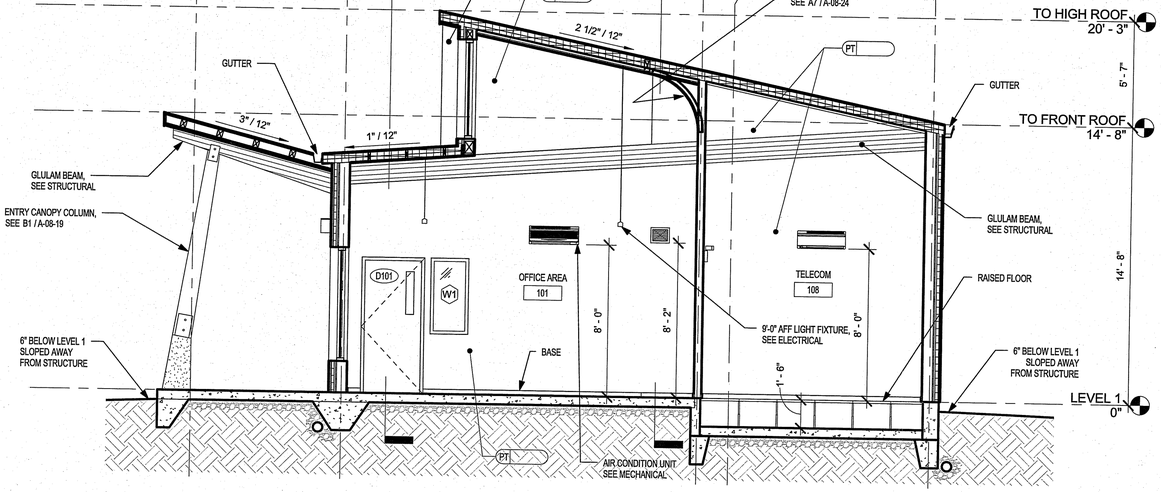

A1 BUILDING SECTION 3
1/4" = 1'-0"

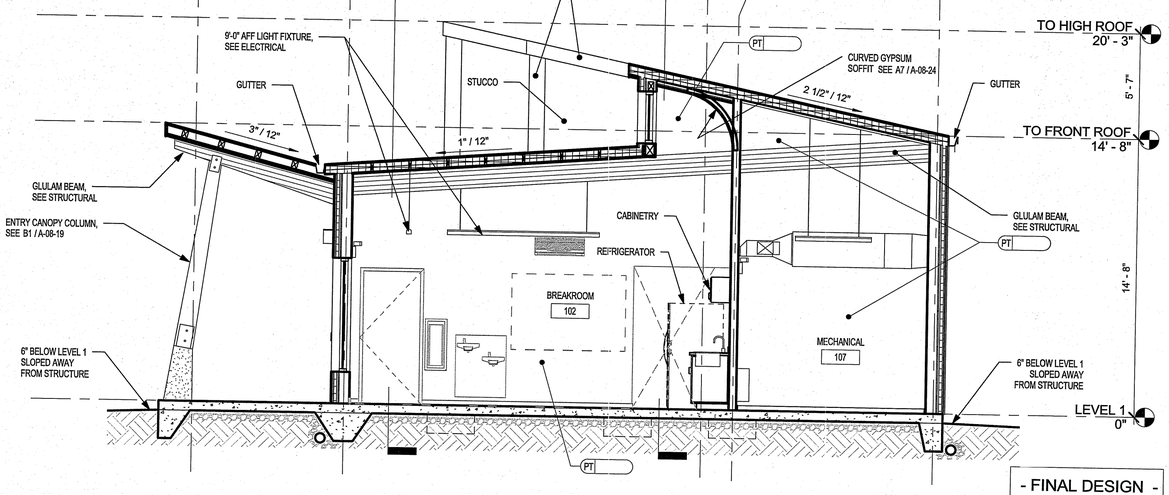

A6 BUILDING SECTION 4
1/4" = 1'-0"

- FINAL DESIGN -
FOR AGENCY
APPROVAL ONLY

LICENSED ARCHITECT
PAUL R. MAKOWICKI
C-33907
6-30-17
RENEWAL
DATE
STATE OF CALIFORNIA

SCALE: 1/4" = 1'-0"
AT: 22"x 34"
0 4' 8' 16'

CALLISONRTKL
A DESIGN CONSULTANCY OF ARCADIS
ARCADIS

NO.	DATE	DESCRIPTION	GM/SPEC	DWN	CHKD	SUPV	APVD BY
0	11/11/2015	FINAL DESIGN		KK	AS	RC	RAO

REVISIONS

APPROVED BY	
RAO	
SUPV	RC
DSGN	CALLISON
DWN	KK
CHKD	AS
OK	
DATE	11/18/2015
SCALES	1/4" = 1'-0"

TOPOCK GROUNDWATER REMEDIATION PROJECT
OPERATION BUILDING (BUILDING 8)

BUILDING SECTIONS
GAS TRANSMISSION & DISTRIBUTION
PACIFIC GAS AND ELECTRIC COMPANY
SAN FRANCISCO, CALIFORNIA

MICROFILM	
BILL OF MATL	
DWG LIST	
SUPSDS	
SUPSD BY	
SHEET NO.	of SHEETS
A-08-16	REV 0

006-151658.00

COPYRIGHT © 2015 CALLISON

N1808

D:\1. LOCAL FILES\2. Mission Critical\Topock\Revit Files\TOPOCK-8_A_v2015 adam-2015-11-04.rvt
11/11/2015 2:06:13 PM

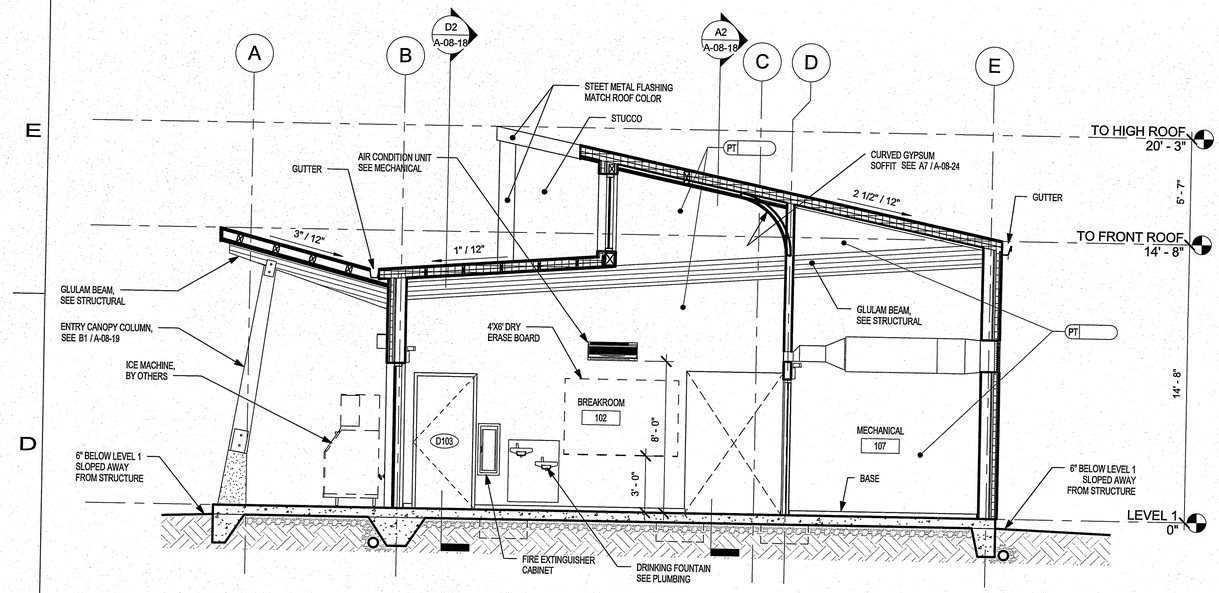

D1 BUILDING SECTION 5
1/4" = 1'-0"

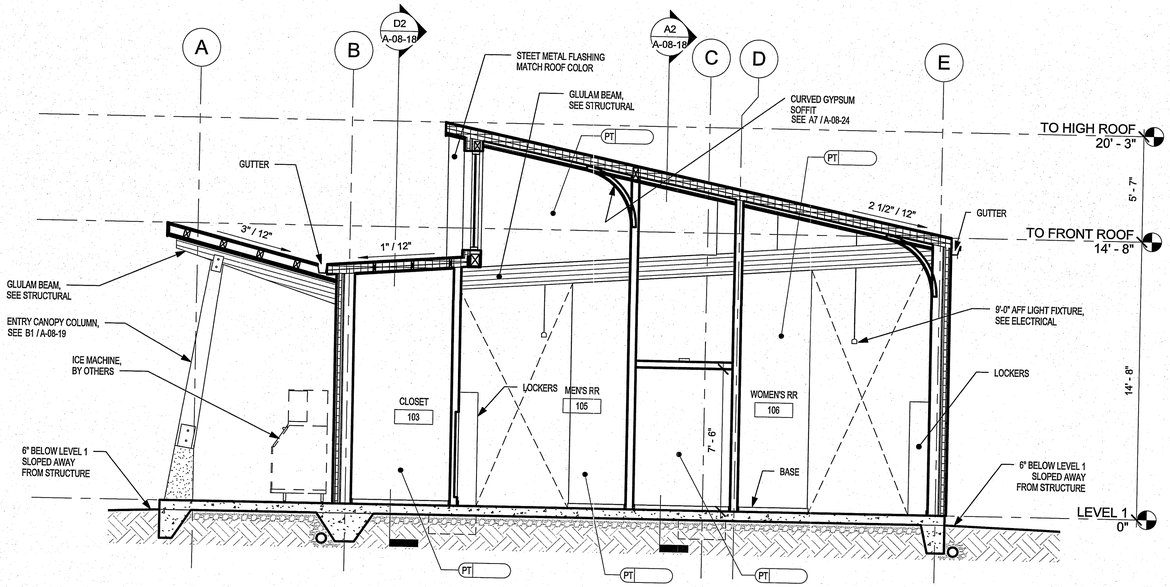

D6 BUILDING SECTION 6
1/4" = 1'-0"

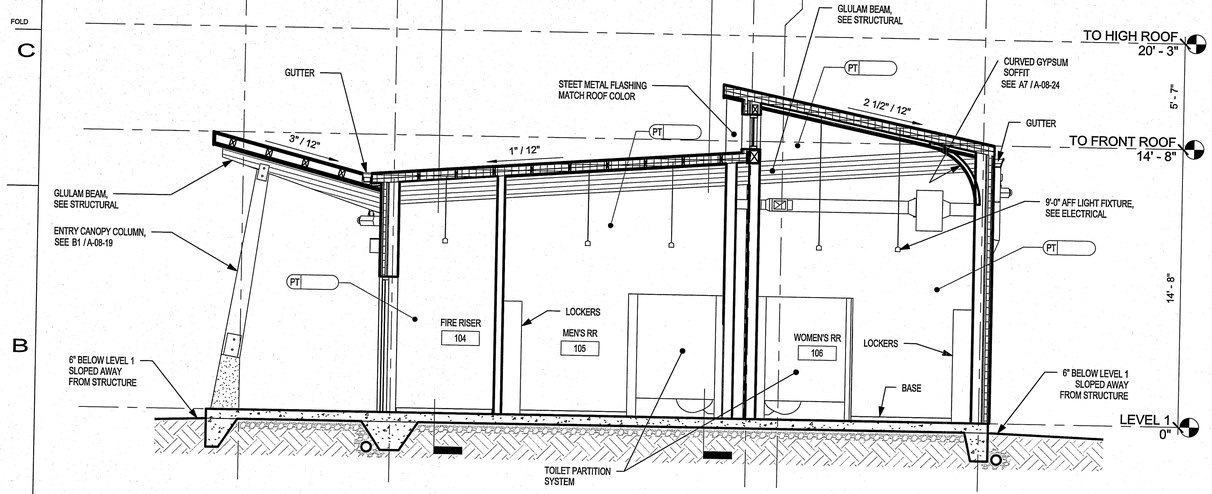

A1 BUILDING SECTION 7
1/4" = 1'-0"

- FINAL DESIGN -
FOR AGENCY
APPROVAL ONLY

LICENSED ARCHITECT
PAUL R. MAROWICZ
C-33907
6-30-17
RENEWAL
DATE
STATE OF CALIFORNIA

SCALE: 1/4" = 1'-0"
AT: 22"x 34"
0 4' 8' 16'

CALLISONRTKL
A DESIGN CONSULTANCY OF ARCADIS
ARCADIS

NO.	DATE	DESCRIPTION	GM/SPEC	DWN	CHKD	SUPV	APV'D BY
0	11/11/2015	FINAL DESIGN	KK	AS	RC	RAO	

REVISIONS

APPROVED BY	
RAO	SO
	SUPV RC
	DSGN CALLISON
	DWN KK
	CHKD AS
	OK
	DATE 11/18/2015
	SCALES 1/4" = 1'-0"

TOPOCK GROUNDWATER REMEDIATION PROJECT
OPERATION BUILDING (BUILDING 8)

BUILDING SECTIONS
GAS TRANSMISSION & DISTRIBUTION
PACIFIC GAS AND ELECTRIC COMPANY
SAN FRANCISCO, CALIFORNIA

MICROFILM	
BILL OF MATL	
DWG LIST	
SUPSDS	
SUPSD BY	
SHEET NO.	of SHEETS
A-08-17	REV 0

N1808
006-151658.00
COPYRIGHT © 2015 CALLISON
D:\1: LOCAL FILES\2. Mission Critical\Topock\Revit Files\TOPOCK-B_A_V2015 adam-2015-11-04.rvt
11/11/2015 2:08:14 PM

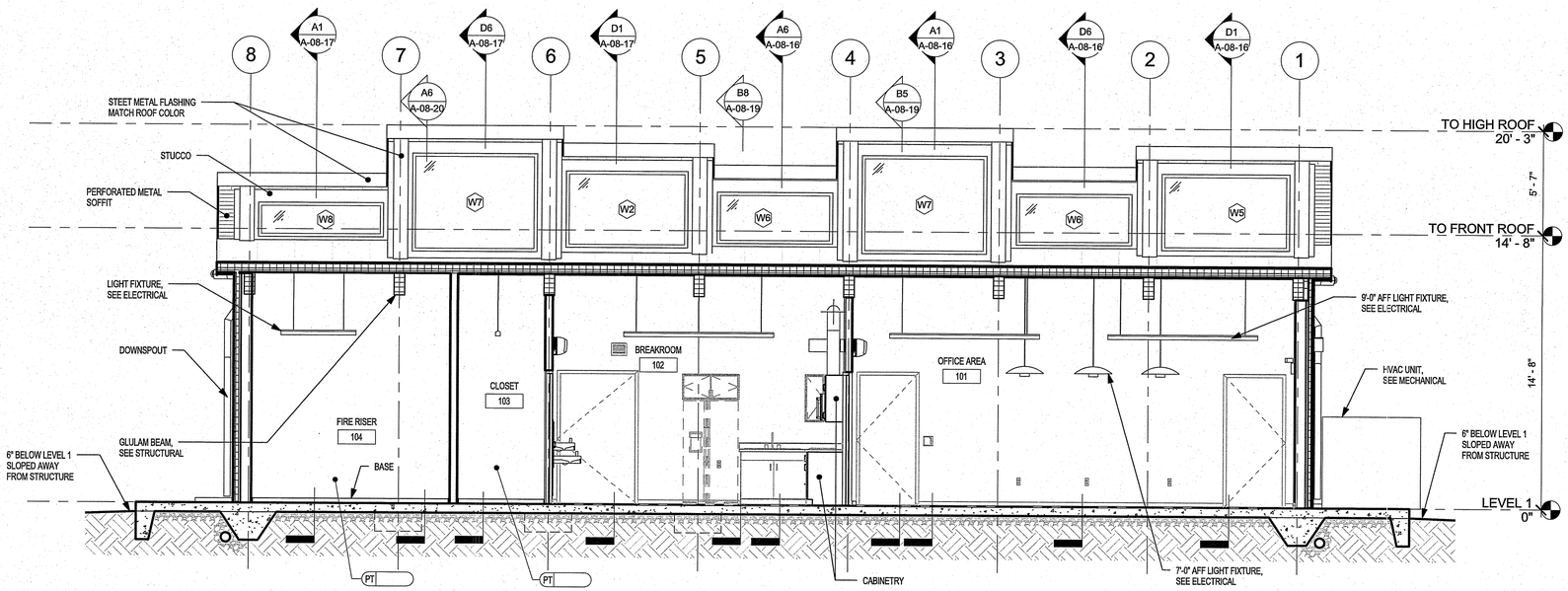

D2 BUILDING SECTION A
1/4" = 1'-0"

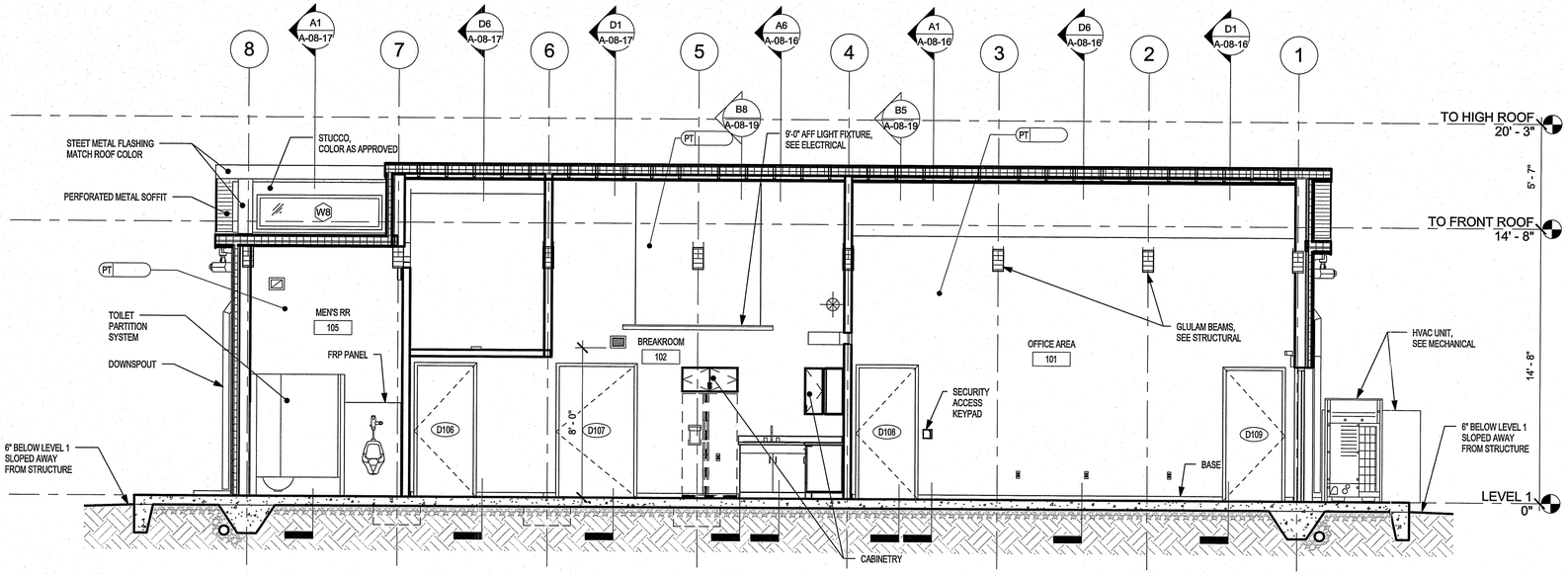

A2 BUILDING SECTION B
1/4" = 1'-0"

- FINAL DESIGN -
FOR AGENCY APPROVAL ONLY

LICENSED ARCHITECT PAUL R. MAKOWICKI C-33907 6-30-17 RENEWAL DATE STATE OF CALIFORNIA

CALLISON RTKL
A DESIGN CONSULTANCY OF ARCADIS

ARCADIS

NO.	DATE	DESCRIPTION	GM/SPEC	DWN	CHKD	SUPV	APVD BY
0	11/11/2015	FINAL DESIGN		KK	AS	RC	RAO

REVISIONS

APPROVED BY		
RAO	SO	
	SUPV	RC
	DSGN	CALLISON
	DWN	KK
	CHKD	AS
	OK	
	DATE	11/18/2015
	SCALES	1/4" = 1'-0"

TOPOCK GROUNDWATER REMEDIATION PROJECT
OPERATION BUILDING (BUILDING 8)

BUILDING SECTIONS
GAS TRANSMISSION & DISTRIBUTION
PACIFIC GAS AND ELECTRIC COMPANY
SAN FRANCISCO, CALIFORNIA

MICROFILM
BILL OF MATL
DWG LIST
SUPSDS
SUPSD BY
SHEET NO. of SHEETS
A-08-18 REV 0

006-151658.00

COPYRIGHT © 2015 CALLISON

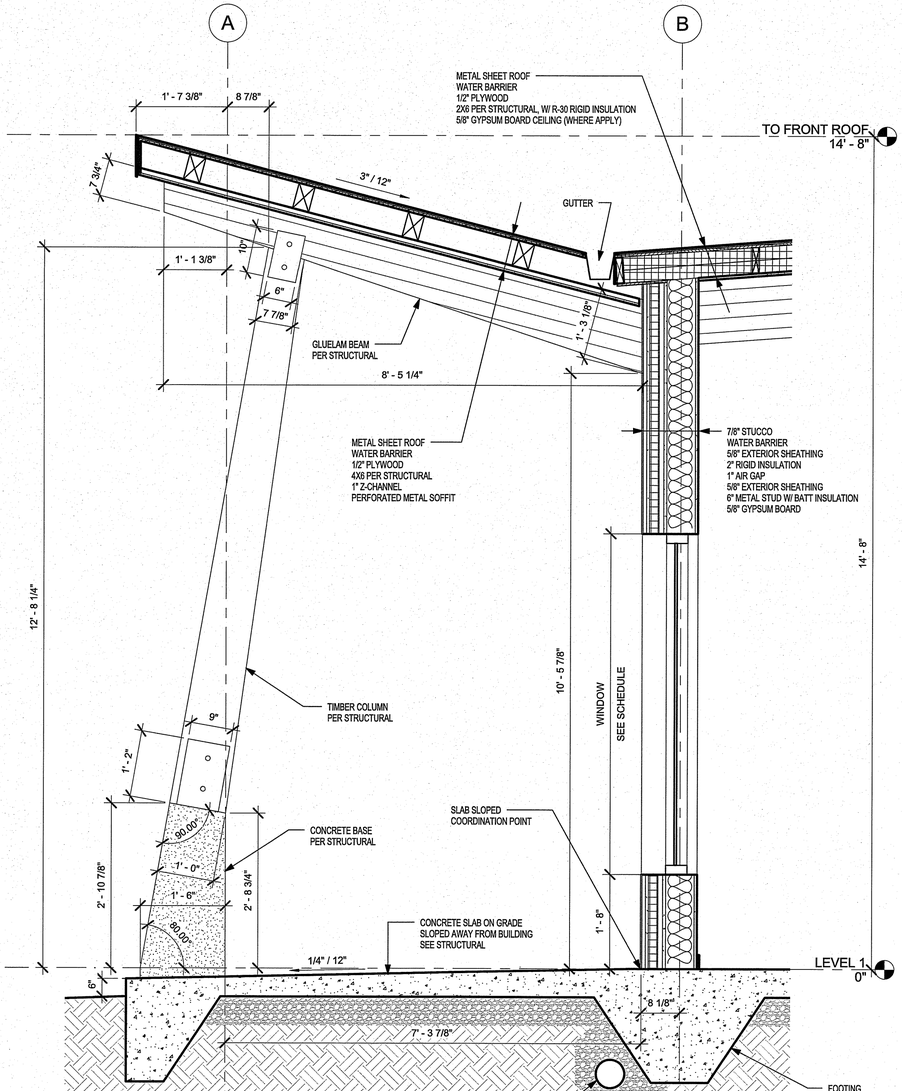

B1 ENTRY CANOPY AND NORTH WALL
3/4" = 1'-0"

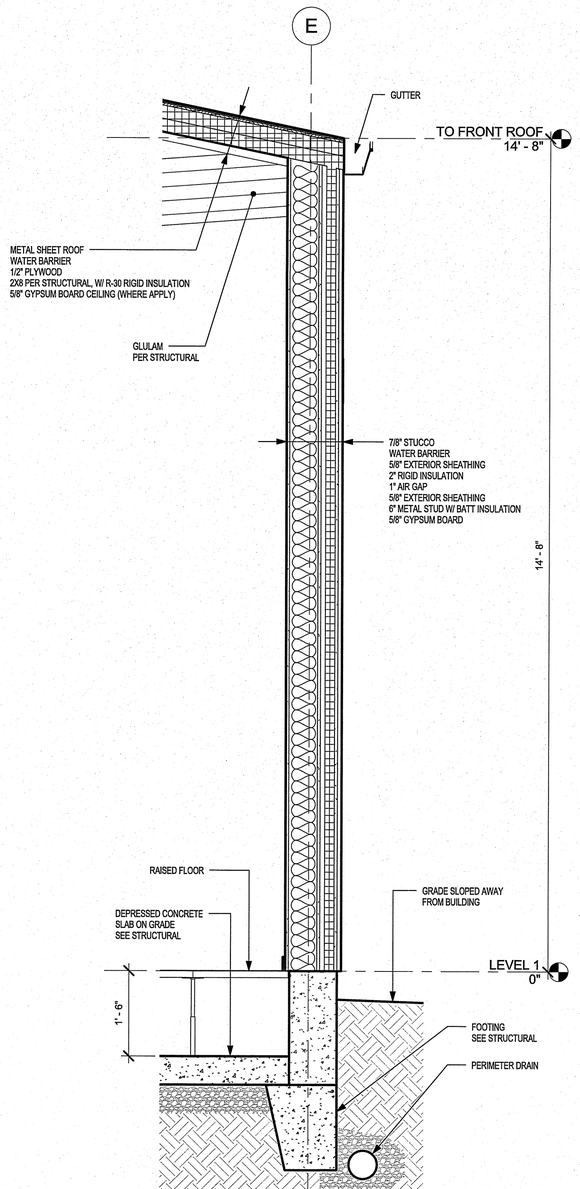

B5 SOUTH WALL AT TELECOM ROOM
3/4" = 1'-0"

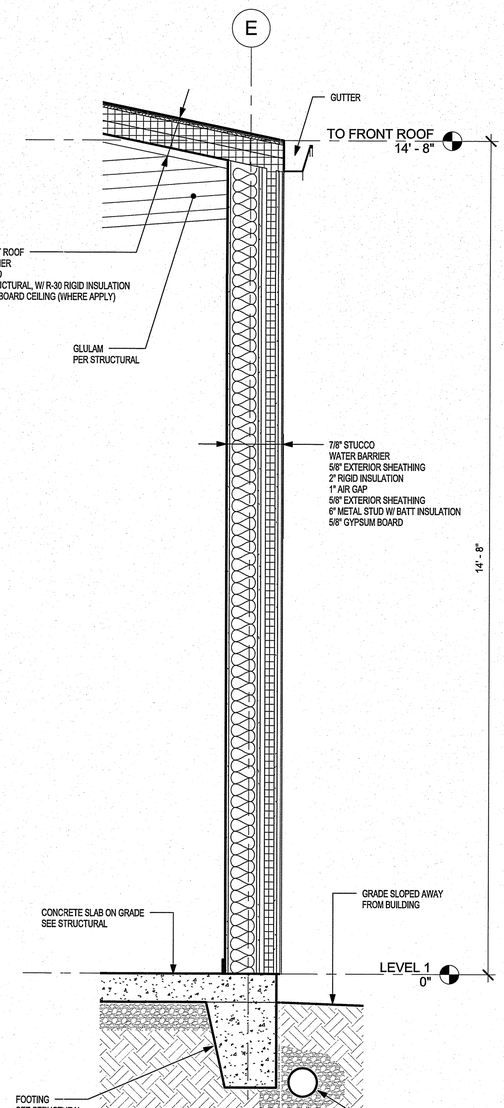

B8 SOUTH WALL
3/4" = 1'-0"

- FINAL DESIGN -
FOR AGENCY
APPROVAL ONLY

LICENSED ARCHITECT
RAOUL R. MAKOWIECKI
C-33907
6-30-17
RENEWAL DATE
STATE OF CALIFORNIA

SCALE: 1/2" = 1'-0"
AT: 22"x 34"
0 2' 4' 8'

CALLISONRTKL
A DESIGN CONSULTANCY OF ARCADIS
ARCADIS

NO.	DATE	DESCRIPTION	GM/SPEC	DWN	CHKD	SUPV	APVD BY
0	11/11/2015	FINAL DESIGN		KK	AS	RC	RAO

REVISIONS

APPROVED BY	
RAO	

SO	
SUPV	RC
DSGN	CALLISON
DWN	KK
CHKD	AS
OK	
DATE	11/18/2015
SCALES	3/4" = 1'-0"

TOPOCK GROUNDWATER REMEDIATION PROJECT
OPERATION BUILDING (BUILDING 8)

WALL SECTIONS
GAS TRANSMISSION & DISTRIBUTION
PACIFIC GAS AND ELECTRIC COMPANY
SAN FRANCISCO, CALIFORNIA

MICROFILM	
BILL OF MATL	
DWG LIST	
SUPSDS	
SUPSD BY	
SHEET NO.	of SHEETS
A-08-19	REV 0

N1808

006-151658.00

COPYRIGHT © 2015 CALLISON

D31: LOCAL FILES\2. Master Cirlcuit\Topock\Revit Files\TOPOCK-8_A_c2015.stdem 2015-11-04.rvt
11/11/2015 3:26:16 PM

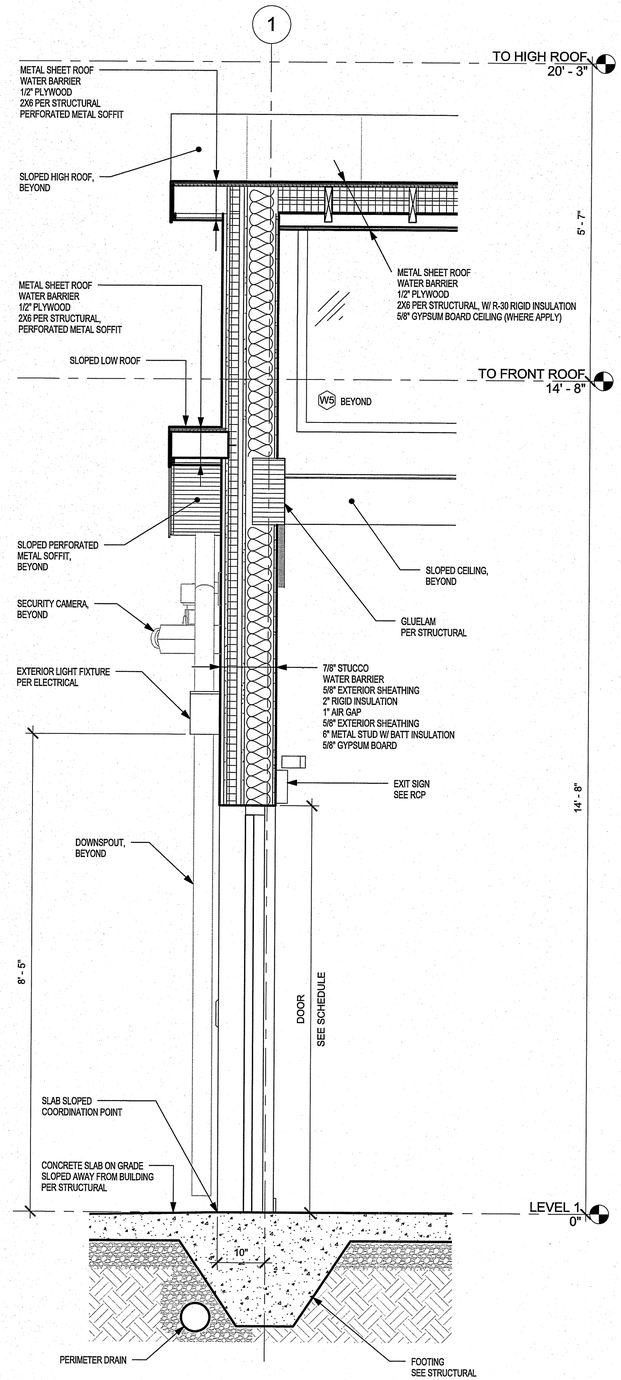

A3 WEST WALL AT A DOOR
3/4" = 1'-0"

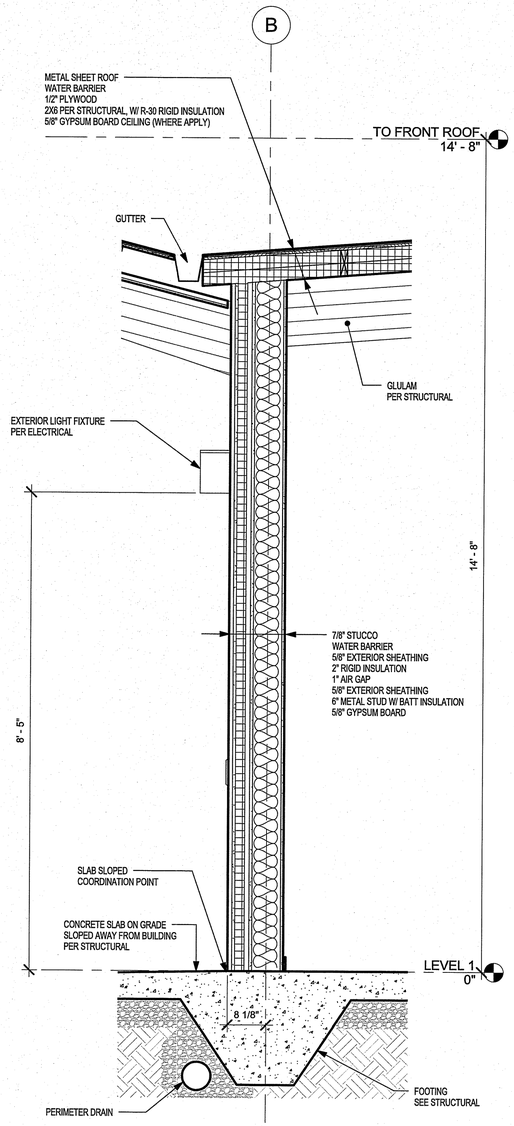

A6 NORTH WALL
3/4" = 1'-0"

SCALE: 1/2" = 1'-0"
AT: 22"x 34"
0 2' 4' 8'

- FINAL DESIGN -
FOR AGENCY
APPROVAL ONLY

LICENSED ARCHITECT
PAUL R. MAKOWSKI
C-33907
6-30-17
RENEWAL DATE
STATE OF CALIFORNIA

CALLISONRTKL
A DESIGN CONSULTANCY OF ARCADIS
ARCADIS

NO.	DATE	DESCRIPTION	GM/SPEC	DWN	CHKD	SUPV	APVD BY
0	11/11/2015	FINAL DESIGN		KK	AS	RC	RAO

REVISIONS

APPROVED BY	
RAO	SO
	SUPV RC
	DSGN CALLISON
	DWN KK
	CHKD AS
	OK
	DATE 11/18/2015
	SCALES 3/4" = 1'-0"

TOPOCK GROUNDWATER REMEDIATION PROJECT
OPERATION BUILDING (BUILDING 8)

WALL SECTIONS
GAS TRANSMISSION & DISTRIBUTION
PACIFIC GAS AND ELECTRIC COMPANY
SAN FRANCISCO, CALIFORNIA

MICROFILM	
BILL OF MATL	
DWG LIST	
SUPSDS	
SUPSD BY	
SHEET NO.	of SHEETS
A-08-20	REV 0

006-151658.00

COPYRIGHT © 2015 CALLISON

N1808

D:\1. LOCAL FILES\2. Mission Critical\Topock\Revit Files\TOPOCK-A_A_v2018 adam-2015-11-04.rvt
11/11/2015 3:06:19 PM

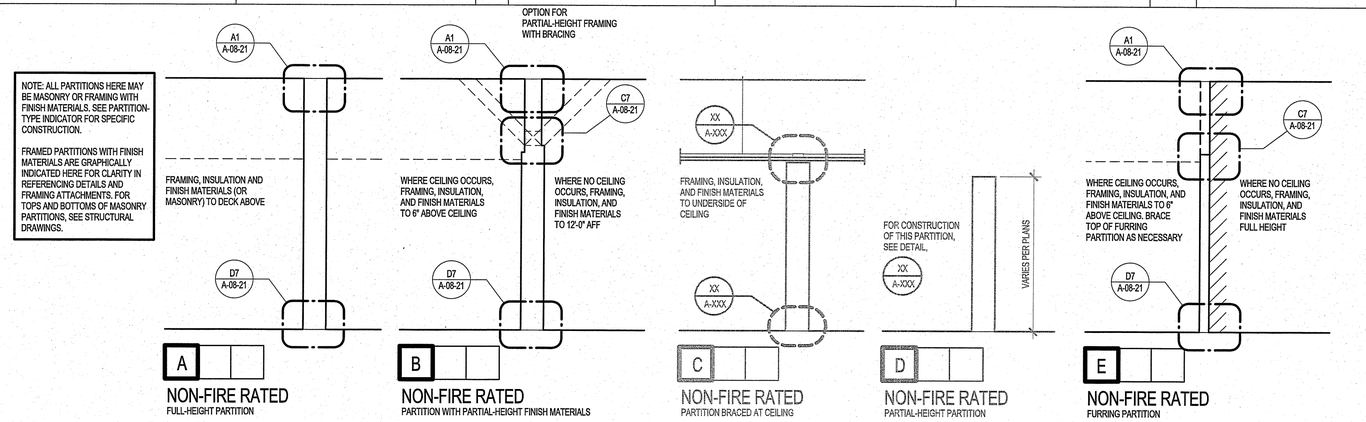

D1 PARTITIONAL CONFIGURATIONS

3/4" = 1'-0"

C1010FP-03

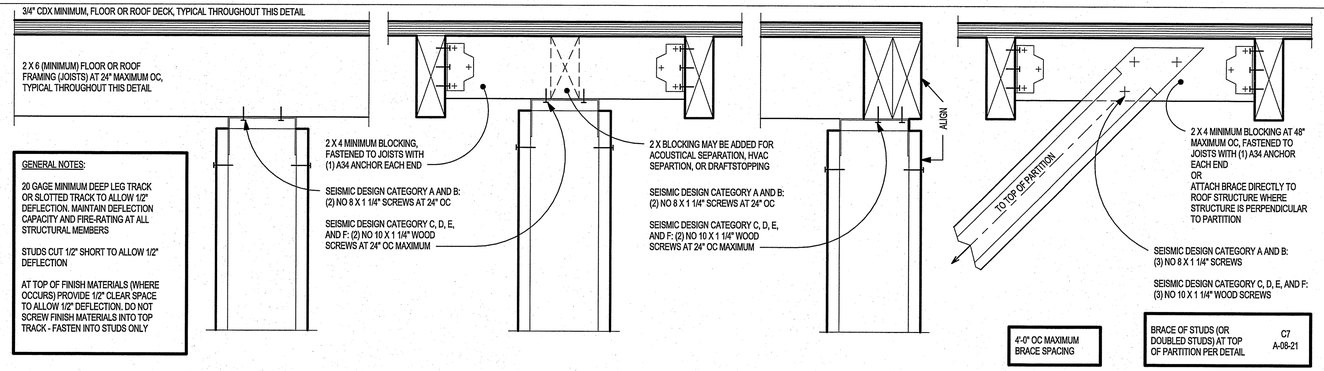

A1 INTERSECTOIN OF NON-RATED METAL-STUD PARTITIONS WITH SOLID-LUMBER STRUCTURE AND PLYWOOD DECK ABOVE

3" = 1'-0"

C1010FP-26

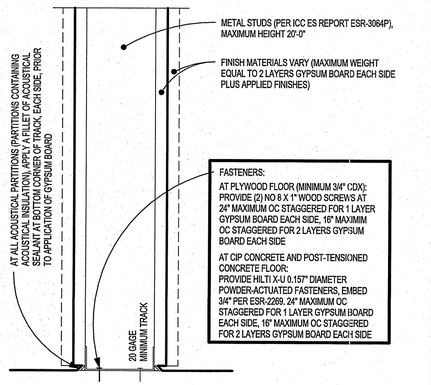

D7 PTN-TO-FLR CONNECTION FOR SEISMIC SITUATIONS

3" = 1'-0"

C1010FP-08

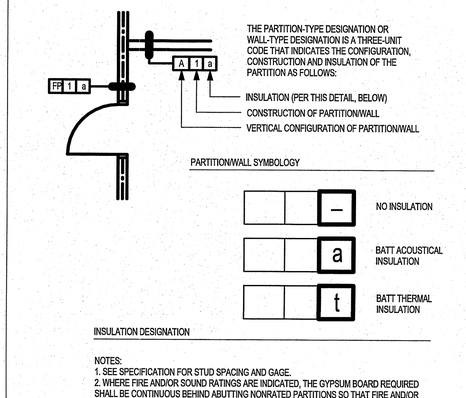

D9 PARTITIONAL LEGEND

12" = 1'-0"

C1010FP-01

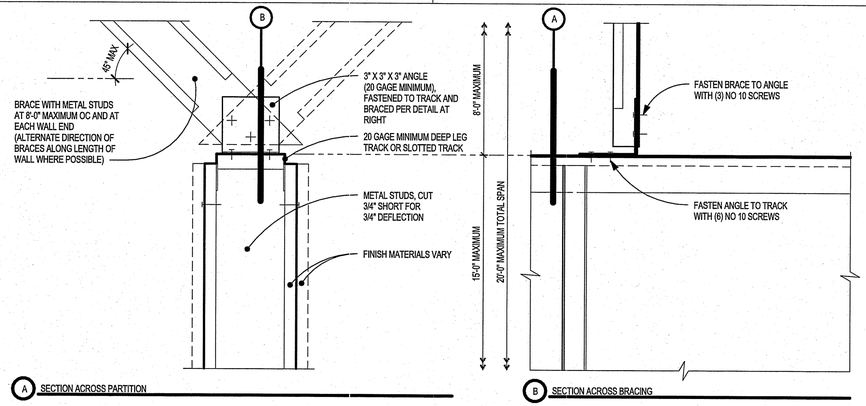

C7 TOP OF PARTITION WHERE BRACED TO STRUCTURE ABOVE - SEISMIC DESIGN CATAGORY A AND B

3" = 1'-0"

C1010FP-52

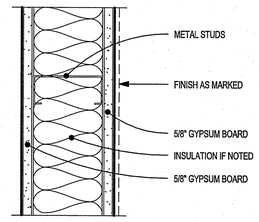

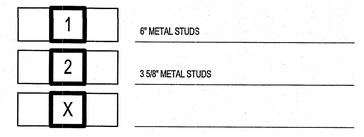

PARTITION

NO SCALE

C1010FP-20

- FINAL DESIGN - FOR AGENCY APPROVAL ONLY

LICENSED ARCHITECT PAUL R. MAKOWIECKI C-33907 6-30-17 RENEWAL DATE STATE OF CALIFORNIA

CALLISONRTKL A DESIGN CONSULTANCY OF ARCADIS

ARCADIS

NO.	DATE	DESCRIPTION	GM/SPEC	DWN	CHKD	SUPV	APVD BY
0	11/11/2015	FINAL DESIGN		KK	AS	RC	RAO

REVISIONS

APPROVED BY		
RAO	SO	
	SUPV	RC
	DSGN	CALLISON
	DWN	KK
	CHKD	AS
	OK	
	DATE	11/13/2015
	SCALES	As indicated

TOPOCK GROUNDWATER REMEDIATION PROJECT
OPERATION BUILDING (BUILDING 8)

WALL/PARTITION TYPES
GAS TRANSMISSION & DISTRIBUTION
PACIFIC GAS AND ELECTRIC COMPANY
SAN FRANCISCO, CALIFORNIA

MICROFILM	
BILL OF MATL	
DWG LIST	
SUPSDS	
SUPSD BY	
SHEET NO.	of SHEETS
A-08-21	REV 0

N1808

006-151658.00

COPYRIGHT © 2015 CALLISON

D:\1. LOCAL FILES\2. Mission Critical\Topock\Revit Files\TOPOCK-0_A_v2015 adam-2015-11-04.rvt 11/11/2015 2:06:19 PM

STRUCTURAL NOTES

DESIGN LOADS

All design and construction shall conform to the requirements of the International Building Code (IBC), 2012 Edition, as amended by the California Building Code.

LIVE LOADS: In addition to the dead loads, the following floor live loads were used for design. Live load reduction is per IBC Section 1607.10.

			Reducible	Unreducible
Corridors, Stairs	100	psf	X	
Offices	50	psf + 15 psf partition load	X	
Mechanical/Electrical Rms	65	psf or actual equipment weight		X

Refer to Table 1607.1 in the IBC for relevant concentrated live loads.

ROOF SNOW LOAD: The roof snow load is determined using Chapter 7 of ASCE 7 in accordance with IBC Section 1608 and with the following factors:

P_g = 0 psf
I_s = 1.0

SEISMIC LOADS: Earthquake and wind loads are resisted by special moment-resisting frames, braced frames, and shear walls. Earthquake design is based on the equivalent lateral force procedure in ASCE 7 Section 12.8 with the following factors:

Site Class D
Risk Category II
Seismic Design Category C

S_s	0.230g	h_n	17.5 ft
S_1	0.120g	T	___ seconds
S_{DS}	0.246g	T_L	___ seconds
S_{D1}	0.187g	I_E	1.0
R	7	C_s	0.03

V = Base Shear = ___ kips

WIND LOADS: Wind load is determined using Chapters 26-31 of ASCE 7 in accordance with IBC Section 1609 with the following factors:

Risk Category II		K_{zt}	1.0
Exposure Category C		GC_{pi}	0.18
V = 115 mph			

Design wind pressures for determining forces on components and cladding shall be determined using Chapter 30 of ASCE 7 in accordance with IBC Section 1609 by the California State Registered Professional Engineer who is responsible for the design of such elements, unless noted otherwise on the drawings.

STORY DRIFTS: The maximum lateral displacements with respect to the level below (story drifts) are as follows:

Seismic:

Inelastic Story Drift = 1.0% of story height

Elastic Story Drift = Inelastic Story Drift divided by Cd/I_E where Cd/I_E = 4.5

Wind:

Story Drift = 1.0% of story height

SOIL LOADS:

Allowable Soil-Bearing Pressure	2000	psf DL + LL
	2667	psf DL + LL + seismic/wind

GENERAL NOTES

SUBMITTALS: Shop drawings shall be submitted to the Architect prior to any fabrication or construction for all structural items, including the following: concrete reinforcement, embedded steel items, structural steel, and glued-laminated members.

If the shop drawings differ from or add to the design of the structural drawings, they shall bear the seal and signature of the California State Registered Professional Engineer who is responsible for the design.

DEFERRED SUBMITTALS: Per IBC Section 107.3.4.1, drawings and calculations for the design and fabrication of items that are designed by others shall bear the seal and signature of the Washington State Registered Professional Engineer who is responsible for the design and shall be submitted to the Architect and the building department for review prior to fabrication. Submitted calculations are for cursory review only and will generally not be returned. Deferred submittals include but are not limited to the following:

Skylight Framing
Equipment Anchorage
Seismic Design of Nonstructural Components

NONSTRUCTURAL COMPONENTS: Design, detailing and anchorage of all nonstructural components shall be in accordance with IBC Section 1613, ASCE 7 Chapter 13, and the project specifications. Nonstructural components designed by others shall not induce torsional loading into supporting steel structural members without additional bracing of those members to eliminate torsional forces. Torsional bracing shall be designed by the nonstructural component designer and approved by the Engineer.

INSPECTION: Special inspection per IBC Chapter 17 shall be performed by an approved testing agency as indicated in the Statement of Special Inspections and Testing. All prepared soil-bearing surfaces shall be inspected by the Geotechnical Engineer prior to placement of reinforcing steel. Soils compaction shall be supervised by an approved testing agency or Geotechnical Engineer.

SPECIAL CONDITIONS: Contractor shall verify all levels, dimensions, and existing conditions in the field before proceeding. Contractor shall notify the Architect of any discrepancies or field changes prior to installation or fabrication. In case of discrepancies between the existing conditions and the drawings, the Contractor shall obtain direction from the Architect before proceeding. Dimensions noted as plus or minus (±) indicate unverified dimensions and are approximate. Notify Architect immediately of conflicts or excessive variations from indicated dimensions. Noted dimensions take precedence over scaled dimensions--DO NOT SCALE DRAWINGS. Dimensions of existing conditions may be based on record drawings and are to be field-verified by the Contractor.

Contractor shall verify all existing conditions before commencing any demolition. Contractor shall provide adequate shoring and bracing of all structural members, existing construction and soil excavations, as required, and in a manner suitable to the work sequence. Temporary shoring and bracing shall not be removed until all final connections have been completed in accordance with the drawings and materials have achieved design strength. No reinforcing bars in existing construction shall be cut unless directed to by the Architect or as shown on the drawings.

Contractor shall be responsible for all safety precautions and the methods, techniques, sequences or procedures required to perform the work.

SOILS: See the Geotechnical report by CH2MHill dated September 2004 for more complete information. Earthwork material, backfill and compaction shall be in accordance with Drawing S-00-01. All topsoil organics and loose surface soil shall be removed from beneath fill supporting concrete slabs or paving.

CONCRETE

Concrete work shall conform to all requirements of IBC Chapter 19.

CONCRETE MIXES: Concrete mixes shall conform to the following requirements:

Concrete strength at 28 days:

	f'c	w/c ratio
Slab-on-grade, Walls & Footings	5,000 psi	0.40

The Contractor shall submit concrete mix designs for approval 2 weeks prior to placing any concrete. The mix design shall be in conformance with ACI 318, Chapter 5. The submittal shall indicate where each concrete mix is to be used on the project, as well as the maximum aggregate size of each mix. Maximum aggregate size shall conform to the project specifications.

ADMIXTURES: Water-reducing admixtures may be incorporated in concrete mix designs, but shall conform to ASTM C 494, and be used in strict accordance with the manufacturer's recommendations. $CaCl_2$ or other water-soluble chloride admixtures shall not be used.

WALTER/CEMENT RATIO: Water/cement ratio shall be measured by weight and shall be based on the total cementitious material. Water/cement ratio and water content shall be determined by the supplier based on strength requirements and shall not exceed the maximum water/cement ratio and/or water content if shown above or in the project specifications. For topping slabs, limit maximum water to 34 gallons per cubic yard of concrete.

SLUMP: Field-measured slump shall conform to Specification Section 03 30 00. Tolerance of slump shall conform to ASTM C 94.

AIR CONTENT: An air-entraining agent conforming to ASTM C 260 shall be used in all concrete mixes for flatwork which is exposed to weather. The amount of entrained air shall be 5 percent ±1 1/2 percent by volume. The amount of entrained air shall be measured in the field at the discharge from the truck.

CURING: If the air temperature will exceed 75 degrees F within 48 hours of placing concrete, a moist cure shall be applied to the concrete for a period of 36 hours after finishing concrete surfaces. Refer to the project specifications for curing requirements.

REINFORCING STEEL MATERIAL

Deformed Bars	ASTM A 615, Grade 60
Smooth Welded Wire Fabric (WWF)	ASTM A 185 (fy = 65,000 psi)
Deformed Welded Wire Fabric (DWF)	ASTM A 497 (fy = 70,000 psi)

REINFORCING STEEL: Reinforcing shall be supported as specified by the project specifications and the CRSI Manual of Standard Practice. Reinforcing steel shall be detailed in accordance with ACI Standard of practice as outlined in "Details and Detailing of Concrete Reinforcement, ACI 315.

Lap all reinforcing bars as noted on the drawings. Where splice length is not shown, use Type Lb (Lbt for top bars) splice per development and splice length schedule.
Reinforcing steel shall have protection as follows, unless noted otherwise:

Use		Cover	
Column Ties		1 1/2"	
Structural Slab-at-Grade Bottom Bars		2"	
Wall Bars:	Interior Faces	3/4"	
	Exposed to Earth or Weather	1 1/2"	(#5 and smaller)
		2"	(#6 and larger)
Footing:	Bottom Bars	3"	(cast against earth)
	Top Bars	1 1/2"	
		2"	(#6 and larger where exposed to earth or weather)
	Side Bars	2"	

NONSHRINK GROUT: Base plate grout shall be nonshrink type with minimum f'c = 8,000 psi. All other nonshrink grout shall have minimum f'c = 5,000 psi.

STRUCTURAL STEEL

REFERENCE SPECIFICATIONS

Structural Steel	AISC 360 - Specification for Structural Steel Buildings
High Strength Bolts	RCSC Specification for Structural Joints using High-Strength Bolts
Welding	AWS D1.1 , typical AWS D1.3 for steel deck and cold-formed framing AWS D1.8 for supplemental seismic provisions AWS prequalified joint details
Welder Certification	American Welding Society (AWS)
	Washington Association of Building Officials (WABO)

STEEL MATERIALS

Structural Steel	ASTM A 992
Connection material, embedded items, channels, angles, base plates, and misc. steel	ASTM A 36, unless noted otherwise
Structural Tubes (HSS)	ASTM A 500, Grade C
Steel Pipe	ASTM A 53, Grade B
Structural Bolts	ASTM A 325
Anchor Rods	ASTM F 1554, Grade 36
Threaded Rods	ASTM A 36
Welding Electrodes	70 ksi, low hydrogen, typical 60 ksi, minimum, steel deck and cold-formed framing

Structural steel design, fabrication and erection shall conform to the requirements of IBC Chapter 22. All members are to be erected with natural mill camber or induced camber up, unless otherwise noted on the plans. Substitution of member sizes or steel grade will not be allowed without prior approval of the Architect. Bolted connections are to be of high strength ASTM A 325 bolts as shown, unless noted otherwise. A minimum of two bolts is required for all beam connections. Alternative connections to those shown on these drawings will require prior approval of the Architect.

Beam camber indicated on drawings is the upward camber required in the beam as delivered to the job site. Contractor to consider camber loss, if any, due to shipping and handling.

The Contractor shall be responsible for all erection aids and joint preparations that include, but are not limited to, erection angles, lift holes and other aids, welding procedures, required root openings, root face dimensions, groove angles, backing bars, copes, surface roughness values, and unequal parts.

GALVANIZING: Structural steel and connections, including plates and other steel items embedded in concrete, which are exposed to weather and not to be painted shall be hot-dipped galvanized after fabrication in compliance with ASTM A 123. All field welds on galvanized material shall be coated with brush applied zinc-rich paint complying with the specifications.

WELDING: All welding shall be in conformance with AISC and AWS Standards, and shall be performed by AWS-WABO-certified welders using 70 ksi electrodes and low hydrogen processes. Only welds that are prequalified, as defined by AWS, or qualified by testing shall be used. Shop drawings shall show all welding with AWS A2.4 symbols. Welds shown on the drawings are minimum sizes. Increase weld size to AWS minimum sizes based on thickness. Minimum weld size shall be 3/16-inch, unless noted otherwise. The welds shown are for the final connections. Field weld symbols are shown where field welds are required by the structural design. Where field weld is not indicated, the Contractor is responsible for determining if a weld should be shop or field-welded in order to facilitate the structural steel erection.

ANCHORS

POST-INSTALLED ANCHORS: Provide post-installed anchors as specified in Specification Section 05 50 00.

Adhesives shall not be installed prior to the concrete reaching an age of 21 days as required by ACI 318.

COLD-FORMED STEEL

Cold-formed steel framing members shall be of the type, shape, size, gauge, and spacing as shown on the drawings. Member types and sizes shown on the drawings refer to members as defined by the Steel Stud Manufacturers Association (SSMA). Members equivalent in shape, size, stiffness, and strength by other manufacturers may be substituted for framing members shown. Alternate members shall be subject to review and approval by the Architect and Structural Engineer prior to fabrication and erection. All cold-formed steel framing shall conform to the AISI S100 - "North American Specification for the Design of Cold-Formed Steel Structural Members." All studs, tracks and joists shall be galvanized. Fastenings shall be as shown on the drawings. Fastenings not shown shall be as recommended by the manufacturer.

Cold-formed steel welding shall be in accordance with AWS D1.3, "Specification for Welding Sheet Steel in Structures." Welders shall be qualified by WABO Sheet Steel Welder Certification Program.

DRAWING LIST

S-08-01	General Notes and Drawing List
S-08-02	General Notes, Abbreviations and Symbols
S-08-03	Special Inspections (NOT SUBMITTED)
S-08-04	Special Inspections (NOT SUBMITTED)
S-08-05	Foundation and Level 1 Plan
S-08-06	Lower Roof Framing Plan
S-08-07	Upper Roof Framing Plan
S-08-08	Sections and Elevations
S-08-09	Typical Concrete Details
S-08-10	Concrete Details
S-08-11	Steel and Wood Details
S-08-12	Steel and Wood Details
S-08-13	Steel and Wood Details (NOT SUBMITTED)
S-08-14	Typical Cold - Formed Details
S-08-15	Typical Cold - Formed Details

- FINAL DESIGN - FOR AGENCY APPROVAL ONLY

REGISTERED PROFESSIONAL ENGINEER CRAIG D. OLSON STRUCTURAL STATE OF CALIFORNIA
No. 39067 Exp.06/30/16
11/18/15

11/9/2015 1:44:03 PM

kpff
1601 5th Avenue, Suite 1600
Seattle, WA 98101
206.622.5822
www.kpff.com

ARCADIS

NO.	DATE	DESCRIPTION	GM/SPEC	DWN	CHKD	SUPV	APVD BY
0	11/18/2015	FINAL DESIGN	JBB	AMR	AWE	RAO	

REVISIONS

APPROVED BY		
RAO	SUPV	AWE
	DSGN	AMR
	DWN	JBB
	CHKD	AMR
	OK	
	DATE	11/18/15
	SCALES	12" = 1'-0"

TOPOCK GROUNDWATER REMEDIATION PROJECT
OPERATION BUILDING (BUILDING 8)
General Notes and Drawing List
GAS TRANSMISSION & DISTRIBUTION
PACIFIC GAS AND ELECTRIC COMPANY
SAN FRANCISCO, CALIFORNIA

MICROFILM	
BILL OF MATL	
DWG LIST	
SUPSDS	
SUPSD BY	
SHEET NO.	of SHEETS
S-08-01	REV 0

C:\Revit Models\2015\STOPOCK-d_S_v2015_CENTRAL_Randy1.rvt

006-151658.00

COPYRIGHT © 2015 CALLISON

N1808

STRUCTURAL NOTES

WOOD

IDENTIFICATION: All sawn lumber and pre-manufactured wood products shall be identified by the grade mark or a certificate of inspection issued by the certifying agency.

SAWN LUMBER: Sawn lumber shall conform to "Grading and Dressing Rules," West Coast Lumber Inspection Bureau (WCLIB), latest edition. Lumber shall be kiln dried and be the species and grade noted below. Design stresses are based on NDS. All lumber in contact with cmu, concrete, or ground surfaces shall be preservative treated.

Use	Grade	Fb (psi) (single use)
Wall Studs		
2" to 4" thick, 2" and wider	Douglas Fir-Larch No. 2	900
Planking & Plates		
2" to 4" thick, 2" and wider	Douglas Fir-Larch No. 2	900
Joists & Rafters		
2" to 4" thick, 2" and wider	Douglas Fir-Larch No. 2	900
Beam/Stringers		
5"x5" and larger	Douglas Fir-Larch No. 1	1,350
Posts		
5"x5" and larger	Douglas Fir-Larch No. 1	1,200
4"x4"	Douglas Fir-Larch No. 1	1,000

TIMBER CONNECTIONS: Connectors called out by letters and numbers shall be "Strong-Tie" by Simpson Company, as specified in the catalogue No. C-C-2015, or approved equal. Provide number and size of fasteners as specified by the manufacturer. Connectors are to be installed in accordance with the manufacturer's recommendations. Where connector straps connect two members, place one-half of the nails or bolts in each member. All bolts in wood members shall conform to ASTM A307. Provide washers under the heads and nuts of all bolts and lag screws bearing on wood. All shims shall be seasoned and dried and be the same grade (min) as members connected. All joists are to be connected to flush beams with LU series joist hangers, uno. All double and triple-joist beams are to be connected to flush beams with U series hangers, uno.

All framing nails shall be common nails and shall be of the size and number indicated on the drawings. Nailing not shown shall be as indicated in Table 2304.9.1 of the IBC.

Power-driven nails may be substituted for common nails at spacing as follows:

ALTERNATE NAILING SCHEDULE						
Fastener Type	Diameter (inches)	Length (inches)	Spacing			
8d common wire	.131	2 1/2"	12"	6"	4"	3"
16d power-driven nail	.131	3 1/4"	12"	6"	4"	3"
10d common wire	.148	3"	12"	6"	4"	3"
16d power-driven nail	.131	3 1/4"	10"	4"	3"	2"
16d common wire	.162	3 1/2"	12"	6"	4"	3"
16d power-driven nail	.131	3 1/4"	9"	4"	3"	2"

All framing accessories and fasteners in contact with preservative-treated lumber shall be galvanized with a minimum coating of 1.85 ounces/square foot.

RATED SHEATHING: Wood structural panels shall conform to the requirements of the latest edition of U.S. Department of Commerce (DOC) PS-1 "Construction and Industrial Plywood" or DOC PS-2 "Performance Standard for Wood-based Structural-use Panels". Each panel shall bear the APA grade trademark of the American Plywood Association. Sheathing shall be as follows:

Roof Sheathing
19/32" 40/20 C-D INT APA with Exterior Glue (CDX)

Shear Wall Sheathing
Sure-Board Series 200

All roof sheathing shall be installed face grain perpendicular to supports or as indicated on the drawings. Roof sheathing shall be unblocked or as indicated on drawings. Install with 1/8" gap between panels. Shear wall sheathing shall be blocked at all panel edges as indicated in the shear wall schedule, unless noted otherwise. Floor diaphragm nails shall be driven flush, but shall not fracture the surface of sheathing. Nailing not shown shall be as indicated in IBC Table 2304.9.1. All nails shall be common.

GLUED JOISTS AND ROOF SYSTEM: All plywood shall be glued to the roof joists. The field-glued floor system shall be installed according to the recommendations of the American Plywood Association. Glue shall be applied to the joists and to the groove in the edge of the T&G panels. Glue shall meet the requirements of the American Plywood Association Adhesive Specification AFG-01 and shall be applied as directed by the glue manufacturer. Glue may be applied manually or with pneumatic or electric equipment.

GLUED LAMINATED MEMBERS: Glued laminated members shall be manufactured and identified in accordance with American Institute of Timber Construction (AITC) A190.1 "Structural Glue Laminated Timber". Each member shall bear an AITC identification mark and be accompanied by an AITC certificate of conformance. One coat of end sealer shall be applied immediately after trimming in either shop or field. Members shall be visually graded Western Species *framing* *industrial, architectural, premium* grade with strength indicated as follows:

	Combination Symbol	Species	Sizes	Uses
Beams	24F - V4	DF/DF	>16" Depth	Simple span
	24F - V8	DF/DF	>16" Depth	Continuous or cantilever span
Columns	2 - L2	DF	All	All
Pitched and Curved Beams	24F - V8	DF/DF	All	All

ENGINEERED COMPOSITE LUMBER: Engineered composite wood products such as Parallel Strand Lumber (PSL), Laminated Strand Lumber (LSL) and Laminated Veneer Lumber (LVL) shall be of the size and type shown on the drawings, manufactured by Trus Joist or an approved equal. Members shall have the following minimum design properties:

Composite Lumber Type	Modulus of Elasticity (psi)	Allowable Flexural Stress (psi)
PSL (col)	1,800,000	2,400
PSL (beam)	2,000,000	2,900
LVL	1,900,000	2,600
LSL	1,300,000	1,700
LSL	1,550,000	2,325

Flexural stresses noted above are for a 12-inch member. Deeper members shall be designed for reduced stresses per the manufacturer's requirements.

- FINAL DESIGN - FOR AGENCY APPROVAL ONLY

REGISTERED PROFESSIONAL ENGINEER CRAIG D. OLSEN No. S-3909 Exp.06/30/17 STRUCTURAL STATE OF CALIFORNIA 11/18/15

kpff
1601 5th Avenue, Suite 1600
Seattle, WA 98101
206.622.5822
www.kpff.com

ARCADIS

NO.	DATE	DESCRIPTION	GM/SPEC	DWN	CHKD	SUPV	APVD BY
0	11/18/2015	FINAL DESIGN		JBB	AMR	AWE	RAO

REVISIONS

APPROVED BY	
RAO	

SO	
SUPV	AWE
DSGN	AMR
DWN	JBB
CHKD	AMR
OK	
DATE	11/18/15
SCALES	12" = 1'-0"

TOPOCK GROUNDWATER REMEDIATION PROJECT
OPERATION BUILDING
(BUILDING 8)
General Notes, Abbreviations and Symbols
GAS TRANSMISSION & DISTRIBUTION
PACIFIC GAS AND ELECTRIC COMPANY
SAN FRANCISCO, CALIFORNIA

MICROFILM	
BILL OF MATL	
DWG LIST	
SUPSDS	
SUPSD BY	
SHEET NO.	of SHEETS
S-08-02	REV 0

N1808

006-151658.00

COPYRIGHT © 2015 CALLISON

C:\Revit Models\2015\TOPOCK-8_S_v2015_CENTRAL_Sandy.rvt 11/9/2015 1:44:04 PM

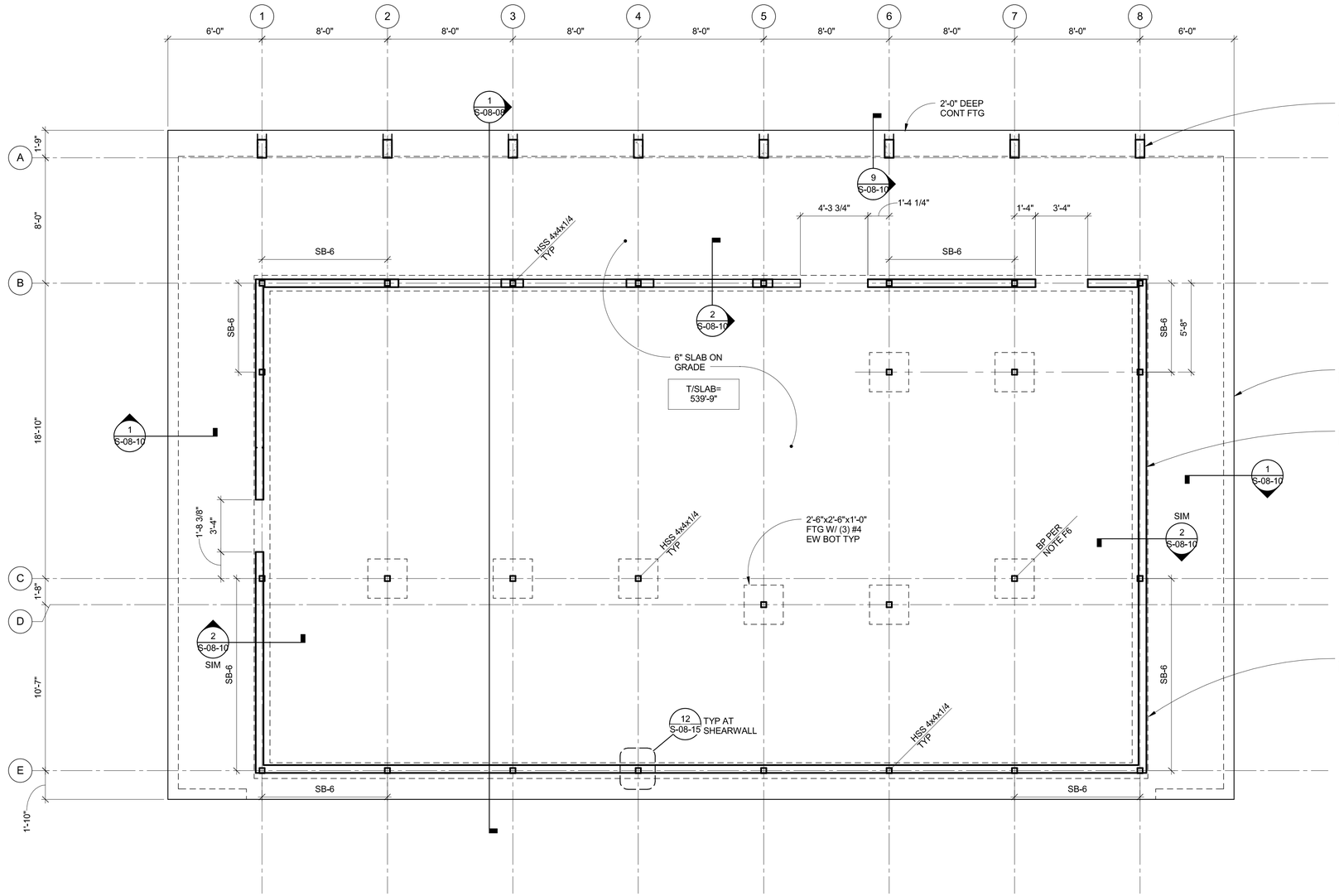

1 FOUNDATION AND LEVEL 1 PLAN

1/4" = 1'-0"

GENERAL PLAN NOTES

G1. SEE S-08-01 TO S-08-04 FOR STRUCTURAL NOTES, INSPECTION SCHEDULE, SYMBOLS AND ABBREVIATIONS.

G2 REFERENCE DRAWINGS:

S-08-08	-	BUILDING ELEVATIONS & SECTIONS
S-08-09 & S-08-10	-	CONCRETE DETAILS
S-08-11 TO S-08-13	-	STEEL AND WOOD DETAILS
S-08-14 & S-08-15	-	COLD-FORMED DETAILS

G3. CONTRACTOR SHALL COORDINATE SIZE AND LOCATION OF ALL HOUSEKEEPING PADS AND CURBS WITH THE ARCHITECTURAL, MECHANICAL AND ELECTRICAL DRAWINGS. SEE DETAIL 7/S-08-09.

G4. CONTRACTOR SHALL COORDINATE ALL OPENING DIMENSIONS, SLAB PENETRATIONS, BLOCKOUTS, DEPRESSIONS AND EMBEDS WITH THE ARCHITECTURAL, MECHANICAL, PLUMBING, AND ELECTRICAL DRAWINGS. ENGINEER SHALL BE NOTIFIED OF ALL OPENING/PENETRATIONS THAT ARE ADDED OR CHANGED FROM WHAT IS SHOWN ON THIS PLAN.

G5. ONLY STRUCTURAL WALLS ARE SHOWN. SEE ARCHITECTURAL DRAWINGS FOR ADDITIONAL WALLS OR EXTENTS.

G6. VERIFY ALL DIMENSIONS WITH THE ARCHITECTURAL DRAWINGS PRIOR TO CONSTRUCTION.

FOUNDATION PLAN NOTES

F1. SLAB-ON-GRADE THIS LEVEL TO BE REINFORCED W/ #5 @ 15" OC EW, MID-DEPTH. SEE TYPICAL SLAB-ON-GRADE DETAILS 1/S-08-09 & 2/S-08-09.

F2. XX'-X" INDICATES TYPICAL TOP OF SLAB ELEVATION. COORDINATE WITH ARCHTECTURAL DRAWINGS FOR ALL SLOPES TO DRAIN.

F3. (-X) INDICATES TOP OF CONCRETE SLAB RELATIVE TO TYPICAL TOP OF SLAB ELEVATION.

F4. (XX'-X") INDICATES BOTTOM OF FOOTING ELEVATION.

F5. HSS DENOTES STEEL COLUMN ON LEVEL WHERE THEY ORIGINATE.

F6. BP DENOTES BASEPLATE PER 4/S-08-11. COORDINATE ORIENTATION TO BE CONCEALED WITHIN WALLS (SEE ARCH FOR LOCATIONS).

F7. SB-X INDICATES SHEAR WALL PER 5/S-08-15.

SCALE: 1/4" = 1'-0"
AT: 22"x 34"
0 4' 8' 16'

- FINAL DESIGN -
FOR AGENCY
APPROVAL ONLY

REGISTERED PROFESSIONAL ENGINEER
CRAIG D. OLSEN
No. S-3967
Exp.06/30/16
STRUCTURAL
STATE OF CALIFORNIA
11/18/15

kpff
1601 5th Avenue, Suite 1600
Seattle, WA 98101
206.622.5822
www.kpff.com

ARCADIS

NO.	DATE	DESCRIPTION	GM/SPEC	DWN	CHKD	SUPV	APVD BY
0	11/18/2015	FINAL DESIGN	JBB	AMR	AWE	RAO	

REVISIONS

APPROVED BY	
RAO	

SO	
SUPV	AWE
DSGN	AMR
DWN	JBB
CHKD	AMR
OK	
DATE	11/18/15
SCALES	1/4" = 1'-0"

TOPOCK GROUNDWATER REMEDIATION PROJECT
OPERATION BUILDING (BUILDING 8)
Foundation and Level 1 Plan
GAS TRANSMISSION & DISTRIBUTION
PACIFIC GAS AND ELECTRIC COMPANY
SAN FRANCISCO, CALIFORNIA

MICROFILM	
BILL OF MATL	
DWG LIST	
SUPSDS	
SUPSD BY	
SHEET NO.	of SHEETS
S-08-05	REV 0

006-151658.00

COPYRIGHT © 2015 CALLISON

N1808

C:\Revit Models\2015\TOPOCK4_S_v2015_CENTRAL_RandyH.rvt
11/6/2015 1:44:05 PM

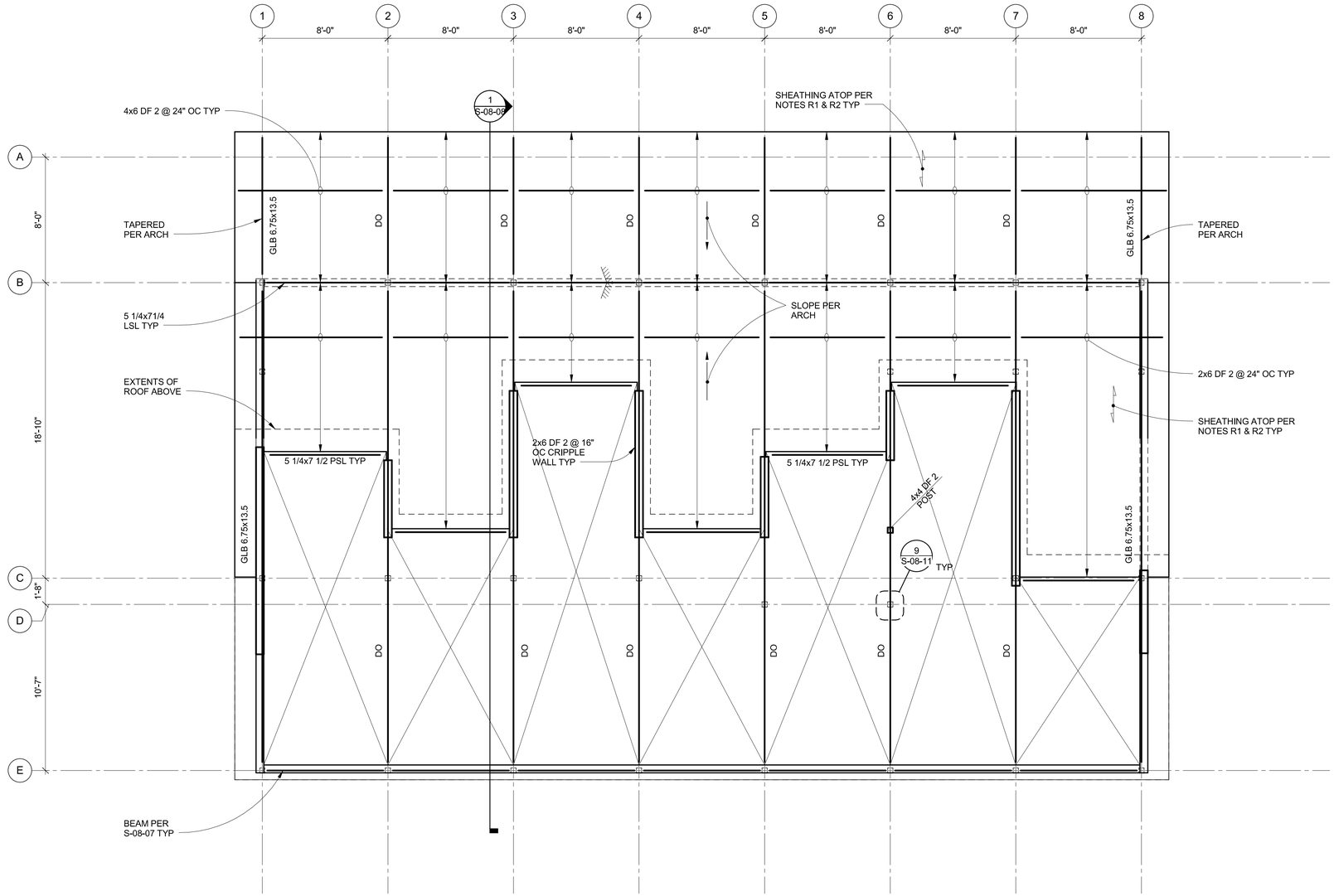

1 LOWER ROOF FRAMING PLAN

1/4" = 1'-0"

GENERAL PLAN NOTES

G1. SEE S-08-01 TO S-08-04 FOR STRUCTURAL NOTES, INSPECTION SCHEDULE, SYMBOLS AND ABBREVIATIONS.

G2 REFERENCE DRAWINGS:

S-08-08	-	BUILDING ELEVATIONS & SECTIONS
S-08-09 & S-08-10	-	CONCRETE DETAILS
S-08-11 TO S-08-13-		STEEL AND WOOD DETAILS
S-08-14 & S-08-15	-	COLD-FORMED DETAILS

G3. CONTRACTOR SHALL COORDINATE ALL OPENING DIMENSIONS, SLAB PENETRATIONS, BLOCKOUTS, DEPRESSIONS AND EMBEDS WITH THE ARCHITECTURAL, MECHANICAL, PLUMBING, AND ELECTRICAL DRAWINGS. ENGINEER SHALL BE NOTIFIED OF ALL OPENING/PENETRATIONS THAT ARE ADDED OR CHANGED FROM WHAT IS SHOWN ON THIS PLAN.

G4. ONLY STRUCTURAL WALLS ARE SHOWN. SEE ARCHITECTURAL DRAWINGS FOR ADDITIONAL WALLS OR EXTENTS.

G5. VERIFY ALL DIMENSIONS WITH THE ARCHITECTURAL DRAWINGS PRIOR TO CONSTRUCTION.

ROOF FRAMING PLAN NOTES

R1. ROOF SHEATHING TO BE 19/32" PLYWOOD PER S-08-01 TYP.

R2. PROVIDE DIAPHRAGM NAILING AS INDICATED ON 1/S-08-12.

R3. SEE ARCH FOR ROOF ELEVATIONS.

- FINAL DESIGN -
FOR AGENCY
APPROVAL ONLY

REGISTERED PROFESSIONAL ENGINEER
CRAIG D. OLSON
No. S 3900
Exp.06/30/16
STRUCTURAL
STATE OF CALIFORNIA
11/18/15

SCALE: 1/4" = 1'-0"
AT: 22"x 34"
0 4' 8' 16'

kpff
1601 5th Avenue, Suite 1600
Seattle, WA 98101
206.622.5822
www.kpff.com

ARCADIS

NO.	DATE	DESCRIPTION	GM/SPEC	DWN	CHKD	SUPV	APVD BY
0	11/18/2015	FINAL DESIGN		JBB	AMR	AWE	RAO

REVISIONS

APPROVED BY	SO
RAO	SUPV AWE
	DSGN AMR
	DWN JBB
	CHKD AMR
	OK
	DATE 11/18/15
	SCALES 1/4" = 1'-0"

TOPOCK GROUNDWATER REMEDIATION PROJECT
OPERATION BUILDING
(BUILDING 8)
Lower Roof Framing Plan
GAS TRANSMISSION & DISTRIBUTION
PACIFIC GAS AND ELECTRIC COMPANY
SAN FRANCISCO, CALIFORNIA

MICROFILM	
BILL OF MATL	
DWG LIST	
SUPSDS	
SUPSD BY	
SHEET NO.	of SHEETS
S-08-06	REV 0

006-151658.00

COPYRIGHT © 2015 CALLISON

N1808

11/9/2015 1:44:06 PM

C:\Revit Models\2015\TOPOCK\d_S_-2015_CENTRAL_Randy.rvt

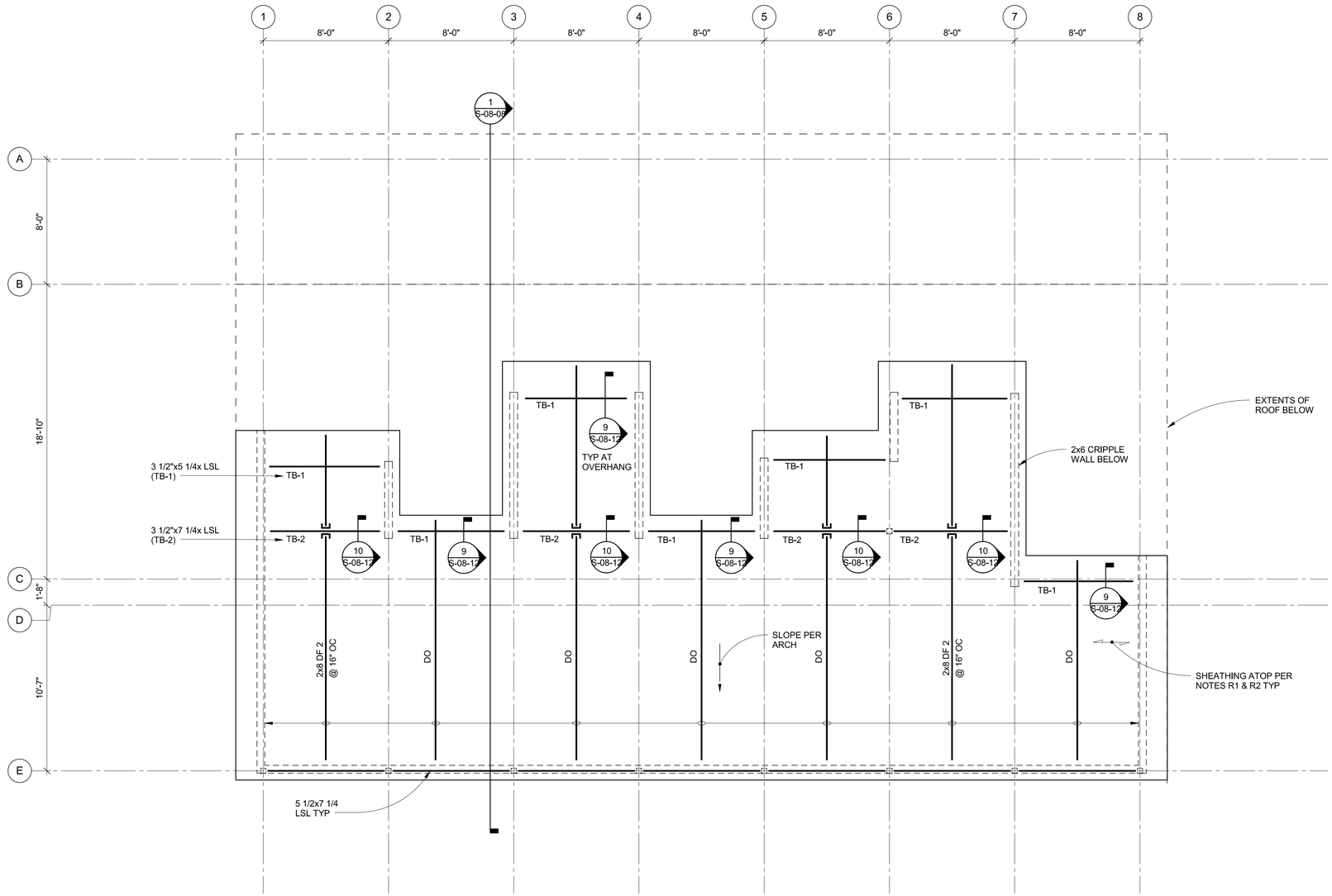

1 UPPER ROOF FRAMING PLAN

1/4" = 1'-0"

GENERAL PLAN NOTES

G1. SEE S-08-01 TO S-08-04 FOR STRUCTURAL NOTES, INSPECTION SCHEDULE, SYMBOLS AND ABBREVIATIONS.

G2 REFERENCE DRAWINGS:
- S-08-08 - BUILDING ELEVATIONS & SECTIONS
- S-08-09 & S-08-10 - CONCRETE DETAILS
- S-08-11 TO S-08-13- STEEL AND WOOD DETAILS
- S-08-14 & S-08-15 - COLD-FORMED DETAILS

G3. CONTRACTOR SHALL COORDINATE ALL OPENING DIMENSIONS, SLAB PENETRATIONS, BLOCKOUTS, DEPRESSIONS AND EMBEDS WITH THE ARCHITECTURAL, MECHANICAL, PLUMBING, AND ELECTRICAL DRAWINGS. ENGINEER SHALL BE NOTIFIED OF ALL OPENING/PENETRATIONS THAT ARE ADDED OR CHANGED FROM WHAT IS SHOWN ON THIS PLAN.

G4. ONLY STRUCTURAL WALLS ARE SHOWN. SEE ARCHITECTURAL DRAWINGS FOR ADDITIONAL WALLS OR EXTENTS.

G5. VERIFY ALL DIMENSIONS WITH THE ARCHITECTURAL DRAWINGS PRIOR TO CONSTRUCTION.

ROOF FRAMING PLAN NOTES

R1. ROOF SHEATHING TO BE 19/32" PLYWOOD PER S-08-01 TYP.

R2. PROVIDE DIAPHRAGM NAILING AS INDICATED ON 1/S-08-12.

R3. SEE ARCH FOR ROOF ELEVATIONS.

- FINAL DESIGN - FOR AGENCY APPROVAL ONLY

REGISTERED PROFESSIONAL ENGINEER CRAIG D. OLSEN No. S 3967 Exp.06/30/16 STRUCTURAL STATE OF CALIFORNIA 11/18/15

SCALE: 1/4" = 1'-0"
AT: 22"x 34"
0 4' 8' 16'

kpff
1601 5th Avenue, Suite 1600
Seattle, WA 98101
206.622.5822
www.kpff.com

ARCADIS

NO.	DATE	DESCRIPTION	GM/SPEC	DWN	CHKD	SUPV	APVD BY
0	11/18/2015	FINAL DESIGN	JBB	AMR	AWE	RAO	

REVISIONS

APPROVED BY	
RAO	

SO	
SUPV	AWE
DSGN	AMR
DWN	JBB
CHKD	AMR
OK	
DATE	11/18/15
SCALES	1/4" = 1'-0"

TOPOCK GROUNDWATER REMEDIATION PROJECT
OPERATION BUILDING
(BUILDING 8)
Upper Roof Framing Plan
GAS TRANSMISSION & DISTRIBUTION
PACIFIC GAS AND ELECTRIC COMPANY
SAN FRANCISCO, CALIFORNIA

MICROFILM	
BILL OF MATL	
DWG LIST	
SUPSDS	
SUPSD BY	
SHEET NO.	of SHEETS
S-08-07	REV 0

006-151658.00

COPYRIGHT © 2015 CALLISON

N1808

C:\Revit Models\2015\TOPOCK-8_S_v2015_CENTRAL_Randyf.rvt
11/6/2015 1:44:07 PM

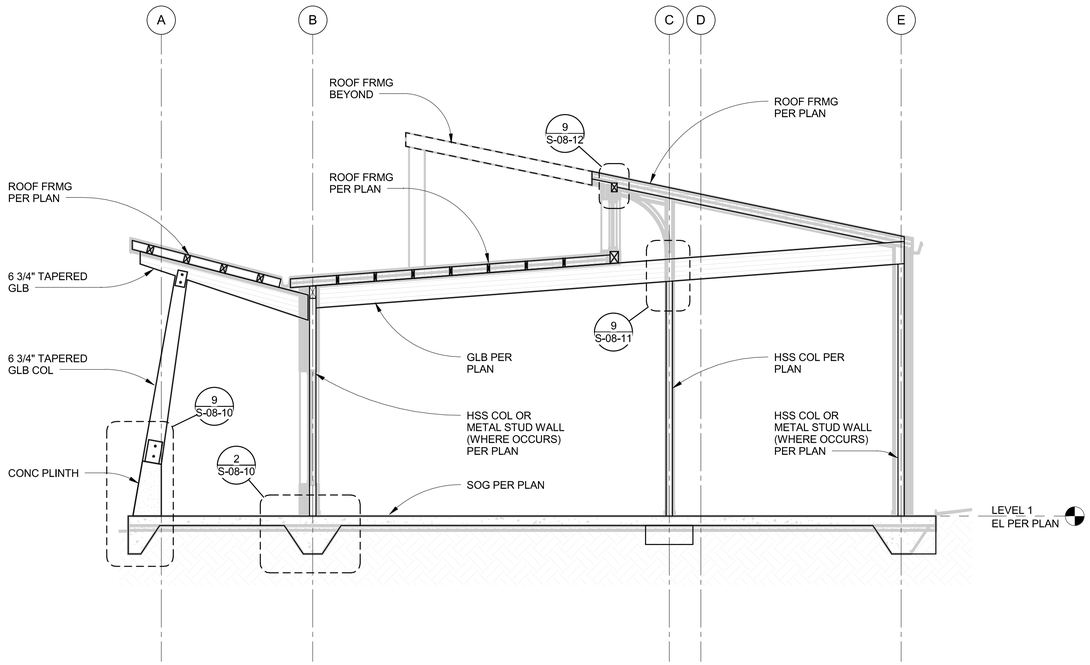

1 BUILDING SECTION

1/4" = 1'-0"

- FINAL DESIGN - FOR AGENCY APPROVAL ONLY

REGISTERED PROFESSIONAL ENGINEER CRAIG D. OLSON Exp.06/30/16 STRUCTURAL STATE OF CALIFORNIA 11/18/15

kpff
1601 5th Avenue, Suite 1600
Seattle, WA 98101
206.622.5822
www.kpff.com

ARCADIS

NO.	DATE	DESCRIPTION	GM/SPEC	DWN	CHKD	SUPV	APVD BY
0	11/18/2015	FINAL DESIGN		JBB	AMR	AWE	RAO

REVISIONS

APPROVED BY	
RAO	

SO	
SUPV	AWE
DSGN	AMR
DWN	JBB
CHKD	AMR
OK	
DATE	11/18/15
SCALES	1/4" = 1'-0"

TOPOCK GROUNDWATER REMEDIATION PROJECT
OPERATION BUILDING
(BUILDING 8)
Sections and Elevations
GAS TRANSMISSION & DISTRIBUTION
PACIFIC GAS AND ELECTRIC COMPANY
SAN FRANCISCO, CALIFORNIA

MICROFILM	
BILL OF MATL	
DWG LIST	
SUPSDS	
SUPSD BY	
SHEET NO.	of SHEETS
S-08-08	REV 0

N1808

006-151658.00

COPYRIGHT © 2015 CALLISON

C:\Revit Models\2015\TOPOCK-8_S_2015_CENTRAL_Sandy5.rvt 11/9/2015 1:44:08 PM

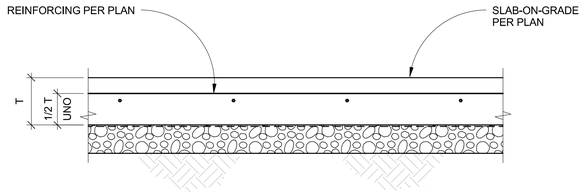

NOTES:
1. REFER TO ARCHITECTURAL ASSEMBLY SCHEDULE FOR VAPOR BARRIER REQUIREMENTS.

1 TYPICAL SLAB ON GRADE SECTION

NO SCALE

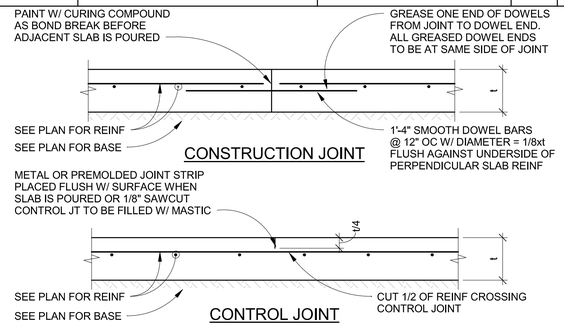

CONSTRUCTION JOINT

CONTROL JOINT

NOTES:
1. REFER TO PLAN FOR SLAB THICKNESS AND REINFORCING.
2. CONTROL JOINTS TO BE SPACED @ 20'-0" OC MAX. EACH WAY. UNO. RATIO OF DISTANCE BETWEEN CONTROL JOINTS IN EACH DIRECTION FOR A SLAB PANEL SHALL NOT EXCEED 1.5. CONSTRUCTION JOINTS PER THIS DETAIL SHALL BE CONSIDERED AS CONTROL JOINTS FOR CONTROL JOINT SPACING REQUIREMENT.

2 TYP SOG CONTROL AND CONSTR JT DETS

NO SCALE

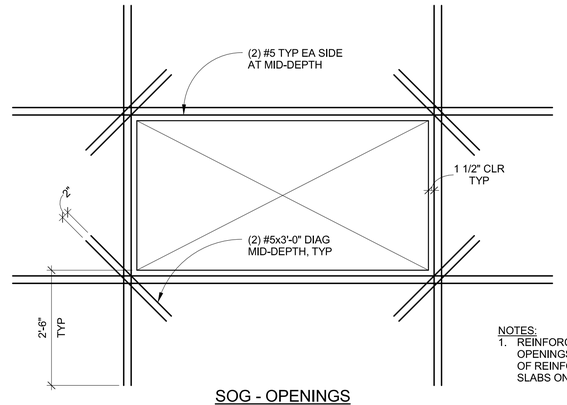

SOG - OPENINGS

NOTES:
1. REINFORCING SHALL BE ADDED AT OPENINGS AND RE-ENTRANT CORNERS OF REINFORCED AND UNREINFORCED SLABS ON GRADE.

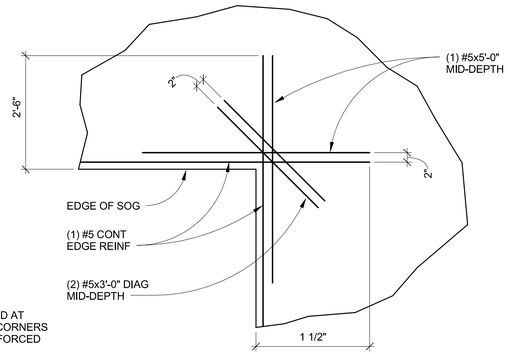

SOG - RE-ENTRANT CORNERS

3 TYPICAL SLAB ON GRADE TRIM REINFORCING

NO SCALE

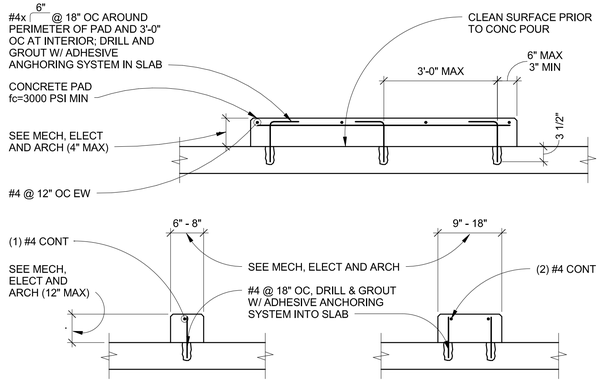

NOTES:
1. EQUIPMENT PAD SIZE TO BE 6" LARGER THAN EQUIPMENT IN EACH DIRECTION, UNO
   COORDINATE EXACT SIZE AND LOCATION OF CURB AND PADS WITH EQUIPMENT PROVIDED.

f'c=3,000 psi
fy=60,000 psi

Size	Ld	Ldt	Ld	Lbt	Ldh
#4	22	28	28	37	11
#5	27	36	36	46	14
#6	33 (49)	43 (64)	43 (64)	56 (83)	15
#7	48 (72)	62 (93)	62 (93)	81 (121)	19
#8	55 (82)	71 (107)	71 (107)	93 (139)	22
#9	62 (93)	80 (120)	80 (120)	104 (157)	25
#10	70 (104)	90 (136)	90 (136)	118 (176)	28
#11	77 (116)	100 (151)	100 (151)	131 (196)	31

NOTES:
1. USE THE LENGTHS IN THIS SCHEDULE, UNLESS NOTED OTHERWISE.
2. USE LENGTH IN ( ) WHEN BAR COVER IS db OR LESS OR BAR CLEAR SPACING IS 2db OR LESS.
3. A TOP BAR IS HORIZONTAL BAR WITH MORE THAN 12" OF FRESH CONCRETE CAST BELOW IT.

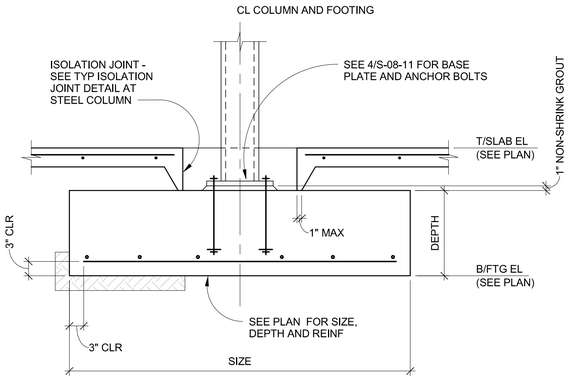

5 TYP INTERIOR STL COL FOOTING DETAIL

NO SCALE

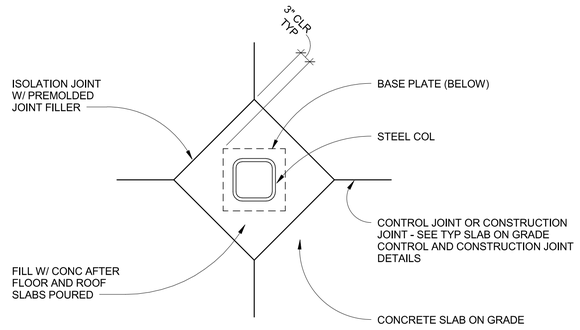

7 TYP CURBS & PADS ON CONC SOG

NO SCALE

8 DEVELOPMENT & SPLICE LENGTH SCHED

NO SCALE

9 TYP ISO JOINT DETAIL @ STL COL

NO SCALE

- FINAL DESIGN - FOR AGENCY APPROVAL ONLY

REGISTERED PROFESSIONAL ENGINEER CRAIG D. OLSON No. S 3900 Exp.06/30/16 STRUCTURAL STATE OF CALIFORNIA 11/18/15

11/5/2015 1:44:08 PM

C:\Revit Models\2015\TOPOCK\d_S_-2015_CENTRAL_Randy.rvt

kpff
1601 5th Avenue, Suite 1600
Seattle, WA 98101
206.622.5822
www.kpff.com

ARCADIS

NO.	DATE	DESCRIPTION	GM/SPEC	DWN	CHKD	SUPV	APVD BY
0	11/18/2015	FINAL DESIGN		JBB	AMR	AWE	RAO

REVISIONS

APPROVED BY	
RAO	

SO	
SUPV	AWE
DSGN	AMR
DWN	JBB
CHKD	AMR
OK	
DATE	11/18/15
SCALES	As indicated

TOPOCK GROUNDWATER REMEDIATION PROJECT
OPERATION BUILDING
(BUILDING 8)
Typical Concrete Details
GAS TRANSMISSION & DISTRIBUTION
PACIFIC GAS AND ELECTRIC COMPANY
SAN FRANCISCO, CALIFORNIA

MICROFILM	
BILL OF MATL	
DWG LIST	
SUPSDS	
SUPSD BY	
SHEET NO.	of SHEETS
S-08-09	REV 0

006-151658.00

COPYRIGHT © 2015 CALLISON

N1808

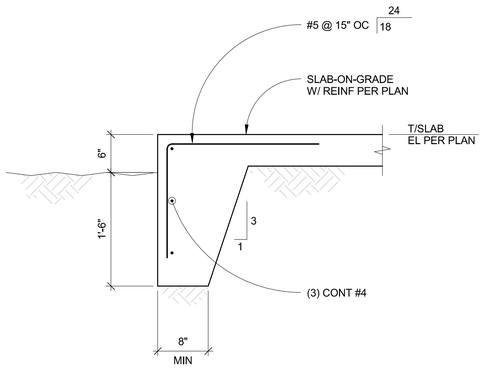

1 SECTION
1" = 1'-0"

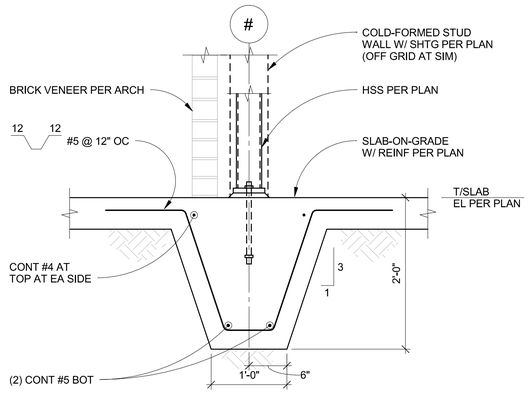

2 SECTION
1" = 1'-0"

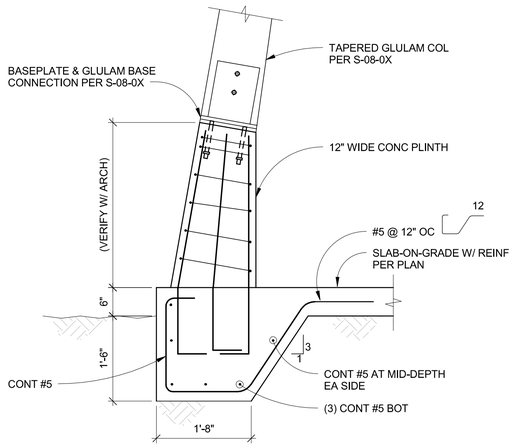

9 SECTION
3/4" = 1'-0"

- FINAL DESIGN -
FOR AGENCY
APPROVAL ONLY

REGISTERED PROFESSIONAL ENGINEER
CRAIG D. OLSEN
No. S-3908
Exp.06/30/16
STRUCTURAL
STATE OF CALIFORNIA
11/18/15

kpff
1601 5th Avenue, Suite 1600
Seattle, WA 98101
206.622.5822
www.kpff.com

ARCADIS

NO.	DATE	DESCRIPTION	GM/SPEC	DWN	CHKD	SUPV	APVD BY
0	11/18/2015	FINAL DESIGN		JBB	AMR	AWE	RAO

REVISIONS

APPROVED BY	
RAO	
SO	
SUPV	AWE
DSGN	AMR
DWN	JBB
CHKD	AMR
OK	
DATE	11/18/15
SCALES	As indicated

TOPOCK GROUNDWATER REMEDIATION PROJECT
OPERATION BUILDING (BUILDING 8)
Concrete Details
GAS TRANSMISSION & DISTRIBUTION
PACIFIC GAS AND ELECTRIC COMPANY
SAN FRANCISCO, CALIFORNIA

MICROFILM	
BILL OF MATL	
DWG LIST	
SUPSDS	
SUPSD BY	
SHEET NO.	of SHEETS
S-08-10	REV 0

N1808

006-151658.00

COPYRIGHT © 2015 CALLISON

C:\Revit Models\2015\TOPOCK-8_S_v2015_CENTRAL_Sandy5.rvt
11/9/2015 1:44:09 PM

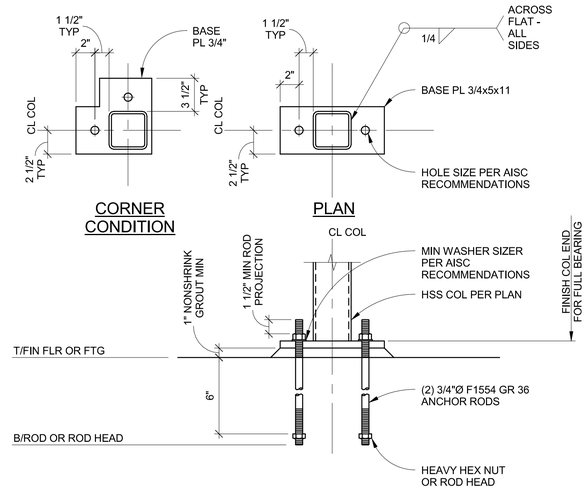

4 TYP HSS COLUMN BASE PLATE

1 1/2" = 1'-0"

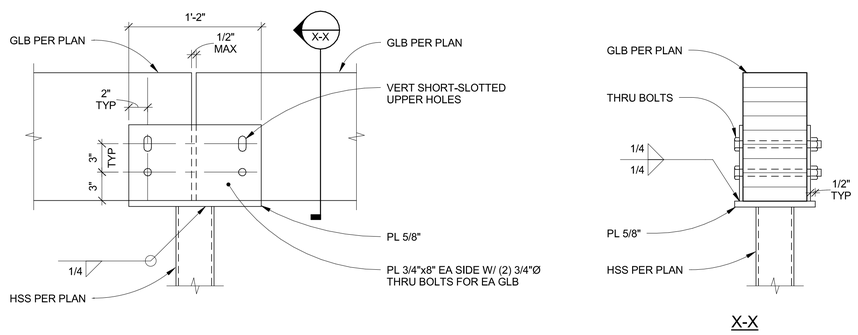

9 TYP INTERIOR BEAM - SEAT ELEV (GLB TO HSS COL)

1 1/2" = 1'-0"

- FINAL DESIGN - FOR AGENCY APPROVAL ONLY

REGISTERED PROFESSIONAL ENGINEER CRAIG D. OLSON No. S 3909 Exp. 06/30/16 STRUCTURAL STATE OF CALIFORNIA 11/18/15

kpff
1601 5th Avenue, Suite 1600
Seattle, WA 98101
206.622.5822
www.kpff.com

ARCADIS

NO.	DATE	DESCRIPTION	GM/SPEC	DWN	CHKD	SUPV	APVD BY
0	11/18/2015	FINAL DESIGN		JBB	AMR	AWE	RAO

REVISIONS

APPROVED BY		
RAO	SO	
	SUPV	AWE
	DSGN	AMR
	DWN	JBB
	CHKD	AMR
	OK	
	DATE	11/18/15
	SCALES	1 1/2" = 1'-0"

TOPOCK GROUNDWATER REMEDIATION PROJECT
OPERATION BUILDING
(BUILDING 8)
Steel and Wood Details
GAS TRANSMISSION & DISTRIBUTION
PACIFIC GAS AND ELECTRIC COMPANY
SAN FRANCISCO, CALIFORNIA

MICROFILM
BILL OF MATL
DWG LIST
SUPSDS
SUPSD BY
SHEET NO. of SHEETS
S-08-11
REV 0

006-151658.00

COPYRIGHT © 2015 CALLISON

11/9/2015 1:44:09 PM
C:\Revit Models\2015\TOPOCK-8_S_v2015_CENTRAL_Ranstyl.rvt
N1808

ROOF DIAPHRAGM NAILING SCHEDULE											
(ALL VALUES ARE BASED ON IBC 2012 FOR STRUCTURAL PANEL DIAPHRAGMS WITH FRAMING OF DOUGLAS-FIR-LARCH)											
LOCATION	SHEATHING THICKNESS (IN)	BLKG REQD	LINES OF FASTENERS (#)	SIZE OF FASTENER	DIAPHRAGM BOUNDARIES AND CONTINUOUS PANEL EDGES		ALL OTHER PANEL EDGES		FASTENER SPACING AT INTERMEDIATE FRAMING MEMBERS	ALLOWABLE SHEAR (LBS/FT)	
					FRAMING WIDTH*	FASTENER SPACING	FRAMING WIDTH*	FASTENER SPACING		SEISMIC	WIND
ROOF	19/32	NO	1	10d	2x	6" OC	2x	6" OC	12" OC	300	215
* FRAMING WIDTHS INDICATED ARE NORMAL											

NOTES:
1. ALL DIAPHRAGM SHEATHING IS TO BE STAGGERED IN DIRECTION OF PLYWOOD SPAN.
2. AS SHOWN IN ADJACENT DETAIL, BOUNDARY NAILING SHALL OCCUR ALONG ENTIRE LINE OF SHEAR WALLS. ALSO, PROVIDE BOUNDARY NAILING AT ALL CHORD AND COLLECT ELEMENTS UNO.
3. NAILING SHALL BE HOT-DIPPED GALVANIZED AT PRESSURE-TREADED AND FIRE-TREATED FRAMING.

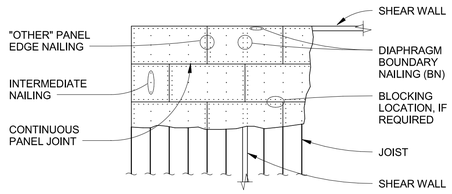

PLAN

1 ROOF DIAPHRAGM NAILING SCHEDULE

1" = 1'-0"

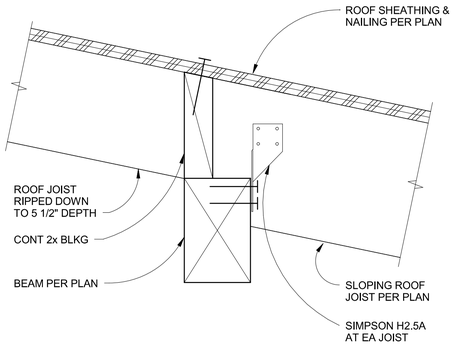

9 SECTION

3" = 1'-0"

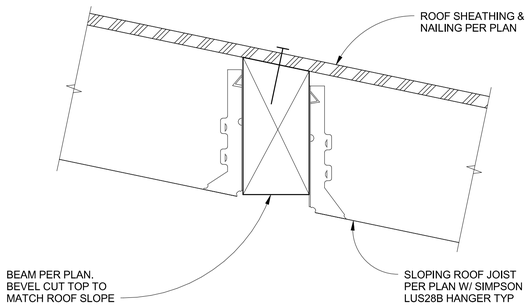

10 SECTION

3" = 1'-0"

kpff
1601 5th Avenue, Suite 1600
Seattle, WA 98101
206.622.5822
www.kpff.com

ARCADIS

NO.	DATE	DESCRIPTION	GM/SPEC	DWN	CHKD	SUPV	APVD BY
0	11/18/2015	FINAL DESIGN		JBB	AMR	AWE	RAO

REVISIONS

APPROVED BY	
RAO	

SO	
SUPV	AWE
DSGN	AMR
DWN	JBB
CHKD	AMR
OK	
DATE	11/18/15
SCALES	As indicated

TOPOCK GROUNDWATER REMEDIATION PROJECT
OPERATION BUILDING (BUILDING 8)
Steel and Wood Details
GAS TRANSMISSION & DISTRIBUTION
PACIFIC GAS AND ELECTRIC COMPANY
SAN FRANCISCO, CALIFORNIA

- FINAL DESIGN - FOR AGENCY APPROVAL ONLY

REGISTERED PROFESSIONAL ENGINEER
CRAIG D. OLSEN
No. S-3905
Exp.06/30/17
STRUCTURAL
STATE OF CALIFORNIA
11/18/15

MICROFILM	
BILL OF MATL	
DWG LIST	
SUPSDS	
SUPSD BY	
SHEET NO.	of SHEETS
S-08-12	REV 0

006-151658.00

COPYRIGHT © 2015 CALLISON

N1808

C:\Revit Models\2015\TOPOCK-8_S_v2015_CENTRAL_Sandy.rvt 11/9/2015 1:44:09 PM

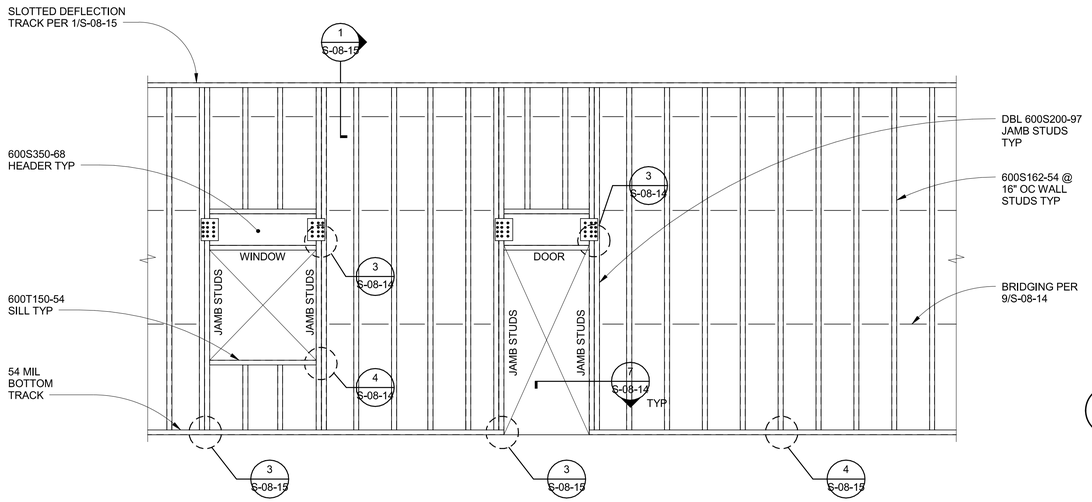

WINDOW OPENINGS | DOOR OPENINGS | TYPICAL

MILS	GAUGE	MINIMUM THICKNESS
33	20	0.0346"
43	18	0.0451"
54	16	0.0566"
68	14	0.0713"
97	12	0.1017"

NOTES:
1. ALL WELDS SHALL BE FILLET 1/8" MAXIMUM. EFFECTIVE THROAT SHALL NOT BE LESS THAN THINNEST MATERIAL FOR WALLS THINNER THAN 0.15". WELDS SHALL BE IN ACCORDANCE TO "STRUCTURAL WELDING CODE - SHEET METAL" AWS D1.3.
2. PUNCHOUTS SHALL BE SPACED @ 24" OC MINIMUM AND THE FIRST PUNCHOUT SHALL BE 10" MINIMUM FROM END OF STUD.
3. FOR TYPICAL METAL STUD CORNER FRAMING, SEE 8/S-08-14.
4. SCREWS SHALL BE INSTALLED PER MANUFACTURER'S RECOMMENDATION. THREAD-FORMING OR THREAD-CUTTING SCREWS SHALL BE USED AND SPACED A MINIMUM OF (3) SCREW DIAMETERS. ENGAGE (3) THREADS, MINIMUM.

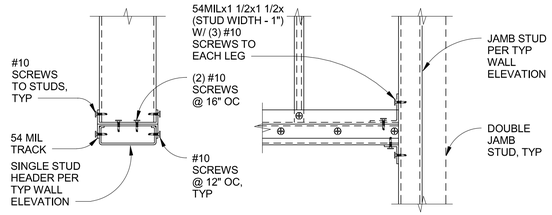

SINGLE STUD HEADER | SINGLE STUD HEADER JAMB CONNECTION

3 TYP EXTERIOR NON-BEARING WALL HEADER
1 1/2" = 1'-0"

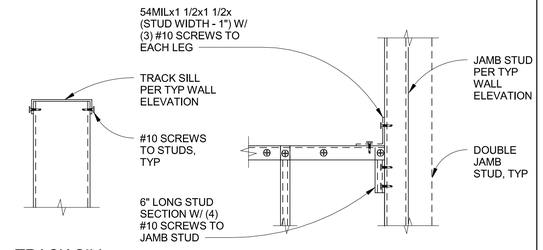

TRACK SILL | TRACK SILL JAMB CONNECTION

4 TYP EXTERIOR NON-BEARING WALL SILL
1 1/2" = 1'-0"

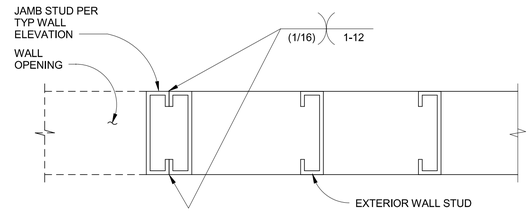

DOUBLE JAMB STUD

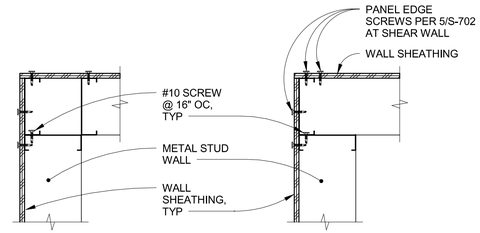

INTERIOR WALL CORNER | EXTERIOR WALL CORNER

5 TYPICAL EXTERIOR NON-BEARING STUD WALL ELEVATION
1/2" = 1'-0"

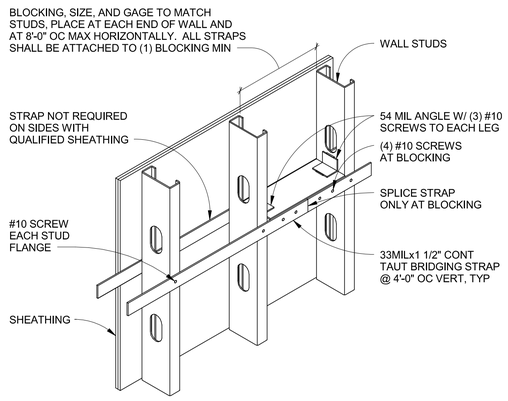

TYPE 1 BRIDGING - STRAP

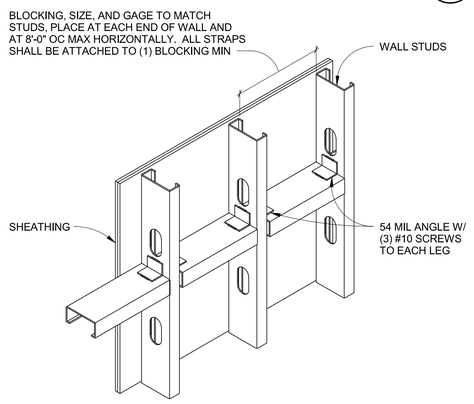

TYPE 2 BRIDGING - BLOCKING

7 TYP EXTERIOR NON-BEARING WALL JAMB STUD
1 1/2" = 1'-0"

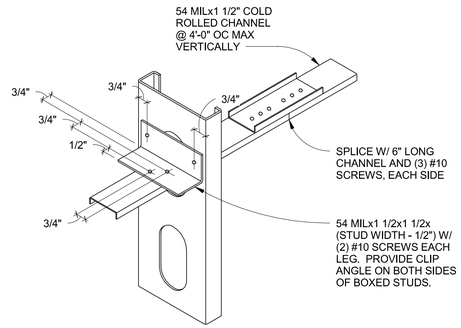

TYPE 3 BRIDGING - COLD ROLLED

NOTES:
1. AT THE CONTRACTOR'S OPTION TYPE 1, 2, OR 3 BRIDGING MAY BE USED.
2. QUALIFIED SHEATHING SHALL BE CONSIDERED TO BE FULL HEIGHT GWB, PLYWOOD OR OSB ONLY.
3. TYPE 3 BRIDGING IS NOT ALLOWED AT STUDS WIDER THAN 6".

8 TYPICAL CORNER
1 1/2" = 1'-0"

9 TYPICAL NON-BEARING EXTERIOR STUD WALL BRIDGING
1 1/2" = 1'-0"

- FINAL DESIGN - FOR AGENCY APPROVAL ONLY

REGISTERED PROFESSIONAL ENGINEER CRAIG D. OLSEN No. S-3909 Exp.06/30/16 STRUCTURAL STATE OF CALIFORNIA 11/18/15

kpff
1601 5th Avenue, Suite 1600
Seattle, WA 98101
206.622.5822
www.kpff.com

ARCADIS

NO.	DATE	DESCRIPTION	GM/SPEC	DWN	CHKD	SUPV	APVD BY
0	11/18/2015	FINAL DESIGN		JBB	AMR	AWE	RAO

REVISIONS

APPROVED BY	
RAO	

SO		
SUPV	AWE	
DSGN	AMR	
DWN	JBB	
CHKD	AMR	
OK		
DATE	11/18/15	
SCALES	As indicated	

TOPOCK GROUNDWATER REMEDIATION PROJECT
OPERATION BUILDING
(BUILDING 8)
Typical Cold - Formed Details
GAS TRANSMISSION & DISTRIBUTION
PACIFIC GAS AND ELECTRIC COMPANY
SAN FRANCISCO, CALIFORNIA

MICROFILM	
BILL OF MATL	
DWG LIST	
SUPSDS	
SUPSD BY	
SHEET NO.	of SHEETS
S-08-14	REV 0

N1808

006-151658.00

COPYRIGHT © 2015 CALLISON

C:\Revit Models\2015\TOPOCK-8_S_v2015_CENTRAL_Sandy.rvt
11/9/2015 1:44:10 PM

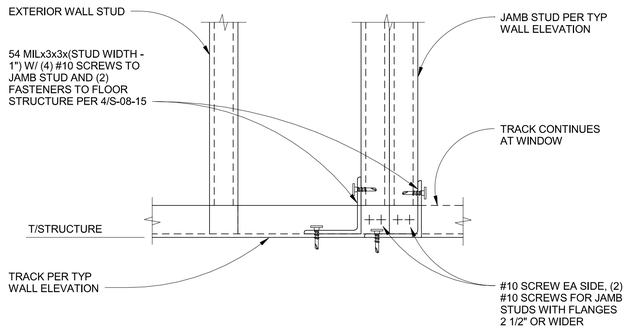

3 TYPICAL JAMB STUD AT BOTTOM TRACK

3" = 1'-0"

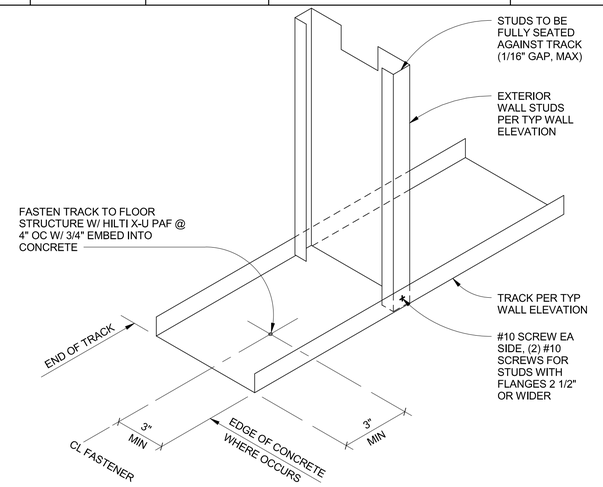

4 TYPICAL EXTERIOR NON-BEARING WALL BOTTOM TRACK DETAIL

1 1/2" = 1'-0"

SHEAR WALL SCHEDULE (2012 IBC)								
WALL TYPE	SHEATHING TYPE	MINIMUM STUD THICKNESS	TOP AND BOTTOM TRACK	SHEATHING FASTENER	SCREW SPACING AT PANEL EDGES	TOP AND BOTTOM TRACK ATTACHMENT		SHEAR CAPACITY (PLF)
						TO LIGHT-GAGE TRACK	TO CONCRETE	
SB-6	SUREBOARD SERIES 200	S162-43	T200-54	SEE NOTE 4	6" OC	#8 @ 5" OC	PER 9/S-08-15	562
SB-4	SUREBOARD SERIES 200	S162-43	T200-54	SEE NOTE 4	4" OC	#8 @ 3" OC	PER 9/S-08-15	770
SM-4	0.027" SHEET STEEL	S162-43	T200-54	#8	4" OC	#8 @ 6" OC	PER 9/S-08-15	400

NOTES:
1. PROVIDE BRIDGING AT ALL SHEAR WALLS PER 9/S-08-14.
2. FOR STUD ATTACHMENT TO BOTTOM TRACK REFERENCE 4/S-08-15.
3. INSTALL "SUREBOARD" PANELS VERTICALLY (PARALLEL TO STUDS).
4. ATTACH "SURE-BOARD" TO COLD-FORMED STEEL FRAMING WITH #6x1 1/4" SELF-DRILLING 3/4" LONG DRILL TIP BUGLE HEAD SCREWS (MINIMUM SHANK Ø = 0.138". MINIMUM HEAD DIAMETER = 0.3145"). SCREW FASTENER HEAD MUST BE FLUSH WITH PANEL SURFACE AND PENETRATE INTO THE COLD-FORMED STEEL FRAMING MEMBER A MINIMUM OF (3) EXPOSED THREADS. INSTALL FASTENER WITH A MINIMUM 3/8" EDGE DISTANCE.
5. PROVIDE FASTENERS @ 12" OC ALONG INTERMEDIATE FRAMING MEMBERS.
6. FOR EMBED PLATE DETAIL, REFERENCE 9/S-08-15.
7. SHEAR CAPACITY VALUES ARE ASD VALUES FOR SEISMIC AND WIND.

5 COLD-FORMED SHEAR WALL SCHEDULE

1 1/2" = 1'-0"

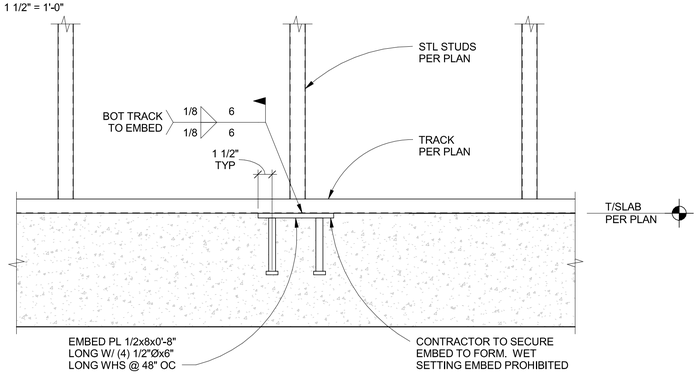

9 TYPICAL SHEAR WALL TO CONCRETE SLAB CONNECTION

1 1/2" = 1'-0"

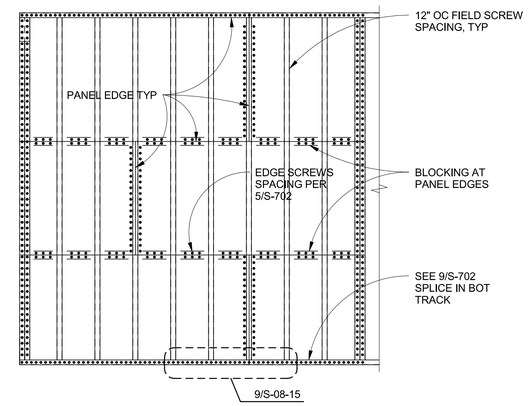

8 TYPICAL COLD-FORMED SHEAR WALL FASTENING

1/2" = 1'-0"

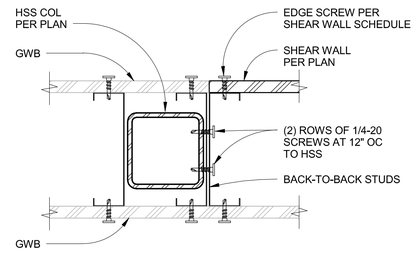

12 TYP SHEAR WALL TO HSS COL CONN'N

3" = 1'-0"

- FINAL DESIGN - FOR AGENCY APPROVAL ONLY

REGISTERED PROFESSIONAL ENGINEER CRAIG D. OLSEN No. S 3967 Exp.06/30/16 STRUCTURAL STATE OF CALIFORNIA 11/18/15

kpff
1601 5th Avenue, Suite 1600
Seattle, WA 98101
206.622.5822
www.kpff.com

ARCADIS

NO.	DATE	DESCRIPTION	GM/SPEC	DWN	CHKD	SUPV	APVD BY
		REVISIONS					
0	11/18/2015	FINAL DESIGN	JBB	AMR	AWE	RAO	
		REVISIONS					

APPROVED BY		
RAO	SO	
	SUPV	AWE
	DSGN	AMR
	DWN	JBB
	CHKD	AMR
	OK	
	DATE	11/18/15
	SCALES	As indicated

TOPOCK GROUNDWATER REMEDIATION PROJECT
OPERATION BUILDING
(BUILDING 8)
Typical Cold - Formed Details
GAS TRANSMISSION & DISTRIBUTION
PACIFIC GAS AND ELECTRIC COMPANY
SAN FRANCISCO, CALIFORNIA

MICROFILM	
BILL OF MATL	
DWG LIST	
SUPSDS	
SUPSD BY	
SHEET NO.	of SHEETS
S-08-15	REV 0

006-151658.00

COPYRIGHT © 2015 CALLISON

11/6/2015 1:44:11 PM

C:\Revit Models\2015\TOPOCK-8_S_v2015_CENTRAL_Randyf.rvt

N1808

MECHANICAL ABBREVIATIONS

AAT	AMBIENT AIR TEMPERATURE
AAV	AUTOMATIC AIR VENT
ABAND	ABANDONED
A/C	AIR CONDITIONING
ACCEPT.	ACCEPTANCE
ACU	AIR CONDITIONING UNIT
A/D	ACCESS DOOR
ADJ	ADJUSTABLE
A/E	ARCHITECT / ENGINEER
AF	AIRFOIL
AFF	ABOVE FINISHED FLOOR
AHJ	AUTHORITY HAVING JURISDICTION
AHU	AIR HANDLING UNIT
A/L	ACOUSTICALLY LINED
APPROX	APPROXIMATE
ARCH	ARCHITECTURAL / ARCHITECT
AS	AIR SEPARATOR
ATM	ATMOSPHERE
BAS	BUILDING AUTOMATION SYSTEM
B/D	BACKDRAFT DAMPER
BF	BLIND FLANGE
BHP	BRAKE HORSEPOWER
BI	BACKWARD INCLINED
BLDG.	BUILDING
BTU	BRITISH THERMAL UNIT
BTUH	BRITISH THERMAL UNITS PER HOUR
CA	COMPRESSED AIR
CAB	CABINET
CAP	PIPE/DUCT CAP
CAP.	CAPACITY
CENTRIF	CENTRIFUGAL
CO_2	CARBON DIOXIDE
CC	COOLING COIL
CD	CONDENSATE DRAIN
CFM	CUBIC FEET PER MINUTE
CH	CHILLER
CHBT	CHILLED WATER BUFFER TANK
CHWP	CHILLED WATER PUMP
CHWR	CHILLED WATER RETURN
CHWS	CHILLED WATER SUPPLY
CHS&R	CHILLED WATER SUPPLY & RETURN
CHW	CHILLED WATER
CHWST	CHILLED WATER STORAGE TANK
CLG	CEILING
CMU	CONCRETE MASONRY UNIT
C.O.	CLEANOUT
COEFF	COEFFICIENT
COMM	COMMUNICATION
CONN	CONNECTION
CONT.	CONTINUATION
CP	CONDENSATE PUMP
CR	CONDENSER WATER RETURN
CRAH	COMPUTER ROOM AIR HANDLING UNIT
CS	CONDENSER WATER SUPPLY
CV	CONTROL VALVE
CW	CITY WATER
DB	DRY BULB
DCW	DOMESTIC COLD WATER
DEG	DEGREES
DEMO	DEMOLITION
DESIG	DESIGNATION
DET	DETAIL
DIA, ⌀	DIAMETER
DIFF	DIFFUSER
DN	DOWN
DR	DRAIN
DWG	DRAWING
DX	DIRECT EXPANSION
EA	EXHAUST AIR, EACH
EAT	ENTERING AIR TEMPERATURE
EDH	ELECTRIC DUCT HEATER
EF	EXHAUST FAN
EFF	EFFICIENCY
E.G.	FOR EXAMPLE
EL	ELEVATION
ELEC	ELECTRIC / ELECTRICAL
ESP	EXTERNAL STATIC PRESSURE
ET	EXPANSION TANK
EWT	ENTERING WATER TEMPERATURE
EXH	EXHAUST
(E)	EXISTING
EXP	EXPANSION
F	FIRE PROTECTION WATER SUPPLY
FC	FORWARD CURVED
FCU	FAN COIL UNIT
F/D	FIRE DAMPER
FDC	FIRE DEPARTMENT CONNECTION
FDR	FLOOR DRAIN
FF	FINISHED FLOOR
FFP	FUEL OIL FILL PORT
FFS	FUEL OIL FILTRATION SYSTEM
FMF	FLOW METER FITTING
FLEX	FLEXIBLE
FO	FUEL OIL
FOP	FUEL OIL PUMP
FOR	FUEL OIL RETURN
FOS	FUEL OIL SUPPLY
FOV	FUEL OIL VENT
FPM	FEET PER MINUTE
FPS	FEET PER SECOND
FPTU	FAN POWERED TERMINAL UNIT
FST	FUEL OIL STORAGE TANK
FT	FEET
FTR	FINNED TUBE RADIATION
FT WG	FEET (WATER GAUGE)
FW	FRESH WATER
G	GENERATOR
GLV	GALVANIZED
GPH	GALLONS PER HOUR
GPM	GALLONS PER MINUTE
GR	GRILLE
H	HUMIDIFIER
HC	HEATING COIL
HDP	HIGH DENSITY PUMPING UNIT
HED	HOSE-END DRAIN
HORIZ	HORIZONTAL
HP	HORSEPOWER
HPR	HIGH PRESSURE CONDENSATE RETURN
HPS	HIGH PRESSURE STEAM
HR	HOUR
HGT	HEIGHT
HTR	HEATER
HW	HEATING WATER
HWP	HEATING WATER PUMP
HWR	HEATING WATER RETURN
HWS	HEATING WATER SUPPLY
HWS&R	HEATING WATER SUPPLY & RETURN
HX	HEAT EXCHANGER
HZ	HERTZ
IN.	INCHES
IND	INDEPENDENT
IN. WG	INCHES (WATER GAUGE)
IPLV	INTEGRATED PART LOAD VALUE
IPS	IRON PIPE SIZE
IU	INDOOR UNIT (VRV HEAT PUMP SYSTEM)
KW	KILOWATTS
L	LONG / LENGTH
LAT	LEAVING AIR TEMPERATURE
LD	LINER DIFFUSER
LF	LINEAR FEET
LPR	LOW PRESSURE CONDENSATE RETURN
LPS	LOW PRESSURE CONDENSATE SUPPLY
LWT	LEAVING WATER TEMPERATURE
MA	MIXED AIR
MAV	MANUAL AIR VENT
MAX	MAXIMUM
MBH	THOUSANDS OF BTUs PER HOUR
MECH	MECHANICAL
MEZZ	MEZZANINE
MFG	MANUFACTURER
MIN	MINIMUM
M/D	MOTOR OPERATED DAMPER
MPR	MEDIUM PRESSURE CONDENSATE RETURN
MPS	MEDIUM PRESSURE CONDENSATE SUPPLY
N/A	NOT APPLICABLE
NC	NOISE CRITERIA
N.O.	NORMALLY CLOSED
NIC	NOT IN CONTRACT
N.F.C.	NOT FOR CONSTRUCTION
N.O.	NORMALLY OPEN
NPLV	NON-STANDARD PART LOAD VALUE
NPSHR	NET POSITIVE SUCTION HEAD REQUIRED
NPW	NON-POTABLE WATER
NTS	NOT TO SCALE
OA	OUTSIDE AIR
OD	OUTSIDE DIAMETER
OED	OPEN END DUCT
OEP	OPEN END PIPE
OU	OUTDOOR UNIT (VRV HEAT PUMP SYSTEM)
P	PUMP
P&ID	PROCESS & INSTRUMENTATION DIAGRAM
PC	PUMPED CONDENSATE RETURN
PCHW	PRIMARY CHILLED WATER
PCWR	PRIMARY CHILLED WATER RETURN
PCWS	PRIMARY CHILLED WATER SUPPLY
PCWS&R	PRIMARY CHILLED WATER SUPPLY & RETURN
PD	PRESSURE DROP
PIV	POST INDICATOR VALVE
PW	POTABLE WATER
PRESS	PRESSURE
PRV	PRESSURE REGULATING VALVE
PSI	POUNDS PER SQUARE INCH
P/T	PRESSURE/TEMPERATURE PORT
PTRV	PRESSURE/TEMPERATURE RELIEF VALVE
QTY	QUANTITY
R-12	REFRIGERANT TYPE (123, 134A, ETC.)
RA	RETURN AIR
RAD	RADIUS
RAF	RAISED ACCESS FLOOR
REFRIG	REFRIGERANT
REG	REGISTER
RET	RETURN
REV	REVOLUTIONS
RF	RETURN FAN
RH	ROOF HOOD, RELATIVE HUMIDITY
RL	REFRIGERANT LIQUID
RM	ROOM
RPM	REVOLUTIONS PER MINUTE
RPP	REDUCED PRESSURE PRINCIPLE
RS	REFRIGERANT SUCTION
RV	RELIEF VALVE
SA	SUPPLY AIR
SAD	SOUND ATTENUATING DEVICE
SAN	SANITARY WASTE (PIPE)
SCH	SCHEDULE
SCHW	SECONDARY CHILLED WATER
SCWR	SECONDARY CHILLED WATER RETURN
SCWS	SECONDARY CHILLED WATER SUPPLY
S/D	SMOKE DAMPER
SE	SMOKE EXHAUST
SENS	SENSIBLE
SF	SHOT FEEDER
S/F	COMBINATION SMOKE/FIRE DAMPER
SH	SENSIBLE HEAT
SQ	SQUARE
SP	STATIC PRESSURE
SUP	SUPPLY
TDH	TOTAL DYNAMIC HEAD
TDV	TRIPLE DUTY VALVE
TEMP	TEMPERATURE
THK	THICK
TONS	TONS OF REFRIGERATION
TSP	TOTAL STATIC PRESSURE
TU	TERMINAL UNIT
TYP	TYPICAL
UH	UNIT HEATER
UL	UNDERWRITERS LABORATORIES
V	VOLTS
VA	VOLT-AMPERE
VAC	VACUUM AIR
VAV	VARIABLE AIR VOLUME
V/D	VOLUME DAMPER (MANUAL)
VEL	VELOCITY
VERT	VERTICAL
VT	VENT
VTR	VENT THRU ROOF
W	WIDE / WIDTH, WATTS
WB	WET BULB
WTR	WATER
W/	WITH
dBA	DECIBELS (A-WEIGHTED)
@	AT
°C	DEGREES CELSIUS
°F	DEGREES FAHRENHEIT
ϕ	ELECTRICAL PHASE
%	PERCENT
ΔP	PRESSURE DROP
#	NUMBER / QUANTITY

NOTE:
NOT ALL ABBREVIATIONS & SYMBOLS MAY BE USED

SINGLE-LINE PIPING ELEMENTS

- FLOW ARROW
- PIPE CAP
- FLANGE PAIR
- BLIND FLANGED PIPE
- ELBOW TURNED UP
- ELBOW TURNED DN
- BOTTOM BRANCH CONNECTION
- TOP BRANCH CONNECTION
- SIDE BRANCH CONNECTION
- PIPE RISE/DROP AT 45°
- REDUCER (CONCENTRIC)
- REDUCER (ECCENTRIC)
- UNION
- BUTTERFLY VALVE
- PLUG VALVE
- BALANCING VALVE
- BALL VALVE
- BALL VALVE (LOCKABLE)
- GLOBE VALVE
- GATE VALVE
- PRESSURE REDUCING/REGULATING VALVE
- CONTROL VALVE (3-WAY)
- CONTROL VALVE (2-WAY)
- PRESSURE INDEPENDENT CONTROL VALVE
- MANUAL VALVE IN VERTICAL
- CONTROL VALVE IN VERTICAL
- STRAINER
- STRAINER W/ BLOWDOWN VALVE
- CHECK VALVE
- BACKFLOW PREVENTER
- AUTOMATIC AIR VENT
- MANUAL AIR VENT
- VACUUM BREAKER
- PRESSURE/TEMPERATURE TEST PORT
- CORROSION COUPON
- PRESSURE GAGE W/ BALL VALVE
- PRESS GAGE W/ BALL VALVE & SIPHON
- TEMPERATURE GAGE
- TOTALIZING FLOWMETER
- FLOWMETER
- HOSE BIBB
- SUCTION DIFFUSER
- FLEXIBLE CONNECTION
- RELIEF VALVE
- STEAM TRAP ASSEMBLY
- EXPANSION JOINT
- PIPE ANCHOR
- PIPE GUIDE
- EXPANSION LOOP
- DIFFERENTIAL PRESSURE TRANSMITTER
- FIRE DEPARTMENT CONNECTION
- DUPLEX BASKET STRAINER
- TRIPLE DUTY VALVE
- FLOW METER FITTING
- MOTORIZED BUTTERFLY VALVE

DOUBLE-LINE PIPING ELEMENTS

- PIPE CONTINUATION
- TEE FITTING
- ELBOW
- REDUCER (CONCENTRIC)
- FLANGE (WELD NECK)
- BUTTERFLY VALVE
- CHECK VALVE (SILENT GLOBE TYPE)

DUCTWORK ELEMENTS

- SECTION THROUGH OUTSIDE AIR DUCT
- SECTION THROUGH RETURN OR EXHAUST AIR DUCTWORK
- SECTION THROUGH SUPPLY AIR DUCT
- DUCTWORK
- AIR MONITOR STATION
- ACOUSTICALLY LINED DUCT
- DAMPER, FIRE
- DAMPER, MANUAL VOLUME
- DAMPER, MOTOR OPERATED
- DAMPER, SMOKE/FIRE, MOTOR OPERATED
- DAMPER, SMOKE, AUTOMATICALLY OPERATED
- INCLINED DROP IN DIRECTION OF ARROW
- INCLINED RISE IN DIRECTION OF ARROW
- STATIC PRESSURE CONTROLLER
- SOUND ATTENUATOR
- TRANSITION, RECTANGULAR TO ROUND
- FLEXIBLE CONNECTION
- FLEXIBLE CONNECTOR
- FAN POWERED TERMINAL UNIT
- TRANSITION, RECTANGULAR
- SPIN-IN COLLAR
- SPIN-IN COLLAR WITH DAMPER
- AIR HANDLING BOOT (FLOURESCENT LIGHT)
- AIR HANDLING SLOT DIFFUSER
- CEILING SUPPLY AIR DIFFUSER
- LINEAR DIFFUSER (DASHES INDICATE INACTIVE BLANKED-OFF PORTIONS) AS INDICATED ON DRAWINGS
- SIDEWALL SUPPLY AIR REGISTER
- ELBOW TURNED DOWN
- ELBOW TURNED UP
- ELBOW, RADIUS TYPE
- ELBOW, WITH AIRFOIL TURNING VANES
- RETURN OR EXHAUST AIR DUCT
- CEILING RETURN OR EXHAUST AIR REGISTER
- SIDEWALL RETURN AIR REGISTER
- OPEN END DUCT

MISCELLANEOUS

- NEW WORK (HEAVY LINE - SOLID)
- DEMOLITION WORK (HEAVY LINE - DASHED)
- EXISTING WORK (LIGHT LINE)
- PIPE OR DUCT CONTINUATION
- REMOVE FROM EXISTING
- CONNECT TO EXISTING
- FLOOR DRAIN
- W"xH" RECTANGULAR DUCT DIMENSIONS
- W"/H" FLAT OVAL DUCT DIMENSIONS

CONTROL SYMBOLS

- ALM GENERAL ALARM
- AMS AIRFLOW MONITORING STATION
- AVA AUDIBLE / VISUAL ALARM
- BBS BIDIRECTIONAL BLEED SENSOR
- CDS CARBON DIOXIDE SENSOR
- CS CURRENT SWITCH
- DA DAMPER ACTUATOR
- DPS DIFFERENTIAL PRESSURE SWITCH
- DPT DIFFERENTIAL PRESSURE TRANSMITTER
- ES END SWITCH
- FM FLOWMETER
- FS FLOW SWITCH
- FZ FREEZESTAT
- HHL HIGH HIGH LEVEL
- HHS HIGH HUMIDITY SWITCH
- HL HIGH LEVEL
- HSP HIGH SPEED
- HT HUMIDITY TRANSMITTER
- LD LEAK DETECTION
- LI LEVEL INDICATION
- LL LOW LEVEL
- LLL LOW LOW LEVEL
- LSP LOW SPEED
- POT POSITION TRANSMITTER
- PT PRESSURE TRANSMITTER
- RES TEMPERATURE RESET
- RUN RUN STATUS
- SD SMOKE DETECTOR
- SPT STATIC PRESSURE TRANSMITTER
- SS START/STOP
- TT TEMPERATURE TRANSMITTER
- TUC TERMINAL UNIT CONTROLLER
- VA VALVE ACTUATOR
- VFD VARIABLE FREQUENCY DRIVE
- WD WATER DETECTION
- (AI) ANALOG INPUT
- (AO) ANALOG OUTPUT
- (DI) DIGITAL INPUT
- (DO) DIGITAL OUTPUT

HVAC ELEMENTS

- (H) HUMIDISTAT
- (T) THERMOSTAT
- (S) SMOKE DETECTOR
- [H] HUMIDITY SENSOR
- [C] CARBON DIOXIDE SENSOR
- [R] REFRIGERANT SENSOR
- [H] HYDROGEN SENSOR
- [SP] STATIC PRESSURE SENSOR
- [T] TEMPERATURE SENSOR
- [LCP] LOCAL CONTROL PANEL
- [PUR] CLEAN AGENT PURGE SWITCH
- [EAS] EMERGENCY AIR DISTRIBUTION SHUT-OFF SWITCH

GENERAL MECHANICAL NOTES

1. PLANNING AND CHECKING HAS BEEN DONE BY THE ENGINEER TO MINIMIZE INTERFERENCES. PRIOR TO START OF CONSTRUCTION, CONTRACTOR SHALL FIELD VERIFY EXACT LOCATION AND SIZES OF ALL ELEMENTS RELATED TO THE WORK. ROUTING OF PIPING AND DUCTWORK SHOWN ON DRAWINGS IS DIAGRAMMATIC. CONTRACTOR SHALL ASCERTAIN THAT INTERFERENCES WILL NOT BE ENCOUNTERED, PREVENTING THE DISASSEMBLY OF PARTIALLY OR COMPLETELY ERECTED SYSTEMS FOR RE-ROUTING TO CLEAR OBSTRUCTIONS WHICH MAY EXIST.
2. CONTRACTOR SHALL COORDINATE DUCTWORK, CONDUIT AND PIPING INSTALLATIONS WITH LIGHT FIXTURES AND PROVIDE ADDITIONAL RISERS, DROPS AND OFFSETS AS REQUIRED, IF INSTALLED PROPOSED WORK WHICH ARE IN CONFLICT WITH ARCHITECTURAL OR MEP ELEMENTS WHICH ARE SHOWN ON THE DRAWINGS, THEY SHALL BE RELOCATED WITHOUT ADDITIONAL COST.
3. ALL CONSTRUCTION DEBRIS SHALL BE REMOVED AND THE AREA OF WORK SHALL BE LEFT IN CLEAN CONDITION. CONTRACTOR SHALL THOROUGHLY CLEAN WITH SOAP AND WATER ALL AIR DEVICES AFTER CONSTRUCTION.
4. WORK INDICATED THAT PENETRATES FLOOR OR ROOF SLABS OR WALLS SHALL BE COORDINATED WITH STRUCTURAL OR ARCHITECTURAL OPENINGS PROVIDED.
5. ALL PIPE SIZES SHOWN ARE NOMINAL SIZES.
6. NOMINAL SIZE 2" AND SMALLER PIPING SHALL BE FIELD ROUTED IN ACCORDANCE WITH APPROPRIATE ENGINEERING PRACTICES, INDUSTRY STANDARDS, AND GOVERNING CODES/REGULATIONS. ROUTE OF PIPE, INCLUDING CLEARANCE, IS THE RESPONSIBILITY OF THE CONTRACTOR. UNIONS, BUSHINGS, AND REDUCING INSERTS, NOT SHOWN ON THE DRAWINGS, BUT REQUIRED FOR INSTALLATION, SHALL BE PROVIDED BY THE CONTRACTOR.
7. CONTRACTOR SHALL PROVIDE LOW POINT HOSE END PIPE DRAINS AS REQUIRED TO COMPLETELY DRAIN ALL NEW WORK SYSTEMS. CONTRACTOR SHALL PROVIDE MANUAL AIR VENTS AT HIGH POINTS IN ALL NEW WORK SYSTEMS (PROVIDE AUTOMATIC AIR VENTS WHERE NOTED IN DRAWINGS).
8. ALL DUCTWORK DIMENSIONS SHOWN ARE CLEAR INSIDE DIMENSIONS.
9. FLEXIBLE DUCTWORK SHALL NOT EXCEED 5'-0" IN LENGTH.
10. ELECTRICAL CONTRACTOR TO PROVIDE AND INSTALL ALL LINE VOLTAGE WIRING AND CONDUIT. TEMPERATURE CONTROLS CONTRACTOR TO PROVIDE AND INSTALL ALL LOW VOLTAGE (24V) WIRING AND ALL ASSOCIATED STEP-DOWN TRANSFORMERS WHEN REQUIRED.
11. CONDENSATE DRAIN PIPING SHALL BE SLOPED AT A MINIMUM OF $\frac{1}{8}$" PER FOOT.
12. DASHED LINES AROUND MECHANICAL EQUIPMENT REPRESENT SERVICE/MAINTENANCE CLEARANCE AREAS. DUCTWORK, PIPING, ETC, SHALL NOT BE INSTALLED WITHIN THIS AREA. COORDINATE FINAL DIMENSIONS OF CLEARANCE AREA WITH MANUFACTURER'S RECOMMENDATIONS.

- FINAL DESIGN - FOR AGENCY APPROVAL ONLY

REGISTERED PROFESSIONAL ENGINEER — AMARJEE P. SINGH — No. M-37414 Exp. 06/30/17 — MECHANICAL — STATE OF CALIFORNIA
11/11/2015

CALLISONRTKL A DESIGN CONSULTANCY OF ARCADIS
ARCADIS

NO.	DATE	DESCRIPTION	GM/SPEC	DWN	CHKD	SUPV	APVD BY
1	11/18/2015	FINAL DESIGN		JMH	HS	HS	RAO

REVISIONS

APPROVED BY: RAO

SO	
SUPV	HS
DSGN	Author
DWN	Author
CHKD	Checker
OK	
DATE	11/18/2015
SCALES	12" = 1'-0"

TOPOCK GROUNDWATER REMEDIATION PROJECT
OPERATION BUILDING (BUILDING 8)

MECH LEGEND, ABBREVIATIONS & NOTES
GAS TRANSMISSION & DISTRIBUTION
PACIFIC GAS AND ELECTRIC COMPANY
SAN FRANCISCO, CALIFORNIA

MICROFILM | BILL OF MATL | DWG LIST | SUPSDS | SUPSD BY

SHEET NO. of SHEETS: M-08-00 | REV 0

Project Number

COPYRIGHT © 2015 CALLISON

N1808

C:\Users\jhannan\Documents\TOPOCK-8 MECHANICAL-CENTRAL_jhannan.rvt
11/12/2015 5:51:44 PM

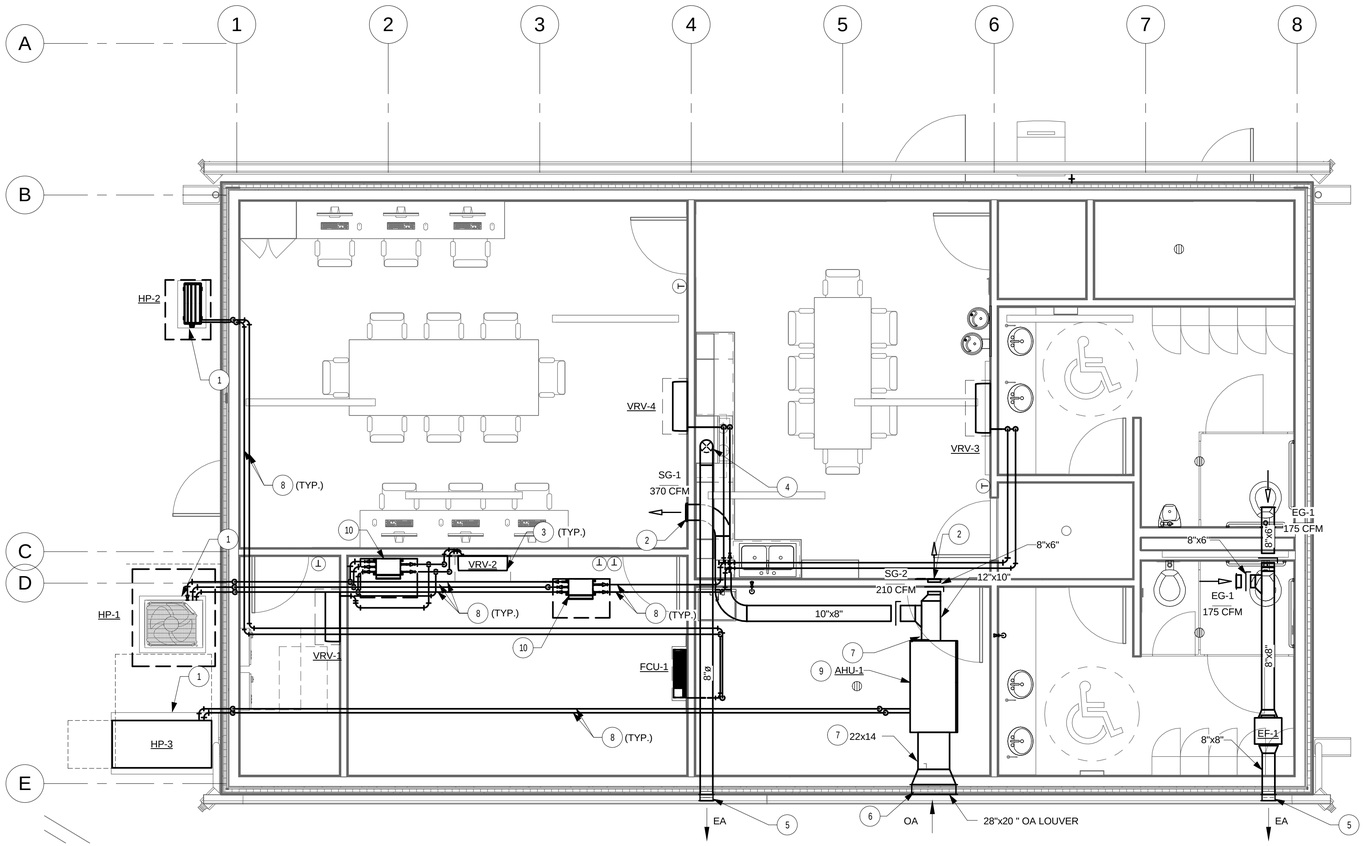

DRAWING NOTES:

1. PROVIDE 6" CONCRETE PAD FOR EQUIPMENT. EQUIPMENT SHALL BE ANCHORED TO THE PAD.
2. WALL MOUNTED SUPPLY GRILLE. MOUNT APPROXIMATELY 8'-3" AFF. COORDINATE FINAL LOCATION WITH ARCHITECTURAL DIVISION.
3. MOUNT WALL MOUNTED VRV UNIT APPROXIMATELY 9'-0" AFF. COORDINATE FINAL LOCATION WITH ARCHITECTURAL DIVISION. UNIT SHALL BE SEISMICALLY RESTRAINED.
4. CONNECT EXHAUST DUCT TO OWNER FURNISHED STOVE HOOD. REFER TO ARCHITECTURAL DIVISION FOR ADDITIONAL INFORMATION.
5. PROVIDE ALUMINUM HOODED WALL CAP, GREENHECK, MODEL WC, OR APPROVED EQUAL, WITH BIRD SCREEN. MOUNT APPROXIMATELY 10'-0" AFF.
6. OUTSIDE AIR LOUVER OF SIZE INDICATED (MIN. 50% FREE AREA) WITH BIRD SCREEN. REFER TO ARCHITECTURAL DIVISION FOR ADDITIONAL INFORMATION. MOUNT APPROXIMATELY 7'-9" AFF.
7. COORDINATE INLET/OUTLET DUCT SIZE WITH VRV UNIT MANUFACTURER.
8. REFRIGERANT PIPING. CONTRACTOR SHALL SIZE PER MANUFACTURER'S RECOMMENDATIONS. PROVIDE BRANCH PIPING KITS AS REQUIRED PER MANUFACTURER'S RECOMMENDATIONS.
9. PROVIDE SEISMIC RESTRAINTS FOR AHU.
10. PROVIDE BRANCH SELECTOR BOX (DAKIN BSQ36TVJ) RATED FOR 208V/1PH, 0.1 MCA.

SCALE: 1/4" = 1'-0"
AT: 22"x 34"
0 4' 8' 16'

- FINAL DESIGN -
FOR AGENCY
APPROVAL ONLY

REGISTERED PROFESSIONAL ENGINEER
HARDEE P. SINGH
No. M-37414
Exp. 06/30/2017
MECHANICAL
STATE OF CALIFORNIA
11/11/2015

CALLISONRTKL
A DESIGN CONSULTANCY OF ARCADIS

ARCADIS

NO.	DATE	DESCRIPTION	GM/SPEC	DWN	CHKD	SUPV	APVD BY
1	11/18/2015	FINAL DESIGN		JMH	HS	HS	RAO

REVISIONS

APPROVED BY	SO	
RAO	SUPV	HS
	DSGN	Author
	DWN	Author
	CHKD	Checker
	OK	
	DATE	11/18/2015
	SCALES	1/4" = 1'-0"

TOPOCK GROUNDWATER REMEDIATION PROJECT
OPERATION BUILDING (BUILDING 8)

MECHANICAL FLOOR PLAN
GAS TRANSMISSION & DISTRIBUTION
PACIFIC GAS AND ELECTRIC COMPANY
SAN FRANCISCO, CALIFORNIA

MICROFILM
BILL OF MATL
DWG LIST
SUPSDS
SUPSD BY
SHEET NO. of SHEETS
M-08-01
REV 0

Project Number

COPYRIGHT © 2015 CALLISON

N1808

C:\Users\jharman\Documents\TOPOCK-8 MECHANICAL-CENTRAL_jharman.rvt
11/12/2015 5:51:51 PM

DIFFUSER REGISTER AND GRILLE SCHEDULE

DESIG	SERVICE	MOUNTING		INLET SIZE IN		MATERIAL						BASIS OF DESIGN		REMARKS
												MAKE	MODEL	
SG-1	SUPPLY	SIDEWALL		10x8		ALUM						TITUS	300 RL	
SG-2	SUPPLY	SIDEWALL		8x6		ALUM						TITUS	300 RL	
EG-1	SUPPLY	DUCT MOUNTED		8x6		ALUM						TITUS	350 RL	

FAN SCHEDULE

DESIG	LOCATION	SYSTEM	CFM	SP (IN WG)	MOTOR INFORMATION			OPERATING WEIGHT (LBS)	BASIS OF DESIGN		REMARKS
					HP	RPM	VOLTS/PHASE/HZ		MANUFACTURER	MODEL NUMBER	
EF-1	WOMEN'S BATHROOM	EXHAUST	350	0.5	1/6	1725	115V/1ø/60	59	GREENHECK	SQ-85-VG	1 2 3

1. PROVIDE 2-SPEED/2-WINDING MOTOR; PROVIDE STARTER IN NEMA 1 ENCLOSURE
2. PROVIDE BACKDRAFT DAMPER
3. PROVIDE DISCONNECT.

DX AIR HANDLING UNIT SCHEDULE

DESIG RTU-	TYPE	FAN DATA							DX COOLING COIL DATA					PRE-HEATING COIL DATA		ELECTRICAL		REFRIGERANT	OPERATING WEIGHT (LBS)	BASIS OF DESIGN		REMARKS
		CFM	OA CFM	TSP/ESP (IN-H2O)	WHEEL DIAMETER (IN)	# OF FANS	MOTOR HP	NOMINAL RPM	TOTAL CAP (MBH)	SENS CAP (MBH)	EAT (°F) (DB/WB)	LAT (°F) (DB/WB)	AMB TEMP (°F) (DB/WB)	TYPE	KW	MCA	VOLTS/PHASE/HZ			MANUFACTURER	MODEL NUMBER	
AHU-1	CV	580	580	0.5/0.15	11	1	1.00	1500	25.6	25.6	115/71	70.1/55.8	115/71	HEAT PUMP	3.5	4	208/1/60	R410A	377	AAON	H3-ARB-9-0-141D	1 2 3

1. PROVIDE DISCONNECT SWITCH, HIGH EFFICIENCY EC MOTOR.
2. PROVIDE MERV-8 FILTER.
3. HEATING COIL CONDITIONS: EAT = 40DB/39WB (°F), LAT = 84.1DB/58.7WB (°F), CAP. = 29.2 MBH.

VRV/FCU SCHEDULE

DESIG.	TYPE	AREA SERVED	AIR FLOW CFM	ESP (IN. W.G.)	COOLING		HTG MBH	ELECTRICAL			WEIGHT (LB)	REFRIG.	DIMEN. HxWxD (IN.)	REMARKS
					TOT. MBH	SENS. MBH		INPUT POWER (KW)	MCA	V-ø-HZ				
VRV-1	WALL MTD	ELECTRICAL 109	260	-	7.5	6.4	-	0.02	0.4	208-1-60	26	R-410A	11x31x9	1 2 3
VRV-2	WALL MTD	TELECOM 108	260	-	7.5	6.4	-	0.02	0.4	208-1-60	26	R-410A	11x31x9	1 2 3
VRV-3	WALL MTD	BREAKROOM 102	300	-	12	8.9	13.5	0.04	0.4	208-1-60	26	R-410A	11x31x9	2 3 4 6
VRV-4	WALL MTD	OFFICE AREA 101	500	-	18	18	20	0.04	0.5	208-1-60	31	R-410A	11x41x9	2 3 5 6
FCU-1	WALL MTD	TELECOM 108 (STANDBY)	325	-	9.5	5.6	-	0.84		208-1-60	16	R-410A	11x30x8	2 3 7

1. BASIS OF DESIGN: DAIKIN FXAQ07PVJU
2. COOLING CAPACITY BASED ON NOMINAL INDOOR CONDITIONS OF 80/67 (°F DB/WB) AND AMBIENT CONDITIONS OF 95/75 (°F DB/WB).
3. PROVIDE DISCONNECT, WALL MOUNTED THERMOSTAT
4. BASIS OF DESIGN DAIKIN FXAQ12PVJU.
5. BASIS OF DESIGN DAIKIN FXAQ18PVJU.
6. HEATING CAPACITY BASED ON NOMINAL INDOOR CONDITIONS OF 70/70 (°F DB/WB) AND AMBIENT CONDITIONS OF 47/43 (°F DB/WB).
7. BASIS OF DESIGN: DAIKIN FTXN09KEVJU5

HEAT PUMP SCHEDULE

MARK	LOCATION	CAPACITY		REFRIG TYPE	COMPRESSOR		GENERAL					FAN			PHYSICAL		ELECTRICAL						REFRIG. PIPING				BASIS OF DESIGN	REMARKS
		COOLING (MBH)	HEATING (MBH)		TYPE	QTY (#)	SERVICE	CLG SEER	CLG EER	HSPF	HTG COP	AIRFLOW (CFM)	QTY	POWER (HP)	HxWxD (IN.)	WEIGHT (LB)	INPUT POWER (KW)	MCA	VOLTS (V)	PHASE (ϕ)	HERTZ (Hz)	MAX. EQUIVALENT PIPE LENGTH (FT.)	MAX. VERT. PIPE LENGTH (FT.)	CHARGE (LB/FT)			
HP-1	OUTSIDE ELEC. ROOM	55.6	73.2	R-410	INVERTER	1	VRV-1,2,3,4	14.0	15.8	8.2	4.3	5544	1		67x37x30	507	5.9	15.2	480	3	60	540	295	21.9	DAIKIN REYQ72TYDN	1 2 3
HP-2	OUTSIDE ELEC. ROOM	9.5	-	R-410	INVERTER	1	FCU-1	18	12	-	-		1		22x26x10	68		4.8	208	1	60	66	49	2.2	DAIKIN RKN09KEVJU5	3 4 5 6
HP-3	OUTSIDE ELEC. ROOM	28.9	35.8	R-410		1	AHU-1	-	8.4	-	4.3		1	1/6	57x63x29	358		7	480	3	60				AAON CFA-003-A-0-3	3

1. COOLING OPERATING RANGE = 23-122°F.
2. HEATING OPERATING RANGE = -13-60 °F.
3. COOLING CAPACITY RATED AT 115°F.
4. COOLING OPERATING RANGE = 14-115°F.
5. HEATING OPERATING RANGE = 5-77 °F.
6. HP-2 AND FCU-1 SHALL SERVE AS BACKUP COOLING SOURCE FOR TELECOM ROOM IN THE EVENT THAT HP-1 OR VRV-2 FAILS.

- FINAL DESIGN -
FOR AGENCY APPROVAL ONLY

REGISTERED PROFESSIONAL ENGINEER
MARDEE P. SHIGIN
No. M-37414
Exp. 06/30/16
MECHANICAL
STATE OF CALIFORNIA
11/18/2015

CALLISONRTKL
A DESIGN CONSULTANCY OF ARCADIS
ARCADIS

NO.	DATE	DESCRIPTION	GM/SPEC	DWN	CHKD	SUPV	APVD BY
1	11/18/2015	FINAL DESIGN		JMH	HS	HS	RAO

REVISIONS

APPROVED BY	
	SO
RAO	SUPV HS
	DSGN Author
	DWN Author
	CHKD Checker
	OK
	DATE 11/18/2015
	SCALES 12" = 1'-0"

TOPOCK GROUNDWATER REMEDIATION PROJECT
OPERATION BUILDING (BUILDING 8)

MECHANICAL SCHEDULES
GAS TRANSMISSION & DISTRIBUTION
PACIFIC GAS AND ELECTRIC COMPANY
SAN FRANCISCO, CALIFORNIA

MICROFILM	
BILL OF MATL	
DWG LIST	
SUPSDS	
SUPSD BY	
SHEET NO.	of SHEETS
M-08-03	REV 0

Project Number

COPYRIGHT © 2015 CALLISON

N1808

11/12/2015 5:52:03 PM
C:\Users\jhamman\Documents\TOPOCK 8 MECHANICAL-CENTRAL_jhamman.rvt

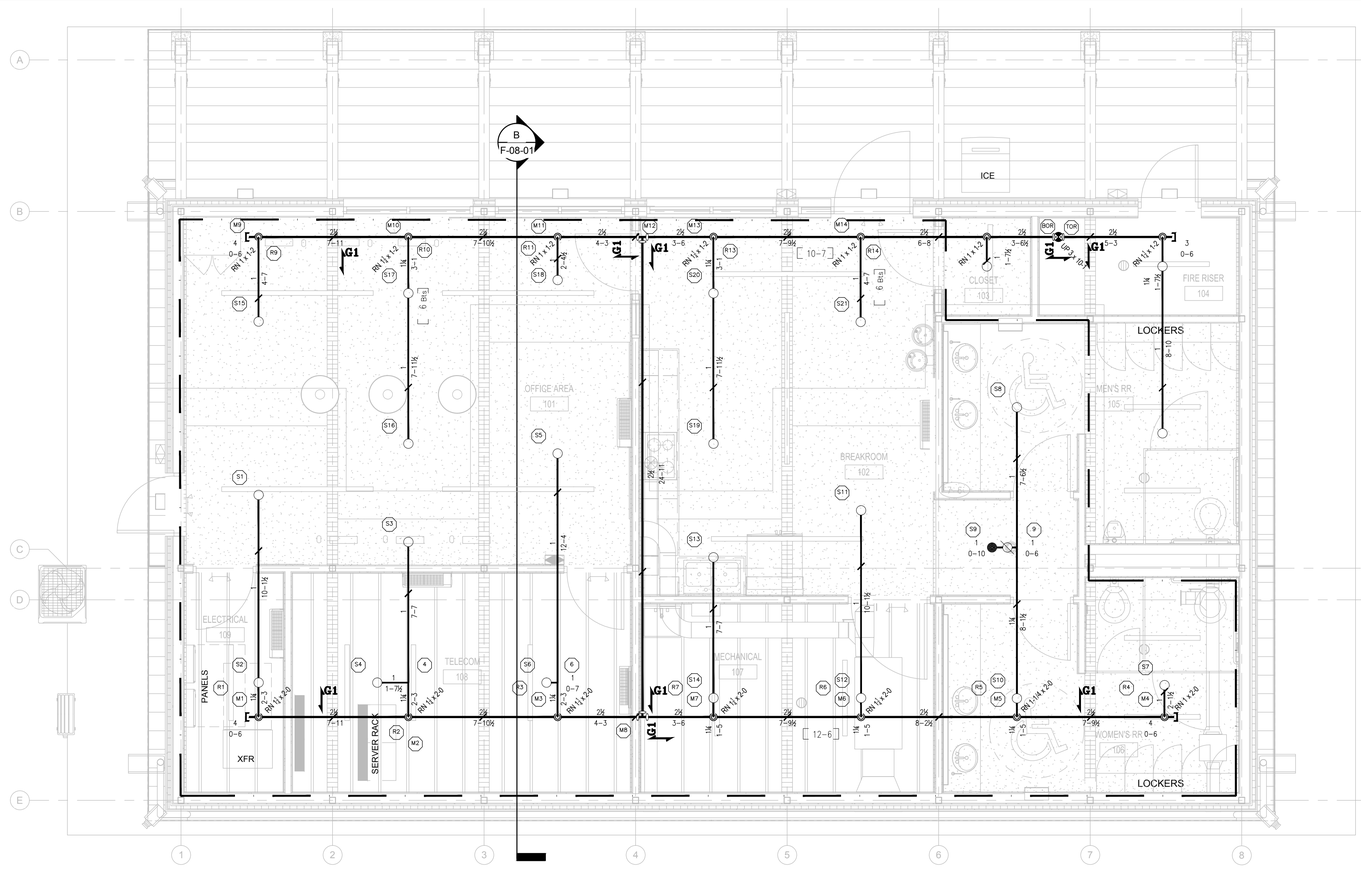

A TRANSWESTERN BENCH OPERATIONS BUILDING
1/4" = 1'-0"

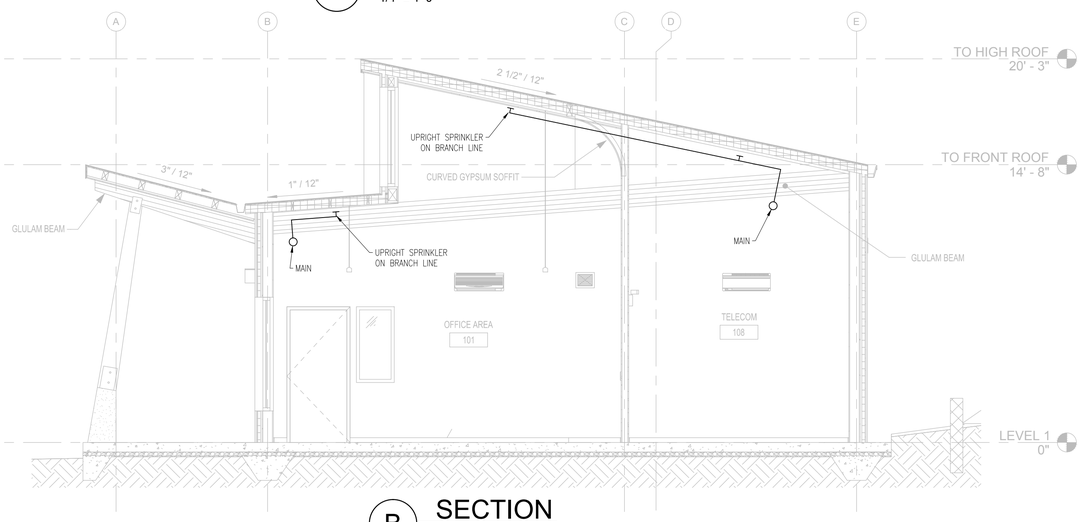

B SECTION
1/4" = 1'-0"

CALCULATION DESIGN INFORMATION

SYSTEM or AREA No.	ONE
QUICK RESPONSE SPRINKLERS?	YES
SYSTEM TYPE.	WET
K-FACTOR.	5.6
HAZARD.	ORD. GP. 2
DENSITY (GPM/FT^2)	.10/.15
AREA PER SPRINKLER (FT^2)	148
AREA OF OPERATION (FT^2)	1500
AREA OF OPERATION ADJUSTED AS FOLLOWS:	
DRY PIPE INCREASE (30%)	N/A
SLOPE >2:12 INCREASE (30%).	N/A
CEILING HEIGHT:	N/A
% REDUCTION:	N/A
CEILING HEIGHT REDUCTION (FT^2)	N/A
ADJ. AREA OF OPERATION (FT^2)	1500

WATER SUPPLY

STATIC (PSI).	N/A
RESIDUAL (PSI)	N/A
FLOW (GPM)	N/A
PUMP (GPM @ PSI).	N/A @ N/A

SYSTEM DEMAND
REQUIRED AT: BASE OF RISER

PSI REQUIRED	40.187
GPM REQUIRED.	428.91
PSI AVAILABLE.	N/A
GPM AVAILABLE	N/A
SAFETY MARGIN	N/A
HOSE STREAM DEMAND (GPM):	
INSIDE:. N/A – OUTSIDE:.	250
LOCATION:	WORKSHOP

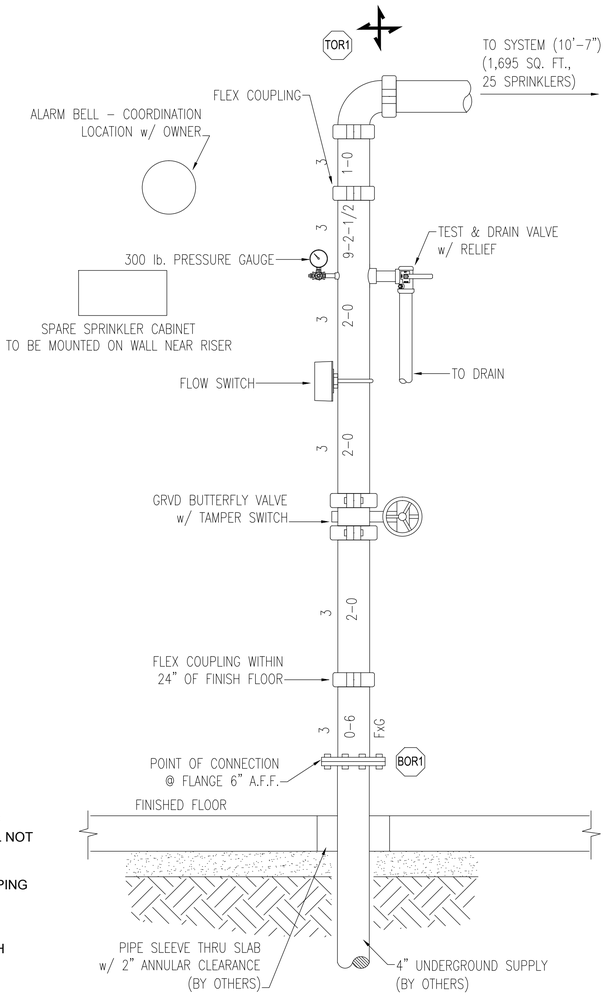

FIRE SPRINKLER RISER DETAIL
NO SCALE

PIPING PLAN

1. AT OBSTRUCTED CONSTRUCTION SPRINKLER DEFLECTOR SHALL NOT EXCEED 6" BELOW THE BOTTOM OF THE FRAMING. (DEFLECTOR SHALL NOT EXCEED 22" BELOW THE DECK.)
2. MAIN PIPING SHALL HANG AT 10'-7" AFF. LINE PIPING SHALL HANG AT 6" BOTTOM OF FRAMING.
3. MAIN HANGERS SHALL BE (#4) SIDE BREAM BRACKET.LINE HANGERS SHALL BE (#13) COACH SCREW ROD (SEE DETAILS).
4. MAIN PIPING SHALL BE SCHEDULE 10 STEEL (THINWALL) AND SHALL BE ROLL GROOVED PER NFPA 13. LINE PIPING SHALL BE SCHEDULE 40 STEEL (STANDARD) AND SHALL BE GROOVED OR THREADED PER NFPA.

SPRINKLERS

SYM	CNT	ORIF, K-FACTOR	NPT	MFG.	TEMP	FINISH	RESPONSE-STYLE	S.I.N.	MODEL#	ESCUTCHEON
○	23	(1/2", K=5.6)	1/2"	VKG	155	BRASS	QR - SSU	VK300	MFAST	N/A
⊘	1	(1/2", K=5.6)	1/2"	VKG	200	BRASS	QR - SSU	VK300	MFAST	N/A
◎	1	(1/2", K=5.6)	1/2"	VKG	155	CHRM	QR - SSP	VK302	MFAST	WHT E-1 RECESSED

25 = TOTAL SPRINKLERS THIS SHEET

- FINAL DESIGN - FOR AGENCY APPROVAL ONLY

LICENSED FIRE PROTECTION CONTRACTOR – CLASSIFICATION C-16 LICENSE No. 570970 – STATE OF CALIFORNIA

MARQUEE FIRE PROTECTION
710 W. Stadium Lane
Sacramento, CA. 95834–1130
TEL. 916. 641–7997 / 707. 642–7905
FAX. 916. 641–0775
CA. LIC. 570970 C–16

ARCADIS

N1808

NO.	DATE	DESCRIPTION	GM/SPEC	DWN	CHKD	SUPV	APVD	BY
1	11/18/15	FINAL DESIGN		TPH	TPH	JJA	RAO	
0	09/08/14	PRE-FINAL (90%) DESIGN		HZ	BR	HZ	HZ	

REVISIONS

APPROVED BY	
RAO	SO
	SUPV
	DSGN
	DWN
	CHKD
	OK
	DATE
	SCALES

TOPOCK GROUNDWATER REMEDIATION PROJECT
FIRE PROTECTION TRANSWESTERN BENCH OPERATIONS BUILDING
GAS TRANSMISSION & DISTRIBUTION
PACIFIC GAS AND ELECTRIC COMPANY
SAN FRANCISCO, CALIFORNIA

MICROFILM	
BILL OF MATL	
DWG LIST	
SUPSDS	
SUPSD BY	
SHEET NO. of SHEETS	
F-08-01	REV 1

11/02/2015, 09:48, G:\Graphics\ART\TOPOCK-011\Submittal_100%\DWGs\F-Fire Protection\F-00-01_00-02_F-08-01_F-08-01.dwg, Tab: F-08-01

PLUMBING ABBREVIATIONS

A	A	COMPRESSED AIR
	AD	AREA DRAIN
	A/D	ACCESS DOOR
	AFF	ABOVE FINISHED FLOOR
	AFG	ABOVE FINISHED GRADE
	AIR	LABORATORY COMPRESSED AIR
	ANSI	AMERICAN NATIONAL STANDARDS INSTITUTE
	ANV	ANGLE VALVE
	AQ	AQUASTAT
	ARCH	ARCHITECT
	ATM	ATMOSPHERE
	AV	ACID VENT
	AW	ACID WASTE
	AWG	AMERICAN WIRE GAUGE
B	BC	BALANCING COCK
	BFF	BELOW FINISHED FLOOR
	BFV	BUTTERFLY VALVE
	BFP	BACKFLOW PREVENTER
	BHP	BRAKE HORSEPOWER
	BTU	BRITISH THERMAL UNIT
	BTUH	BRITISH THERMAL UNITS PER HOUR
	BWV	BACKWATER VALVE
	BV	BALL VALVE
C	^ C	DEGREE CELSIUS
	CCR	CONCENTRIC REDUCER
	C TO C	CENTER TO CENTER
	CD	CONDENSATE DRAIN
	CFH	CUBIC FEET PER HOUR
	CFM	CUBIC FEET PER MINUTE
	CFS	CUBIC FEET PER SECOND
	CO	CLEANOUT
	CU FT	CUBIC FEET
	CU IN	CUBIC INCH
	CV	CHECK VALVE
	CW	COLD WATER
	CX	CONNECT TO EXISTING
D	D	DRAIN
	DBA	DECIBEL TO 'A' REFERENCE
	DE	DEIONIZED WATER
	DEG	DEGREE
	DER	DEIONIZED WATER RETURN
	DF	DIESEL FUEL
	DI	DISTILLED WATER
	DIA	DIAMETER
	DN	DOWN
	DTL	DETAIL
	DWG	DRAWING
E	(E)	EXISTING
	EC	EXPANSION COMPENSATOR
	EFF	EFFICIENCY
	EJ	EXPANSION JOINT
	EL	ELEVATION
	ER	ECCENTRIC REDUCER
	EVAC	EVACUATION (ANESTHETIC GAS)
	EWC	ELECTRIC WATER COOLER
	EX	EXISTING
	EXP	EXPANSION
F	° F	DEGREE FAHRENHEIT
	F	FIRE PROTECTION WATER SUPPLY
	FC	FLEXIBLE CONNECTOR
	FCO	FLOOR CLEANOUT
	FD	FLOOR DRAIN
	FDC	FIRE DEPARTMENT CONNECTION
	FF ELEV	FINISHED FLOOR ELEVATION
	F TO F	FACE TO FACE
	FHC	FIRE HOSE CABINET
	FHV	FIRE HOSE VALVE
	FLEX CONN	FLEXIBLE CONNECTION
	FPM	FEET PER MINUTE
	FPS	FEET PER SECOND
	FS	FLOW SWITCH OR FLOOR SINK
	F&T	FLOAT AND THERMOSTATIC
	FVC	FIRE VALVE CABINET
G	G	GAS-LOW PRESSURE (NATURAL)
	GAL	GALLON(S)
	GC	GAS COCK
	GCO	GRADE CLEANOUT
	GD	GARAGE OR GUTTER DRAIN
	GH	GROUND HYDRANT
	GLV	GLOBE VALVE
	GPD	GALLONS PER DAY
	GPH	GALLONS PER HOUR
	GPM	GALLONS PER MINUTE
	GPR	GAS PRESSURE REGULATOR
	GV	GATE VALVE
H	HB	HOSE BIBB
	HD	HEAD OR HUB DRAIN
	HPG	GAS-HIGH PRESSURE (NATURAL)
	HGT	HEIGHT
	HOR	HORIZONTAL
	HP	HORSEPOWER
	HTB	HEIGHT TO BOTTOM
	HTR	HEATER
	HVAC	HEATING VENTILATING AND AIR CONDITIONING
	HW	HOT WATER (^F)
	HWR	HOT WATER RECIRCULATING (^F)
I	ID	INSIDE DIAMETER
	INV	INVERT ELEVATION
	IPS	INTERNATIONAL PIPE STANDARD
	IRR	IRRIGATION
	IW	INDIRECT WASTE
K	KV	KITCHEN VENT
	KVTR	KITCHEN VENT THRU ROOF
	KW	KITCHEN WASTE
L	LA	LABORATORY COMPRESSED AIR
	LBS	POUNDS
	LCSA	LOUDOUN COUNTY SANITATION AUTHORITY
	LG	LENGTH
	LIN FT	LINEAR FEET
	LIQ	LIQUID
	LV	LABORATORY VACUUM
M	MA	MEDICAL COMPRESSED AIR
	MBH	THOUSAND BRITISH THERMAL UNITS PER HOUR
	MG	GAS-MEDIUM PRESSURE (NATURAL)
	MTD	MOUNTED
	MTG HGT	MOUNTING HEIGHT
	MUW	MAKE-UP WATER
	MV	MEDICAL VACUUM
N	N	NITROGEN
	NA	NOT APPLICABLE
	NC	NOISE CRITERIA
	N.C.	NORMALLY CLOSED
	NEC	NATIONAL ELECTRIC CODE
	NF	NON-FREEZE
	NIC	NOT IN CONTRACT
	N.O.	NORMALLY OPEN
	No	NUMBER
	N2O	NITROUS OXIDE
	NPR	NON-POTABLE RECLAIM
	NS	NO SCALE
	NTS	NOT TO SCALE
O	OC	ON CENTER
	OD	OUTSIDE DIAMETER
	OS&Y	OUTSIDE SCREW AND YOKE
	OSD	OPEN SITE DRAIN
	OX	OXYGEN
P	PD	PUMP DISCHARGE OR PLANTER DRAIN
	PG	PIPE GUIDE
	PGA	PRESSURE GAUGE
	PH	PHASE
	PLBG	PLUMBING
	PR	PRESSURE REGULATOR
	PRESS	PRESSURE
	PRESS DIFF	PRESSURE DIFFERENTIAL
	PRV	PRESSURE REDUCING VALVE
	PS	PRESSURE SWITCH
	PSI	POUNDS PER SQUARE INCH
	PT	PLUGGED TEE, PIPE THREAD
	PTR	PRESSURE/TEMPERATURE RELIEF VALVE
Q	QT	QUART
	QTY	QUANTITY
R	RAD	RADIUS
	RCV	RISER CONTROL VALVE
	RD	ROOF DRAIN
	RES	RESISTANCE
	REV	REVOLUTIONS
	RP	RESIDUAL PRESSURE
	RPM	REVOLUTIONS PER MINUTE
	RPS	REVOLUTIONS PER SECOND
	RPZ	REDUCED PRESSURE ZONE
	RV	RELIEF VALVE
S	SAN	SANITARY
	SEC	SECOND
	SF	SQUARE FEET
	SP	STATIC PRESSURE
	SPEC	SPECIFICATIONS
	SQ	SQUARE
	SSD	SUB SOIL DRAIN
	ST	STORM WATER
	STD	STANDARD
	STR	STRAINER
	SUCT	SUCTION
	SYM	SYMBOL
	SYS	SYSTEM
T	TD	TEMPERATURE DIFFERENCE
	TDH	TOTAL DYNAMIC HEAD
	TEMP	TEMPERATURE
	TMV	THERMOSTATIC MIXING VALVE
	TOT	TOTAL
	TP	TRAP PRIMER
	TPS	TRAP PRIMING STATION
	TS	TAMPER SWITCH
	TYP	TYPICAL
U	UD	UNDER DRAIN
	UN	UNION
	UNO	UNLESS NOTED OTHERWISE
	UG	UNDERGROUND
V	V	VENT OR VOLT
	VAC	VACUUM
	VAP PR	VAPOR PRESSURE
	VAP PRF	VAPOR PROOF
	VB	VACUUM BREAKER
	VEL	VELOCITY
	VERT	VERTICAL
	VOL	VOLUME
	VP	VELOCITY PRESSURE
	VTR	VENT THRU ROOF
W	W	WATT
	W/	WITH
	WC	WATER CLOSET
	WCO	WALL CLEANOUT
	WD	WIDE, WIDTH
	WH	WALL HYDRANT
	WHA	WATER HAMMER ARRESTER
	WT	WEIGHT
	WTR	WATER
Y	YB	YARD BOX
	YCO	YARD CLEANOUT
	YD	YARD
	YH	YARD HYDRANT
Z	Z	ZONE

RISER DESIGNATIONS

- COLD WATER RISER
- HOT WATER RISER
- FIRE RISER
- GAS RISER
- SANITARY STACK
- STORM DRAIN
- WET STACK
- SERVICE / RISER NUMBER

REFERENCE SYMBOLS

- CONNECTION TO EXISTING
- ELEVATION
- REVISION TRIANGLE
- NON-SPRINKLERED AREA
- DEMOLITION WORK
- DEMOLITION NOTE
- DRAWING NOTE
- DETAIL NUMBER / DRAWING WHERE DETAIL IS SHOWN

FIRE PROTECTION PIPING

- SP — AUTOMATIC FIRE SPRINKLER LINE
- ED — EXPRESS DRAIN
- F — FIRE PROTECTION WATER
- DS — DRY SPRINKLER

FUEL OIL PIPING

- FOF — FUEL OIL FILL
- FOG — FUEL OIL GAUGE
- FOR — FUEL OIL RETURN
- FOS — FUEL OIL SUPPLY
- FOV — FUEL OIL VENT
- HPG — GAS - HIGH PRESSURE
- G — GAS - LOW PRESSURE
- MPG — GAS - MEDIUM PRESSURE

PLUMBING PIPING

- COLD WATER
- FD — FOUNDATION DRAIN
- HOT WATER (^F)
- HOT WATER RECIRCULATING (^F)
- IW — INDIRECT WASTE
- KW — KITCHEN WASTE
- PD — PUMP DISCHARGE
- SOIL, WASTE OR SANITARY SEWER
- SD — STORM DRAIN, RAINWATER DRAIN
- SSD — SUB-SOIL DRAIN
- OFD — STORM DRAIN, OVERFLOW DRAIN
- OFD — SUB-SOIL OVERFLOW DRAIN
- VENT

PIPING ELEMENTS

- POINT OF CONNECTION TO SITE UTILITIES
- BRANCH, BOTTOM CONNECTION
- BRANCH, SIDE CONNECTION
- BRANCH, TOP CONNECTION
- CAP ON END OF PIPE
- FLOW IN DIRECTION OF ARROW
- PIPE TURNED DOWN
- PIPE TURNED UP
- PITCH PIPE DOWN IN DIRECTION OF ARROW
- PLUGGED TEE
- RISE OR DROP
- SPOOL PIECE, FLANGED

PIPING EQUIPMENT

- AREA OR FLOOR DRAIN
- CLEANOUT, FLOOR
- CLEANOUT, PLUG
- CLEANOUT, WALL
- CLEANOUT, YARD
- CONCENTRIC REDUCER
- ECCENTRIC REDUCER
- EXPANSION COMPENSATOR
- EXPANSION JOINT
- FLANGES
- FLEXIBLE CONNECTOR
- FLOOR SINK
- FLOW SWITCH
- MANUAL AIR VENT

PIPING EQUIPMENT

- PIPE ANCHOR
- PIPE GUIDE
- PIPE SLEEVE
- PLANTER DRAIN
- ROOF DRAIN
- ROOF DRAIN WITH OVERFLOW
- SPRINKLER HEAD, PENDANT
- SPRINKLER HEAD, SIDEWALL
- SPRINKLER HEAD, UPRIGHT
- STAINER
- STAINER WITH BLOWDOWN
- THERMOMETER
- UNION
- VACUUM BREAKER
- WATER HAMMER ARRESTER
- WATER PRESSURE GAUGE

SPECIALTY PIPING

- AV — ACID VENT
- AW — ACID WASTE
- ATV — ATMOSPHERIC VENT (STEAM OR HOT VAPOR)
- CL — CHLORINATED WATER
- DES — DEIONIZED WATER SUPPLY
- DER — DEIONIZED WATER RETURN
- DIS — DISTILLED WATER SUPPLY
- DIR — DISTILLED WATER RETURN
- EVAC — EVACUATION (ANESTHETIC GAS)
- IRR — IRRIGATION WATER
- LA — LABORATORY COMPRESSED AIR
- LV — LABORATORY VACUUM
- A — COMPRESSED AIR (X#A, X=PSI)
- MA — MEDICAL COMPRESSED AIR
- MV — MEDICAL VACUUM
- N — NITROGEN
- N20 — NITROUS OXIDE
- O — OXYGEN

VALVING

- ALARM CHECK VALVE
- ANGLE VALVE
- BACKFLOW PREVENTER
- BALANCING VALVE
- BALL VALVE
- BUTTERFLY VALVE
- CHECK VALVE
- GAS COCK
- GATE VALVE
- GLOBE VALVE
- OUTSIDE SCREW AND YOKE GATE VALVE
- PLUG VALVE
- PRESSURE REDUCING VALVE
- PRESSURE RELIEF VALVE
- FIRE DEPARTMENT CONNECTION
- THERMOSTATIC MIXING VALVE
- VALVE IN VERTICAL
- VALVE IN YARD BOX
- VALVE WITH TAMPER SWITCH
- WALL HYDRANT/HOSE BIBB (AS INDICATED)
- MOTOR OPERATED VALVE
- SOLENOID VALVE

GENERAL PLUMBING NOTES

1. SANITARY PIPING SHALL BE SLOPED AT A MINIMUM 1/4" PER FOOT.

- FINAL DESIGN - FOR AGENCY APPROVAL ONLY

REGISTERED PROFESSIONAL ENGINEER — AMIRDEE P. SINGH — No. M-37414 — Exp. 06/30/2017 — MECHANICAL — STATE OF CALIFORNIA

11/12/2015

CALLISONRTKL A DESIGN CONSULTANCY OF ARCADIS

ARCADIS

NO.	DATE	DESCRIPTION	GM/SPEC	DWN	CHKD	SUPV	APVD BY
1	11/18/2015	FINAL DESIGN		JMH	HS	HS	RAO

REVISIONS

APPROVED BY	
RAO	
SO	
SUPV	HS
DSGN	Author
DWN	Author
CHKD	Checker
OK	
DATE	11/18/2015
SCALES	12" = 1'-0"

TOPOCK GROUNDWATER REMEDIATION PROJECT

OPERATION BUILDING (BUILDING 8)

PLUMBING LEGEND, ABBREVIATIONS & NOTES

GAS TRANSMISSION & DISTRIBUTION

PACIFIC GAS AND ELECTRIC COMPANY

SAN FRANCISCO, CALIFORNIA

MICROFILM	
BILL OF MATL	
DWG LIST	
SUPSDS	
SUPSD BY	
SHEET NO.	of SHEETS
P-08-00	REV 0

Project Number

COPYRIGHT © 2015 CALLISON

N1808

C:\Users\jhaman\Documents\TOPOCK-8 MECHANICAL CENTRAL_jhaman.rvt

11/12/2015 5:52:10 PM

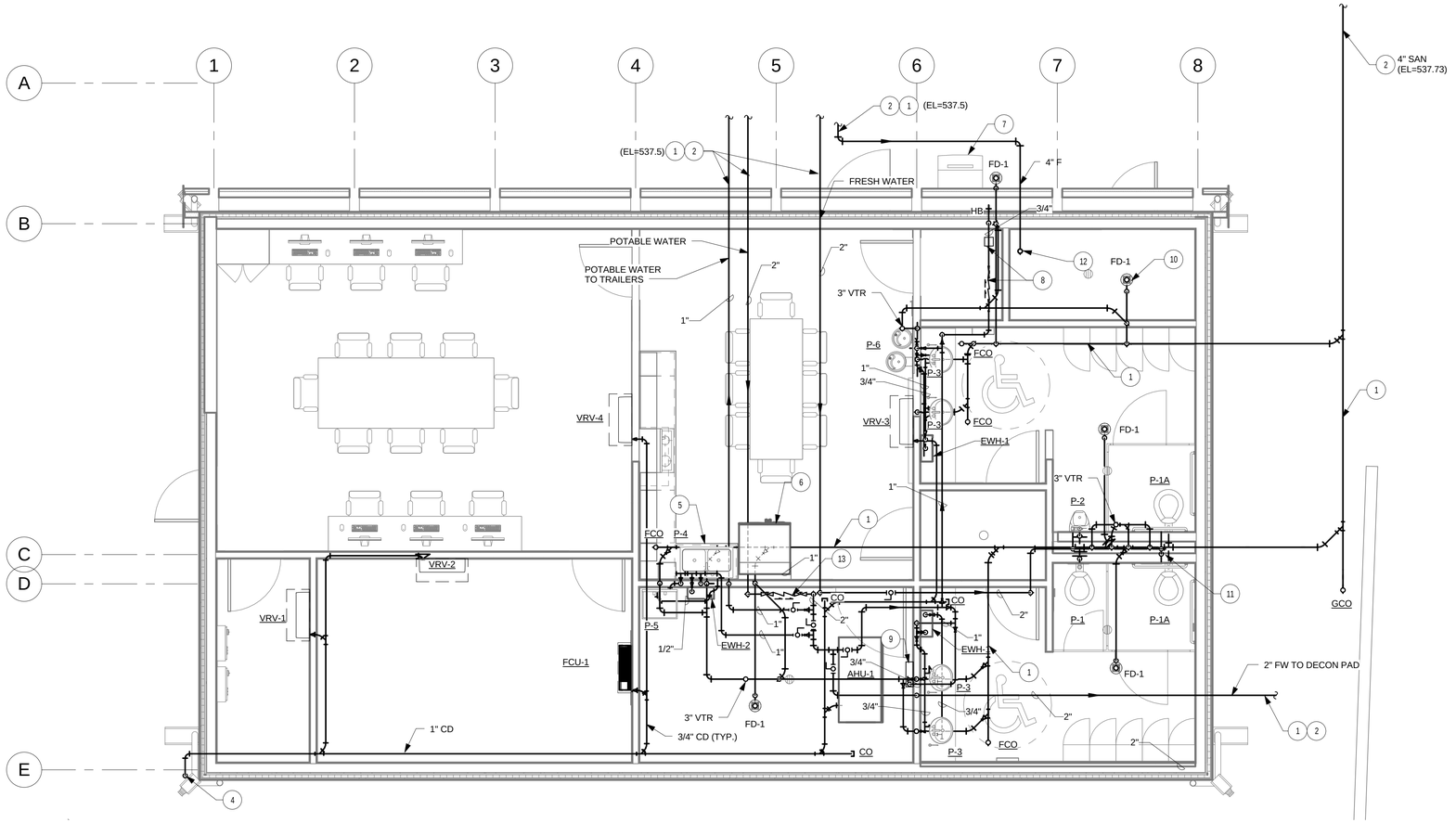

DRAWING NOTES:

1. PIPING LOCATED BELOW SLAB ON GRADE. PIPING SHALL BE HDPE.
2. REFER TO CIVIL DRAWINGS FOR CONTINUATION.
3. TANKLESS, ELECTRIC WATER HEATER MOUNTED BELOW COUNTERTOP PER DETAIL.
4. CONDENSATE DRAIN PIPING SHALL DISCHARGE AT GRADE INDIRECTLY TO STORMWATER SPLASHBLOCK.
5. PROVIDE DUAL CHECK BACKFLOW PREVENTER AND WATER FILTER INSTALLED BELOW COUNTERTOP. EXTEND TO OWNER FURNISHED REFRIGERATOR. REFER TO DETAIL AND RISER FOR ADDITIONAL INFORMATION.
6. OWNER FURNISHED REFRIGERATOR. PROVIDE WATER CONNECTION PER MANUFACTURER'S REQUIREMENTS.
7. OWNER FURNISHED ICE MAKER. PROVIDE WATER CONNECTION PER MANUFACTURER'S REQUIREMENTS FROM HOSE BIB. PIPE DRAIN PIPING TO FLOOR DRAIN PER MANUFACTURER'S RECOMMENDATIONS.
8. PROVIDE DUAL CHECK BACKFLOW PREVENTER AND WATER FILTER. EXTEND TO OWNER FURNISHED ICE MAKER. REFER TO DETAIL AND RISER FOR ADDITIONAL INFORMATION.
9. PROVIDE PRECISION PLUMBING PRODUCTS ELECTRONIC TRAP PRIMING ASSEMBLY (120V/1PH/60HZ), MODEL PTS-5, OR APPROVED EQUAL, WITH SERVICE TO 5 FLOOR DRAINS.
10. LOCATE FLOOR DRAIN BELOW BACKFLOW PREVENTER FOR FIRE PROTECTION PIPING.
11. PROVIDE WATER HAMMER ARRESTOR INSIDE PLUMBING CHASE.
12. REFER TO FIRE PROTECTION DRAWINGS FOR CONTINUATION.
13. PROVIDE RPZ BACKFLOW PREVENTER ASSEMBLY. MOUNT 3'-0" AFF. REFER TO DETAIL FOR ADDITIONAL REQUIREMENTS.

SCALE: 1/4" = 1'-0"
AT: 22"x 34"
0 4' 8' 16'

- FINAL DESIGN - FOR AGENCY APPROVAL ONLY

REGISTERED PROFESSIONAL ENGINEER — HARDEEP P. SINGH — No. M-37414 Exp. 06/30/2017 — MECHANICAL — STATE OF CALIFORNIA
11/18/2015

CALLISONRTKL A DESIGN CONSULTANCY OF ARCADIS
ARCADIS

NO.	DATE	DESCRIPTION	GM/SPEC	DWN	CHKD	SUPV	APVD BY
1	11/18/2015	FINAL DESIGN		JMH	HS	HS	RAO

REVISIONS

APPROVED BY	
SO	
RAO	SUPV HS
	DSGN Author
	DWN Author
	CHKD Checker
	OK
	DATE 11/18/2015
	SCALES 1/4" = 1'-0"

TOPOCK GROUNDWATER REMEDIATION PROJECT
OPERATION BUILDING (BUILDING 8)

PLUMBING FLOOR PLAN
GAS TRANSMISSION & DISTRIBUTION
PACIFIC GAS AND ELECTRIC COMPANY
SAN FRANCISCO, CALIFORNIA

MICROFILM	
BILL OF MATL	
DWG LIST	
SUPSDS	
SUPSD BY	
SHEET NO. of	SHEETS
P-08-01	REV 0

Project Number

COPYRIGHT © 2015 CALLISON

N1808

C:\Users\jharman\Documents\TOPOCK\8 MECHANICAL-CENTRAL_jharman.rvt
11/12/2015 5:52:20 PM

ELECTRIC TANKLESS WATER HEATER SCHEDULE

TAG	LOCATION	SERVICE	TYPE	KW	VOLTS / PHASE	AMPS	DESIGN FLOW	TURN ON FLOW	INLET TEMP	TEMP SET	DIMENSIONS (H x W x D)	BASIS OF DESIGN	NOTES
EWH-1	REFER TO DRAWINGS	DOMESTIC HOT WATER	ELECTRIC	6.5	208 / 1	27	0.5 GPM	0.3 GPM	40°F	105°F	13.5" x 5" x 4"	EEMAX MT007240T	1, 2, 3, 4, 5
EWH-2	REFER TO DRAWINGS	DOMESTIC HOT WATER	ELECTRIC	36	480/30	129	4.0 GPM	1.0 GPM	40°F	105°F	18" x 26" x 11"	EEMAX APO36480	1, 2, 3, 4, 5

NOTES:
1. PROVIDE QUANTITY OF TANKLESS WATER HEATERS AS NOTED ON PLANS.
2. HEATER INCLUDES ASSE 1070 INTEGRATED MIXING VALVE.
3. BASIS OF DESIGN INDICATED FOR FITTING AT TOP OF UNIT - COORDINATE MODEL NUMBER WITH FINAL PLUMBING ORIENTATION.
4. INSTALL PER MANUFACTURER'S RECOMMENDATIONS.
5. PROVIDE DISCONNECT.

DRAIN SCHEDULE

TAG	FIXTURE	PIPE SIZE	STRAINER SIZE	STRAINER FREE AREA (SQ. IN.)	TRAP PRIMER SIZE	BASIS OF DESIGN	NOTE(S)
FD-1	TOILET/MECH ROOM	3"	6"	11	1/2"	JOSAM 30003-6A-VP	1,2

NOTES:
1. PROVIDE SECURED GRATE.
2. PROVIDE TRAP PRIMER CONNECTION FROM TRAP PRIMING STATION.

PLUMBING FIXTURE SCHEDULE

TAG	FIXTURE TYPE	CONNECTION(S)					FIXTURE				FITTING			MOUNTING	FLOW RATE	REMARKS
		CW	HW	TRAP	SAN	VENT	MFGR	MODEL	TYPE	SIZE	MFGR	MODEL	TYPE			
P-1	WATER CLOSET	1"	-	INT.	4"	2"	ZURN	Z5615-BWL	VITREOUS CHINA, HIGH EFFICIENCY, FLUSH VALVE	-	ZURN	Z6000PL-HET	EXPOSED, MANUAL, ADA COMPLIANT	WALL HUNG	1.28 GPF	COMMERCIAL HEAVY-DUTY ELONGATED OPEN FRONT PLASTIC TOILET SEAT
P-1A	WATER CLOSET	1"	-	INT.	4"	2"	ZURN	Z5615-BWL	VITREOUS CHINA, HIGH EFFICIENCY, FLUSH VALVE	-	ZURN	Z6000PL-HET	EXPOSED, MANUAL, ADA COMPLIANT	WALL HUNG	1.28 GPF	COMMERCIAL HEAVY-DUTY ELONGATED OPEN FRONT PLASTIC TOILET SEAT, ADA MOUNTING HEIGHT
P-2	URINAL	3/4"	-	INT.	2"	1-1/2"	ZURN	Z5798	VITREOUS CHINA, FLUSH VALVE, HIGH EFFICIENCY	-	ZURN	Z6003AV	EXPOSED, MANUAL, ADA COMPLIANT	WALL HUNG	1.0 GPF	ADA MOUNTING HEIGHT
P-3	LAVATORY	1/2"	1/2"	1-1/2"	2"	1-1/2"	ZURN	Z5111	VITREOUS CHINA, CENTER HOLE ONLY	20"x17" OVERALL	ZURN	Z6955-XL-S-M-10-5-TMV-1	DECK MTD, SINGLE HOLE, CAST SPOUT, BATTERY POWERED, IN-LINE FILTER, TIME OUT FEATURE, THERMO-STATIC MIXING VALVE	COUNTER-TOP, DROP IN	0.35 GPM	GRID STRAINER, P-TRAP, ADA-COMPLIANT INSULATION COVERS
P-4	TWO COMPARTMENT SINK	1/2"	1/2"	1-1/2"	2"	1-1/2"	ELKAY	LRAD3321	STAINLESS STEEL, CENTER HOLE ONLY	33"x21-1/4" x6-1/2" OVERALL	ZURN	Z8314C4-XL-ICT-18F	DECK MTD, 8" FIXED CENTERS, 8" GOOSENECK SPOUT, WRIST BLADE HANDLES, LOW LEAD COMPLIANT	COUNTER-TOP, DROP IN	1.5 GPM	LAMINAR FLOW CONTROL, TYPE 304 S/S GRID STRAINGER, P-TRAP
P-5	MOP BASIN	3/4"	3/4"	3"	3"	2"	FIAT	MSB 2424	MOLDED STONE	24"x24" x10" DEEP	ZURN	Z846M1-XL	WALL MOUNTED, LEVER HANDLES, PAIL HOOK, WALL HOOK, WALL BRACE, HOSE THREAD ON SPOUT, LOW LEAD COMPLIANT	FLOOR MOUNTED	2.5 GPM	HOSE AND HOSE BRACKET, MOP HANGER, DOME STRAINER, VINYL BUMPER GUARD, S/S WALL GUARD
P-6	DRINKING FOUNTAIN	1/2"	-	1-1/2"	2"	1-1/2"	ELKAY	LZWS-EDFP BM117L	300 S/S, "HI-LO" BARRIER FREE, BOTTLE FILLER, LEAD FILTER	-	-	-	-	WALL HUNG	1.5 GPM (BOTTLE FILLER)	ADA MOUNTING HEIGHT, FILTER LIFE INDICATOR (LED), ELECTRICAL - 120V/1PH

- FINAL DESIGN - FOR AGENCY APPROVAL ONLY

REGISTERED PROFESSIONAL ENGINEER
HARDEEP P. SINGH
No. M-37414
Exp. 06/30/17
MECHANICAL
STATE OF CALIFORNIA
11/11/2015

CALLISONRTKL
A DESIGN CONSULTANCY OF ARCADIS

ARCADIS

NO.	DATE	DESCRIPTION	GM/SPEC	DWN	CHKD	SUPV	APVD BY
1	11/18/2015	FINAL DESIGN		JMH	HS	HS	RAO

REVISIONS

APPROVED BY	
RAO	SO
	SUPV HS
	DSGN JMH
	DWN JMH
	CHKD HS
	OK
	DATE 11/18/2015
	SCALES 12" = 1'-0"

TOPOCK GROUNDWATER REMEDIATION PROJECT
OPERATION BUILDING (BUILDING 8)

PLUMBING SCHEDULES
GAS TRANSMISSION & DISTRIBUTION
PACIFIC GAS AND ELECTRIC COMPANY
SAN FRANCISCO, CALIFORNIA

MICROFILM	
BILL OF MATL	
DWG LIST	
SUPSDS	
SUPSD BY	
SHEET NO.	of SHEETS
P-08-02	REV 0

Project Number

COPYRIGHT © 2015 CALLISON

11/12/2015 5:52:26 PM

C:\Users\jhaman\Documents\TOPOCK-8 MECHANICAL_CENTRAL_jhaman.rvt

N1808

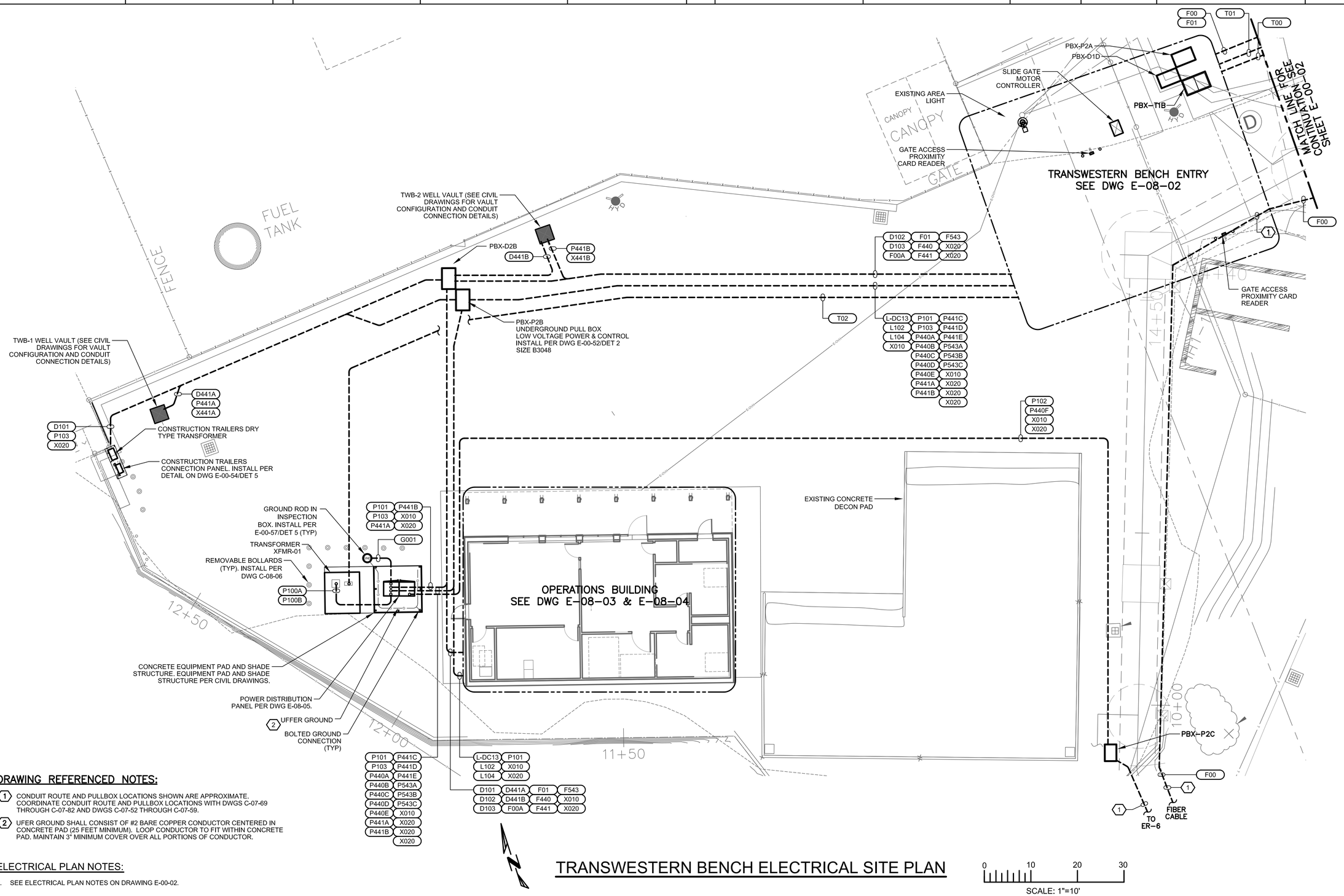

DRAWING REFERENCED NOTES:

1. CONDUIT ROUTE AND PULLBOX LOCATIONS SHOWN ARE APPROXIMATE. COORDINATE CONDUIT ROUTE AND PULLBOX LOCATIONS WITH DWGS C-07-69 THROUGH C-07-82 AND DWGS C-07-52 THROUGH C-07-59.
2. UFER GROUND SHALL CONSIST OF #2 BARE COPPER CONDUCTOR CENTERED IN CONCRETE PAD (25 FEET MINIMUM). LOOP CONDUCTOR TO FIT WITHIN CONCRETE PAD. MAINTAIN 3" MINIMUM COVER OVER ALL PORTIONS OF CONDUCTOR.

ELECTRICAL PLAN NOTES:

1. SEE ELECTRICAL PLAN NOTES ON DRAWING E-00-02.

TRANSWESTERN BENCH ELECTRICAL SITE PLAN

SCALE: 1"=10'

- FINAL DESIGN - FOR AGENCY APPROVAL ONLY

REGISTERED PROFESSIONAL ENGINEER JOHN M. SIOCHI 20532 Exp. 9-30-17 ELECTRICAL STATE OF CALIFORNIA

FRISCH ENGINEERING, INC.
CONSULTING ELECTRICAL ENGINEERS
13405 FOLSOM BLVD, UNIT 600
FOLSOM, CA 95630
PH 916 353 1025
WWW.FRISCHENGINEERING.COM

ARCADIS

NO.	DATE	DESCRIPTION	GM/SPEC	DWN	CHKD	SUPV	APVD BY
1	11/18/15	FINAL DESIGN		MBY	TPF	JMS	RAO
0	9/8/14	PRE-FINAL (90%) DESIGN		MBY		TPF	

REVISIONS

APPROVED BY: RAO

SO	
SUPV	JMS
DSGN	MBY
DWN	MBY
CHKD	TPF
OK	JMS
DATE	
SCALES	N/A

TOPOCK GROUNDWATER REMEDIATION PROJECT
TRANSWESTERN BENCH ELECTRICAL SITE PLAN
GAS TRANSMISSION & DISTRIBUTION
PACIFIC GAS AND ELECTRIC COMPANY
SAN FRANCISCO, CALIFORNIA

MICROFILM	
BILL OF MATL	
DWG LIST	
SUPSDS	
SUPSD BY	
SHEET NO.	of SHEETS
E-08-01	REV 0

PLOT DATE: Oct 30, 2015 PLOT TIME: 11:47:21am
FILENAME: E-08-01.dwg
N1808

ELECTRICAL PLAN NOTES:

1. SEE ELECTRICAL PLAN NOTES ON DRAWING E-00-02.

DRAWING REFERENCED NOTES:

1. CONDUIT ROUTE AND PULLBOX LOCATIONS SHOWN ARE APPROXIMATE. COORDINATE CONDUIT ROUTE AND PULLBOX LOCATIONS WITH DWGS C-07-69 THROUGH C-07-82 AND DWGS C-07-52 THROUGH C-07-59.
2. 12 KV DIRECT BURY CABLE TO TERMINATE ON SECTIONALIZING EQUIPMENT IN UNDERGROUND PULLBOX.

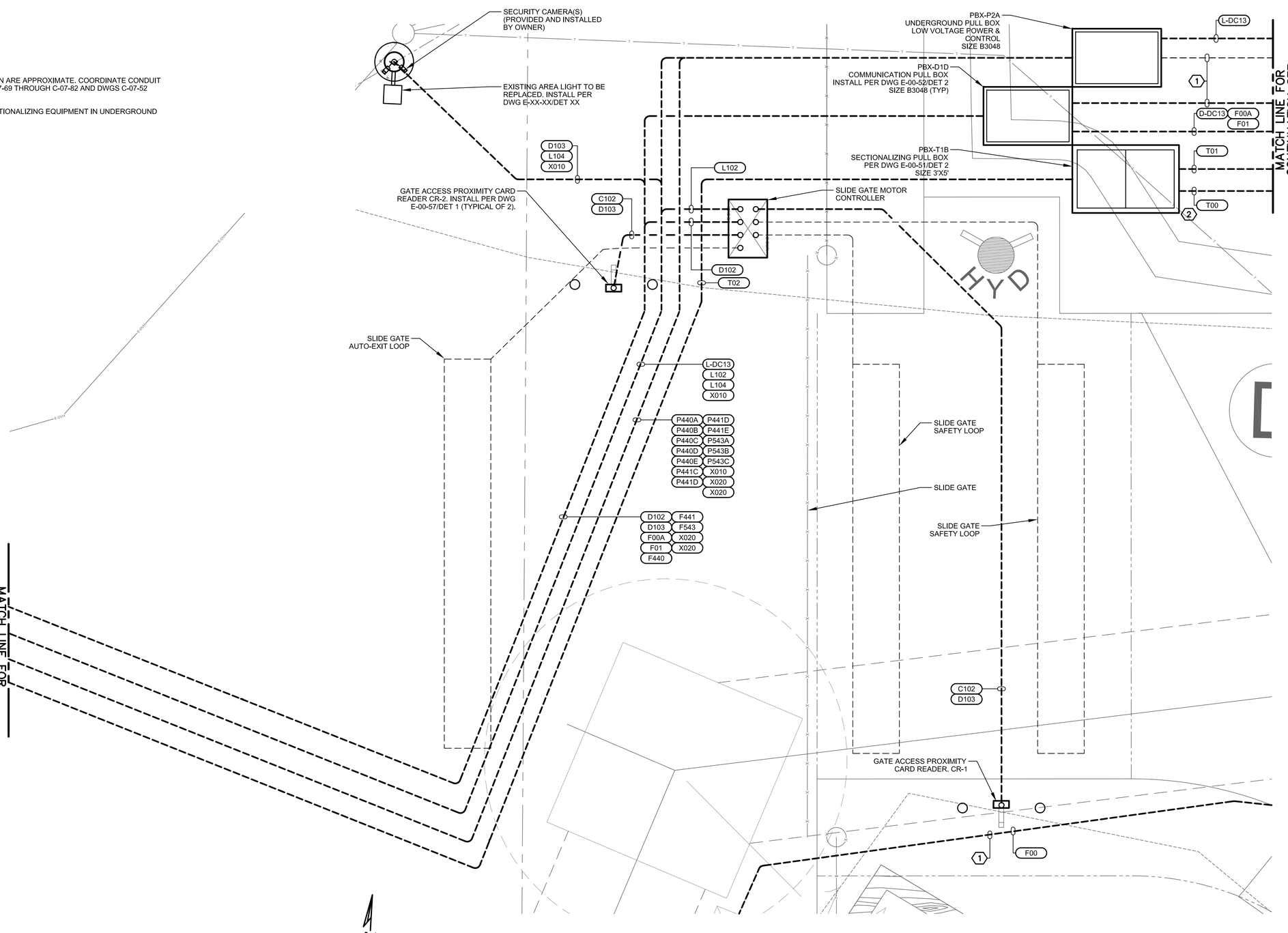

TRANSWESTERN BENCH ELECTRICAL SITE PLAN 1

0 3/8 3/4 1-1/8

SCALE: 3/8"=1'

- FINAL DESIGN - FOR AGENCY APPROVAL ONLY

REGISTERED PROFESSIONAL ENGINEER JOHN M. SIOOTA 20532 Exp. 9-30-17 ELECTRICAL STATE OF CALIFORNIA

FRISCH ENGINEERING, INC.
CONSULTING ELECTRICAL ENGINEERS
13405 FOLSOM BLVD, UNIT 600
FOLSOM, CA 95630
PH 916 353 1025
WWW.FRISCHENGINEERING.COM

ARCADIS

NO.	DATE	DESCRIPTION	GM/SPEC	DWN	CHKD	SUPV	APVD BY
1	11/18/15	FINAL DESIGN	MBY	TPF	JMS	RAO	
0	9/8/14	PRE-FINAL (90%) DESIGN	MBY			TPF	

REVISIONS

APPROVED BY	
RAO	ISO
	SUPV JMS
	DSGN MBY
	DWN MBY
	CHKD TPF
	OK JMS
	DATE
	SCALES N/A

TOPOCK GROUNDWATER REMEDIATION PROJECT
TRANSWESTERN BENCH
PARTIAL ELECTRICAL SITE PLAN
GAS TRANSMISSION & DISTRIBUTION
PACIFIC GAS AND ELECTRIC COMPANY
SAN FRANCISCO, CALIFORNIA

MICROFILM	
BILL OF MATL	
DWG LIST	
SUPSDS	
SUPSD BY	
SHEET NO. of SHEETS	
E-08-02	REV 0

PLOT DATE: Oct 30, 2015 PLOT TIME: 11:47:08am
FILENAME: E-08-01.dwg
N1808

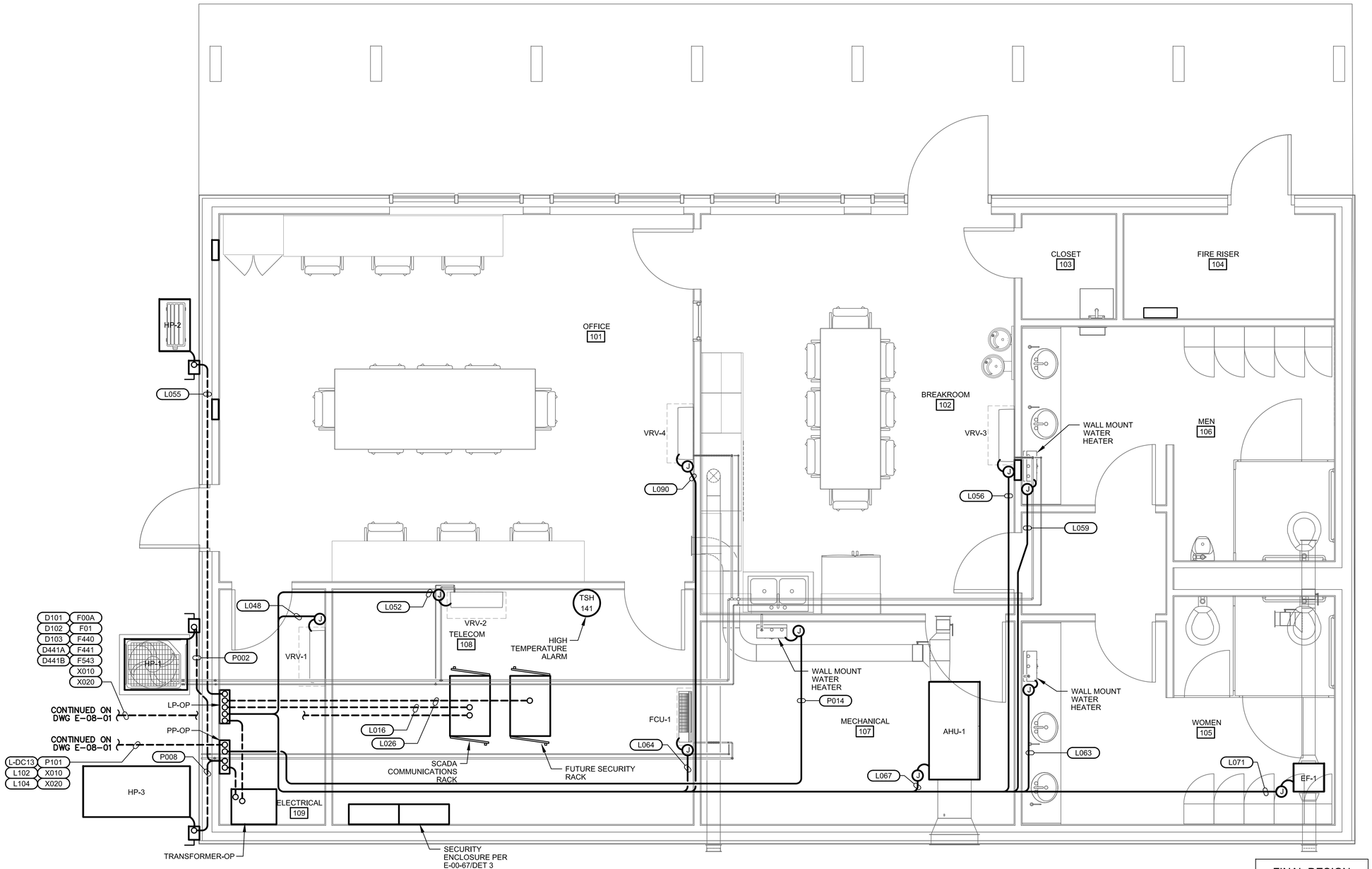

TRANSWESTERN BENCH OPERATIONS BUILDING POWER PLAN

0 2.66 5.33 8.00

SCALE: 3/8"=1'

- FINAL DESIGN -
FOR AGENCY
APPROVAL ONLY

REGISTERED PROFESSIONAL ENGINEER
JOHN M. SIOCHI
20532
Exp. 9-30-17
ELECTRICAL
STATE OF CALIFORNIA

ELECTRICAL PLAN NOTES:

1. SEE ELECTRICAL PLAN NOTES ON DRAWING E-00-02.

FRISCH ENGINEERING, INC.
CONSULTING ELECTRICAL ENGINEERS
13405 FOLSOM BLVD, UNIT 600
FOLSOM, CA 95630
PH 916 353 1025
WWW.FRISCHENGINEERING.COM

ARCADIS

NO.	DATE	DESCRIPTION	GM/SPEC	DWN	CHKD	SUPV	APVD BY
1	11/18/15	FINAL DESIGN	MBY	TPF	JMS	RAO	
0	9/8/14	PRE-FINAL (90%) DESIGN	MBY			TPF	

REVISIONS

APPROVED BY	
RAO	

SO	
SUPV	JMS
DSGN	MBY
DWN	MBY
CHKD	TPF
OK	JMS
DATE	
SCALES	N/A

TOPOCK GROUNDWATER REMEDIATION PROJECT

TRANSWESTERN BENCH BUILDING POWER PLAN

GAS TRANSMISSION & DISTRIBUTION

PACIFIC GAS AND ELECTRIC COMPANY
SAN FRANCISCO, CALIFORNIA

MICROFILM	
BILL OF MATL	
DWG LIST	
SUPSDS	
SUPSD BY	
SHEET NO. of SHEETS	
E-08-03	REV 0

PLOT DATE: Oct 30, 2015 PLOT TIME: 11:41:39am

FILENAME: E-08-03.dwg

N1808

NOTES REFERENCED IN DRAWING:

1. FURNISH AND LOCATE NEMA 1 SCREW COVER JUNCTION BOX ON WALL AT 54" AFF. BOX TO BE 12"x12"x4" AND RECESSED IN WALL.
2. DATA RECEPTACLE WITH 4 CAT 6 (TA-568A) FEMALE RJ-45 RECEPTACLES EACH, TYP. (WHT, BLU, RED, BLK) MOUNTED AT 18" AFF UNLESS OTHERWISE NOTED.. HOME RUN CABLES TO COMMUNICATION PANEL FROM EACH LOCATION. LABEL WIRING WITH ROOM NUMBER-RECEPT NUMBER. FLUSH FACEPLATE WITH BUILT-IN CABINETS WHERE APPLICABLE.
3. FURNISH 1 CAT 6 CABLE WITH TA568A MALE RJ-45 PLUG AND ONE CAT 6 CABLE FOR 12VDC. BOTH ARE FOR CARD READER CONNECTION. HOME RUN CABLES TO COMMUNICATION RACK IN TELECOM ROOM 108.
4. LOCATE FIXTURE CENTERED ON CEILING BEAM.
5. LOCATE FIXTURE CENTERED BETWEEN CEILING BEAMS.

GENERAL NOTES THAT APPLY TO LIGHTING AND RECEPTACLE PLAN.

1. THESE NOTES SHALL APPLY TO ALL EQUIPMENT OR FIXTURES WITH ELECTRICAL CONNECTIONS BUT WITHOUT CONDUITS SHOWN, CONDUIT NUMBERS, OR NOT LISTED IN SCHEDULE.
2. PROVIDE AND INSTALL NECESSARY WIRES IN SURFACE MOUNT 1/2" (MINIMUM) CONDUIT OR TYPE MC CABLE FOR FOR ELECTRICAL FIXTURE ARRANGEMENT AS SHOWN. MAXIMUM 3 CIRCUITS PER CONDUIT SECTION OVER 24" IN LENGTH. CONDUITS SHALL NOT EXCEED 40% FILL.
3. SWITCH TYPE: D= SLIDE DIMMER SWITCH, M= MOTION DETECTOR, 3= 3-WAY OR PER SCHEDULE.
4. NON-EXPOSED CONDUIT/WIRING MAY BE TYPE MC. EXPOSED CONDUIT SHALL BE EMT AND ONLY LOCATED EXPOSED WHERE ABSOLUTELY NECESSARY.
5. DEVICE BOXES AND CONDUIT BODIES SHALL BE STAMPED STEEL.
6. CONDUCTORS SHALL BE COPPER TYPE THHN, SOLID, #12 AWG (MINIMUM).
7. MOUNT CONDUITS USING UL LISTED STRAPS AND CLAMPS.
8. USE SS EXPANSION WEDGE ANCHORS OR WOOD SCREWS AS NECESSARY FOR EQUIPMENT MOUNTING.
9. EXPOSED CONDUIT SHALL BE PAINTED WITH WALL AND/OR CEILING.
10. PROVIDE AND INSTALL FIXTURES PER SCHEDULE THIS PAGE, QUANTITY AS SHOWN IN DRAWINGS.
11. PROVIDE AND INSTALL ALL DEVICE BOXES, JUNCTION BOXES, RECEPTACLES, SWITCHES, AND COVERS. MOUNTING LOCATIONS AND HEIGHTS SHALL COMPLY WITH DRAWING A-08-11 UNLESS OTHERWISE NOTED.
12. RECEPTACLES TO BE GROUND FAULT INTERRUPTER (GFI) TYPE AND WEATHERPROOF (WP) WHERE SHOWN.
13. SEE ELECTRICAL SYMBOLS AND ABBREVIATIONS DRAWING FOR SYMBOL DEFINITION.
14. ALL WORK SHALL CONFORM TO LOCAL CODES AND 2010 NATIONAL ELECTRIC CODE.

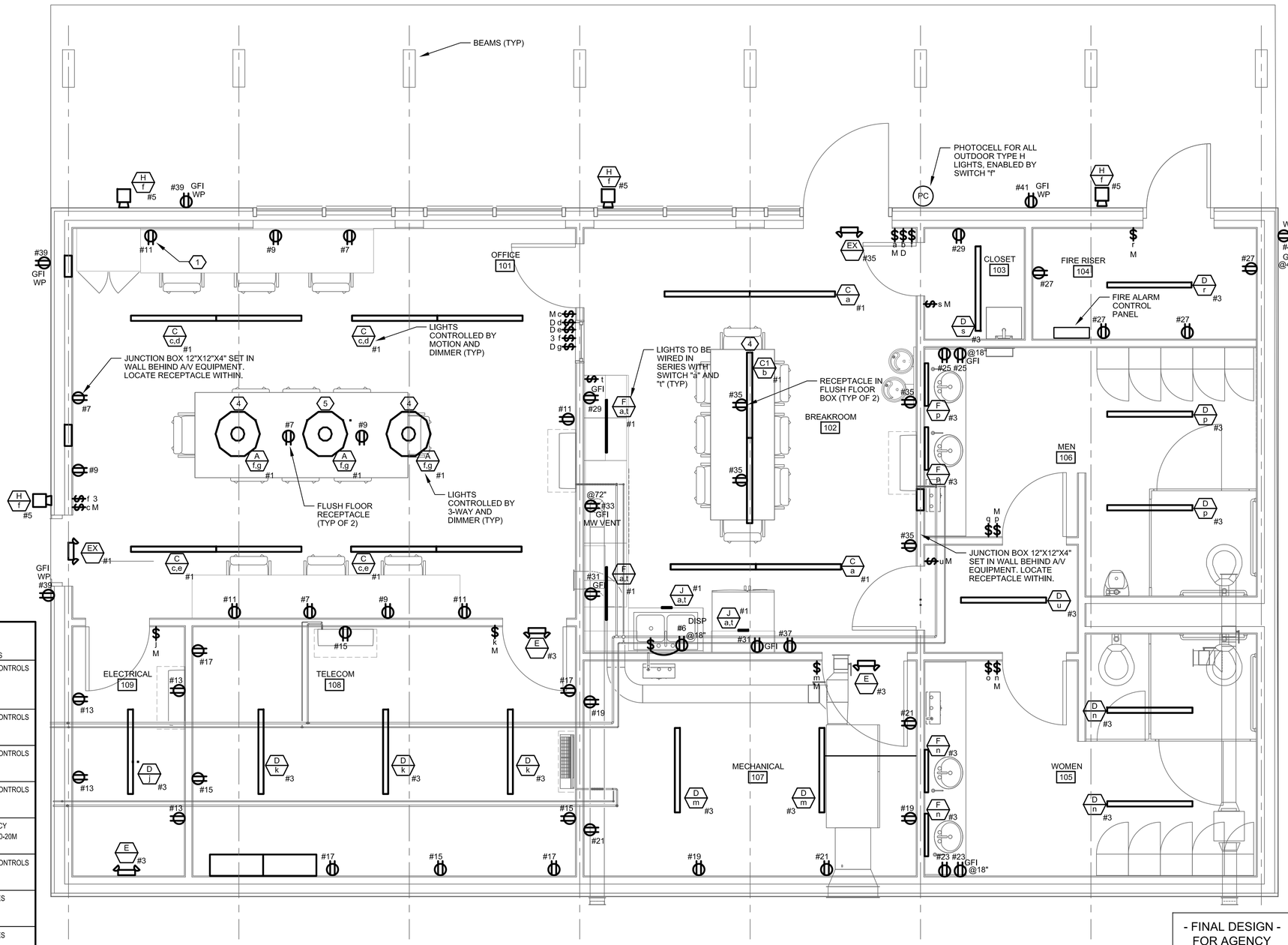

FIXTURE SCHEDULE

CODE LETTER	FIXTURE TYPE	FIXTURE LAMPS	WATTS/ FIXTURE	MANUFACTURER OR APPROVED EQUAL	MOUNTING ARRANGEMENT	NOTES
A	ROUND PENDANT, 2 FT DIAMETER WITH WHITE INTERIOR AND FROSTED FLAT ACRYLIC LENS NATURAL ALUMINUM FINISH	LED 3200 LMS 3500K	68W 120 VAC	PRUDENTIAL P4020-LED35- LO-WA-YXX-D1-SC-UNV-MPCA/144"-X3-DM10	SUSPENDED MOUNT FIXTURE AT 8 FEET 6 INCHES	WITH DIMMER CONTROLS
B	LINEAR PENDANT, 4 FT WHITE ANODIZED FINISH EXTRUDED ALUMINUM CONSTRUCTION	LED 407 LPF 3500K	16W 120 VAC	STILE LLCR-A-048-L27.2WA-35K-120-4'-BUL/PSC-120-AN04-DML	SUSPENDED MOUNT FIXTURE AT 9 FEET	WITH DIMMER CONTROLS
C	LINEAR PENDANT, 8 FT WHITE ANODIZED FINISH EXTRUDED ALUMINUM CONSTRUCTION	LED 3500K	32W 120 VAC	STILE LLCR-A-096-L32-35K-120-8'-BUL/PSC-120-AN04-DML	SUSPENDED MOUNT FIXTURE AT 9 FEET	WITH DIMMER CONTROLS
C1	LINEAR PENDANT, 8 FT WHITE ANODIZED FINISH EXTRUDED ALUMINUM CONSTRUCTION	LED 3500K	32W 120 VAC	STILE LLCR-A-096-L54.4-35K-120-8'-BUL/PSC-120-AN04-DML	SUSPENDED MOUNT FIXTURE AT 8 FEET 6 INCHES	WITH DIMMER CONTROLS
D	LENSED LED STRIPLIGHT, 4 FT WITH DIFFUSE LENS WHITE ENAMEL FINISH	LED 3000 LMS 5000K	72W 120 VAC	LITHONIA ZL2N-L48-3000LM-MDD-MVOLT 5000K-80CRI-WH-WG-ZACVH120	SUSPENDED MOUNT FIXTURE AT 9 FEET	WITH OCCUPANCY SENSOR LSXR-10-20M IF SHOWN
J	UNDERCABINET STRIPLIGHT, 7 IN BLACK FINISH UNILUME	LED 430 LPF 2700K	5W 120 VAC	TECH 700UCFDW-07-80-3500K-W-LED	SURFACE MOUNT FIXTURE	WITH DIMMER CONTROLS
E	EMERGENCY LIGHT PACK WITH INTEGRAL BATTERY CHARGER THERMOPLASTIC ENCLOSURE	2 LED 3W 3.6 VOLT	6W 120 VAC	LITHONIA ELM2 LED HO	WALL MOUNT AT 7.5 FT	NICAD BATTERIES
EX	EMERGENCY AND EXIT LIGHT PACK WITH INTEGRAL BATTERY CHARGER THERMOPLASTIC ENCLOSURE LED LAMPS WITH RED LED SIGN	2 LED 3W 9.6 VOLT	10W 120 VAC	LITHONIA LHQM LED HO	WALL MOUNT AT 7.5 FT	NICAD BATTERIES
F	UNDERCABINET STRIPLIGHT, 30 IN BLACK FINISH UNILUME	LED 430 LPF 2700K	18W 120 VAC	TECH 700UCFDW-30-80-3500K-W-LED	SURFACE MOUNT FIXTURE	WITH DIMMER CONTROLS
G	GLASS SHADE LINEAR, WHITE ACRYLIC DIFFUSER LENS SATIN NICKEL FINISH	LED 920 LMS 3000K	20W 120 VAC	TECH 700BCLYNN-W-S-LED	WALL BRACKET & SURFACE MOUNT FIXTURE	
H	WALL MOUNT SQUARE DOWNLIGHT DIE-CAST ALUMINUM HOUSING BLACK FINISH	LED 892 LMS 4000K	17W 120 VAC	TANGO LIGMAN USA UTA-31295-W-W40	WALL MOUNT FIXTURE AT 8 FEET	WITH REMOTE PHOTOCELL INTERMATIC K1121

TRANSWESTERN BENCH OPERATIONS BUILDING LIGHTING PLAN

0 2.67 5.33 8.01

SCALE: 3/8"=1'

- FINAL DESIGN - FOR AGENCY APPROVAL ONLY

REGISTERED PROFESSIONAL ENGINEER JOHN M. SIOCO 20532 Exp. 9-30-17 ELECTRICAL STATE OF CALIFORNIA

FRISCH ENGINEERING, INC.
CONSULTING ELECTRICAL ENGINEERS
13405 FOLSOM BLVD, UNIT 600
FOLSOM, CA 95630
PH 916 353 1025
WWW.FRISCHENGINEERING.COM

ARCADIS

NO.	DATE	DESCRIPTION	GM/SPEC	DWN	CHKD	SUPV	APVD BY
1	11/18/15	FINAL DESIGN		MBY	TPF	JMS	RAO
0	9/8/14	PRE-FINAL (90%) DESIGN		MBY			TPF

REVISIONS

APPROVED BY	
RAO	

SO	
SUPV	JMS
DSGN	MBY
DWN	MBY
CHKD	TPF
OK	JMS
DATE	
SCALES	N/A

TOPOCK GROUNDWATER REMEDIATION PROJECT
TRANSWESTERN BENCH OPERATIONS BUILDING LIGHTING & RECEPTACLE PLAN
GAS TRANSMISSION & DISTRIBUTION
PACIFIC GAS AND ELECTRIC COMPANY
SAN FRANCISCO, CALIFORNIA

MICROFILM	
BILL OF MATL	
DWG LIST	
SUPSDS	
SUPSD BY	
SHEET NO. of SHEETS	
E-08-04	REV 0

PLOT DATE: Oct 30, 2015 PLOT TIME: 11:40:58am
FILENAME: E-08-03.dwg

N1808

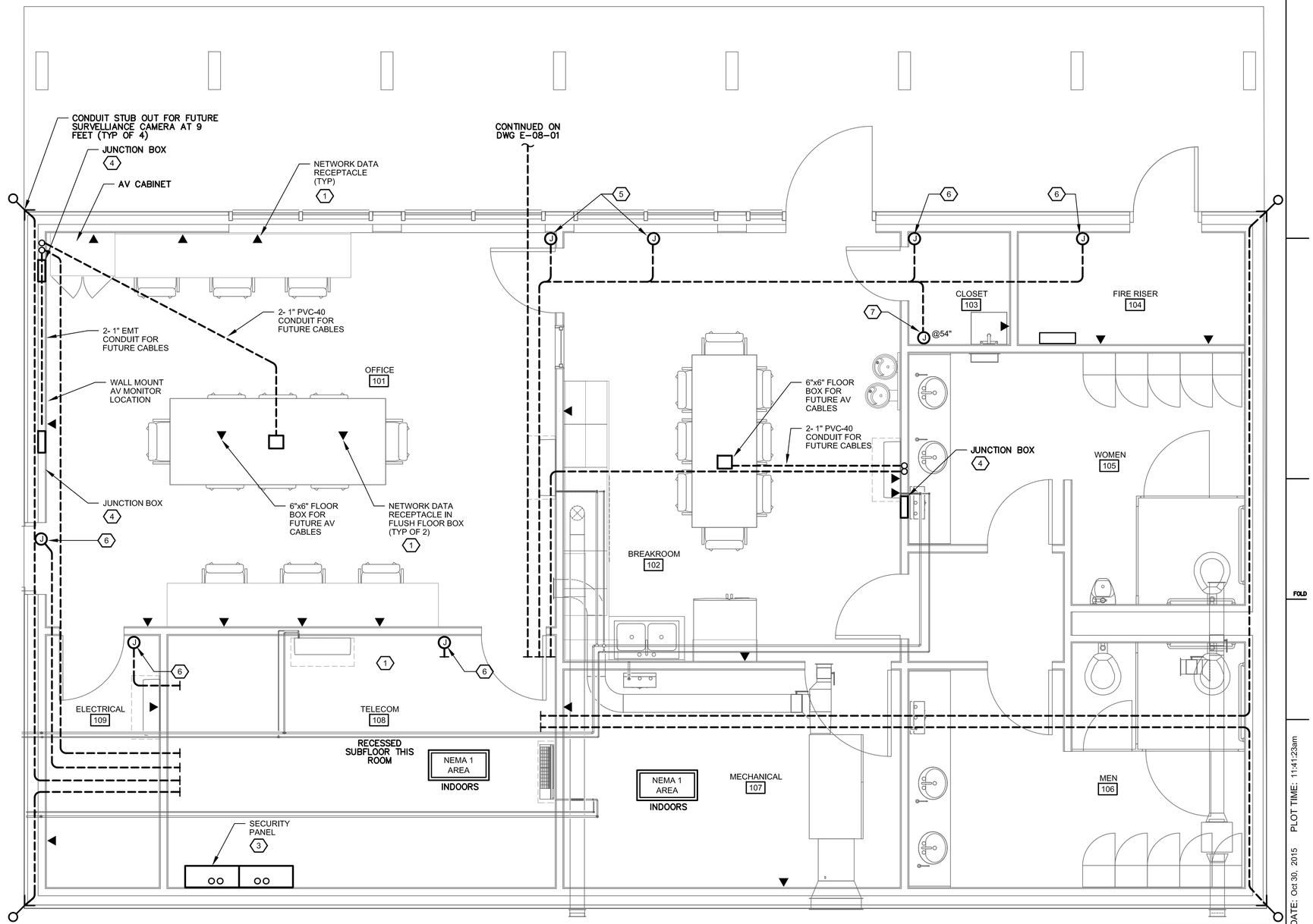

NOTES REFERENCED IN DRAWING:

1. THIS ROOM TO HAVE RAISED PANEL FLOOR. STUB UP ELECTRICAL AND DATA BELOW FLOOR AND ROUTE AS REQUIRED. INSTALL RECEPTACLES BELOW FLOOR FOR NETWORK PANELS.
2. DATA RECEPTACLE WITH 4 CAT 6 (TA-568A) FEMALE RJ-45 RECEPTACLES EACH, TYP. (WHT, BLU, RED, BLK) MOUNTED AT 18" AFF UNLESS OTHERWISE NOTED.. HOME RUN CABLES TO COMMUNICATION PANEL FROM EACH LOCATION. LABEL WIRING WITH ROOM NUMBER-RECEPT NUMBER. FLUSH FACEPLATE WITH BUILT-IN CABINETS WHERE APPLICABLE.
3. FURNISH 4 VERTICAL 1" EMT CONDUITS TO SUBFLOOR FOR WIRING.
4. FURNISH AND LOCATE NEMA 1 SCREW COVER JUNCTION BOX ON WALL AT 54" AFF. BOX TO BE 12"x12"x4" AND RECESSED IN WALL. LOCATE COMMUNCATION AND POWER RECEPTACLE INSIDE.
5. FURNISH SINGLE GANG BOX NEAR TOP CORNER OF WINDOW FOR GLASS BREAK SENSOR.
6. FURNISH JUNCTION BOX AND CONDUITS TO SUPPORT ACCESS CONTROL DOOR PER DWG E55 DET 2
7. FURNISH SINGLE GANG BOX FOR ALARM KEYPAD.

ELECTRICAL PLAN NOTES:

1. SEE ELECTRICAL PLAN NOTES ON DRAWING E-00-02.

TRANSWESTERN BENCH OPERATIONS BUILDING NETWORK & SECURITY PLAN

0 2.67 5.33 8.01

SCALE: 3/8"=1'

- FINAL DESIGN - FOR AGENCY APPROVAL ONLY

REGISTERED PROFESSIONAL ENGINEER JOHN M. SIDDLE 20532 Exp. 9-30-17 ELECTRICAL STATE OF CALIFORNIA

FRISCH ENGINEERING, INC.
CONSULTING ELECTRICAL ENGINEERS
13405 FOLSOM BLVD, UNIT 600
FOLSOM, CA 95630
PH 916 353 1025
WWW.FRISCHENGINEERING.COM

ARCADIS

NO.	DATE	DESCRIPTION	GM/SPEC	DWN	CHKD	SUPV	APVD BY
1	11/18/15	FINAL DESIGN		MBY	TPF	JMS	RAO
0	9/8/14	PRE-FINAL (90%) DESIGN		MBY		TPF	

REVISIONS

APPROVED BY	
RAO	

SO	
SUPV	JMS
DSGN	MBY
DWN	MBY
CHKD	TPF
OK	JMS
DATE	
SCALES	N/A

TOPOCK GROUNDWATER REMEDIATION PROJECT
TRANSWESTERN BENCH SECURITY PLAN
GAS TRANSMISSION & DISTRIBUTION
PACIFIC GAS AND ELECTRIC COMPANY
SAN FRANCISCO, CALIFORNIA

MICROFILM	
BILL OF MATL	
DWG LIST	
SUPSDS	
SUPSD BY	
SHEET NO.	of SHEETS
E-08-05	REV 0

PLOT DATE: Oct 30, 2015 PLOT TIME: 11:41:23am
FILENAME: E-08-03.dwg

N1808

PANEL "PP-OP"

LOCATION: ELECTRICAL ROOM
ENCLOSURE: SURFACE
AIC RATING: 10 KAIC

277 / 480 VOLTS, 3 PHASE, 4 WIRE
200 AMP BUS
200 AMP MAIN BREAKER

BKR NO.	DESCRIPTION	LOAD VA	PHASE AMPS A	B	C	AMPS/ POLE	BKR NO.
1	TRANSFORMER OP	10000	36.1			125/3	1
3		10000		36.1			3
5		10000			36.1		5
7	SPACE	0	0.0				7
9		0		0.0			9
11		0			0.0		11
13	SPACE	0	0.0				13
15		0		0.0			15
17		0			0.0		17
19	SPACE	0	0.0				19
21		0		0.0			21
23		0			0.0		23
25	SPACE	0	0.0				25
27		0		0.0			27
29		0			0.0		29
31	SPACE	0	0.0				31
33		0		0.0			33
35		0			0.0		35
37	SPACE	0	0.0				37
39		0		0.0			39
41		0			0.0		41

BKR NO.	AMPS/ POLE	PHASE AMPS A	B	C	LOAD VA	DESCRIPTION	BKR NO.
2	30/3	13.6			3780	HEAT PUMP HP-1	2
4			13.6		3780		4
6				13.6	3780		6
8	30/3	2.9			795	HEAT PUMP HP-3	8
10			2.9		795		10
12				2.9	795		12
14	100/3	83.0			23000	WATER HEATER EWH-2	14
16			83.0		23000		16
18				83.0	23000		18
20	15/3	0.0			0	SPARE	20
22			0.0		0		22
24				0.0	0		24
26	30/3	0.0			0	SPARE	26
28			0.0		0		28
30				0.0	0		30
32	30/3	0.0			0	SPARE	32
34			0.0		0		34
36				0.0	0		36
38	30/3	0.0			0	SPARE	38
40			0.0		0		40
42				0.0	0		42

PHASE	A	B	C
LEFT SIDE AMPS	36.1	36.1	36.1
LEFT SIDE KVA	10.00	10.00	10.00
TOTAL PHASE KVA	37.58	37.58	37.58
TOTAL PHASE AMPS	135.6	135.6	135.6
% OF AVERAGE	100	100	100

NEUTRAL

GROUND

A	B	C	PHASE
99.5	99.5	99.5	RIGHT SIDE AMPS
27.58	27.58	27.58	RIGHT SIDE KVA

112.73	TOTAL KVA
135.59	TOTAL AMPS @ 480V, 3P
0.80	DEMAND FACTOR
90.18	LOAD KVA

NOTES:
1 MEANS OF WIRE COLOR CODING SHALL BE POSTED ON PANELBOARD PER NEC 210 (4)
2 ASTERISK (*) DENOTES GFI BREAKER REQUIRED WITH 5 MA SENSITIVITY
3 TILDA (~) DENOTES GFI BREAKER REQUIRED WITH 30 MA SENSITIVITY

PANEL "LP-CT"

LOCATION: TRANSWESTERN BENCH
ENCLOSURE: NEMA 1A
AIC RATING: 22 KAIC

120 / 240 VOLTS, 1 PHASE, 3 WIRE
225 AMP BUS
150 AMP MAIN BREAKER

BKR NO.	DESCRIPTION	LOAD VA	LINE AMPS		AMPS/ POLE	BKR NO.
1	CONSTRUCTION TRAILER 1	4500	37.5		50/2	1
3		4500		37.5		3
5	CONSTRUCTION TRAILER 3	4500	37.5		50/2	5
7		4500		37.5		7
9	SPARE	0	0.0		40/2	9
11		0		0.0		11
13	CONVENIENCE RECEPTACLE	500	4.2		20/1*	13
15	SPARE	0		0.0	20/1	15
17	SPARE	0	0.0		20/1	17

BKR NO.	AMPS/ POLE	LINE AMPS		LOAD VA	DESCRIPTION	BKR NO.
2	50/2	37.5		4500	CONSTRUCTION TRAILER 2	2
4			37.5	4500		4
6	50/2	25.0		3000	WELDER	6
8			25.0	3000		8
10	40/2	0.0		0	SPARE	10
12			0.0	0		12
14	20/1	0.0		0	SPARE	14
16	20/1		0.0	0	SPARE	16
18	20/1	0.0		0	SPARE	18

PHASE	A	B
LEFT SIDE AMPS	79.17	75.00
LEFT SIDE KVA	9.50	9.00
TOTAL PHASE KVA	17.00	16.50
TOTAL PHASE AMPS	142	138
% OF AVERAGE	101	99

NEUTRAL

GROUND

A	B	PHASE
62.50	62.50	RIGHT SIDE AMPS
7.50	7.50	RIGHT SIDE KVA

33.50	TOTAL KVA
139.58	TOTAL AMPS @ 240V, 1P
1.00	DIVERSITY FACTOR
33.50	LOAD KVA

NOTES:
1 MEANS OF WIRE COLOR CODING SHALL BE POSTED ON PANELBOARD PER NEC 210 (4)
2 ASTERISK (*) DENOTES GFI BREAKER REQUIRED WITH 5 MA SENSITIVITY
3 TILDA (~) DENOTES GFI BREAKER REQUIRED WITH 30 MA SENSITIVITY

PANEL "LP-OP"

LOCATION: ELECTRICAL ROOM
ENCLOSURE: SURFACE
AIC RATING: 10 KAIC

120 / 208 VOLTS, 3 PHASE, 4 WIRE
200 AMP BUS
200 AMP MAIN BREAKER

BKR NO.	DESCRIPTION	LOAD VA	PHASE AMPS A	B	C	AMPS/ POLE	BKR NO.
1	INDOOR LIGHTS	1142	9.5			20/1	1
3	INDOOR LIGHTS	1176		9.8		20/1	3
5	OUTDOOR LIGHTS	288			2.4	20/1	5
7	RECEPTACLES - OFFICE	800	6.7			20/1	7
9	RECEPTACLES - OFFICE	800		6.7		20/1	9
11	RECEPTACLES - OFFICE	800			6.7	20/1	11
13	RECEPTACLES - ELEC ROOM	800	6.7			20/1	13
15	RECEPTACLES - TELECOM	800		6.7		20/1	15
17	RECEPTACLES - TELECOM	800			6.7	20/1	17
19	RECEPTACLES - MECHANICAL	600	5.0			20/1	19
21	RECEPTACLES - MECHANICAL	600		5.0		20/1	21
23	RECEPTACLES - MENS BATHROOM	200			1.7	20/1	23
25	RECEPTACLES - WOMENS BATHROOM	200	1.7			20/1	25
27	RECEPTACLES - FIRE RISER	800		6.7		20/1	27
29	RECEPTACLES - CLOSET	200			1.7	20/1	29
31	RECEPTACLES - KITCHEN	400	3.3			20/1	31
33	RECEPTACLES - KITCHEN	200		1.7		20/1	33
35	RECEPTACLES - BREAKROOM FLOOR	400			3.3	20/1	35
37	REFRIDGERATOR	800	6.7			20/1	37
39	OUTDOOR RECEPTACLE	0		0.0		20/1	39
41	OUTDOOR RECEPTACLE	0			0.0	20/1	41
43	SPARE	0	0.0			20/3	43
45		0		0.0			45
47		0			0.0		47
49	SPARE	0	0.0			20/3	49
51		0		0.0			51
53		0			0.0		53
55	HEAT PUMP HP-2	1000	8.3			20/2	55
57		1000		8.3			57
59	WATER HEATER WH-1	7280			60.7	100/2	59
61		7280	60.7				61
63	WATER HEATER WH-3	7280		60.7		1-Feb	63
65		7280			60.7		65
67	AIR HANDLING UNIT AHU-1	3900	32.5			50/2	67
69		3900		32.5			69
71	EXHAIST FAN EF-1	2500			20.8	30/1	71

BKR NO.	AMPS/ POLE	PHASE AMPS A	B	C	LOAD VA	DESCRIPTION	BKR NO.
2	20/1	7.5			900	GATE OPERATOR	2
4	20/1		2.2		265	SITE LIGHT	4
6	20/1			10.0	1200	DISPOSAL	6
8	20/1	3.3			0	SPARE	8
10	20/1		0.0		0	SPARE	10
12	20/1			1.7	200	SECURITY PANEL	12
14	20/1	0.4			50	EMERGENCY LIGHTS	14
16	20/1		8.3		1000	COMMUNICATIONS PANEL - SCADA UPS	16
18	20/1			1.7	200	COMMUNICATIONS PANEL - AUXILLARY	18
20	20/1	8.3			1000	COMMUNICATIONS PANEL - ADMIN UPS	20
22	20/1		0.0		0	SWBD-01 LIGHTS AND HEATERS	22
24	20/1			0.0	0	DATA COLLECTION PANEL DC-13	24
26	20/1	0.0			0	SPARE	26
28	20/1		0.0		0	SPARE	28
30	20/1			0.0	0	SPARE	30
32	20/1	0.8			100	BRANCH SELECTOR 1	32
34	20/1		0.8		100	BRANCH SELECTOR 2	34
36	20/1			2.5	300	TRAP PRIMER	36
38	20/1	5.0			600	WATER COOLER	38
40	20/2		0.0		0	SPARE	40
42				0.0	0		42
44	20/2	0.0			0	SPARE	44
46			0.0		0		46
48	20/2			0.2	22	WALL UNIT VRV-1	48
50		0.2			22		50
52	20/2		0.2		22	WALL UNIT VRV-2	52
54				0.2	22		54
56	20/2	0.4			44	WALL UNIT VRV-3	56
58			0.4		44		58
60	20/2			0.4	44	WALL UNIT VRV-4	60
62		0.4			44		62
64	20/2		7.8		935	WALL UNIT FCU-1	64
66				7.8	935		66
68	20/2	0.0			0	SPARE	68
70			0.0		0		70
72	20/1			0.0	0	SPARE	72

PHASE	A	B	C
LEFT SIDE AMPS	141.0	138.0	164.6
LEFT SIDE KVA	16.92	16.56	19.75
TOTAL PHASE KVA	20.08	18.92	22.67
TOTAL PHASE AMPS	167.4	157.7	188.9
% OF AVERAGE	98	92	110

NEUTRAL

GROUND

A	B	C	PHASE
26.3	19.7	24.4	RIGHT SIDE AMPS
3.16	2.37	2.92	RIGHT SIDE KVA

61.68	TOTAL KVA
171.19	TOTAL AMPS @ 208V, 3P
0.80	DEMAND FACTOR
49.34	LOAD KVA

NOTES:
1 MEANS OF WIRE COLOR CODING SHALL BE POSTED ON PANELBOARD PER NEC 210 (4)
2 ASTERISK (*) DENOTES GFI BREAKER REQUIRED WITH 5 MA SENSITIVITY
3 TILDA (~) DENOTES GFI BREAKER REQUIRED WITH 30 MA SENSITIVITY

- FINAL DESIGN - FOR AGENCY APPROVAL ONLY

REGISTERED PROFESSIONAL ENGINEER JOHN M. SIOCHI 20532 Exp. 9-30-17 ELECTRICAL STATE OF CALIFORNIA

FRISCH ENGINEERING, INC.
CONSULTING ELECTRICAL ENGINEERS
13405 FOLSOM BLVD, UNIT 600
FOLSOM, CA 95630
PH 916 353 1025
WWW.FRISCHENGINEERING.COM

ARCADIS

NO.	DATE	DESCRIPTION	GM/SPEC	DWN	CHKD	SUPV	APVD BY
1	11/18/15	FINAL DESIGN	MBY	TPF	JMS	RAO	
0	9/8/14	PRE-FINAL (90%) DESIGN	MBY			TPF	

REVISIONS

APPROVED BY: RAO

SO	
SUPV	JMS
DSGN	MBY
DWN	MBY
CHKD	TPF
OK	JMS
DATE	
SCALES	N/A

TOPOCK GROUNDWATER REMEDIATION PROJECT
TRANSWESTERN BENCH PANELBOARD SCHEDULES
GAS TRANSMISSION & DISTRIBUTION
PACIFIC GAS AND ELECTRIC COMPANY
SAN FRANCISCO, CALIFORNIA

MICROFILM
BILL OF MATL
DWG LIST
SUPSDS
SUPSD BY
SHEET NO. E-08-06 of SHEETS
REV 0

PLOT TIME: 3:56:47pm
PLOT DATE: Oct 29, 2015
FILENAME: E-08-06.dwg

N1808

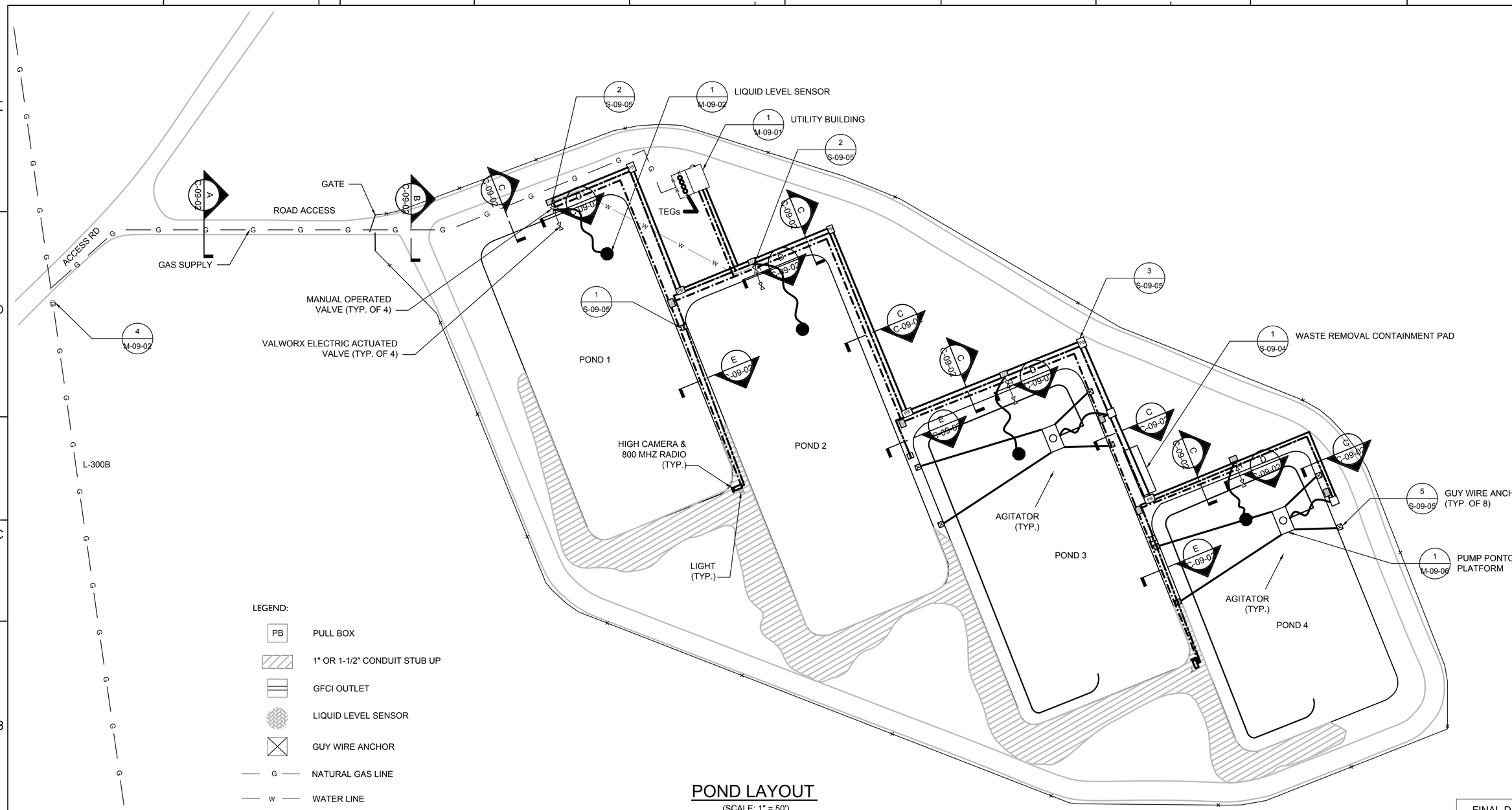

POND LAYOUT

(SCALE: 1" = 50')

- FINAL DESIGN - FOR AGENCY APPROVAL ONLY

REGISTERED PROFESSIONAL ENGINEER BENJAMIN J. WUERL C 67811 EXP 6/30/17 STATE OF CALIFORNIA

ETIC ENGINEERING

ARCADIS

NO.	DATE	DESCRIPTION	GM/SPEC	DWN	CHKD	SUPV	APVD BY
2	11/18/15	FINAL DESIGN		AJW	WLM	BW	RAO
1	12/2/14	SUPPLEMENTAL PRE-FINAL (90%) DESIGN		DSA	JLA	SS	
0	9/8/14	PRE-FINAL (90%) DESIGN		DSA	RB	RB	

REVISIONS

APPROVED BY	SO
RAO	SUPV
	DSGN
	DWN
	CHKD
	OK
	DATE
	SCALES

TOPOCK GROUNDWATER REMEDIATION PROJECT

COMPRESSOR STATION PONDS UPGRADES TRENCH DETAILS

GAS TRANSMISSION & DISTRIBUTION
PACIFIC GAS AND ELECTRIC COMPANY
SAN FRANCISCO, CALIFORNIA

MICROFILM	
BILL OF MATL	
DWG LIST	
SUPSDS	
SUPSD BY	
SHEET NO.	of SHEETS
C-09-01	REV 2

11/03/2015, 14:06, G:\Graphics\ART\TOPOCK-01\Submittal_100%\DWGs\C-Civil\C-09-01.dwg, Tab: C-09-01

N1808

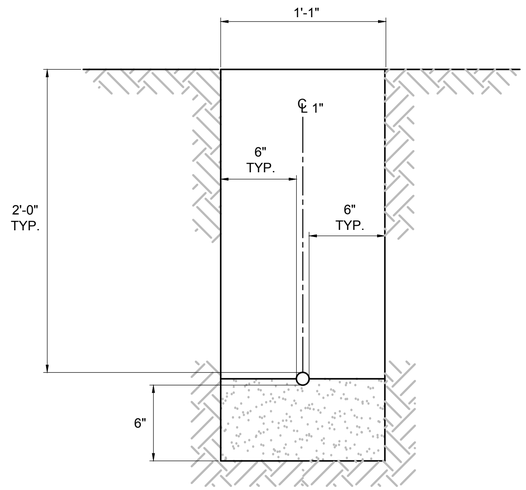

A SECTION
C-09-01 2" = 1'-0"

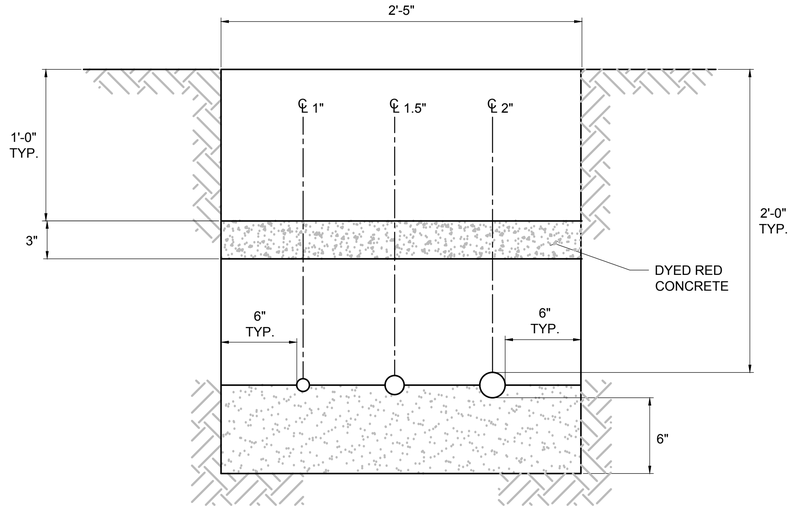

B SECTION
C-09-01 2" = 1'-0"

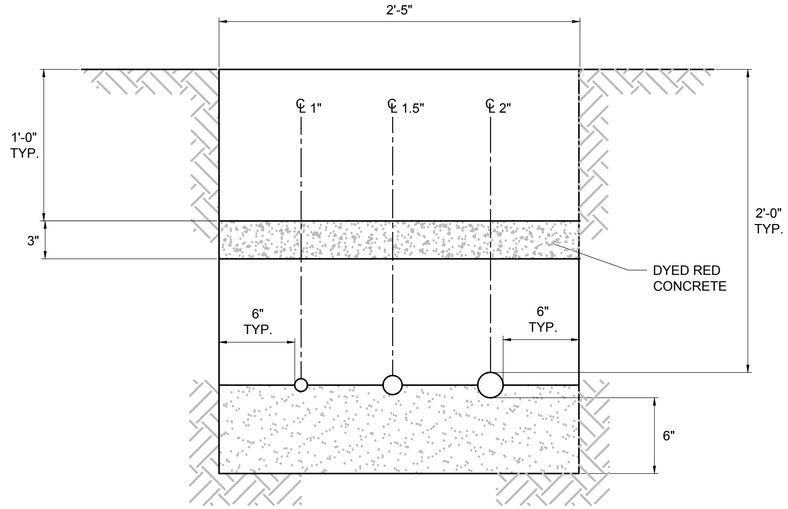

C SECTION
C-09-01 2" = 1'-0"

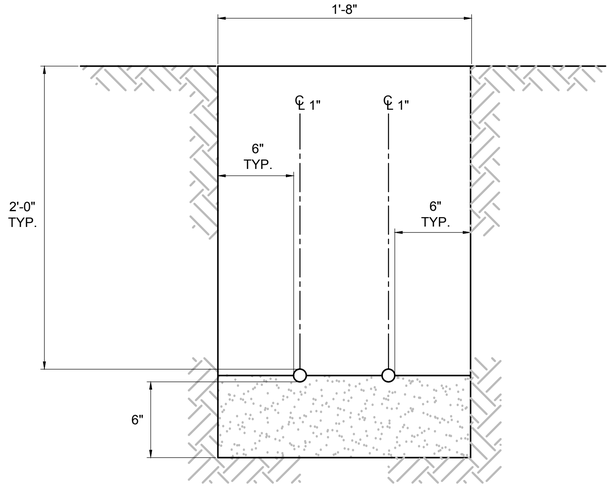

D SECTION
C-09-01 2" = 1'-0"

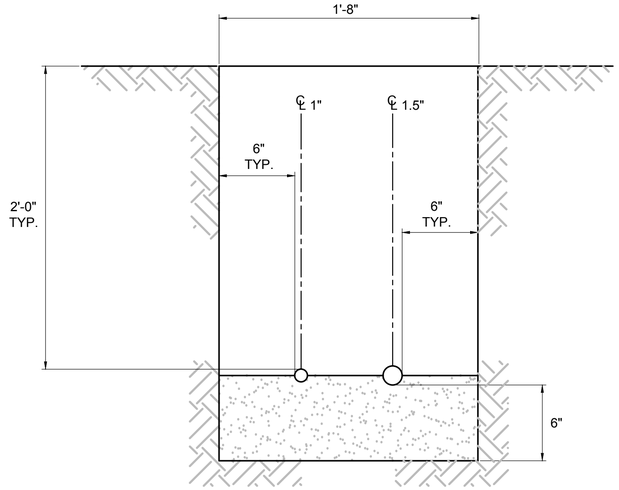

E SECTION
C-09-01 2" = 1'-0"

NOTES:

1. PIPE BEDDING SHALL E□TEND HALFWAY UP THE PIPES PER SPECIFICATION.

0 1' 2' 3'
SCALE: 2" = 1'-0"

- FINAL DESIGN -
FOR AGENCY
APPROVAL ONLY

REGISTERED PROFESSIONAL ENGINEER
BENJAMIN J. WUERL
C 67811
EXP. 6/30/17
STATE OF CALIFORNIA

ETIC ENGINEERING

ARCADIS

NO.	DATE	DESCRIPTION	GM/SPEC	DWN	CHKD	SUPV	APVD BY
1	11/18/15	FINAL DESIGN		AJW	WLM	BW	RAO
0	9/8/14	PRE-FINAL □90%□ DESIGN		DSA	RB	RB	

REVISIONS

APPROVED BY: RAO

SO
SUPV
DSGN
DWN
CHKD
OK
DATE
SCALES

TOPOCK GROUNDWATER REMEDIATION PROJECT

COMPRESSOR STATION PONDS
UPGRADES TRENCH SECTIONS

GAS TRANSMISSION & DISTRIBUTION
PACIFIC GAS AND ELECTRIC COMPANY
SAN FRANCISCO, CALIFORNIA

MICROFILM
BILL OF MATL
DWG LIST
SUPSDS
SUPSD BY
SHEET NO. of SHEETS
C-09-02
REV 1

11/03/2015, 10:22, G:\Graphics\ARTOPOCK-01\Submittal_100%\DWGs\C-Cl.ill\C-09-02.dwg, Tab: C-09-02

N1808

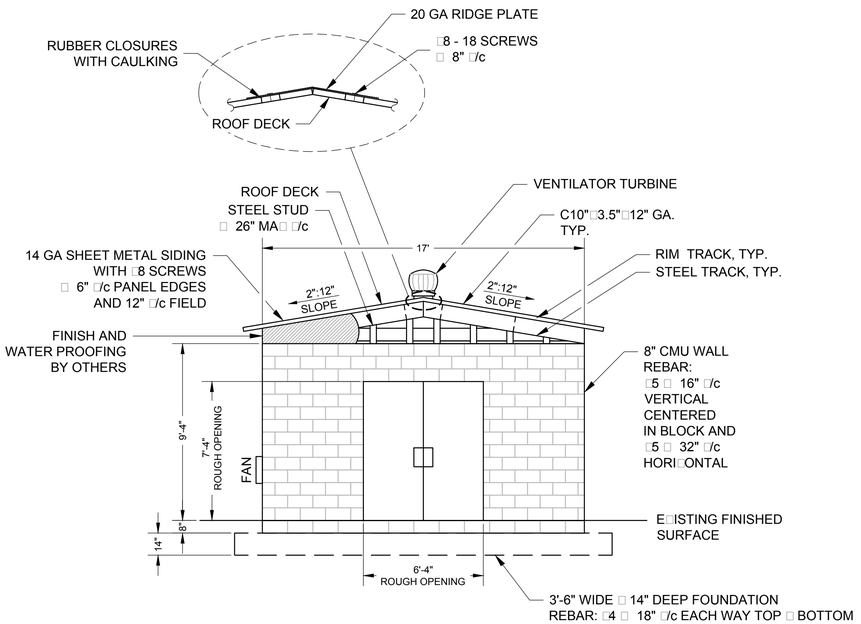

3 SIDE ELEVATION
1/4" = 1'-0"

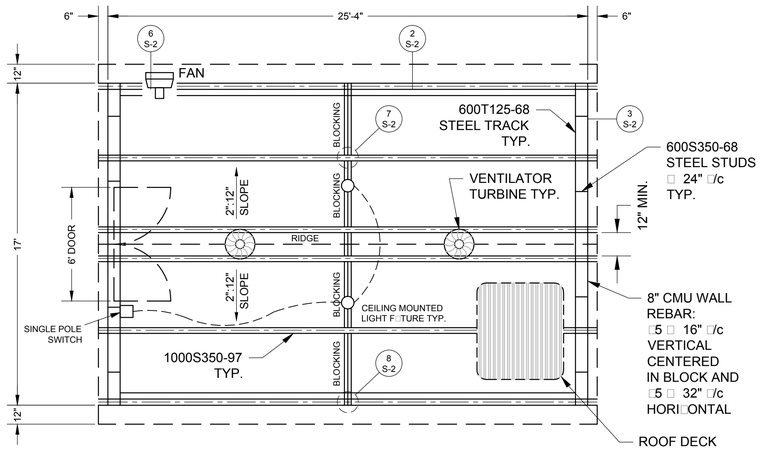

2 ROOF PLAN
1/4" = 1'-0"

GENERAL NOTES:
SEE DRAWING S-00-01 FOR ADDITIONAL GENERAL NOTES

DESIGN LOADS

RISK CATEGORY	II
ROOF LIVE LOAD	20 PSF
ROOF SNOW LOAD	0 PSF
ROOF DEAD LOAD	5 PSF

WIND

WIND SPEED	110 MPH
WIND EXPOSURE	C
Kd =	0.85
Kzt =	1.00

SEISMIC

IMPORTANCE FACTOR	1.0
SDS =	0.245
SD1 =	0.186
SEISMIC DESIGN CATEGORY	C
ORDINARY REINF. MASONRY SHEAR WALL	R = 2
SEISMIC RESPONSE COEFFICIENT	Cs = 0.123

EQUIVALENT LATERAL FORCE ANALYSIS

COLD FORMED STEEL

DESIGN PER 2007 AISI COLD FORMED STEEL MANUAL	
COLD FORMED MEMBERS AND ACCESSORIES	F = 50 KSI
ALL MEMBERS AND FASTENERS INC COATED	
SHEET METAL PER ASTM	A1003 GRADE 33 TYPE H

SPECIAL INSPECTION
- POST INSTALLED ANCHORS
- MASONRY

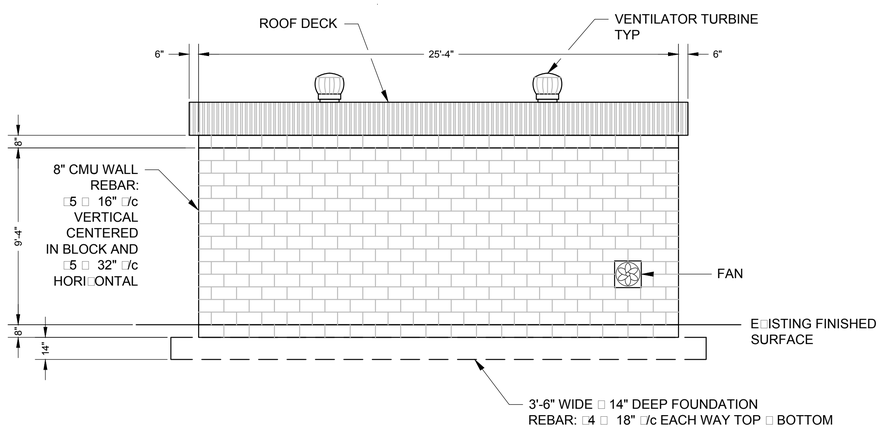

4 FRONT ELEVATION
1/4" = 1'-0"

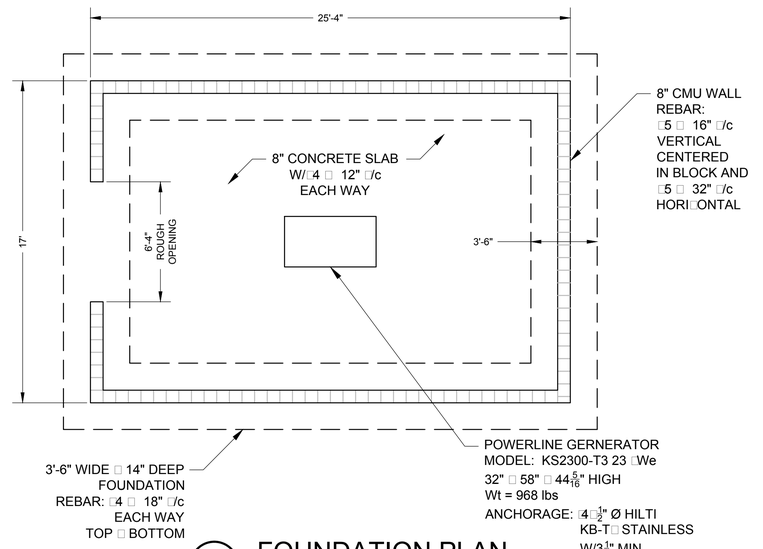

1 FOUNDATION PLAN
1/4" = 1'-0"

- FINAL DESIGN -
FOR AGENCY APPROVAL ONLY

REGISTERED PROFESSIONAL ENGINEER — REG. NO. 2287 — EXP. 31 DEC 15 — 05 NOV 15 — STRUCTURES — STATE OF CALIFORNIA

ETIC ENGINEERING

ARCADIS

NO.	DATE	DESCRIPTION	GM/SPEC	DWN	CHKD	SUPV	APVD BY
2	11/18/15	FINAL DESIGN		AJW	NC	LMT	RAO
1	12/2/14	SUPPLEMENTARY 91% DESIGN		DSA	RB	JLA	
0	9/8/14	PRE-FINAL 90% DESIGN		DSA	RB	JLA	

REVISIONS

APPROVED BY	
RAO	SO
	SUPV
	DSGN
	DWN
	CHKD
	OK
	DATE
	SCALES

TOPOCK GROUNDWATER REMEDIATION PROJECT

COMPRESSOR STATION PONDS UPGRADES FRAMING PLANS

GAS TRANSMISSION & DISTRIBUTION
PACIFIC GAS AND ELECTRIC COMPANY
SAN FRANCISCO, CALIFORNIA

MICROFILM	
BILL OF MATL	
DWG LIST	
SUPSDS	
SUPSD BY	
SHEET NO.	of SHEETS
S-09-01	REV 2

N1808

11/06/2015, 15:22, G:\Graphics\AR\TOPOCK-01\Submittal_100%\DWGs\S-Structural\S-09-01.dwg, Tab: S-09-01

VULCRAFT 1.0 E
DECK SPECIFICATIONS

Deck Type	Design Thickness (in.)	W (psf)	Section Properties				Fy (ksi)
			I+ (in²/ft)	S+ (in²/ft)	I- (in²/ft)	S- (in²/ft)	
E20	0.0358	2.01	0.088	0.167	0.088	0.165	33

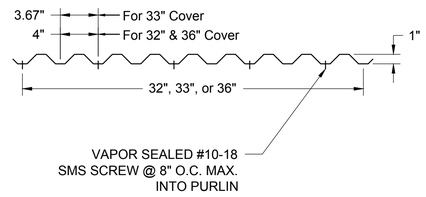

1 ROOF DECK SECTION
NTS

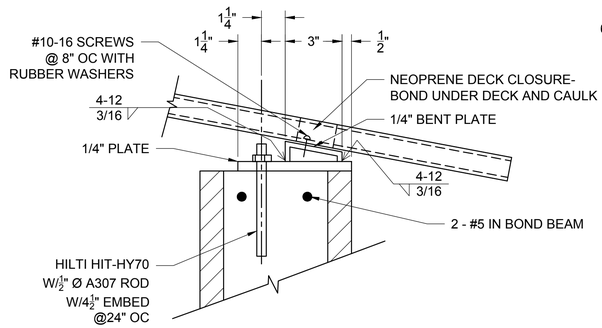

2 SECTION
1-1/2" = 1'-0"

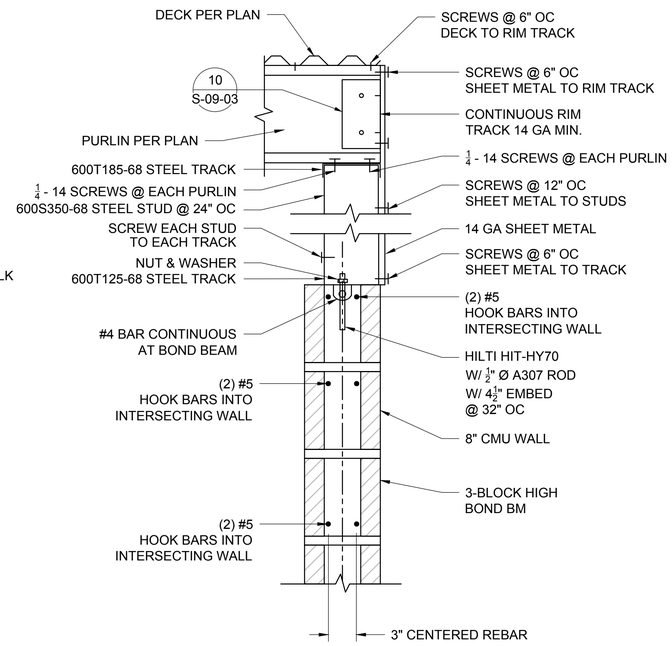

3 SECTION
1-1/2" = 1'-0"

NOTES:
1. #8-18 SCREWS UNLESS NOTED OTHERWISE.
2. ALL EXTERIOR SCREWS WITH RUBBER WASHERS.

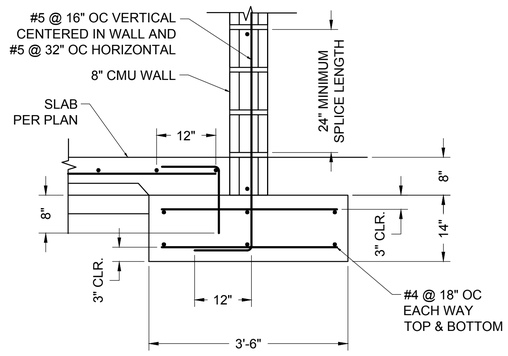

4 FOUNDATION DETAIL
3/4" = 1'-0"

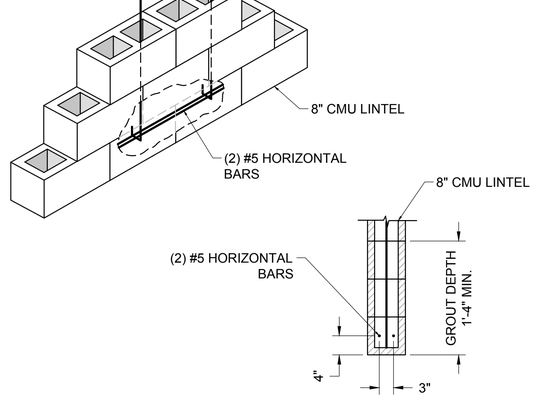

5 MASONRY LINTEL
3/4" = 1'-0"

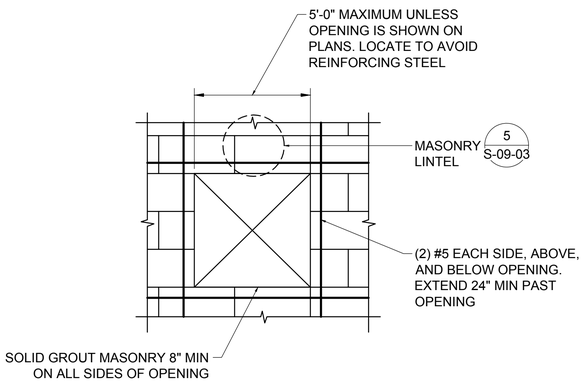

6 OPENING AT MASONRY WALL
3/4" = 1'-0"

- FINAL DESIGN -
FOR AGENCY
APPROVAL ONLY

REGISTERED PROFESSIONAL ENGINEER
REG. NO. 23287
EXP. 31 DEC 15
05 NOV 15
STRUCTURAL
STATE OF CALIFORNIA

ETIC ENGINEERING

ARCADIS

NO.	DATE	DESCRIPTION	GM/SPEC	DWN	CHKD	SUPV	APVD BY
2	11/18/15	FINAL DESIGN		AJW	NC	LMT	RAO
1	12/2/14	SUPPLEMENTAL (90%) DESIGN		DSA	RB	JLA	
0	9/8/14	PRE-FINAL (90%) DESIGN		DSA	RB	JLA	

REVISIONS

APPROVED BY	
RAO	SO
	SUPV
	DSGN
	DWN
	CHKD
	OK
	DATE
	SCALES

TOPOCK GROUNDWATER REMEDIATION PROJECT

COMPRESSOR STATION PONDS
UPGRADES DETAILS

GAS TRANSMISSION & DISTRIBUTION
PACIFIC GAS AND ELECTRIC COMPANY
SAN FRANCISCO, CALIFORNIA

MICROFILM	
BILL OF MATL	
DWG LIST	
SUPSDS	
SUPSD BY	
SHEET NO.	of SHEETS
S-09-02	REV 3

11/06/2015, 10:15, G:\Graphics\ARI\TOPOCK-01\Submittal_100%\DWGs\S-Structural\S-09-02_03.dwg, Tab: S-09-02

N1808

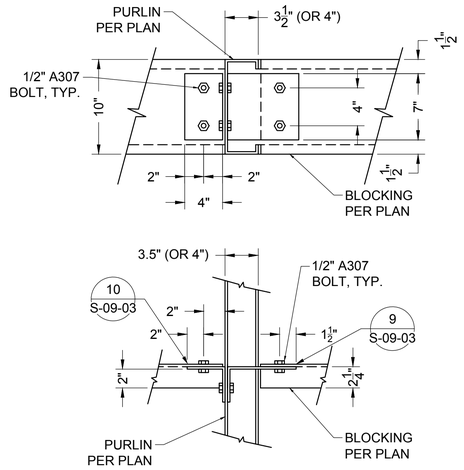

7 BLOCKING ATTACHMENT
1-1/2" = 1'-0"

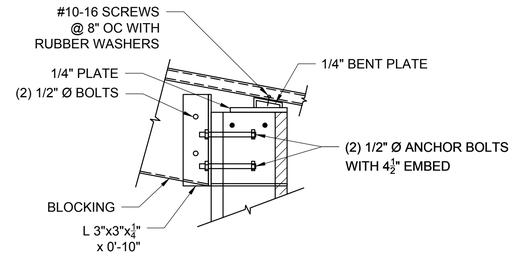

8 BLOCKING ATTACHMENT AT EXTERIOR
1-1/2" = 1'-0"

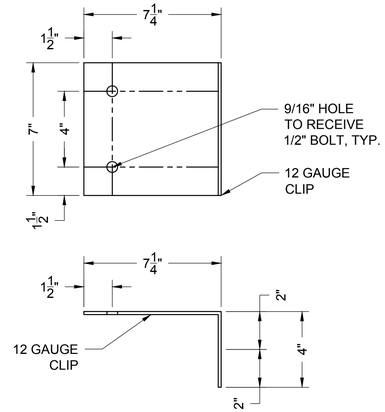

9 BLOCKING CLIP ANGLE
3" = 1'-0"

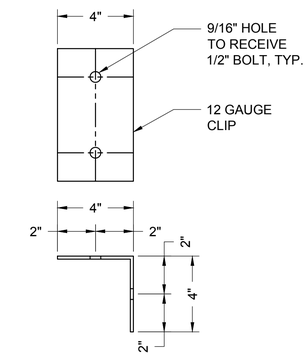

10 BLOCKING CLIP ANGLE
3" = 1'-0"

- FINAL DESIGN -
FOR AGENCY
APPROVAL ONLY

REGISTERED PROFESSIONAL ENGINEER
LAWRENCE M. MAKAY
REG. NO. 2097
Exp. 31 DEC 15
05 NOV 15
STRUCTURAL
STATE OF CALIFORNIA

ETIC ENGINEERING

ARCADIS

NO.	DATE	DESCRIPTION	GM/SPEC	DWN	CHKD	SUPV	APVD BY
2	11/18/15	FINAL DESIGN		AJW	NC	LMT	RAO
1	12/2/14	SUPPLEMENTAL (90%) DESIGN		DSA	RB	JLA	
0	9/8/14	PRE-FINAL (90%) DESIGN		DSA	RB	JLA	

REVISIONS

APPROVED BY: RAO

SO
SUPV
DSGN
DWN
CHKD
OK
DATE
SCALES

TOPOCK GROUNDWATER REMEDIATION PROJECT

COMPRESSOR STATION PONDS
UPGRADES DETAILS

GAS TRANSMISSION & DISTRIBUTION
PACIFIC GAS AND ELECTRIC COMPANY
SAN FRANCISCO, CALIFORNIA

MICROFILM
BILL OF MATL
DWG LIST
SUPSDS
SUPSD BY
SHEET NO. of SHEETS
S-09-03
REV 3

11/06/2015, 10:20, G:\Graphics\AR\TOPOCK-01\Submittal_100%\DWGs\S-Structural\S-09-02_03.dwg, Tab: S-09-03

N1808

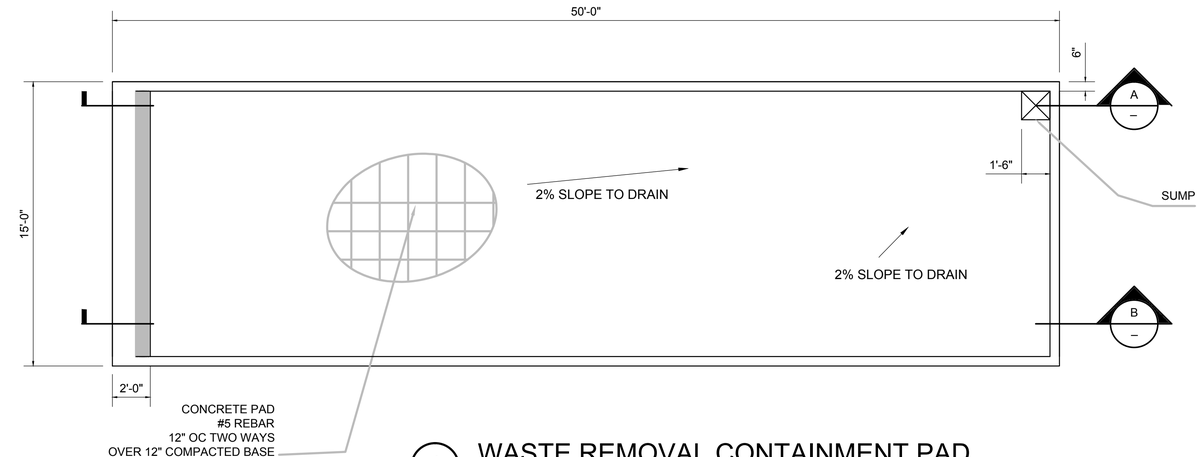

1 WASTE REMOVAL CONTAINMENT PAD

1/4" = 1'-0"

C-09-01

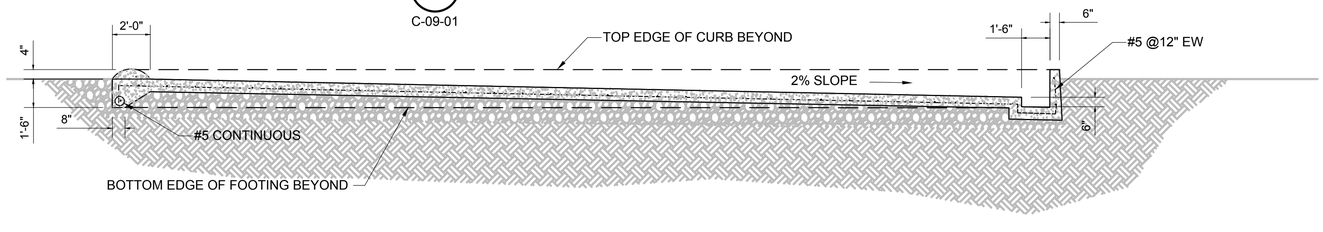

A SECTION

1/4" = 1'-0"

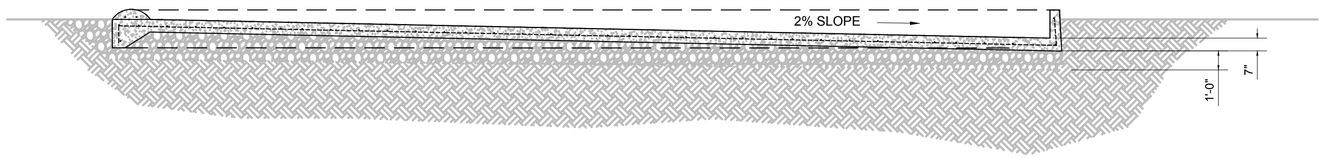

B SECTION

1/4" = 1'-0"

SCALE: 1/4"=1'-0"

- FINAL DESIGN -
FOR AGENCY
APPROVAL ONLY

REGISTERED PROFESSIONAL ENGINEER
REG. NO. 2287
Exp. 31 Dec 15
05 Nov 15
STRUCTURAL
STATE OF CALIFORNIA

ETIC ENGINEERING

ARCADIS

NO.	DATE	DESCRIPTION	GM/SPEC	DWN	CHKD	SUPV	APVD BY
2	11/18/15	FINAL DESIGN		AJW	NC	LMT	RAO
1	12/2/14	SUPPLEMENTAL PRE-FINAL (90%) DESIGN		DSA	JLA	SS	
0	9/8/14	PRE-FINAL (90%) DESIGN		MJY	RB	RB	

REVISIONS

APPROVED BY	
RAO	SO
	SUPV
	DSGN
	DWN
	CHKD
	OK
	DATE
	SCALES

TOPOCK GROUNDWATER REMEDIATION PROJECT

COMPRESSOR STATION PONDS UPGRADES CONCRETE DETAILS

GAS TRANSMISSION & DISTRIBUTION
PACIFIC GAS AND ELECTRIC COMPANY
SAN FRANCISCO, CALIFORNIA

MICROFILM	
BILL OF MATL	
DWG LIST	
SUPSDS	
SUPSD BY	
SHEET NO.	of SHEETS
S-09-04	REV 2

N1808

11/06/2015, 10:38, G:\Graphics\AR\TOPOCK-01\Submittal_100%\DWG\dsS-StructuralS-09-04.dwg, Tab: S-09-04

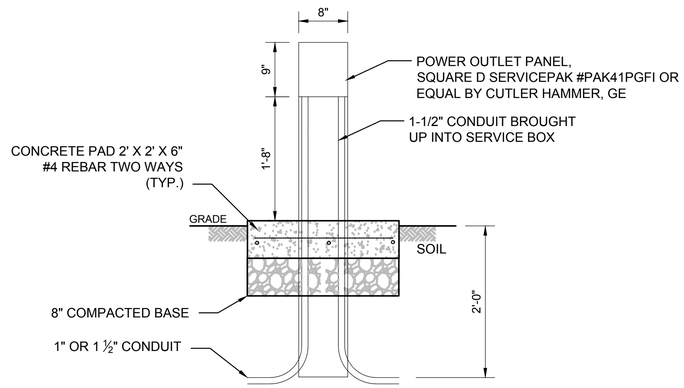

1 GFCI RISER DETAIL (TYP.)
1" = 1'-0"
C-09-01

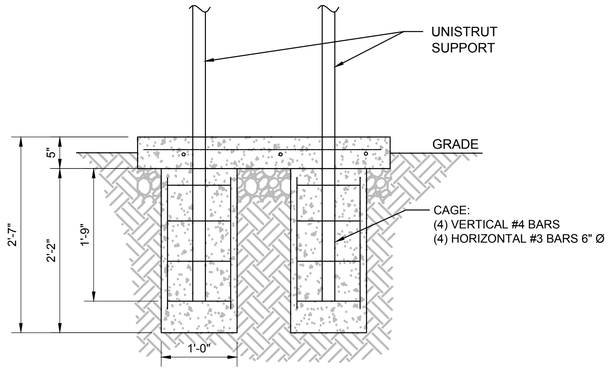

4 REBAR CAGE DETAIL
1" = 1'-0"
C-09-01

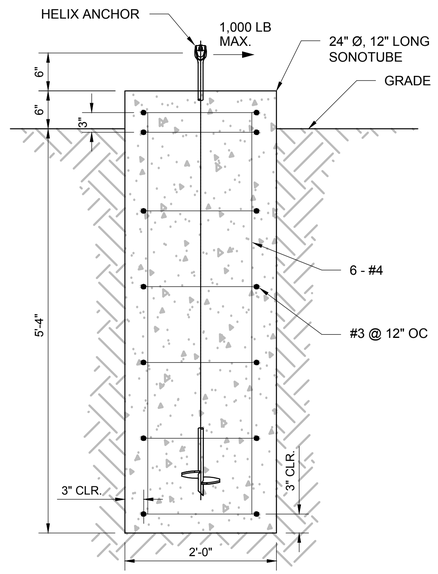

5 GUY WIRE ANCHOR DETAIL
1" = 1'-0"
C-09-01

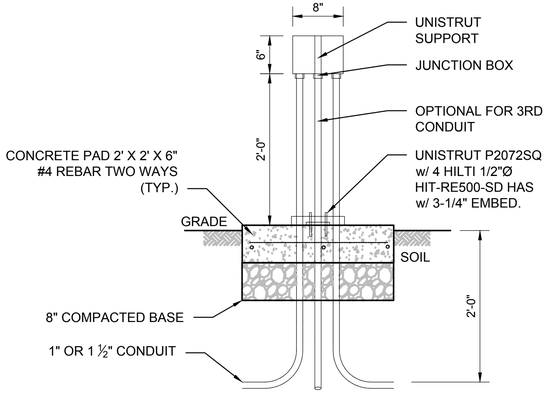

2 CONDUIT RISER DETAIL (TYP.)
1" = 1'-0"
C-09-01

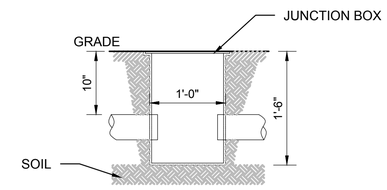

3 PULLBOX DETAIL (TYP.)
1" = 1'-0"
C-09-01

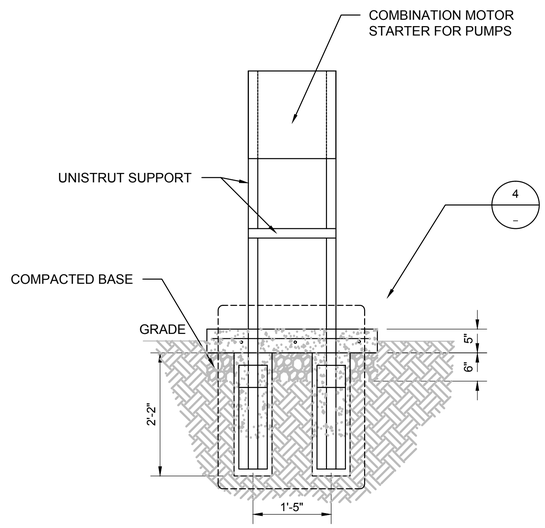

A SECTION
3/4" = 1'-0"

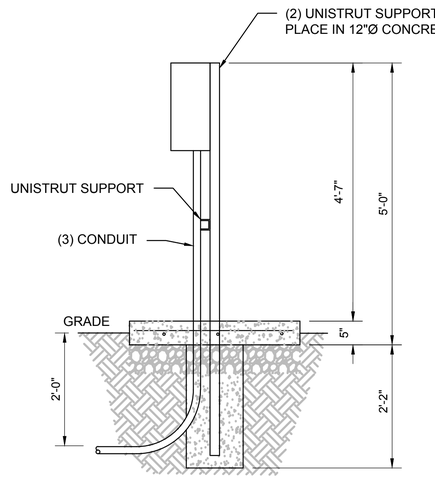

B SECTION
3/4" = 1'-0"

NOTE:
UNISTRUT MEMBERS:
P1000 - HOT DIP GALV.

0 1 2 3
SCALE: 1"=1'-0"

0 1 2 3 4
SCALE: 3/4"=1'-0"

- FINAL DESIGN -
FOR AGENCY
APPROVAL ONLY

REGISTERED PROFESSIONAL ENGINEER
REG. NO. 5267
Exp. 31 DEC 15
05 NOV 15
STRUCTURAL
STATE OF CALIFORNIA

ETIC ENGINEERING

ARCADIS

NO.	DATE	DESCRIPTION	GM/SPEC	DWN	CHKD	SUPV	APVD BY
2	11/18/15	FINAL DESIGN		AJW	NC	LMT	RAO
1	12/2/14	SUPPLEMENTAL PRE-FINAL (90%) DESIGN		DSA	JLA	SS	
0	9/8/14	PRE-FINAL (90%) DESIGN		MJY	RB	RB	

REVISIONS

APPROVED BY	
	SO
	SUPV
RAO	DSGN
	DWN
	CHKD
	OK
	DATE
	SCALES

TOPOCK GROUNDWATER REMEDIATION PROJECT

COMPRESSOR STATION PONDS UPGRADES CONDUIT DETAILS

GAS TRANSMISSION & DISTRIBUTION
PACIFIC GAS AND ELECTRIC COMPANY
SAN FRANCISCO, CALIFORNIA

MICROFILM	
BILL OF MATL	
DWG LIST	
SUPSDS	
SUPSD BY	
SHEET NO.	of SHEETS
S-09-05	REV 2

N1808

11/06/2015, 10:40, G:\Graphics\ARITOPOCK-01\Submittal_100%\DWGs\S-Structural\S-09-05.DWG, Tab: S-09-05

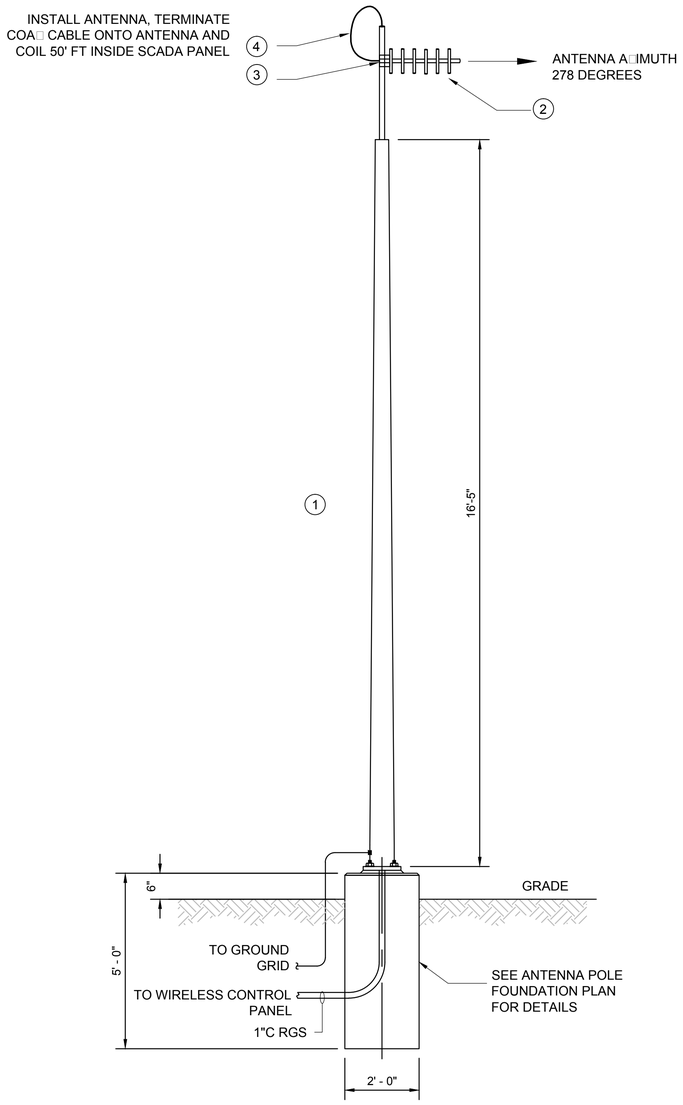

1 ANTENNA POLE DETAIL
1/2" = 1'-0"

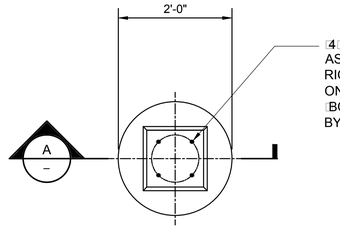

ANTENNA POLE FOUNDATION PLAN
3/4" = 1'-0"

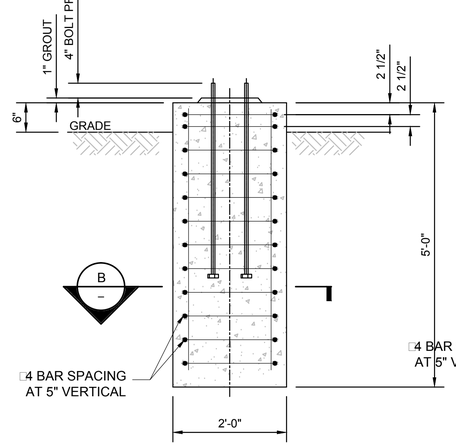

A SECTION
3/4" = 1'-0"

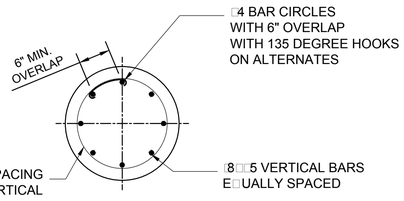

B SECTION
3/4" = 1'-0"

ANCHOR DETAILS

LOCATIONS: POND 3 & 4
4 EACH FOR PONTOON, 1 AT LADDER

CONCRETE AND REINFORCING:

GENERAL
1. Design, materials, and workmanship shall be in accordance with applicable federal, state, and local codes, and the latest edition of the following standards:
   a. ACI 301 specification for structural concrete.
   b. ACI 318 - building code requirements for reinforced concrete.
   c. SP66 - ACI detailing manual
   d. CRSI- recommended practice for placing reinforcing steel.
2. Concrete materials shall conform to the latest revision of the following specifications:
   a. Aggregates, per ASTM c33
   b. Cement, per astm C150, type i, unless noted otherwise
   c. Deformed reinforcing bars, per A615, grade 60
   d. Welded wire fabric, per A82 and A185
3. Concrete work performed below 40 degrees F shall be in accordance with ACI standard 306
4. Concrete work performed above 90 degrees F shall be in accordance with ACI standard 305

MIX DESIGN
1. Concrete exposure shall be f1 and develop a minimum compressive strength of 4000 psi at 28 days, unless noted otherwise.
2. Maximum course aggregate size shall be 3/4".
3. Water/cement ratio shall not exceed 0.45.
4. Flyash content shall not exceed 20% of total cementitious material.
5. Air entrainment in mix design for footings, piers, walls, and beams shall be 5% plus or minus 1%.
6. Air entrainment in mix design for exterior slabs on grade and sidewalks shall be 6% plus or minus 1.5%.
7. Slump shall be less than or equal to 4".
8. Mix designs shall incorporate admixtures as appropriate for environmental conditions.

DRILLED PIERS
1. Non-corrosive spacers shall be used at the exterior of the reinforcing cage both top and at sufficient intervals along the side of the cage for the entire length within the shaft excavation. spacers shall be adequate dimensions to ensure a minimum 3" annular space between outside of cage and excavated shaft.
2. Free fall placement of concrete shall only be permitted in dry excavations where free water accumulation of 3" or less of water can be maintained prior to concrete placement. concrete placed by free fall methods shall be directed in the center of the shaft to avoid contact with the reinforcing steel cage, shaft side walls and trim. drop chutes are recommended if water cannot be maintained due to high water table. tremie pour methods must be used.
3. The owner shall be provided access to inspect shaft excavation and rebar cage prior to concrete placement. all shaft excavations shall have concrete placed within 24 hours of excavation, except as approved by owner.
4. Concrete piers shall be cast around undisturbed earth. formwork shall extend 1'-0" below grade.
5. Anchor rod threads shall be covered with duct tape or other suitable means to keep the threads clean and prevent damage.
6. Circular columns to have 135 degree hooks on alternate bars with a min. 6" overlap per ACI 7.10.5.4.

DESIGN ASSUMPTIONS
1. Wind load criteria based on 2013 california building code:
   a. Wind speed = 115 mph.
   b. Exposure category = c.
   c. K = 1.0.
2. Load-bearing values per 2013 california building code table 1806.2, class 5 material.
   a. Vertical foundation pressure = 1500 psf.
   b. Lateral bearing pressure = 100 psf/ft.
   c. Contractor shall verify code minimum capacities above are satisfied.

0 1 2 3 4
SCALE: 3/4"=1'-0"

- FINAL DESIGN - FOR AGENCY APPROVAL ONLY

REGISTERED PROFESSIONAL ENGINEER — Jason Wolfert — No. 29317 — Exp. 31 DEC 15 — OSNOVIS — CIVIL — STATE OF CALIFORNIA

ETIC ENGINEERING
ARCADIS

NO.	DATE	DESCRIPTION	GM/SPEC	DWN	CHKD	SUPV	APVD BY
1	11/18/15	FINAL DESIGN	AJW	NC	LMT	RAO	
0	9/8/14	PRE-FINAL 90% DESIGN	MJY	RB	RB		

REVISIONS

APPROVED BY	
RAO	SO
	SUPV
	DSGN
	DWN
	CHKD
	OK
	DATE
	SCALES

TOPOCK GROUNDWATER REMEDIATION PROJECT

COMPRESSOR STATION PONDS POLE AND GUY ANCHORING

GAS TRANSMISSION & DISTRIBUTION
PACIFIC GAS AND ELECTRIC COMPANY
SAN FRANCISCO, CALIFORNIA

MICROFILM	
BILL OF MATL	
DWG LIST	
SUPSDS	
SUPSD BY	
SHEET NO.	of SHEETS
S-09-06	REV 1

11/06/2015, 15:29, G:\Graphics\ART\TOPOCK-01\Submittal_100%\DWGs\S-Structural\S-09-06.dwg, Tab: S-09-06

N180B

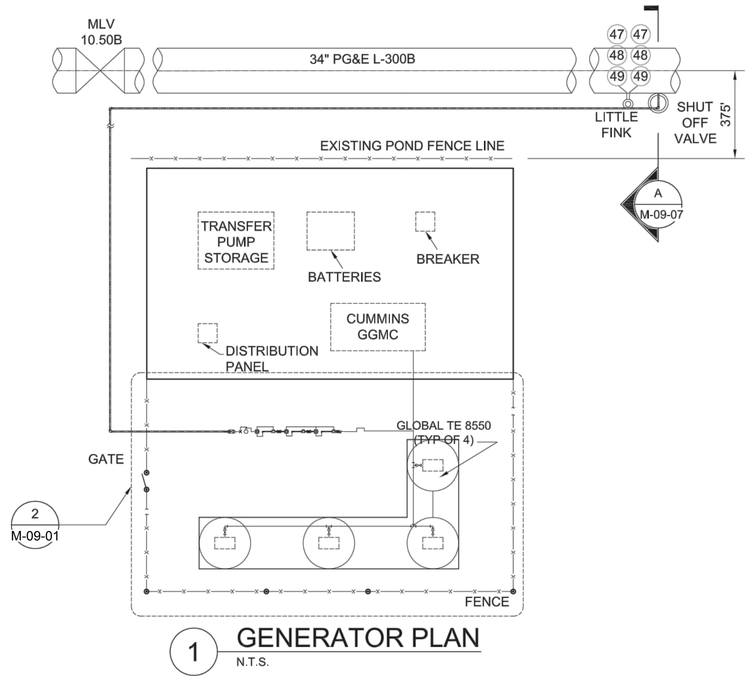

1 GENERATOR PLAN
N.T.S.

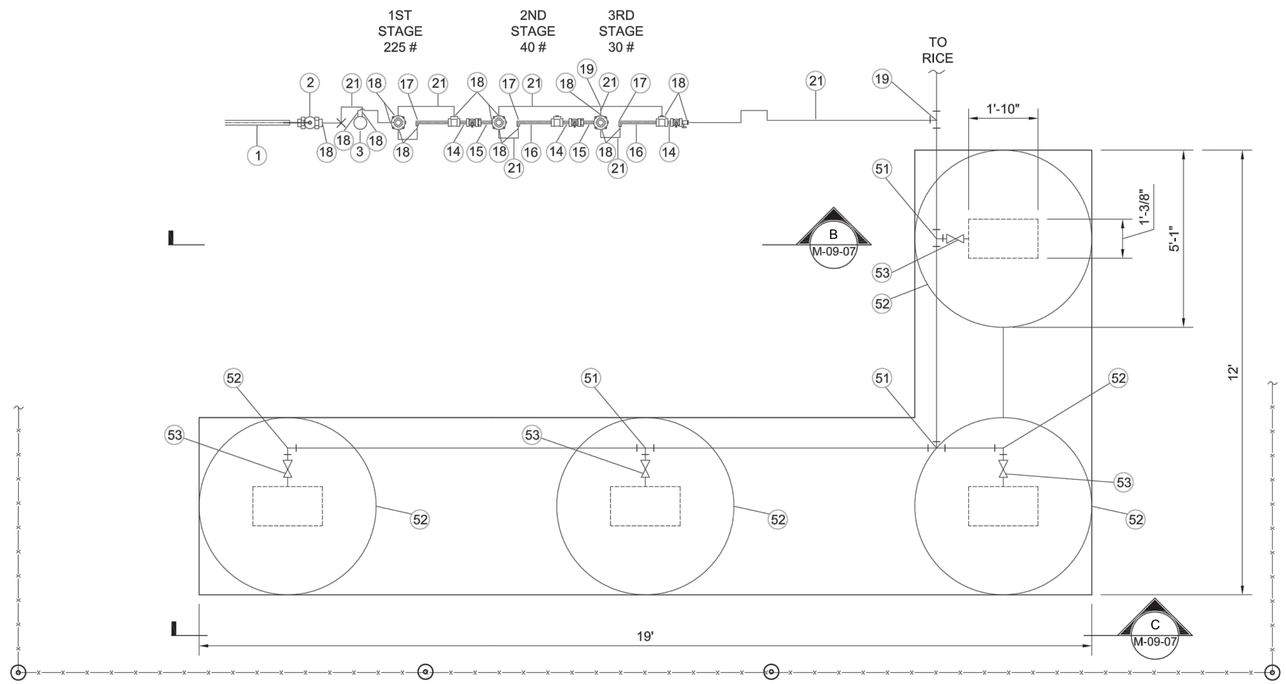

2 GENERATOR DETAIL
N.T.S.
M-09-01

LEGEND:

(1) REFERENCE ITME NUMBER IN SCHEDULE.

NOTES:

1. CONFIRM MATERIALS AND METHODS WITH PG□E SERVICE RE□UIREMENTS AND ANY REFERENCED PG□E GAS DESIGN STANDARDS.

SCHEDULE

PG&E CODE	ITEM NO.	QTY	DESCRIPTION	CATALOG OR DWG REF.
011036	1	550'	PIPE STEEL SEAMLESS 1.050" OD x D154" WALL STD. API-5L. GR B. SMLS. WRAP	GAS STD A-15
034459	2	1	VALVE. 3/4" BALL. THREADED. 2500 PIC. MARPAC	GAS STD F-20
870001	3	1	FILTER. WELKER. SULFUR REMOVAL. 1/4" FNPT	WELKER
030550	4	1	PILOT. MOONEY. SERIES 20. HP BK SPRING 200-500#	GAS STD HBO 1
446P52	5	2	PILOT. MOONEY. SERIES 20. HP BK SPRING 25-90#	GAS STD HBO 1
035156	6	3	VALVE NEEDLE. 1/4"MNPT X 1/4" FNPT PN H1VDC-22	GAS STD F-70
035153	7	1	VALVE NEEDLE. 1/4"MNPT X 1/4" FNPT PN H1VDC-2	GAS STD F-70
442573	8	1	MUELLER, 1" CURB VALVE TEE, MODEL No. H-17800	GAS STD A43.1
022445	9	1	MUELLER, TEE. 1' MODEL No. H-17656	GAS STD C-11
022588	10	10	ELBOW, 3/4" SOCKET WELD, 3000#	GAS STD B-21
021195	11	1	TEE, 3/4" THREADED. 3000#	GAS STD B-14
022268	12	2	BUSHING, 3/4" MNPT X 1/4" FNPT	INDUSTRIAL
021247	13	6	PLUG, 1/4" FORGED STEEL. HEX HEAD	GAS STD B10.1
870002	14	3	NIPPLE. 1/4". EXTRA STRONG. 2" LONG	GAS STD B13.1
870003	15	3	NIPPLE. 1/4". EXTRA STRONG. 6" LONG	GAS STD B13.1
870004	16	2	NIPPLE. 1/4". EXTRA STRONG. 18" LONG	GAS STD B13.1
870005	17	3	ELBOW, 1/4". SWAGELOK. SS-4-E, 7200 PSIG RATING	SWAGELOK
028140	18	19	MALE CONNECTOR, 3/8" TUBING X 1/4 PIPE THD	GAS STD B-62
028197	19	2	CONNECTER, ALL TUBE TEE, 3/8" TUBING	GAS STD B-62
870006	20	6	TEE, 1/4". SWAGELOK. SS-4-T, 7200 PSIG RATING	SWAGELOK
011015	21	45'	TUBING, 304SS, 3/8" OD, 0.035"WT	GAS STD A-22
870007	22	70'	STRUT, CHANNEL, SINGLE, 1-5/8"X 1-5/8", PN 3310T2	McMASTERCARR
870008	23	4	STRUT,CHANNEL, MOUNT CLAMPS, 3/8", PN 3115T13	McMASTERCARR
870009	24	2	STRUT CHANNEL, 5-HOLE GUSSET CORNER PLATE, PN 33125T22	McMASTERCARR
870010	25	5	STRUT CHANNEL, 5-HOLE GUSSET T-PLATE, 33125T92	McMASTERCARR
870011	26	1	STRUT,CHANNEL, CROSS PLATE, 33125T92	McMASTERCARR
870012	27	1	STRUT, SUPPORT BASE, 33145T32	McMASTERCARR
870013	28	1 PNG	STRUT, CLAMPING NUTS WITH SPRING, 3259T15	McMASTERCARR
294991	32	AS REQ'D	WIRE, #10 HMWPE WITH 47 MIL THICKNESS 600 VOLTS, SOLID COPPER, BLACK INSULATION	GAS STD 0-10
569382	33	1	LITTLE FINK, TEST LEAD BOX, 2-TERMINAL ORANGE	GAS STD 0-10.1
360469	34	1	CONDUIT, 1-1/4" PVC, SCHEDULE 40 (FOR LITTLE FINK)	GAS STD 0-10.1
041189	35	1	LID, TRAFFIC RATED (H-20), 17"(W) X 30"(L) X 12"(H) (INSIDE DIMENSIONS), (FOR USE AROUND GAS PIPING)	
041184	36	1	VALVE BOX, TRAFFIC RATED (H-20) 17"(W) X 30"(L) X 12"(H) (INSIDE DIMENSIONS), (FOR USE AROUND GAS PIPING)	
870016	37	256'	#5 REINFORCING BAR	
870017	38	20	ANCHOR BOLT, 1/2" DIA X 12" LONG	
870018	39	9'	SONATUBE. 12" DIAMETER	
870019	40	3 YD	CONCRETE, FC= 3500 PSI	
043271	41	1	BODY, CONCRETE VALVE FRAME, 10-3/8" X 12", GR-5	GAS STD K-40
043225	42	1	CONCRETE, VALVE CAST IRON 11-1/8" DIA, FULL TRAFFIC	GAS STD K-40
870020	43	3	QUICK CONNECT FITING, SS-0C6-B-4PM, SWAGELOK	SWAGELOK
870021	44	3	BODY PROTECTOR, SS-QC4-BP, SWAGELOK	SWAGELOK
159260	45	4	CARTRIDGE, CALDWELD OR THERMOWELD 15 GRAM	GAS STD 0-10
0303755	46	4	SLEEVE, COPPER, THERMOWELD A200 OR EQUIVALENT	GAS STD 0-10
0569383	47	4	HANDY CAP, ROYSTON, 4" X 4" PATCH	GAS STD F-27
N/A	48	4	THERMOELECTRIC GENERATOR, GLOBAL THERMOELECTRIC MODEL 8550	GLOBAL THERMOELECTRIC
	49	1	VALVE IDENTIFICATION TAG	
	50	TO SUIT	CONCRETE, 4000 PSI	
	51	3	TEE, MALE BRANCH, ⅜" TB X ¼" MNPT	SWAGELOK
	52	2	ELBOW, ⅜" TB X ¼" MNPT	SWAGELOK
	53	4	VALVE, BALL ¼" NPT, 2000LB	GAS STD F-70

REGISTERED PROFESSIONAL ENGINEER
BENJAMIN J. WUERL
C 67811
Exp 6/30/17
STATE OF CALIFORNIA

- FINAL DESIGN -
FOR AGENCY APPROVAL ONLY

ETIC ENGINEERING

ARCADIS

NO.	DATE	DESCRIPTION	GM/SPEC	DWN	CHKD	SUPV	APVD BY
2	11/18/15	FINAL DESIGN	AJW	KLD	BW	RAO	
1	12/02/14	SUPPLEMENTAL PRE-FINAL □90%□ DESIGN	DSA	JLA	SS		
0	9/8/14	PRE-FINAL □90%□ DESIGN	DSA	RB	RB		

REVISIONS

APPROVED BY: RAO

SO | SUPV | DSGN | DWN | CHKD | OK | DATE | SCALES

TOPOCK GROUNDWATER REMEDIATION PROJECT

COMPRESSOR STATION PONDS UPGRADES GENERATOR AND CONNECTOR PLAN

GAS TRANSMISSION & DISTRIBUTION
PACIFIC GAS AND ELECTRIC COMPANY
SAN FRANCISCO, CALIFORNIA

MICROFILM | BILL OF MATL | DWG LIST | SUPSDS | SUPSD BY

SHEET NO. M-09-01 of SHEETS | REV 2

N1808

11/02/2015, 10:57, G:\Graphics\ART\TOPOCK-011Submittal_100%\DWGs\M-Mechanical\M-09-01_02_04_05_06_07.dwg, Tab: M-09-01

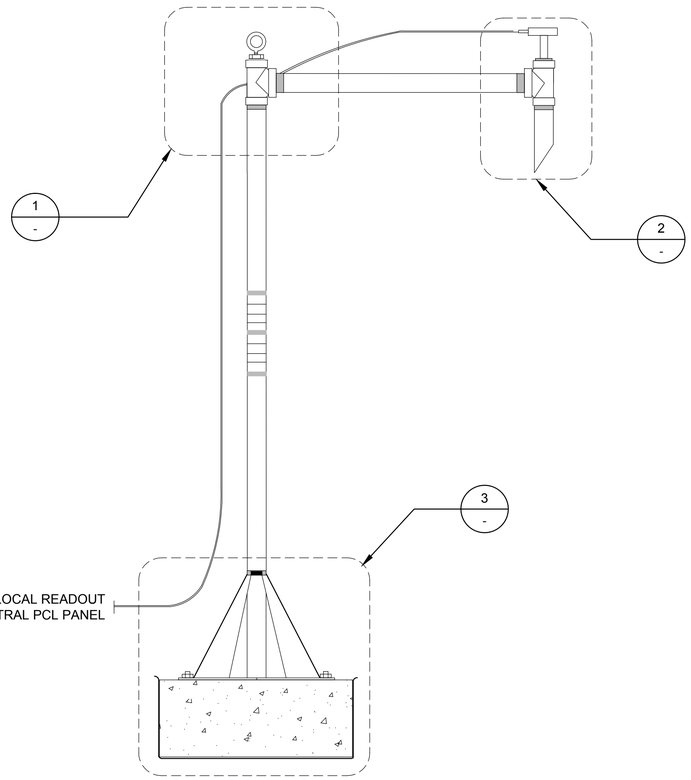

1 LI□UID LEVEL SENSOR DETAIL
N.T.S.
C-09-01

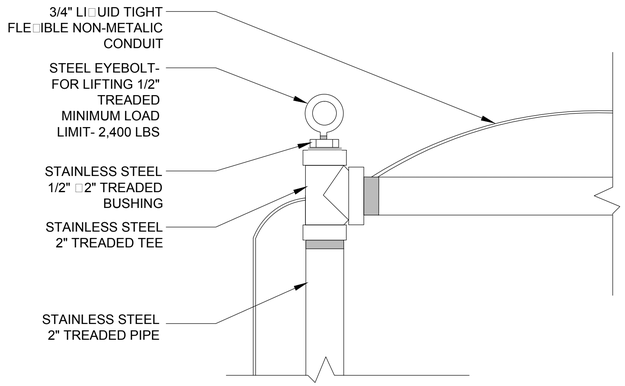

2 LIFTING EYEBOLT DETAIL
N.T.S.

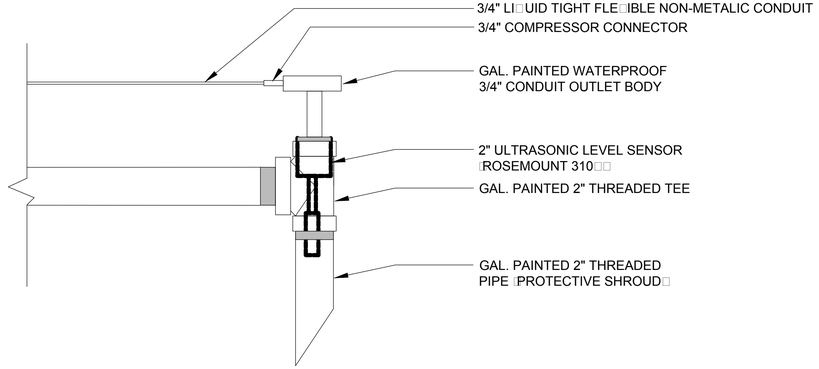

3 LEVEL SENSOR DETAIL
N.T.S.

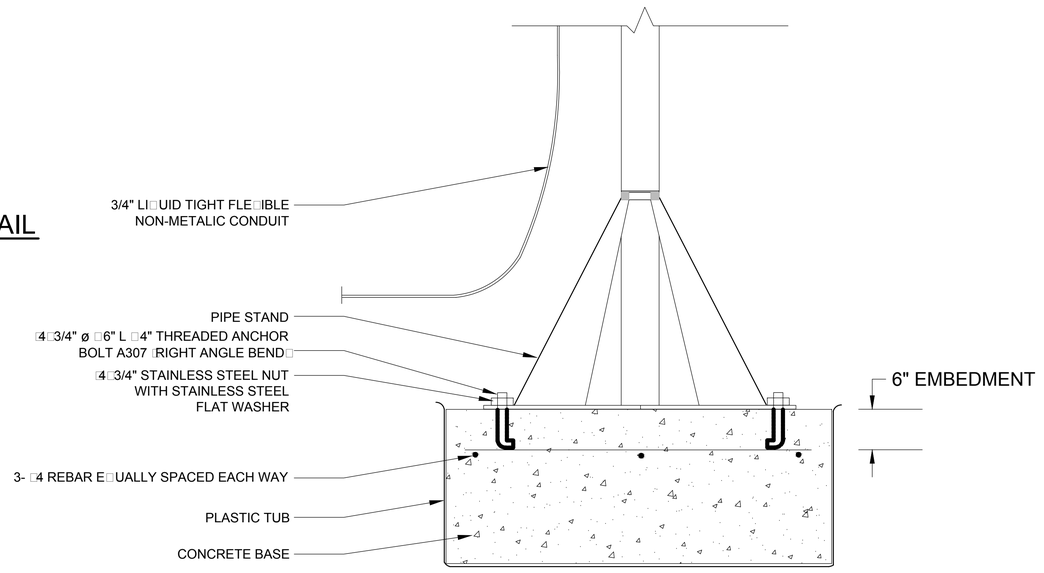

4 LI□UID LEVEL SENSOR BASE DETAIL
N.T.S.

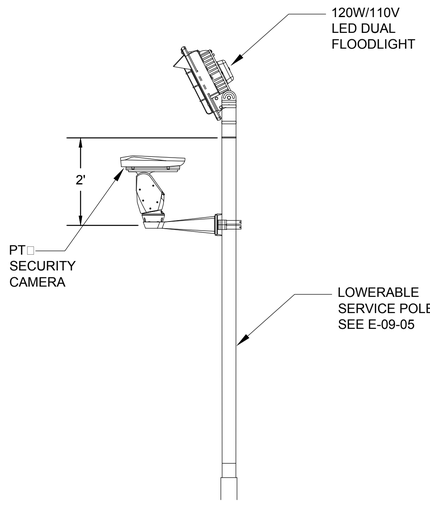

5 WIFI ANTENNA CAMERA □ LIGHT DETAIL
N.T.S.

- FINAL DESIGN -
FOR AGENCY
APPROVAL ONLY

REGISTERED PROFESSIONAL ENGINEER
BENJAMIN J. WUERL
C 67811
EXP 6/30/17
STATE OF CALIFORNIA

ETIC ENGINEERING
ARCADIS

NO.	DATE	DESCRIPTION	GM/SPEC	DWN	CHKD	SUPV	APVD BY
1	11/18/15	FINAL DESIGN		AJW	KLD	BW	RAO
0	9/8/14	PRE-FINAL □90%□ DESIGN		RL	RB	RB	

REVISIONS

APPROVED BY	
RAO	SO
	SUPV
	DSGN
	DWN
	CHKD
	OK
	DATE
	SCALES

TOPOCK GROUNDWATER REMEDIATION PROJECT

COMPRESSOR STATION PONDS UPGRADES AU□ILIARY E□UIPMENT

GAS TRANSMISSION & DISTRIBUTION
PACIFIC GAS AND ELECTRIC COMPANY
SAN FRANCISCO, CALIFORNIA

MICROFILM	
BILL OF MATL	
DWG LIST	
SUPSDS	
SUPSD BY	
SHEET NO. of	SHEETS
M-09-02	REV 1

N1808

11/02/2015, 10:59, G:\Graphics\ART\TOPOCK-011\Submittal_100%\DWGs\M-Mechanical\M-09-01_02_04_05_06_07.dwg, Tab: M-09-02

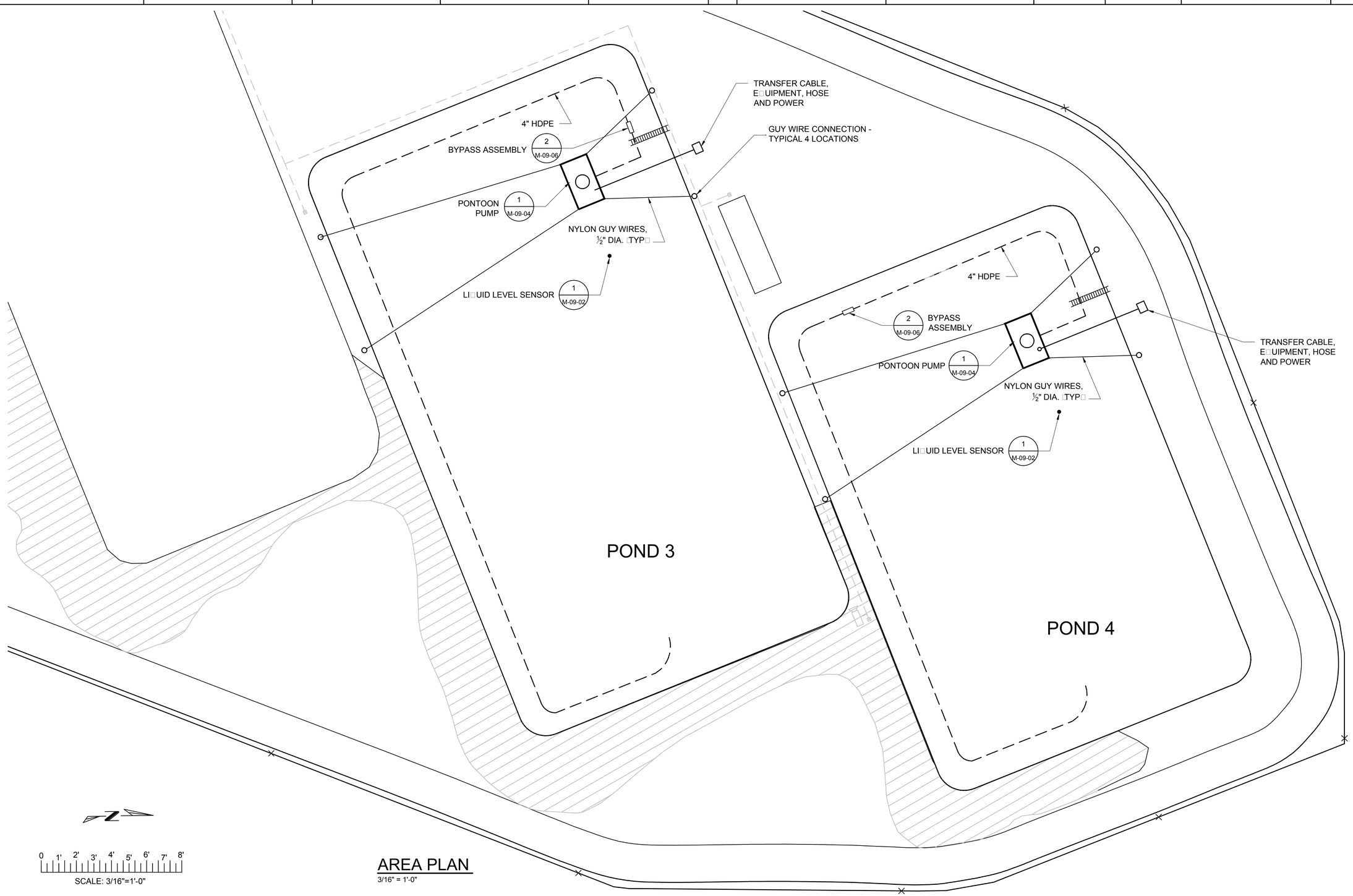

0 1' 2' 3' 4' 5' 6' 7' 8'

SCALE: 3/16"=1'-0"

AREA PLAN

3/16" = 1'-0"

- FINAL DESIGN - FOR AGENCY APPROVAL ONLY

REGISTERED PROFESSIONAL ENGINEER
BENJAMIN J. WUESTL
C 67811
EXP 6/30/17
CIVIL
STATE OF CALIFORNIA

ETIC ENGINEERING

ARCADIS

NO.	DATE	DESCRIPTION	GM/SPEC	DWN	CHKD	SUPV	APVD BY
1	11/18/15	FINAL DESIGN	AJW	KLD	BW	RAO	
0	9/8/14	PRE-FINAL (90%) DESIGN	MM	RB	RB		

REVISIONS

APPROVED BY	
RAO	SO
	SUPV
	DSGN
	DWN
	CHKD
	OK
	DATE
	SCALES

TOPOCK GROUNDWATER REMEDIATION PROJECT

COMPRESSOR STATION PONDS UPGRADES MECHANICAL SITE PLAN

GAS TRANSMISSION & DISTRIBUTION
PACIFIC GAS AND ELECTRIC COMPANY
SAN FRANCISCO, CALIFORNIA

MICROFILM	
BILL OF MATL	
DWG LIST	
SUPSDS	
SUPSD BY	
SHEET NO.	of SHEETS
M-09-03	REV 1

11/02/2015, 11:01, G:\Graphics\ARITOPOCK-01\Submittal_100%\DWGs\M-Mechanical\M-09-03.dwg, Tab: M-09-03

N1808

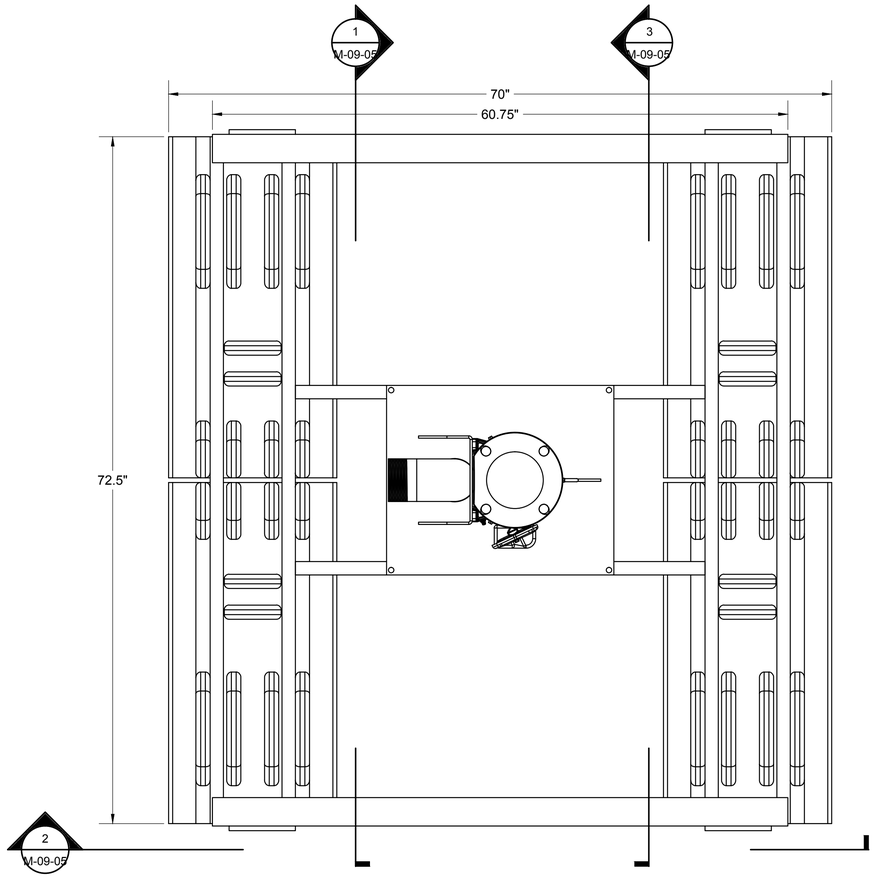

1 FLOAT STRUCTURE PLAN
1-1/2" = 1'-0"
M-09-03

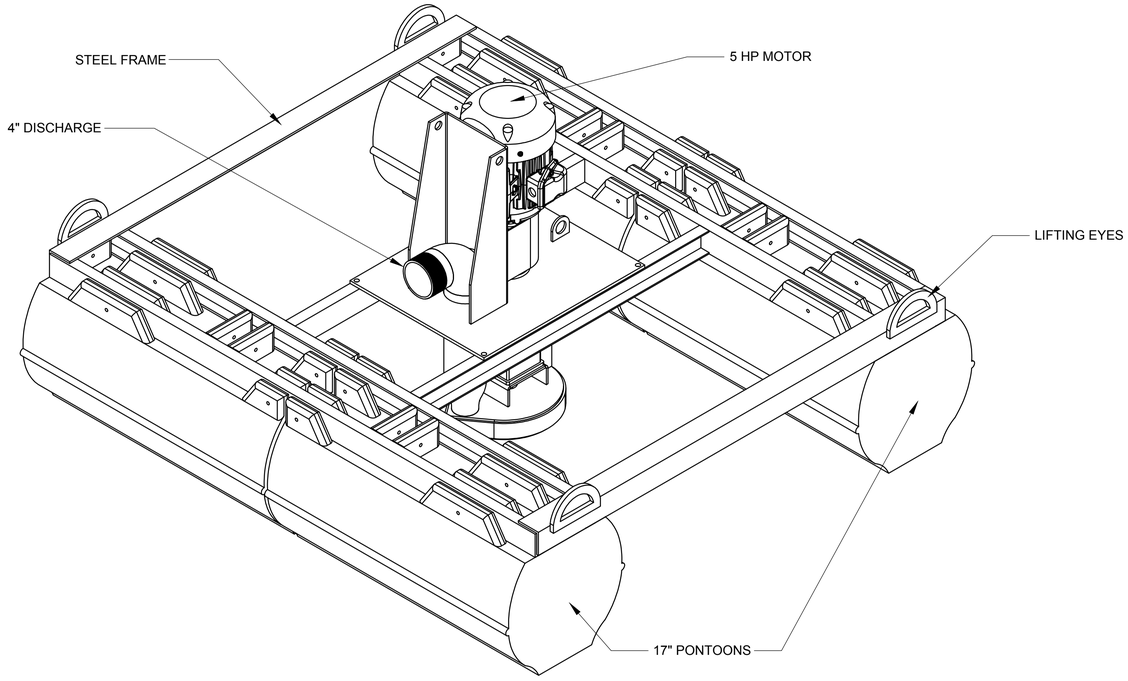

2 FLOAT STRUCTURE 3-DIMENSIONAL VIEW
N.T.S.
M-09-03

- FINAL DESIGN - FOR AGENCY APPROVAL ONLY

REGISTERED PROFESSIONAL ENGINEER
BENJAMIN J. WUEST
C 67811
EXP 6/30/17
STATE OF CALIFORNIA

ETIC ENGINEERING

ARCADIS

NO.	DATE	DESCRIPTION	GM/SPEC	DWN	CHKD	SUPV	APVD BY
0	11/18/15	FINAL DESIGN		AJW	KLD	BW	RAO

REVISIONS

APPROVED BY	
	SO
RAO	SUPV
	DSGN
	DWN
	CHKD
	OK
	DATE
	SCALES

TOPOCK GROUNDWATER REMEDIATION PROJECT

COMPRESSOR STATION PONDS UPGRADES PONTOON PLAN AND DETAILS

GAS TRANSMISSION & DISTRIBUTION
PACIFIC GAS AND ELECTRIC COMPANY
SAN FRANCISCO, CALIFORNIA

MICROFILM	
BILL OF MATL	
DWG LIST	
SUPSDS	
SUPSD BY	
SHEET NO.	of SHEETS
M-09-04	REV 0

N1808

11/02/2015, 11:02, G:\Graphics\ARTOPOCK-01\Submittal_100%\DWGs\M-Mechanical\M-09-01_02_04_05_06_07.dwg, Tab: M-09-04

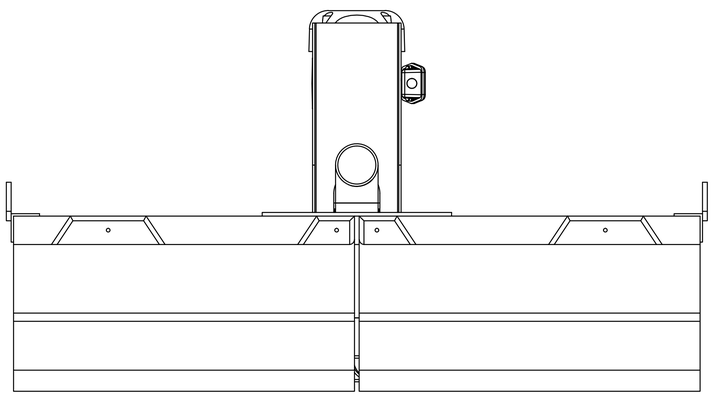

1 FLOAT STRUCTURE SECTION
1-1/2" = 1'-0"
M-09-03

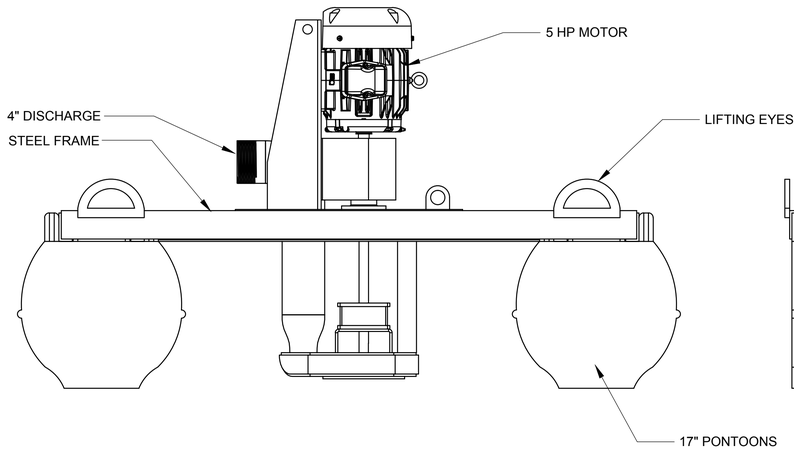

2 FLOAT STRUCTURE SECTION
1-1/2" = 1'-0"
M-09-03

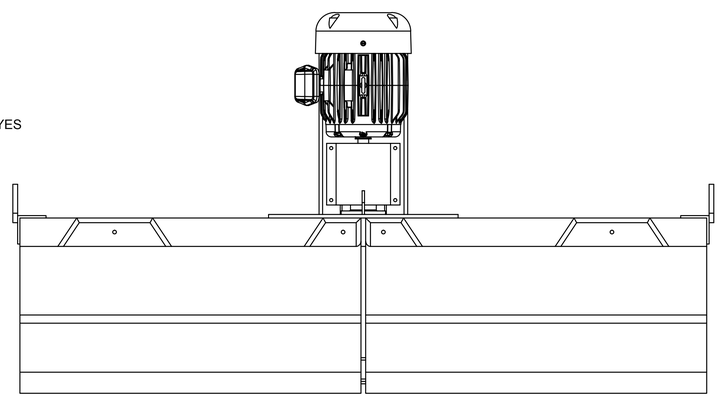

3 FLOAT STRUCTURE SECTION
1-1/2" = 1'-0"
M-09-03

- FINAL DESIGN -
FOR AGENCY
APPROVAL ONLY

REGISTERED PROFESSIONAL ENGINEER
BENJAMIN J. WUESTL
C 67811
EXP 6/30/17
STATE OF CALIFORNIA

ETIC ENGINEERING

ARCADIS

NO.	DATE	DESCRIPTION	GM/SPEC	DWN	CHKD	SUPV	APVD BY
0	11/18/15	FINAL DESIGN	AJW	KLD	BW	RAO	

REVISIONS

APPROVED BY	
RAO	
SO	
SUPV	
DSGN	
DWN	
CHKD	
OK	
DATE	
SCALES	

TOPOCK GROUNDWATER REMEDIATION PROJECT

COMPRESSOR STATION PONDS UPGRADES PONTOON ELEVATIONS

GAS TRANSMISSION & DISTRIBUTION
PACIFIC GAS AND ELECTRIC COMPANY
SAN FRANCISCO, CALIFORNIA

MICROFILM	
BILL OF MATL	
DWG LIST	
SUPSDS	
SUPSD BY	
SHEET NO. of SHEETS	
M-09-05	REV 0

N1808

11/02/2015, 11:03, G:\Graphics\ARITOPOCK-01\Submittal_100%\DWGs\M-Mechanical\M-09-01_02_04_05_06_07.dwg, Tab: M-09-05

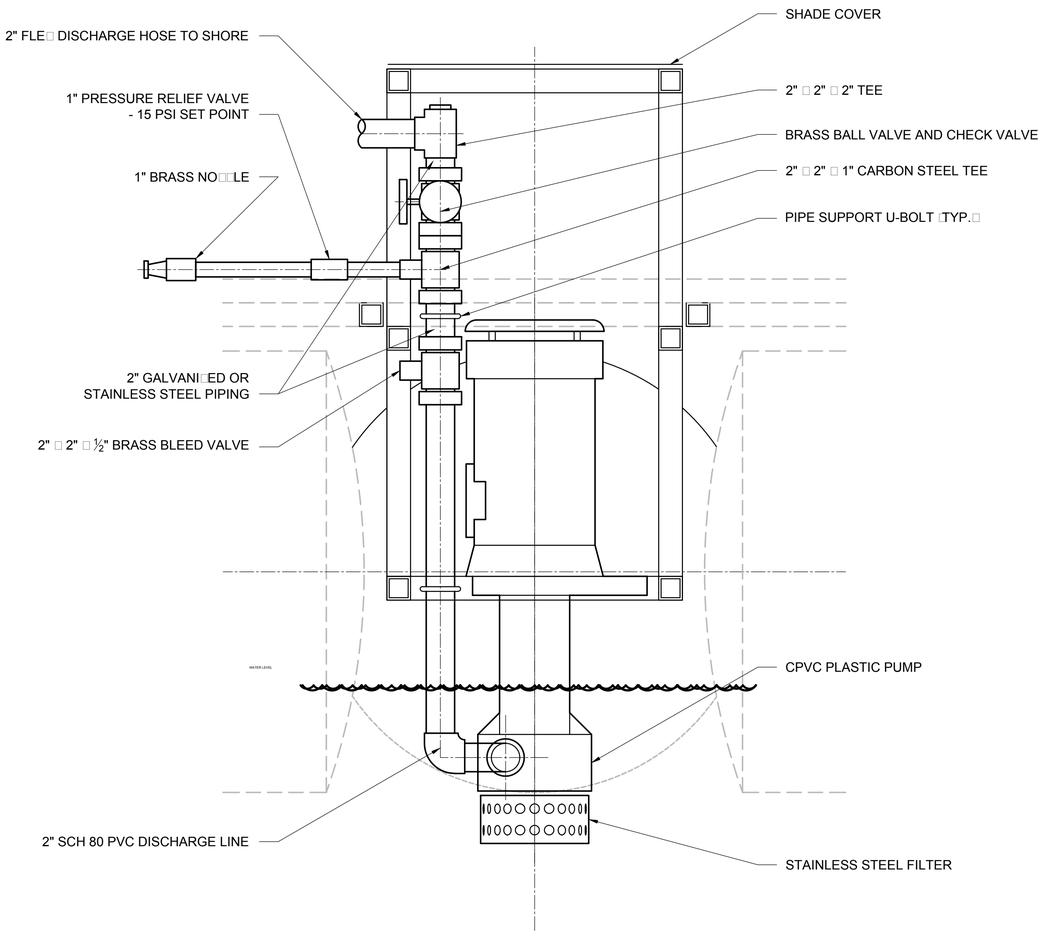

1 PUMPS AND VALVES
3" = 1'-0"

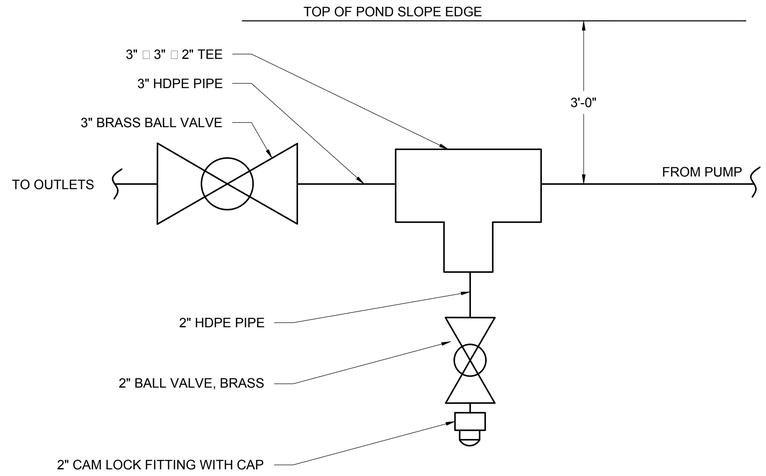

2 BYPASS ASSEMVLY
NOT TO SCALE

- FINAL DESIGN - FOR AGENCY APPROVAL ONLY

REGISTERED PROFESSIONAL ENGINEER BENJAMIN J. WUESTL C 67811 EXP 6/30/17 CIVIL STATE OF CALIFORNIA

ETIC ENGINEERING

ARCADIS

NO.	DATE	DESCRIPTION	GM/SPEC	DWN	CHKD	SUPV	APVD BY
0	11/18/15	FINAL DESIGN		AJW	KLD	BW	RAO

REVISIONS

APPROVED BY: RAO

SO | SUPV | DSGN | DWN | CHKD | OK | DATE | SCALES

TOPOCK GROUNDWATER REMEDIATION PROJECT

COMPRESSOR STATION PONDS UPGRADES PONTOON PUMPS AND VALVES

GAS TRANSMISSION & DISTRIBUTION
PACIFIC GAS AND ELECTRIC COMPANY
SAN FRANCISCO, CALIFORNIA

MICROFILM
BILL OF MATL
DWG LIST
SUPSDS
SUPSD BY
SHEET NO. of SHEETS: M-09-06
REV: 0

11/02/2015, 11:04, G:\Graphics\ARI\TOPOCK-01\Submittal_100%\DWG\as\M-Mechanical\M-09-01_02_04_05_06_07.dwg, Tab: M-09-06

N1808

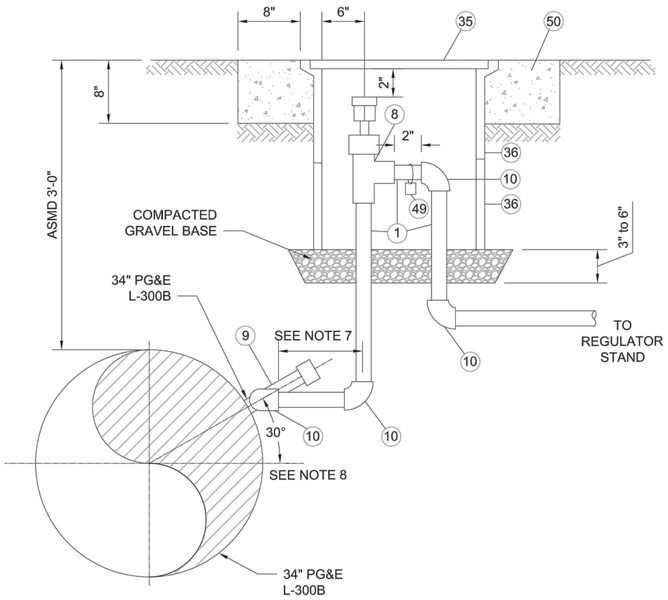

A SECTION
N.T.S.
M-09-01

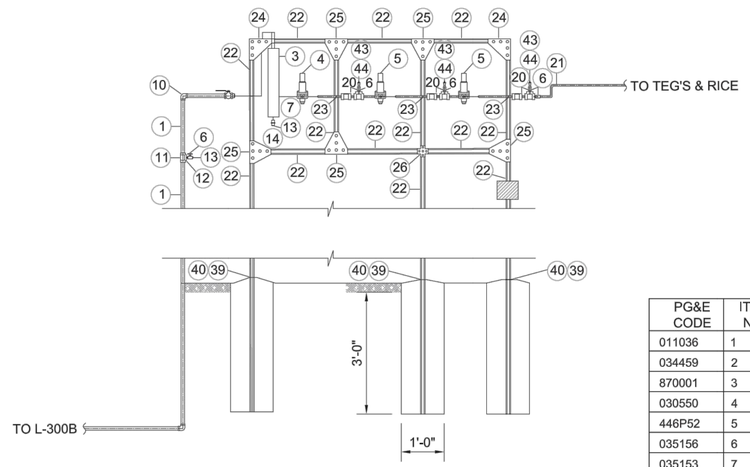

B REGULATOR ELEVATION
N.T.S.
M-09-01

STA. N/A
JOB NO.
B/M ITEM NO. 1

DESIGN CRITERIA
LOCATION CLASS 1
DESIGN FACTOR 0.72
FDP 894 PSIG 6.71 % SMYS
MAOP 894 PSIG 6.71 % SMYS
STRENGTH TEST PRESSURE
MAX. 1541 PSIG 15.01% SMYS
MIN. 1341 PSIG 13.06% SMYS
9240 PSIG 90 % SMYS
TEST MEDIUM WATER
PIPE SPEC API51 GRB SMLS
O.D. 1.050
W.T. 0.154 INCHES
WELD INSPECTION GAS (STD.D -40)*
RADIOGRAPHIC
20% MIN 1% OF EACH WELDERS
100% DAILY WORK

* VISUALLY INSPECT 100% OF ALL WELDS THAT ARE NOT RADIOGRAPHICALLY INSPECTED (THIS REQUIREMENT APPLIES EVEN IF NO RADIOGRAPHIC INSPECTIONS ARE REQUIRED.

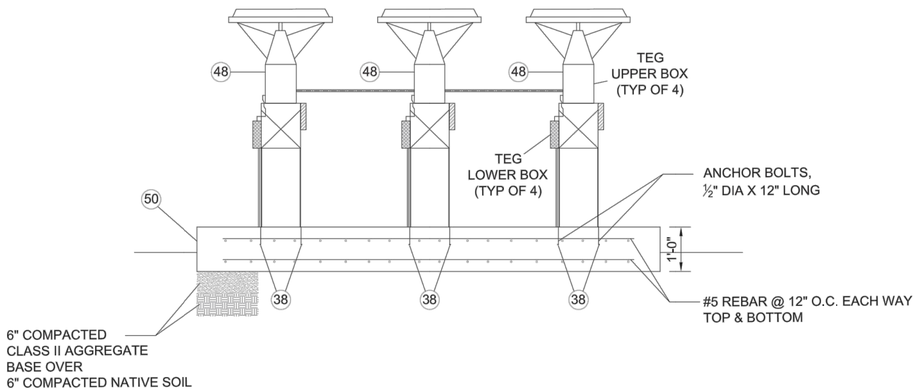

C TEG ELEVATION
N.T.S.
M-09-01

GM 134616 1956

EXIST PIPE SPECS
HEADER SIZE: 34.00
PIPE SPECS: API5L - X52 SAWL (DSAW)
WALL THICKNESS: 0.406 INCHES
PRESENT MAOP: 867
% SMYS @ MAOP: 69.81
MAXIMUM ALLOWABLE PRESSURE DURING WELDING (G.S. & S. D-22) (**620 PSIG)
**240 PSIG IF WELDING WITHIN 3" OF A LONGITUDINAL SEAM. CIRCUMFERENTIAL, AND ANY BRANCH WELD ON ANY TYPE OF PIPE EXCEPT THE LONGITUDINAL SEAM OF OSAW PIPE PER GAS STD D-22 PAGE 3 OF 14 SECT 3-B

LEGEND:

(1) REFERENCE ITME NUMBER IN SCHEDULE.

NOTES:

1. HANDY CAPS SHALL BE INSTALLED PER GS:S E-27.
2. NO UNDERGROUND WIRE SPLICES SHALL BE USED EXCEPT AT THE ANODE AND THE PIPELINE.
3. BURIED WIRE SPLICES UP TO NO. 10 WIRE SHALL BE INSTALLED PER GS:S O-12.
4. BURIED WIRE SPLICES GREATER THAN NO. 10 WIRE SHALL BE MADE USING SPLIT BOLT CONNECTORS AND A DRYCON WATER PROOFING KIT FROM FARWEST CORROSION CONTROL.
5. USE OF THIS ASSEMBLY IS UMITED TO FACILITIES WITH A DESIGN PRESSURE OF 1200 PSIG OR LESS.
6. THIS SHUT-OFF IS IN COMPLIANCE WITH GENERAL ORDER NO. 112-E, AND CODE OF FEDERAL REGULATIONS 49 CFR 192.203 (b)(2), "INSTRUMENT, CONTROL AND SAMPLING PIPE & COMPONENTS.
7. INSTALL SHUT-OFF AS NEAR AS PRACTICAL TO MAIN LINE.
8. SHOULD NOT INSTALL MUELLER TEE WITHIN 3" OF MAIN UNE LONGITUDINAL SEAM OR OTHER WELD. WELDING IS PERMITTED LESS THAN 3" FROM A WELD WITH SME APPROVAL.
9. CONFIRM MATERIALS AND METHODS WITH PG&E SERVICE REQUIREMENTS AND ANY REFERENCED PG&E GAS DESIGN STANDARDS.

SCHEDULE

PG&E CODE	ITEM NO.	QTY	DESCRIPTION	CATALOG OR DWG REF.
011036	1	550'	PIPE STEEL SEAMLESS 1.050" OD x D154" WALL STD. API-5L. GR B. SMLS. WRAP	GAS STD A-15
034459	2	1	VALVE. 3/4" BALL. THREADED. 2500 PIC. MARPAC	GAS STD F-20
870001	3	1	FILTER. WELKER. SULFUR REMOVAL. 1/4" FNPT	WELKER
030550	4	1	PILOT. MOONEY. SERIES 20. HP BK SPRING 200-500#	GAS STD HBO 1
446P52	5	2	PILOT. MOONEY. SERIES 20. HP BK SPRING 25-90#	GAS STD HBO 1
035156	6	3	VALVE NEEDLE. 1/4"MNPT X 1/4" FNPT PN H1VDC-22	GAS STD F-70
035153	7	1	VALVE NEEDLE. 1/4"MNPT X 1/4" FNPT PN H1VDC-2	GAS STD F-70
442573	8	1	MUELLER, 1" CURB VALVE TEE, MODEL No. H-17800	GAS STD A43.1
022445	9	1	MUELLER, TEE. 1' MODEL No. H-17656	GAS STD C-11
022588	10	10	ELBOW, 3/4" SOCKET WELD, 3000#	GAS STD B-21
021195	11	1	TEE, 3/4" THREADED. 3000#	GAS STD B-14
022268	12	2	BUSHING, 3/4" MNPT X 1/4" FNPT	INDUSTRIAL
021247	13	6	PLUG, 1/4" FORGED STEEL. HEX HEAD	GAS STD B10.1
870002	14	3	NIPPLE. 1/4". EXTRA STRONG. 2" LONG	GAS STD B13.1
870003	15	3	NIPPLE. 1/4". EXTRA STRONG. 6" LONG	GAS STD B13.1
870004	16	2	NIPPLE. 1/4". EXTRA STRONG. 18" LONG	GAS STD B13.1
870005	17	3	ELBOW, 1/4". SWAGELOK. SS-4-E, 7200 PSIG RATING	SWAGELOK
028140	18	19	MALE CONNECTOR, 3/8" TUBING X 1/4 PIPE THD	GAS STD B-62
028197	19	2	CONNECTER, ALL TUBE TEE, 3/8" TUBING	GAS STD B-62
870006	20	6	TEE, 1/4". SWAGELOK. SS-4-T, 7200 PSIG RATING	SWAGELOK
011015	21	45'	TUBING, 304SS, 3/8" OD, 0.035"WT	GAS STD A-22
870007	22	70'	STRUT, CHANNEL, SINGLE, 1-5/8"X 1-5/8", PN 3310T2	McMASTERCARR
870008	23	4	STRUT,CHANNEL, MOUNT CLAMPS, 3/8", PN 3115T13	McMASTERCARR
870009	24	2	STRUT CHANNEL, 5-HOLE GUSSET CORNER PLATE, PN 33125T22	McMASTERCARR
870010	25	5	STRUT CHANNEL, 5-HOLE GUSSET T-PLATE, 33125T92	McMASTERCARR
870011	26	1	STRUT,CHANNEL, CROSS PLATE, 33125T92	McMASTERCARR
870012	27	1	STRUT, SUPPORT BASE, 33145T32	McMASTERCARR
870013	28	1 PNG	STRUT, CLAMPING NUTS WITH SPRING, 3259T15	McMASTERCARR
294991	32	AS REQ'D	WIRE, #10 HMWPE WITH 47 MIL THICKNESS 600 VOLTS, SOLID COPPER, BLACK INSULATION	GAS STD 0-10
569382	33	1	LITTLE FINK, TEST LEAD BOX, 2-TERMINAL ORANGE	GAS STD 0-10.1
360469	34	1	CONDUIT, 1-1/4" PVC, SCHEDULE 40 (FOR LITTLE FINK)	GAS STD 0-10.1
041189	35	1	LID, TRAFFIC RATED (H-20), 17"(W) X 30"(L) X 12"(H) (INSIDE DIMENSIONS), (FOR USE AROUND GAS PIPING)	
041184	36	1	VALVE BOX, TRAFFIC RATED (H-20) 17"(W) X 30"(L) X 12"(H) (INSIDE DIMENSIONS), (FOR USE AROUND GAS PIPING)	
870016	37	256'	#5 REINFORCING BAR	
870017	38	20	ANCHOR BOLT, 1/2" DIA X 12" LONG	
870018	39	9'	SONATUBE. 12" DIAMETER	
870019	40	3 YD	CONCRETE, FC= 3500 PSI	
043271	41	1	BODY, CONCRETE VALVE FRAME, 10-3/8" X 12", GR-5	GAS STD K-40
043225	42	1	CONCRETE, VALVE CAST IRON 11-1/8" DIA, FULL TRAFFIC	GAS STD K-40
870020	43	3	QUICK CONNECT FITING, SS-0C6-B-4PM, SWAGELOK	SWAGELOK
870021	44	3	BODY PROTECTOR, SS-QC4-BP, SWAGELOK	SWAGELOK
159260	45	4	CARTRIDGE, CALDWELD OR THERMOWELD 15 GRAM	GAS STD 0-10
0303755	46	4	SLEEVE, COPPER, THERMOWELD A200 OR EQUIVALENT	GAS STD 0-10
0569383	47	4	HANDY CAP, ROYSTON, 4" X 4" PATCH	GAS STD F-27
N/A	48	4	THERMOELECTRIC GENERATOR, GLOBAL THERMOELECTRIC MODEL 8550	GLOBAL THERMOELECTRIC
	49	1	VALVE IDENTIFICATION TAG	
	50	TO SUIT	CONCRETE, 4000 PSI	
	51	3	TEE, MALE BRANCH, ⅜" TB X ¼" MNPT	SWAGELOK
	52	2	ELBOW, ⅜" TB X ¼" MNPT	SWAGELOK
	53	4	VALVE, BALL ¼" NPT, 2000LB	GAS STD F-70

- FINAL DESIGN - FOR AGENCY APPROVAL ONLY

REGISTERED PROFESSIONAL ENGINEER
BENJAMIN J. WUESTE
C 67811
EXP 6/30/17
CIVIL
STATE OF CALIFORNIA

ETIC ENGINEERING
ARCADIS

NO.	DATE	DESCRIPTION	GM/SPEC	DWN	CHKD	SUPV	APVD BY
1	11/18/15	FINAL DESIGN	AJW	KLD	BW	RAO	
0	12/02/14	SUPPLEMENTAL PRE-FINAL (90%) DESIGN	DSA	JLA	SAS		

REVISIONS

APPROVED BY	
RAO	SO
	SUPV
	DSGN
	DWN
	CHKD
	OK
	DATE
	SCALES

TOPOCK GROUNDWATER REMEDIATION PROJECT

TEG AND CONNECTION DETAILS

GAS TRANSMISSION & DISTRIBUTION
PACIFIC GAS AND ELECTRIC COMPANY
SAN FRANCISCO, CALIFORNIA

MICROFILM	
BILL OF MATL	
DWG LIST	
SUPSDS	
SUPSD BY	
SHEET NO.	of SHEETS
M-09-07	REV 1

11/12/2015, 09:02, G:\Graphics\ARI\TOPOCK-01\Submittal_100%\DWG\as\M-Mechanical\M-09-01_02_04_05_06_07.dwg, Tab: M-09-07

N1808

PANEL:	TCS-P	LOCATION:	TCS POND GENERATOR BUILDING								CABINET MOUNTING:	SURFACE
VOLTS:	208Y/120V	PHASE:	3	WIRE:	4		ENCLOSURE: NEMA TYPE	1			RATING:	10 KAIC
FEED:	BOTTOM, 100A MAIN C/B		NEUTRAL:	100%	NOTE:							

LOAD SERVED	LOAD (KVA) A	B	C	BREAKER AMP	POLE	CKT	PH	CKT	BREAKER AMP	POLE	LOAD (KVA) A	B	C	LOAD SERVED
PONTOON PUMP	1.3			20	1	1	A	2	20	1	1.3			PONTOON PUMP
" "		1.3		20	1	3	B	4	20	1		1.3		" "
" "			1.3	20	1	5	C	6	20	1			1.3	" "
POND 1&2 SUBMERSIBLE PUMP	1.9			30	1	7	A	8	30	1	1.9			POND 2&3 SUBMERSIBLE PUMP
POND 3&4 SUBMERSIBLE PUMP		1.9		30	1	9	B	10	20	1		1.5		INVERTER (POND LIGHTING)
SPARE				20	1	11	C	12	20	1				SPARE
SPARE				20	1	13	A	14	20	1				SPARE
SPARE				20	1	15	B	16	20	1				SPARE
SPARE				20	1	17	C	18	20	1				SPARE
SPARE				20	1	19	A	20	20	1				SPARE
SPACE						21	B	22						SPACE
SPACE						23	C	24						SPACE
SPACE						25	A	26						SPACE
SPACE						27	B	28						SPACE
SPACE						29	C	30						SPACE
	3.2										3.2			6.4
SUB-TOTAL CONNECTED KVA:		3.2										2.8		6.0
			1.3										1.3	2.6
											TOTAL CONNECTED KVA:			15.0

- FINAL DESIGN -
FOR AGENCY
APPROVAL ONLY

REGISTERED PROFESSIONAL ENGINEER
JOHN M. SIOCHI
20532
Exp. 9-30-17
ELECTRICAL
STATE OF CALIFORNIA

ETIC ENGINEERING

ARCADIS

NO.	DATE	DESCRIPTION	GM/SPEC	DWN	CHKD	SUPV	APVD BY
1	11/18/15	FINAL DESIGN		AJW	JPB	JMS	RAO
0	9/8/14	PRE-FINAL (90%) DESIGN		MJY	MK	RB	

REVISIONS

APPROVED BY	
RAO	
	SO
	SUPV
	DSGN
	DWN
	CHKD
	OK
	DATE
	SCALES

TOPOCK GROUNDWATER REMEDIATION PROJECT

COMPRESSOR STATION PONDS UPGRADES ELECTRICAL SCHEDULES

GAS TRANSMISSION & DISTRIBUTION
PACIFIC GAS AND ELECTRIC COMPANY
SAN FRANCISCO, CALIFORNIA

MICROFILM	
BILL OF MATL	
DWG LIST	
SUPSDS	
SUPSD BY	
SHEET NO.	of SHEETS
E-09-01	REV 1

N1B08

11/04/2015, 10:51, G:\Graphics\AR\TOPOCK-01\Submittal_100%\DWG\sE-ElectricalIE-09-01.dwg, Tab: E-09-01

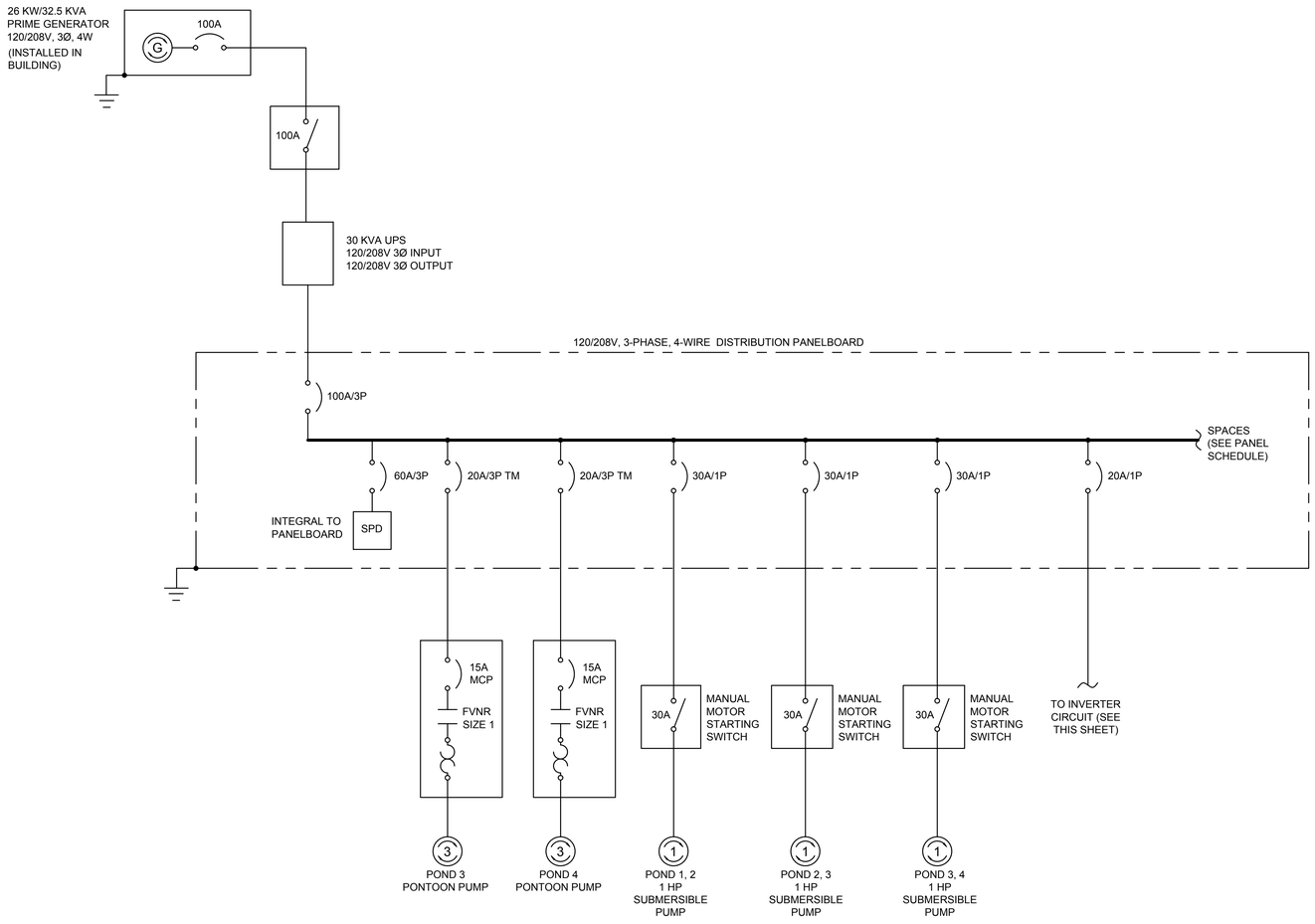

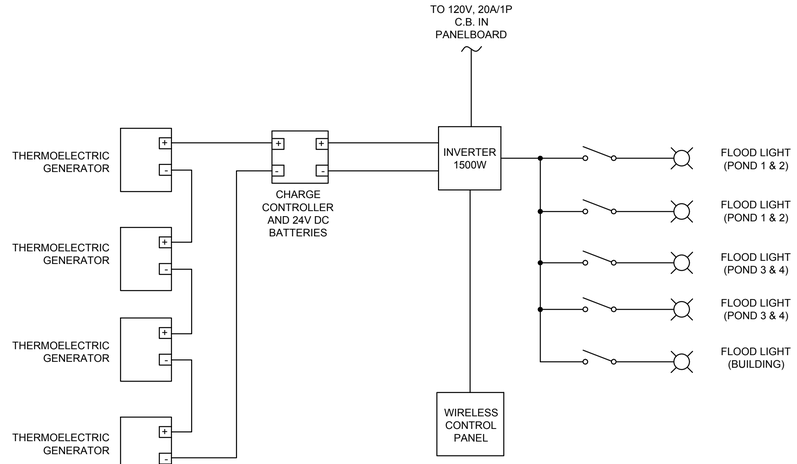

SINGLE LINE DIAGRAM

- FINAL DESIGN -
FOR AGENCY
APPROVAL ONLY

REGISTERED PROFESSIONAL ENGINEER
JOHN M. SIDOTI
20532
Exp. 9-30-17
ELECTRICAL
STATE OF CALIFORNIA

ETIC ENGINEERING

ARCADIS

NO.	DATE	DESCRIPTION	GM/SPEC	DWN	CHKD	SUPV	APVD	BY
2	11/18/15	FINAL DESIGN		AJW	JPB	JMS	RAO	
1	8/5/15	SUPPLEMENTAL PRE-FINAL (90%) DESIGN		DSA	JLA	SS		
0	9/8/14	PRE-FINAL (90%) DESIGN		DSA	RB	RB		

REVISIONS

APPROVED BY: RAO

SO
SUPV
DSGN
DWN
CHKD
OK
DATE
SCALES

TOPOCK GROUNDWATER REMEDIATION PROJECT

COMPRESSOR PONDS UPGRADES
ELECTRICAL SINGLE LINE
DIAGRAM

GAS TRANSMISSION & DISTRIBUTION
PACIFIC GAS AND ELECTRIC COMPANY
SAN FRANCISCO, CALIFORNIA

MICROFILM
BILL OF MATL
DWG LIST
SUPSDS
SUPSD BY
SHEET NO. of SHEETS

E-09-02 | REV 2

N1B08

11/04/2015, 10:52, G:\Graphics\ART\TOPOCK-01\Submittal_100%\DWG\E-Electrical\E-09-02.dwg, 1ab: E-09-02

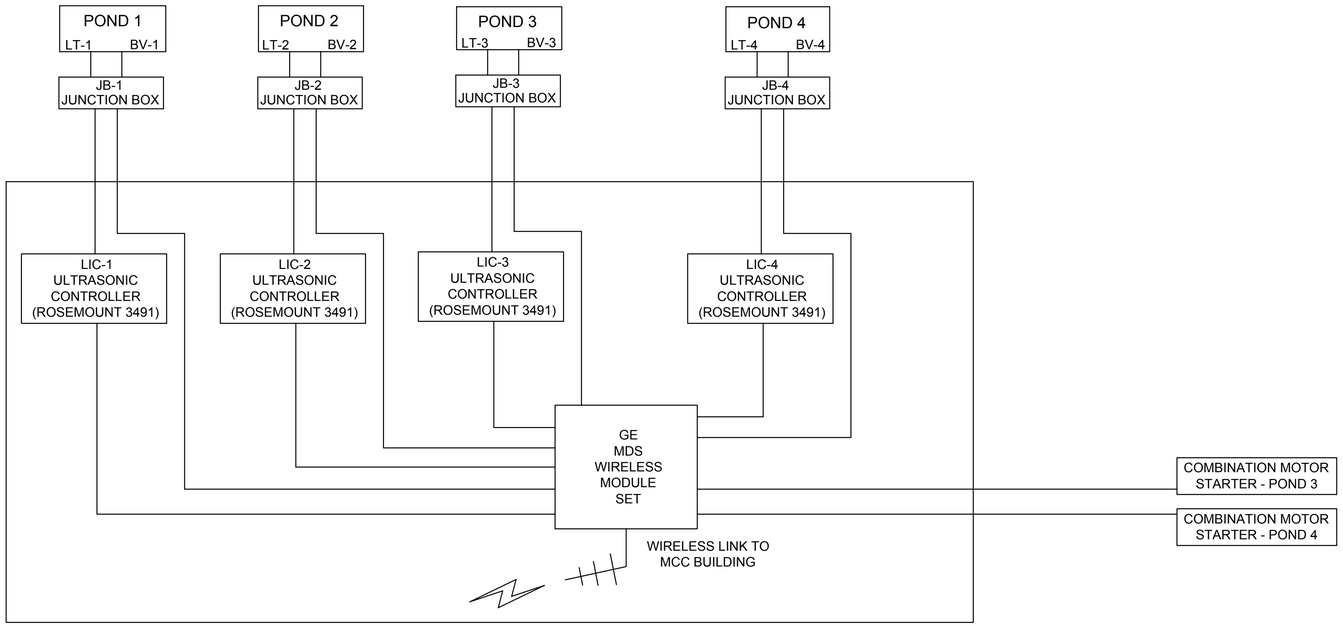

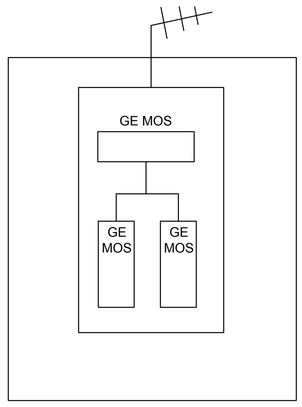

WIRELESS CONTROL PANEL
N.T.S.

LEGEND:

LT - LEVEL TRANSMITTER
BV - BUTTERFLY VALVE
JB - JUNCTION BOX

CONTROL BUILDING (EXISTING)
N.T.S.

- FINAL DESIGN -
FOR AGENCY
APPROVAL ONLY

REGISTERED PROFESSIONAL ENGINEER
JOHN M. SIDOTI
20532
Exp. 9-30-17
ELECTRICAL
STATE OF CALIFORNIA

ETIC ENGINEERING

ARCADIS

NO.	DATE	DESCRIPTION	GM/SPEC	DWN	CHKD	SUPV	APVD BY
1	11/18/15	FINAL DESIGN		AJW	JPB	JMS	RAO
0	9/8/14	PRE-FINAL (90%) DESIGN		MJY	MK	RB	

REVISIONS

APPROVED BY	
RAO	SO
	SUPV
	DSGN
	DWN
	CHKD
	OK
	DATE
	SCALES

TOPOCK GROUNDWATER REMEDIATION PROJECT

COMPRESSOR STATION PONDS UPGRADES COMMUNICATIONS BLOCK DIAGRAM

GAS TRANSMISSION & DISTRIBUTION

PACIFIC GAS AND ELECTRIC COMPANY
SAN FRANCISCO, CALIFORNIA

MICROFILM	
BILL OF MATL	
DWG LIST	
SUPSDS	
SUPSD BY	
SHEET NO.	of SHEETS
E-09-03	REV 1

N1808

11/04/2015, 11:00, G:\Graphics\ART\TOPOCK-01\Submittal_100%\DWG\E-Electrical\E-09-03.dwg, Tab: E-09-03

DC POWER SUPPLY

TB DC PS

1		
2		
3		
4		
5		
6		
7		
8		
9		
10		
11		
12		
13		
14		
15		
16		
17		
18		
19		
20		
21		
22		
23		
24		
25		
26		
27		
28		
29		
30		
31		
32		
33		
34		
35		
36		

TB DC

1	
2	
3	
4	
5	
6	
7	
8	
9	
10	
11	
12	
13	
14	
15	
16	
17	
18	
19	
20	

TB AC

1	
2	
3	
4	
5	
6	
7	
8	
9	
10	
11	
12	
13	
14	
15	
16	
17	
18	
19	
20	

POND 1
ROSEMOUNT LEVEL
TRANSDUCER

POND 2
ROSEMOUNT LEVEL
TRANSDUCER

POND 3
ROSEMOUNT LEVEL
TRANSDUCER

POND 4
ROSEMOUNT LEVEL
TRANSDUCER

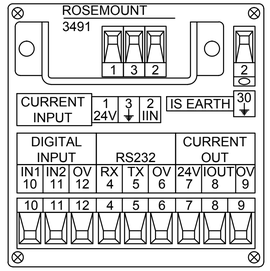

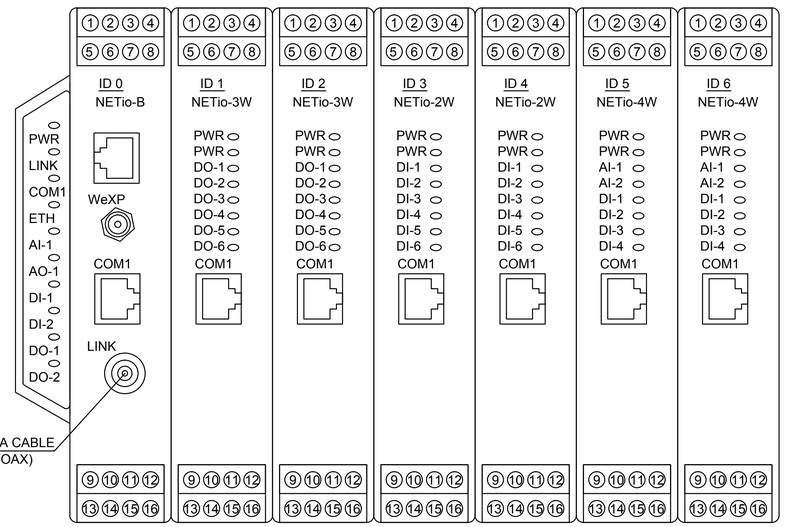

GE MDS: NETioE MODULE CONFIGURATION

TAG	I/O	DESCRIPTION	CKT
ID0	AI1		---
	AO1		---
	DI1		---
	DI2		---
	DO1		---
	DO2		---
ID1	DO1	BV-1 OPEN	---
	DO2	BV-1 CLOSE	---
	DO3	BV-2 OPEN	---
	DO4	BV-2 CLOSE	---
	DO5	BV-3 OPEN	---
	DO6	BV-3 CLOSE	---
ID2	DO1	BV-4 OPEN	---
	DO2	BV-4 CLOSE	---
	DO3		---
	DO4		---
	DO5	CR 1 - POND 3 PUMP RUN	---
	DO6	CR 2 - POND 4 PUMP RUN	---
ID3	DI1	BV-1 OPEN	---
	DI2	BV-1 CLOSE	---
	DI3	BV-2 OPEN	---
	DI4	BV-2 CLOSE	---
	DI5	BV-3 OPEN	---
	DI6	BV-3 CLOSE	---

TAG	I/O	DESCRIPTION	CKT
ID4	DI1	BV-4 OPEN	---
	DI2	BV-4 CLOSE	---
	DI3		---
	DI4		---
	DI5		---
	DI6		---
ID5	AI1	POND 1 LEVEL	---
	AI2	POND 2 LEVEL	---
	DI1		---
	DI2		---
	DI3		---
	DI4		---
ID6	AI1	POND 3 LEVEL	---
	AI2	POND 4 LEVEL	---
	DI1		---
	DI2		---
	DI3		---
	DI4		---

TB-A

1		
2		
3		
4		
5		
6		
7		
8		
9		
10		
11		
12		
13		
14		
15		
16		
17		
18		
19		
20		

TB JB-1

1		
2		
3		
4		
5		
6		
7		
8		

TB, BV-1

1		ISO
2		ISO
3		ISO
4		SUB
5		SUB
6		SUB

TB JB-2

1		
2		
3		
4		
5		
6		
7		
8		

TB, BV-2

1		ISO
2		ISO
3		ISO
4		SUB
5		SUB
6		SUB

TB-B

1		
2		
3		
4		
5		
6		
7		
8		
9		
10		
11		
12		
13		
14		
15		
16		
17		
18		
19		
20		

TB JB-3

1		
2		
3		
4		
5		
6		
7		
8		

TB, BV-3

1		ISO
2		ISO
3		ISO
4		SUB
5		SUB
6		SUB

TB JB-4

1		
2		
3		
4		
5		
6		
7		
8		

TB, BV-4

1		ISO
2		ISO
3		ISO
4		SUB
5		SUB
6		SUB

CR 1

1		5
2		6
3		7
4		8

CR 2

1		5
2		6
3		7
4		8

REGISTERED PROFESSIONAL ENGINEER
JOHN M. SIOOTIAN
20532
Exp. 9-30-17
ELECTRICAL
STATE OF CALIFORNIA

- FINAL DESIGN -
FOR AGENCY APPROVAL ONLY

ETIC ENGINEERING

ARCADIS

NO.	DATE	DESCRIPTION	GM/SPEC	DWN	CHKD	SUPV	APVD BY
1	11/18/15	FINAL DESIGN		AJW	JPB	JMS	RAO
0	9/8/14	PRE-FINAL (90%) DESIGN		MJY	MK	RB	

REVISIONS

APPROVED BY: RAO

SO
SUPV
DSGN
DWN
CHKD
OK
DATE
SCALES

TOPOCK GROUNDWATER REMEDIATION PROJECT

COMPRESSOR STATION PONDS UPGRADES COMMUNICATIONS PANEL DETAILS

GAS TRANSMISSION & DISTRIBUTION
PACIFIC GAS AND ELECTRIC COMPANY
SAN FRANCISCO, CALIFORNIA

MICROFILM
BILL OF MATL
DWG LIST
SUPSDS
SUPSD BY
SHEET NO. E-09-04 of SHEETS
REV 1

N1808

11/04/2015, 11:01, G:\Graphics\ARTOPOCK-01\Submittal_100%\DWGs\E-Electrical\E-09-04.dwg, Tab: E-09-04

BILL OF MATERIAL			
ITEM	QTY	DESCRIPTION	NOTES
1	SEE TABLE 1	CONCRETE - 4000 PSI MIN. COMP. STR.	
1	SEE TABLE 2	LONGITUDINAL REBAR ASTM A65, GR. 60	
1	SEE TABLE 3	PIER TIE REBAR ASTM A65, GR. 61	
1	4	RIGHT ANGLE ANCHOR BOLT, 1" DIA. X 40" L, ASTM F1554 GR. 55	REFER TO APPLETON ROUND TAPERED STEEL POLES INSTALLATION REQ'TS.
1	1	APPLETON - 20' HINGED STEEL POLE #G-PHSH-20-GAL	
1	1	CROUSE-HINDS SLIPFITTER - #SFA6	
1	1	CROUSE-HINDS LED LAMP - #FMV-5L-C-Y/NV1, W/VISOR #DSV1	
1	1	CROUSE-HINDS 3/4", 20A, 1 POLE, GENERAL USE SNAP SWITCH - #EDS2129	
1	1	CROUSE-HINDS 3/4" CONDUIT SEAL - #EYS21	
1	AS REQ'D.	TSC EPOXY SEALING COMPOUND	
1	1	CROUSE-HINDS 3/4" CONDUIT SERVICE ENTRANCE ELBOW - #LBY25	

TABLE NO. 1				
POLE HEIGHT	CONCRETE QTY.	LONGITUDINAL REBAR	PIER TIE REBAR	BOLT CIRCLE
20' - 0"	0.52 C.Y.	(10) #5	(9) #3	DETERMINED BY FIELD CONTRACTOR

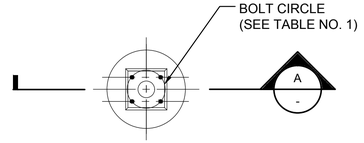

1 LIGHT POLE FOUNDATION PLAN
1/2" = 1'-0"

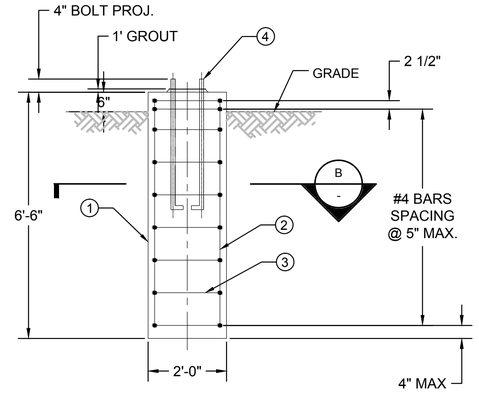

A SECTION
1/2" = 1'-0"

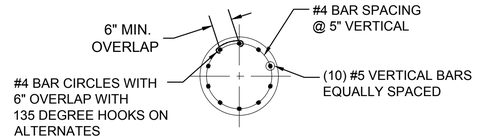

B SECTION
1/2" = 1'-0"

CONCRETE CLEAR COVER:
2" - TOP
2" - SIDE
3" - BOTTOM

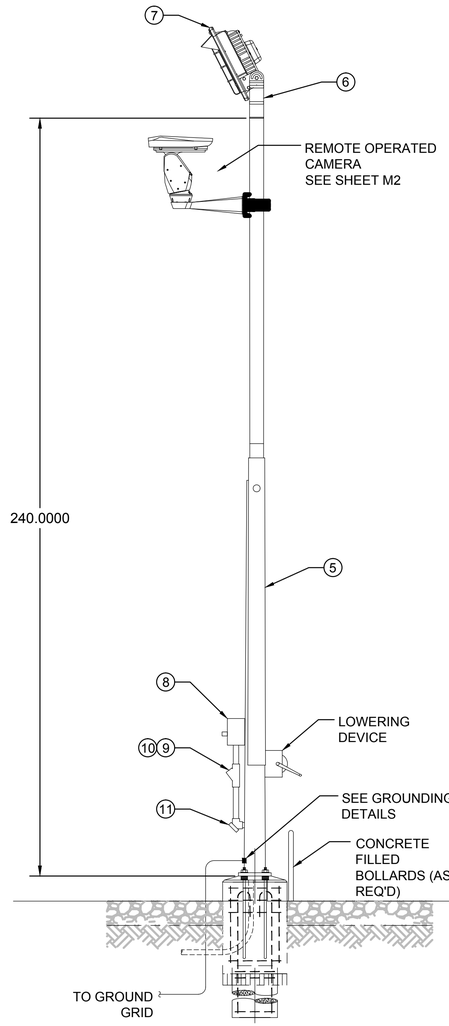

2 LIGHT POLE DETAIL
1/2" = 1'-0"

0 2 4 6
SCALE: 1/2"=1'-0"

- FINAL DESIGN - FOR AGENCY APPROVAL ONLY

REGISTERED PROFESSIONAL ENGINEER JOHN M. SIDOTI 20532 Exp. 9-30-17 ELECTRICAL STATE OF CALIFORNIA

ARCADIS

NO.	DATE	DESCRIPTION	GM/SPEC	DWN	CHKD	SUPV	APVD BY
1	11/18/15	FINAL DESIGN	AJW	JPB	JMS	RAO	
0	9/8/14	PRE-FINAL (90%) DESIGN	MJY	MK	RB		

REVISIONS

APPROVED BY: RAO

SO
SUPV
DSGN
DWN
CHKD
OK
DATE
SCALES

TOPOCK GROUNDWATER REMEDIATION PROJECT

COMPRESSOR STATION PONDS UPGRADES AUXILIARY EQUIPMENT DETAILS

GAS TRANSMISSION & DISTRIBUTION

PACIFIC GAS AND ELECTRIC COMPANY
SAN FRANCISCO, CALIFORNIA

MICROFILM
BILL OF MATL
DWG LIST
SUPSDS
SUPSD BY
SHEET NO. of SHEETS: E-09-05
REV: 1

N1808

11/04/2015, 11:10, G:\Graphics\ART\TOPOCK-01\Submittal_100%\DWG\E-Electrical\E-09-05.dwg, Tab: E-09-05

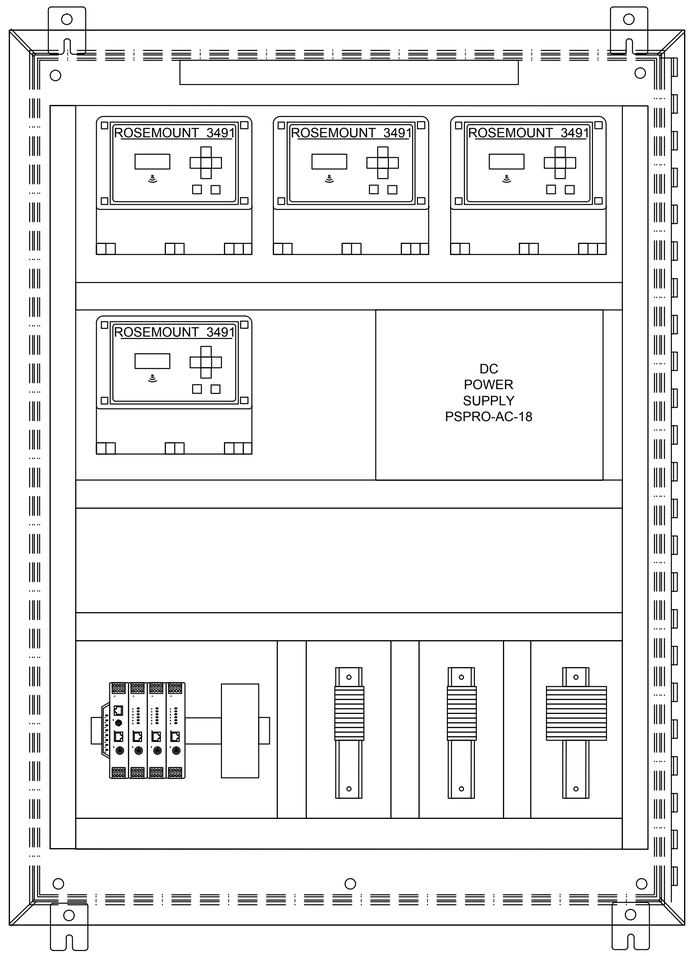

CONTROLS CABINET DETAIL

N.T.S.

- FINAL DESIGN -
FOR AGENCY
APPROVAL ONLY

REGISTERED PROFESSIONAL ENGINEER
JOHN M. SIDOTI
20532
Exp. 9-30-17
ELECTRICAL
STATE OF CALIFORNIA

ETIC ENGINEERING

ARCADIS

NO.	DATE	DESCRIPTION	GM/SPEC	DWN	CHKD	SUPV	APVD BY
1	11/18/15	FINAL DESIGN		AJW	JPB	JMS	RAO
0	9/8/14	PRE-FINAL (90%) DESIGN		MJY	MK	RB	

REVISIONS

APPROVED BY: RAO

SO
SUPV
DSGN
DWN
CHKD
OK
DATE
SCALES

TOPOCK GROUNDWATER REMEDIATION PROJECT

COMPRESSOR STATION PONDS UPGRADES ELECTRICAL DISTRIBUTION PANEL

GAS TRANSMISSION & DISTRIBUTION
PACIFIC GAS AND ELECTRIC COMPANY
SAN FRANCISCO, CALIFORNIA

MICROFILM
BILL OF MATL
DWG LIST
SUPSDS
SUPSD BY
SHEET NO. of SHEETS

E-09-06

REV 1

11/04/2015, 11:13, G:\Graphics\AR\TOPOCK-01\Submittal_100%\DWG\E-Electrical\E-09-06.dwg, Tab: E-09-06

N1808

CONDITIONED WATER STORAGE TANK FARM

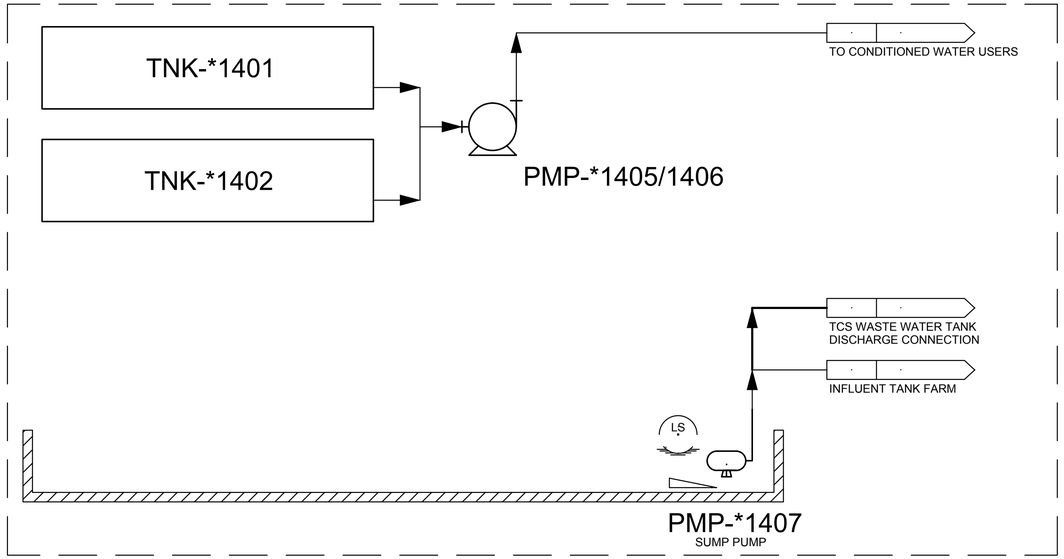

DECONTAMINATION PAD
TCS TRUCK FILL STATION

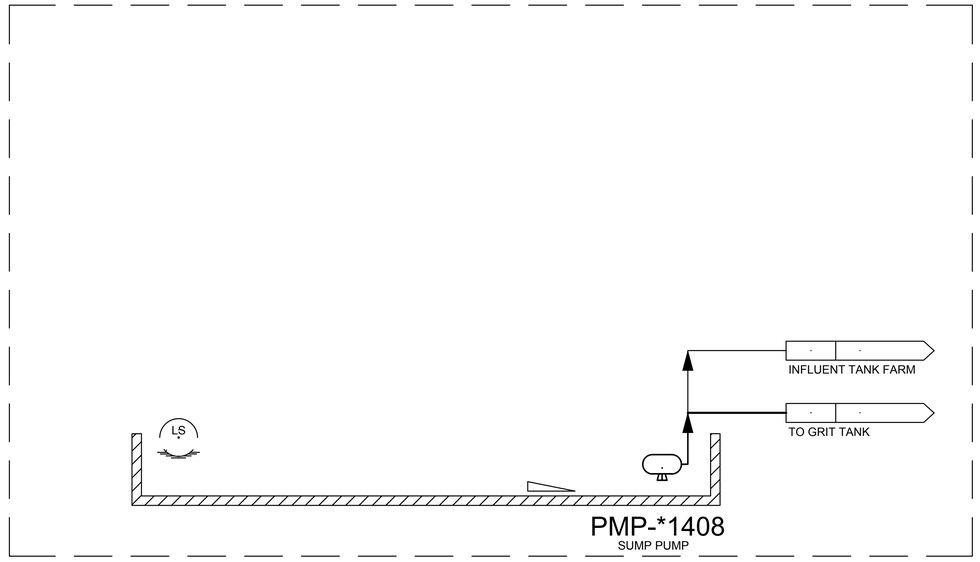

INFLUENT TANK FARM

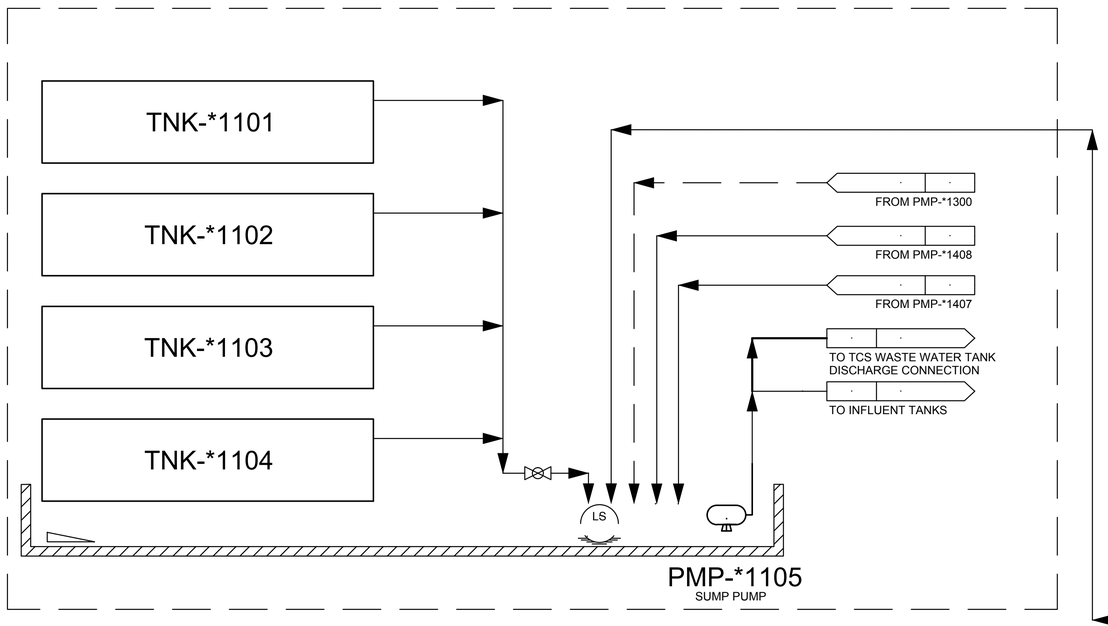

FIRST FLOOR
REMEDY PRODUCED WATER CONDITIONING PLANT

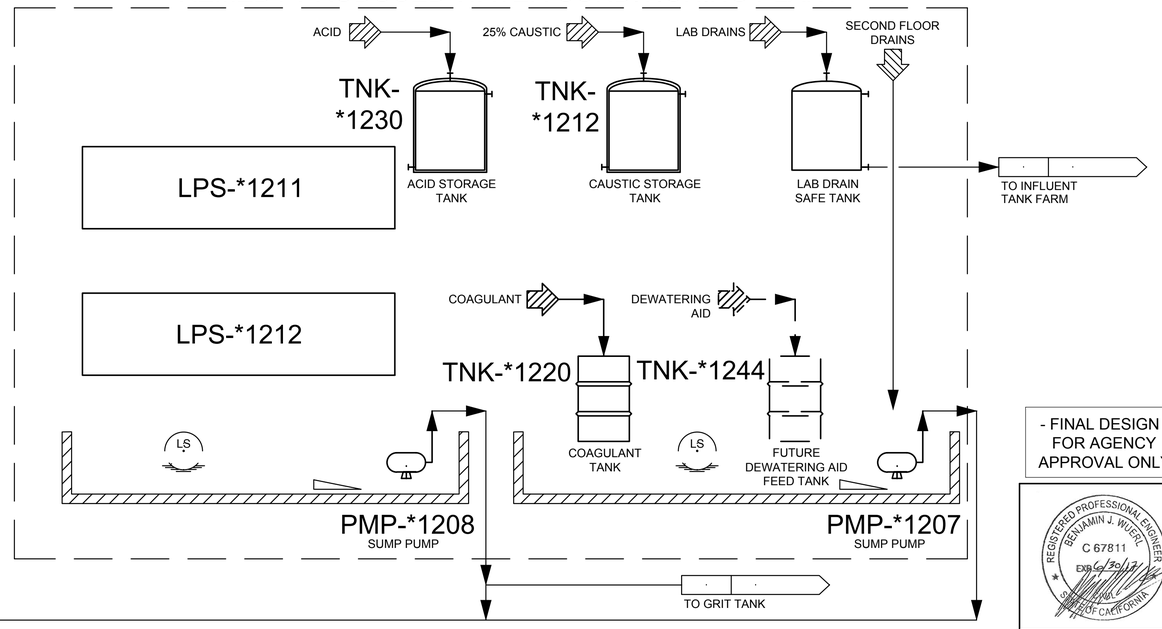

- FINAL DESIGN -
FOR AGENCY
APPROVAL ONLY

REGISTERED PROFESSIONAL ENGINEER
BENJAMIN J. WUERL
C 67811
Exp 6/30/17
CIVIL
STATE OF CALIFORNIA

ETIC ENGINEERING

ARCADIS

NO.	DATE	DESCRIPTION	GM/SPEC	DWN	CHKD	SUPV	APVD BY
3	11/18/15	FINAL DESIGN		AJW	JPB	BW	RAO
2	9/8/14	PRE-FINAL (90%) DESIGN		MBY	CB	JP	CH
1	4/5/13	INTERMEDIATE (60%) DESIGN		MBY	KM	JP	CH
0	11/11/11	PRELIMINARY (30%) DESIGN		PC	JP	PT	CH

REVISIONS

APPROVED BY	
	SO
	SUPV
RAO	DSGN
	DWN
	CHKD
	OK
	DATE
	SCALES

TOPOCK GROUNDWATER REMEDIATION PROJECT

PROCESS DIAGRAM
SECONDARY CONTAINMENT FOR TCS / REMEDY PRODUCED WATER

GAS TRANSMISSION & DISTRIBUTION

PACIFIC GAS AND ELECTRIC COMPANY
SAN FRANCISCO, CALIFORNIA

MICROFILM	
BILL OF MATL	
DWG LIST	
SUPSDS	
SUPSD BY	
SHEET NO. of SHEETS	
G-10-01	REV 3

N1808

11/04/2015, 12:19, G:\Graphics\AR\TOPOCK-01\Submittal_100%\DWG\G-General\G-10-01.dwg, Tab: G-10-01

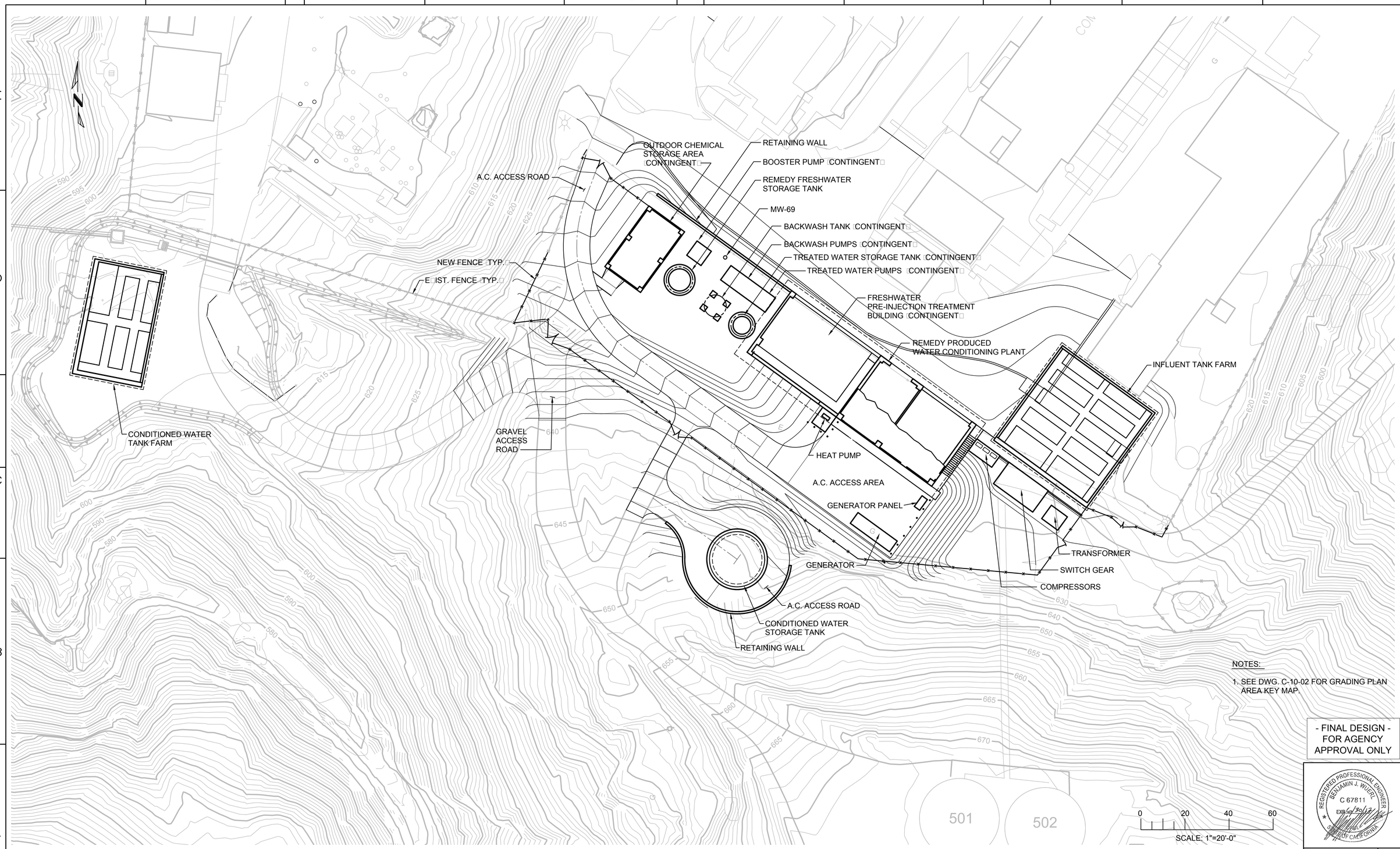

NOTES:

1. SEE DWG. C-10-02 FOR GRADING PLAN AREA KEY MAP.

- FINAL DESIGN - FOR AGENCY APPROVAL ONLY

REGISTERED PROFESSIONAL ENGINEER BENJAMIN J. WUERL C 67811 EXP. 6/30/17 STATE OF CALIFORNIA

ETIC ENGINEERING

ARCADIS

NO.	DATE	DESCRIPTION	GM/SPEC	DWN	CHKD	SUPV	APVD BY
2	11/18/15	FINAL DESIGN		AJW	WLM	BW	RAO
1	9/8/14	PRE-FINAL (90%) DESIGN		WTH	VMB	VMB	VMB
0	4/5/13	INTERMEDIATE (60%) DESIGN		WTH	VMB	VMB	VMB

REVISIONS

APPROVED BY: RAO

SO / SUPV / DSGN / DWN / CHKD / OK / DATE / SCALES

TOPOCK GROUNDWATER REMEDIATION PROJECT

TCS AREA GENERAL SITE PLAN

GAS TRANSMISSION & DISTRIBUTION
PACIFIC GAS AND ELECTRIC COMPANY
SAN FRANCISCO, CALIFORNIA

MICROFILM
BILL OF MATL
DWG LIST
SUPSDS
SUPSD BY
SHEET NO. of SHEETS
C-10-01 REV 2

11/03/2015, 10:40, G:\Graphics\AR\TOPOCK-01\Submittal_100%\DWGs\C-Ci\II\C-10-01.DWG, Tab: C-10-01

N1808

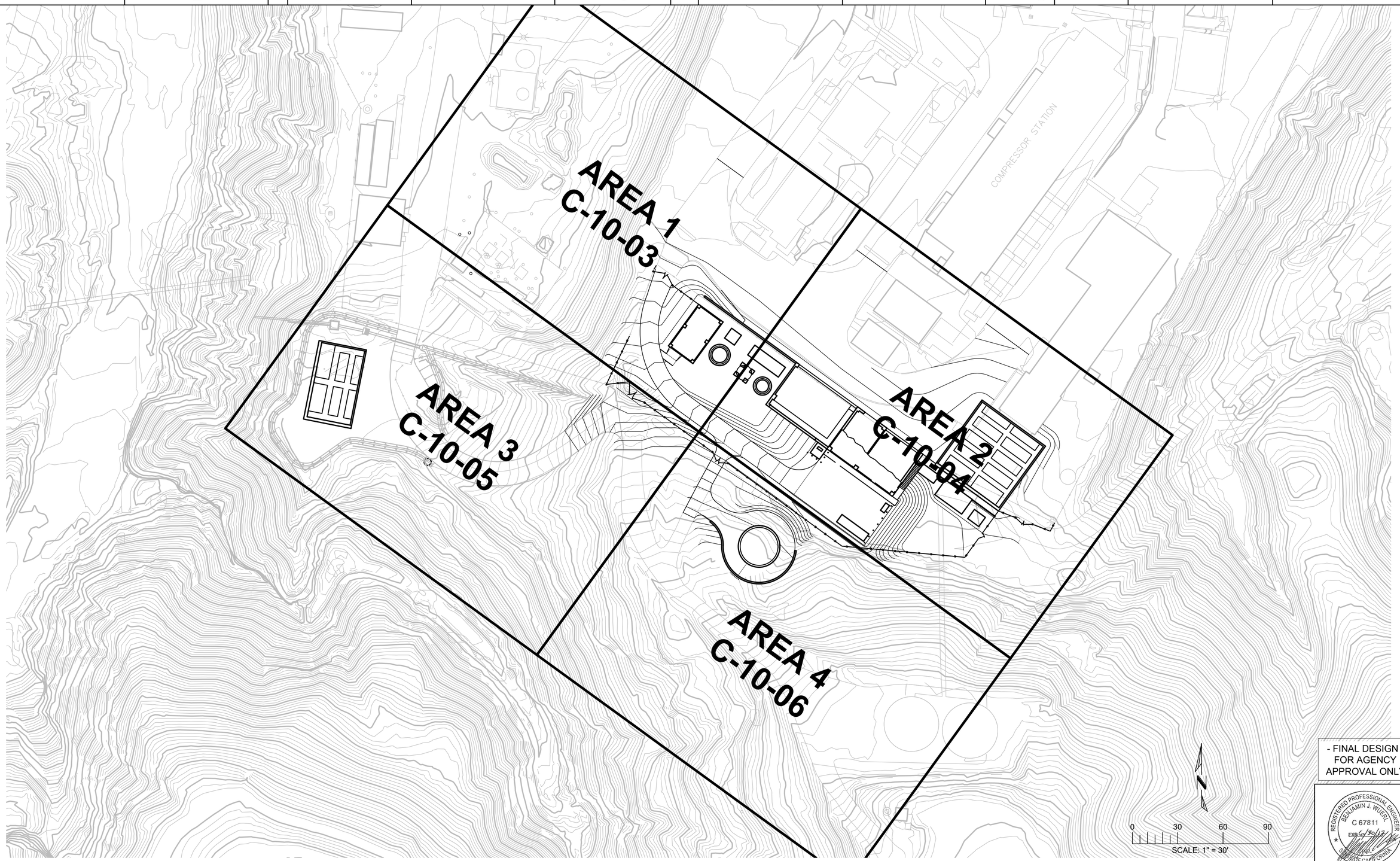

- FINAL DESIGN -
FOR AGENCY
APPROVAL ONLY

REGISTERED PROFESSIONAL ENGINEER
BENJAMIN J. WUERL
C 67811
EXP 6/30/17
STATE OF CALIFORNIA

ETIC ENGINEERING

ARCADIS

NO.	DATE	DESCRIPTION	GM/SPEC	DWN	CHKD	SUPV	APVD BY
1	11/18/15	FINAL DESIGN		AJW	WLM	BW	RAO
0	9/8/14	PRE-FINAL (90%) DESIGN		WTH	VMB	VMB	VMB

REVISIONS

APPROVED BY	
RAO	SO
	SUPV
	DSGN
	DWN
	CHKD
	OK
	DATE
	SCALES

TOPOCK GROUNDWATER REMEDIATION PROJECT

TCS AREA KEY MAP

GAS TRANSMISSION & DISTRIBUTION
PACIFIC GAS AND ELECTRIC COMPANY
SAN FRANCISCO, CALIFORNIA

MICROFILM	
BILL OF MATL	
DWG LIST	
SUPSDS	
SUPSD BY	
SHEET NO. of SHEETS	
C-10-02	REV 1

N1808

11/03/2015, 10:45, G:\Graphics\ARI\TOPOCK-01\Submittal_100%\DWGs\C-Ci IIIC-10-02.dwg, Tab: C-10-02

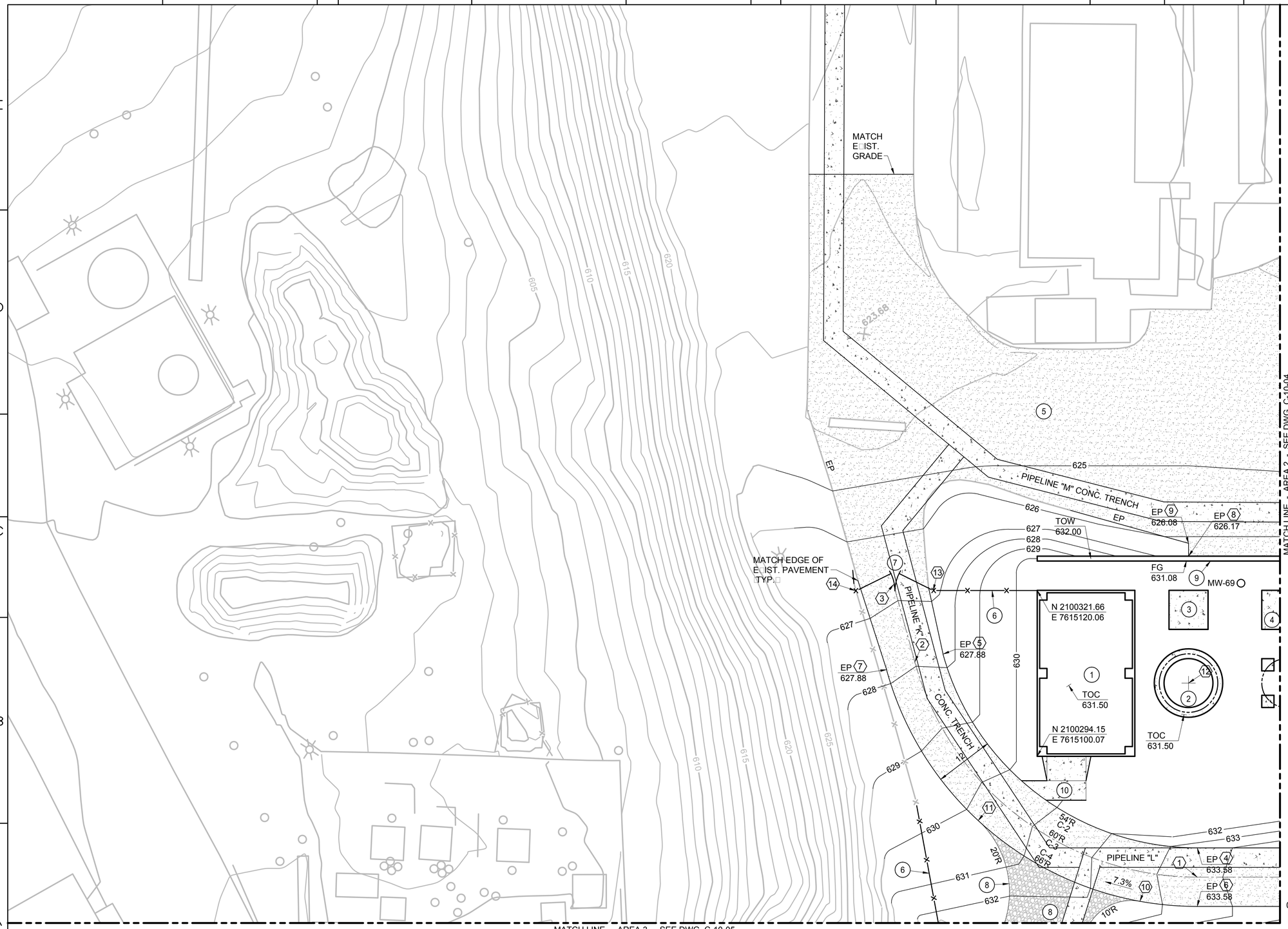

KEY NOTES:

1. OUTDOOR CHEMICAL STORAGE AND PROCESS AREA, SEE DWG. S-13-11.
2. REMEDY FRESHWATER STORAGE TANK, SEE DWG. S-02-03.
3. BOOSTER PUMPS, SEE DWG. S-13-14.
4. CONCRETE PAD FOR TREATED WATER, BACKWASH AND RECYCLE PUMPS, SEE DWG. S-13-14.
5. A.C. PAVEMENT, SEE DET. 1, DWG. C-00-05.
6. 8' CHAIN LINK FENCE, SEE DWG. C-00-06.
7. 16' VEHICLE GATE, SEE DWG. C-00-06.
8. GRAVEL □6" AGG. BASE□ACCESS ROAD
9. RETAINING WALL, SEE DWG. S-13-14.
10. 4'-0" WIDE CONCRETE WALKWAY, SEE DET. 8, DWG. S-00-02.

CONTROL POINT TABLE				
⬡	NORTHING	EASTING	ELEV	DESC
1	2100254.86	7615112.05	□	CL, BC
2	2100324.53	7615091.16	□	CL, EC
3	2100339.92	7615096.95	□	CL END
4	2100259.71	7615115.57	633.58	EP, BC
5	2100322.41	7615096.77	627.88	EP, EC
6	2100250.01	7615108.52	633.58	EP, BC
7	2100326.64	7615085.54	627.88	EP, EC
8	2100309.10	7615149.25	626.17	EP
9	2100311.22	7615150.80	626.08	EP COR
10	2100257.76	7615099.64	□	BC
11	2100290.61	7615082.56	□	BC
12	2100288.06	7615133.97	□	CL TANK
13	2100338.11	7615105.08	□	FEN COR
14	2100347.52	7615092.14	□	FEN COR

CURVE DATA TABLE				
C-□	R	D	T	L
2	54.00'	D	T	L
3	60.00'	D	T	L
4	66.00'	D	T	L

LEGEND

- 628 — EXISTING CONTOUR
- 628 — NEW CONTOUR
- NEW A.C. PAVING
- NEW CONCRETE
- NEW GRAVEL ROAD

- FINAL DESIGN - FOR AGENCY APPROVAL ONLY

REGISTERED PROFESSIONAL ENGINEER BENJAMIN J. WUERL C 67811 Exp 6/30/17 CIVIL STATE OF CALIFORNIA

ETIC ENGINEERING

ARCADIS

NO.	DATE	DESCRIPTION	GM/SPEC	DWN	CHKD	SUPV	APVD	BY
1	11/18/15	FINAL DESIGN		AJW	WLM	BW	RAO	
0	9/8/14	PRE-FINAL 90% DESIGN		WTH	VMB	VMB	VMB	

REVISIONS

APPROVED BY	
RAO	SO
	SUPV
	DSGN
	DWN
	CHKD
	OK
	DATE
	SCALES

TOPOCK GROUNDWATER REMEDIATION PROJECT

TCS AREA 1
FINISH GRADING AND PAVING PLAN

GAS TRANSMISSION & DISTRIBUTION
PACIFIC GAS AND ELECTRIC COMPANY
SAN FRANCISCO, CALIFORNIA

MICROFILM	
BILL OF MATL	
DWG LIST	
SUPSDS	
SUPSD BY	
SHEET NO.	of SHEETS
C-10-03	REV 1

N1808

11/03/2015, 10:49, G:\Graphics\ART\TOPOCK-01\Submittal_100%\DWG\C-C\ IIIC-10-03.dwg, Tab: C-10-03

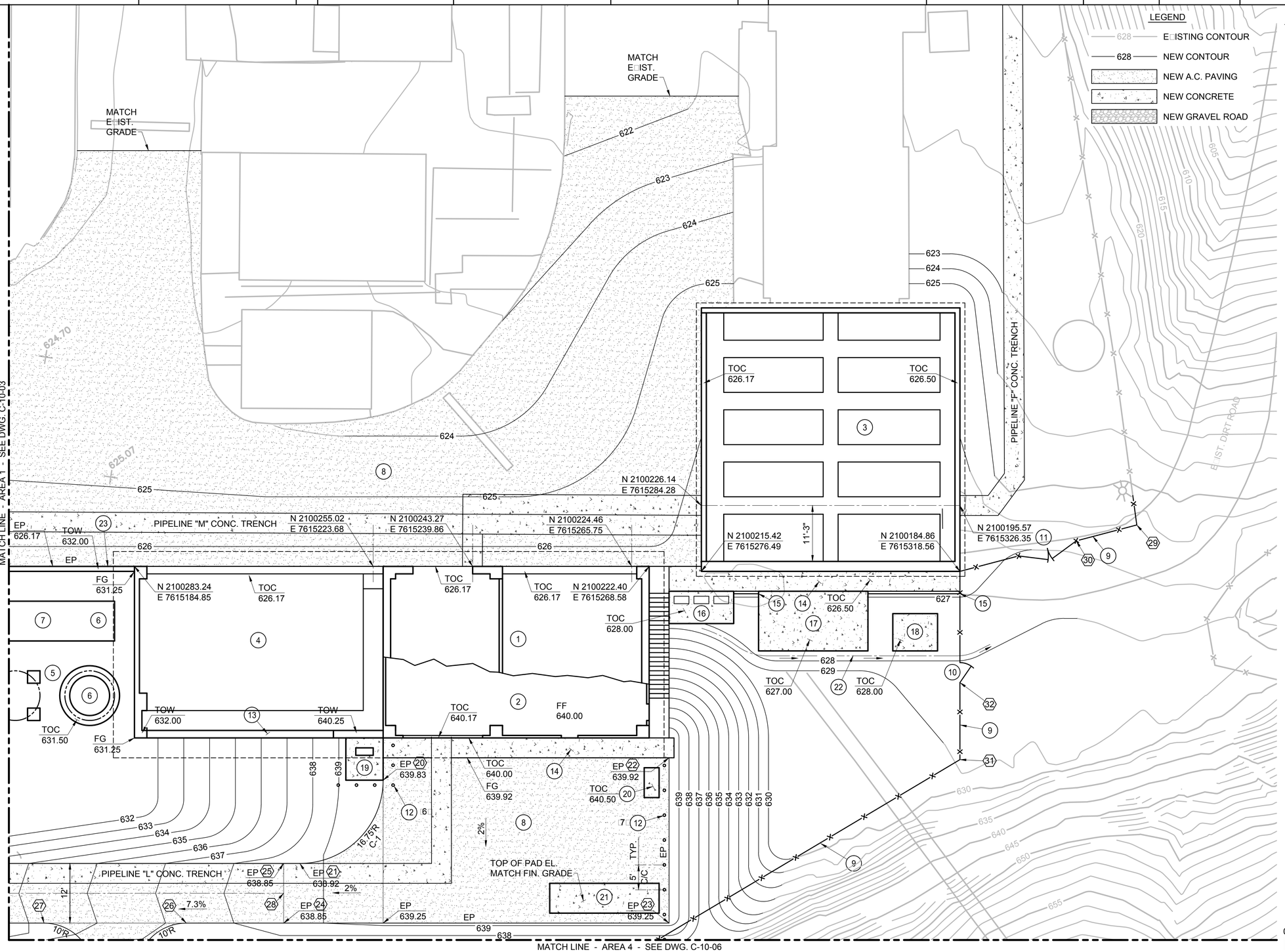

LEGEND

- 628 — EXISTING CONTOUR
- 628 — NEW CONTOUR
- NEW A.C. PAVING
- NEW CONCRETE
- NEW GRAVEL ROAD

KEY NOTES:

1. REMEDY PRODUCED WATER CONDITIONING PLANT FIRST FLOOR, SEE DWG. S-12-02.
2. REMEDY PRODUCED WATER CONDITIONING PLANT SECOND FLOOR, SEE DWG. S-12-03.
3. INFLUENT TANK FARM, SEE DWG. S-11-02.
4. DECON PAD AND FUTURE FRESH WATER PRE-INJECTION TREATMENT SYSTEM BUILDING, SEE DWG. S-12-02.
5. BACKWASH TANKS, SEE DWG. S-13-14.
6. TREATED WATER PUMPS AND TANK
7. BACKWASH PUMPS
8. A.C. PAVEMENT, SEE DET. 1, DWG. C-00-05.
9. 8' CHAIN LINK FENCE, SEE DWG. C-00-06.
10. 4' MAN GATE, SEE DWG. C-07-06.
11. 12' VEHICLE GATE, SEE DWG. C-00-06.
12. FIXED GUARD POST, SEE DET. 2, DWG. C-00-07.
13. RETAINING WALL, SEE DWG. S-12-10.
14. 4' WIDE CONC. WALKWAY, SEE DET. 8, DWG. S-00-02.
15. 6" HIGH CONC. CURB, SEE DET. 2, DWG. C-00-05.
16. COMPRESSOR PAD, SEE DWG. S-12-21.
17. SWITCH GEAR PAD AND CANOPY, SEE DWG. S-12-22.
18. TRANSFORMER PAD, SEE DWG. S-12-21.
19. HEAT PUMP PAD, SEE DWG. S-12-21.
20. GENERATOR CONNECTION PANEL, SEE DWG. S-12-21.
21. GENERATOR PAD, SEE DWG. S-12-21.
22. 2' WIDE CONC. SWALE, DRAIN TO EAST.
23. RETAINING WALL, SEE DWG. S-13-14.

CONTROL POINT TABLE				
⬡	NORTHING	EASTING	ELEV	DESC
20	2100219.06	7615200.03	639.83	EP, BC
21	2100215.35	7615176.63	638.92	EP, EC
22	2100188.90	7615249.19	639.92	EP COR
23	2100162.00	7615229.64	639.25	EP COR
24	2100207.56	7615166.95	638.85	EP, GB
25	2100217.26	7615174.00	638.85	EP, GB
26	2100219.06	7615151.11	□	BC
27	2100235.89	7615127.95	□	BC
28	2100212.41	7615170.47	638.85	CL ROAD
29	2100171.49	7615352.81	□	FEN COR
30	2100176.07	7615341.09	□	GATE
31	2100154.23	7615296.30	□	FEN COR
32	2100166.76	7615305.41	□	GATE

CURVE DATA TABLE				
C-□	R	D	T	L
1	16.75'	90.00°	T	L

- FINAL DESIGN - FOR AGENCY APPROVAL ONLY -

0 10 20 30

SCALE: 1" = 10'

REGISTERED PROFESSIONAL ENGINEER BENJAMIN J. WUERL C 67811 EXP 6/30/17 CIVIL STATE OF CALIFORNIA

ETIC ENGINEERING

ARCADIS

NO.	DATE	DESCRIPTION	GM/SPEC	DWN	CHKD	SUPV	APVD BY
1	11/18/15	FINAL DESIGN		AJW	WLM	BW	RAO
0	9/8/14	PRE-FINAL 90% DESIGN		WTH	VMB	VMB	VMB

REVISIONS

APPROVED BY	
RAO	SO
	SUPV
	DSGN
	DWN
	CHKD
	OK
	DATE
	SCALES

TOPOCK GROUNDWATER REMEDIATION PROJECT

TCS AREA 2
FINISH GRADING AND PAVING PLAN

GAS TRANSMISSION & DISTRIBUTION
PACIFIC GAS AND ELECTRIC COMPANY
SAN FRANCISCO, CALIFORNIA

MICROFILM	
BILL OF MATL	
DWG LIST	
SUPSDS	
SUPSD BY	
SHEET NO.	of SHEETS
C-10-04	REV 1

N1808

11/03/2015, 10:51, G:\Graphics\ART\TOPOCK-011\Submittal_100%\DWGs\C-C\ IIIC-10-04.dwg, Tab: C-10-04

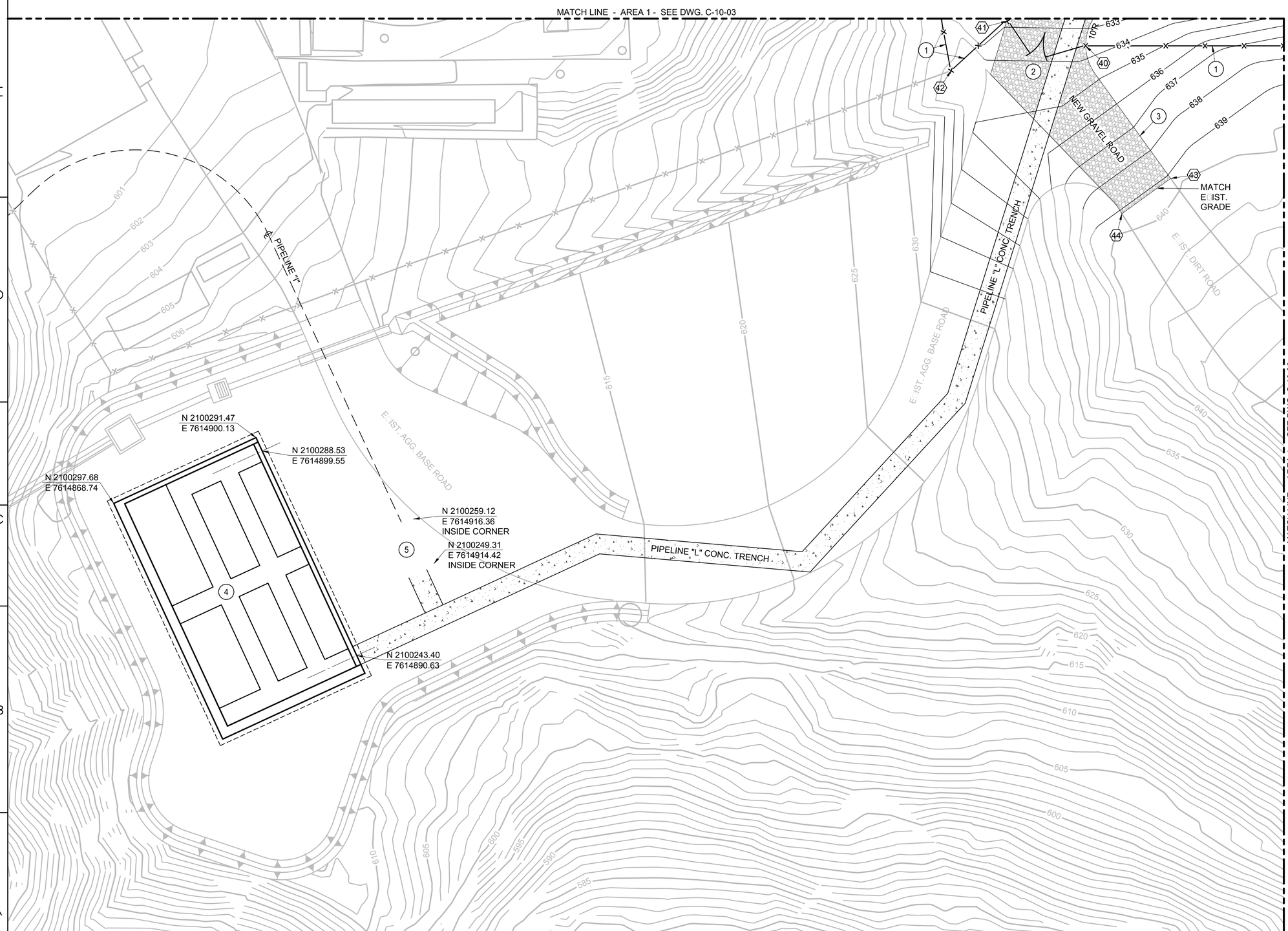

KEY NOTES:

1. 8' CHAIN LINK FENCE, SEE DWG. C-00-06.
2. 16' VEHICLE GATE, SEE DWG. C-00-06.
3. GRAVEL 6" AGG. BASE ACCESS ROAD
4. CONDITIONED WATER TANK FARM, SEE DWG. S-14-10.
5. FW-2 METER AND VALVE VAULT, SEE DWG. S-02-01.

CONTROL POINT TABLE

	NORTHING	EASTING	ELEV	DESC
40	2100257.03	7615083.89		GATE
41	2100269.87	7615074.34		GATE
42	2100268.63	7615059.00		FEN COR
43	2100224.48	7615082.35		FG
44	2100224.51	7615070.08		FG

CURVE DATA TABLE

C-	R	D	T	L
	20.00'	D	T	L

LEGEND

- 628 EXISTING CONTOUR
- 628 NEW CONTOUR
- NEW A.C. PAVING
- NEW CONCRETE
- NEW GRAVEL ROAD

- FINAL DESIGN - FOR AGENCY APPROVAL ONLY

0 10 20 30
SCALE: 1" = 10'

REGISTERED PROFESSIONAL ENGINEER BENJAMIN J. WUERL C 67811 EXP. 6/30/17 STATE OF CALIFORNIA

ETIC ENGINEERING

ARCADIS

NO.	DATE	DESCRIPTION	GM/SPEC	DWN	CHKD	SUPV	APVD BY
1	11/18/15	FINAL DESIGN		AJW	WLM	BW	RAO
0	9/8/14	PRE-FINAL 90% DESIGN		WTH	VMB	VMB	VMB

REVISIONS

APPROVED BY: RAO

SO / SUPV / DSGN / DWN / CHKD / OK / DATE / SCALES

TOPOCK GROUNDWATER REMEDIATION PROJECT

TCS AREA 3
FINISH GRADING AND PAVING PLAN

GAS TRANSMISSION & DISTRIBUTION
PACIFIC GAS AND ELECTRIC COMPANY
SAN FRANCISCO, CALIFORNIA

MICROFILM / BILL OF MATL / DWG LIST / SUPSDS / SUPSD BY / SHEET NO. of SHEETS

C-10-05 REV 1

11/03/2015, 10:53, G:\Graphics\AR\TOPOCK-01\Submittal_100%\DWGs\C-Ci\C-10-05.dwg, Tab: C-10-05

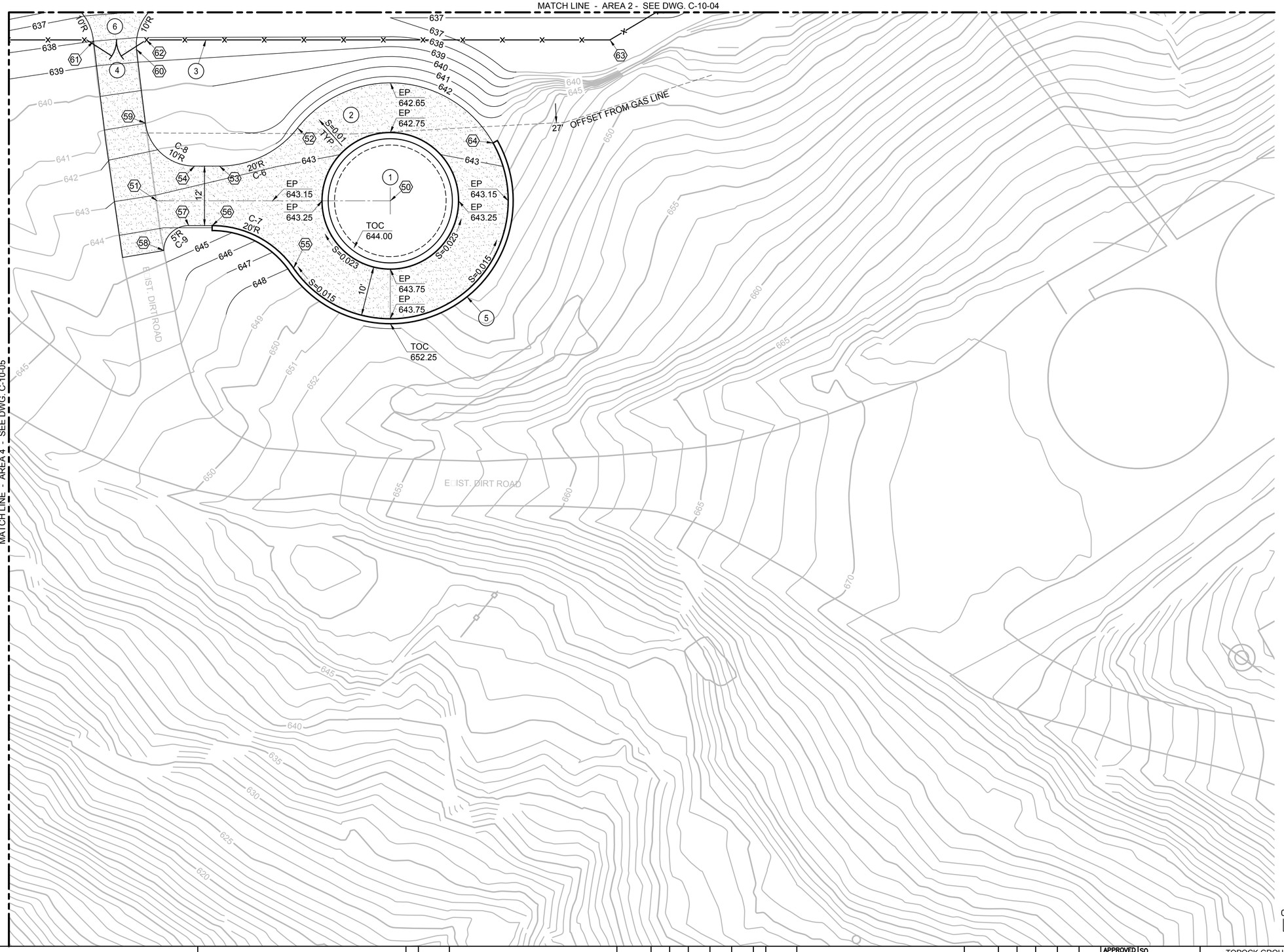

KEY NOTES:

1. CONDITIONED WATER STORAGE TANK, SEE DWG. S-14-01.
2. 12' WIDE TANK ACCESS ROAD, SEE DWG. S-14-08.
3. 8' CHAIN LINK FENCE, SEE DWG. C-00-06.
4. 10' VEHICLE GATE, SEE DWG. C-00-06.
5. RETAINING WALL, SEE DWG. S-14-08.
6. A.C. PAVEMENT, SEE DET. 1, DWG. C-00-05.

CONTROL POINT TABLE

⬡	NORTHING	EASTING	ELEV	DESC
50	2100161.39	7615160.09	□	CL TANK
51	2100189.12	7615121.92	□	CL ROAD
52	2100184.23	7615153.59	□	BC
53	2100187.29	7615136.36	□	EC
54	2100190.23	7615132.30	□	BC
55	2100161.87	7615136.35	□	BC
56	2100178.45	7615128.11	□	EC
57	2100181.23	7615124.28	□	BC
58	2100180.12	7615117.29	□	EC
59	2100203.06	7615129.37	□	EC
60	2100216.12	7615136.65	□	EC
61	2100222.55	7615130.59	□	EC
62	2100216.51	7615139.37	□	GATE
63	2100161.60	7615139.37	□	FEN COR
64	2100158.66	7615183.69	□	WALL

CURVE DATA TABLE

C-□	R	D	T	L
6	20.00'	D	T	L
7	20.00'	D	T	L
8	10.00'	D	T	L
9	5.00'	D	T	L

LEGEND

- 628 EXISTING CONTOUR
- 628 NEW CONTOUR
- NEW A.C. PAVING
- NEW CONCRETE
- NEW GRAVEL ROAD

- FINAL DESIGN - FOR AGENCY APPROVAL ONLY

0 10 20 30
SCALE: 1" = 10'

REGISTERED PROFESSIONAL ENGINEER BENJAMIN J. WUERL C 67811 EXP 6/30/17 STATE OF CALIFORNIA

ETIC ENGINEERING

ARCADIS

NO.	DATE	DESCRIPTION	GM/SPEC	DWN	CHKD	SUPV	APVD BY
1	11/18/15	FINAL DESIGN	AJW	WLM	BW	RAO	
0	9/8/14	PRE-FINAL (90%) DESIGN	WTH	VMB	VMB	VMB	

REVISIONS

APPROVED BY	
RAO	SO
	SUPV
	DSGN
	DWN
	CHKD
	OK
	DATE
	SCALES

TOPOCK GROUNDWATER REMEDIATION PROJECT

TCS AREA 4
FINISH GRADING AND PAVING PLAN

GAS TRANSMISSION & DISTRIBUTION
PACIFIC GAS AND ELECTRIC COMPANY
SAN FRANCISCO, CALIFORNIA

MICROFILM	
BILL OF MATL	
DWG LIST	
SUPSDS	
SUPSD BY	
SHEET NO.	of SHEETS
C-10-06	REV 1

N1808

11/03/2015, 10:55, G:\Graphics\ART\TOPOCK-01\Submittal_100%\DWGs\C-C\ IIIC-10-06.dwg, Tab: C-10-06

MATCH LINE FOR CONTINUATION SEE SHEET C-10-12

2" SL
4" FO
4" TCS BW
4" TCS INJ
6" IRL-6" SP
2" TW
4" 480V
2 X 2" TW (CONNECTING TO EXISTING BLOWDOWN)

2" TW
4" 480V
4" FO
4" RW
6" DR
4" FW
2" WS
2" TW

MATCHLINE FOR CONTINUATION SEE SHEET C-07-78A

REMEDY FRESH WATER STORAGE TANK

4" TCS BW
4" TCS INJ
2" SL
2" WS
2" TW

6" FPW
4" FW
2 x 1 1/4" TXS, TWR
2" IA
2" RW
2" SL
2" RW
2" ACD
2" COG
2" CAU
2" UA

2" POT WTR
4" SP
6" SP
6" SP
2" TW
4" TCS INJ
6" TCS BW
6" FPW
4" FO

INFLUENT TANK FARM

2" FW
2" TW
2" WS
2" IA
2" UA
2" FW
2" WS
480V H.H.
FO H.H.
4" RW
3" FW
2" WS
2" TW
2" TW
2" CAU
2" ACD
4" FO
4" 480V
4" 120V
4" FO
2" TW
6" DR
2" WS
FO HH
480V H.H.
CONDITIONED WATER STORAGE TANK FARM
TRANSFORMER 99
6" HDPE (SPARE)
12" KV BURIED CABLE
12" SPARE
12" FW
6" FW
2" TW
2" TW
2" CAU
2" ACD
6" FW
4" FO
4" 480V
2" IA
2" UA
REMEDY-PRODUCED WATER CONDITIONING PLANT
CONDITIONED WATER STORAGE TANK
120V HH
FO HH
EXISTING STORAGE TANKS
MATCH LINE FOR CONTINUATION SEE SHEET C-07-26

0 20 40 60
SCALE: 1"=20'

- FINAL DESIGN - FOR AGENCY APPROVAL ONLY

REGISTERED PROFESSIONAL ENGINEER
BENJAMIN J. WUBL
C 67811
EXP 6/30/17
CIVIL
STATE OF CALIFORNIA

ETIC ENGINEERING
ARCADIS

NO.	DATE	DESCRIPTION	GM/SPEC	DWN	CHKD	SUPV	APVD BY
3	11/18/15	FINAL DESIGN		AJW	WLM	BW	RAO
2	8/5/15	90% RTC RESOLUTION		AJW	KLD	WLM	BJW
1	9/8/14	PRE-FINAL (90%) DESIGN					
0	4/5/13	INTERMEDIATE (60%) DESIGN		-	-	-	-

REVISIONS

APPROVED BY	
RAO	SO
	SUPV
	DSGN
	DWN
	CHKD
	OK
	DATE
	SCALES

TOPOCK GROUNDWATER REMEDIATION PROJECT

PIPE LAYOUT SHEET 1 OF 4

GAS TRANSMISSION & DISTRIBUTION
PACIFIC GAS AND ELECTRIC COMPANY
SAN FRANCISCO, CALIFORNIA

MICROFILM	
BILL OF MATL	
DWG LIST	
SUPSDS	
SUPSD BY	
SHEET NO. of	SHEETS
C-10-11	REV 3

N1808

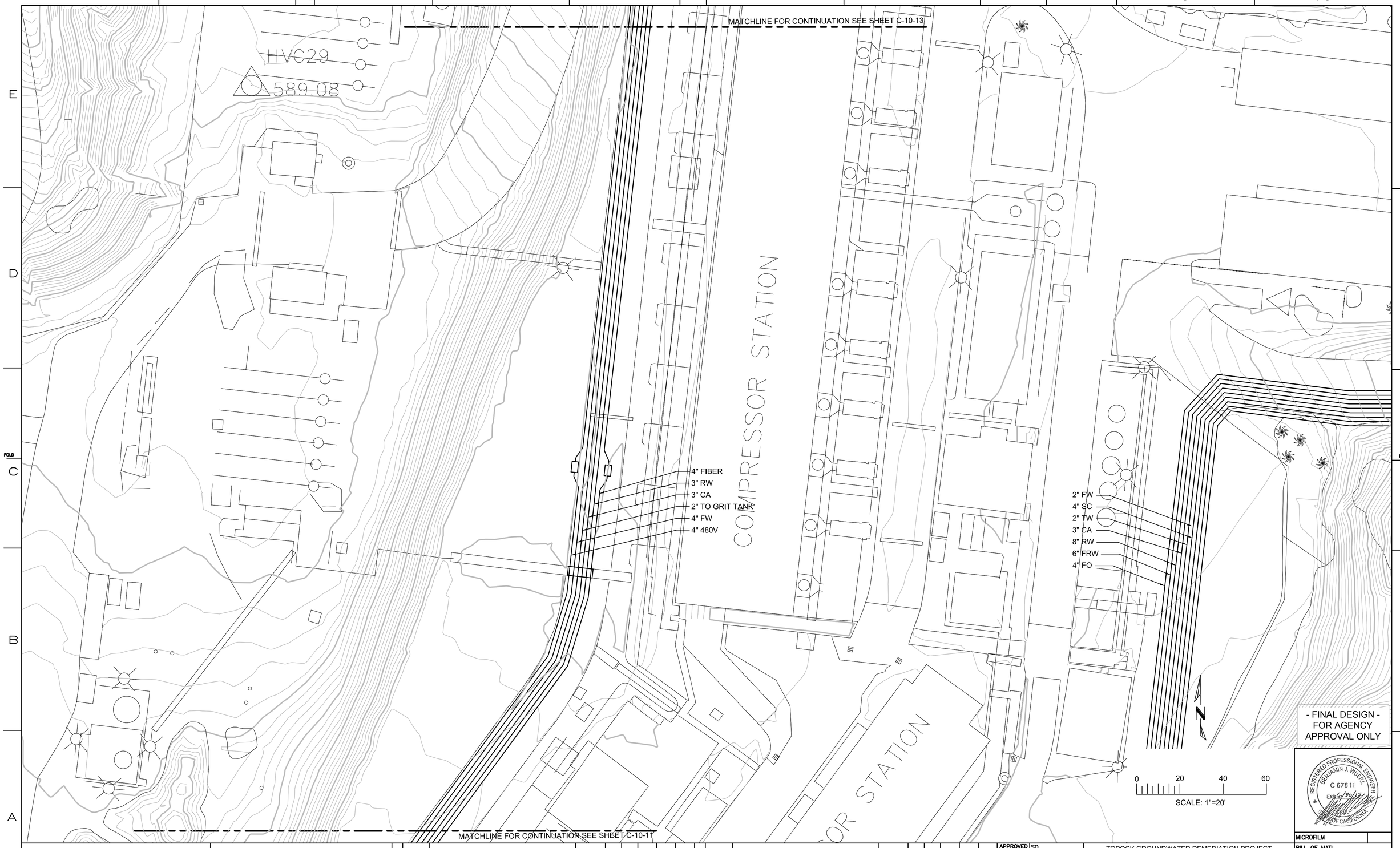

- FINAL DESIGN -
FOR AGENCY
APPROVAL ONLY

REGISTERED PROFESSIONAL ENGINEER
BENJAMIN J. WUERL
C 67811
EXP. 6/30/17
STATE OF CALIFORNIA

ETIC ENGINEERING

ARCADIS

NO.	DATE	DESCRIPTION	GM/SPEC	DWN	CHKD	SUPV	APVD	BY
2	11/18/15	FINAL DESIGN		AJW	WLM	BW	RAO	
1	9/8/14	PRE-FINAL (90%) DESIGN						
0	4/5/13	INTERMEDIATE (60%) DESIGN						

REVISIONS

APPROVED BY: RAO

SO
SUPV
DSGN
DWN
CHKD
OK
DATE
SCALES

TOPOCK GROUNDWATER REMEDIATION PROJECT

PIPE LAYOUT
SHEET 2 OF 4

GAS TRANSMISSION & DISTRIBUTION
PACIFIC GAS AND ELECTRIC COMPANY
SAN FRANCISCO, CALIFORNIA

MICROFILM
BILL OF MATL
DWG LIST
SUPSDS
SUPSD BY
SHEET NO. of SHEETS
C-10-12
REV 2

N1808



- FINAL DESIGN - FOR AGENCY APPROVAL ONLY

REGISTERED PROFESSIONAL ENGINEER
BENJAMIN J. WUERL
C 67811
EXP 6/30/17
CIVIL
STATE OF CALIFORNIA

ETIC ENGINEERING

ARCADIS

NO.	DATE	DESCRIPTION	GM/SPEC	DWN	CHKD	SUPV	APVD BY
2	11/18/15	FINAL DESIGN		AJW	WLM	BW	RAO
1	9/8/14	PRE-FINAL 90% DESIGN		-	-	-	-
0	4/5/13	INTERMEDIATE 60% DESIGN		-	-	-	-

REVISIONS

APPROVED BY	
RAO	SO
	SUPV
	DSGN
	DWN
	CHKD
	OK
	DATE
	SCALES

TOPOCK GROUNDWATER REMEDIATION PROJECT

PIPE LAYOUT SHEET 3 OF 4

GAS TRANSMISSION & DISTRIBUTION
PACIFIC GAS AND ELECTRIC COMPANY
SAN FRANCISCO, CALIFORNIA

MICROFILM	
BILL OF MATL	
DWG LIST	
SUPSDS	
SUPSD BY	
SHEET NO.	of SHEETS
C-10-13	REV 2

N1808

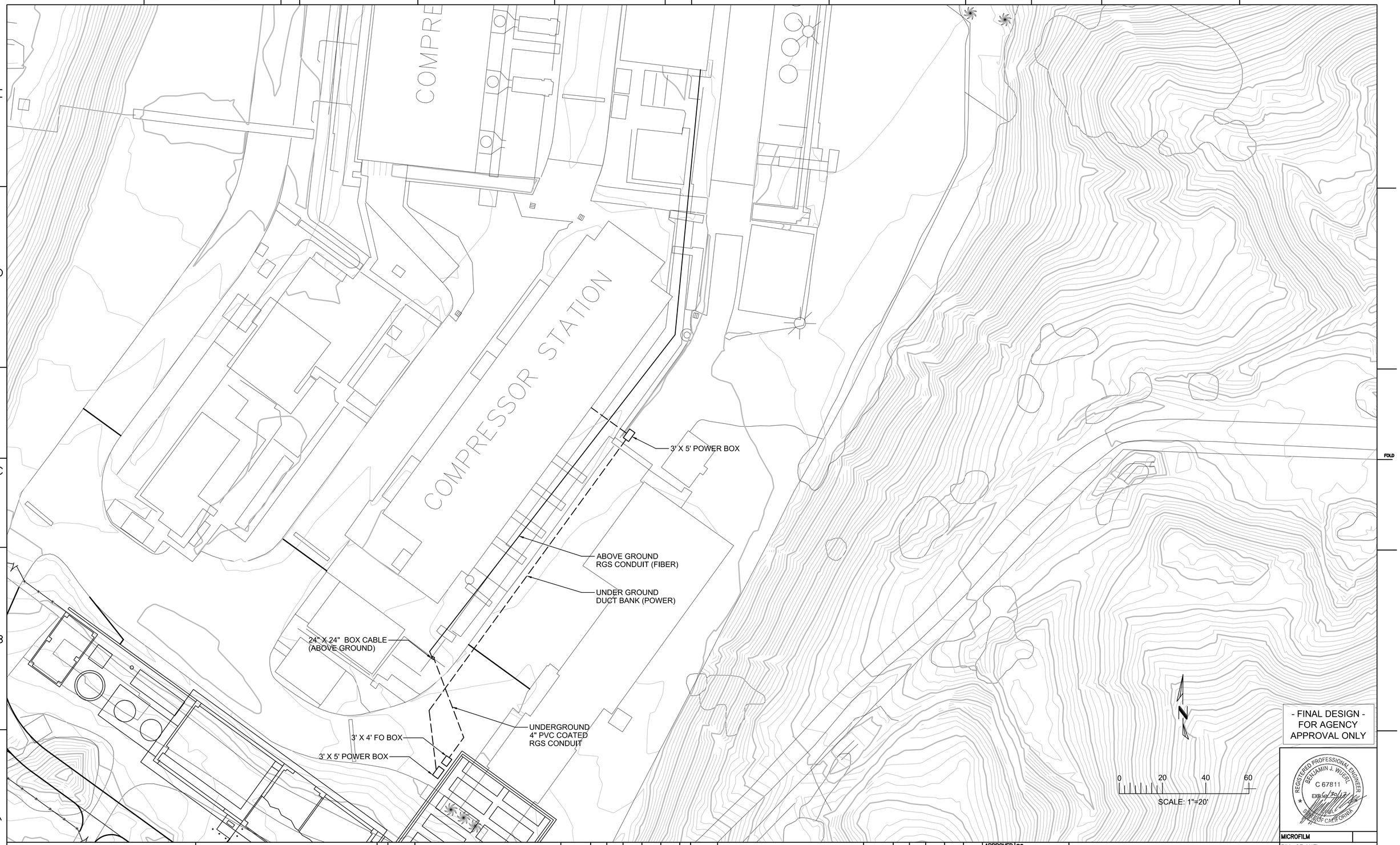

- FINAL DESIGN -
FOR AGENCY
APPROVAL ONLY

REGISTERED PROFESSIONAL ENGINEER
BENJAMIN J. WUERL
C 67811
EXP. 6/30/17
STATE OF CALIFORNIA

ETIC ENGINEERING

ARCADIS

NO.	DATE	DESCRIPTION	GM/SPEC	DWN	CHKD	SUPV	APVD BY
1	11/18/15	FINAL DESIGN		AJW	WLM	BW	RAO
0	9/8/14	PRE-FINAL 90% DESIGN		-	-	-	-

REVISIONS

APPROVED BY: RAO

SO
SUPV
DSGN
DWN
CHKD
OK
DATE
SCALES

TOPOCK GROUNDWATER REMEDIATION PROJECT

PIPE LAYOUT
SHEET 4 OF 4

GAS TRANSMISSION & DISTRIBUTION
PACIFIC GAS AND ELECTRIC COMPANY
SAN FRANCISCO, CALIFORNIA

MICROFILM
BILL OF MATL
DWG LIST
SUPSDS
SUPSD BY
SHEET NO. of SHEETS
C-10-14
REV 1

N1808

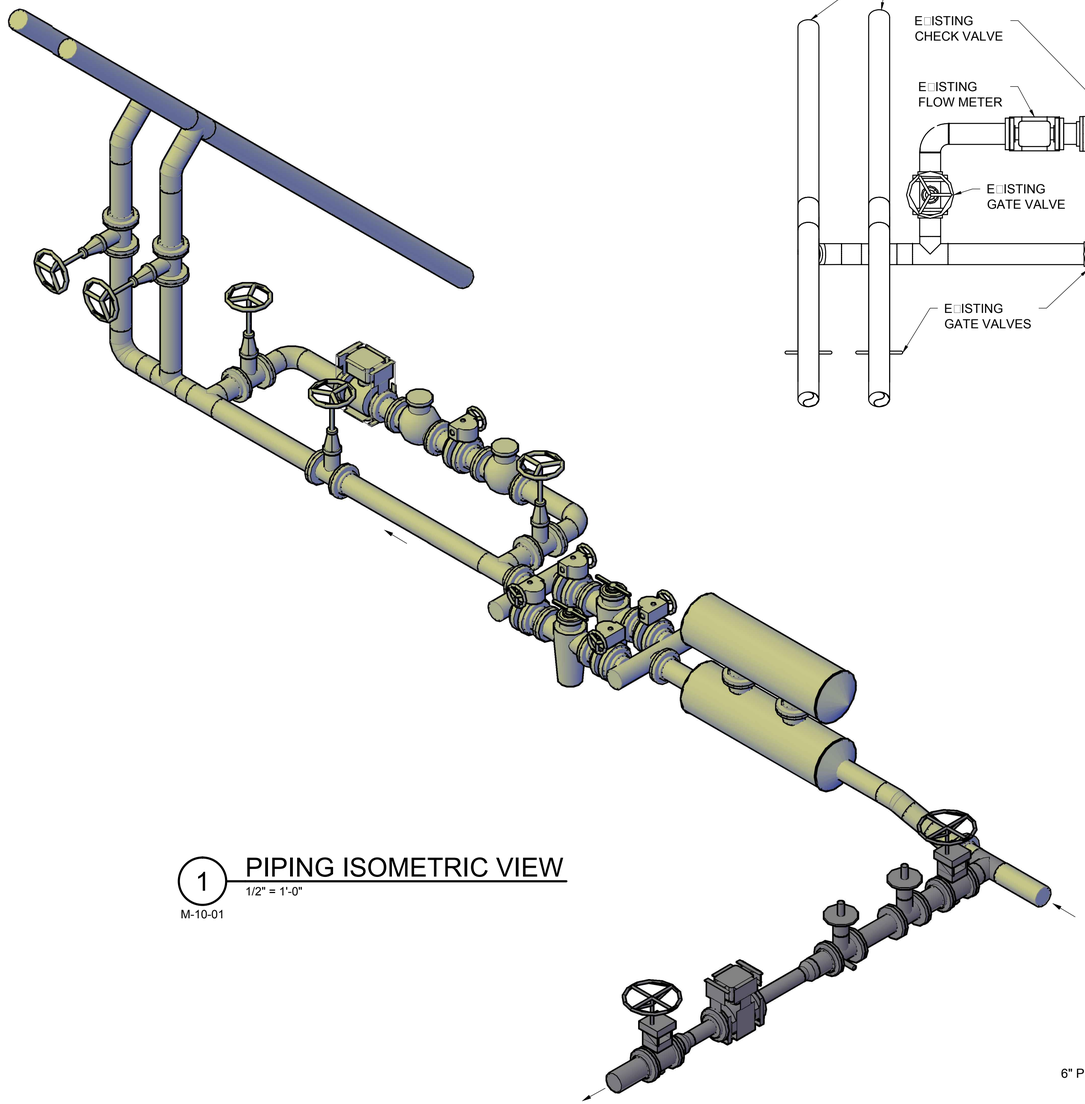

1 PIPING ISOMETRIC VIEW
1/2" = 1'-0"
M-10-01

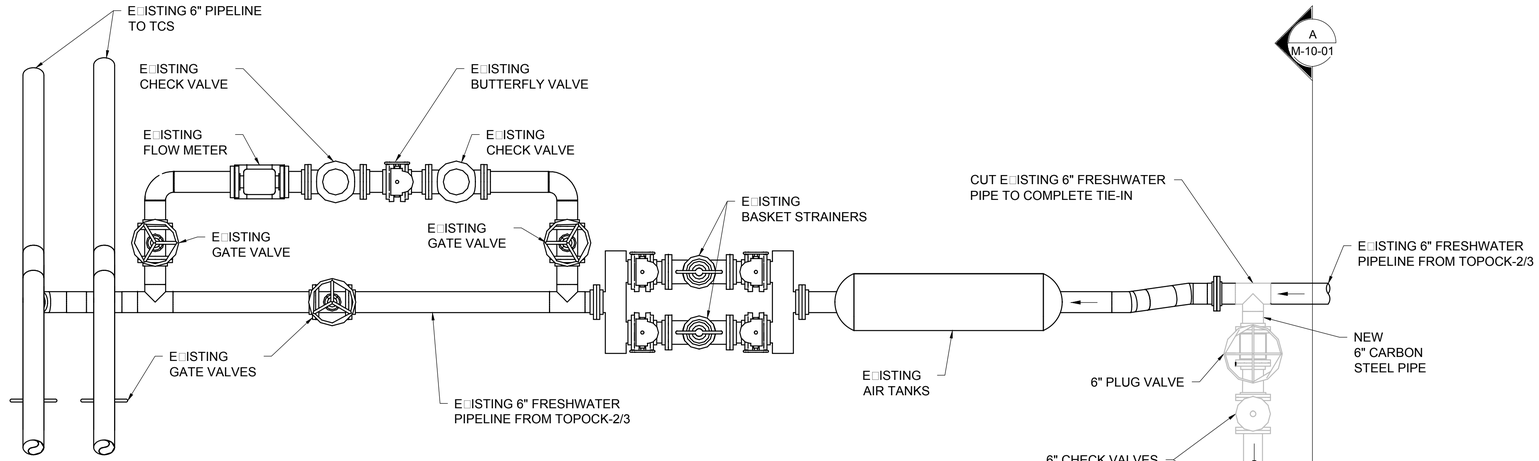

2 TCS FRESH WATER PIPING TIE-IN PLAN
1/2" = 1'-0"
M-10-01

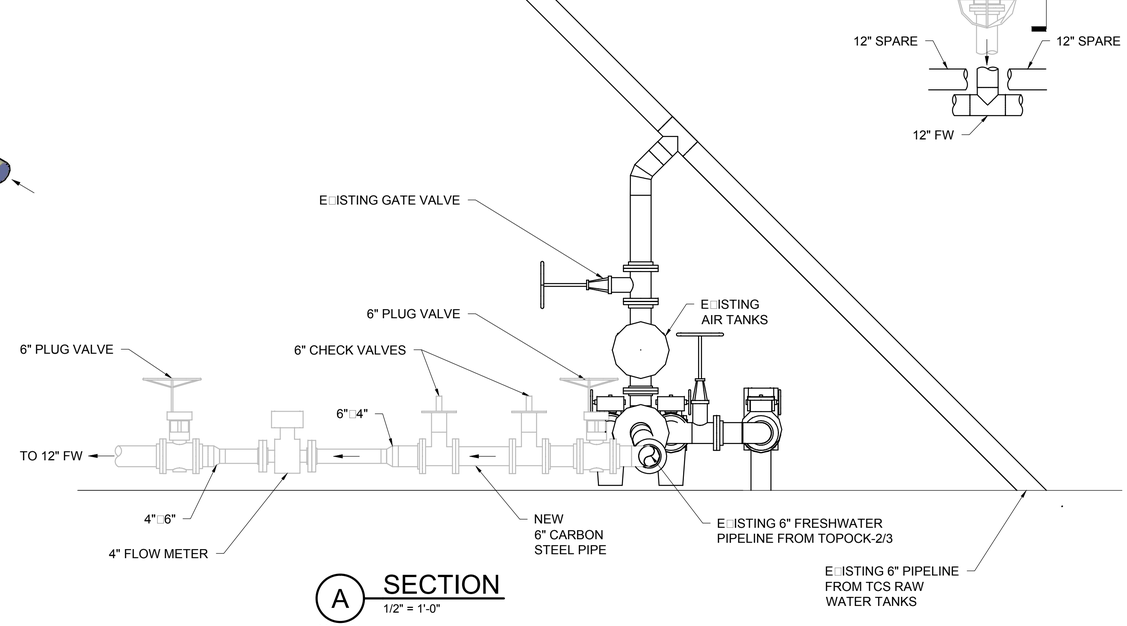

A SECTION
1/2" = 1'-0"
M-10-01

- FINAL DESIGN - FOR AGENCY APPROVAL ONLY

REGISTERED PROFESSIONAL ENGINEER BENJAMIN J. WUERL C 67811 Exp 6/30/17 STATE OF CALIFORNIA

ETIC ENGINEERING

ARCADIS

NO.	DATE	DESCRIPTION	GM/SPEC	DWN	CHKD	SUPV	APVD BY
0	11/18/15	FINAL DESIGN		AJW	KLD	BW	RAO

REVISIONS

APPROVED BY	
RAO	SO
	SUPV
	DSGN
	DWN
	CHKD
	OK
	DATE
	SCALES

TOPOCK GROUNDWATER REMEDIATION PROJECT

TOPOCK 2 AND 3 CONNECTION MECHANICAL DETAILS

GAS TRANSMISSION & DISTRIBUTION
PACIFIC GAS AND ELECTRIC COMPANY
SAN FRANCISCO, CALIFORNIA

MICROFILM	
BILL OF MATL	
DWG LIST	
SUPSDS	
SUPSD BY	
SHEET NO.	of SHEETS
M-10-01	REV 0

11/02/2015, 11:08, G:\Graphics\ARTOPOCK-01\Submittal_100%\DWGs\M-Mechanical\M-10-01.dwg, Tab: M-10-01

N180B

MATCH LINE FOR CONTINUATION SEE SHEET E-00-03

MATCH LINE FOR CONTINUATION SEE SHEET E-00-03

MATCH LINE FOR CONTINUATION SEE SHEET E-00-03

MATCH LINE FOR CONTINUATION SEE SHEET E-10-02

MATCH LINE FOR CONTINUATION SEE SHEET E-10-03

PBX-D1F
STAINLESS STEEL SURFACE MOUNT PULLBOX 24"X24"X10". TRANSITION UNDERGROUND CONDUIT TO ABOVE GRADE AT PULLBOX

F99A X020 (17) (2)

(2) C001 P001D P001G P001A P001E P001H P001B P001F X020 P001C

PBX-D1E
UNDERGROUND PULLBOXES PROVIDED AND INSTALLED PER CIVIL DRAWINGS (TYP)
SIZE S534

PBX-P1C
SIZE S534

INFLUENT TANK FARM
SEE DWG E-11-01 & E-11-02

F00C

C001 P001D P001G P001A P001E P001H P001B P001F X020 P001C

30A HVAC DISCONNECT (TYP OF 3)

F99A X020

REMEDY 480V SWITCHGEAR, SEE DWG E-00-10

MEDIUM VOLTAGE REMOTE POWER MAIN BREAKER. SEE DWG E-00-10

P002A P002E P002B P002F P002C P002G P002D P002H

UFFER GROUND (14)

C099 T099A

T99C

(3) (4)

DIRECT BURY 12KV CABLE. SEE C-10-11 THROUGH C-10-14.

REMEDY BUILDING
SEE DWG E-12-20, E-12-21, E-12-22 & E-12-23

LB001 LB005 LB009

C001 P008B P040B P008A P040A X020

P001A P001C P001E P001G P001B P001D P001F P001H

(4) (6) (8) (10) (12) (3) (5) (7) (9) (13) L027

(1)

(14)

X020 X020 D010 X020 X020

XFMR-99
STEP-UP TRANSFORMER INSTALL PER DWG E-00-51/DET 1

DECON PAD

NEMA 3R AREA

D011 T99B

(16)

PBX-T1A
UNDERGROUND PULL BOX MEDIUM VOLTAGE POWER INSTALL PER DWG E-00-52/DET 2
SIZE 3X5 (TYP)

PBX-D1B
SIZE S534

PBX-P1B
SIZE S534

(11)

(3) (5) P008A P008B

GENERATOR CONNECTION PANEL. INSTALL PER DWG E-00-51/DET 4

(4) (6)

(12) (13)

(9) (10)

(7) (8)

PBX-P1A
UNDERGROUND ELECTRICAL VAULT
LOW VOLTAGE POWER & CONTROL
INSTALL PER DWG E-00-52/DET 7
SIZE S666 (TYP)

PBX-D1A
UNDERGROUND ELECTRICAL VAULT
COMMUNICATION
INSTALL PER DWG E-00-52/DET 7
SIZE S666 (TYP)

COORDINATE CONDUIT ROUTE AND PULLBOX LOCATIONS WITH CIVIL DRAWINGS C-10-11.

PORTABLE GENERATOR PAD

0 10 20 30
SCALE: 1"=10'

TCS AREA 2 REMEDY BUILDING POWER AND CONTROL PLAN (15)

ELECTRICAL PLAN NOTES:

1. SEE ELECTRICAL PLAN NOTES ON DRAWING E-00-02.

DRAWING REFERENCED NOTES:

(1) STUB AND CAP CONDUITS FOR FUTURE USE.

(2) CONDUIT ROUTING THRU TOPOCK COMPRESSOR STATION SHOWN ARE APPROXIMATE. COORDINATE CONDUIT ROUTE AND PULLBOX LOCATIONS WITH CIVIL DRAWING C-10-14.

(3) DUCTBANK INCLUDES THE FOLLOWING CONDUIT:
C010 C204 C255 LA035 P330A
C030 C210 C257 P201A P340A
C070 C220 C259 P202A X020
C080 C230 LA028 P203A X020
C201 C240 LA029 P204A X020
C202 C251 LA031 P310A X020
C203 C253 LA033 P320A X020

(4) DUCTBANK INCLUDES THE FOLLOWING CONDUIT:
A252 A258 A080B X020
A254 A070 X020
A256 A080A X020

(5) DUCTBANK INCLUDES THE FOLLOWING CONDUIT:
LB001 LB009 P040B X020
LB005 P040A X020 X020

(6) DUCTBANK INCLUDES THE FOLLOWING CONDUIT:
D010 F99B X020 X020
D011 X020 X020 X020

(7) DUCTBANK INCLUDES THE FOLLOWING CONDUIT:
C1400 L1400 LA037

(8) DUCTBANK INCLUDES THE FOLLOWING CONDUIT:
A1400 F08

(9) DUCTBANK INCLUDES THE FOLLOWING CONDUIT:
C410 P0201 X020
L410 P405A X020
P406A X020

(10) DUCTBANK INCLUDES THE FOLLOWING CONDUIT:
A410 F0201 X020

(11) DUCTBANK INCLUDES THE FOLLOWING CONDUIT:
LA027 P008A P008B

(12) DUCTBANK INCLUDES THE FOLLOWING CONDUIT:
C340A P340A X340A

(13) DUCTBANK INCLUDES THE FOLLOWING CONDUIT:
D340A

(14) UFER GROUND SHALL CONSIST OF #2 BARE COPPER CONDUCTOR CENTERED IN CONCRETE PAD (25 FEET MINIMUM). LOOP CONDUCTOR TO FIT WITHIN CONCRETE PAD. MAINTAIN 3" MINIMUM COVER OVER ALL PORTIONS OF CONDUCTOR.

(15) CONDUIT ROUTE AND PULLBOX LOCATIONS SHOWN ARE APPROXIMATE. COORDINATE CONDUIT ROUTE AND PULLBOX LOCATIONS WITH CIVIL PIPELINE ROUTING. SEE DRAWINGS C-10-11 THROUGH C-10-14.

(16) 12 KV DIRECT BURY CABLE TO BE INTERCEPTED IN UNDERGROUND PULLBOX. 12 KV DIRECT BURY CABLE TO BE INSTALLED IN CONDUIT FROM UNDERGROUND PULLBOX TO TRANSFORMER.

(17) SURFACE MOUNT CONDUIT FROM PULLBOX TO CONTROL ROOM ON EXISTING CONDUIT RACK. PROVIDE AND INSTALL NEW MOUNTING HARDWARE AS REQUIRED FOR NEW CONDUIT.

- FINAL DESIGN - FOR AGENCY APPROVAL ONLY

REGISTERED PROFESSIONAL ENGINEER JOHN M. SIOCH 20532 Exp. 9-30-17 ELECTRICAL STATE OF CALIFORNIA

FRISCH ENGINEERING, INC.
CONSULTING ELECTRICAL ENGINEERS
13405 FOLSOM BLVD, UNIT 600
FOLSOM, CA 95630
PH 916 353 1025
WWW.FRISCHENGINEERING.COM

ARCADIS

NO.	DATE	DESCRIPTION	GM/SPEC	DWN	CHKD	SUPV	APVD BY
1	11/18/15	FINAL DESIGN		MBY	TPF	JMS	RAO
0	9/8/14	PRE-FINAL (90%) DESIGN		MBY		TPF	

REVISIONS

APPROVED BY	
RAO	SO
	SUPV JMS
	DSGN MBY
	DWN MBY
	CHKD TPF
	OK JMS
	DATE
	SCALES N/A

TOPOCK GROUNDWATER REMEDIATION PROJECT
TCS AREA 2
ELECTRICAL SITE PLAN
GAS TRANSMISSION & DISTRIBUTION
PACIFIC GAS AND ELECTRIC COMPANY
SAN FRANCISCO, CALIFORNIA

MICROFILM	
BILL OF MATL	
DWG LIST	
SUPSDS	
SUPSD BY	
SHEET NO.	of SHEETS
E-10-01	REV 0

FILENAME: E-10-01.dwg
PLOT DATE: Oct 29, 2015 PLOT TIME: 3:57:25pm
N1808

MATCH LINE FOR CONTINUATION SEE SHEET E-00-03

C340A P340A D340A X340A

UNDERGROUND PULLBOXES PROVIDED AND INSTALLED PER CIVIL DRAWINGS

PBX-C0A

PBX-P0A

FUTURE FRESH WATER PRE-INJECTION TREATMENT SYSTEM

C340A P340A X010 D340A X340A X010

COORDINATE CONDUIT ROUTE AND PULLBOX LOCATIONS WITH AECOM DRAWINGS. SHEET C-07-81 THROUGH C-07-89

MATCH LINE FOR CONTINUATION SEE SHEET E-10-01

MATCH LINE FOR CONTINUATION SEE SHEET E-10-04

A400 P0201 X020
C400 P405A X020
L400 P406A X020
F0201 X020

0 10 20 30
SCALE: 1"=10'

TCS AREA 1 FWPI TREATMENT SYSTEM POWER AND CONTROL PLAN (1)

ELECTRICAL PLAN NOTES:

1. SEE ELECTRICAL PLAN NOTES ON DRAWING E-00-02.

DRAWING REFERENCED NOTES:

(1) CONDUIT ROUTE AND PULLBOX LOCATIONS SHOWN ARE APPROXIMATE. COORDINATE CONDUIT ROUTE AND PULLBOX LOCATIONS WITH CIVIL PIPELINE ROUTING. SEE DRAWINGS C-10-11 THROUGH C-10-13.

- FINAL DESIGN - FOR AGENCY APPROVAL ONLY

REGISTERED PROFESSIONAL ENGINEER JOHN M. SIDDOWAY 20532 Exp. 9-30-17 ELECTRICAL STATE OF CALIFORNIA

FRISCH ENGINEERING, INC.
CONSULTING ELECTRICAL ENGINEERS
13405 FOLSOM BLVD, UNIT 600
FOLSOM, CA 95630
PH 916 353 1025
WWW.FRISCHENGINEERING.COM

ARCADIS

NO.	DATE	DESCRIPTION	GM/SPEC	DWN	CHKD	SUPV	APVD BY
1	11/18/15	FINAL DESIGN		MBY	TPF	JMS	RAO
0	9/8/14	PRE-FINAL (90%) DESIGN		MBY			TPF

REVISIONS

APPROVED BY	
RAO	SO
	SUPV JMS
	DSGN MBY
	DWN MBY
	CHKD TPF
	OK JMS
	DATE
	SCALES N/A

TOPOCK GROUNDWATER REMEDIATION PROJECT
TCS AREA 1
ELECTRICAL SITE PLAN
GAS TRANSMISSION & DISTRIBUTION
PACIFIC GAS AND ELECTRIC COMPANY
SAN FRANCISCO, CALIFORNIA

MICROFILM	
BILL OF MATL	
DWG LIST	
SUPSDS	
SUPSD BY	
SHEET NO.	of SHEETS
E-10-02	REV 0

FILENAME: E-10-01.dwg PLOT DATE: Oct 29, 2015 PLOT TIME: 3:57:19pm

N1808

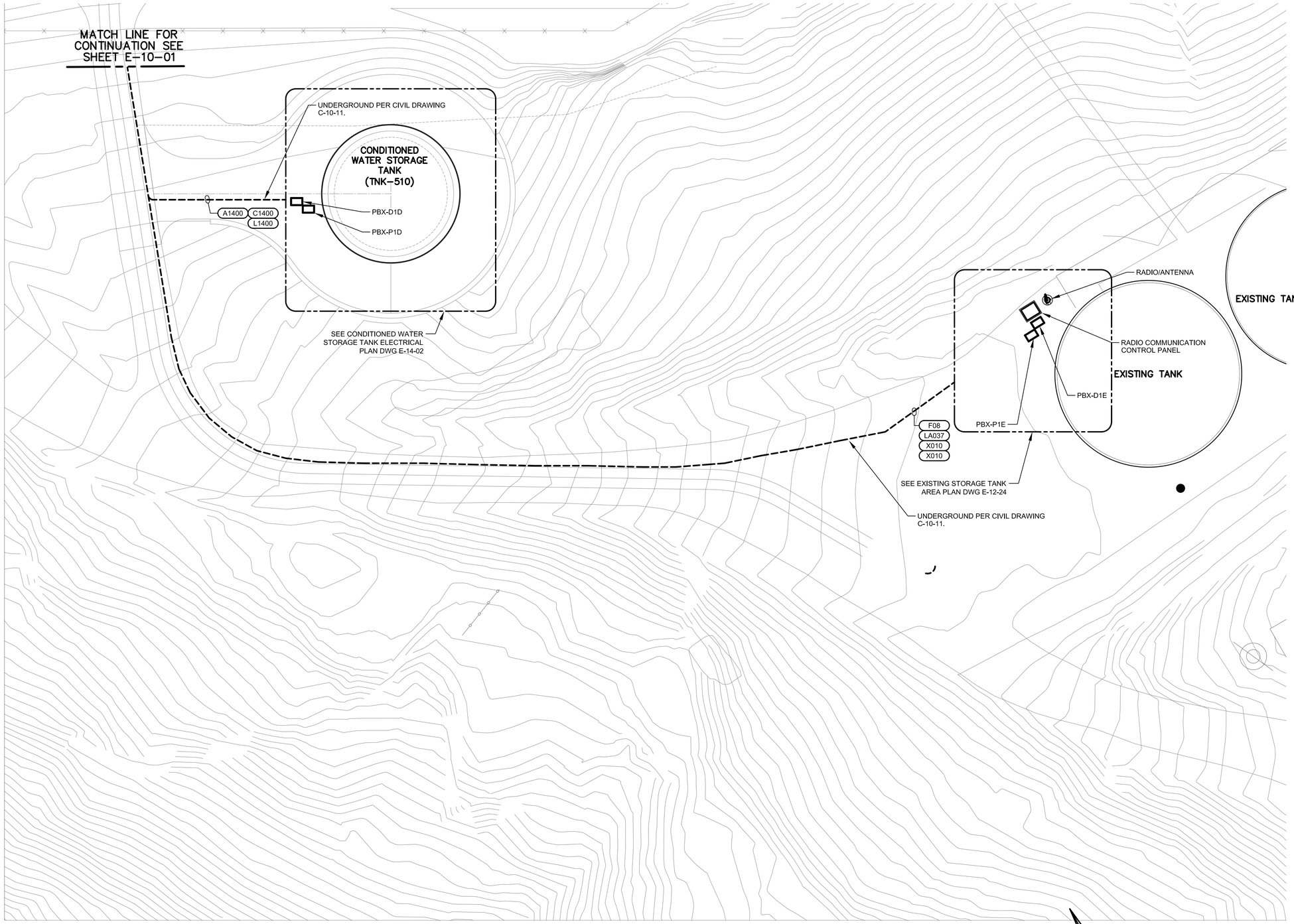

ELECTRICAL PLAN NOTES:

1. SEE ELECTRICAL PLAN NOTES ON DRAWING E-00-02.

DRAWING REFERENCED NOTES:

(1) CONDUIT ROUTE AND PULLBOX LOCATIONS SHOWN ARE APPROXIMATE. COORDINATE CONDUIT ROUTE AND PULLBOX LOCATIONS WITH CIVIL PIPELINE ROUTING. SEE DRAWINGS C-10-11 THROUGH C-10-13.

TCS AREA 4 CONDITIONED WATER STORAGE TANK POWER AND CONTROL PLAN (1)

- FINAL DESIGN - FOR AGENCY APPROVAL ONLY

REGISTERED PROFESSIONAL ENGINEER JOHN M. SIDOTI 20532 Exp. 9-30-17 ELECTRICAL STATE OF CALIFORNIA

FRISCH ENGINEERING, INC.
CONSULTING ELECTRICAL ENGINEERS
13405 FOLSOM BLVD, UNIT 600
FOLSOM, CA 95630
PH 916 353 1025
WWW.FRISCHENGINEERING.COM

ARCADIS

NO.	DATE	DESCRIPTION	GM/SPEC	DWN	CHKD	SUPV	APVD BY
1	11/18/15	FINAL DESIGN		MBY	TPF	JMS	RAO
0	9/8/14	PRE-FINAL (90%) DESIGN		MBY		TPF	

REVISIONS

APPROVED BY	
RAO	SO
	SUPV JMS
	DSGN MBY
	DWN MBY
	CHKD TPF
	OK JMS
	DATE
	SCALES N/A

TOPOCK GROUNDWATER REMEDIATION PROJECT
TCS AREA 4
ELECTRICAL SITE PLAN
GAS TRANSMISSION & DISTRIBUTION
PACIFIC GAS AND ELECTRIC COMPANY
SAN FRANCISCO, CALIFORNIA

MICROFILM	
BILL OF MATL	
DWG LIST	
SUPSDS	
SUPSD BY	
SHEET NO.	of SHEETS
E-10-03	REV 0

PLOT DATE: Oct 29, 2015 PLOT TIME: 3:57:13pm
FILENAME: E-10-01.dwg
N1808

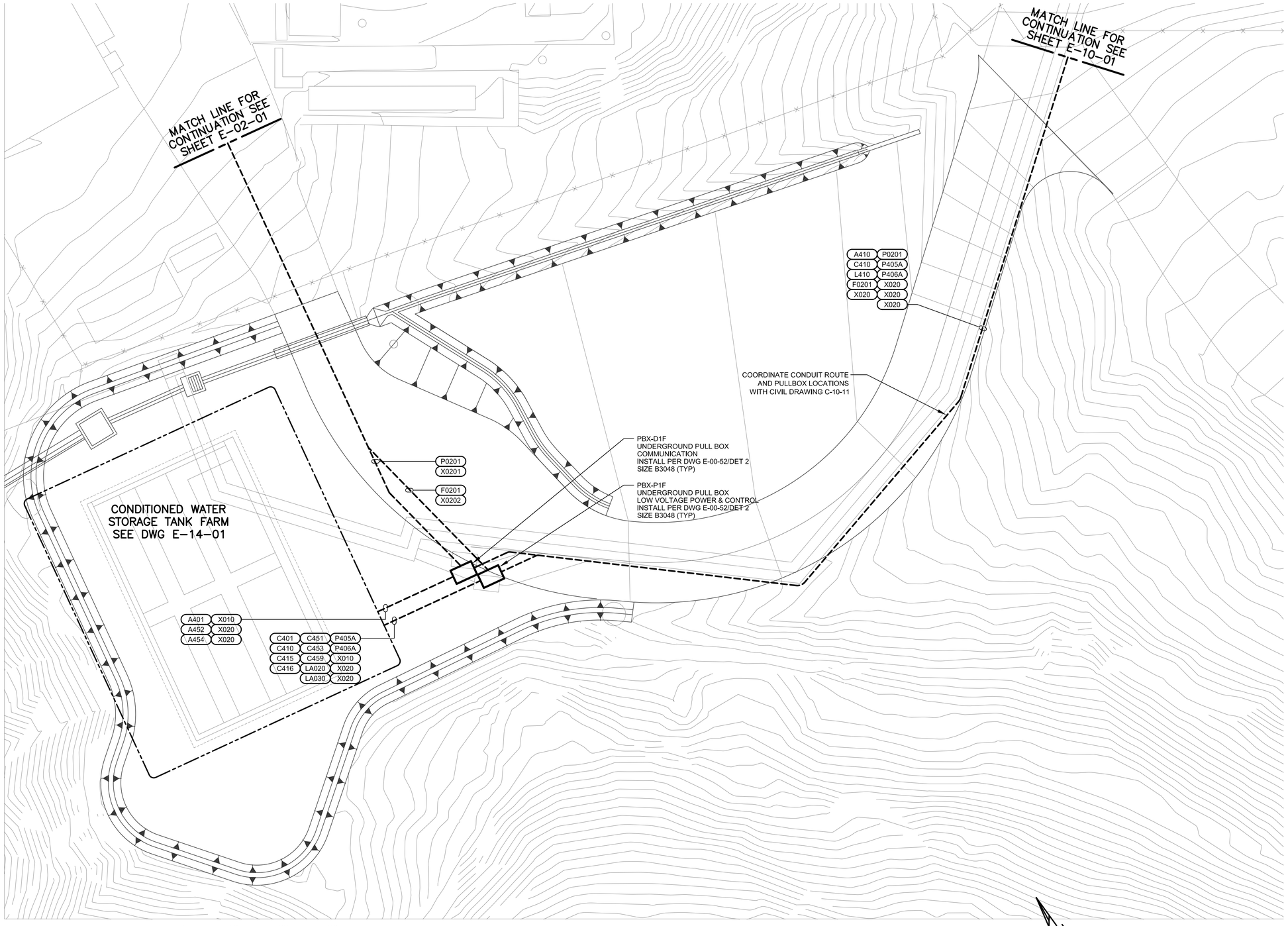

ELECTRICAL PLAN NOTES:

1. SEE ELECTRICAL PLAN NOTES ON DRAWING E-00-02.

DRAWING REFERENCED NOTES:

(1) CONDUIT ROUTE AND PULLBOX LOCATIONS SHOWN ARE APPROXIMATE. COORDINATE CONDUIT ROUTE AND PULLBOX LOCATIONS WITH CIVIL PIPELINE ROUTING. SEE DRAWINGS C-10-11 THROUGH C-10-13.

TCS AREA 3 CONDITIONED WATER TANK FARM POWER AND CONTROL PLAN (1)

- FINAL DESIGN - FOR AGENCY APPROVAL ONLY

REGISTERED PROFESSIONAL ENGINEER JOHN M. SIOOTIS 20532 Exp. 9-30-17 ELECTRICAL STATE OF CALIFORNIA

MICROFILM

FRISCH ENGINEERING, INC.
CONSULTING ELECTRICAL ENGINEERS
13405 FOLSOM BLVD, UNIT 600
FOLSOM, CA 95630
PH 916 353 1025
WWW.FRISCHENGINEERING.COM

ARCADIS

NO.	DATE	DESCRIPTION	GM/SPEC	DWN	CHKD	SUPV	APVD BY
1	11/18/15	FINAL DESIGN		MBY	TPF	JMS	RAO
0	9/8/14	PRE-FINAL (90%) DESIGN		MBY			TPF

REVISIONS

APPROVED BY	
RAO	SO
	SUPV JMS
	DSGN MBY
	DWN MBY
	CHKD TPF
	OK JMS
	DATE
	SCALES N/A

TOPOCK GROUNDWATER REMEDIATION PROJECT
TCS AREA 3
ELECTRICAL SITE PLAN
GAS TRANSMISSION & DISTRIBUTION
PACIFIC GAS AND ELECTRIC COMPANY
SAN FRANCISCO, CALIFORNIA

BILL OF MATL	
DWG LIST	
SUPSDS	
SUPSD BY	
SHEET NO.	of SHEETS
E-10-04	REV 0

PLOT DATE: Oct 29, 2015 PLOT TIME: 3:56:57pm
FILENAME: E-10-01.dwg
N1808

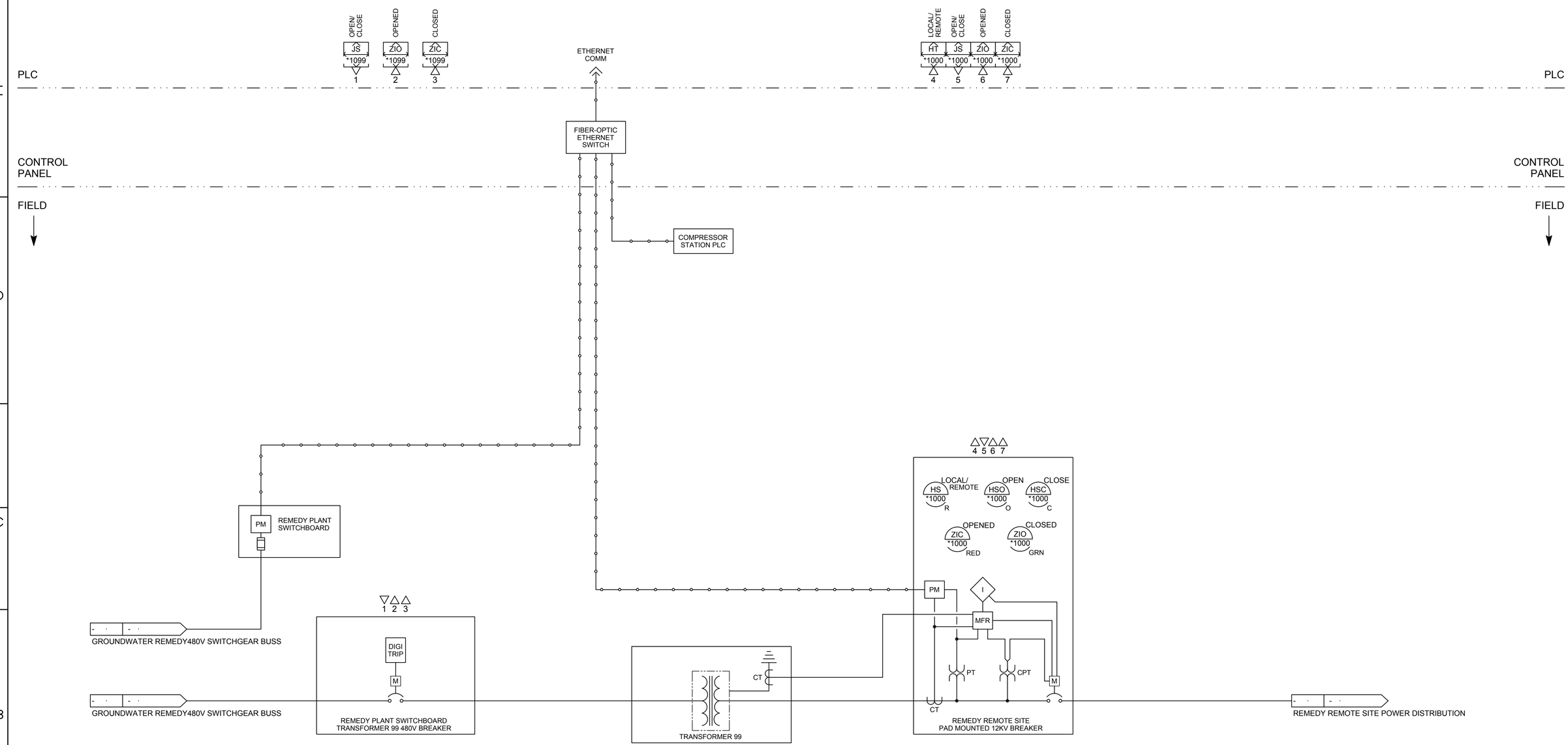

- FINAL DESIGN -
FOR AGENCY
APPROVAL ONLY

REGISTERED PROFESSIONAL ENGINEER
DWAYNE CAMPEAU
No. C-072175
Exp. 06/30/16
CIVIL
STATE OF CALIFORNIA

ETIC ENGINEERING

ARCADIS

NO.	DATE	DESCRIPTION	GM/SPEC	DWN	CHKD	SUPV	APVD BY
2	11/18/15	FINAL DESIGN		AJW	JPB	DAC	RAO
1	9/8/14	PRE-FINAL (90%) DESIGN		MBY			TPF
0	4/5/13	INTERMEDIATE (60%) DESIGN		MBY			TPF

REVISIONS

APPROVED BY: RAO

SO
SUPV
DSGN
DWN
CHKD
OK
DATE
SCALES

TOPOCK GROUNDWATER REMEDIATION PROJECT

P&ID
POWER DISTRIBUTION

GAS TRANSMISSION & DISTRIBUTION
PACIFIC GAS AND ELECTRIC COMPANY
SAN FRANCISCO, CALIFORNIA

MICROFILM
BILL OF MATL
DWG LIST
SUPSDS
SUPSD BY
SHEET NO. of SHEETS
I-10-01
REV 2

11/03/2015, 17:23, G:\Graphics\AR\TOPOCK-01\Submittal_100%\DWGs\I-Instrumentation\I-10-01.dwg, Tab: I-10-01

N1808

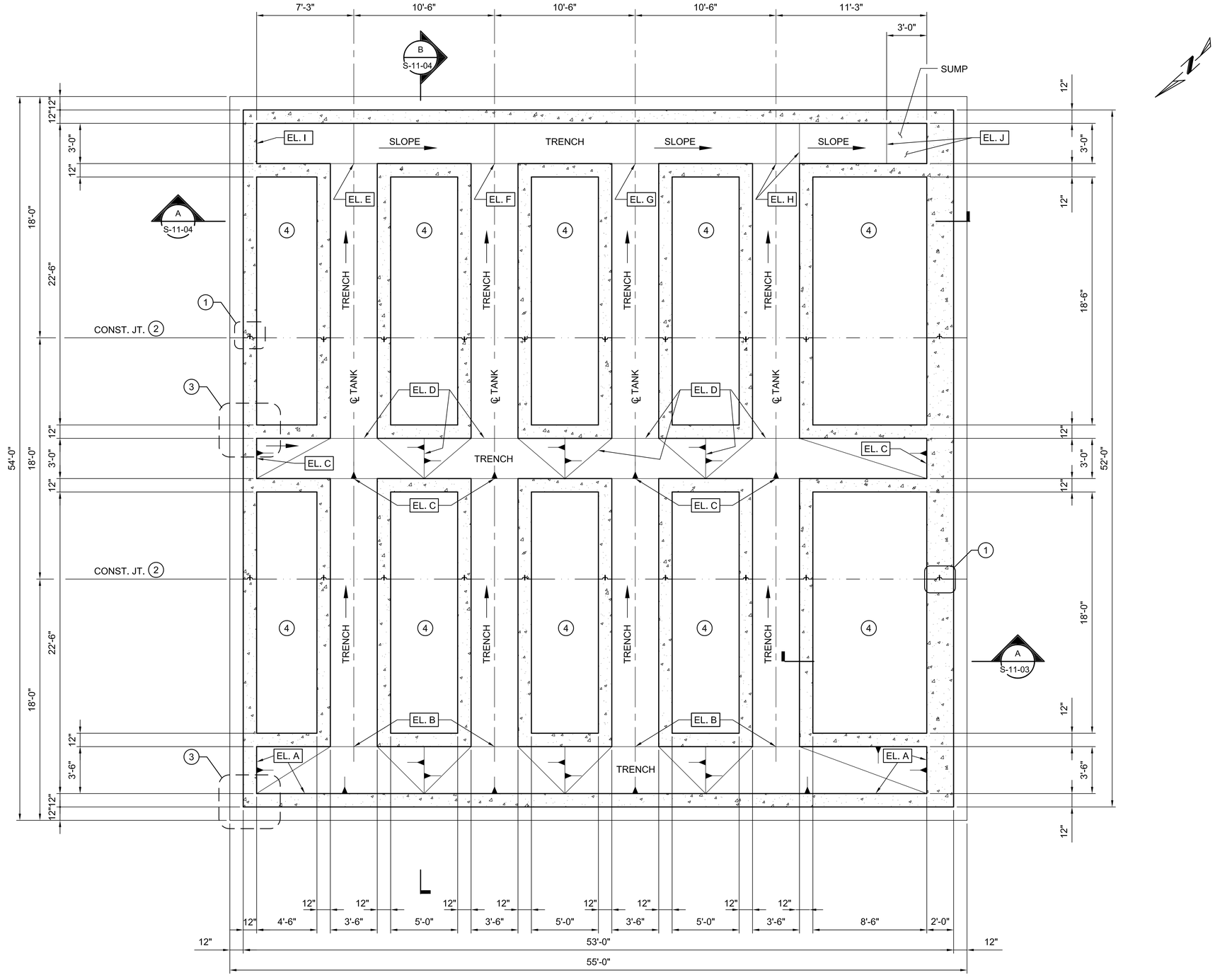

FOUNDATION PLAN

1/4" = 1'-0"

KEY NOTES:

1. WALL VERTICAL CONSTRUCTION JOINT WITH PREFORMED PLASTIC ADHESIVE WATERSTOP. SEE DETAIL 3 ON S-00-02.
2. FOUNDATION CONSTRUCTION JOINT WITH PREFORMED PLASTIC ADHESIVE WATERSTOP . SEE DETAIL 2 ON S-00-02.
3. DOUBLE REINFORCING WALL DETAIL, SEE DETAIL 5 ON S-00-02.
4. FILL SPACE BETWEEN TOP OF FOOTING AND BELOW SLAB-ON-GRADE WITH STRUCTURAL FILL OR CONTROLLED DENSITY FILL (CDF). SEE SPECIFICATION SECTION 31 23 23.

NOTES:

1. FOR GENERAL NOTES, SEE DWG. S-00-01.
2. COORDINATE PIPE PENETRATION SIZE AND LOCATIONS WITH MECHANICAL DRAWINGS.

ELEVATION TABLE		
EL. "X"	EL.	REMARK
A	622.50	TOP OF CONC. FILL
B	622.33	TOP OF CONC. FILL
C	622.17	TOP OF CONC. FILL
D	622.00	TOP OF CONC. FILL
E	621.83	TOP OF CONC. FILL
F	621.67	TOP OF CONC. FILL
G	621.50	TOP OF CONC. FILL
H	621.33	TOP OF CONC. FILL
I	622.00	TOP OF CONC. FILL
J	621.25	TOP OF SUMP

DESIGN LOADS

1. WIND LOADS

DESIGN HORIZONTAL WIND LOADS ON VERTICAL SURFACES:

20 PSF (MINIMUM)
BASIC WIND SPEED: 100 MPH
IMPORTANCE FACTOR: 1.25

2. SEISMIC LOADS

CBC, 2013 SITE CLASS: D
SEISMIC DESIGN CATEGORY: D

S_S = 0.230
S_1 = 0.120
S_{MS} = 0.368
S_{M1} = 0.279
S_{DS} = 0.245
S_{D1} = 0.168
IMPORTANCE FACTOR: 1.25

0 4' 8' 12'

SCALE: 1/4"=1'

- FINAL DESIGN - FOR AGENCY APPROVAL ONLY

REGISTERED PROFESSIONAL ENGINEER
VINOD M. BADANI
C-041281
EXP. DATE 3/31/17
CIVIL
STATE OF CALIFORNIA

E2 Consulting Engineers, Inc.
1900 Powell Street, Ste. 250
Emeryville, CA 94608
(510) 652-1164

ARCADIS

NO.	DATE	DESCRIPTION	GM/SPEC	DWN	CHKD	SUPV	APVD BY
2	11/18/15	FINAL DESIGN	MD	KJ	VMB	RAO	
1	09/08/14	PRE-FINAL (90%) DESIGN	MD	KJ	VMB	VMB	
0	04/05/13	INTERMEDIATE (60%) DESIGN	MD	KJ	VMB	VMB	

REVISIONS

APPROVED BY: RAO
SO
SUPV
DSGN
DWN
CHKD
OK
DATE
SCALES: 1/4"=1'-0"

TOPOCK GROUNDWATER REMEDIATION PROJECT
INFLUENT TANK FARM
FOUNDATION PLAN

GAS TRANSMISSION & DISTRIBUTION
PACIFIC GAS AND ELECTRIC COMPANY
SAN FRANCISCO, CALIFORNIA

MICROFILM
BILL OF MATL
DWG LIST
SUPSDS
SUPSD BY
SHEET NO. S-11-01 of SHEETS
REV 1

E2-S-XXX-1101AD.dwg

N1808

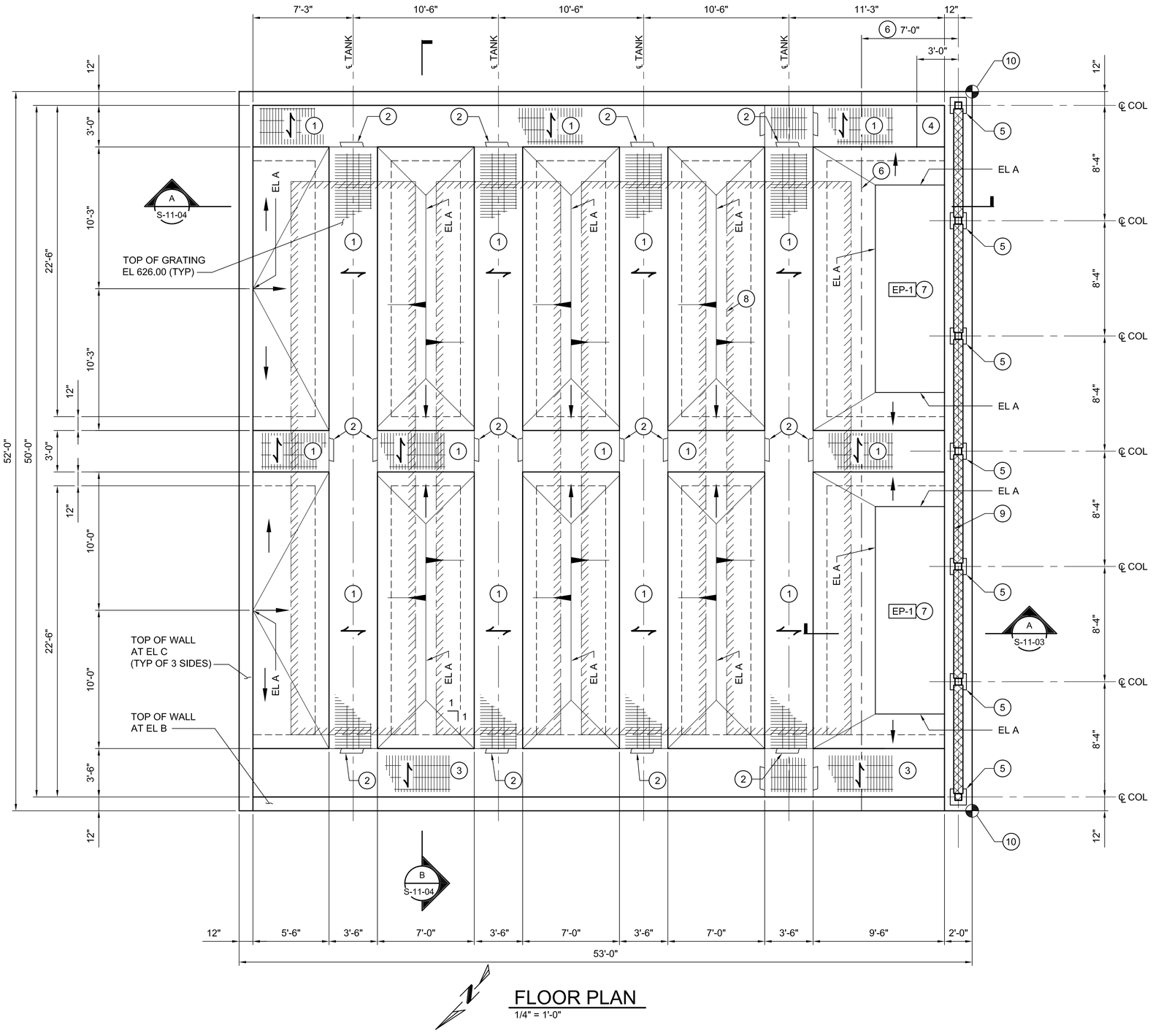

FLOOR PLAN

1/4" = 1'-0"

KEY NOTES:

1. TOP OF 3" DEEP (H14730) FRP FIBERGRATE GRATING. EL. 626.00 UNLESS NOTED OTHERWISE.
2. GRATING SUPPORT CHANNEL. SEE DETAIL 2 ON DWG. S-00-04.
3. TOP OF 3"x1/4" DEEP GALVANIZED STEEL GRATING. (TYPE W-15-4 MANUFACTURED BY GRATING PACIFIC INC.) EL. 626.00 UNLESS NOTED OTHERWISE.
4. REMOVABLE GRATING OVER SUMP.
5. CANOPY COLUMN BASE PLATE. SEE DETAIL 5 ON S-11-05.
6. EDGE OF CANOPY ROOF.
7. EP-1 6" HIGH EQUIPMENT PAD UNLESS NOTED OTHERWISE. SEE DETAIL 9 ON DWG S-00-02. EP PAD SIZE PER MANUFACTURER'S APPROVED SUBMITTALS.
8. INDICATES OUTLINE OF TANK. SEE MECHANICAL DRAWINGS.
9. 8" REINFORCED CONCRETE MASONRY WALL.
10. SEE DWG. C-10-04 FOR COORDINATES.

NOTES:

1. FOR GENERAL STRUCTURAL NOTES, SEE DWG S-00-01.

TABLE OF ELEVATIONS	
A	626.17
B	626.17
C	626.50

0 4' 8' 12'

SCALE: 1/4"=1'

- FINAL DESIGN - FOR AGENCY APPROVAL ONLY

REGISTERED PROFESSIONAL ENGINEER VINOD M. BADANI C-041281 EXP. DATE 3/31/17 CIVIL STATE OF CALIFORNIA

E2 Consulting Engineers, Inc.
1900 Powell Street, Ste. 250
Emeryville, CA 94608
(510) 652-1164

ARCADIS

NO.	DATE	DESCRIPTION	GM/SPEC	DWN	CHKD	SUPV	APVD BY
2	11/18/15	FINAL DESIGN		MD	KJ	VMB	RAO
1	09/08/14	PRE-FINAL (90%) DESIGN		MD	KJ	VMB	VMB
0	04/05/13	INTERMEDIATE (60%) DESIGN		MD	KJ	VMB	VMB

REVISIONS

APPROVED BY	
RAO	SO
	SUPV
	DSGN
	DWN
	CHKD
	OK
	DATE
	SCALES 1/4"=1'-0"

TOPOCK GROUNDWATER REMEDIATION PROJECT
INFLUENT TANK FARM
FLOOR PLAN

GAS TRANSMISSION & DISTRIBUTION
PACIFIC GAS AND ELECTRIC COMPANY
SAN FRANCISCO, CALIFORNIA

MICROFILM	
BILL OF MATL	
DWG LIST	
SUPSDS	
SUPSD BY	
SHEET NO.	of SHEETS
S-11-02	REV 1

E2-S-XXX-1101AD.dwg

N1808

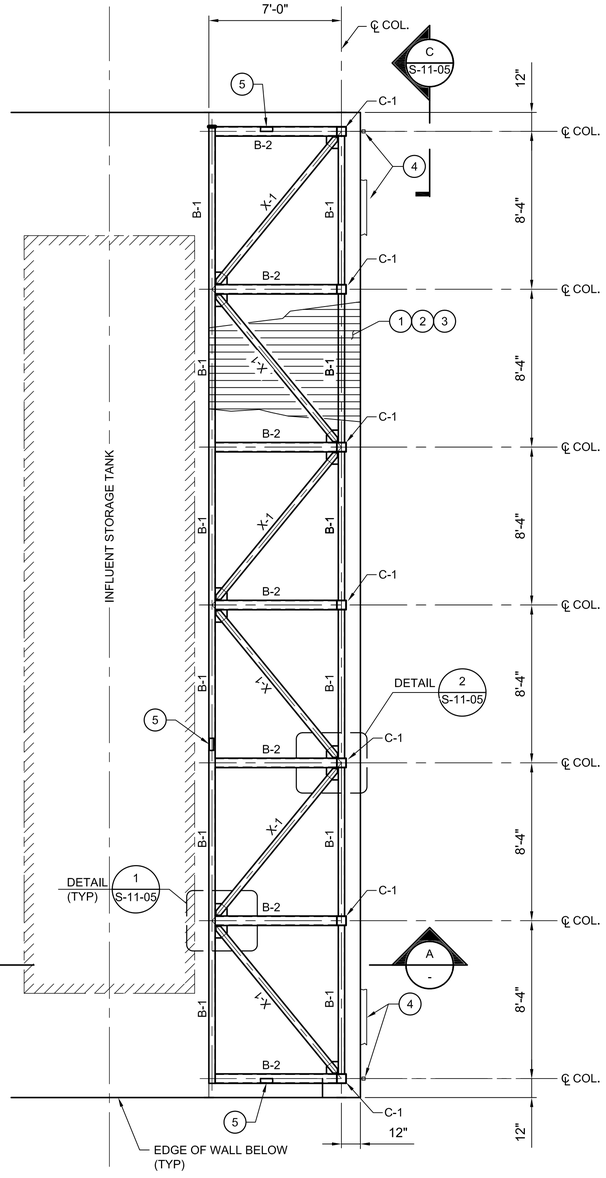

CANOPY PLAN
1/4" = 1'-0"

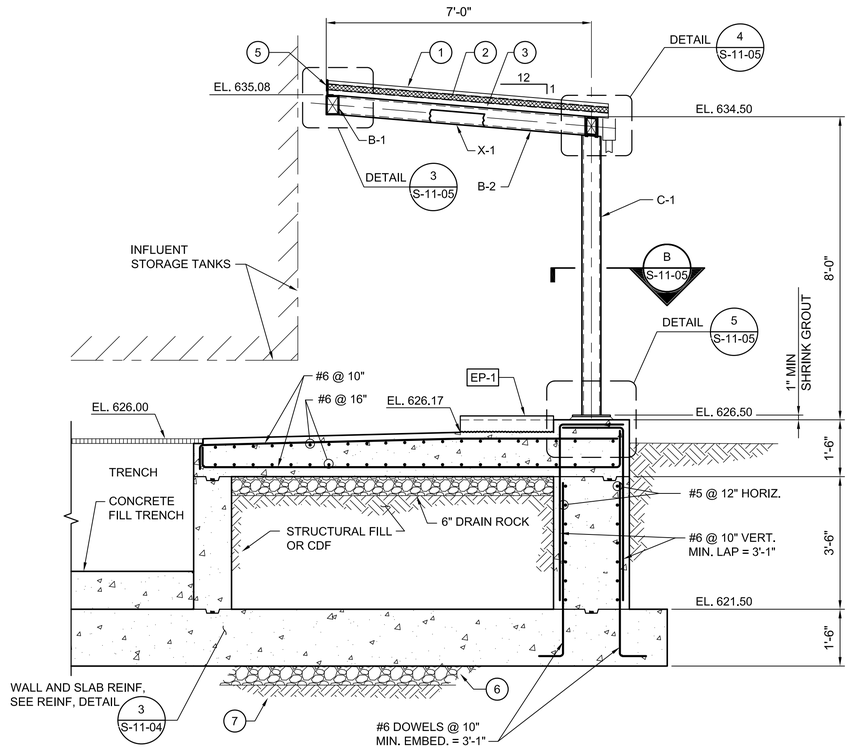

@ COLUMN (MASONRY WALL NOT SHOWN)
1/2" = 1'-0"

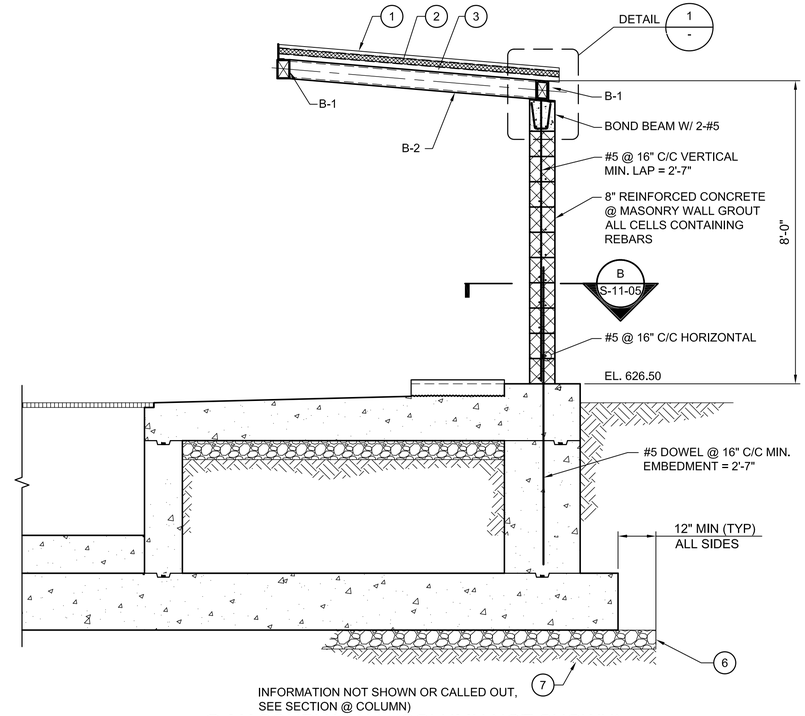

@ MASONRY WALL (COLUMN NOT SHOWN)
1/2" = 1'-0"

A SECTION
1/2" = 1'-0"
-
S-11-01, S-11-02

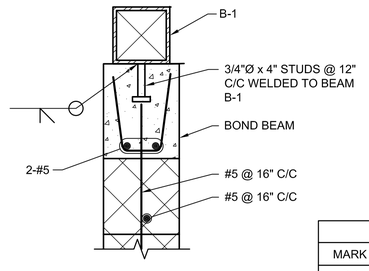

1 DETAIL
1 1/2" = 1'-0"
-

STEEL BEAM SCHEDULE			
MARK	SIZE	WALL "T"	REMARK
B-1	HSS 6x4	1/4	
B-2	HSS 6x6	3/8	
X-1	HSS 4x4	1/4	HORIZONTAL BRACING
C-1	HSS 6x6	3/8	COLUMNS

KEY NOTES:

1. 1 1/2" STANDING SEAM METAL ROOF. SEE ARCHITECTURAL DRAWINGS.
2. 2" RIGID INSULATION
3. ROOF DECK: 1 1/2" DEEP X 36" WIDE PANEL (6 RIBS @ 6" C/C PER PANEL) GALVANIZED, (18 GAUGE)
   MINIMUM PROPERTIES/LF OF WIDTH:
   I = 0.29 IN /LF
   +S = 0.315 IN /LF
   -S = 0.316 IN /LF

   CONNECTION:
   1. USE #2 GALVANIZED SCREWS OR 1/2"Ø PUDDLE WELDS AT 6" C/C (6 PER SHEET MIN. FOR 36" WIDE PANELS) TO ATTACH ROOF DECK TO SUPPORTING MEMBERS.
   2. USE # 2 GALVANIZED SCREWS @ 12" C/C FOR SIDE CONNECTIONS.
4. GUTTER AND DOWNSPOUT. SEE ARCHITECTURAL DRAWINGS FOR DETAILS.
5. CLOSURE ANGLE THREE SIDES.
6. 6" THICK, CRUSHED ROCK
7. STRUCTURAL FILL, 95% COMPACTION (MIN.) PER ASTM D 1557

NOTES:

1. FOR ADDITIONAL DETAILS, SEE ARCHITECTURAL DWGS.

- FINAL DESIGN - FOR AGENCY APPROVAL ONLY

REGISTERED PROFESSIONAL ENGINEER
VINOD M. BADANI
C-041281
EXP. DATE 3/31/17
CIVIL
STATE OF CALIFORNIA

E2 Consulting Engineers, Inc.
1900 Powell Street, Ste. 250
Emeryville, CA 94608
(510) 652-1164

ARCADIS

NO.	DATE	DESCRIPTION	GM/SPEC	DWN	CHKD	SUPV	APVD	BY
2	11/18/15	FINAL DESIGN		MD	KJ	VMB	RAO	
1	09/08/14	PRE-FINAL (90%) DESIGN		MD	KJ	VMB	VMB	
0	04/05/13	INTERMEDIATE (60%) DESIGN		MD	KJ	VMB	VMB	

REVISIONS

APPROVED BY	SO
RAO	SUPV
	DSGN
	DWN
	CHKD
	OK
	DATE
	SCALES AS NOTED

TOPOCK GROUNDWATER REMEDIATION PROJECT
INFLUENT TANK FARM CANOPY PLAN AND SECTION
GAS TRANSMISSION & DISTRIBUTION
PACIFIC GAS AND ELECTRIC COMPANY
SAN FRANCISCO, CALIFORNIA

MICROFILM	
BILL OF MATL	
DWG LIST	
SUPSDS	
SUPSD BY	
SHEET NO.	of SHEETS
S-11-03	REV 1

E2-S-XXX-1101AD.dwg

N1808

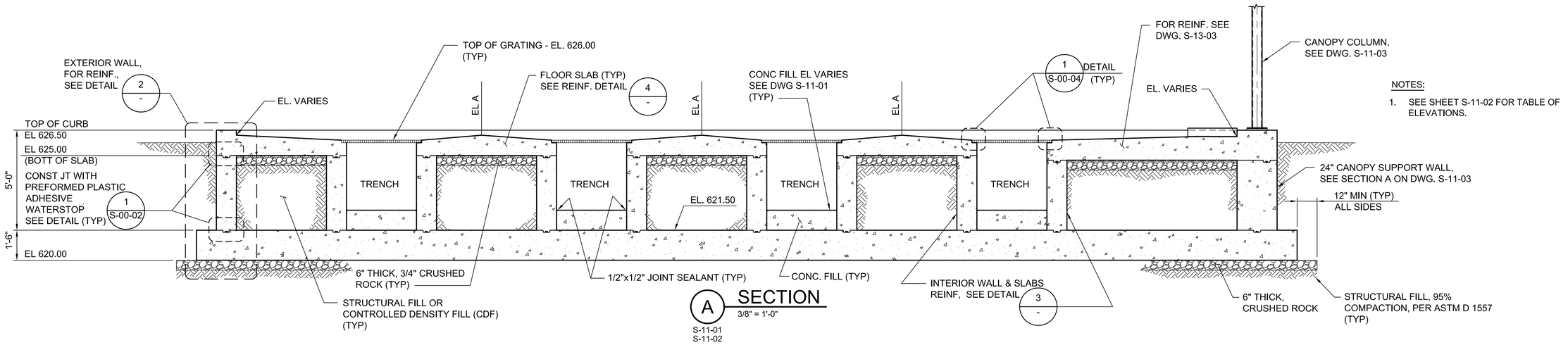

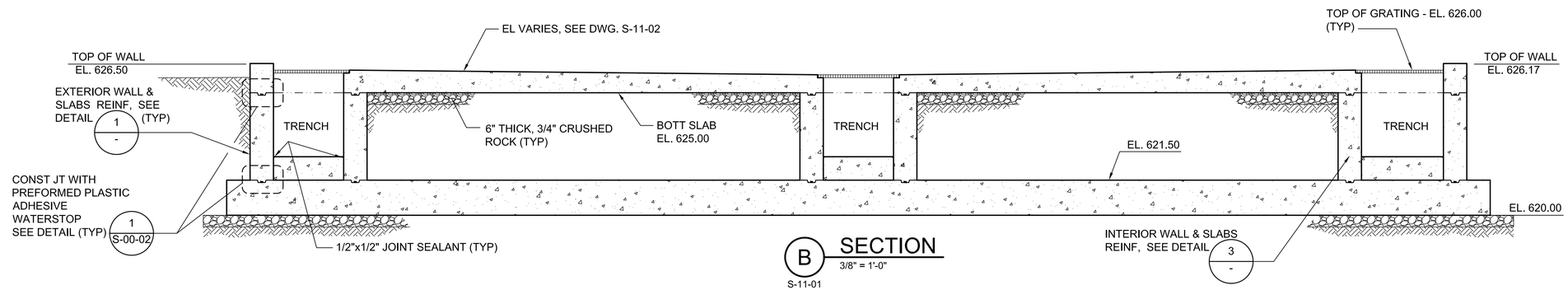

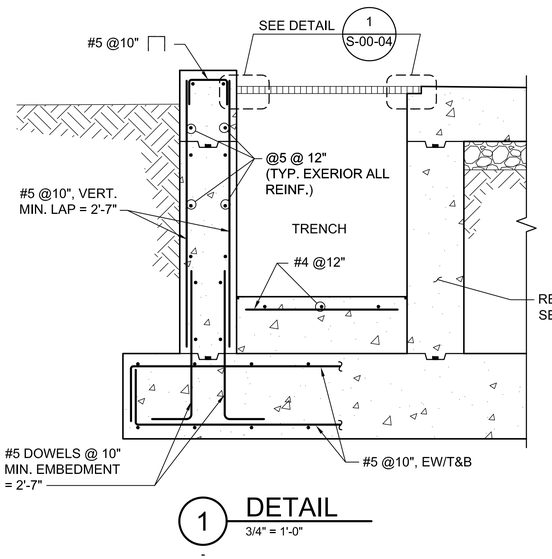

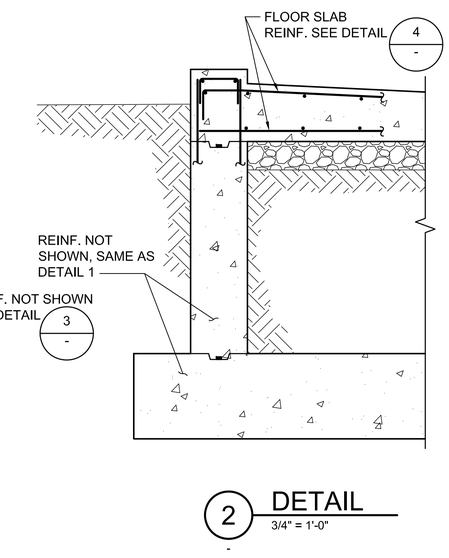

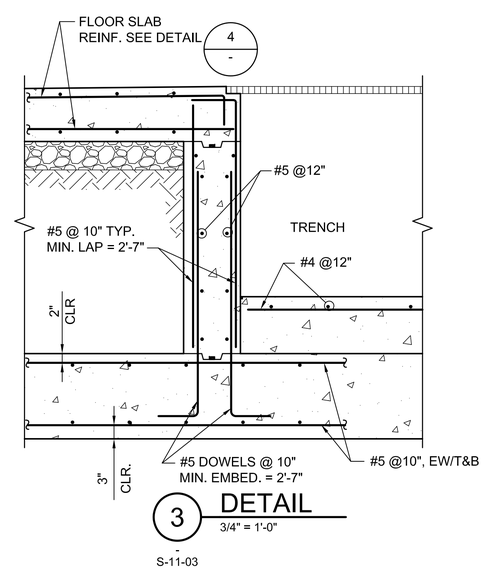

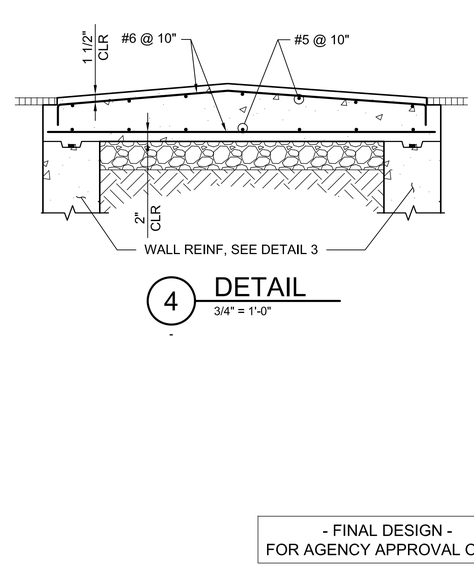

- FINAL DESIGN -
FOR AGENCY APPROVAL ONLY

REGISTERED PROFESSIONAL ENGINEER VINOD M. BADANI C-041281 EXP. DATE 3/31/17 CIVIL STATE OF CALIFORNIA

E2 Consulting Engineers, Inc.
1900 Powell Street, Ste. 250
Emeryville, CA 94608
(510) 652-1164

ARCADIS

NO.	DATE	DESCRIPTION	GM/SPEC	DWN	CHKD	SUPV	APVD BY
1	11/18/15	FINAL DESIGN		MD	KJ	VMB	RAO
0	09/08/14	PRE-FINAL (90%) DESIGN		MD	KJ	VMB	VMB

REVISIONS

APPROVED BY	
RAO	SO
	SUPV
	DSGN
	DWN
	CHKD
	OK
	DATE
	SCALES AS NOTED

TOPOCK GROUNDWATER REMEDIATION PROJECT
INFLUENT TANK FARM SECTIONS AND DETAILS
GAS TRANSMISSION & DISTRIBUTION
PACIFIC GAS AND ELECTRIC COMPANY
SAN FRANCISCO, CALIFORNIA

MICROFILM	
BILL OF MATL	
DWG LIST	
SUPSDS	
SUPSD BY	
SHEET NO.	of SHEETS
S-11-04	REV 0

E2-S-XXX-1103AD.dwg

N180B

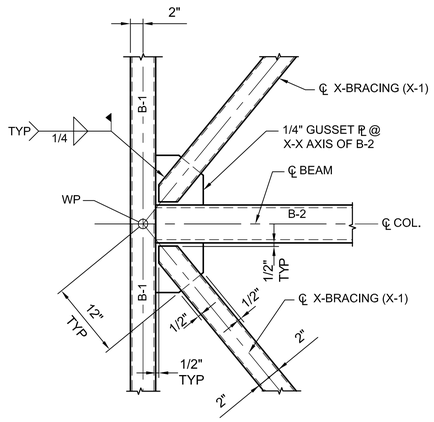

1 DETAIL
1" = 1'-0"
S-11-03

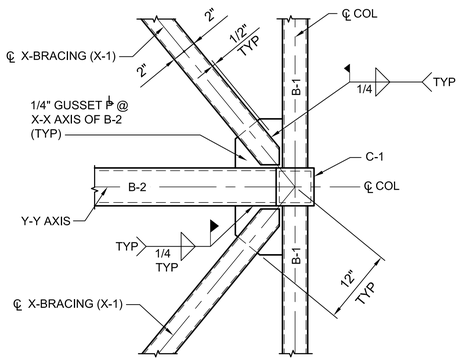

2 DETAIL
1" = 1'-0"
S-11-03

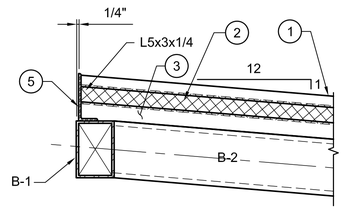

SECTION A-A

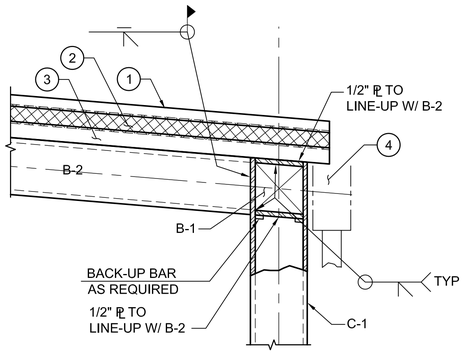

SECTION B--B

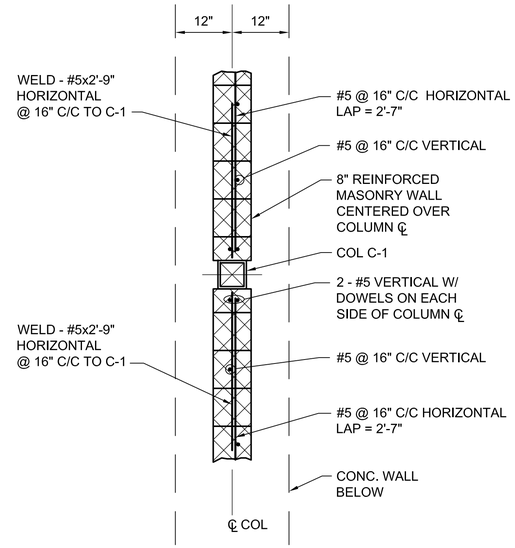

B SECTION
3/4" = 1'-0"
S-11-03

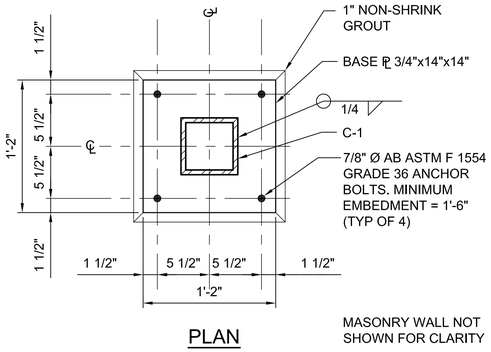

PLAN

MASONRY WALL NOT
SHOWN FOR CLARITY

5 DETAIL
1 1/2" = 1'-0"
S-11-02, S-11-03

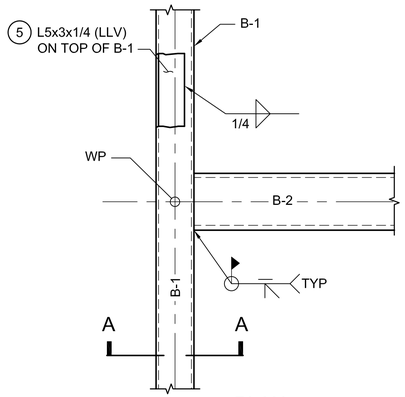

PLAN

3 DETAIL
1 1/2" = 1'-0"
S-11-03

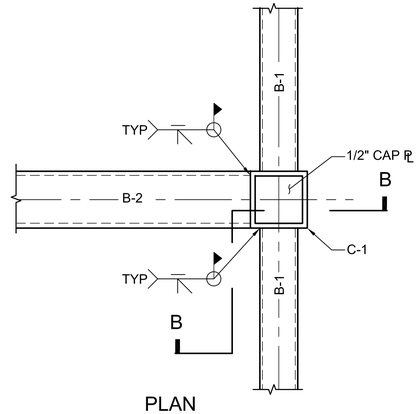

PLAN

4 DETAIL
1 1/2" = 1'-0"
S-11-03

C SECTION
1" = 1'-0"
S-11-03

KEY NOTES

1. 1 1/2" STANDING SEAM METAL ROOF, SEE ARCHITECTURAL DRAWINGS.
2. 2" RIGID INSULATION.
3. ROOF DECK: 1 1/2" DEEP X 36" WIDE PANEL (6 RIBS @ 6" C/C PER PANEL) GALVANIZED, (18 GAUGE)
   MINIMUM PROPERTIES/LF OF WIDTH:
   I = 0.29 IN /LF
   +S = 0.315 IN /LF
   -S = 0.316 IN /LF

   CONNECTION:
   1. USE #2 GALVANIZED SCREWS OR 1/2"Ø PUDDLE WELDS AT 6" C/C (6 PER SHEET MIN. FOR 36" WIDE PANELS) TO ATTACH ROOF DECK TO SUPPORTING MEMBERS.
   2. USE # 2 GALVANIZED SCREWS @ 12" C/C FOR SIDE CONNECTIONS.
4. FOR GUTTER AND DOWNSPOUT, SEE ARCHITECTUTAL DRAWINGS.
5. CLOSURE ANGLE THREE SIDES.

- FINAL DESIGN -
FOR AGENCY
APPROVAL ONLY

REGISTERED PROFESSIONAL ENGINEER
VINOD M. BADANI
C-041281
EXP. DATE 3/31/17
CIVIL
STATE OF CALIFORNIA

E2 Consulting Engineers, Inc.
1900 Powell Street, Ste. 250
Emeryville, CA 94608
(510) 652-1164

ARCADIS

NO.	DATE	DESCRIPTION	GM/SPEC	DWN	CHKD	SUPV	APVD BY
1	11/18/15	FINAL DESIGN		MD	KJ	VMB	RAO
0	09/08/14	PRE-FINAL (90%) DESIGN		MD	KJ	VMB	VMB

REVISIONS

APPROVED BY	
RAO	SO
	SUPV
	DSGN
	DWN
	CHKD
	OK
	DATE
	SCALES AS NOTED

TOPOCK GROUNDWATER REMEDIATION PROJECT
INFLUENT TANK FARM CANOPY SECTIONS AND DETAILS
GAS TRANSMISSION & DISTRIBUTION
PACIFIC GAS AND ELECTRIC COMPANY
SAN FRANCISCO, CALIFORNIA

MICROFILM	
BILL OF MATL	
DWG LIST	
SUPSDS	
SUPSD BY	
SHEET NO.	of SHEETS
S-11-05	REV 0

E2-S-XXX-1102AD.dwg

N180B

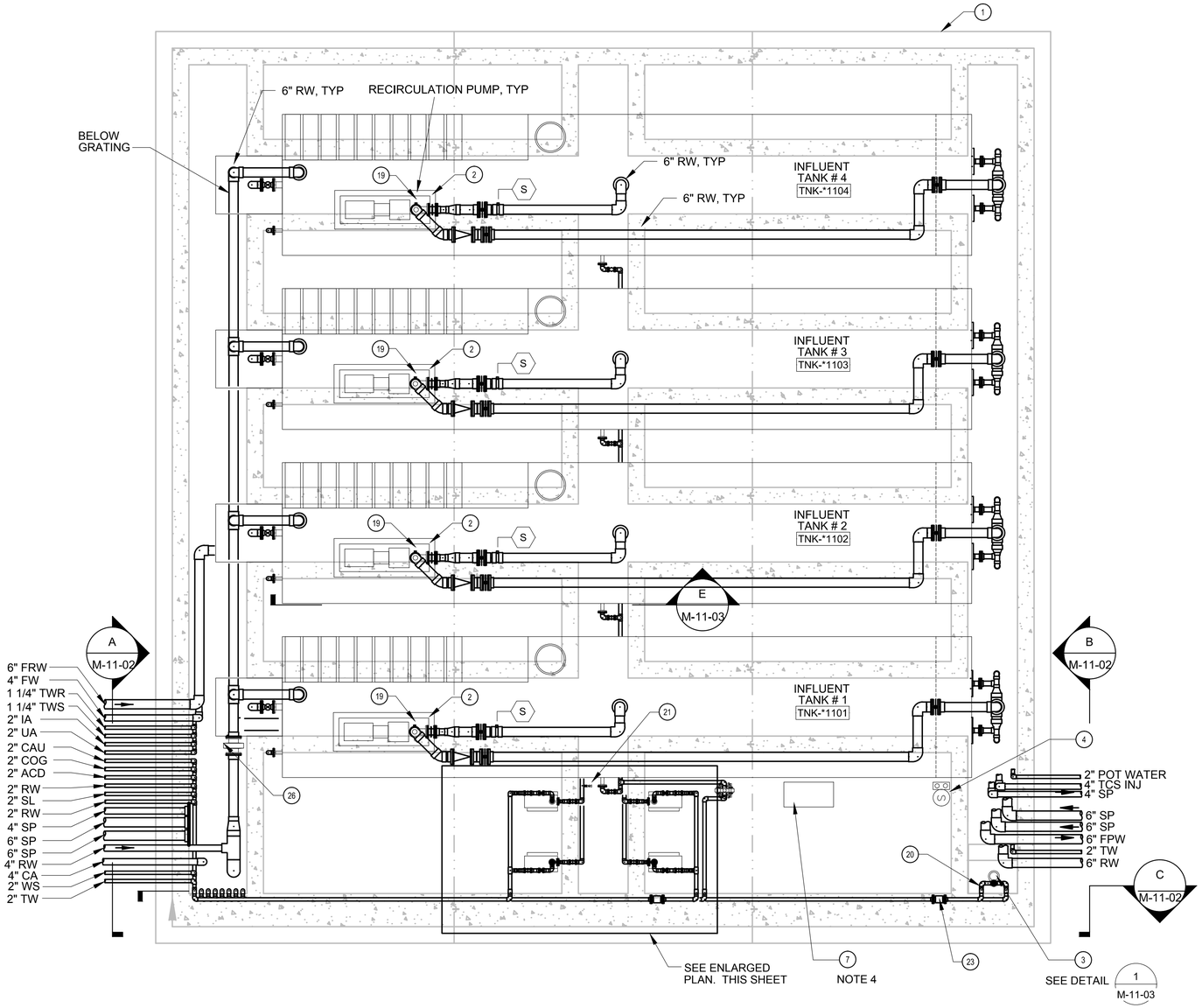

PLAN

1/4"=1'-0"

0 4 8 2

SCALE: 1/4"=1'-0"

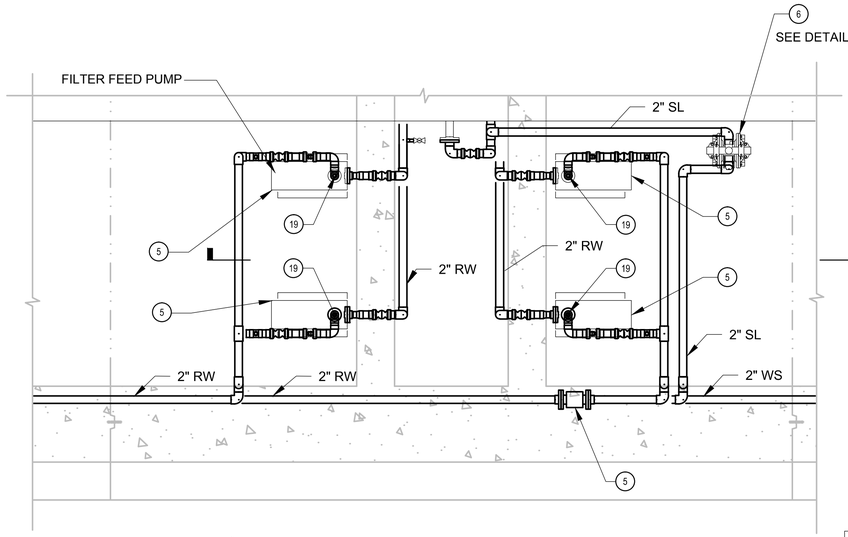

ENLARGED PLAN

1/8"=1'-0"

0 2 4 6

SCALE: 1/2"=1'-0"

LEGEND:

(7) REFERENCE ITEM NUMBER EQUIPMENT SCHEDULE ON SHEET M-11-05.

NOTES:

1. INVERT ELEVATION OF INLET AND OUTLET PIPING IS 624.5'.
2. PROVIDE 4" FIBER AND 4" ELECTRICAL THROUGH THIS AREA.
3. SEE DRAWING S-11-01, 02, 03 FOR STRUCTURAL DETAILS AND C-10-02, C-11-01 FOR CIVIL DETAILS.
4. VARIABLE SPEED CONSTANT PRESSURE SYSTEM FOR SEAL WATER SUPPLY: ITT GOULDS - 1 EA AQUABOOST II 2AB2 PRESS. CONTROL SYSTEM, PRESSURE TANK, 1 EA 2 MH1E5D0 HORZ. MULTI STAGE CENT. PUMP, 40 FT TRANSDUCER CABLE. STRAINER (SEE I-12-05) SHALL BE MUELLER 351M, NIBCO T-222-B OR EQUAL.
5. HOSE BIBB.
6. PIPE SUPPORTS NOT SHOWN. CONTRACTOR TO SUPPORT PIPES IN ACCORDANCE WITH SPEC. 40 05 15.
7. ALL COMPRESSED AIR PIPING AND FITTINGS SHALL BE VIEGA PRO PRESS COPPER PIPE OR APPROVED EQUAL WALL THICKNESS SHALL BE SUITABLE FOR COMPRESSED AIR AT 110 PSIG AND 130 F AMBIENT (TYPE K OR BETTER).
8. EQUIPMENT TAGS SHOWN ARE UNIQUELY IDENTIFIED WITH THE ADDITION OF THE LOCATION ID CODE OF "RTP01", BEFORE THE NUMERIC CODE.
9. FOR PIPE ID AND ABBREVIATION SCHEDULE, SEE C-00-12

- FINAL DESIGN - FOR AGENCY APPROVAL ONLY

REGISTERED PROFESSIONAL ENGINEER BENJAMIN J. WUERL C 67811 EXP 6/30/17 STATE OF CALIFORNIA

ETIC ENGINEERING

ARCADIS

NO.	DATE	DESCRIPTION	GM/SPEC	DWN	CHKD	SUPV	APVD BY
2	11/18/15	FINAL DESIGN	AJW	KLD	BW	RAO	
1	09/08/14	PRE-FINAL .90% DESIGN	GJ	JP	RH	CH	
0	06/2013	INTERMEDIATE .60% DESIGN	DS	WF	JP	CH	

REVISIONS

APPROVED BY: RAO

SO | SUPV | DSGN | DWN | CHKD | OK | DATE | SCALES

TOPOCK GROUNDWATER REMEDIATION PROJECT

INFLUENT TANK FARM PLAN

GAS TRANSMISSION & DISTRIBUTION
PACIFIC GAS AND ELECTRIC COMPANY
SAN FRANCISCO, CALIFORNIA

MICROFILM

BILL OF MATL

DWG LIST

SUPSDS

SUPSD BY

SHEET NO. M-11-01 of SHEETS

REV 2

N180B

11/02/2015, 11:10, G:\Graphics\ART\TOPOCK-01\Submittal_100%\DWG\M-Mechanical\M-11-01.dwg, Tab: M-11-01

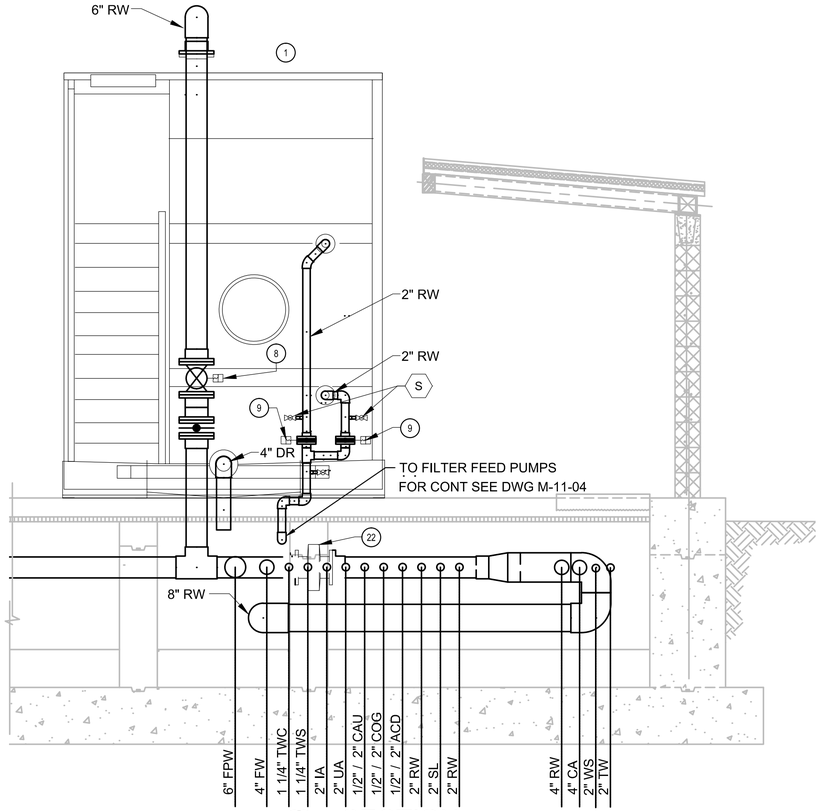

A SECTION
1/2" = 1'-0"
M-11-01

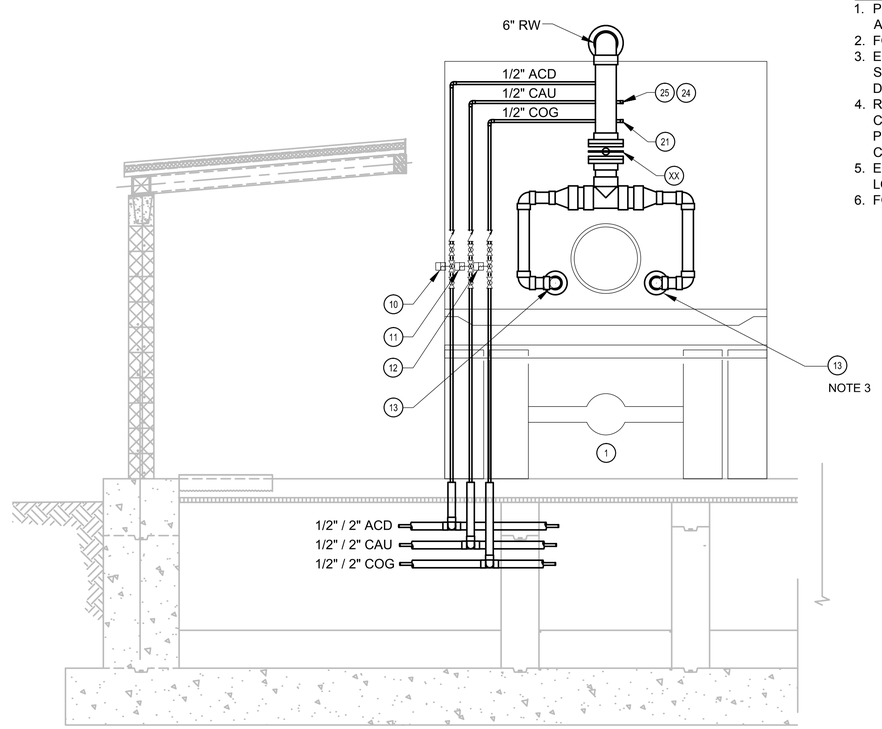

B SECTION
1/2" = 1'-0"
M-11-01

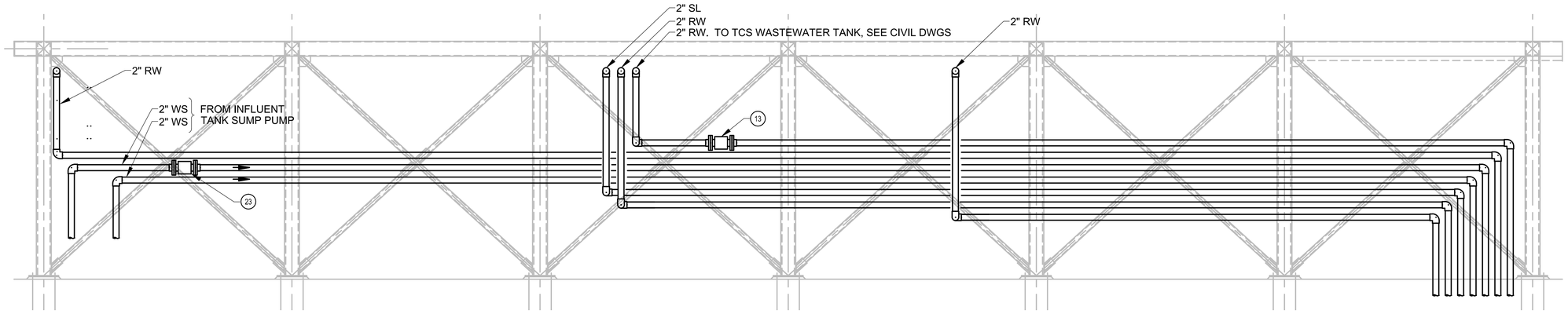

C SECTION
1/2" = 1'-0"
M-11-01

0 2 4 6
SCALE: 1/2"=1'-0"

LEGEND:

(7) REFERENCE ITEM NUMBER E□UIPMENT SCHEDULE ON SHEET M-11-05.

NOTES:
1. PIPE SUPPORTS NOT SHOWN. CONTRACTOR TO SUPPORT PIPES IN ACCORDANCE WITH SPEC. 40 05 15.
2. FOR TNK-202, TNK-203, TNK-204, PIPING SHOWN ENTERING THE TANK IS TYPICAL.
3. EDUCTORS SHALL BE POSITIONED E□UIDISTANT FROM EACH OTHER AND TANK SIDES. VERTICAL POSITION SHALL BE SHOWN ON APPROVED EDUCTOR SHOP DRAWINGS.
4. ROUTE INSTRUMENT AIR TO VALVES AND E□UIPMENT AS RE□UIRED. ALL COMPRESSED AIR PIPING AND FITTINGS SHALL BE VIEGA PRO PRESS COPPER PIPE OR APPROVED E□UAL WALL THICKNESS SHALL BE SUITABLE FOR COMPRESSED AIR AT 110 PSIG AND 130 F AMBIENT □TYPE K OR BETTER□
5. E□UIPMENT TAGS SHOWN ARE UNI□UELY IDENTIFIED WITH THE ADDITION OF THE LOCATION ID CODE OF "RTP01", BEFORE THE NUMERIC CODE.
6. FOR PIPE ID AND ABBREVIATION SCHEDULE, SEE C-00-12.

- FINAL DESIGN -
FOR AGENCY
APPROVAL ONLY

REGISTERED PROFESSIONAL ENGINEER
BENJAMIN J. WUERL
C 67811
EXP 6/30/17
STATE OF CALIFORNIA

ETIC ENGINEERING
ARCADIS

NO.	DATE	DESCRIPTION	GM/SPEC	DWN	CHKD	SUPV	APVD BY
1	11/18/15	FINAL DESIGN	AJW	KLD	BW	RAO	
0	09/08/14	PRE-FINAL .90% .DESIGN	DS	WF	JP	CH	

REVISIONS

APPROVED BY	
RAO	SO
	SUPV
	DSGN
	DWN
	CHKD
	OK
	DATE
	SCALES

TOPOCK GROUNDWATER REMEDIATION PROJECT

INFLUENT TANK FARM SECTIONS AND DETAILS 1

GAS TRANSMISSION & DISTRIBUTION
PACIFIC GAS AND ELECTRIC COMPANY
SAN FRANCISCO, CALIFORNIA

MICROFILM	
BILL OF MATL	
DWG LIST	
SUPSDS	
SUPSD BY	
SHEET NO.	of SHEETS
M-11-02	REV 1

N1808

11/02/2015, 11:16, G:\Graphics\ARITOPOCK-01\Submittal_100%\DWGs\M-Mechanical\M-11-02.dwg, Tab: M-11-02

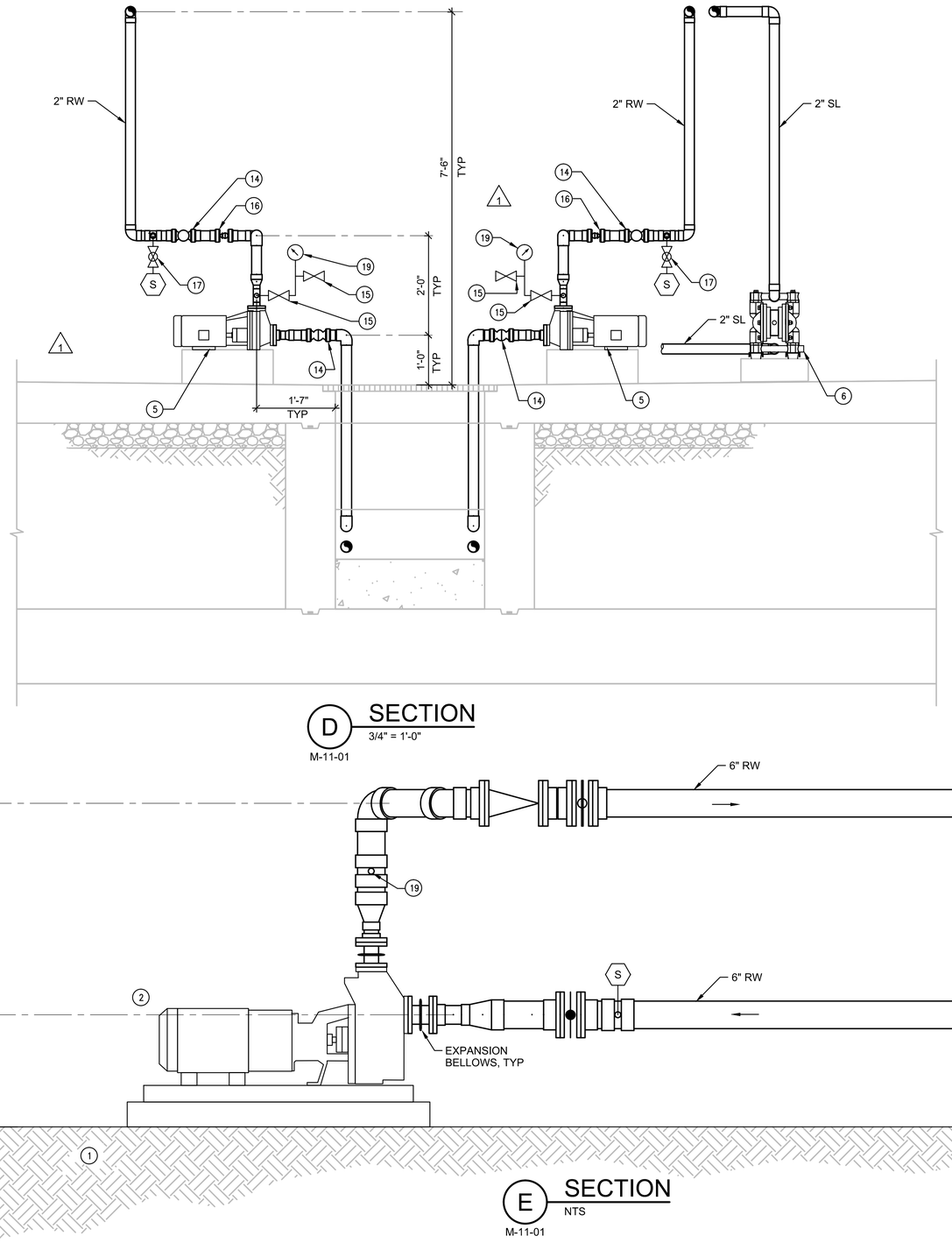

D SECTION
3/4" = 1'-0"
M-11-01

E SECTION
NTS
M-11-01

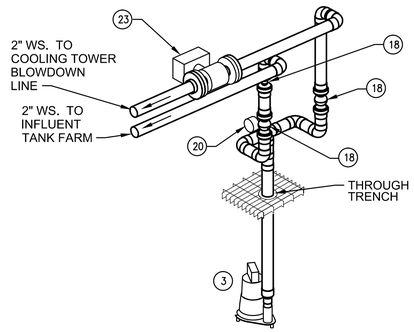

1 SUMP PUMP ISOMETRIC
NTS
M-11-01

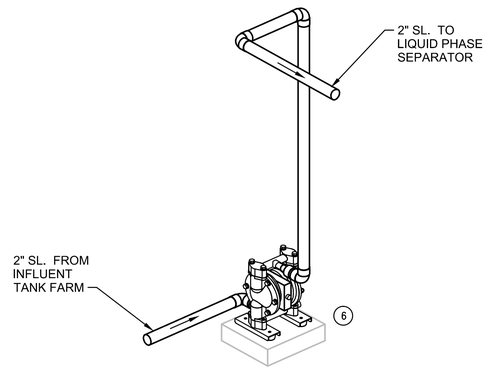

2 SOLIDS PUMP ISOMETRIC
NTS
M-11-01

0 2 4 6
SCALE: 1/2"=1'-0"

LEGEND:

(7) REFERENCE ITEM NUMBER E□UIPMENT SCHEDULE ON SHEET M-11-05.

NOTES:
1. PIPE SUPPORTS NOT SHOWN. CONTRACTOR TO SUPPORT PIPES IN ACCORDANCE WITH SPEC. 40 05 15.
2. E□UIPMENT TAGS SHOWN ARE UNI□UELY IDENTIFIED WITH THE ADDITION OF THE LOCATION ID CODE OF "RTP01", BEFORE THE NUMERIC CODE.
3. FOR PIPE ID AND ABBREVIATION SCHEDULE, SEE C-00-12.

- FINAL DESIGN -
FOR AGENCY
APPROVAL ONLY

REGISTERED PROFESSIONAL ENGINEER
BENJAMIN J. WUERL
C 67811
Exp 6/30/17
STATE OF CALIFORNIA

ETIC ENGINEERING
ARCADIS

NO.	DATE	DESCRIPTION	GM/SPEC	DWN	CHKD	SUPV	APVD BY
1	11/18/15	FINAL DESIGN	AJW	KLD	BW	RAO	
0	09/08/14	PRE-FINAL 90% DESIGN	DS	WF	JP	CH	

REVISIONS

APPROVED BY	
RAO	SO
	SUPV
	DSGN
	DWN
	CHKD
	OK
	DATE
	SCALES

TOPOCK GROUNDWATER REMEDIATION PROJECT

INFLUENT TANK FARM SECTIONS AND DETAILS 2

GAS TRANSMISSION & DISTRIBUTION
PACIFIC GAS AND ELECTRIC COMPANY
SAN FRANCISCO, CALIFORNIA

MICROFILM	
BILL OF MATL	
DWG LIST	
SUPSDS	
SUPSD BY	
SHEET NO.	of SHEETS
M-11-03	REV 1

N1808

11/02/2015, 11:19, G:\Graphics\AR\TOPOCK-01\Submittal_100%\DWGs\M-Mechanical\M-11-03.dwg, Tab: M-11-03

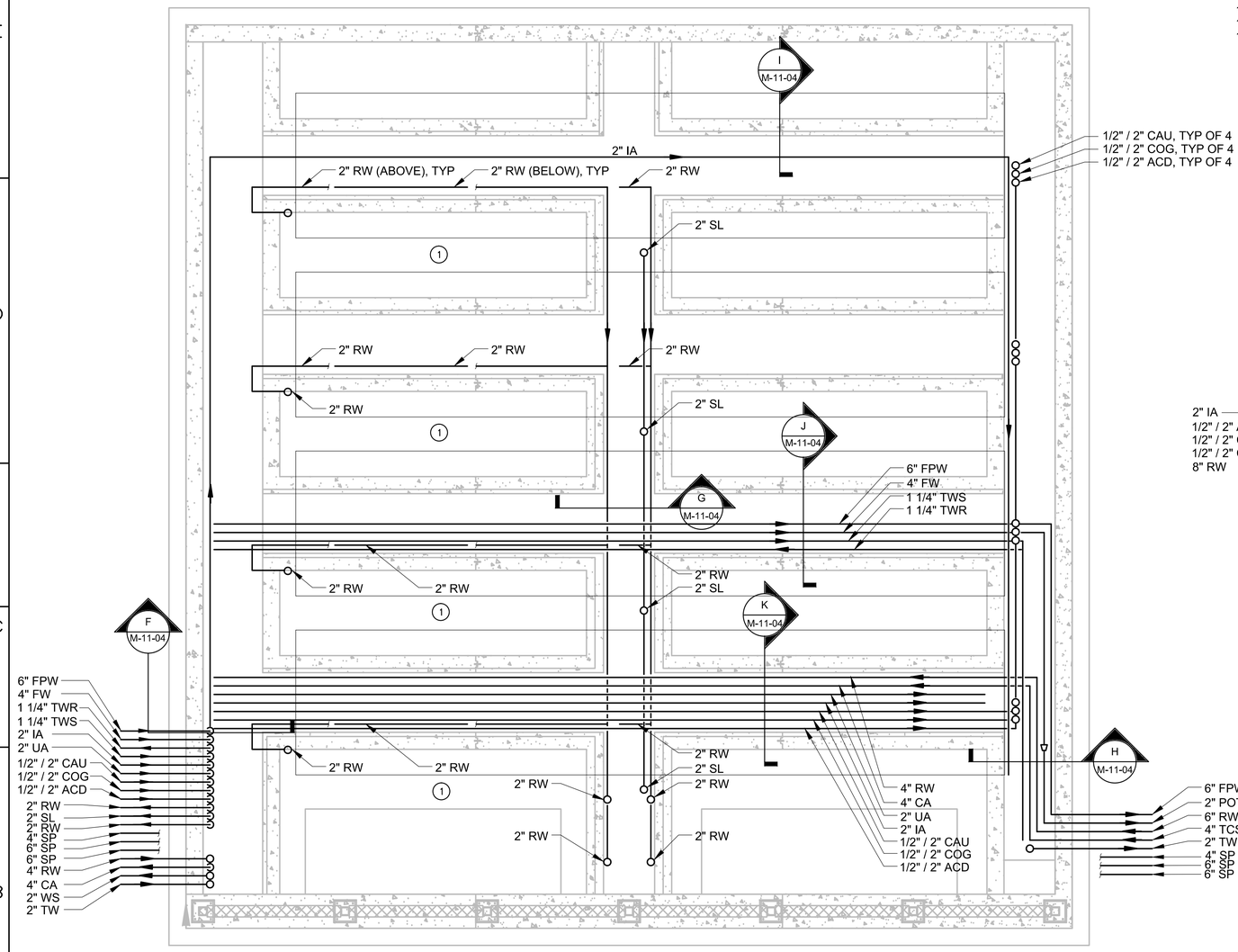

TRENCH PIPING SCHEMATIC

1/4" = 1'-0"

LEGEND:

(7) REFERENCE ITEM NUMBER E□UIPMENT SCHEDULE ON SHEET M-11-05.

NOTES:

1. PIPE SUPPORTS NOT SHOWN. CONTRACTOR TO SUPPORT PIPES IN ACCORDANCE WITH SPEC. 40 05 15.
2. E□UIPMENT TAGS SHOWN ARE UNI□UELY IDENTIFIED WITH THE ADDITION OF THE LOCATION ID CODE OF "RTP01", BEFORE THE NUMERIC CODE.
3. FOR PIPE ID AND ABBREVIATION SCHEDULE, SEE C-00-12.

0 4 8 2

SCALE: 1/4"=1'-0"

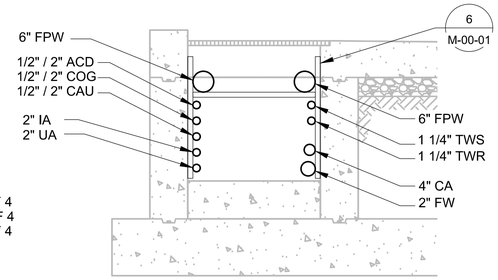

F SECTION
1/2"=1'-0"
M-11-04

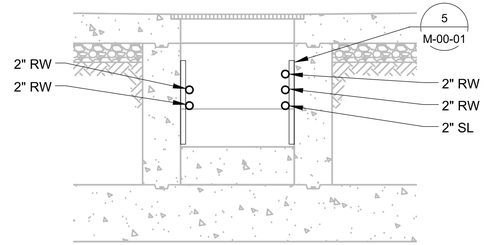

G SECTION
1/2"=1'-0"
M-11-04

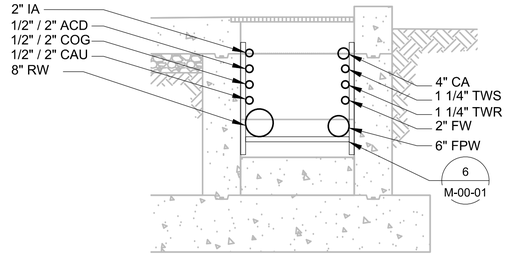

H SECTION
1/2"=1'-0"
M-11-04

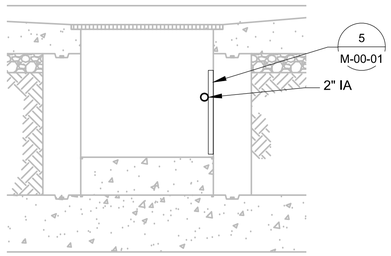

I SECTION
1/2"=1'-0"
M-11-04

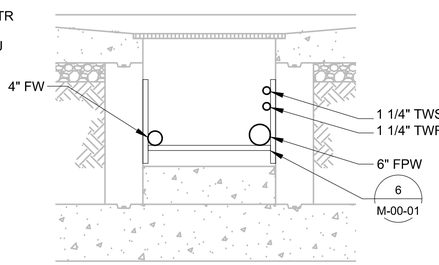

J SECTION
1/2"=1'-0"
M-11-04

0 2 4 6

SCALE: 1/2"=1'-0"

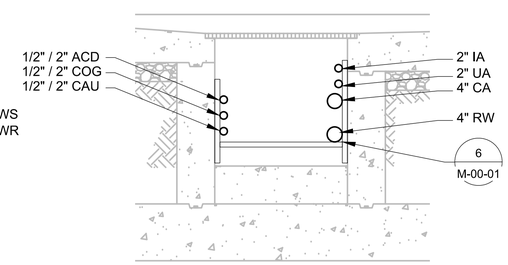

K SECTION
1/2"=1'-0"
M-11-04

- FINAL DESIGN -
FOR AGENCY APPROVAL ONLY

REGISTERED PROFESSIONAL ENGINEER
BENJAMIN J. WUERL
C 67811
EXP 6/30/17
STATE OF CALIFORNIA

ETIC ENGINEERING

ARCADIS

NO.	DATE	DESCRIPTION	GM/SPEC	DWN	CHKD	SUPV	APVD BY
1	11/18/15	FINAL DESIGN		AJW	KLD	BW	RAO
0	09/08/14	PRE-FINAL □90%□ DESIGN		DS	WF	JP	CH

REVISIONS

APPROVED BY	
RAO	SO
	SUPV
	DSGN
	DWN
	CHKD
	OK
	DATE
	SCALES

TOPOCK GROUNDWATER REMEDIATION PROJECT

INFLUENT TANK FARM SECTIONS AND DETAILS 3

GAS TRANSMISSION & DISTRIBUTION
PACIFIC GAS AND ELECTRIC COMPANY
SAN FRANCISCO, CALIFORNIA

MICROFILM	
BILL OF MATL	
DWG LIST	
SUPSDS	
SUPSD BY	
SHEET NO. of	SHEETS
M-11-04	REV 1

N1808

11/02/2015, 11:20, G:\Graphics\ART\TOPOCK-01\Submittal_100%\DWGs\M-Mechanical\M-11-04.dwg, Tab: M-11-04

EQUIPMENT SCHEDULE						
ITEM	PIPE SIZE	MATERIAL	PROCESS FLOW	PIPE ID	DESCRIPTION	ID TAG
1		CS	REMEDY WASTEWATER	15	INFLUENT TANK	TNK-*1101 TNK-*1102 TNK-*1103 TNK-*1104
2	6"	CS	REMEDY WASTEWATER	15	RECIRCULATION PUMP	PMP-*1101 PMP-*1102 PMP-*1103 PMP-*1104
3	2"	CS	WASTE STREAM	38	INFLUENT TANK SUMP PUMP	PMP-*1105
4			TEMPERED WATER	46/47	EMERGENCY EYEWASH AND SHOWER	
5	2"	CS	REMEDY WASTEWATER	15	FILTER FEED PUMP	PMP-*1210 PMP-*1220 PMP-*1230 PMP-*1240
6	2"	CS	SLURRY	50	SOLIDS PUMP	PMP-*1201
7			SEAL WATER		SEAL WATER PACKAGED SYSTEM	
8	6"	CPVC	REMEDY WASTEWATER	15	GLOBE VALVE	FV-*1117
9	2"	CPVC	REMEDY WASTEWATER	15	BUTTERFLY VALVE	FV-*1111 FV-*1112
10	2"	CPVC	ACID	43	BALL VALVE	FV-*1114
11	2"	CPVC	CAUSTIC	45	BALL VALVE	FV-*1113
12	2"	CPVC	COAGULANT	44	BALL VALVE	FV-*1115
13	6"	PVC	REMEDY WASTEWATER	15	EDUCTOR	EDUCTOR-*1111 EDUCTOR-*1112
14	2"	CPVC	REMEDY WASTEWATER	15	BALL VALVE	V-*1240A V-*1240C V-*1220A V-*1220C
15	2"	CPVC	REMEDY WASTEWATER	15	GATE VALVE	V-*1262A V-*1262B V-*1264C V-*1264D
16	2"	CPVC	REMEDY WASTEWATER	15	CHECK VALVE	V-*1240B V-*1220B
17	3/4"	CPVC	REMEDY WASTEWATER	15	BALL VALVE	SP-*1240D SP-*1220D
18	2"	CPVC	WASTE STREAM	38	BALL VALVE	V-*1105A V-*1105B V-*1105C
19	2"	CPVC	REMEDY WASTEWATER	15	PRESSURE GAUGE	PI-*1261 PI-*1262 PI-*1263 PI-*1264 PI-*1164 PI-*1163 PI-*1162 PI-*1161
20	2"	CPVC	WASTE STREAM	38	PRESSURE GAUGE	PI-*1165
21	2"	CPVC	REMEDY WASTEWATER	15	TURBIDITY SENSOR	AE-*1189 AE-*1182
22	2"	Teflon	REMEDY WASTEWATER	15	MAGNETIC FLOW METER	FE-*1171 FE-*1273 FE-*1272
23	2"	Teflon	WASTE STREAM	38	MAGNETIC FLOW METER	FE-*1181
24	6"	CPVC	REMEDY WASTEWATER	15	PH SENSOR	AE-*1181A
25	6"	CPVC	REMEDY WASTEWATER	15	CONDUCTIVITY SENSOR	AE-*1181B
26	6"	CPVC	REMEDY WASTEWATER	15	BUTTERFLY VALVE	V-*1101F

- FINAL DESIGN -
FOR AGENCY
APPROVAL ONLY

REGISTERED PROFESSIONAL ENGINEER
BENJAMIN J. WUESTL
C 67811
EXP 6/30/17
STATE OF CALIFORNIA

ETIC ENGINEERING

ARCADIS

N1808

NO.	DATE	DESCRIPTION	GM/SPEC	DWN	CHKD	SUPV	APVD BY
REVISIONS							
0	11/18/15	FINAL DESIGN	AJW	KLD	BW	RAO	

APPROVED BY	
RAO	

SO
SUPV
DSGN
DWN
CHKD
OK
DATE
SCALES

TOPOCK GROUNDWATER REMEDIATION PROJECT

INFLUENT TANK FARM MECHANICAL SCHEDULE

GAS TRANSMISSION & DISTRIBUTION
PACIFIC GAS AND ELECTRIC COMPANY
SAN FRANCISCO, CALIFORNIA

MICROFILM
BILL OF MATL
DWG LIST
SUPSDS
SUPSD BY
SHEET NO. M-11-05 of SHEETS
REV 0

11/02/2015, 11:22, G:\Graphics\ARITOPOCK-01\Submittal_100%\DWGs\M-Mechanical\M-11-05.dwg, Tab: M-11-05

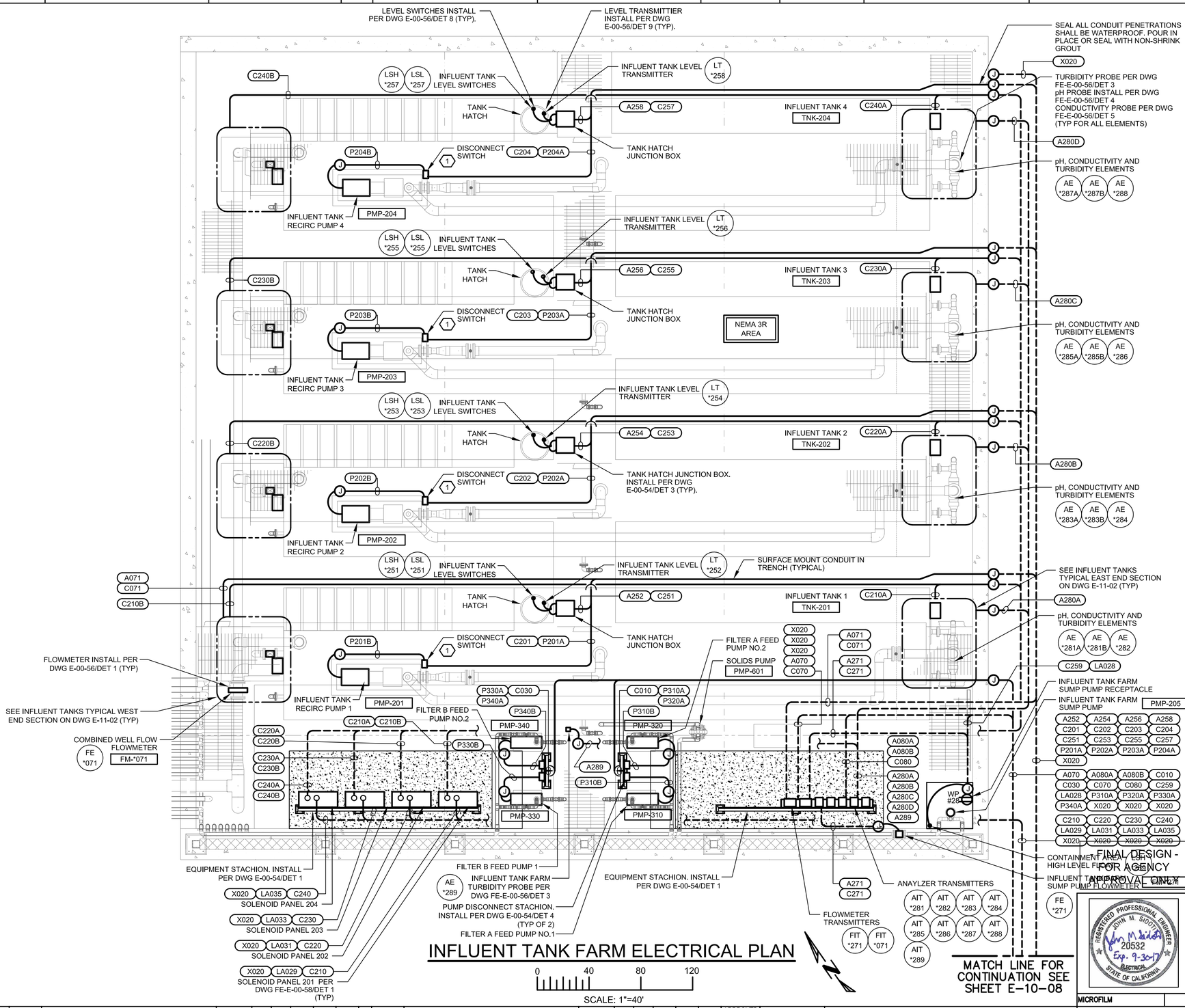

INFLUENT TANK FARM ELECTRICAL PLAN

0 40 80 120

SCALE: 1"=40'

DRAWING REFERENCED NOTES:

1. SECURE PUMP DISCONNECT SWITCH TO PUMP BASE WITH STAINLESS STEEL UNISTRUT. MOUNT DISCONNECT SWITCH AT 18". TYPICAL OF 4.
2. RUN AIR LINES AND CONTROL CABLES (4 # 14 CABLE) FROM SOLENOID PANEL TO EACH PNEUMATIC VALVE PER P&ID.

ELECTRICAL PLAN NOTES:

1. SEE ELECTRICAL PLAN NOTES ON DRAWING E-00-02.

FRISCH ENGINEERING, INC.
CONSULTING ELECTRICAL ENGINEERS
13405 FOLSOM BLVD, UNIT 600
FOLSOM, CA 95630
PH 916 353 1025
WWW.FRISCHENGINEERING.COM

ARCADIS

NO.	DATE	DESCRIPTION	GM/SPEC	DWN	CHKD	SUPV	APVD BY
1	11/18/15	FINAL DESIGN		MBY	TPF	JMS	RAO
0	9/8/14	PRE-FINAL (90%) DESIGN		MBY		TPF	

REVISIONS

APPROVED BY		
RAO	SO	
	SUPV	JMS
	DSGN	MBY
	DWN	MBY
	CHKD	TPF
	OK JMS	
	DATE	
	SCALES	N/A

TOPOCK GROUNDWATER REMEDIATION PROJECT
INFLUENT TANK FARM ELECTRICAL PLAN
GAS TRANSMISSION & DISTRIBUTION
PACIFIC GAS AND ELECTRIC COMPANY
SAN FRANCISCO, CALIFORNIA

MICROFILM	
BILL OF MATL	
DWG LIST	
SUPSDS	
SUPSD BY	
SHEET NO. of SHEETS	
E-11-01	REV 0

PLOT DATE: Nov 04, 2015 PLOT TIME: 3:19:39pm
FILENAME: FE-E-xxx-1101AD.dwg

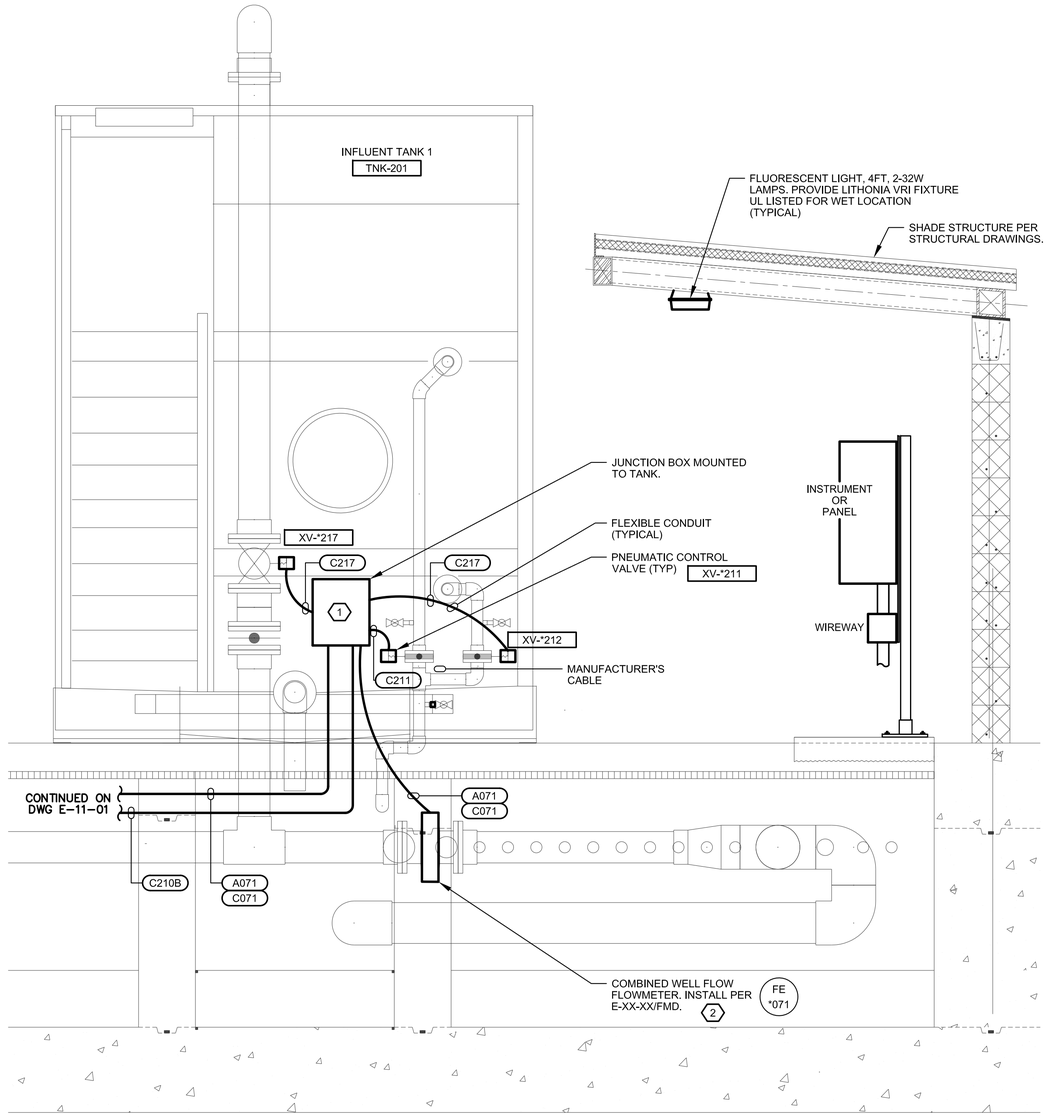

INFLUENT TANK 1 WEST END SECTION

SCALE: 3/4" = 1'
(SIMILAR FOR ALL INFLUENT TANKS)

DRAWING REFERENCED NOTES:

NOTES: 1 14"W X 12"H X 6"D, NEMA 4X STAINLESS STEEL JUNCTION/SPLICE BOX. JUNCTION BOX SHALL BE HOFFMAN CHNFSS OR EQUAL. USE ALL STAINLESS STEEL MOUNTING HARDWARE.

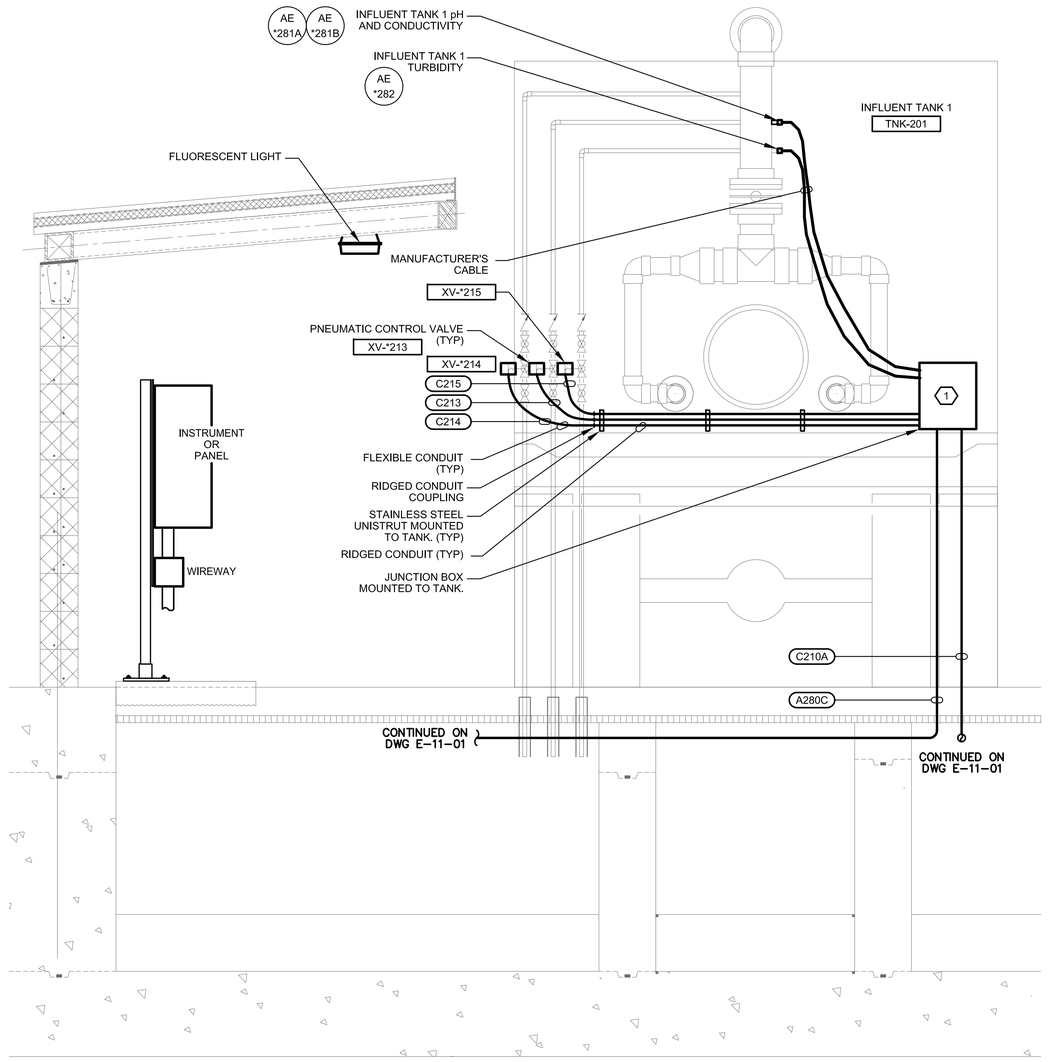

INFLUENT TANK 1 EAST END SECTION

SCALE: 3/4" = 1'
(SIMILAR FOR ALL INFLUENT TANKS)

DRAWING REFERENCED NOTES:

NOTES: 1 14"W X 12"H X 6"D, NEMA 4X STAINLESS STEEL JUNCTION/SPLICE BOX. JUNCTION BOX SHALL BE HOFFMAN CHNFSS OR EQUAL. USE ALL STAINLESS STEEL MOUNTING HARDWARE.

- FINAL DESIGN - FOR AGENCY APPROVAL ONLY

REGISTERED PROFESSIONAL ENGINEER JOHN M. SIOCHI 20532 Exp. 9-30-17 ELECTRICAL STATE OF CALIFORNIA

FRISCH ENGINEERING, INC.
CONSULTING ELECTRICAL ENGINEERS
13405 FOLSOM BLVD, UNIT 600
FOLSOM, CA 95630
PH 916 353 1025
WWW.FRISCHENGINEERING.COM

ARCADIS

NO.	DATE	DESCRIPTION	GM/SPEC	DWN	CHKD	SUPV	APVD BY
1	11/18/15	FINAL DESIGN		MBY	TPF	JMS	RAO
0	9/8/14	PRE-FINAL (90%) DESIGN		MBY			TPF

REVISIONS

APPROVED BY: RAO

SO	
SUPV	JMS
DSGN	MBY
DWN	MBY
CHKD	TPF
OK	JMS
DATE	
SCALES	N/A

TOPOCK GROUNDWATER REMEDIATION PROJECT
INFLUENT TANK 1 SECTIONS ELECTRICAL PLAN
GAS TRANSMISSION & DISTRIBUTION
PACIFIC GAS AND ELECTRIC COMPANY
SAN FRANCISCO, CALIFORNIA

MICROFILM
BILL OF MATL
DWG LIST
SUPSDS
SUPSD BY
SHEET NO. E-11-02 of SHEETS
REV 0

PLOT DATE: Nov 04, 2015 PLOT TIME: 3:19:39pm
FILENAME: FE-E-xxx-1101AD.dwg

N1808

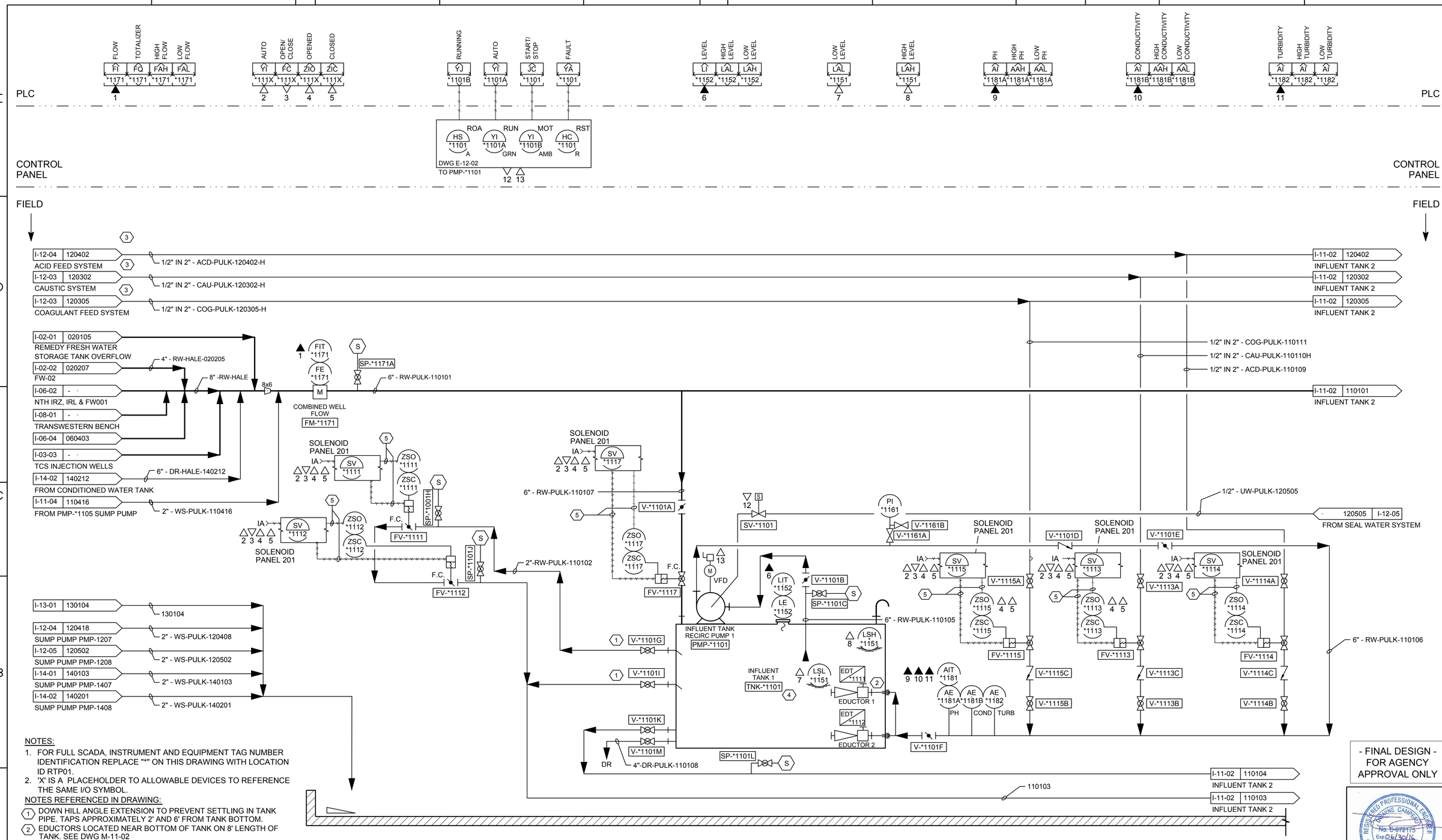

NOTES:

1. FOR FULL SCADA, INSTRUMENT AND EQUIPMENT TAG NUMBER IDENTIFICATION REPLACE "*" ON THIS DRAWING WITH LOCATION ID RTP01.
2. 'X' IS A PLACEHOLDER TO ALLOWABLE DEVICES TO REFERENCE THE SAME I/O SYMBOL.

NOTES REFERENCED IN DRAWING:

(1) DOWN HILL ANGLE EXTENSION TO PREVENT SETTLING IN TANK PIPE. TAPS APPROXIMATELY 2' AND 6' FROM TANK BOTTOM.
(2) EDUCTORS LOCATED NEAR BOTTOM OF TANK ON 8' LENGTH OF TANK. SEE DWG M-11-02
(3) DOUBLE CONTAINED PIPE. 1/2" INSIDE 2".
(4) SEE SPECIFICATION SECTION 33 16 13.14 AND DRAWING M-11-02.
(5) AIR TUBING AND CONTROL WIRES TO SOLENOID PANEL 201, TYPICAL FOR ALL PNEUMATIC VALVES.

- FINAL DESIGN - FOR AGENCY APPROVAL ONLY

REGISTERED PROFESSIONAL ENGINEER — JOANNE CAMPBELL — No. C 072175 — Exp 06/30/16 — CIVIL — STATE OF CALIFORNIA

ETIC ENGINEERING

ARCADIS

NO.	DATE	DESCRIPTION	GM/SPEC	DWN	CHKD	SUPV	APVD	BY
2	11/18/15	FINAL DESIGN		AJW	JPB	DAC	RAO	
1	09/08/14	PRE-FINAL (90%) DESIGN		MBY			TPF	
0	04/05/13	INTERMEDIATE (60%) DESIGN		MBY			TPF	

REVISIONS

APPROVED BY	RAO
SO	
SUPV	
DSGN	
DWN	
CHKD	
OK	
DATE	
SCALES	

TOPOCK GROUNDWATER REMEDIATION PROJECT

P&ID INFLUENT TANK 1

GAS TRANSMISSION & DISTRIBUTION
PACIFIC GAS AND ELECTRIC COMPANY
SAN FRANCISCO, CALIFORNIA

MICROFILM	
BILL OF MATL	
DWG LIST	
SUPSDS	
SUPSD BY	
SHEET NO.	of SHEETS
I-11-01	REV 2

N1808

11/03/2015, 17:23, G:\Graphics\ARITOPOCK-01\Submittal_100%\DWGs\I-Instrumentation\I-11-01.dwg, Tab: I-11-01

PLC

CONTROL PANEL

FIELD

AUTO YI *112XA 1
OPEN/CLOSE FC *112X 2
OPENED ZIO *112X 3
CLOSED ZIC *112X 4
LEVEL LI *1154 5
HIGH LEVEL LAH *1154
LOW LEVEL LAL *1154
LOW LEVEL LAL *1153 6
HIGH LEVEL LAH *1153 7
PH AI *1183A 8
HIGH PH AAH *1183A
LOW PH AAL *1183A
CONDUCTIVITY AI *1183B 9
HIGH CONDUCTIVITY AAH *1183B
LOW CONDUCTIVITY AAL *1183B
TURBIDITY AI *1184 10
HIGH TURBIDITY AAH *1184
LOW TURBIDITY AAL *1184
RUNNING YI *1102
AUTO YI *1102A
START/STOP JC *1102S
FAULT YA *1102F

HS *1102 A — ROA
YI *1102A GRN — RUN
YI *1102B AMB — MOT
HC *1102 R — RST
DWG E-02-02
TO PMP-*1102
11 12

I-11-01 120402 — 1/2" IN 2" - ACD-PULK-120402 — I-11-03 120402 INFLUENT TANK 3
ACID FEED SYSTEM
I-11-01 120302 — 1/2" IN 2" - CAU-PULK-120302-H — I-11-03 120302 INFLUENT TANK 3
CAUSTIC SYSTEM
I-11-01 120305 — 1/2" IN 2" - COG-PULK-120305 — I-11-03 120305 INFLUENT TANK 3
COAGULANT FEED SYSTEM
1/2" IN 2" - COG-PULK-110211
1/2" IN 2" - CAU-PULK-110210H
1/2" IN 2" - ACD-PULK-110209
I-11-01 110101 — 6" -RW-PULK-110101 — I-11-03 110101 INFLUENT TANK 3
INFLUENT TANK 1

SOLENOID PANEL 202 IA 1 2 3 4 — SV *1121 — ZSO *1121 — ZSC *1121 — S — SP-*1102H — F.C. — FV-*1121
SOLENOID PANEL 202 IA 1 2 3 4 — SV *1122 — ZSO *1122 — ZSC *1122 — S — SP-*1102J — F.C. — FV-*1122
I-11-01 110103 — 2" - RW-PULK-110103 — INFLUENT TANK 1
I-11-01 110104 — 2" - SL-PULK-110104 — INFLUENT TANK 1
2"-RW-PULK-110202

SOLENOID PANEL 202 IA 1 2 3 4 — SV *1127 — ZSO *1127 — ZSC *1127 — F.C. — FV-*1127
6" - RW-PULK-110207
V-*1102A
SV-*1102
PI *1162 — V-*1162B — V-*1162A
L M 12 VFD
LIT *1154 LE *1154 — V-*1102B — S — SP-*1102C
6" - RW-PULK-110205
INFLUENT TANK RECIRC PUMP 2 PMP-*1102
LSH *1153 7
INFLUENT TANK 2 TNK-*1102 4
LSL *1153 6
EDT *1121 — EDUCTOR 1 — 2
EDT *1122 — EDUCTOR 2
AIT *1183 8 9 10
AE *1183A PH — AE *1183B COND — AE *1184 TURB
V-*1102F

V-*1102G
V-*1102I
V-*1102K
V-*1102M
S — SP-*1102L
DR — 4"-DR-PULK-110208
2" - SL-PULK-110104

SOLENOID PANEL 202 IA 1 2 3 4 — SV *1125 — ZSO *1125 — ZSC *1125 — V-*1102D — V-*1125A — FV-*1125 — V-*1125C — V-*1125B
SOLENOID PANEL 202 IA 1 2 3 4 — SV *1123 — ZSO *1123 — ZSC *1123 — V-*1102E — V-*1123A — FV-*1123 — V-*1123C — V-*1123B
SOLENOID PANEL 202 IA 1 2 3 4 — SV *1124 — ZSO *1124 — ZSC *1124 3 4 — V-*1124A — FV-*1124 — V-*1124C — V-*1124B
1/2" - UW-PULK-120505
120505 I-12-05 SEAL WATER SYSTEM
6" - RW-PULK-110206
I-11-03 110104 SLURRY TO INFLUENT TANK 3
I-11-03 110103 INFLUENT TANK 3

NOTES:

1. FOR FULL SCADA, INSTRUMENT AND EQUIPMENT TAG NUMBER IDENTIFICATION REPLACE "*" ON THIS DRAWING WITH LOCATION ID RTP01.
2. 'X' IS A PLACEHOLDER TO ALLOWABLE DEVICES TO REFERENCE THE SAME I/O SYMBOL.

NOTES REFERENCED IN DRAWING:

1. DOWN HILL ANGLE EXTENSION TO PREVENT SETTLING IN TANK PIPE. TAPS APPROXIMATELY 2' AND 6' FROM TANK BOTTOM.
2. EDUCTORS LOCATED NEAR BOTTOM OF TANK ON 8' LENGTH OF TANK. SEE DWG M-11-02
3. DOUBLE CONTAINED PIPE. 1/2" INSIDE 2".
4. SEE SPECIFICATION SECTION 33 16 13.14 AND DRAWING M-11-02.
5. AIR TUBING AND CONTROL WIRES TO SOLENOID PANEL 201, TYPICAL FOR ALL PNEUMATIC VALVES.

- FINAL DESIGN - FOR AGENCY APPROVAL ONLY

REGISTERED PROFESSIONAL ENGINEER DIANNE CAMPBELL No. C 072175 Exp 06/30/16 CIVIL STATE OF CALIFORNIA

ETIC ENGINEERING

ARCADIS

NO.	DATE	DESCRIPTION	GM/SPEC	DWN	CHKD	SUPV	APVD BY
2	11/18/15	FINAL DESIGN		AJW	JPB	DAC	RAO
1	9/8/14	PRE-FINAL (90%) DESIGN		MBY			TPF
0	4/5/13	INTERMEDIATE (60%) DESIGN		MBY			TPF

REVISIONS

APPROVED BY: RAO

SO | SUPV | DSGN | DWN | CHKD | OK | DATE | SCALES

TOPOCK GROUNDWATER REMEDIATION PROJECT

P&ID INFLUENT TANK 2

GAS TRANSMISSION & DISTRIBUTION
PACIFIC GAS AND ELECTRIC COMPANY
SAN FRANCISCO, CALIFORNIA

MICROFILM | BILL OF MATL | DWG LIST | SUPSDS | SUPSD BY

SHEET NO. I-11-02 of SHEETS | REV 2

11/03/2015, 17:23, G:\Graphics\AR\TOPOCK-01\Submittal_100%\DWGs\I-Instrumentation\I-11-02.dwg, Tab: I-11-02

N1808

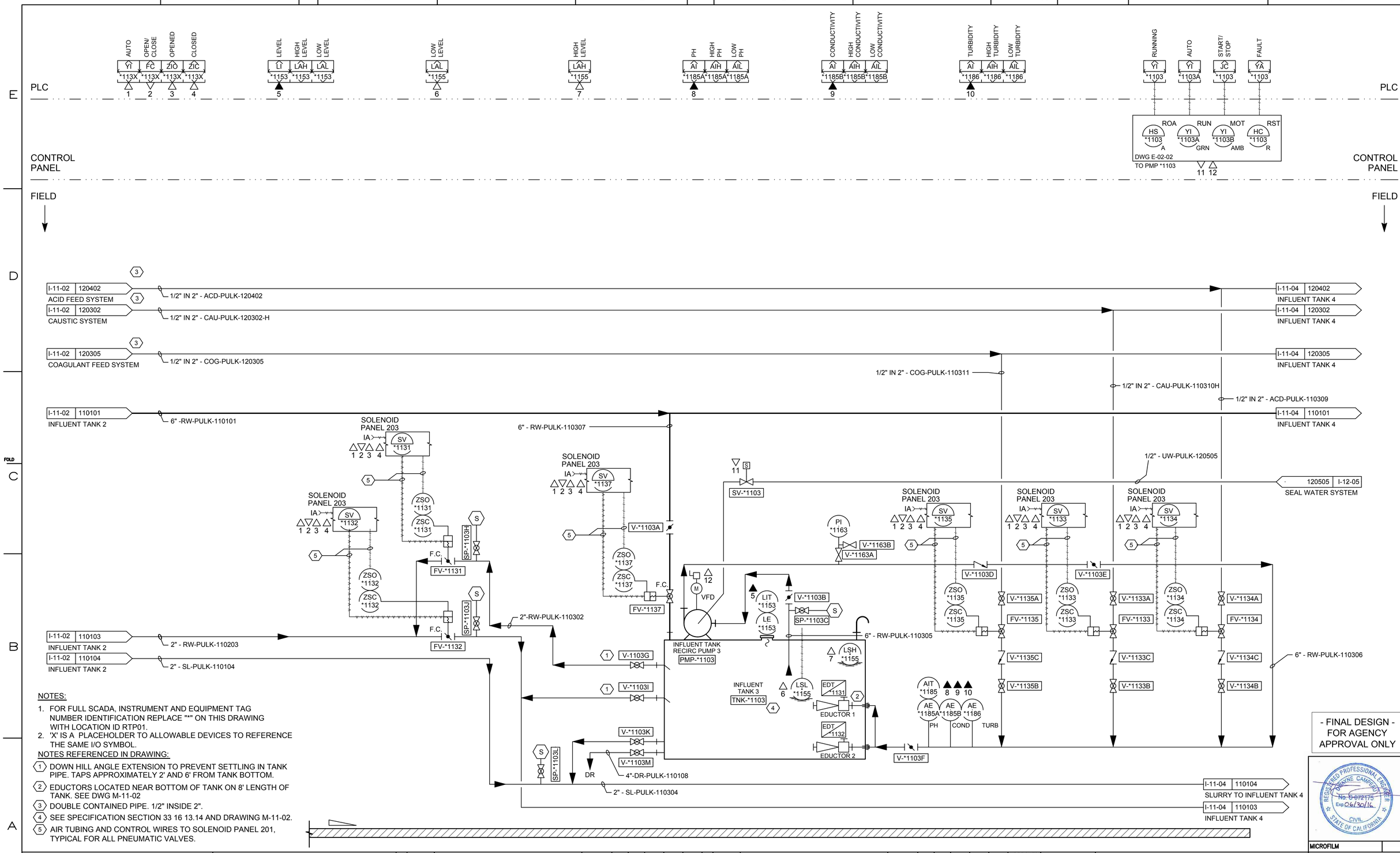

NOTES:

1. FOR FULL SCADA, INSTRUMENT AND EQUIPMENT TAG NUMBER IDENTIFICATION REPLACE "*" ON THIS DRAWING WITH LOCATION ID RTP01.
2. 'X' IS A PLACEHOLDER TO ALLOWABLE DEVICES TO REFERENCE THE SAME I/O SYMBOL.

NOTES REFERENCED IN DRAWING:

1. DOWN HILL ANGLE EXTENSION TO PREVENT SETTLING IN TANK PIPE. TAPS APPROXIMATELY 2' AND 6' FROM TANK BOTTOM.
2. EDUCTORS LOCATED NEAR BOTTOM OF TANK ON 8' LENGTH OF TANK. SEE DWG M-11-02
3. DOUBLE CONTAINED PIPE. 1/2" INSIDE 2".
4. SEE SPECIFICATION SECTION 33 16 13.14 AND DRAWING M-11-02.
5. AIR TUBING AND CONTROL WIRES TO SOLENOID PANEL 201, TYPICAL FOR ALL PNEUMATIC VALVES.

- FINAL DESIGN - FOR AGENCY APPROVAL ONLY

REGISTERED PROFESSIONAL ENGINEER DWAYNE CAMPBELL No. C 67275 Exp 06/30/16 CIVIL STATE OF CALIFORNIA

ETIC ENGINEERING

ARCADIS

NO.	DATE	DESCRIPTION	GM/SPEC	DWN	CHKD	SUPV	APVD	BY
2	11/18/15	FINAL DESIGN		AJW	JPB	DAC	RAO	
1	9/8/14	PRE-FINAL (90%) DESIGN		MBY			TPF	
0	4/5/13	INTERMEDIATE (60%) DESIGN		MBY			TPF	

REVISIONS

APPROVED BY	
RAO	SO
	SUPV
	DSGN
	DWN
	CHKD
	OK
	DATE
	SCALES

TOPOCK GROUNDWATER REMEDIATION PROJECT

P&ID
INFLUENT TANK 3

GAS TRANSMISSION & DISTRIBUTION
PACIFIC GAS AND ELECTRIC COMPANY
SAN FRANCISCO, CALIFORNIA

MICROFILM	
BILL OF MATL	
DWG LIST	
SUPSDS	
SUPSD BY	
SHEET NO.	of SHEETS
I-11-03	REV 2

N1808

11/03/2015, 17:24, G:\Graphics\ART\TOPOCK-011\Submittal_100%\DWGs\I-Instrumentation\I-11-03.dwg, Tab: I-11-03

PLC

CONTROL PANEL

FIELD

AUTO, OPEN/CLOSE, OPENED, CLOSED — YI, FC, ZIO, ZIC — *1114X — 1, 2, 3, 4

LEVEL, HIGH LEVEL, LOW LEVEL — LI, LAH, LAL — *1158 — 5

LOW LEVEL — LAL — *1157 — 6

HIGH LEVEL — LAH — *115X — 7

PH, HIGH PH, LOW PH — AI, AIH, AIL — *1187A — 8

CONDUCTIVITY, HIGH CONDUCTIVITY, LOW CONDUCTIVITY — AI, AIH, AIL — *1187B — 9

TURBIDITY, HIGH TURBIDITY, LOW TURBIDITY — AI, AIH, AIL — *118X — 10

FLOW, TOTALIZER, HIGH FLOW, LOW FLOW — FI, FQ, FAH, FAL — *1171 — 11

RUNNING, AUTO, START/STOP, FAULT — YI, YI, JC, YA — *1104

ROA — HS *1104 A

RUN — YI *1104A GRN

MOT — YI *1104B AMB

RST — HC *1104 R

DWG E-02-02
TO PMP-*1104 — 12, 13

I-11-03 | 120402 — ACID FEED SYSTEM — 1/2" IN 2" - ACD-PULK-120402

I-11-03 | 120302 — CAUSTIC SYSTEM — 1/2" IN 2" - CAU-PULK-120302-H

I-11-03 | 120303 — COAGULANT FEED SYSTEM — 1/2" IN 2" - COG-PULK-120305-H

I-11-03 | 110101 — INFLUENT TANK 3 — 6" -RW-PULK-110101

1/2" IN 2" - COG-PULK

1/2" IN 2" - CAU-PULK

1/2" IN 2" - ACD-PULK

120505 | I-12-05 — SEAL WATER SYSTEM — 1/2" - UW-PULK-120505

SOLENOID PANEL 204 — IA — SV *1141 — 1 2 3 4

6" - RW-PULK-110407

SOLENOID PANEL 204 — IA — SV *1147 — 1 2 3 4

SOLENOID PANEL 204 — IA — SV *1142 — 1 2 3 4

SOLENOID PANEL 204 — IA — SV *1144 — 1 2 3 4

SOLENOID PANEL 204 — IA — SV *1145 — 1 2 3 4

SOLENOID PANEL 204 — IA — SV *1143 — 1 2 3 4

12 — S — SV-*1104

ZSO *1141, ZSC *1141 — F.C. — FV-*1141 — SP-*1104H

ZSO *1142, ZSC *1142 — F.C. — FV-*1142 — SP-*1104J

ZSO *1147, ZSC *1147 — F.C. — FV-*1147

V-*1104A

V-*1164A — PI *1164 — V-*1164B

ZSO *1144, ZSC *1144 — V-*1104E — 6" - RW-PULK-110406

ZSO *1145, ZSC *1145 — V-*1145A — FV-*1145 — V-*1145C — V-*1145B

ZSO *1143, ZSC *1143 — V-*1104D — V-*1143A — FV-*1143 — V-*1143C — V-*1143B

V-*1144A — FV-*1144 — V-*1144C — V-*1144B

AIT *1189, AE *1189 — TURB — V-*1189A

110413 | I-12-01 — FILTER FEED PUMPS - A SIDE — 2" - RW-PULK-110413

110414 | I-12-02 — FILTER FEED PUMPS - B SIDE — 2" - RW-PULK-110414

- | - — TCS WASTEWATER TANK DISCHARGE CONNECTION — 2" - RW-PULK-110403

2"-RW-PULK-110402

I-11-03 | 110103 — INFLUENT TANK 3 — 2" - RW-PULK-110303

110404 | I-12-05 — SLURRY TO LIQUID PHASE SEPARATORS — 2" - SL-PULK-110404

INFLUENT TANK RECIRC PUMP 4 — PMP-*1104 — VFD — M — 13

6" - RW-PULK-110405

LIT *1158, LE *1158 — V-*1104B — SP-*1104C — S

LSH *1157 — 7

INFLUENT TANK 4 — TNK-*1104 — LSL *1157 — 6

EDT *1141 — EDUCTOR 1

EDT *1142 — EDUCTOR 2

V-*1104F

PH — AE *1187A — AIT *1187 — 8 9 10

COND — AE *1187B

TURB — AE *1188

LSH *1159 — 7

TRUCK CONNECTION

6" - SL-PULK-110415

SP-*1104L

V-*1104K

V-*1104M

DR — 4"-DR-PULK-110108

2" - SL-PULK-110404

110104 | I-11-03 — INFLUENT TANK 3

1 V-*1104G

1 V-*1104I

COOLING TOWER BLOWDOWN LINE SUMP PUMP FLOW — FM-*1171

FIT *1181, FE *1181 — 11

2" - WS-PULK-110417

V-*1105C — M — TCS WASTEWATER TANK DISCHARGE CONNECTION

V-*1105B — I-11-01 | 110416 — INFLUENT TANK FARM

V-*1105A — 2" - WS-PULK-110416

PI *1165 — V-*1165A — V-*1165B

INFLUENT TANK FARM SUMP PUMP — PMP-*1105

NOTES:

1. FOR FULL SCADA, INSTRUMENT AND EQUIPMENT TAG NUMBER IDENTIFICATION REPLACE "*" ON THIS DRAWING WITH LOCATION ID RTP01.
2. 'X' IS A PLACEHOLDER TO ALLOWABLE DEVICES TO REFERENCE THE SAME I/O SYMBOL.

NOTES REFERENCED IN DRAWING:

1. DOWN HILL ANGLE EXTENSION TO PREVENT SETTLING IN TANK PIPE. TAPS APPROXIMATELY 2' AND 6' FROM TANK BOTTOM.
2. EDUCTORS LOCATED NEAR BOTTOM OF TANK ON 8' LENGTH OF TANK. SEE DWG M-11-02
3. DOUBLE CONTAINED PIPE. 1/2" INSIDE 2".
4. SEE SPECIFICATION SECTION 33 16 13.14 AND DRAWING M-11-02.
5. AIR TUBING AND CONTROL WIRES TO SOLENOID PANEL 201, TYPICAL FOR ALL PNEUMATIC VALVES.

- FINAL DESIGN - FOR AGENCY APPROVAL ONLY

REGISTERED PROFESSIONAL ENGINEER — DWAYNE CAMPBELL — No. E 072175 — Exp. 06/30/16 — CIVIL — STATE OF CALIFORNIA

ETIC ENGINEERING

ARCADIS

NO.	DATE	DESCRIPTION	GM/SPEC	DWN	CHKD	SUPV	APVD BY
2	11/18/15	FINAL DESIGN		AJW	JPB	DAC	RAO
1	9/8/14	PRE-FINAL (90%) DESIGN		MBY			TPF
0	4/5/13	INTERMEDIATE (60%) DESIGN		MBY			TPF

REVISIONS

APPROVED BY	
RAO	SO
	SUPV
	DSGN
	DWN
	CHKD
	OK
	DATE
	SCALES

TOPOCK GROUNDWATER REMEDIATION PROJECT

P&ID
INFLUENT TANK 4

GAS TRANSMISSION & DISTRIBUTION
PACIFIC GAS AND ELECTRIC COMPANY
SAN FRANCISCO, CALIFORNIA

MICROFILM	
BILL OF MATL	
DWG LIST	
SUPSDS	
SUPSD BY	
SHEET NO. of	SHEETS
I-11-04	REV 2

11/03/2015, 17:24, G:\Graphics\AR\TOPOCK-01\Submittal_100%\DWGs\I-Instrumentation\I-11-04.dwg, Tab: I-11-04

N1808

REMEDY FRESH WATER STORAGE TANK OVERFLOW

G-06-01 · FROM IRZ CARBON AMENDMENT AREA AND FW-001 WELLS

G-03-01 · TCS INJECTION WELLS

G-00-08 · FW-002

G-12-01 · CONDITIONED WATER TANK

REMEDY A SIDE

WASTE WATER TANK DISCHARGE CONNECTION

LEGEND:

1 REFERENCE STREAM NUMBER ON SHEET G-12-02

PMP-*1101 RECIRC. PUMP #1

PMP-*1102 RECIRC. PUMP #2

PMP-*1103 RECIRC. PUMP #3

PMP-*1104 RECIRC. PUMP #4

TNK-*1101 INFLUENT TANK #1

TNK-*1102 INFLUENT TANK #2

TNK-*1103 INFLUENT TANK #3

TNK-*1104 INFLUENT TANK #4

FIL-*1211 CARTRIDGE FILTER COARSE 1A

FIL-*1212 CARTRIDGE FILTER FINE 1B

FIL-*1221 CARTRIDGE FILTER COARSE 2A

FIL-*1222 CARTRIDGE FILTER FINE 2B

FILTER PACKAGE 1

PMP-*1210 FILTER FEED PUMP 1

PMP-*1220 FILTER FEED PUMP 2

TNK-*1401 CONDITIONED WATER STORAGE TANK #1

TNK-*1402 CONDITIONED WATER STORAGE TANK #2

PMP-*1405/1406 CONDITIONED WATER TRANSFER PUMP

WASTE WATER TANK DISCHARGE CONNECTION

G-12-01 · FROM SUMP PUMP PMP-*1408

PMP-*1105 INFLUENT TANK SUMP PUMP

WASTE WATER TANK DISCHARGE CONNECTION

WASTEWATER TANK CONNECTION

PMP-*1407 CONDITIONED WATER TANK SUMP PUMP

NTH IRZ WELLS

G-06-01 · TNK-*0620 CONDITIONED WATER FRAC TANK

TCS TRUCK FILL STATION

TO GRIT TANK

G-12-01 · TO INFLUENT TANKS SUMP (THIS DRAWING)

PMP-*1201 SOLIDS PUMP

25% CAUSTIC

LPS-*1211/1212 LIQUID PHASE SEPARATOR 1 & 2

TNK-*1212 CAUSTIC STORAGE TANK

PMP-*1208 LIQUID PHASE SEPARATOR SUMP PUMP

PMP-*1403 TRUCK FILL PUMP 1

PMP-*1408 DECON PAD SUMP PUMP

DECONTAMINATION PAD

FRESHWATER B SIDE

FIL-*1231 CARTRIDGE FILTER COARSE 1A

FIL-*1232 CARTRIDGE FILTER FINE 1B

FIL-*1241 CARTRIDGE FILTER COARSE 2A

FIL-*1242 CARTRIDGE FILTER FINE 2B

FILTER PACKAGE 2

PMP-*1230 FILTER FEED PUMP 1

PMP-*1240 FILTER FEED PUMP 2

TNK-*1410 CONDITIONED WATER STORAGE TANK

PMP-*1211/1212 CAUSTIC FEED PUMP 1 & 2

COAGULANT

PMP-*1242 POLYMER PUMP

DEWATERING AID

19% HCL

PMP-*1221/1222 COAGULANT FEED PUMP 1 & 2

PMP-*1231/1232 ACID FEED PUMP 1 AND 2

TNK-*1220 COAGULANT TANK

TNK-*1230 ACID TANK

TNK-*1244 DEWATERING AID FEED TANK (FUTURE)

PMP-*1245 DEWATERING AID FEED PUMP 1 (FUTURE)

G-12-01 · TO INFLUENT TANKS (THIS DRAWING)

FUTURE INSTALLATION

COOLING TOWER BASIN

PMP-*1207 REMEDY PRODUCED WATER CONDITIONING PLANT SUMP PUMP

LIMITS OF REMEDY BUILDING

- FINAL DESIGN - FOR AGENCY APPROVAL ONLY

REGISTERED PROFESSIONAL ENGINEER BENJAMIN J. WUERL C 67811 EXP 6/30/17 STATE OF CALIFORNIA

ETIC ENGINEERING

ARCADIS

NO.	DATE	DESCRIPTION	GM/SPEC	DWN	CHKD	SUPV	APVD	BY
3	11/18/15	FINAL DESIGN		AJW	JPB	BW	RAO	
2	9/8/14	PRE-FINAL (90%) DESIGN		MBY	CB	JP	CH	
1	4/5/13	INTERMEDIATE (60%) DESIGN		MBY	KM	JP	CH	
0	11/11/11	PRELIMINARY (30%) DESIGN		PC	JP	PT	CH	

REVISIONS

APPROVED BY: RAO

SO · SUPV · DSGN · DWN · CHKD · OK · DATE · SCALES

TOPOCK GROUNDWATER REMEDIATION PROJECT

PROCESS FLOW DIAGRAM REMEDY PRODUCED WATER CONDITIONING PLANT

GAS TRANSMISSION & DISTRIBUTION

PACIFIC GAS AND ELECTRIC COMPANY

SAN FRANCISCO, CALIFORNIA

MICROFILM · BILL OF MATL · DWG LIST · SUPSDS · SUPSD BY

SHEET NO. G-12-01 of SHEETS · REV 3

N1808

11/09/2015, 13:58, G:\Graphics\ART\TOPOCK-01\Submittal_100%\DWGs\G-General\G-12-01.dwg, Tab: G-12-01

Stream #		1	2	3	4	5	6	7	8	9	10	11	12	13
Waste Stream	Total Influent to Tanks	Influent Tank Farm, Influent	To Remedy A Side Filters	To Freshwater B Side Filters	To Cooling Tower Blowdown via TCS Wastewater Tank	To TCS Truck Fill Station	To *T720 tank (IRX Wells)	To Cooling Tower Basin (Note 1)	Liquid Phase Separator, Influent	Liquid Phase Separator, Liquid Return	25% Caustic to Influent Tank Farm	Coagulant to Influent Tank Farm	Acid (19% HCl) to Influent Tank Farm	Conditioned Water Storage Tank, Inlet
Design Flow (MG/Year)	**7.6**	7.6	3.9	2.9	0.78	0.0	6.8	0.0	0.08	0.076	0.001443	3.000061	0.001443	2.9
Design Flow (ac-ft/Year)	**23.4**				2.4		20.7							
TSS (mg/L)		40.6	60	10	60				2286	233				<5
Solids (lbs/year)		2580	973	123	389				1483	148				123
Solids (lbs/day)		7.1	2.7	0.3	4.4				4	0.4				0.3
Nominal Flow (MG/Year)	**5.5**	5.5	2.9	1.8	0.78	0.0	4.6	0.0	0.06	0.057	0.001443	0.000046	0.001443	1.8
Design Flow (ac-ft/Year)	**16.8**				2.4		14.2							
TSS (mg/L)		43.4	60	10	60				2466	247				<5
Solids (lbs/year)		1976	719	76	389				1182	118				76
Solids (lbs/day)		5.4	2.0	0.2	1.1				3	0.3				0.2
pH		2.01-7.4	7-7.4	7-7.4	2.01-7.4				7-7.4	7-7.4	14	3.5	1	6.5-8.5
Notes	1. The use of conditioned water as cooling tower makeup water is a future option.													

- FINAL DESIGN - FOR AGENCY APPROVAL ONLY

REGISTERED PROFESSIONAL ENGINEER BENJAMIN J. WUERL C 67811 EXP 6/30/17 STATE OF CALIFORNIA

ETIC ENGINEERING

ARCADIS

NO.	DATE	DESCRIPTION	GM/SPEC	DWN	CHKD	SUPV	APVD BY
3	11/18/15	FINAL DESIGN		AJW	JPB	BW	RAO
2	9/8/14	PRE-FINAL (90%) DESIGN		JP	CB	JP	CH
1	4/5/13	INTERMEDIATE (60%) DESIGN		RH	KM	JP	CH
0	11/18/11	PRELIMINARY (30%) DESIGN		CY	MG	JP	CH

REVISIONS

APPROVED BY	
	SO
RAO	SUPV
	DSGN
	DWN
	CHKD
	OK
	DATE
	SCALES

TOPOCK GROUNDWATER REMEDIATION PROJECT

REMEDY PRODUCED WATER MASS BALANCE

GAS TRANSMISSION & DISTRIBUTION

PACIFIC GAS AND ELECTRIC COMPANY
SAN FRANCISCO, CALIFORNIA

MICROFILM	
BILL OF MATL	
DWG LIST	
SUPSDS	
SUPSD BY	
SHEET NO.	of SHEETS
G-12-02	REV 3

N1808

11/04/2015, 12:19, G:\Graphics\AR\TOPOCK-01\Submittal_100%\DWGs\G-General\G-12-02.dwg, Tab: G-12-02

REFERENCE SYMBOLS

BUILDING SECTION INDICATOR

WALL SECTION INDICATOR

ENLARGED DETAIL INDICATOR

SECTION DETAIL INDICATOR

EXTERIOR ELEVATION INDICATOR

INTERIOR ELEVATION INDICATOR

MATCH LINE INDICATOR

DRAWING REVISION INDICATOR

COLUMN GRIDLINE INDICATOR

SPOT ELEVATION INDICATOR

DATUM INDICATOR OR WORK POINT

EQUIPMENT INDICATOR
FIXTURE INDICATOR
FURNITURE INDICATOR
GRAPHIC/SIGNAGE INDICATOR
MISCELLANEOUS INDICATORS

ROOM INDICATOR

FINISH INDICATOR

(DOOR) OPENING INDICATOR

CEILING HEIGHT INDICATOR

WINDOW INDICATOR

CEILING HEIGHT/MATERIAL/FINISH INDICATOR

WALL TYPE INDICATOR

(NON-RATED PARTITION)
(1-HOUR RATED PARTITION)
(2-HOUR RATED PARTITION)
(3-HOUR RATED PARTITION)
(4-HOUR RATED PARTITION)
SMOKE BARRIER
SMOKE PARTITION

KEYNOTE

PARTITIONS

PLAN SYMBOLS

MOUNTED TO WALL WITH BRACKET
IN WALL-MOUNTED CABINET

FIRE EXTINGUISHERS

EXISTING TO REMAIN (SHOWN SHADED)
EXISTING TO BE DEMOLISHED (SHOWN DASHED)
NEW

TYPE OF WORK

ABBREVIATIONS

ADDITIONAL ABBREVIATIONS ARE DEFINED IN LEGENDS THROUGHOUT THE DRAWING SET.

AC	ASPHALTIC CONCRETE, AIR CONDITIONING
ACC	ACCESSIBLE
ACP	ACOUSTICAL CEILING PANEL
ACST	ACOUSTICAL
AD	AREA DRAIN
ADDM	ADDENDUM
ADJ	ADJUSTABLE
AESS	ARCHITECTURALLY EXPOSED STRUCTURAL STEEL
AF	ACCESS FLOORING
AFF	ABOVE FINISHED FLOOR
AHU	AIR HANDLING UNIT
ALT	ALTERNATE
ALUM	ALUMINUM
ANOD	ANODIZED
APPROX.	APPROXIMATE
APT	APARTMENT
ARCH	ARCHITECT, ARCHITECTURAL
AUTO	AUTOMATIC
AV	AUDIO VISUAL
AWP	ACOUSTICAL WALL PANEL(S)
BB	BULLETIN BOARD
BD	BOARD
BLDG	BUILDING
BLKG	BLOCKING
BO	BOTTOM OF
BOT	BOTTOM
BRG	BEARING
BRZ	BRONZE
BSMT	BASEMENT
BUR	BUILT UP ROOFING
CAB	CABINET
CB	CATCH BASIN
CEM	CEMENT, CEMENTITIOUS
CG	CORNER GUARD
CH	COAT HOOK
CI	CAST IRON
CJ	CONTROL JOINT
CIP	CAST-IN-PLACE
CL	CENTERLINE
CLG	CEILING
CLO	CLOSET
CLR	CLEAR
CMU	CONCRETE MASONRY UNIT
CO	CLEAN OUT, CASED OPENING
COL	COLUMN
COMM	COMMUNICATION
CONC	CONCRETE
CONN	CONNECTION, CONNECT
CONSTR	CONSTRUCTION
CONT	CONTINUOUS, CONTINUE
CORR	CORRIDOR
CPT	CARPET
CSWK	CASEWORK
CTR	CENTER
CU	CUBIC
D	DEEP, DEPTH
DBL	DOUBLE
DEMO	DEMOLISH, DEMOLITION
DET	DETAIL
DF	DRINKING FOUNTAIN
DIA	DIAMETER
DIAG	DIAGONAL, DIAGRAM
DIM	DIMENSION
DIV	DIVIDE, DIVISION
DMPF	DAMPPROOF, DAMPPROOFING
DN	DOWN
DR	DOOR, DRESSING ROOM
DS	DOWNSPOUT
DW	DISHWASHER
DWG	DRAWING
DWR	DRAWER
E	EAST
EIFS	EXTERIOR INSULATION AND FINISH SYSTEM
EJ	EXPANSION JOINT
EL	ELEVATION
ELEC	ELECTRIC, ELECTRICAL
ELEV	ELEVATOR
ENCL	ENCLOSE, ENCLOSURE
EOS	EDGE OF SLAB
EP	ELECTRIC PANEL
EQ	EQUAL
EQUIP	EQUIPMENT
ESCAL	ESCALATOR
EW	EACH WAY
EXH	EXHAUST
EXP	EXPANSION, EXPOSED
EXIST	EXISTING
FA	FIRE ALARM
FCIO	FURNISHED BY CONTRACTOR/ INSTALLED BY OWNER
FD	FLOOR DRAIN
FDC	FIRE DEPARTMENT CONNECTION
FDTN	FOUNDATION
FE	FIRE EXTINGUISHER
FEC	FIRE EXTINGUISHER CABINET
FH	FIRE HYDRANT
FHC	FIRE HOSE CABINET
FIG	FIGURE
FIN	FINISH, FINISHED
FLEX	FLEXIBLE
FLR	FLOOR, FLOORING
FLUOR	FLUORESCENT
FO	FACE OF, FINISHED OPENING
FOIC	FURNISHED BY OWNER/ INSTALLED BY CONTRACTOR
FP	FIRE PROTECTION, FIREPROOF
FR	FRAME, FIRE RATED
FRMG	FRAMING
FRP	FIBERGLASS REINFORCED PLASTIC
FRT	FIRE RETARDANT TREATED
FT	FOOT, FEET
FTG	FOOTING
FUT	FUTURE
FVC	FIRE HOSE VALVE CABINET
FWC	FABRIC WALL COVERING
FWP	FABRIC WRAPPED PANEL(S)
GA	GAGE
GALV	GALVANIZED
GEN	GENERAL, GENERATOR
GFRC	GLASS-FIBER REINFORCED CONCRETE
GFRG	GLASS-FIBER REINFORCED GYPSUM
GFRP	GLASS-FIBER REINFORCED PLASTIC
GL	GLASS
GYP	GYPSUM
GYP BD	GYPSUM BOARD
H	HIGH
HB	HOSE BIBB
HCWD	HOLLOW CORE WOOD
HD	HAND DRYER
HDBD	HARDBOARD
HDW	HARDWARE
HDWD	HARDWOOD
HM	HOLLOW METAL
HO	HOLD OPEN
HORIZ	HORIZONTAL
HR	HOUR
HSS	HOLLOW STRUCTURAL STEEL
HT	HEIGHT
HVAC	HEATING, VENTILATING, AND AIR CONDITIONING
ID	INSIDE DIAMETER
IGU	INSULATED GLASS UNIT
INCL	INCLUDE, INCLUDING
INFO	INFORMATION
INSUL	INSULATE, INSULATION
INT	INTERIOR
IWD	INDIRECT WASTE DRAIN
JAN	JANITOR
JT	JOINT
KIT	KITCHEN
L	LONG
LAM	LAMINATE, LAMINATED
LAU	LAUNDRY
LAV	LAVATORY
LT	LIGHT
LTG	LIGHTING
MAS	MASONRY
MATL	MATERIAL
MAX	MAXIMUM
MDF	MEDIUM DENSITY FIBERBOARD
MDO	MEDIUM DENISTY OVERLAY
MECH	MECHANICAL
MED	MEDIUM
MEMB	MEMBRANE
MEZZ	MEZZANINE
MGT	MANAGEMENT
MFR	MANUFACTURE, MANUFACTURE
MH	MANHOLE
MIN	MINIMUM, MINUTE
MISC	MISCELLANEOUS
MO	MASONRY OPENING
MS	MOP SINK
MTD	MOUNTED
MTL	METAL
MVBL	MOVABLE
MWP	METAL WALL PANELS
N	NORTH
NIC	NOT IN CONTACT
NO	NUMBER
NOM	NOMINAL
NRC	NOISE REDUCTION COEFFICIENT
NTS	NOT TO SCALE
OC	ON CENTER
OH	OVERHEAD
OD	OUTSIDE DIAMETER
OPNG	OPENING
OPP	OPPOSITE
ORD	OVERFLOW ROOF DRAIN
OTS	OPEN TO STRUCTURE ABOVE
PBD	PARTICLEBOARD
PRCST	PRECAST
PD	PLANTER DRAIN
PERP	PERPENDICULAR
PLAM	PLASTIC LAMINATE
PLAS	PLASTER
PLYWD	PLYWOOD
PNL	PANEL
PL	PROPERTY LINE
PR	PAIR
PRKG	PARKING
PROP	PROPERTY
PT	PAINT, POINT, PRESSURE TREATED
PTN	PARTITION
R	RADIUS, RISER
RCP	REFLECTED CEILING PLAN
RD	ROOF DRAIN, ROAD
RECPT	RECEPTACLE
REF	REFER TO, REFERENCE
REF	REFRIGERATOR
REINF	REINFORCED, REINFORCING
REQD	REQUIRED
REV	REVISED, REVISION
RFG	ROOFING
RM	ROOM
RO	ROUGH OPENING
RT	RIGHT
S	SOUTH, SPANDREL
SCWD	SOLID CORE WOOD
SCHED	SCHEDULE
SD	STORM DRAIN
SECT	SECTION
SG	SAFETY GLASS
SGL	SINGLE
SHT	SHEET
SHTHG	SHEATHING
SIM	SIMILAR
SPEC	SPECIFICATION
SPKLR	SPRINKLER
SPKR	SPEAKER
SQ	SQUARE
SS	SERVICE SINK
SST	STAINLESS STEEL
STC	SOUND TRANSMISSION CLASS
STD	STANDARD
STL	STEEL
STOR	STORAGE
STRUCT	STRUCTURAL
SUSP	SUSPENDED
T	TREAD, TEMPERED
T&G	TONGUE AND GROOVE
TC	TRAFFIC COATING
TEL	TELEPHONE
TEMP	TEMPERATURE, TEMPORARY
TER	TERRAZZO
THK	THICK, THICKNESS
TO	TOP OF
TSTAT	THERMOSTAT
TV	TELEVISION
TYP	TYPICAL
UGND	UNDERGROUND
UNF	UNFINISHED
UON	UNLESS OTHERWISE NOTED
VERT	VERTICAL
VEST	VESTIBULE
VIF	VERIFY IN FIELD
VNR	VENEER
VR	VAPOR RETARDER
VWC	VINYL WALLCOVERING
W	WEST, WIDE, WIDTH
W/	WITH
W/O	WITHOUT
WC	WATER CLOSET, WALLCOVERING
WD	WOOD
WH	WALL HYDRANT
WP	WEATHERPROOF, WATERPROOF, WATERPROOFING, WORK POINT
WR	WATER RESISTANT
WT	WEIGHT
WWF	WELDED WIRE FABRIC
XMFR	TRANSFORMER
YD	YARD

GENERAL NOTES

1. DO NOT SCALE THE DRAWINGS.
2. VERIFY FIELD CONDITIONS PRIOR TO COMMENCEMENT OF EACH PORTION OF THE WORK.
3. THE CONTRACT DOCUMENTS ARE COMPLEMENTARY, AND WHAT IS REQUIRED BY ONE SHALL BE AS BINDING AS IF REQUIRED BY ALL. THE CONTRACTOR SHALL COORDINATE ALL PORTIONS OF THE WORK AS DESCRIBED IN THE CONTRACT DOCUMENTS NOTIFY THE ARCHITECT FOR RESOLUTION OF ALL DISCREPANCIES PRIOR TO CONSTRUCTION.
4. DIMENSIONS ARE TO THE STRUCTURAL GRID OR TO FINISH SURFACES, UNLESS OTHERWISE INDICATED.
5. DOORS AND CASED OPENINGS INDICATED NEARBY WALL INTERSECTIONS, SHALL BE LOCATED SO THAT THE EDGE OF THE FINISH OPENING IS SIX INCHES FROM THE FACE OF THE NEARBY WALL UNLESS OTHERWISE INDICATED. ALL OTHER DOORS AND CASED OPENINGS SHALL BE CENTERED BETWEEN ADJACENT WALL INTERSECTIONS.
6. ITEMS INDICATED AS BIDDER DESIGNED SHALL BE DESIGNED AND ENGINEERED BY THE CONTRACTOR AND/OR SUBCONTRACTOR IN COMPLIANCE WITH APPLICABLE LEGAL REQUIREMENTS, INCLUDING COMPREHENSIVE ENGINEERING ANALYSIS BY A QUALIFIED PROFESSIONAL ENGINEER, USING PERFORMANCE AND DESIGN CRITERIA INDICATED.

APPLICABLE CODES

ZONING:

SAN BERNARDINO COUNTY DEVELOPMENT CODE

CODE:

2013 CALIFORNIA BUILDING CODE (CBC), TITLE 24, PART 2

2013 CALIFORNIA FIRE CODE (CFC), TITLE 24, PART 9

2013 NATIONAL FIRE PROTECTION ASSOCIATION (NFPA), PART 13

2013 CALIFORNIA MECHANICAL CODE (CMC), TITLE 24, PART 4

2013 CALIFORNIA PLUMBING CODE (CPC), TITLE 24, PART 5

2013 CALIFORNIA ELECTRICAL CODE (CEC), TITLE 24, PART 3

2013 CALIFORNIA ENERGY CODE (CEC), TITLE 24, PART 6; SEE 2013 NON-RESIDENTIAL COMPLIANCE MANUAL FOR SUPPORT

2013 CALIFORNIA GREEN BUILDING STANDARDS CODE (CGBSC). TITLE 24, PART 11, APPLICABLE TO NEWLY CONSTRUCTED BUILDINGS.

CALIFORNIA CODE OF REGULATIONS (CCR)

SAN BERNARDINO COUNTY CODE OF ORDINANCES

ACCESSIBILIT:

CBC CHAPTER 11B ACCESSIBILITY TO PUBLIC BUILDINGS, PUBLIC ACCOMODATIONS, COMMERCIAL BUILDINGS AND PUBLIC HOUSING

BUILDING ADDRESS

145453 NATIONAL TRAILS HWY
NEEDLES, CA 92363

MAP COORDINATION
34.712717, -114.493384

SCOPE OF WORK

NEW 2 FLOORS OF NON-COMBUSTIBLE WATER TREATMENT FACILITY STRUCTURE.

UNOCCUPIED FACILITY.

LEVEL 1:
SLAB ON GRADE AND CONCRETE STRUCTURE.

LEVEL 2:
METAL STUD AND METAL ROOF

VICINITY MAP



SITE MAP



PROJECT DIRECTORY

OWNER:
ARCADIS U.S., INC.
100 MONTGOMERY, SUITE 300
SAN FRANSISCO, CALIFORNIA 94104

CONTACT:
KRISTIN MANCINI
(415) 432-6908
EMAIL: KRISTIN.MANCINI@ARCADIS-US.COM

MECHANICAL ENGINEER:
RTKL ASSOCIATES, INC.
901 SOUTH BOND STREET
BALTIMORE, MARYLAND 21231

CONTACT:
HARDEEP SINGH
(410) 537-6064
HSINGH@RTKL.COM

CIVIL ENGINEER:

ARCADIS U.S., INC.
100 MONTGOMERY, SUITE 300
SAN FRANSISCO, CALIFORNIA 94104

CONTACT:
KRISTIN MANCINI
(415) 432-6908
EMAIL: KRISTIN.MANCINI@ARCADIS-US.COM

UTILITIES:

PG&E
SAN FRANSISCO, CA

ARCHITECT:

CALLISON ARCHITECTS, PC
1420 FIFTH AVENUE, SUITE 2400
SEATTLE, WA 98101-2343
(206) 623-4646

PROJECT CONTACT:
NONDA TRIMIS
NONDA.TRIMIS@CALLISON.COM

REVIT MODEL CONTACT:
KATHRYN KILTY
KATHRYN.KILTY@CALLISON.COM

PLUMBING ENGINEER:

RTKL ASSOCIATES, INC.
901 SOUTH BOND STREET
BALTIMORE, MARYLAND 21231

CONTACT:
HARDEEP SINGH
(410) 537-6064
HSINGH@RTKL.COM

TELECOMMUNICATION:

ARCADIS U.S., INC.
100 MONTGOMERY, SUITE 300
SAN FRANSISCO, CALIFORNIA 94104

STRUCTURAL ENGINEER:
E2 ENGINEERS
488 MONTAUK AVE.
NEW LONDON, CT 06320
(860) 437-3259

CONTACT:
REVIT MODEL CONTACT:

ELECTRICAL ENGINEER:

ARCADIS U.S., INC.
100 MONTGOMERY, SUITE 300
SAN FRANSISCO, CALIFORNIA 94104

ENVIRONMENT:

ARCADIS U.S., INC.
100 MONTGOMERY, SUITE 300
SAN FRANSISCO, CALIFORNIA 94104

DRAWING INDEX

03 ARCHITECTURE		
A-12-00	GENERAL INFORMATION	
A-12-01	CODE ANALYSIS	
A-12-02	CALGREEN CHECKLIST	
A-12-03	EXTERIOR PERSPECTIVE AND 3D VIEWS	
A-12-04	OVERALL SITE PLAN	
A-12-05	ENLARGED SITE PLAN	
A-12-06	EXIT PLANS	
A-12-07	LEVEL 1 OVERALL FLOOR PLAN	
A-12-08	LEVEL 2 OVERALL FLOOR PLAN	
A-12-09	ROOF PLAN	
A-12-10	ENLARGED PLAN & ELEVATIONS	
A-12-11	LEVEL 1 OVERALL RCP	
A-12-12	LEVEL 2 OVERALL RCP	
A-12-13	STAIR FLOOR PLANS AND DETAILS	
A-12-14	STAIR DETAILS	Not Submitted
A-12-15	OVERALL EXTERIOR ELEVATIONS	
A-12-16	OVERALL EXTERIOR ELEVATIONS	
A-12-17	INTERIOR ELEVATIONS	
A-12-18	OVERALL BUILDING SECTIONS	
A-12-19	WALL SECTIONS	
A-12-20	WALL/PARTITION TYPES	
A-12-21	DETAILS	Not Submitted
A-12-22	DETAILS	Not Submitted
A-12-23	DOOR & WINDOW SCHEDULES, DETAILS	
A-12-24	FINISH MATERIAL SCHEDULES AND LEGENDS	Not Submitted
05 MECHANICAL		
M-12-00	MECHANICAL LEGEND AND ABBREVIATIONS	
M-12-01	MECHANICAL SECOND FLOOR PLAN	
M-12-02	MECHANICAL SCHEDULES	
M-12-03	MECHANICAL SCHEDULES	
06 PLUMBING		
P-12-00	PLUMBING LEGEND AND ABBREVIATIONS	
P-12-01	PLUMBING FIRST FLOOR PLAN	
P-12-02	PLUMBING SECOND FLOOR PLAN	
P-12-03	PLUMBING SCHEDULES	

- FINAL DESIGN - FOR AGENCY APPROVAL ONLY

LICENSED ARCHITECT PAUL R. MAKOWICKI C-33907 6-30-17 RENEWAL DATE STATE OF CALIFORNIA

CALLISONRTKL A DESIGN CONSULTANCY OF ARCADIS

ARCADIS

NO.	DATE	DESCRIPTION	GM/SPEC	DWN	CHKD	SUPV	APVD BY
0	11/18/2015	FINAL DESIGN		KK	NT	RC	RAO

REVISIONS

APPROVED BY
RAO

SO	
SUPV	RC
DSGN	CALLISON
DWN	KK
CHKD	NT
OK	
DATE	11/18/2015
SCALES	As indicated

TOPOCK GROUNDWATER REMEDIATION PROJECT
WATER CONDITIONING PLANT (BUILDING 12)
GENERAL INFORMATION
GAS TRANSMISSION & DISTRIBUTION
PACIFIC GAS AND ELECTRIC COMPANY
SAN FRANCISCO, CALIFORNIA

MICROFILM	
BILL OF MATL	
DWG LIST	
SUPSDS	
SUPSD BY	
SHEET NO.	of SHEETS

A-12-00 | REV 0

N1808

006-151658.00

COPYRIGHT © 2015 CALLISON

D:\1 LOCAL FILES\2 Mission Critical\Topock\Revit Files\TOPOCK-12_A_v2015 adam-2015-11-04.rvt 11/12/2015 10:01:38 AM

INSULATION REQUIREMENTS

ROOFS:

STANDING SEAM METAL ROOF WITH R-30 (U= 0.034)

TERRACOTTA STANDING METAL ROOF WITH COOL ROOF RATING : X, EMITTANCE : X, AND REFLECTANCE : X

FLOOR:

CONCRETE FLOOR WITH R-15 INSULATION U=0.059

WALLS:

R-19 BATT INSULATION
WITH R-12 RIGID INSULATION (2 INCH) U=0.057

FENESTRATIONS AND DOORS:

WINDOWS: U VALUE = U=0.38 AND SHGC = 0.25 (VERIFY PER FINAL SELECTION BUT THE SELECTION SHALL BE BETTER THAN THE NUMBERS IF POSSIBLE)

INSULATED METAL DOOR = U=0.7 (VERIFY IF WE CAN GET BETTER PRODUCT)

ROLLUP DOOR = 1.45 (VERIFY IF WE CAN GET BETTER PRODUCT)

NOTES:

1- PLEASE REFER TO DETAIL PERFORMANCE CALCULATION IN TITLE 24

FIRE SAFETY CODES

2013 CALIFORNIA FIRE CODE (CFC), TITLE 24, PART 9

FIRE EXTINGUISHERS:
CCR TITLE 19 DIVISION 1 CHAPTER 3 - PORTABLE FIRE EXTINGUISHERS

FIRE SPRINKLER STANDARD:
2013 NFPA 13 – INSTALLATION OF SPRINKLER SYSTEMS

FIRE ALARM STANDARD:
2013 NFPA 72 – NATIONAL FIRE ALARM CODE

EXIT SIGNS:
2009 NFPA 170 – STANDARD FOR FIRE SAFETY AND EMERGENCY SYMBOLS

HAZARD IDENTIFICATION STANDARD:
2012 NFPA 704 – STANDARD SYSTEM FOR IDENTIFICATION OF THE HAZARDS OF MATERIALS FOR EMERGENCY RESPONSE

FIRE DOORS:
1997 UL 10B – FIRE TEST FOR DOOR ASSEMBLIES;
2013 NFPA 80 – FIRE DOORS AND OTHER OPENING PROTECTIVES

PANIC HARDWARE:
2007 UL 305 – PANIC HARDWARE

FIRE DAMPERS
2006 UL 555 – FIRE DAMPERS

CABINETS
2005 UL 1275 – FLAMMABLE LIQUID STORAGE CABINETS

PROJECT DESCRIPTION

NEW 2 STORY WATER TREATMENT FACILITY

GENERAL INFORMATION

USE AND OCCUPANCY GROUP (CBC CHAPTER 3)	H-3 (HIGH HAZARD)
CONSTRUCTION TYPE (CBC TABLE 601 & TABLE 503)	II-B

AREAS AND HEIGHTS LIMITATIONS

	ALLOWABLE (TABLE 503)	PROVIDED
AREA PER STORY	14,000 SF.	1,620 SF. AT LEVEL 2 1,680 SF. AT LEVEL 1
MAXIMUM STORIES	2	2
MAXIMUM HEIGHT	55'	40'

FIRE PROTECTION

SPRINKLERS (903.2.5)	YES
MANUAL ACTIVATED FIRE ALARM SYSTEM (907.2.5)	YES
FIRE EXTINGUISHERS (906)	4A (75' MAX. TRAVEL DISTANCE)
DISTANCE TO FIRE HYDRANT (TABLE CC105.1)	250'

FIRE RATINGS

(TABLE 601)

STRUCTURAL FRAME	0 HR
EXTERIOR BEARING WALLS	0 HR
INTERIOR BEARING WALLS	0 HR
INTERIOR NON-BEARING WALLS	0 HR
FLOOR CONSTRUCTION	0 HR
ROOF CONSTRUCTION	0 HR
SHAFT ENCLOSURE (707.4)	0 HR
STAIRWAY ENCLOSURE (1019.1)	0 HR
CORRIDOR (TABLE 1018.1)	1 HR (SPRINKLERED)
ALLOWABLE AREA OF EXTERIOR DOORS AND WINDOWS (704.8)	UNLIMITED
OCCUPANCY SEPARATIONS (508.3.3)	N/A
INCIDENTAL USE AREAS (508.2)	N/A
ACCESSORY USE AREAS (508.3.1)	N/A
NON-SEPARATED USE (508.3.2)	N/A
FIRE SEPARATION DISTANCE (TABLE 602)	30'
DISTANCE FROM ADJACENT BUILDING OR PROPERTY LINE	>30'

APPLICABLE CODES

ZONING:

SAN BERNARDINO COUNTY DEVELOPMENT CODE

CODE:

2013 CALIFORNIA BUILDING CODE (CBC), TITLE 24, PART 2

2013 CALIFORNIA FIRE CODE (CFC), TITLE 24, PART 9

2013 NATIONAL FIRE PROTECTION ASSOCIATION (NFPA), PART 13

2013 CALIFORNIA MECHANICAL CODE (CMC), TITLE 24, PART 4

2013 CALIFORNIA PLUMBING CODE (CPC), TITLE 24, PART 5

2013 CALIFORNIA ELECTRICAL CODE (CEC), TITLE 24, PART 3

2013 CALIFORNIA ENERGY CODE (CEC), TITLE 24, PART 6; SEE 2013 NON-RESIDENTIAL COMPLIANCE MANUAL FOR SUPPORT

2013 CALIFORNIA GREEN BUILDING STANDARDS CODE (CGBSC). TITLE 24, PART 11, APPLICABLE TO NEWLY CONSTRUCTED BUILDINGS.

CALIFORNIA CODE OF REGULATIONS (CCR)

SAN BERNARDINO COUNTY CODE OF ORDINANCES

ACCESSIBILIT:

CBC CHAPTER 11B ACCESSIBILITY TO PUBLIC BUILDINGS, PUBLIC ACCOMODATIONS, COMMERCIAL BUILDINGS AND PUBLIC HOUSING

EXIT REQUIREMENTS

MAX.TRAVEL DISTANCE ALLOWED: (TABLE 1016.2)	150 Ft (SPRINKLERED)
MAX. COMMON PATH TRAVEL: (TABLE 1014.3)	2 FT
MAX. DEAD ENDS: (1018.4)	20 FT
CORRIDOR WIDTH (TABLE 1018.2):	36"
MIN. EGRESS WIDTH (1005.1):	36"

INTERIOR FINISHES

(CBC 803.9)

OCCUPANCY:	L	S
AREA:	200 SF	3,100 SF
CLASS:	B	C

- FINAL DESIGN - FOR AGENCY APPROVAL ONLY

LICENSED ARCHITECT PAUL R. MAKOWICKI C-33907 6-30-17 RENEWAL DATE STATE OF CALIFORNIA

CALLISONRTKL A DESIGN CONSULTANCY OF ARCADIS

ARCADIS

NO.	DATE	DESCRIPTION	GM/SPEC	DWN	CHKD	SUPV	APVD BY
0	11/18/2015	FINAL DESIGN		KK	NT	RC	RAO

REVISIONS

APPROVED BY	
	SO
RAO	SUPV RC
	DSGN CALLISON
	DWN KK
	CHKD NT
	OK
	DATE 11/18/2015
	SCALES 1" = 100'-0"

TOPOCK GROUNDWATER REMEDIATION PROJECT
WATER CONDITIONING PLANT (BUILDING 12)
CODE ANALYSIS
GAS TRANSMISSION & DISTRIBUTION
PACIFIC GAS AND ELECTRIC COMPANY
SAN FRANCISCO, CALIFORNIA

MICROFILM	
BILL OF MATL	
DWG LIST	
SUPSDS	
SUPSD BY	
SHEET NO.	of SHEETS
A-12-01	REV 0

N1808

006-151658.00

COPYRIGHT © 2015 CALLISON

D:\1. LOCAL FILES\2. Mission Critical\Topock\Revit Files\TOPOCK-12_A_2015 adam-2015-11-04.rvt

11/11/2015 2:01:39 PM

SECTION A5.602

NONRESIDENTIAL OCCUPANCIES APPLICATION CHECKLISTS

Application Checklist for BSC	Mandatory	
Requirements		
Project meets all of the requirements of Divisions 5.1 through 5.5	☒	
Site development		
5.106.1 Storm water pollution prevention. Newly constructed projects and additions which disturb less than one acre of land shall prevent the pollution of storm water runoff from the construction activities through local ordinance in Section 5.106.1.1 Or Best management practices (BMP) in Section 5.106.1.1	☒	See Civil Drawings
5.106.4 Bicycle Parking. For buildings within the authority of California Building Standards Commission as specified in Section 103, comply with Section 5.106.4.1. For buildings within the authority of the Division of the State Architect pursuant of Section 105, comply with Section 5.06.4.2.	☒	Not Applicable
5.106.4.1 Bicycle Parking. (BSC) Comply with Sections of 5.106.4.1.1 and 5.106.4.1.2; or meet the applicable local ordinance, whichever is stricter.	☒	Not Applicable
Short-term bicycle parking. (BSC) If the new project or addition or alteration is anticipated to generate visitor traffic, provide permanently anchored bicycle racks within 200 feet of the visitors' entrance, readily visible to passers-by, for 5 percent of new visitor motorized vehicle parking spaces being added, with a minimum of one two-bike capacity rack. **Exception:** Additions or alterations which add nico or fewer visitor vehicular parking spaces.	☒	Not Applicable
5.106.4.1.2 Long-term bicycle parking. For buildings with over 10 tenant-occupants or for additions or alterations that add 10 or more tenant vehicular parking spaces, provide secure bicycle parking for 5 percent of tenant-occupied motorized vehicle parking spaces being added, with a minimum or one space. Acceptable parking facilities shall be convenient from the street and shall meet of one of the following: 1. Covered, lockable enclosures with permanently anchored racks for bicycles; 2. Lockable bicycle rooms with permanently anchored racks; or 3. lockable, permanently anchored bicycle lockers **Note:** Additional information on recommended bicycle accommodations may be obtained from Sacramento Area Bicycle Advocates.	☒	Not Applicable
A5.106.4.3 Changing rooms. For buildings with over 10 tenant-occupants, provide changing/shower facilities in accordance with Table A5.106.4.3 or document arrangements with nearby changing/shower facilities	☒	Not Applicable
5.106.5.2 Designated parking. In new projects or additions or alterations that add 10 or more vehicular parking spaces, provide designated parking for any combination of low-emitting, fuel-efficient and carpool/van pool vehicles as shown in Table 5.106.5.2.	☒	Not Applicable
5.106.5.2.1 Parking stall marking. Paint, in the paint used for stall striping, the following characters such that the lower edge of the last word aligns with the end of the stall striping and is visible beneath a parked vehicle: CLEAN AIR/ VANPOOL/EV **Note:** Vehicles bearing Clean Air Vehicle stickers from expired HOV lane programs may be considered eligible for designated parking spaces.	☒	Not Applicable
5.106.5.3 Electric vehicle (EV) charging. [N] Construction shall comply with Section 5.106.5.3.1 or Section 5.106.5.3.2 to facilitate future installation of electric vehicle supply equipment (EVSE).	☒	Not Applicable
5.106.5.3.1 Single charging space requirements. [N] **5.106.5.3.2 Multiple charging spaces requirements. [N]** **5.106.5.3.3 EV charging space calculation. [N]** per Table 5.106.5.3.3 (approx. 3%) **5.106.5.3.4 [N] Identification.** **5.106.5.3.5 [N]** EV spaces count as designated parking. **A5.106.5.3.1 Tier 1**. Per Table A5.106.5.3.1 (approx. 4%)		
5.410.2.1 Owner's Project Requirements (OPR). [N] Documented before the design phase of the project begins the OPR shall include items listed in Section 5.410.4.	☒	Not Applicable
5.410.2.2 Basis of Design (BOD). [N] A written explanation of how the design of the building systems meets the OPR shall be completed at the design phase of the building project to cover the systems listed in Section 5.410.2.2.	☒	Not Applicable
5.410.2.3 Commissioning plan. [N] A commissioning plan describing how the project will be commissioned shall include item listed in Section 5.410.2.3.	☒	Not Applicable
5.410.2.4 [N] Functional performance testing shall demonstrate the correct installation and operation of each component, system and system-to-system interface in accordance with the approved plans and specifications.	☒	Not Applicable
5.410.2.5 Documentation and training. [N] A Systems manual and systems operations training are required.	☒	Not Applicable
5.410.2.5.1 Systems Manual. [N] The systems manual shall be delivered to the building owner or representative and facilities operator and shall include the items listed in Section 5.41.2.5.1.	☒	Not Applicable
5.410.2.5.2 Systems operations training. [N] A program for training of the appropriate maintenance staff for each equipment type and/or system shall be developed and shall include items listed in Section 5.410.2.5.2.	☒	Not Applicable
5.410.2.6 Commissioning report. [N] A report of commissioning process activities undertaken through the design and construction phases of the building project shall be completed and provided to the owner or representative.	☒	Not Applicable
5.410.4 Testing and adjusting. Testing and adjusting of systems shall be required for building less than 10,000 square feet. Applies to new systems serving additions or alterations.	☒	See Arch DWGS
5.410.4.2 Systems. Develop a written plan of procedure for testing and adjusting systems. Systems to be included for testing and adjusting shall include, as applicable to the project, the systems listed in Section 5.410.4.2.	☒	See Arch DWGS
5.410.4.3 Procedures. Perform testing and adjusting procedures in accordance with applicable standards on each system as determined by the enforcing agency.	☒	See Arch DWGS
5.410.4.4 HVAC balancing. Before a new space-conditioning system serving a building or space is operated for normal use, balance in accordance with the procedures defined by national standards listed in Section 5.410.4.3.1 or as approved by the enforcing agency.	☒	See Arch DWGS
5.410.4.4 Reporting. After completion of testing, adjusting and balancing, provide a final report of testing signed by the individual responsible for performing these services.	☒	See Arch DWGS
5.410.4.5 Operation and maintenance manual. Provide the building owner with detailed operating and maintenance instructions and copies of guaranties/warranties for each system prior to final inspection.	☒	See Arch DWGS
5.410.4.5.1 Inspections and reports. Include a copy of all inspection verifications and reports required by the enforcing agency.	☒	See Arch DWGS
Environmental Quality		
Fireplaces		
5.503.1 Install only a direct-vent sealed-combustion gas or sealed wood-burning fireplace or a sealed woodstove and refer to residential requirements in the California Energy Code, Title 24, Part 6, Subchapter 7, Section 150.	☒	Not Applicable
5.503.1.1 Woodstoves. Woodstove shall comply with US EPA Phase II emission limits, where applicable.	☒	Not Applicable
Pollutant Control		
A5.504.1 Indoor air quality (IAQ) during construction. Maintain IAQ as provided in Sections A5.504.1.1 and A5.504.1.2		
A5.504.1.1 Temporary ventilation. Provide temporary ventilation during construction in accordance with Section 121 of the California Energy Code, CCR, Title 24, Part 6 and Chapter 4 of CCR, Title 8 and as listed Items 1 and 2 in Section A5.504.1.2.		
A5.504.1.2 Additional IAQ measures. Employ additional measures as listed in Items 1 through 5 in Section A5.504.1.3.		

A5.106.5.3.1 Tier 2. Per Table A5.106.5.3.2 (approx. 6%)		
5.106.8 Light pollution reduction. [N] Outdoor lighting systems shall be designed and installed to comply with the following: 1. The minimum requirements in the California Energy Code and lighting Zones 1-4 as defined in Chapter 10 of the *California Administrative Code*; and 2. Backlight, Uplight and Glare (BUG) ratings as defined in IESNA TM-15-11; and 3. Allowable BUG ratings not exceeding those shown in Table 5.106.8, or Comply with a local ordinance lawfully enacted pursuant to Section 101.7, whichever is more stringent. **Exceptions: [N]** 1. Luminaires that qualify as exceptions in Section 140.7 of the *California Energy Code* 2. Emergency lighting **Notes: [N]** See also *California Building Code*, Chapter 12, Section 1205.6 for college campus lighting requirements for parking facilities and walkways.	☒ or ☒	See Architecture sheet See Architecture sheet
5.106.10 Grading and paving. Construction plans shall indicate how site grading or a drainage system will manage all surface water flows to keep water of entering buildings. Examples of method to manage surface water include those shown in Items 1-5. See exception for additions or alterations.	☒	
Energy Efficiency		
Performance Requirements		
5.201.1 Scope. Building meets or exceeds the requirements of the California Building Energy Efficiency Standards. 3	☒	See Architecture sheet A-003
Water Efficiency and Conservation		
Indoor Water Use		
5.303.1 Meters. Separate meters shall be installed for the uses described in Sections 5.303.1.1 and 5.303.1.2.	☒	
5.303.1.1 New buildings or additions in excess of 50,000 square feet. Separate submeters shall be installed as follows: 1. For each individual leased, rented or other tenant space within the building projected to consume more than 100 gal/day, including, but not limited to, spaces used for laundry or cleaners, restaurant or food service, medical or dental office, laboratory, or beauty salon or barbershop. 2. Where separate submeters for individual building tenants are unfeasible, for water supplied to the following subsystems: a. Makeup water for cooling towers where flow through is greater than 500 gpm (30 L/s) b. Makeup water for evaporative coolers greater than 6 gpm (0.04L/s) c. Steam and hot-water boilers with energy input more than 500,000 Btu/h (147kW)	☒ ☒ ☒	Not Applicable Not Applicable Not Applicable
5.303.1.2 Excess consumption. A separate submeter or metering device shall be provided for any tenant within a new building or an addition that is projected to consume more than 1,000 gal/day (3800 L/day).	☒	Not Applicable
5.303.3 Water Conserving plumbing fixtures and fittings. Plumbing fixtures (water closets and urinals) and fittings (faucets and showerheads) shall comply with the following:	☒	Not Applicable
5.303.3.1 Water closets. The effective flush volume of all water closets shall not exceed 1.28 gallons per flush. Tank-type water closets shall be certified to the performance criteria of the U.S. EPA WaterSense Specification for Tank-Type Toilets. **Note:** The effective flush volume of dual flush toilets is defined as the composite, average flush volume of two reduced flushes and one full flush.	☒	Not Applicable
5.303.3.2 Urinals. The effective flush volume of urinals shall not exceed 0.5 gallons per flush.	☒	Not Applicable
5.303.3.3 Showerheads. **5.303.3.3.1 Single showerhead.** Showerheads shall have a maximum flow rate of not more than 2.0 gallons per minute at 80 psi. Showerheads shall have a maximum flow rate of not more than 2.0 gallons per minute of 80 psi.	☒	Not Applicable
Showerheads shall be certified to the performance criteria of the U.S. EPA WaterSense Specification for showerheads. **5.303.3.3.2 Multiple showerheads serving one shower.** When a shower is served by more than one showerhead, the combined flow rate of all showerheads and/or other shower outlets controlled by a single valve shall not exceed 2.0 gallons per minute at 80 psi, or the shower shall be designed to allow only onc shower outlet to be in operation at a time. **Note:** A hand-held shower shall be considered a showerhead.	☒	Not Applicable
5.303.4 Areas of additions or alteration. For those occupancies within the authority of the California Building Standards Commission as specified in Section 103, the provisions of Section 5.303.3 shall apply to new fixtures in additions or areas of alterations to the building.	☒	Not Applicable
A5.303.5 Dual Plumbing. New buildings and facilities shall be dual plumbing for potable and recycled water systems for toilet flushing when recycled water is available as determined by the enforcement authority.	☒	
5.303.6 Standards for plumbing fixtures and fittings. Plumbing fixtures and fittings shall bc installed in accordance with the *California Plumbing Code*, and shall meet the applicable standards referenced in Table 1401.1 of the California Plumbing Code and in Chapter 6 of this code.	☒	See Plumbing
Outdoor Water Use		
5.304.1 Water Budget. A water budget shall be developed for landscaped irrigation use. Applies to additions or alterations.	☒	Not Applicable
5.304.2 Outdoor potable water use. For new water service, separate meters or submeters shall be installed for indoor and outdoor potable water use for landscaped areas of at least 1,000 square feet but not more than 5,000 square feet, separate submeters shall be installed for outdoor potable water use. Applies to additions or alterations. A5.504.2.1 Outdoor potable water use. For new water service not subject to the provisions of Water Code Section 535, separate meters of submeters shall be installed for outdoor potable water use for landscaped areas of at least 500 square fcet but not more than 1,000 square fcet (the level at which Section 5.304.2 applies).	☒	Not Applicable
5.304.3.1 Irrigation design. In new nonresidential projects with at least 1,000 square feet but not more than 2,500 square fcet of landscaped area (the level at which the MLO applies), install irrigation controllers and sensors which include the following criteria and meet manufacturer's recommendations. Applies to additions or alterations.	☒	Not Applicable
5.304.3.1 Irrigation controllers. Automatic irrigation system controllers installed at the time of final inspection shall comply with the following: **1. Controller shall be weather – or soil moisture-based controllers that automatically adjust irrigation in response to changes in plants' needs as weather conditions change.** **2. Weather – based controllers without integral rain sensors or communication systems that account for local rainfall shall have a separate wired or wireless rain sensor which connects or communications with the controller(s). Soil moisture-base controllers are not required to have rain sensor input.**	☒	Not Applicable
Weather Resistance and Moisture Management		
5.407.1 Weather protection. Provide a weather-resistant exterior wall and foundation envelope as required by California Building Code, Section 1403.2 and California Energy Code, Section 150, manufacturer's installation instructions or local ordinance, whichever is more stringent.	☒	See Architecture drawing
5.407.2 Moisture control. Employ moisture control measures by the following methods; **5.407.2.1 Sprinklers.** Design and maintain landscaep irrigation systems to prevent irrigation spray on structures. **5.407.2.2 Entries and openings.** Design exterior entries and opening to prevent water intrusion into buildings as follows **5.407.2.2.1 Exterior door protection.** Primary exterior entries shall be covered to prevent water intrusion by using nonabsorbent floor and wall finishes within as least 2 feet around and perpendicular to such opening plus at least one of the following: 1. An installed awning at least 4 feet in depth	☒ ☒ ☒	See Architecture drawing Not Applicable See Architecture Drawing See Architecture Drawing
2. The door is protected by a roof overhang at least 4 feet in depth 3. The door is recessed at least 4 feet. 4. Other method which provide equivalent protection.		
5.407.2.2.2 Flashing. Install flashings integrated with a drainage plane.	☒	See Arch DWG
Construction Waste Reduction, Disposal and Recycling		
5.408.1 Construction waste management. Recycle and/or salvage for reuse a minimum of 50% of the non-hazardous construction waste in accordance with Section 5.408.1.1, 5.408.1.2 or 5.401.1.3; or meet a local construction and demolition waste management ordinance, whichever is more stringent.	☒	See Arch DWG
5.408.1.1 Construction waste management plan. Where a local jurisdiction does not have a construction and demolition waste management ordinance that is more stringent, submit a construction waste management plan that complies with Items 1 through 4 of this section.	☒	See Arch DWG
5.408.1.2 Waste management company. Utilize a waste management company that can provide verifiable documentation that the percentage of construction waste material diverted from the landfill complies with this section.	☒	See Arch DWG
Exceptions to Section 5.408.1.1 and 5.408.1.2: 1. Excavated soil and land- clearing debris 2. Alternate waste reduction methods developed by working with local agencies if diversion or recycle facilities capable of compliance with this item do not exist. 3. Demolition waste meeting local ordinance or calculated in consideration of local recycling facilities and markets.		See Arch DWG
5.408.1.4 Documentation. Provide documentation of the waste management plan that meets the requirements listed in Sections 5.408.1.1 through 5.408.1.3, and the plan is accessible to the enforcement authority.	☒	See Arch DWG
5.408.1.3 Waste stream reduction alternative. The combined weight of new construction disposal that does not exceed two pounds per square foot of building area may by deems to meet the 50 percent minimum requirement as approved by the enforcing agency.	☒	See Arch DWG
5.408.3 Excavated soil and land clearing debris. 100 percent of trees, stumps, rocks and associated vegetation and soils resulting primarily from land clearing shall be reused or recycled. **Exception:** Reuse, either on-or off-site, of vegetation of soil contaminated by disease or pest infestation.	☒	See Arch DWG
Building Maintenance and Operation		
5.410.1 Recycling by occupants. Provide readily accessible areas that serve the entire building and are identifies for the depositing, storage and collection of nonhazardous materials for recycling. **5.410.1.1 Additions. [A]** All additions conducted within a 12-month period under single or multiple permits, resulting in an increase of 30 percent or more in floor area, shall provide recycling area on site. **Exception:** Additions within a tenant space resulting in less than a 30-percent increase in the tenant space floor area.	☒	See Arch DWG
5.410.2 Commissioning. [N] For new building 10,000 square feet and over, building commissioning for all building systems covered by Title 24, Part 6, process systems and renewable energy systems shall be included in the design and construction processes of the building project. Commissioning requirements shall include items listed in Section 5.410.2. **Exceptions:** 1. Unconditioned warehouses of any size 2. Areas less than 10,000 square feet used for offices of other conditioned accessory spaces within unconditioned warehouses. 3. Tenant improvements less than 10,000 square fcet as dcscribed in Section 303.1.1. 4. Commissioning requirements for energy systems covered by the *California Energy Code.* 5. Open parking garages of any size, or open parking garage areas of any size, within a structure.	☒	Not Applicable

5.504.3 Temporary ventilation. If the HVAC system is used during construction, usc return air filters with a MERV of 8, based on ASHRAE 52.2-1999, or an avcrage efficiency of 30% based on ASHRAE 52.1-1992. Replace all filters immediately prior to occupancy. Applies to additions or alterations.	☒	See Arch DWGS
5.504.3 Covering of duct opening and protection of mechanical equipment during construction. At the time of rough installation and during storage on the construction site and until final startup of the heating, cooling and ventilating equipment, all duct and other related air distribution component openings shall be covered with tape, plastic, sheet metal or other methods acceptable to the enforcing agency to reduce the amount of dust, water and debris which may cnter the system.	☒	See Arch DWGS
5.504.4 Finish material pollutant control. Finish materials shall comply with Sections 5.504.4.1 through 5.504.4.4. **5.504.4.1 Adhesives, sealants, caulks.** Adhesives and sealants used on the project shall meet the requirements of the following standards. 1. Adhesives, adhesive bonding primers, adhesive primers, sealants, sealant primers and caulks shall comply with local or regional air pollution control or air quality management's district rules where applicable or SCAQMD Rule 1168 VOC limits, as shown in Tables 5.504.4.1 and 5.504.4.2. 2. Aerosol adhesives and smaller unit sizes of adhesives and sealant of caulking compounds (in units of product, less packaging, which do not weight more than one pound and do not consist of more than 16 fluid ounces) shall comply with statewide VOC standards and other requirements, including prohibitions on use of certain toxic compounds, of California Code of Regulations, Title 17, commencing with Section 94507.	☒ ☒	See Arch DWGS See Arch DWGS
5.504.4.3 Paints and coatings. Architectural paints and coatings shall comply with Table 5.504.4.3 unless more stringent local limits apply. **5.504.4.3.1 Aerosol paints and coatings.** Acrosol paints and coatings shall meet the Product- Weighted MIR Limits for ROC in Section 94522 (a)(3) and other requirements, including prohibitions on use of certain toxic compounds and ozone depleting substances(CCR, Title 17, Section 94520, et seq.). **5.504.4.3.2 Verification.** Verification of compliance with this section shall be provided at the request of the enforcing agency.	☒ ☒ ☒	See Arch DWGS Scc Arch DWGS See Arch DWGS
5.504.4.4 Carpet systems. All carpet installed in the building interior shall meet the testing and product requirements of one of the standards listed in Section 5.504.4.4. **5.504.4.4.1 Carpet cushion.** All carpet cushion installed in the building interior shall meet the requirements of the Carpet and Rug Institute's Green Label program. **5.504.4.4.2 Carpet adhesive.** All carpet adhesive shall meet the requirements of Table 5.504.4.1.	☒ ☒ ☒	Not Applicable Not Applicable Not Applicable
5.504.4.5 Composite Wood products. Hardwood plywood, particleboard and medium density fiberboard composite wood products used on the interior or exterior of the building shall meet the requirements for the formaldehyde as specified in Table 5.504.4.5. **A5.504.4.5.1 No added formaldehyde, Tier 2.** Use composite wood products approved by the ARB as no-added formaldehyde (NAF) based rcsins or ultra-low cmitting formaldchyde (ULEF) rcsins. **5.504.5.3 Documentation.** Verification of compliance with this section shall be provided as requested by the enforcing agency. Documentation shall include at least one of the following: 1. Product certifications and specifications. 2. Chain of custody certifications. 3. Product labeled and invoiced as meeting the Composite Wood Products regulation (scc CCR, Title 17, Section 93120, et seq.). 4. Exterior grade products marked as meeting the PS-1 or PS-2 standards of the Engineered Wood Association, the Australian AS/NZS 2269 or European 636 3S standards. 5. Other methods acceptable to the enforcing agency.	☒ ☒ ☒ ☒ ☒	
5.504.4.6 Resilient flooring systems. For 80 percent of floor area receiving resilient flooring, install resilient flooring which mects one of the following: 1. Certified under the Resilient Floor Covering Institute (RFCI) FloorScore program; 2. Compliant with the VOC-emission limits and testing requirements specified in the California Department of Public Health's 2010 Standard Method of the Testing and Evaluation Chambers, Version 1.1, February 2010; 3. Compliant with the Collaborative for High Performance Schools California (CA-CHPS) Criteria Interpretation for EQ7.0 and 7.1 (formerly EQ. 2.2) dated July 2012 and listed in the CHPS High Performance Product Database; or 4. Products certified under UL GREENGUARD Gold (formerly the Greenguard Children's & Schools Program). **A5.504.4.6.1 Verification of compliance.** Documentation shall be provided verifying that resilient flooring material meet the pollutant emission limits.	☒ ☒	See Arch DWG See Arch DWG
A5.504.5 Hazardous particulates and chemical pollutants. Minimize and control pollutant entry into buildings and cross-contamination of regularly occupied areas. **A5.504.5.3 Filters.** In mechanically ventilated buildings, provide regularly occupied areas of the building with air filtration media for outside and return air that provides at least a MERV of 8. MERV 8 filters shall be installed prior to occupancy, and recommendations for maintenance with filtcrs of the samc value shall be included in the operation and maintenance manual. **Exceptions:** 1. An ASHRAE 10-percent to 15-percent efficiency filter shall be permitted for an HVAC unit meeting the 2013 California Energy Code having 60,000 Btu/h or less capacity per fan coil, if the energy use of the air delivery system is 0.4 W/cfm or less at design air flow. 2. Exist mechanical equipment. **5.504.5.3.1 Labeling.** Installed filters shall be clearly labeled by the manufacturer indicating the MERV rating.	☒	See Arch DWG
5.504.7 Environmental tobacco smoke (ETS) control. Prohibit smoking within 25 feet of building entries, outdoor air intakes and operable windows where outdoor areas are provided for smoking and within the building as already prohibited by other laws or regulations; or as enforced by ordinances, regulations or policies of any city, county, city and county, California Community College, campus of the California State University or campus of the University of California, whichever are more stringent.	☒	See Arch DWG
Indoor Moisture and Radon Control		
5.505.1 Indoor moisture control. Buildings shall meet or exceed the provisions of *California Building Code*, CCR, Title 24, Part 2, Sections 1203 and Chapter 14.1.	☒	See Arch DWG
Air Quality and Exhaust		
5.506.1 Outside air delivery. For mechanically or naturally ventilated spaces in buildings, meet the minimum requirements of Section 120.1 of the *California Energy Code* and Chapter 4 of CCR, Title 8 or the applicable local code, whichever is more stringent.	☒	Scc Arch DWG
5.506.2 Carbon dioxide (CO_2) monitoring. For buildings or additions equipped with demand control ventilation, CO_2 sensors and ventilation controls shall be specified and installed in accordance with the requirements of the *California Energy Code*, CCR, Section 120(C4). 3	☒	See Arch DWG
5.507.4 Acoustical control. Employ building assemblies and components with STC values determined in accordance with ASTM E 90 and ASTM E413 or OITC determined in accordance with ASTM E 1332, using either the prescriptive or performance method in Section 5.507.4.1 or 5.507.4.2. **5.507.4.1 Exterior noise transmission, prescriptive method.** Wall and floor-ceiling assemblies exposed to the noise source making up the building envelope shall have exterior wall and rood ceiling assemblies meeting a composite STC rating of at least 50 or a composite OITC rating of no less than 40 with exterior windows of a minimum STC of 40 or OITC of 30 in the locations described in Items 1 and 2. Also applies to addition envelope or altered envelope.	☒ ☒	See Arch DWG
5.507.4.1.1 Noise exposure where noise contours are not readily available. Buildings expose to a noise level of 65 dB L_{eq}– 1Hr during any hour of operation shall have exterior wall and rood-ceiling assemblies exposed to the noise source meeting a composite STC rating of at least 45 (or OITC 35), with cxterior windows of a minimum STC of 40 (or OITC 30). Also applies to addition or alteration exterior wall.	☒	
5.507.4.2 Performance method. For buildings located as defined in Sections A5.507.4.1 or A5.507.4.1.1, wall and roof –ceiling assemblies making up the building envelope shall be constructed to provide an interior noise environment attributable to exterior sources that does not exceed an hourly equivalent noise level (L_{eq}– 1Hr) of 50 dBA in occupicd areas during any hour of operation. Also applies to addition envelope or altered envelope.	☒	
5.507.4.2.1 Site features. Exterior features such as sound walls or eath berms may be utilizcd as appropriate to the project to mitigate sounds migration to the interior. Also applies to addition envelope or altered envelope.	☒	
5.507.4.2.1 Documentation of compliance. An acoustical analysis documenting complying interior sound levels shall be prepared by personnel approved by the architect or engineer of record.	☒	
5.507.4.3 Interior sound transmission. Wall and floor-ceiling assemblies separating tcnant spaces and tcnant spaces and public places shall have an STC of at least 40.	☒	
Outdoor Air Quality		
5.508.1 Ozone depletion and global warming reductions. Installations of HVAC, refrigeration and fire suppression equipment shall comply with Sections 5.508.1.1 and 5.508.1.2. **5.508.1.1 CFCs.** Install HVAC and refrigeration equipment that does not contain CFCs. 3 **5.508.1.2 Halons.** Install firc suppression cquipmcnt that does not contain Halons.3 **A5.508.1.3 Hydrochlorofluorocarbons (HCFCs).** Install HVAC and refrigeration equipment that does not contain HCFCs. **A5.508.1.4 Hydrofluorocarbons (HFCs).** Install HVAC complying with either of the following: 1. Install HVAC, refrigeration and fire suppression equipment that do not contain HFCs or that do not contain HFCs with a global warming potential greater than 150. 2. Install HVAC and refrigeration equipment that limit the use of HFC refrigerant through the use of a secondary heat transfer fluid with a global warming potential no greater than 1.	☒ ☒	See Arch DWG See Arch DWG
5.508.2 Supermarket refrigerant leak reduction. New commercial refrigeration systems shall comply with the provisions of this section when installed in retail food 8,000 square feet or more conditioned area, and that utilize either refrigerated display cases, or walk-in coolers or freezers connected to remote compressor units or condensing units. The leak reduction measures apply to refrigeration systems containing high-global-warming potential (high-GWP) refrigcrants with a GWP of 150 or greater. New refrigeration systems include both new facilities and the replacement of existing refrigeration systems in existing facilities. Exception: Refrigeration systems containing low-global warming potential (low-GWP) refrigerant with a GWP value less than 150 are not subject to this section. Low-GWP refrigerants are nonozone-depleting refrigrants that include ammonia, carbon dioxide (CO_2), and potentially other refrigerants.	☒	Not Applicable

- FINAL DESIGN - FOR AGENCY APPROVAL ONLY

LICENSED ARCHITECT PAUL R. MAKOWSKI C-33907 6-30-17 RENEWAL DATE STATE OF CALIFORNIA

CALLISONRTKL A DESIGN CONSULTANCY OF ARCADIS

ARCADIS

NO.	DATE	DESCRIPTION	GM/SPEC	DWN	CHKD	SUPV	APVD BY
0	11/18/2015	FINAL DESIGN		KK	NT	RC	RAO

REVISIONS

APPROVED BY	
RAO	

SO	
SUPV	RC
DSGN	CALLISON
DWN	KK
CHKD	NT
OK	
DATE	11/18/2015
SCALES	

TOPOCK GROUNDWATER REMEDIATION PROJECT

WATER CONDITIONING PLANT (BUILDING 12) CALGREEN CHECKLIST

GAS TRANSMISSION & DISTRIBUTION

PACIFIC GAS AND ELECTRIC COMPANY

SAN FRANCISCO, CALIFORNIA

MICROFILM	
BILL OF MATL	
DWG LIST	
SUPSDS	
SUPSD BY	
SHEET NO.	of SHEETS
A-12-02	REV 0

N1808

006-191658.00

COPYRIGHT © 2015 CALLISON

D11: LOCAL FILES\2. Master Civil\Topock\Sheet Files\TOPOCH-10_A_A010 sdam 2015-11-04.rvt 11/17/2015 2:01:48 PM

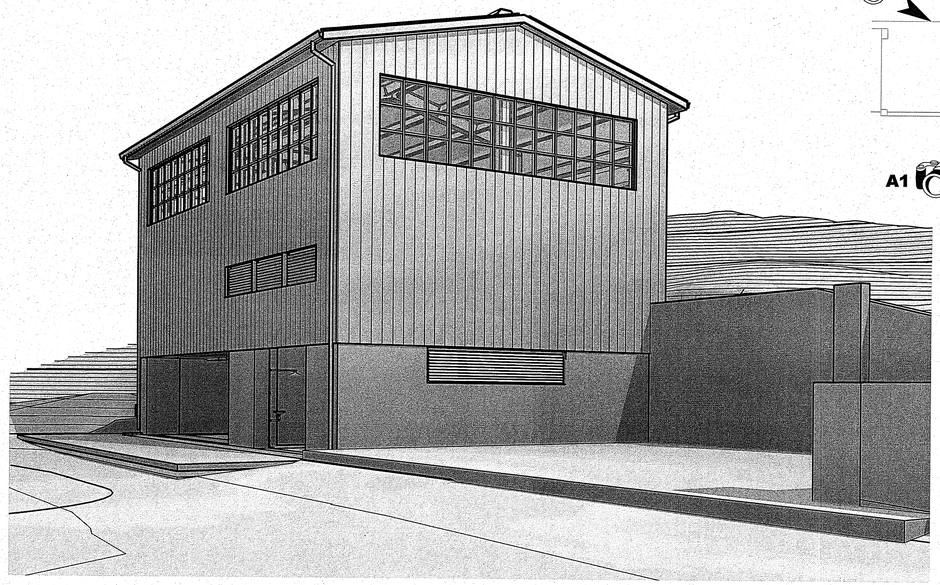

C1 SOUTH PERSPECTIVE

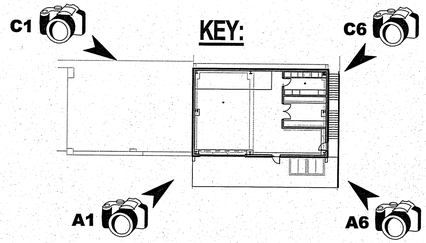

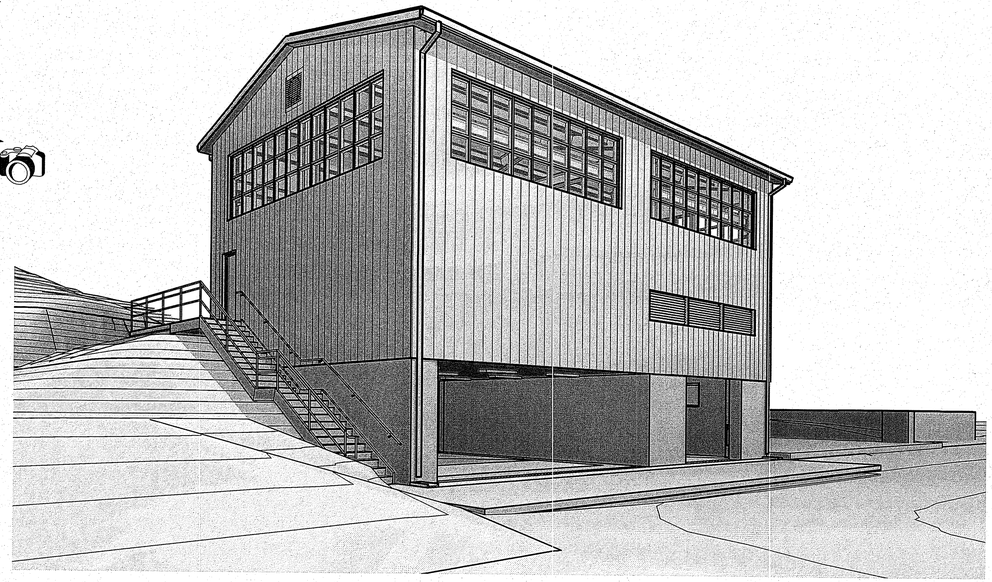

C6 WEST PERSPECTIVE

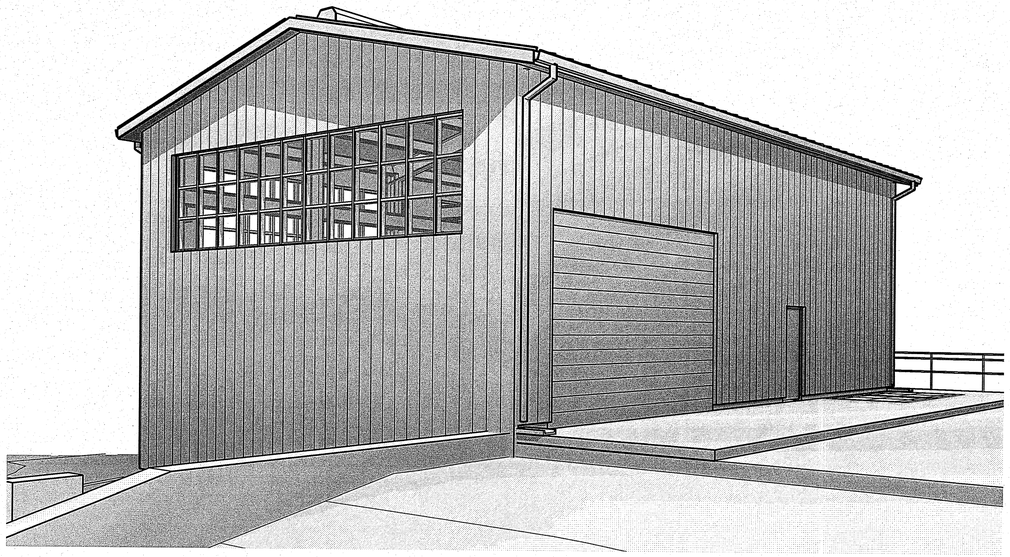

A1 EAST PERSPECTIVE

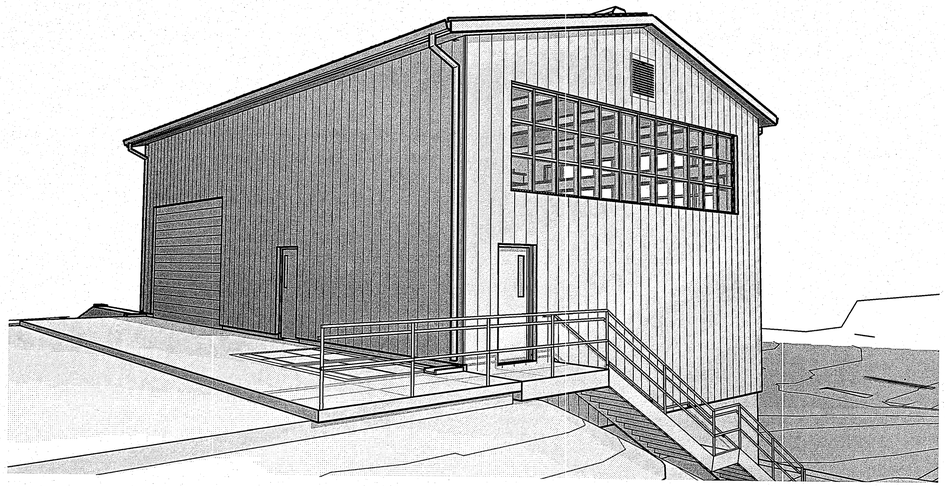

A6 NORTH PERSPECTIVE

- FINAL DESIGN - FOR AGENCY APPROVAL ONLY

LICENSED ARCHITECT PAUL R. MAKOWICKI C-33907 6-30-17 RENEWAL DATE STATE OF CALIFORNIA

CALLISONRTKL A DESIGN CONSULTANCY OF ARCADIS

ARCADIS

N1808

NO.	DATE	DESCRIPTION	GM/SPEC	DWN	CHKD	SUPV	APVD BY

REVISIONS

NO.	DATE	DESCRIPTION	GM/SPEC	DWN	CHKD	SUPV	APVD BY
0	11/18/2015	FINAL DESIGN	KK	NT	RC	RAO	

REVISIONS

APPROVED BY	SO
	SUPV RC
RAO	DSGN CALLISON
	DWN KK
	CHKD NT
	OK
	DATE 11/18/2015
	SCALES 1" = 30'-0"

TOPOCK GROUNDWATER REMEDIATION PROJECT

WATER CONDITIONING PLANT (BUILDING 12)

EXTERIOR PERSPECTIVE AND 3D VIEWS

GAS TRANSMISSION & DISTRIBUTION

PACIFIC GAS AND ELECTRIC COMPANY

SAN FRANCISCO, CALIFORNIA

MICROFILM	
BILL OF MATL	
DWG LIST	
SUPSDS	
SUPSD BY	
SHEET NO.	of SHEETS
A-12-03	REV 0

006-151658.00

COPYRIGHT © 2015 CALLISON

D:\T: LOCAL FILES\2. Mission Critical\Topock\Revit Files\TOPOCK-12_A_2015 sdem-2015-11-04.rvt 11/11/2015 2:02:10 PM

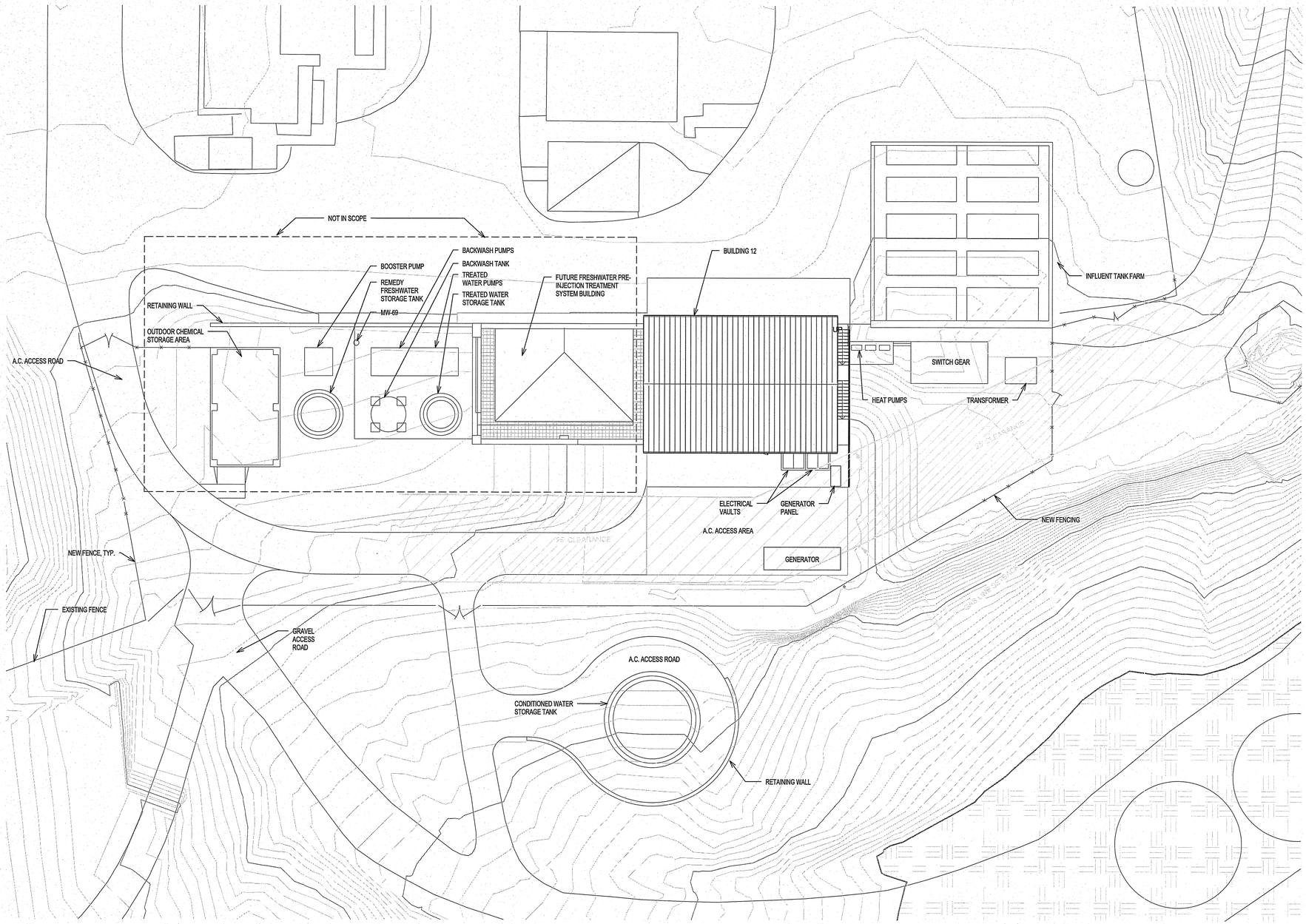

A1 OVERALL SITE PLAN
1/16" = 1'-0"

SCALE: 1/16" = 1'-0"
AT: 22"x 34"
0 15' 30' 60'

- FINAL DESIGN - FOR AGENCY APPROVAL ONLY

LICENSED ARCHITECT PAUL K. MAKOWICKI C-33907 6-30-17 RENEWAL DATE STATE OF CALIFORNIA

CALLISONRTKL A DESIGN CONSULTANCY OF ARCADIS

ARCADIS

NO.	DATE	DESCRIPTION	GM/SPEC	DWN	CHKD	SUPV	APVD BY
0	11/18/2015	FINAL DESIGN		KK	NT	RC	RAO

REVISIONS

APPROVED BY	
RAO	SO
	SUPV RC
	DSGN CALLISON
	DWN KK
	CHKD NT
	OK
	DATE 11/18/2015
	SCALES 1/16" = 1'-0"

TOPOCK GROUNDWATER REMEDIATION PROJECT
WATER CONDITIONING PLANT (BUILDING 12)
OVERALL SITE PLAN
GAS TRANSMISSION & DISTRIBUTION
PACIFIC GAS AND ELECTRIC COMPANY
SAN FRANCISCO, CALIFORNIA

MICROFILM	
BILL OF MATL	
DWG LIST	
SUPSDS	
SUPSD BY	
SHEET NO.	of SHEETS
A-12-04	REV 0

N1808

006-151658.00

COPYRIGHT © 2015 CALLISON

D:\1. LOCAL FILES\2. Mission Critical\Topock\Revit Files\TOPOCK-12_A_v2015 adam-2015-1-04.rvt
11/11/2015 2:02:12 PM

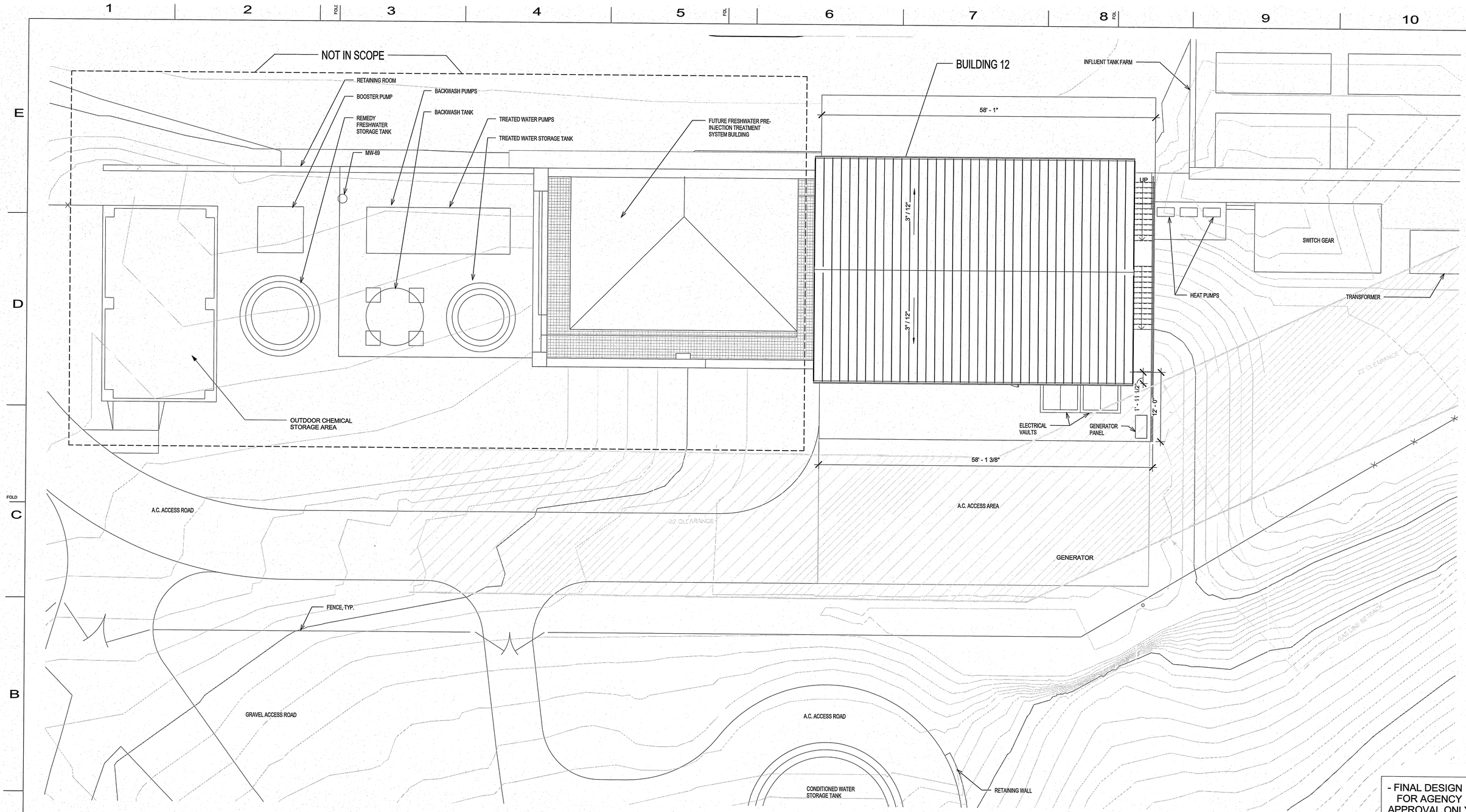

- FINAL DESIGN - FOR AGENCY APPROVAL ONLY

LICENSED ARCHITECT PAUL R. MARCHWIAK C-33907 6-30-17 RENEWAL DATE STATE OF CALIFORNIA

A1 ENLARGED SITE PLAN
1/8" = 1'-0"

SCALE: 1/16" = 1'-0"
AT: 22"x 34" 0 15' 30' 60'

CALLISONRTKL A DESIGN CONSULTANCY OF ARCADIS

ARCADIS

NO.	DATE	DESCRIPTION	GM/SPEC	DWN	CHKD	SUPV	APVD BY
0	11/18/2015	FINAL DESIGN		KK	NT	RC	RAO

REVISIONS

APPROVED BY		
RAO	SO	
	SUPV	RC
	DSGN	CALLISON
	DWN	KK
	CHKD	NT
	OK	
	DATE	11/18/2015
	SCALES	1/8" = 1'-0"

TOPOCK GROUNDWATER REMEDIATION PROJECT
WATER CONDITIONING PLANT (BUILDING 12)
ENLARGED SITE PLAN
GAS TRANSMISSION & DISTRIBUTION
PACIFIC GAS AND ELECTRIC COMPANY
SAN FRANCISCO, CALIFORNIA

MICROFILM	
BILL OF MATL	
DWG LIST	
SUPSDS	
SUPSD BY	
SHEET NO.	of SHEETS
A-12-05	REV 0

N1808

606-151658.00

COPYRIGHT © 2015 CALLISON

D:\1. LOCAL FILES\2. Mission Critical\Topock\Revit Files\TOPOCK-12_A_2015 aslan-2015-11-04.rvt
11/11/2015 2:05:13 PM

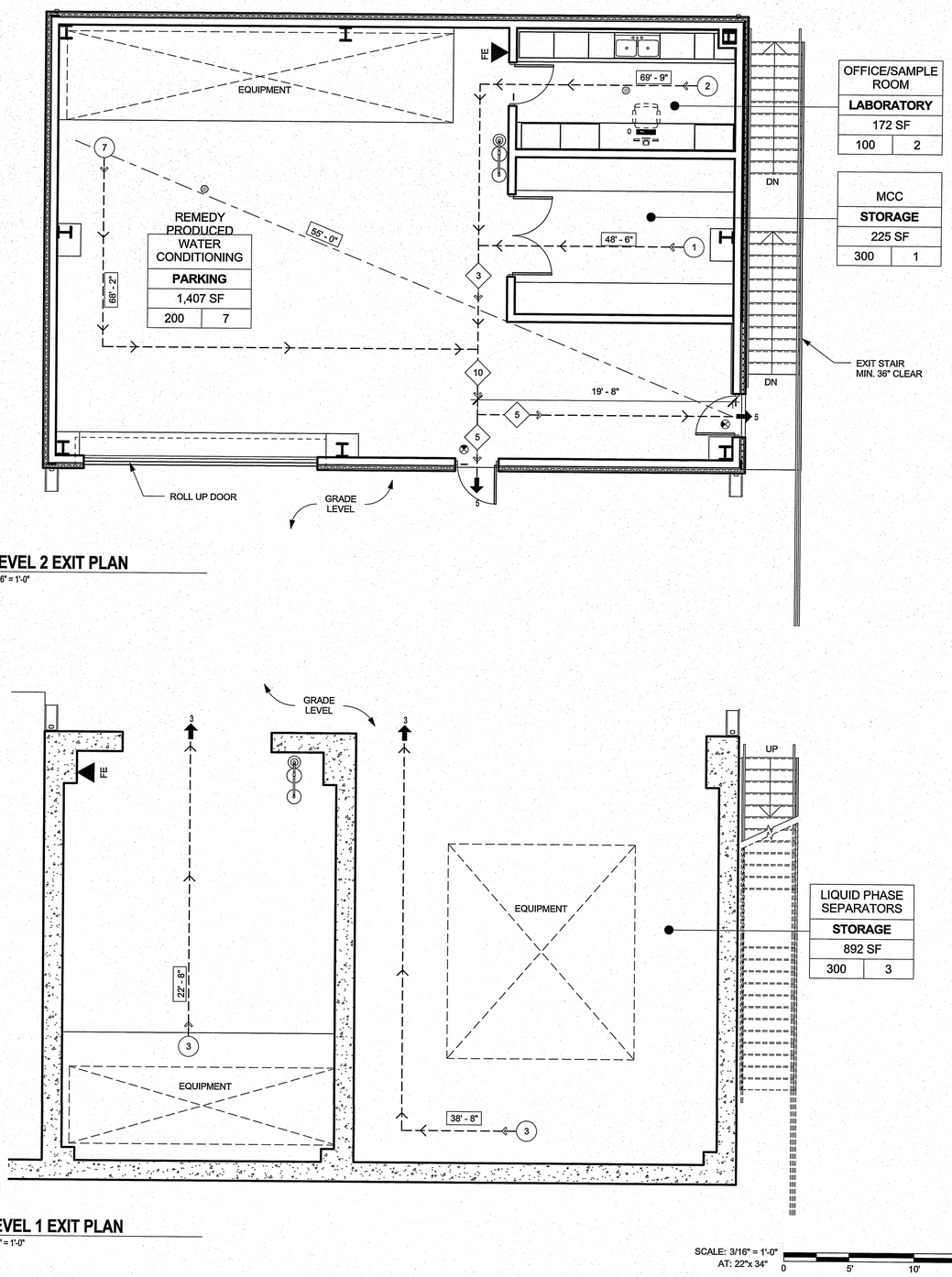

C3 **LEVEL 2 EXIT PLAN**
3/16" = 1'-0"

A3 **LEVEL 1 EXIT PLAN**
3/16" = 1'-0"

SCALE: 3/16" = 1'-0"
AT: 22"x 34"
0 5' 10' 20'

EXIT PLAN LEGEND

ELECTRIC ROOM — USE OF SPACE (ROOM NAME)
FUNCTION OF SPACE (TABLE 1004.1.2) → MECHANICAL
600 SF — FLOOR AREA
OCCUPANT LOAD FACTOR (TABLE 1004.1.2) → 300 | 2 — MAX. OCCUPANTS PER SPACE

- XX — OCCUPANT LOAD / SPACE
- XX — CUMULATIVE OCCUPANT LOAD / PATH
- XX — OCCUPANT LOAD / BUILDING EXIT POINT
- EXIT ACCESS PATH (COMMON PATH OF TRAVEL)
- XXX'-X" — TRAVEL DISTANCE
- EXIT SIGN (DIRECTIONAL)
- EXIT SIGN
- FE — FIRE EXTINGUISHER CABINET

EXIT REQUIREMENTS

MAX.TRAVEL DISTANCE ALLOWED: (TABLE 1016.2)	150 Ft	(SPRINKLERED)
MAX. COMMON PATH TRAVEL: (TABLE 1014.3)	2 FT	
MAX. DEAD ENDS: (1018.4)	20 FT	
CORRIDOR WIDTH (TABLE 1018.2):	36"	
MIN. EGRESS WIDTH (1005.1):	36"	

FIRE PROTECTION

SPRINKLERS (903.2.5)	YES
MANUAL ACTIVATED FIRE ALARM SYSTEM (907.2.5)	YES
FIRE EXTINGUISHERS (906)	4A (75' MAX. TRAVEL DISTANCE)
DISTANCE TO FIRE HYDRANT (TABLE CC105.1)	250'

FIRE RATINGS

(TABLE 601)

STRUCTURAL FRAME	0 HR	
EXTERIOR BEARING WALLS	0 HR	
INTERIOR BEARING WALLS	0 HR	
INTERIOR NON-BEARING WALLS	0 HR	
FLOOR CONSTRUCTION	0 HR	
ROOF CONSTRUCTION	0 HR	
SHAFT ENCLOSURE (707.4)	0 HR	
STAIRWAY ENCLOSURE (1019.1)	0 HR	
CORRIDOR (TABLE 1018.1)	1 HR	(SPRINKLERED)
ALLOWABLE AREA OF EXTERIOR DOORS AND WINDOWS (704.8)	UNLIMITED	
OCCUPANCY SEPARATIONS (508.3.3)	N/A	
INCIDENTAL USE AREAS (508.2)	N/A	
ACCESSORY USE AREAS (508.3.1)	N/A	
NON-SEPARATED USE (508.3.2)	N/A	
FIRE SEPARATION DISTANCE (TABLE 602)	30'	
DISTANCE FROM ADJACENT BUILDING OR PROPERTY LINE	>30'	

- FINAL DESIGN - FOR AGENCY APPROVAL ONLY

LICENSED ARCHITECT PAUL R. MAKOWICKI C-33907 6-30-17 RENEWAL DATE STATE OF CALIFORNIA

CALLISONRTKL A DESIGN CONSULTANCY OF ARCADIS
ARCADIS

NO.	DATE	DESCRIPTION	GM/SPEC	DWN	CHKD	SUPV	APVD BY
0	11/18/2015	FINAL DESIGN	KK	NT	RC	RAO	

REVISIONS

APPROVED BY: RAO

SO	
SUPV	RC
DSGN	CALLISON
DWN	AS
CHKD	AS
OK	
DATE	11/18/2015
SCALES	As indicated

TOPOCK GROUNDWATER REMEDIATION PROJECT
WATER CONDITIONING PLANT (BUILDING 12)
EXIT PLANS
GAS TRANSMISSION & DISTRIBUTION
PACIFIC GAS AND ELECTRIC COMPANY
SAN FRANCISCO, CALIFORNIA

MICROFILM	
BILL OF MATL	
DWG LIST	
SUPSDS	
SUPSD BY	
SHEET NO.	of SHEETS
A-12-06	REV 0

N1808

006-151658.00

COPYRIGHT © 2015 CALLISON

D:\1. LOCAL FILES\2. Mission Critical\Topock\Revit Files\TOPOCK-12_A_v2015 alam-2015-11-04.rvt 11/11/2015 2:02:14 PM

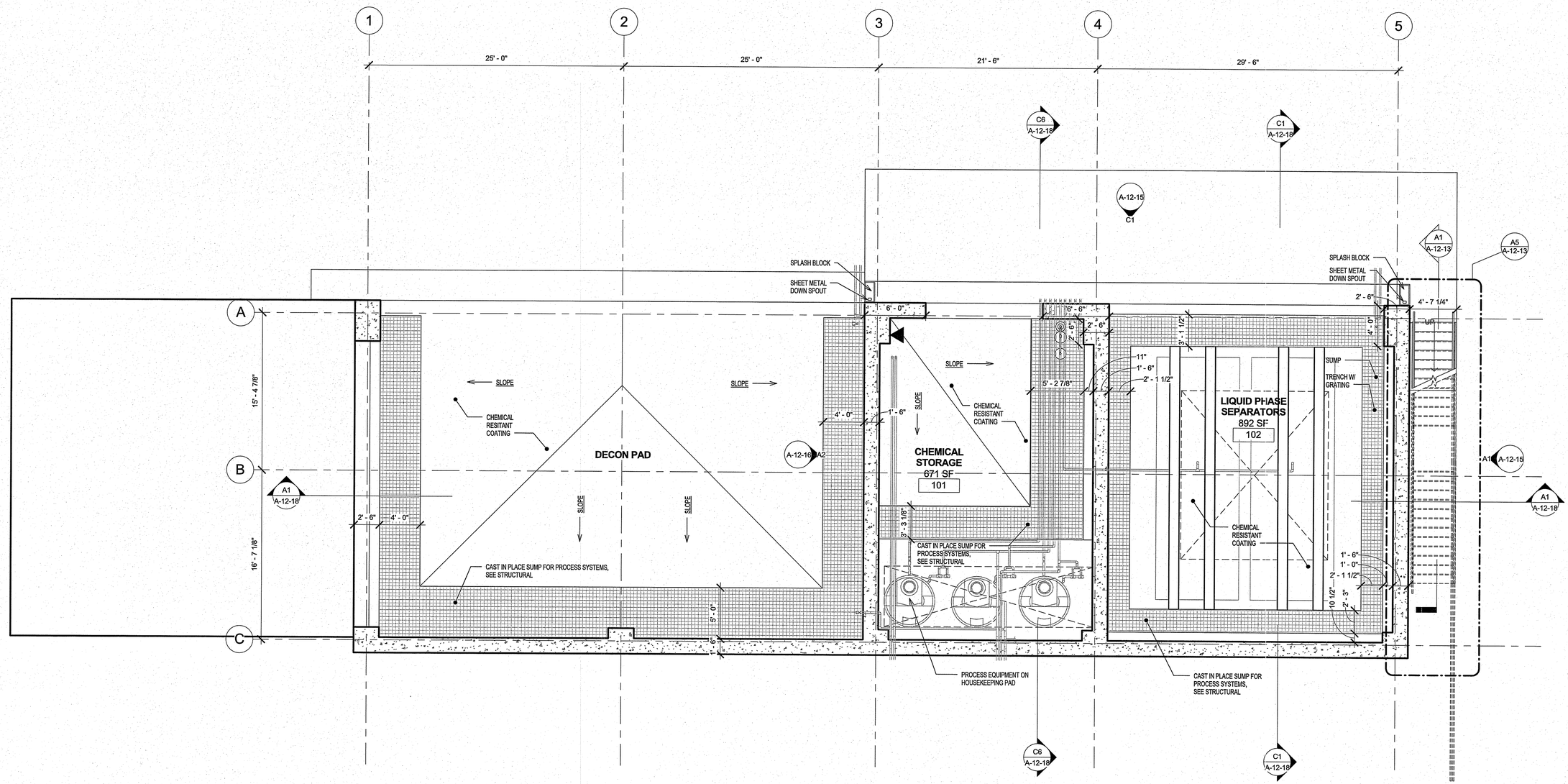

A1 LEVEL 1 OVERALL FLOOR PLAN

3/16" = 1'-0"

SCALE: 3/16" = 1'-0"
AT: 22"x 34"
0 5' 10' 20'

- FINAL DESIGN -
FOR AGENCY
APPROVAL ONLY

LICENSED ARCHITECT
PAUL R. MAKOWICKI
C-33907
6-30-17
RENEWAL
DATE
STATE OF CALIFORNIA

CALLISONRTKL
A DESIGN CONSULTANCY OF ARCADIS
ARCADIS

NO.	DATE	DESCRIPTION	GM/SPEC	DWN	CHKD	SUPV	APVD BY
0	11/18/2015	FINAL DESIGN	KK	NT	RC	RAO	

REVISIONS

APPROVED BY	
RAO	SO
	SUPV RC
	DSGN CALLISON
	DWN KK
	CHKD NT
	OK
	DATE 11/18/2015
	SCALES 3/16" = 1'-0"

TOPOCK GROUNDWATER REMEDIATION PROJECT
WATER CONDITIONING PLANT
(BUILDING 12)
LEVEL 1 OVERALL FLOOR PLAN
GAS TRANSMISSION & DISTRIBUTION
PACIFIC GAS AND ELECTRIC COMPANY
SAN FRANCISCO, CALIFORNIA

MICROFILM	
BILL OF MATL	
DWG LIST	
SUPSDS	
SUPSD BY	
SHEET NO.	of SHEETS
A-12-07	REV 0

N1808

006-151658.00

COPYRIGHT © 2015 CALLISON

D:\1. LOCAL FILES\3. Mission Critical\Topock\Revit Files\TOPOCK-12_A_2015 edam-2015-11-04.rvt
11/11/2015 2:02:15 PM

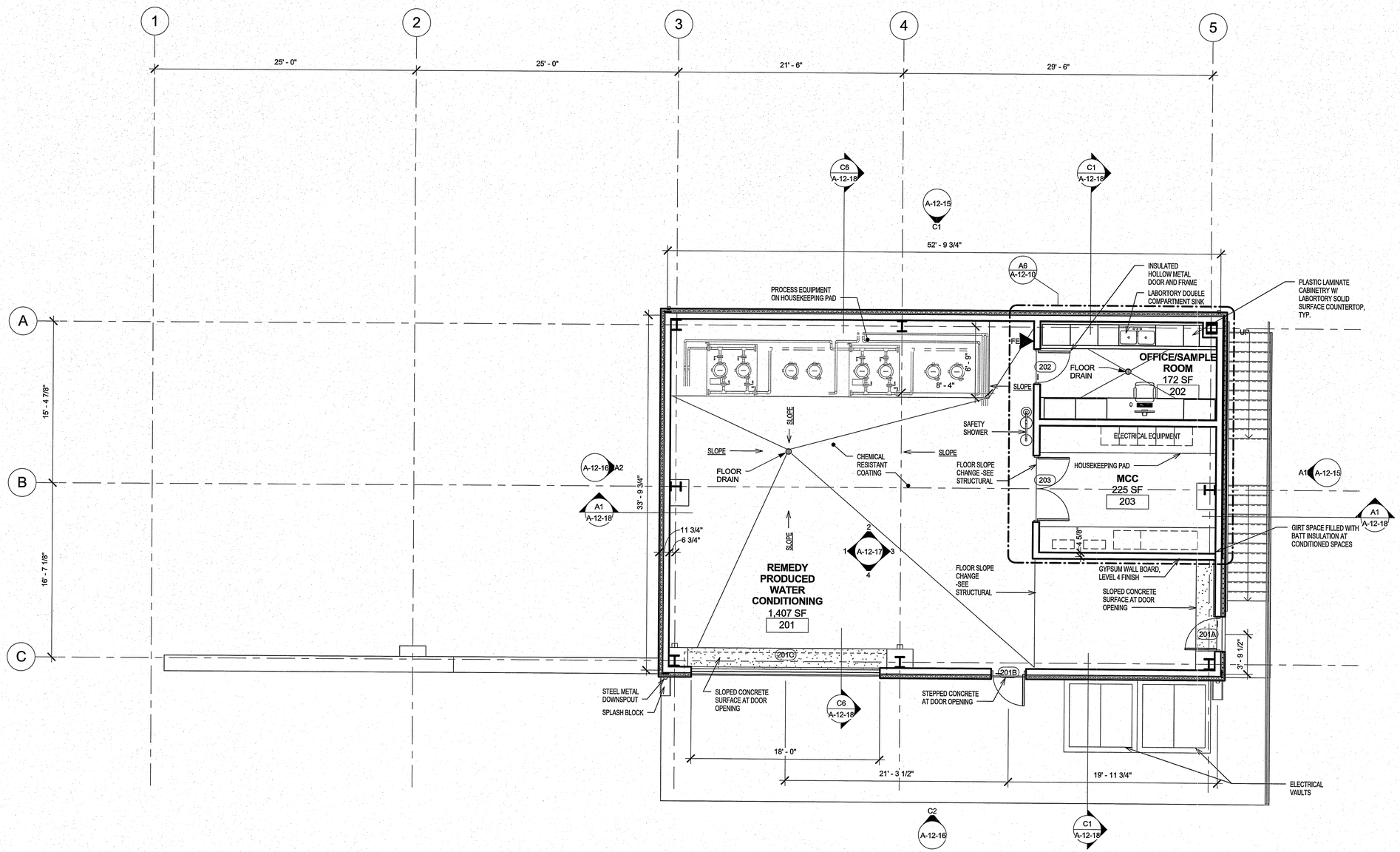

A1 LEVEL 2 OVERALL FLOOR PLAN

3/16" = 1'-0"

SCALE: 3/16" = 1'-0"
AT: 22"x 34"
0 5' 10' 20'

- FINAL DESIGN - FOR AGENCY APPROVAL ONLY

LICENSED ARCHITECT PAUL R. MAROWICZ C-33907 6-30-17 RENEWAL DATE STATE OF CALIFORNIA

CALLISONRTKL A DESIGN CONSULTANCY OF ARCADIS

ARCADIS

NO.	DATE	DESCRIPTION	GM/SPEC	DWN	CHKD	SUPV	APVD BY
0	11/18/2015	FINAL DESIGN		KK	NT	RC	RAO

REVISIONS

APPROVED BY	
RAO	SO
	SUPV RC
	DSGN CALLISON
	DWN KK
	CHKD NT
	OK
	DATE 11/18/2015
	SCALES 3/16" = 1'-0"

TOPOCK GROUNDWATER REMEDIATION PROJECT
WATER CONDITIONING PLANT (BUILDING 12)
LEVEL 2 OVERALL FLOOR PLAN
GAS TRANSMISSION & DISTRIBUTION
PACIFIC GAS AND ELECTRIC COMPANY
SAN FRANCISCO, CALIFORNIA

MICROFILM	
BILL OF MATL	
DWG LIST	
SUPSDS	
SUPSD BY	
SHEET NO.	of SHEETS
A-12-08	REV 0

N1808

006-151658.00

COPYRIGHT © 2015 CALLISON

D:\1. LOCAL FILES\2. Mission Critical\Topock\Revit Files\TOPOCK-12_A_v2015 adam-2015-11-04.rvt 11/11/2015 2:02:18 PM

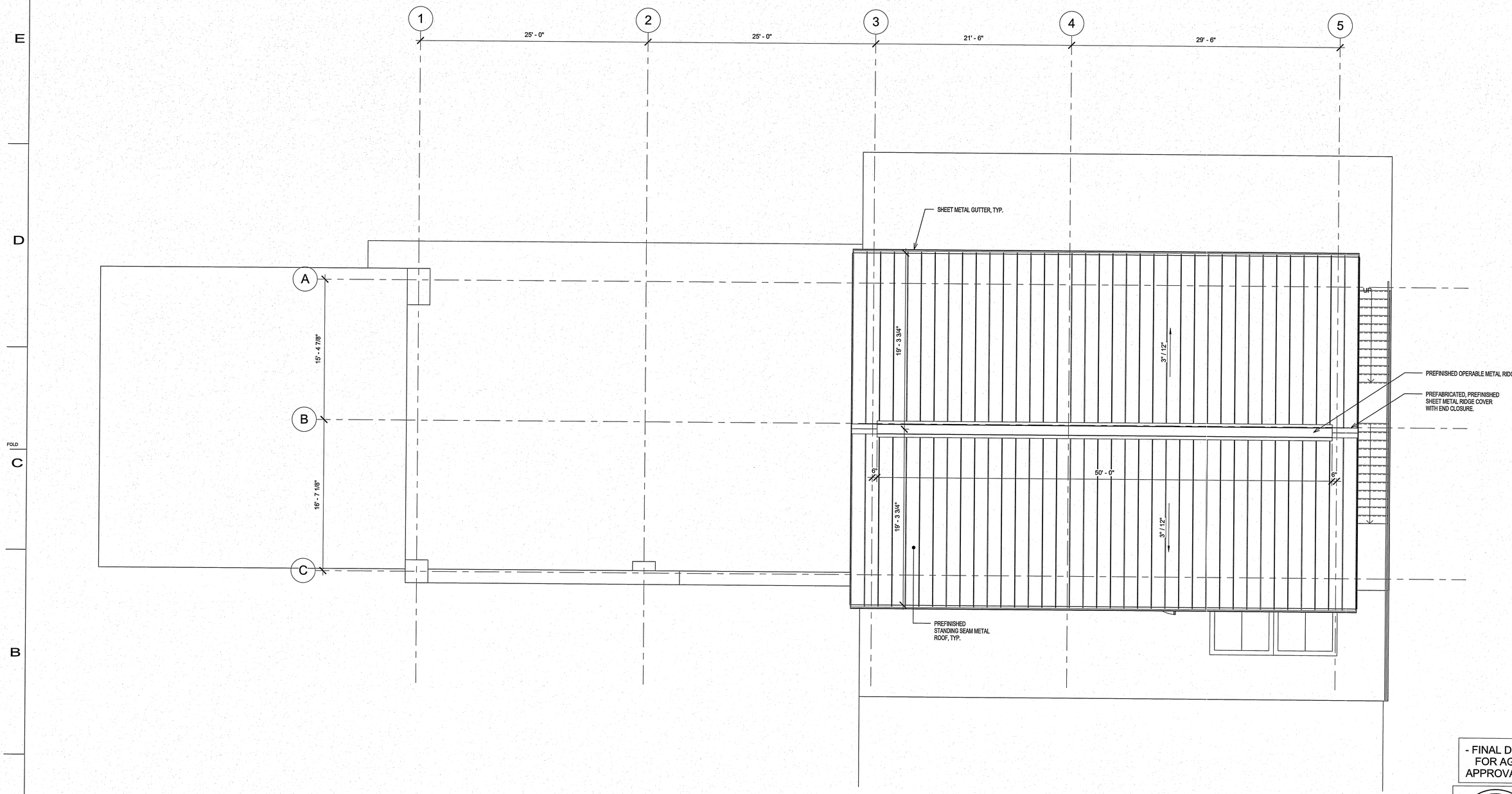

A1 OVERALL ROOF PLAN
3/16" = 1'-0"

SCALE: 3/16" = 1'-0"
AT: 22"x 34"
0 5' 10' 20'

- FINAL DESIGN -
FOR AGENCY APPROVAL ONLY

LICENSED ARCHITECT PAUL A. MAKOWIECKI C-33907 6-30-17 RENEWAL DATE STATE OF CALIFORNIA

CALLISONRTKL
A DESIGN CONSULTANCY OF ARCADIS
ARCADIS

NO.	DATE	DESCRIPTION	GM/SPEC	DWN	CHKD	SUPV	APVD BY
0	11/18/2015	FINAL DESIGN		KK	NT	RC	RAO

REVISIONS

APPROVED BY	
RAO	SO
	SUPV RC
	DSGN CALLISON
	DWN KK
	CHKD NT
	OK
	DATE 11/18/2015
	SCALES 3/16" = 1'-0"

TOPOCK GROUNDWATER REMEDIATION PROJECT
WATER CONDITIONING PLANT
(BUILDING 12)
ROOF PLAN
GAS TRANSMISSION & DISTRIBUTION
PACIFIC GAS AND ELECTRIC COMPANY
SAN FRANCISCO, CALIFORNIA

MICROFILM	
BILL OF MATL	
DWG LIST	
SUPSDS	
SUPSD BY	
SHEET NO.	of SHEETS
A-12-09	REV 0

N1808

006-151658.00

COPYRIGHT © 2015 CALLISON

D:\1. LOCAL FILES\2. Mission Critical\Topock\Revit Files\TOPOCK-12_A_v2015 adam-2015-11-04.rvt 11/17/2015 2:02:17 PM

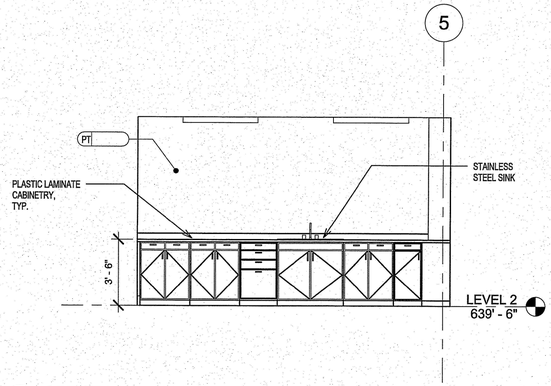

D2 OFFICE INTERIOR ELEVATION 1
1/4" = 1'-0"

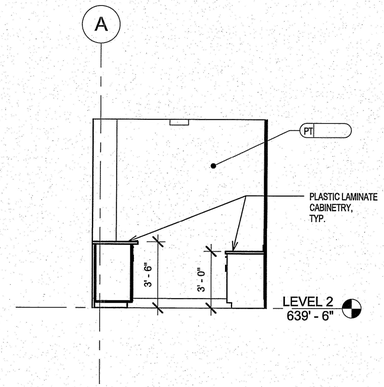

D4 OFFICE INTERIOR ELEVATION 2
1/4" = 1'-0"

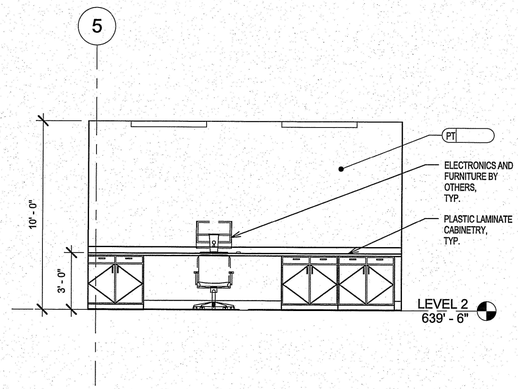

D6 OFFICE INTERIOR ELEVATION 3
1/4" = 1'-0"

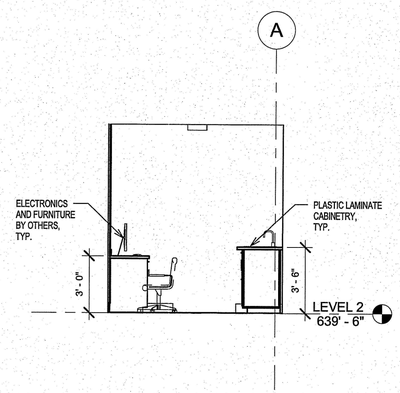

D9 OFFICE INTERIOR ELEVATION 4
1/4" = 1'-0"

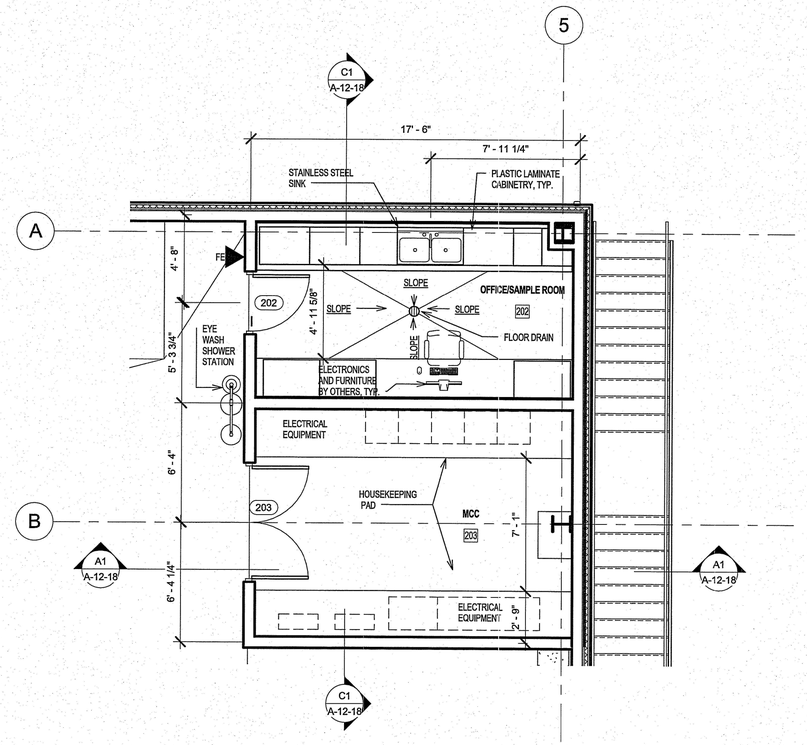

A6 LEVEL 2 OFFICE ENLARGED FLOOR PLAN
1/4" = 1'-0"

SCALE: 3/16" = 1'-0"
AT: 22"x 34"
0 5' 10' 20'

- FINAL DESIGN - FOR AGENCY APPROVAL ONLY

LICENSED ARCHITECT PAUL R. MAKOWICKI C-33907 6-30-17 RENEWAL DATE STATE OF CALIFORNIA

CALLISONRTKL A DESIGN CONSULTANCY OF ARCADIS
ARCADIS

NO.	DATE	DESCRIPTION	GM/SPEC	DWN	CHKD	SUPV	APVD BY
0	11/18/2015	FINAL DESIGN	KK	NT	RC	RAO	

REVISIONS

APPROVED BY	
RAO	
SO	
SUPV	RC
DSGN	CALLISON
DWN	KK
CHKD	NT
OK	
DATE	11/18/2015
SCALES	1/4" = 1'-0"

TOPOCK GROUNDWATER REMEDIATION PROJECT
WATER CONDITIONING PLANT (BUILDING 12)
ENLARGED PLAN & ELEVATIONS
GAS TRANSMISSION & DISTRIBUTION
PACIFIC GAS AND ELECTRIC COMPANY
SAN FRANCISCO, CALIFORNIA

MICROFILM	
BILL OF MATL	
DWG LIST	
SUPSDS	
SUPSD BY	
SHEET NO.	of SHEETS
A-12-10	REV 0

006-151658.00

COPYRIGHT © 2015 CALLISON

N1808

D11 LOCAL FILES\2. Mission Critical\Topock\Revit Files\TOPOCK-12_A_v2016 adam-2015-11-04.rvt
11/17/2015 2:02:15 PM

REFLECTED CEILING LEGEND

PENDANT LIGHT FIXTURE

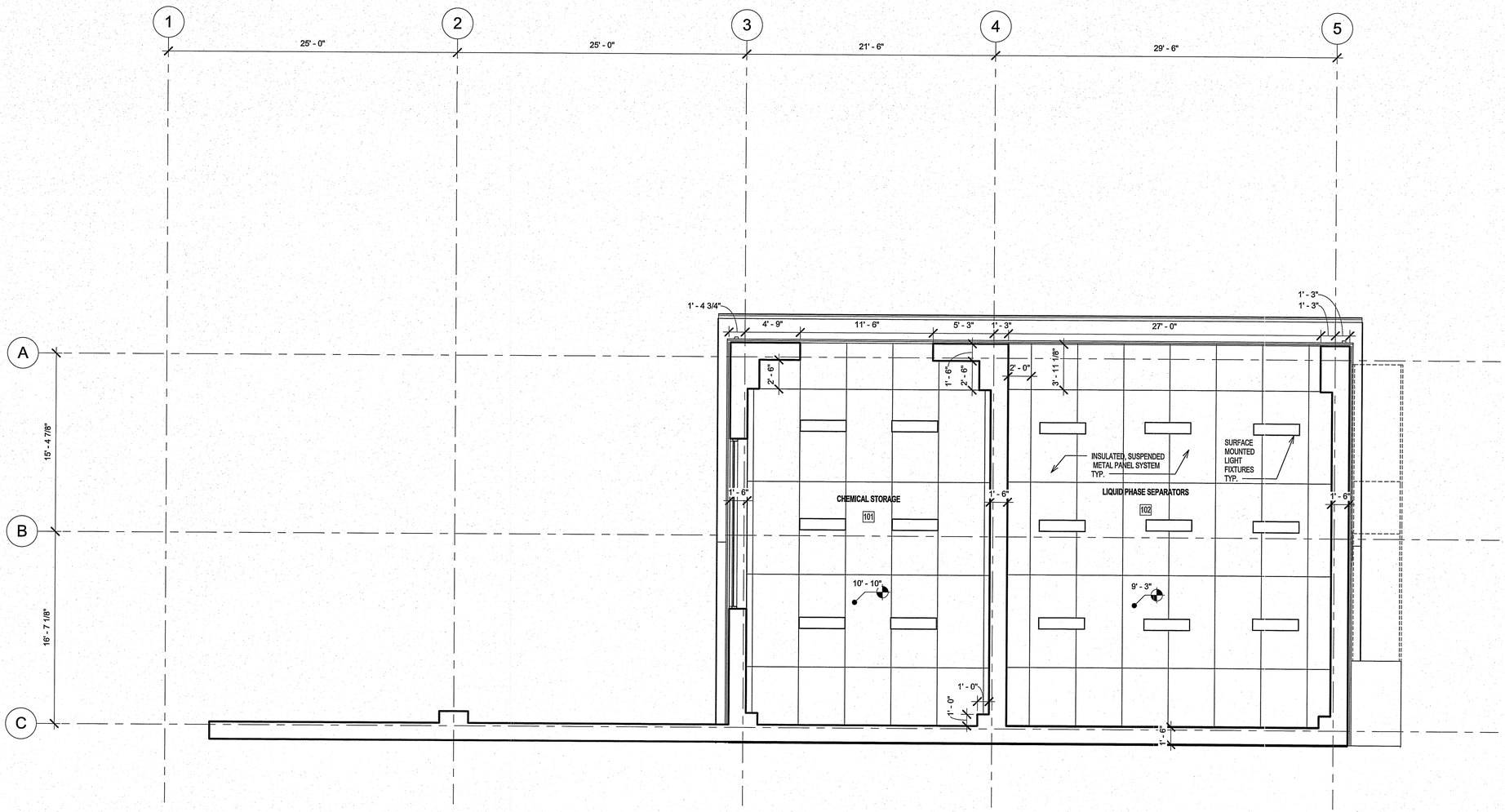

A1 LEVEL 1 OVERALL RCP
3/16" = 1'-0"

SCALE: 3/16" = 1'-0"
AT: 22"x 34"
0 5' 10' 20'

- FINAL DESIGN - FOR AGENCY APPROVAL ONLY

LICENSED ARCHITECT PAUL A. MAKOWICKI C-33907 6-30-17 RENEWAL DATE STATE OF CALIFORNIA

CALLISONRTKL A DESIGN CONSULTANCY OF ARCADIS

ARCADIS

NO.	DATE	DESCRIPTION	GM/SPEC	DWN	CHKD	SUPV	APVD BY
0	11/18/2015	FINAL DESIGN		KK	NT	RC	RAO

REVISIONS

APPROVED BY	
RAO	SO
	SUPV RC
	DSGN CALLISON
	DWN KK
	CHKD NT
	OK
	DATE 11/18/2015
	SCALES As indicated

TOPOCK GROUNDWATER REMEDIATION PROJECT
WATER CONDITIONING PLANT (BUILDING 12)
LEVEL 1 OVERALL RCP
GAS TRANSMISSION & DISTRIBUTION
PACIFIC GAS AND ELECTRIC COMPANY
SAN FRANCISCO, CALIFORNIA

MICROFILM	
BILL OF MATL	
DWG LIST	
SUPSDS	
SUPSD BY	
SHEET NO.	of SHEETS
A-12-11	REV 0

N1808

006-151658.00

COPYRIGHT © 2015 CALLISON

D:\1_LOCAL FILES\2 Master Cells\all Topock\Revit Files\TOPOCK-12_A_v2015 etabs-2015-11-04.rvt 11/11/2015 2:02:19 PM

REFLECTED CEILING LEGEND

PENDANT LIGHT FIXTURE

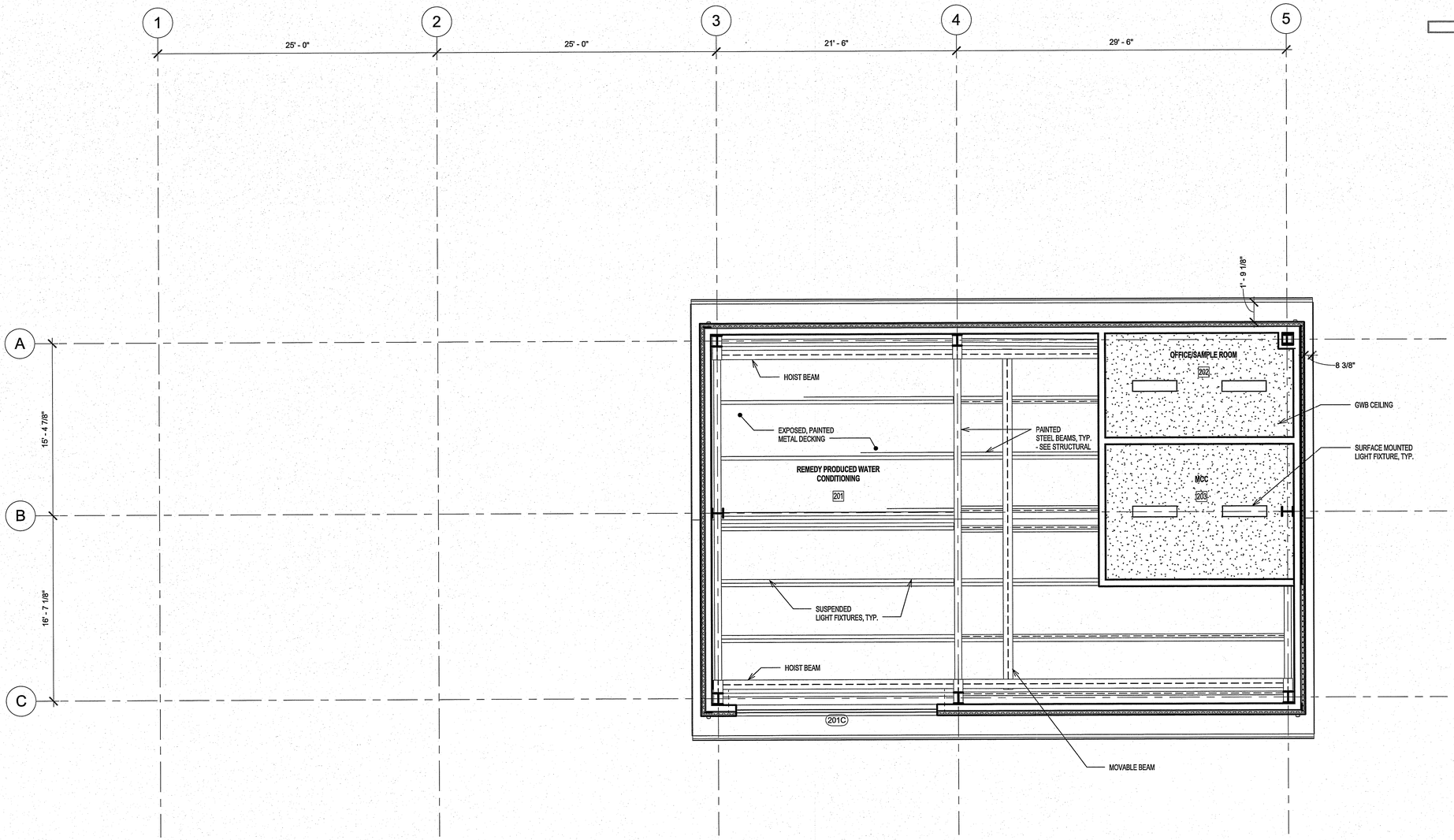

A1 LEVEL 2 OVERALL RCP
3/16" = 1'-0"

SCALE: 3/16" = 1'-0"
AT: 22"x 34"
0 5' 10' 20'

- FINAL DESIGN - FOR AGENCY APPROVAL ONLY

LICENSED ARCHITECT PAUL R. MAKOWICKI C-33907 5-30-17 RENEWAL DATE STATE OF CALIFORNIA

CALLISONRTKL A DESIGN CONSULTANCY OF ARCADIS

ARCADIS

NO.	DATE	DESCRIPTION	GM/SPEC	DWN	CHKD	SUPV	APVD BY
0	11/18/2015	FINAL DESIGN	KK	NT	RC	RAO	

REVISIONS

APPROVED BY		
RAO	SO	
	SUPV	RC
	DSGN	CALLISON
	DWN	KK
	CHKD	NT
	OK	
	DATE	11/18/2015
	SCALES	As indicated

TOPOCK GROUNDWATER REMEDIATION PROJECT
WATER CONDITIONING PLANT (BUILDING 12)
LEVEL 2 OVERALL RCP
GAS TRANSMISSION & DISTRIBUTION
PACIFIC GAS AND ELECTRIC COMPANY
SAN FRANCISCO, CALIFORNIA

MICROFILM	
BILL OF MATL	
DWG LIST	
SUPSDS	
SUPSD BY	
SHEET NO.	of SHEETS
A-12-12	REV 0

N1808

006-151658.00

COPYRIGHT © 2015 CALLISON

D:\1. LOCAL FILES\2. Mission Critical\Topock\Revit Files\TOPOCK-12_A_v2015 adam-2015-11-04.rvt
11/11/2015 2:02:19 PM

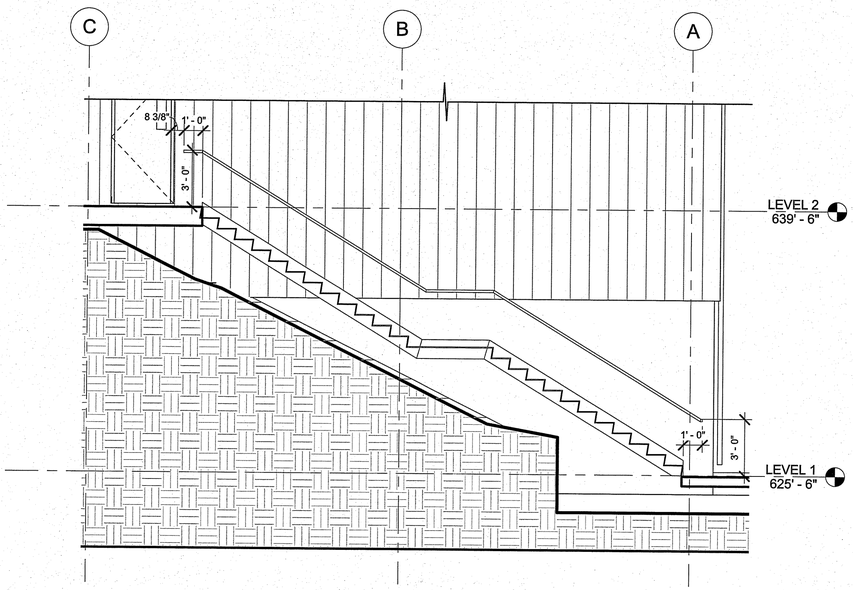

A1 STAIR SECTION
1/4" = 1'-0"

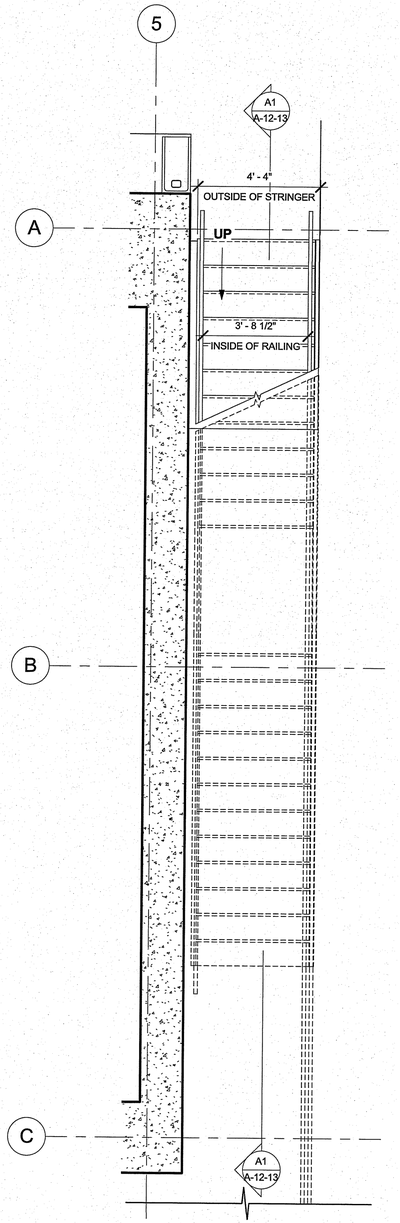

A5 LEVEL 1 STAIR PLAN
3/8" = 1'-0"

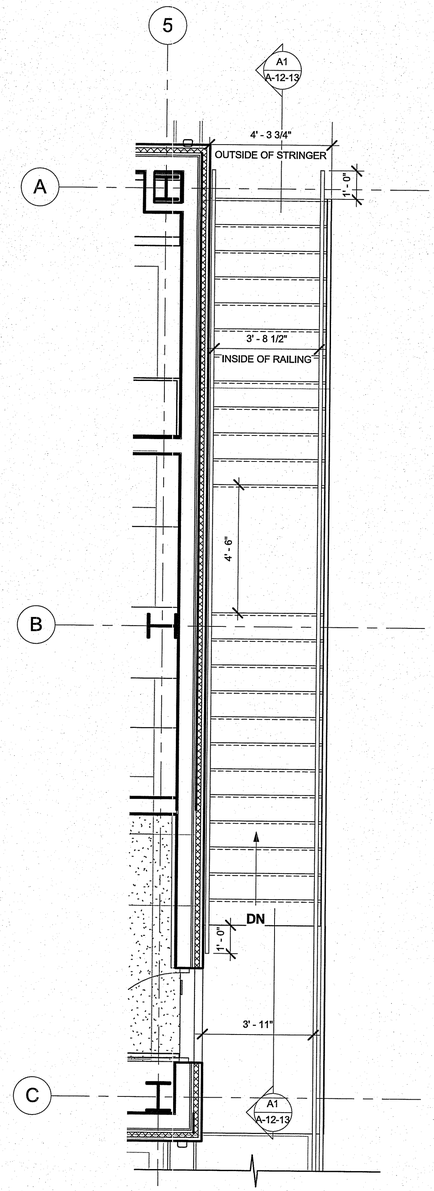

A8 LEVEL 2 STAIR PLAN
3/8" = 1'-0"

SCALE: 3/16" = 1'-0"
AT: 22"x 34"
0 5' 10' 20'

- FINAL DESIGN -
FOR AGENCY
APPROVAL ONLY

LICENSED ARCHITECT
PAUL R. MAKOWICKI
C-33907
6-30-17
RENEWAL DATE
STATE OF CALIFORNIA

CALLISONRTKL
A DESIGN CONSULTANCY OF ARCADIS

ARCADIS

NO.	DATE	DESCRIPTION	GM/SPEC	DWN	CHKD	SUPV	APVD BY
0	11/18/2015	FINAL DESIGN		KK	NT	RC	RAO

REVISIONS

APPROVED BY		
RAO	SO	
	SUPV	RC
	DSGN	CALLISON
	DWN	KK
	CHKD	NT
	OK	
	DATE	11/18/2015
	SCALES	As indicated

TOPOCK GROUNDWATER REMEDIATION PROJECT
WATER CONDITIONING PLANT
(BUILDING 12)
STAIR FLOOR PLANS AND DETAILS
GAS TRANSMISSION & DISTRIBUTION
PACIFIC GAS AND ELECTRIC COMPANY
SAN FRANCISCO, CALIFORNIA

MICROFILM
BILL OF MATL
DWG LIST
SUPSDS
SUPSD BY
SHEET NO. of SHEETS
A-12-13
REV 0

006-151658.00

COPYRIGHT © 2015 CALLISON

D:\1. LOCAL FILES\2. Mission Critical\Topock\Revit Files\TOPOCK-12_A_v2015 adam-2015-11-04.rvt
11/11/2015 2:02:20 PM

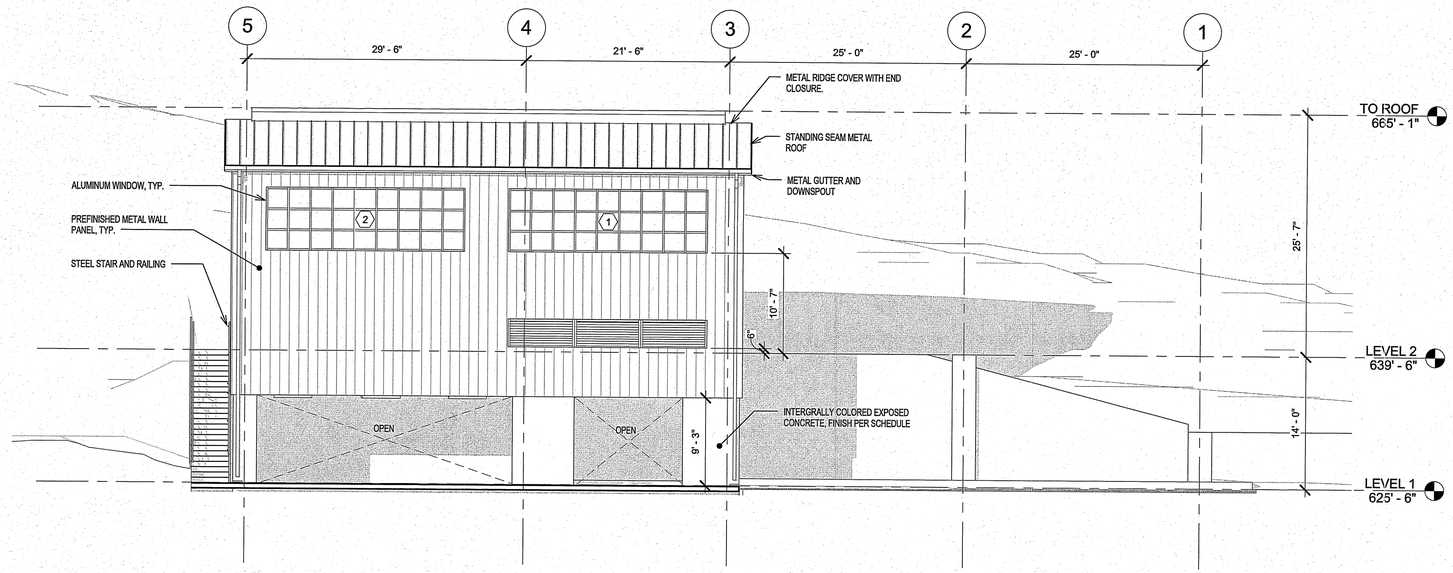

C1 NORTH ELEVATION
1/8" = 1'-0"

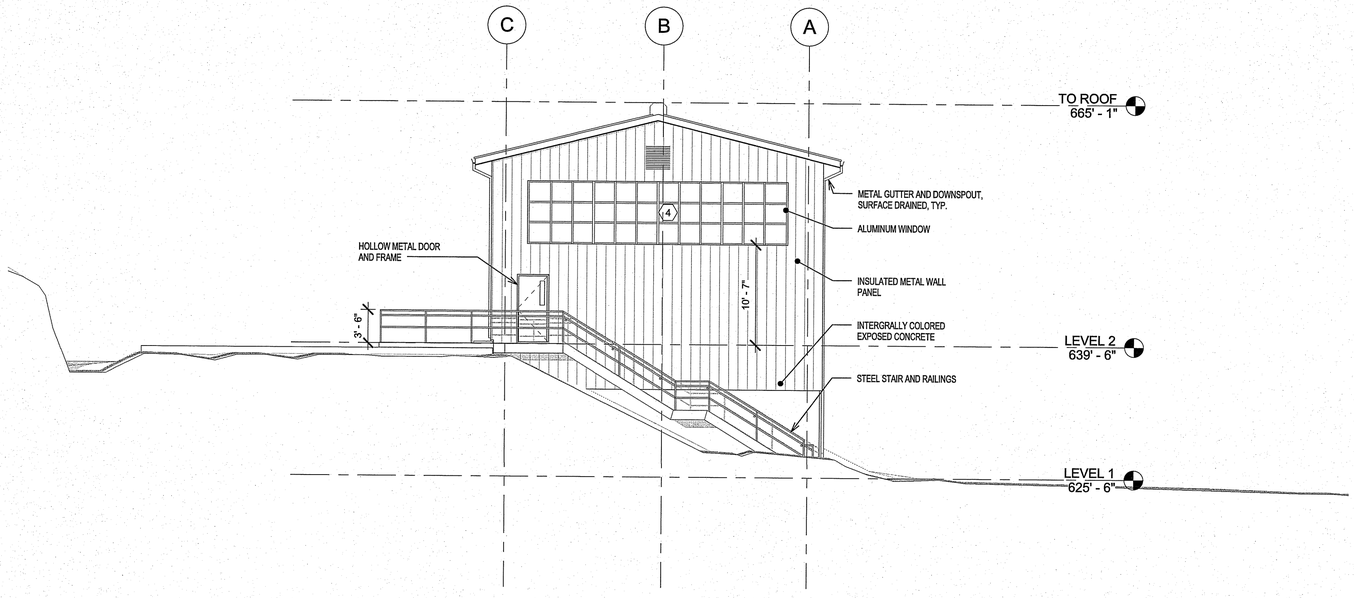

A1 EAST ELEVATION
1/8" = 1'-0"

SCALE: 1/8" = 1'-0"
AT: 22"x 34"
0 7'6" 15' 30'

- FINAL DESIGN - FOR AGENCY APPROVAL ONLY

LICENSED ARCHITECT PAUL R. MAKOWICKI C-33907 6-30-17 RENEWAL DATE STATE OF CALIFORNIA

CALLISONRTKL
A DESIGN CONSULTANCY OF ARCADIS
ARCADIS

NO.	DATE	DESCRIPTION	GM/SPEC	DWN	CHKD	SUPV	APVD BY
0	11/18/2015	FINAL DESIGN		KK	NT	RC	RAO

REVISIONS

APPROVED BY	
RAO	SO
	SUPV RC
	DSGN CALLISON
	DWN KK
	CHKD NT
	OK
	DATE 11/18/2015
	SCALES 1/8" = 1'-0"

TOPOCK GROUNDWATER REMEDIATION PROJECT
WATER CONDITIONING PLANT (BUILDING 12)
OVERALL EXTERIOR ELEVATIONS
GAS TRANSMISSION & DISTRIBUTION
PACIFIC GAS AND ELECTRIC COMPANY
SAN FRANCISCO, CALIFORNIA

MICROFILM	
BILL OF MATL	
DWG LIST	
SUPSDS	
SUPSD BY	
SHEET NO.	of SHEETS
A-12-15	REV 0

N1608
006-151658.00
COPYRIGHT © 2015 CALLISON
D31 LOCAL FILES\ Master Office\Topock\Revit Files\TOPOCK-15_A_v2015 adam 2015-11-04.rvt
11/11/2015 2:02:27 PM

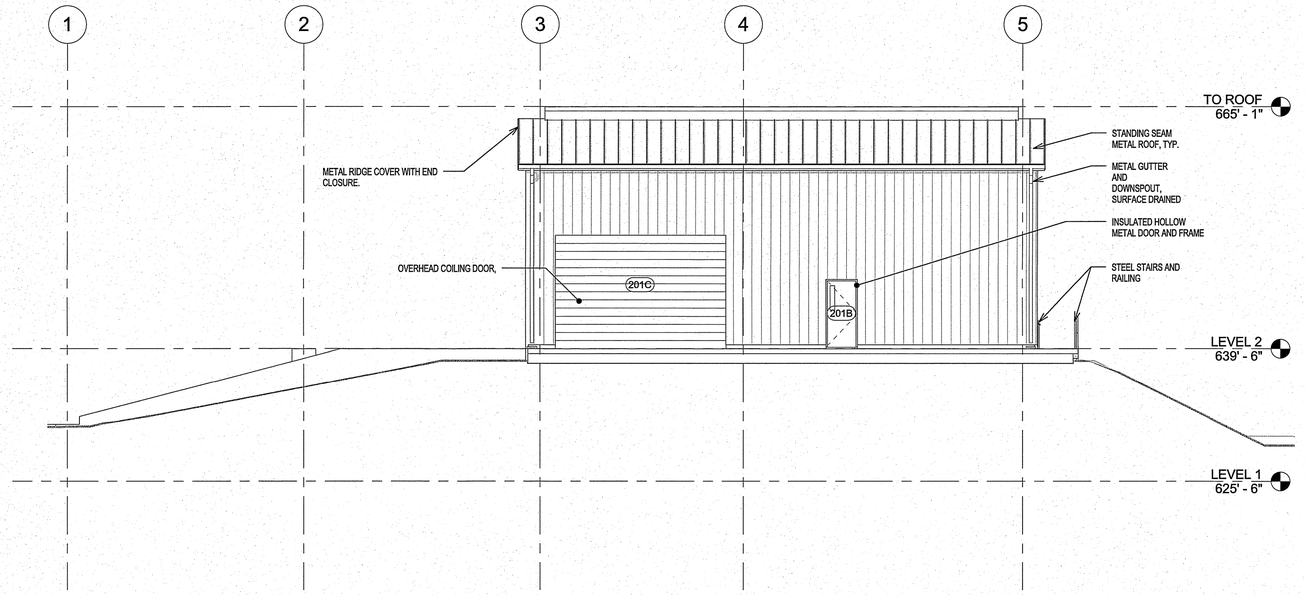

C2 SOUTH ELEVATION
1/8" = 1'-0"

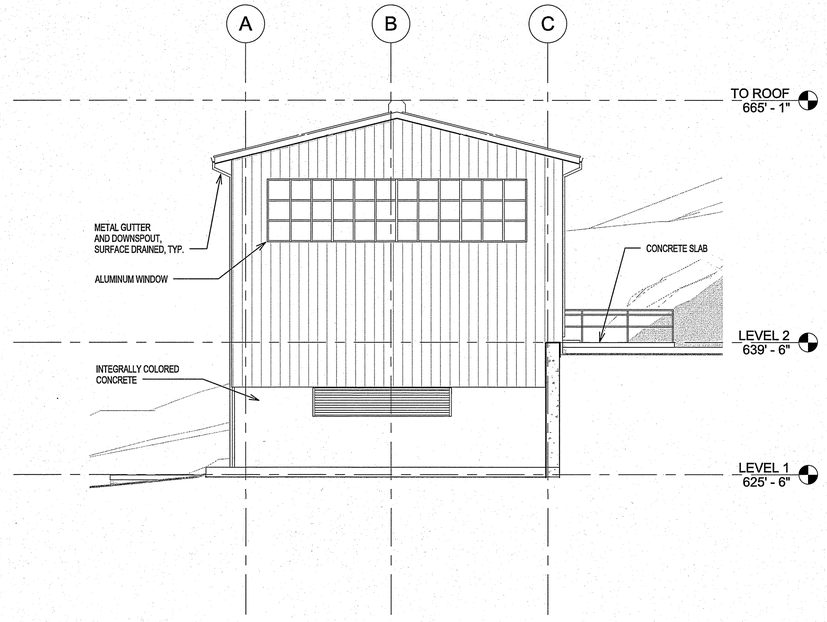

A2 WEST ELEVATION
1/8" = 1'-0"

SCALE: 1/8" = 1'-0"
AT: 22"x 34"
0 7'6" 15' 30'

- FINAL DESIGN - FOR AGENCY APPROVAL ONLY

LICENSED ARCHITECT
PAUL R. MAKOWSKI
C-33907
6-30-17
RENEWAL DATE
STATE OF CALIFORNIA

CALLISONRTKL
A DESIGN CONSULTANCY OF ARCADIS
ARCADIS

NO.	DATE	DESCRIPTION	GM/SPEC	DWN	CHKD	SUPV	APVD BY
REVISIONS							
0	11/18/2015	FINAL DESIGN		KK	NT	RC	RAO

APPROVED BY		
RAO	SO	
	SUPV	RC
	DSGN	CALLISON
	DWN	KK
	CHKD	NT
	OK	
	DATE	11/18/2015
	SCALES	1/8" = 1'-0"

TOPOCK GROUNDWATER REMEDIATION PROJECT
WATER CONDITIONING PLANT (BUILDING 12)
OVERALL EXTERIOR ELEVATIONS
GAS TRANSMISSION & DISTRIBUTION
PACIFIC GAS AND ELECTRIC COMPANY
SAN FRANCISCO, CALIFORNIA

MICROFILM	
BILL OF MATL	
DWG LIST	
SUPSDS	
SUPSD BY	
SHEET NO.	of SHEETS
A-12-16	REV 0

N1808

006-191658.00

COPYRIGHT © 2015 CALLISON

Dir1: LOCAL FILES\2. Mission Critical\Topock\Revit Files\TOPOCK-12_A_v2015 adam-2016-11-04.rvt
11/18/2015 2:02:31 PM

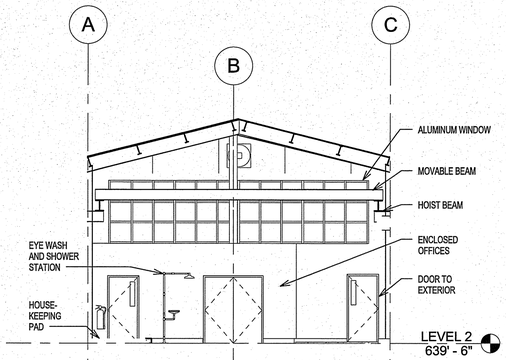

3 EAST WATER CONDITIONING ELEVATION
1/8" = 1'-0"

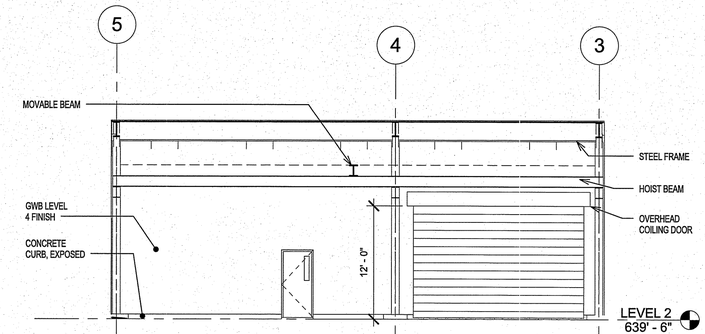

4 SOUTH WATER CONDITIONING ELEVATION
1/8" = 1'-0"

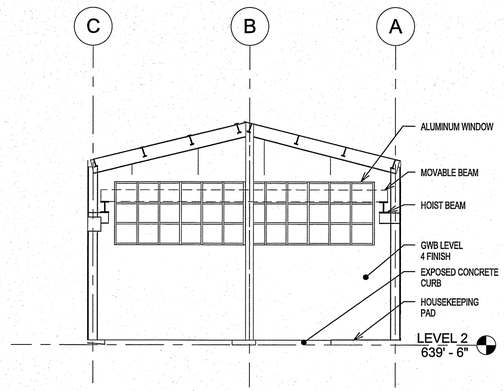

1 WEST WATER CONDITIONING ELEVATION
1/8" = 1'-0"

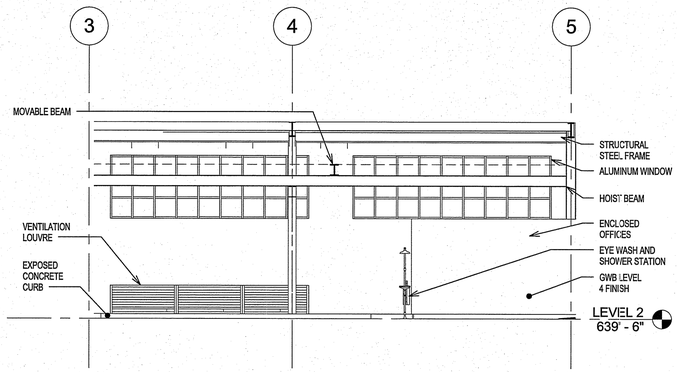

2 NORTH WATER CONDITIONING ELEVATION
1/8" = 1'-0"

- FINAL DESIGN - FOR AGENCY APPROVAL ONLY

LICENSED ARCHITECT PAUL R. MAKOWSKI C-33907 6-30-17 RENEWAL DATE STATE OF CALIFORNIA

SCALE: 1/8" = 1'-0"
AT: 22"x 34" 0 7'6" 15' 30'

CALLISONRTKL A DESIGN CONSULTANCY OF ARCADIS

ARCADIS

NO.	DATE	DESCRIPTION	GM/SPEC	DWN	CHKD	SUPV	APVD BY
0	11/18/2015	FINAL DESIGN		KK	NT	RC	RAO

REVISIONS

APPROVED BY	
RAO	

SO	
SUPV	RC
DSGN	CALLISON
DWN	KK
CHKD	NT
OK	
DATE	11/18/2015
SCALES	1/8" = 1'-0"

TOPOCK GROUNDWATER REMEDIATION PROJECT
WATER CONDITIONING PLANT (BUILDING 12) INTERIOR ELEVATIONS
GAS TRANSMISSION & DISTRIBUTION
PACIFIC GAS AND ELECTRIC COMPANY
SAN FRANCISCO, CALIFORNIA

MICROFILM	
BILL OF MATL	
DWG LIST	
SUPSDS	
SUPSD BY	
SHEET NO.	of SHEETS
A-12-17	REV 0

006-151658.00

COPYRIGHT © 2015 CALLISON

N1608

D:\1 LOCAL FILES\2 Master Cities\Topock\Revit Files\TOPOCK-12_A_v2015 adam.2015-11-04.rvt 11/11/2015 2:02:33 PM

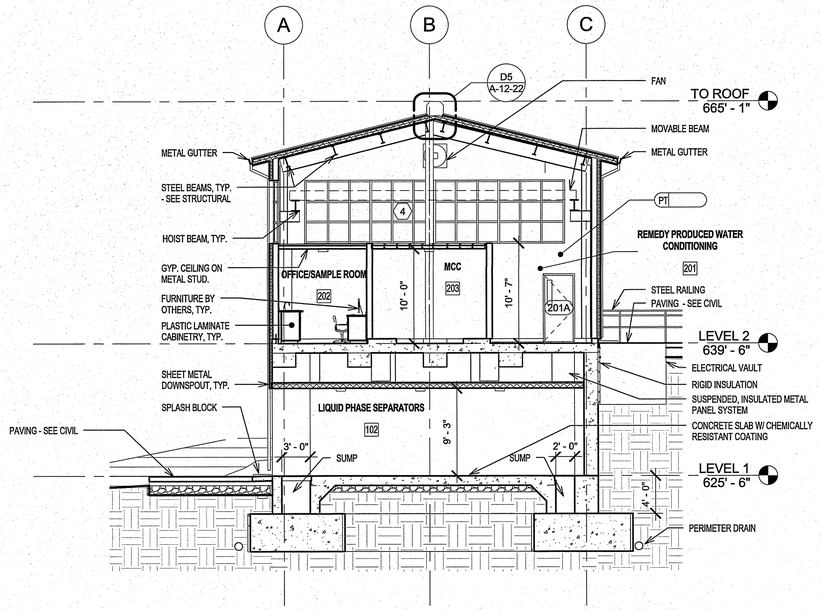

C1 OVERALL BUILDING SECTION 2
1/8" = 1'-0"

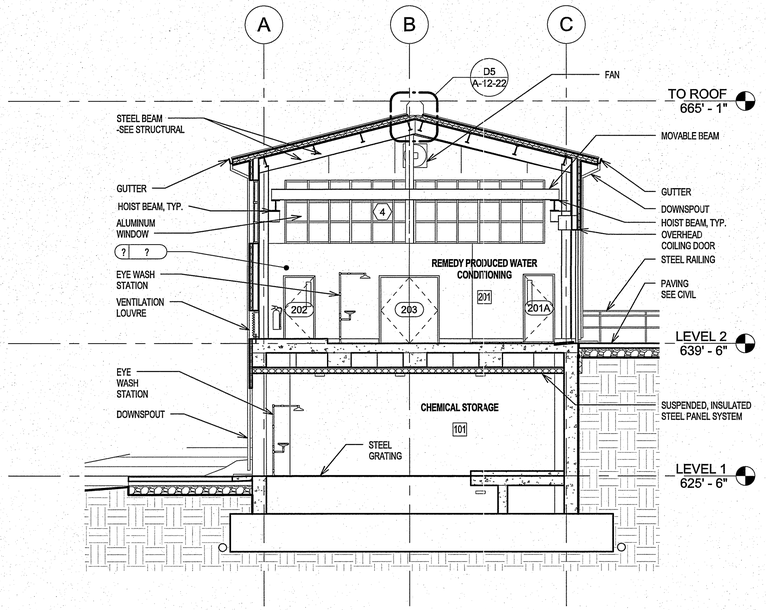

C6 OVERALL BUILDING SECTION 3
1/8" = 1'-0"

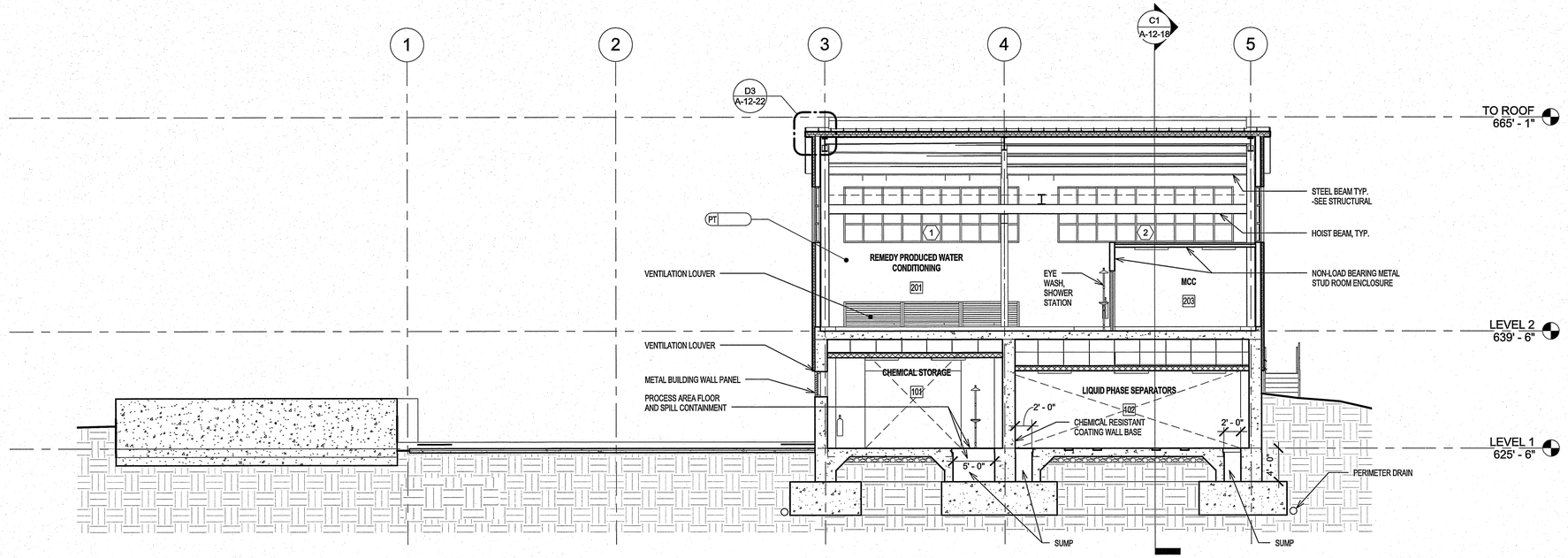

A1 OVERALL BUILDING SECTION 1
1/8" = 1'-0"

SCALE: 1/8" = 1'-0"
AT: 22"x 34"
0 7'6" 15' 30'

- FINAL DESIGN -
FOR AGENCY
APPROVAL ONLY

LICENSED ARCHITECT
PAUL R. MARONIEW
C-33907
6-30-17
RENEWAL
DATE
STATE OF CALIFORNIA

CALLISONRTKL
A DESIGN CONSULTANCY OF ARCADIS
ARCADIS

NO.	DATE	DESCRIPTION	GM/SPEC	DWN	CHKD	SUPV	APVD BY
REVISIONS							
0	11/18/2015	FINAL DESIGN	KK	NT	RC	RAO	
REVISIONS							

APPROVED BY		
RAO	SO	
	SUPV	RC
	DSGN	CALLISON
	DWN	KK
	CHKD	NT
	OK	
	DATE	11/18/2015
	SCALES	1/8" = 1'-0"

TOPOCK GROUNDWATER REMEDIATION PROJECT
WATER CONDITIONING PLANT (BUILDING 12)
OVERALL BUILDING SECTIONS
GAS TRANSMISSION & DISTRIBUTION
PACIFIC GAS AND ELECTRIC COMPANY
SAN FRANCISCO, CALIFORNIA

MICROFILM	
BILL OF MATL	
DWG LIST	
SUPSDS	
SUPSD BY	
SHEET NO.	of SHEETS
A-12-18	REV 0

006-151658.00

COPYRIGHT © 2015 CALLISON

N1808

D:\1. LOCAL FILES\2. Mission Critical\Topock\Revit Files\TOPOCK-12_A_v2015 admin-2015-11-04.rvt
11/17/2015 2:03:38 PM

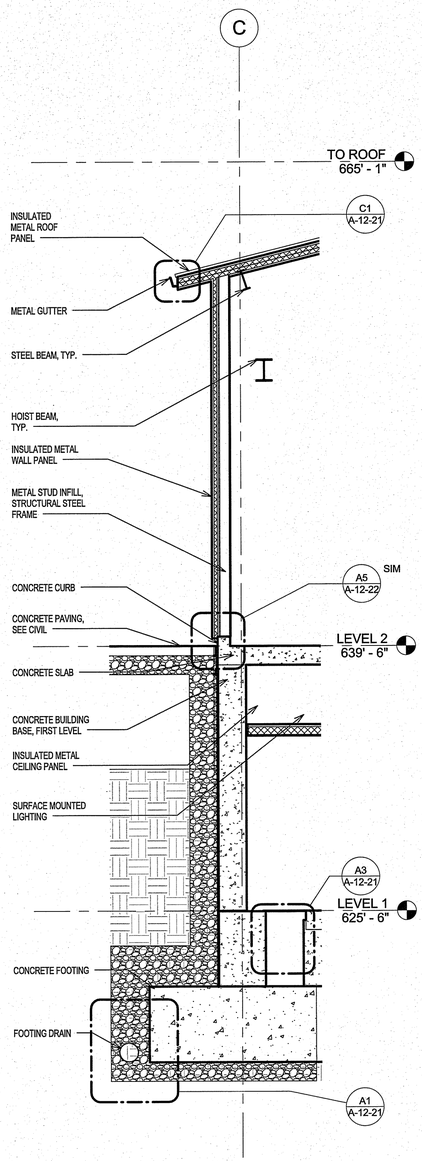

A1 WALL SECTION 4
1/4" = 1'-0"

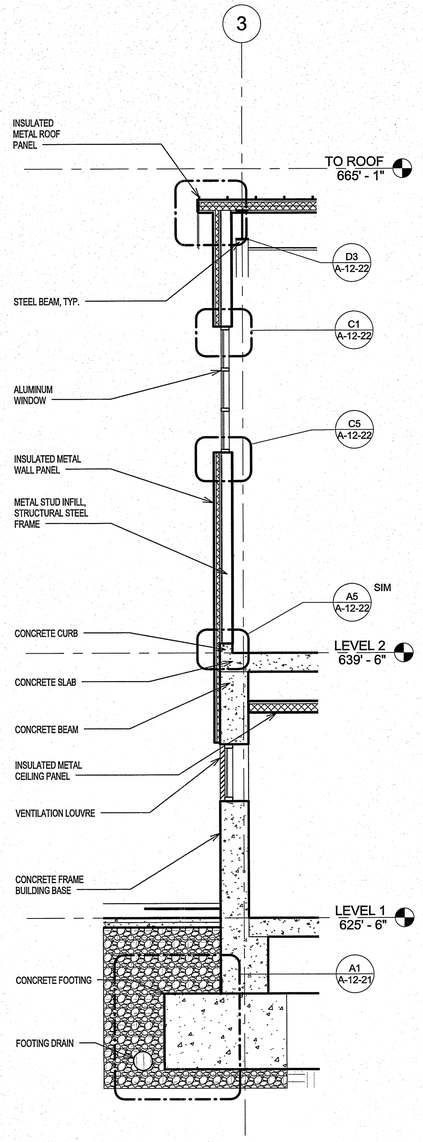

A4 WALL SECTION 3
1/4" = 1'-0"

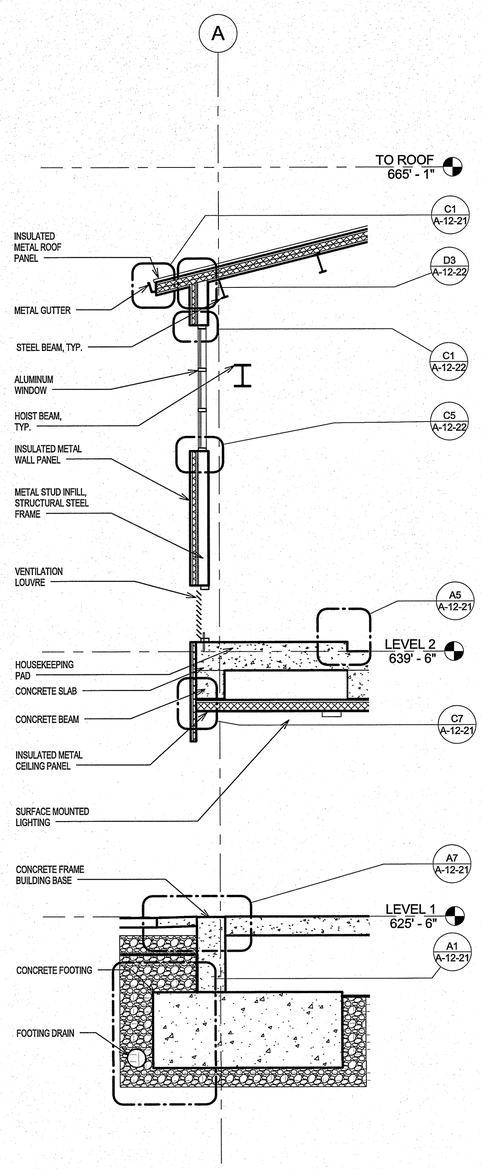

A6 WALL SECTION 2
1/4" = 1'-0"

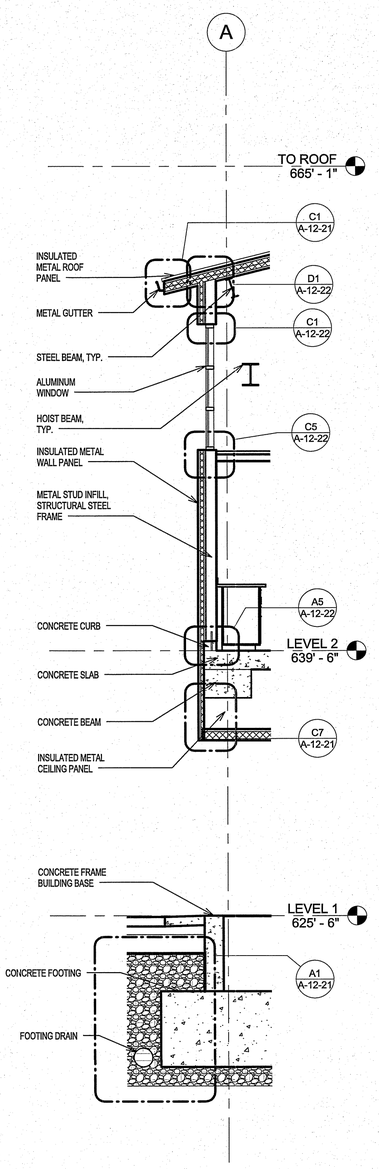

A9 WALL SECTION 1
1/4" = 1'-0"

- FINAL DESIGN -
FOR AGENCY
APPROVAL ONLY

LICENSED ARCHITECT
PAUL R. MAKOWICKI
C-33907
6-30-17
RENEWAL
DATE
STATE OF CALIFORNIA

CALLISONRTKL
A DESIGN CONSULTANCY OF ARCADIS

ARCADIS

NO.	DATE	DESCRIPTION	GM/SPEC	DWN	CHKD	SUPV	APVD BY
0	11/18/2015	FINAL DESIGN	KK	NT	RC	RAO	

REVISIONS

APPROVED BY		
RAO	SO	
	SUPV	RC
	DSGN	CALLISON
	DWN	KK
	CHKD	NT
	OK	
	DATE	11/18/2015
	SCALES	1/4" = 1'-0"

TOPOCK GROUNDWATER REMEDIATION PROJECT
WATER CONDITIONING PLANT (BUILDING 12)
WALL SECTIONS
GAS TRANSMISSION & DISTRIBUTION
PACIFIC GAS AND ELECTRIC COMPANY
SAN FRANCISCO, CALIFORNIA

MICROFILM	
BILL OF MATL	
DWG LIST	
SUPSDS	
SUPSD BY	
SHEET NO.	of SHEETS
A-12-19	REV 0

N1808

006-151658.80

COPYRIGHT © 2015 CALLISON

D:\1. LOCAL FILES\2. Master Cells\all Topock\Revit Files\TOPOCK-12_A_v2015 adam-2015-11-04.rvt
11/11/2015 2:03:39 PM

NOTE: ALL PARTITIONS HERE MAY BE MASONRY OR FRAMING WITH FINISH MATERIALS. SEE PARTITION-TYPE INDICATOR FOR SPECIFIC CONSTRUCTION.

FRAMED PARTITIONS WITH FINISH MATERIALS ARE GRAPHICALLY INDICATED HERE FOR CLARITY IN REFERENCING DETAILS AND FRAMING ATTACHMENTS. FOR TOPS AND BOTTOMS OF MASONRY PARTITIONS, SEE STRUCTURAL DRAWINGS.

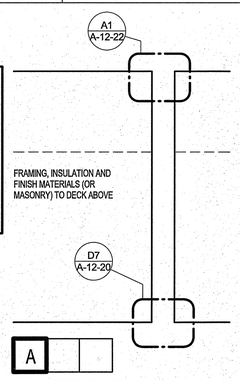

NON-FIRE RATED
FULL-HEIGHT PARTITION

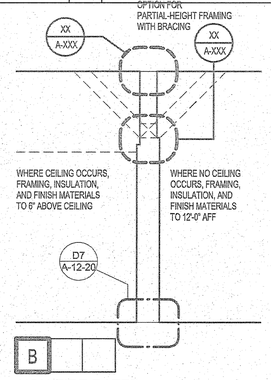

NON-FIRE RATED
PARTITION WITH PARTIAL-HEIGHT FINISH MATERIALS

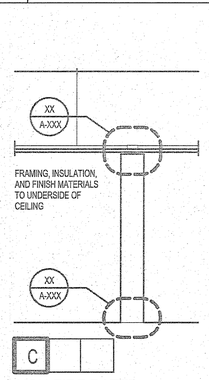

NON-FIRE RATED
PARTITION BRACED AT CEILING

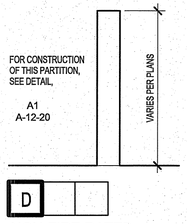

NON-FIRE RATED
PARTIAL-HEIGHT PARTITION

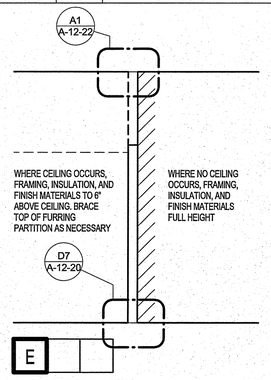

NON-FIRE RATED
FURRING PARTITION

D1 PARTITIONAL CONFIGURATIONS
3/4" = 1'-0"

C1010FP-03

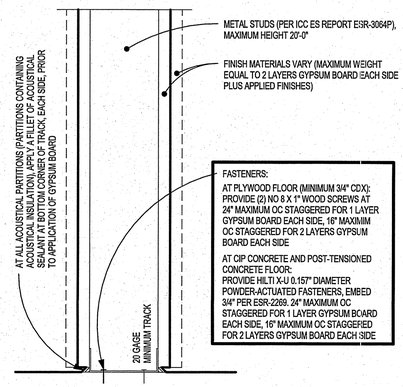

D7 PTN-TO-FLR CONNECTION FOR SEISMIC SITUATIONS
3" = 1'-0"

C1010FP-08

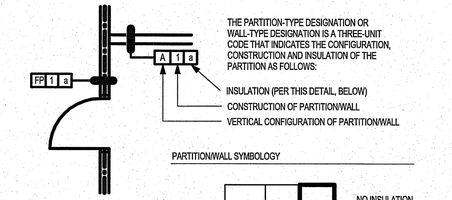

NOTES:
1. SEE SPECIFICATION FOR STUD SPACING AND GAGE.
2. WHERE FIRE AND/OR SOUND RATINGS ARE INDICATED, THE GYPSUM BOARD REQUIRED SHALL BE CONTINUOUS BEHIND ABUTTING NONRATED PARTITIONS SO THAT FIRE AND/OR ACOUSTIC PERFORMANCE IS NOT COMPROMISED.

D9 PARTITION-TYPE LEGEND
12" = 1'-0"

C1010FP-01

GENERAL NOTES:

20 GAGE MINIMUM DEEP LEG TRACK OR SLOTTED TRACK TO ALLOW 3/4" DEFLECTION. MAINTAIN DEFLECTION CAPACITY AND FIRE-RATING AT ALL STRUCTURAL MEMBERS

STUDS CUT 3/4" SHORT TO ALLOW 3/4" DEFLECTION

AT TOP OF FINISH MATERIALS (WHERE OCCURS) PROVIDE 3/4" CLEAR SPACE TO ALLOW 3/4" DEFLECTION. DO NOT SCREW FINISH MATERIALS INTO TOP TRACK - FASTEN INTO STUDS ONLY

APPLY OR PATCH FIREPROOFING (WHERE FIREPROOFING IS REQUIRED) AFTER INSTALLATION OF TRACK OR STRAPS

AT PARTITIONS WITH ACOUSTICAL INSULATION, INSTALL GYPSUM BOARD 2" SHORT TO ACCOMMODATE LARGER ACOUSTICAL SEALANT JOINT NEEDED TO ACHIEVE 3/4" DEFLECTION

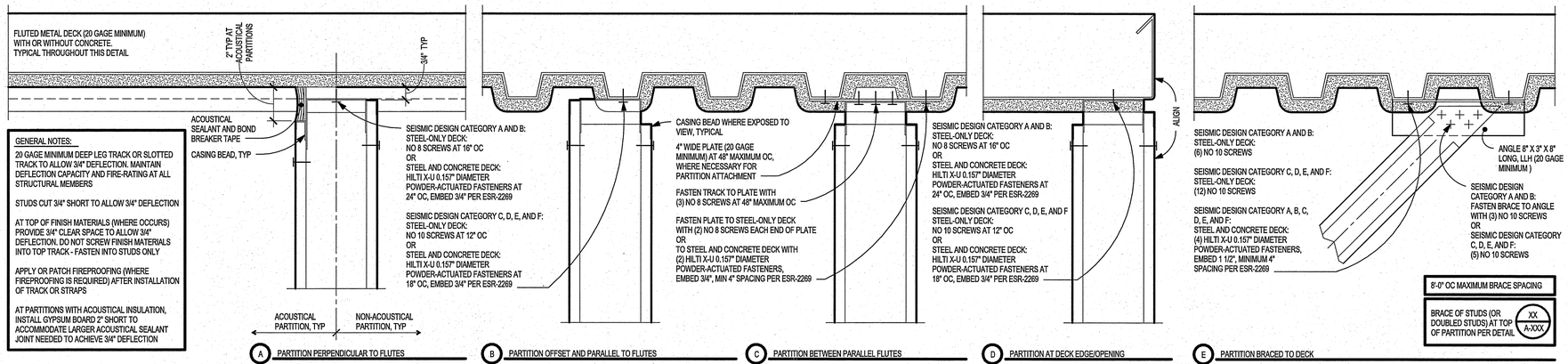

C1 INTERSECTION OF NON-RATED PARTITIONS WITH FLUTED METAL DECK ABOVE
3" = 1'-0"

C1010FP-25

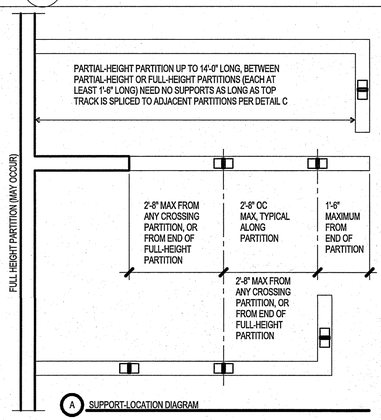

NOTES:
PROVIDE GYPSUM BOARD ON BOTH SIDES OF STUDS

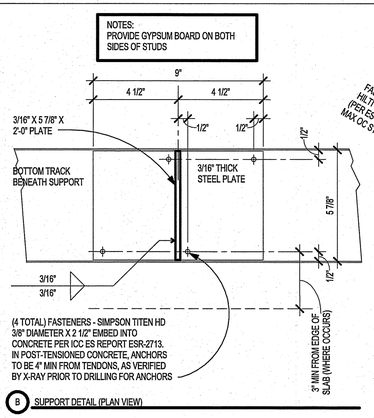

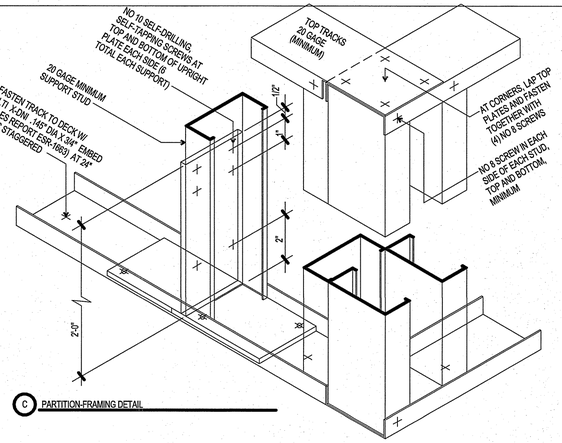

A1 SUPPORTS REQUIRED FOR PARTIAL-HEIGHT PARTITIONS USING 6" STUDS
3" = 1'-0"

C1010FP-06

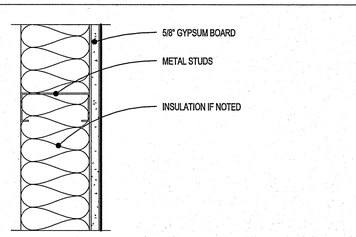

PARTITION
NO SCALE

C1010FP-21

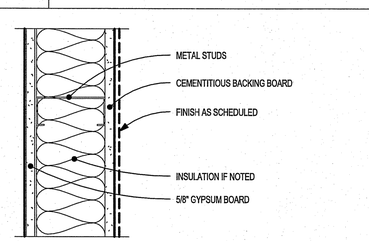

PARTITION
NO SCALE

C1010FP-20

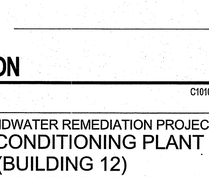

CONCRETE WALL
NO SCALE

C1010FP-42

- FINAL DESIGN - FOR AGENCY APPROVAL ONLY

LICENSED ARCHITECT PAUL A. MAKOWSKI C-33907 6-30-17 RENEWAL DATE STATE OF CALIFORNIA

CALLISONRTKL A DESIGN CONSULTANCY OF ARCADIS

ARCADIS

NO.	DATE	DESCRIPTION	GM/SPEC	DWN	CHKD	SUPV	APVD BY
0	11/18/2015	FINAL DESIGN		KK	NT	RC	RAO

REVISIONS

APPROVED BY	
RAO	

SO	
SUPV	RC
DSGN	CALLISON
DWN	KK
CHKD	NT
OK	
DATE	11/18/2015
SCALES	As indicated

TOPOCK GROUNDWATER REMEDIATION PROJECT
WATER CONDITIONING PLANT
(BUILDING 12)
WALL/PARTITION TYPES
GAS TRANSMISSION & DISTRIBUTION
PACIFIC GAS AND ELECTRIC COMPANY
SAN FRANCISCO, CALIFORNIA

MICROFILM	
BILL OF MATL	
DWG LIST	
SUPSDS	
SUPSD BY	
SHEET NO.	of SHEETS
A-12-20	REV 0

006-1516SB.00

COPYRIGHT © 2015 CALLISON

N1808

D:\1 LOCAL FILES\2. Mission Critical\Topock\Revit Files\TOPOCK-12_A_r2015 adam-2015-11-04.rvt 11/11/2015 2:03:37 PM

DOOR SCHEDULE

Number	Location	DOOR OPENING Width	DOOR OPENING Height	DOOR OPENING Thickness	DOOR Type	DOOR Material	DOOR FINISH	FRAME Type	FRAME Material	FRAME Finish	DETAIL Head Detail	DETAIL Jamb Detail	DETAIL Sill Detail	Hardware	Glass Type	Fire Rating	LSS CODE	Keynote
201A	REMEDY PRODUCED WATER CONDITIONING	3' - 0"	7' - 0"	1 3/4"	B	HM	PT	1	HM	PT					SEE SPEC			
201B	REMEDY PRODUCED WATER CONDITIONING	3' - 0"	7' - 0"	1 3/4"	B	HM	PT	1	HM	PT					SEE SPEC			
201C	REMEDY PRODUCED WATER CONDITIONING	18' - 0"	12' - 0"	2"	C	ALUM	PT		STEEL	PT							PERFORATED	
202	OFFICE/LAB	3' - 0"	7' - 0"	1 3/4"	A	HM	PT	1	HM	PT								
203	MCC	6' - 0"	7' - 0"	1 3/4"	A	HM	PT	1	HM	PT								

WINDOW SCHEDULE

Mark	Count	Sill	Width	Area	Comments	Family	Type	Height
1	1	WINDOW A	21' - 0"	140 SF	Window	Curtain Wall	A	6' - 8"
2	1	WINDOW A	21' - 0"	140 SF	Window	Curtain Wall	A	6' - 8"
4	1	WINDOW A	27' - 6"	183 SF	Window	Curtain Wall	A	6' - 8"
	1	WINDOW A	27' - 6"	183 SF	Window	Curtain Wall	A	6' - 8"

DOOR TYPES

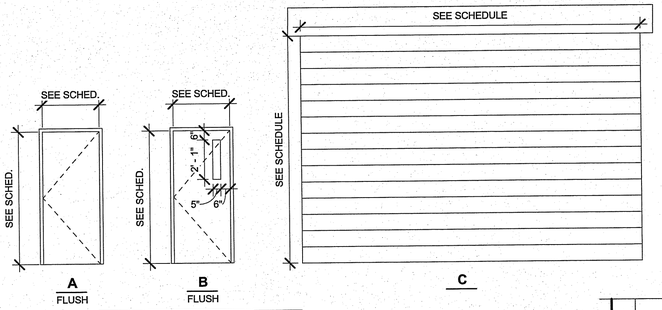

FRAME TYPES

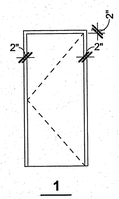

WINDOW TYPES

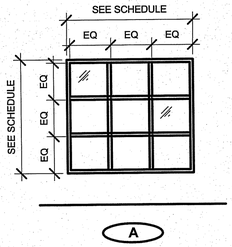

HARDWARE

HARDWARE GROUP	GROUP ITEMS
HW001	ELECTRIC HINGE BUTT HINGES CARD READER (BY SECURITY) ELECTRIC LOCKSET - F82B FUNCTION CYLINDER DOOR POSITION MONITORING SWITCH (BY SECURITY) THRESHOLD BALANCE OF FINISH HARDWARE BY ALUMINUM ENTRANCE MANUFACTURER NOTE: COORDINATE DOOR AND FRAME PREPARATION AND COMPONENT LOCATIONS WITH SECURITY REQUIREMENTS.
HW002	ELECTRIC HINGE BUTT HINGES CLOSER CARD READER (BY SECURITY) ELECTRIC LOCKSET – F82B FUNCTION DOOR POSITION MONITORING SWITCH (BY SECURITY) THRESHOLD WEATHERSTRIPPING NOTE: COORDINATE DOOR AND FRAME PREPARATION AND COMPONENT LOCATIONS WITH SECURITY REQUIREMENTS.
HW003	BUTT HINGES LOCKSET – F86 FUNCTION SILENCERS DOOR STOP
HW004	BUTT HINGES PASSAGE SET – F75 FUNCTION SILENCERS DOOR STOP
HW005	ELECTRIC HINGE BUTT HINGES ELECTRIC LOCKSET - F86 FUNCTION SILENCERS DOOR STOP
HW006	BUTT HINGES CLOSER LOCKSET - F82B FUNCTION DOOR SWEEP THRESHOLD WEATHERSTRIP

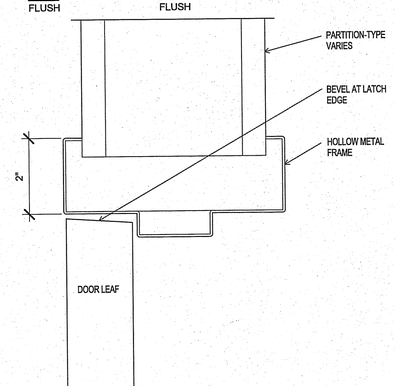

B1 HM JAMB INT
6" = 1'-0"

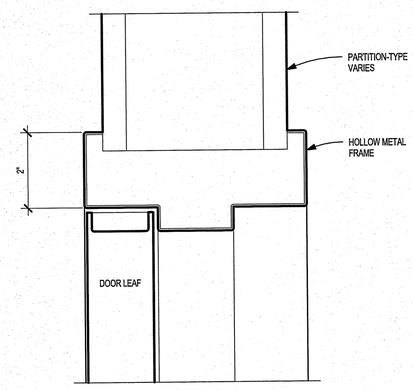

B3 HM INT HEAD
6" = 1'-0"

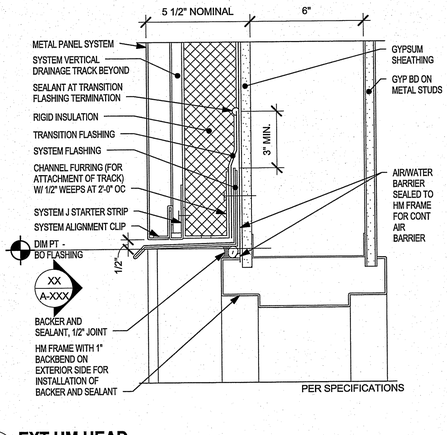

B5 EXT HM HEAD
3" = 1'-0"

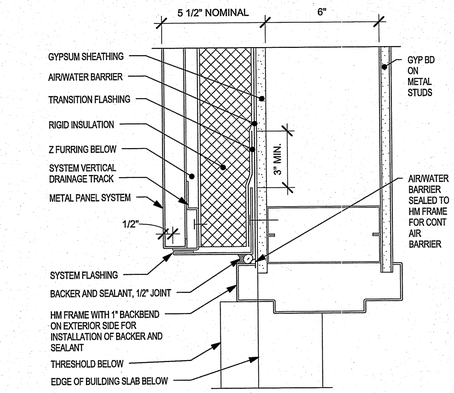

B7 EXT HM JAMB
3" = 1'-0"

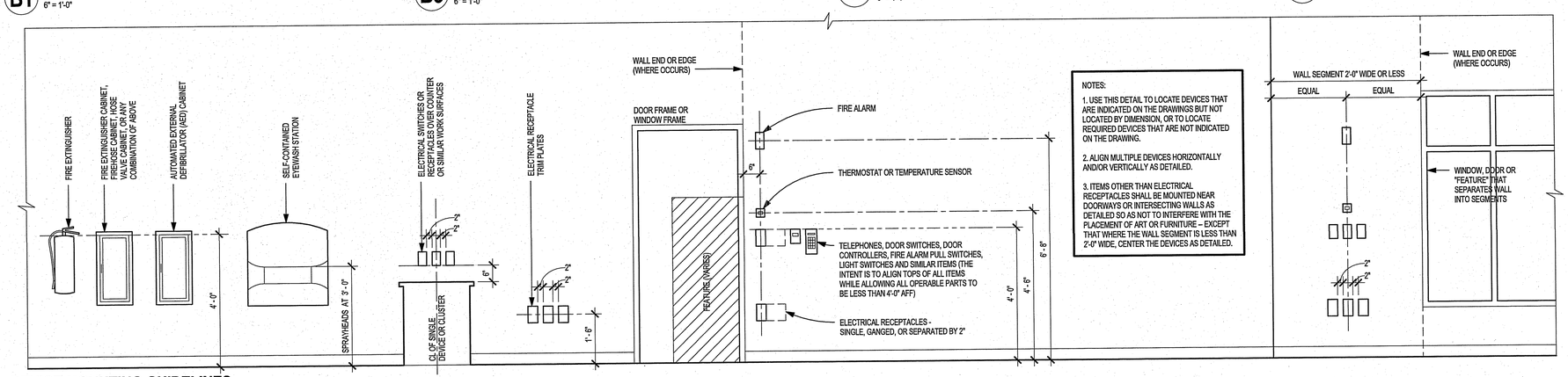

A1 DEVICE MOUNTING GUIDELINES
1/2" = 1'-0"

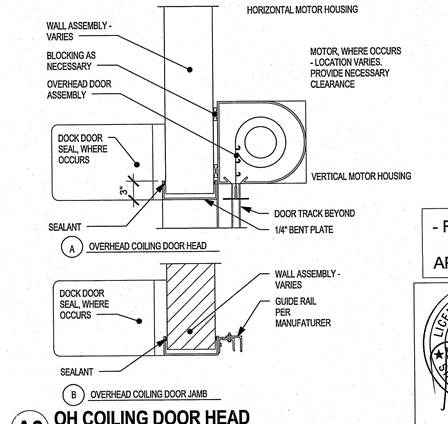

B8 OH COILING DOOR HEAD
1" = 1'-0"

- FINAL DESIGN - FOR AGENCY APPROVAL ONLY

LICENSED ARCHITECT PAUL R. MAKOWICKI C-33907 6-30-17 RENEWAL DATE STATE OF CALIFORNIA

CALLISONRTKL A DESIGN CONSULTANCY OF ARCADIS

ARCADIS

NO.	DATE	DESCRIPTION	GM/SPEC	DWN	CHKD	SUPV	APVD BY
0	11/18/2015	FINAL DESIGN	KK	NT	RC	RAO	

REVISIONS

APPROVED BY	
RAO	

SOH30-01	
SUPV	RC
DSGN	CALLISON
DWN	KK
CHKD	NT
OK	
DATE	11/18/2015
SCALES	As indicated

TOPOCK GROUNDWATER REMEDIATION PROJECT
WATER CONDITIONING PLANT (BUILDING 12)
DOOR & WINDOW SCHEDULES, DETAILS
GAS TRANSMISSION & DISTRIBUTION
PACIFIC GAS AND ELECTRIC COMPANY
SAN FRANCISCO, CALIFORNIA

MICROFILM	
BILL OF MATL	
DWG LIST	
SUPSDS	
SUPSD BY	
SHEET NO.	of SHEETS
A-12-23	REV 0

D:\1. LOCAL FILES\2. Mission Critical\Topock\Revit Files\TOPOCK-12_A_2015 adam-2015-1-cbl.rvt
11/17/2015 2:52:28 PM

006-151658.00

COPYRIGHT © 2015 CALLISON

N1808

KEY NOTES:

1. CONSTRUCTION JOINT WITH 9" PVC WATERSTOP, SEE DET. 2, DWG S-00-02.
2. WALL VERTICAL CONSTRUCTION JOINT WITH 9" PVC WATERSTOP, SEE DET 3, DWG S-00-02 UNLESS NOTED OTHERWISE.
3. CORNER REINFORCING, SEE DETAIL 5, DWG S-00-02.
4. ELEVATIONS SHOWN ARE AT TOP OF CONCRETE FILL.
5. FOR FOUNDATION REINF. SEE DWG. S-12-18.
6. FOOTING NOT REQUIRED IN THIS AREA.

SEE DWG. S-13-15 FOR RETAINING WALL

NOTES:

1. FOR GENERAL STRUCTURAL NOTES, SEE DWG S-00-01.
2. [P- X] INDICATES PILASTER, FOR PILASTER SCHEDULE, SEE DWG. S-12-15.
3. FOR COORDINATES, SEE DWG. C-10-08.
4. FOR DESIGN LOADS, SEE DWG. S-12-04.

FOUNDATION PLAN

1/4" = 1'-0"

- FINAL DESIGN - FOR AGENCY APPROVAL ONLY

REGISTERED PROFESSIONAL ENGINEER VINOD M. BADANI C-041281 EXP. DATE 3/31/17 CIVIL STATE OF CALIFORNIA

E2 Consulting Engineers, Inc.
1900 Powell Street, Ste. 250
Emeryville, CA 94608
(510) 652-1164

ARCADIS

NO.	DATE	DESCRIPTION	GM/SPEC	DWN	CHKD	SUPV	APVD BY
2	11/18/15	FINAL DESIGN	MD	KJ	VMB	RAO	
1	09/08/14	PRE-FINAL 90%) DESIGN	MD	KJ	VMB	VMB	
0	04/05/13	INTERMEDIATE (60%) DESIGN	MD	KJ	VMB	VMB	

REVISIONS

APPROVED BY	RAO
SO	
SUPV	VMB
DSGN	KDD
DWN	WTH/ MD
CHKD	KJ
OK VWB	
DATE	6/30/14
SCALES	AS NOTED

TOPOCK GROUNDWATER REMEDIATION PROJECT
REMEDY - PRODUCED WATER CONDITIONING PLANT
FOUNDATION PLAN
GAS TRANSMISSION & DISTRIBUTION
PACIFIC GAS AND ELECTRIC COMPANY
SAN FRANCISCO, CALIFORNIA

MICROFILM	
BILL OF MATL	
DWG LIST	
SUPSDS	
SUPSD BY	
SHEET NO.	of SHEETS
S-12-01	REV 1

E2-S-XXX-1201.dwg

N1808

KEY NOTES:

1. TOP OF 3"x1/4" DEEP GALVANIZED STEEL GRATING (TYPE W-15-4,MANUFACTURED BY GRATING PACIFIC INC) EL 626.00.
2. TOP OF 3" DEEP (HI4730) FRP FIBERGRATE GRATING EL 626.00.
3. EP - INDICATES EQUIPMENT PAD, SEE DET 10, DWG S-00-02.
4. GRATING SUPPORT L, SEE DETAIL 1, DWG S-00-04.
5. GRATING SUPPORT CHANNEL C9X13.4, SEE DETAIL 2, DWG S-00-04.
6. GUIDE CHANNELS, SEE DETAIL 3, DWG S-00-04.
7. CONST. JT. W/ 6" PVC WATERSTOP. SEE DETAIL 2 ON DWG. S-00-02.

NOTES:

1. FOR GENERAL STRUCTURAL NOTES, SEE DWG S-00-01.
2. P- INDICATES PILASTER, FOR PILASTER SCHEDULE, SEE DWG S-12-15.
3. * DIMENSIONS MARKED WITH AN ASTERISK SHALL BE VERIFIED WITH APPROVED SUBMITTALS.

FIRST FLOOR PLAN

1/4" = 1'-0"

- FINAL DESIGN - FOR AGENCY APPROVAL ONLY

REGISTERED PROFESSIONAL ENGINEER VINOD M. BADANI C-041281 EXP. DATE 3/31/17 CIVIL STATE OF CALIFORNIA

E2 Consulting Engineers, Inc.
1900 Powell Street, Ste. 250
Emeryville, CA 94608
(510) 652-1164

ARCADIS

N1808

NO.	DATE	DESCRIPTION	GM/SPEC	DWN	CHKD	SUPV	APVD BY
2	11/18/15	FINAL DESIGN	MD	KJ	VMB	RAO	
1	09/08/14	PRE-FINAL (90%) DESIGN	MD	KJ	VMB	VMB	
0	04/05/13	INTERMEDIATE (60%) DESIGN	MD	KJ	VMB	VMB	

REVISIONS

APPROVED BY	
	SO
	SUPV
RAO	DSGN
	DWN
	CHKD
	OK
	DATE
	SCALES 1/4"=1'-0"

TOPOCK GROUNDWATER REMEDIATION PROJECT
REMEDY - PRODUCED WATER CONDITIONING PLANT
FIRST FLOOR PLAN
GAS TRANSMISSION & DISTRIBUTION
PACIFIC GAS AND ELECTRIC COMPANY
SAN FRANCISCO, CALIFORNIA

MICROFILM	
BILL OF MATL	
DWG LIST	
SUPSDS	
SUPSD BY	
SHEET NO. of SHEETS	
S-12-02	REV 1

E2-S-XXX-1202.dwg

KEY NOTES:

1. TOP OF CURB EL 640.50 UNLESS NOTED OTHERWISE.
2. EP-1 AND EP-2, TOP OF CONCRETE EL 640.33, SEE DETAIL 10, DWG S-00-02.
3. FD - INDICATES FLOOR DRAIN, TOP AT EL 639.83 LOCATION PER MECHANICAL DWG M-12-XX.
4. TOP OF PERIMETER CURB AT EL 640.50 UNLESS OTHERWISE NOTED. SEE DETAIL 4 ON DWG. S-12-11.
5. FOR STAIR DETAILS SEE DWG S-12-17.
6. ELEVATED SLAB CONSTRUCTION JOINT, SEE DETAIL 3, DWG S-00-02.
7. FOR BEAM VERTICAL CONSTRUCTION JOINT, SEE DETAIL 4, DWG S-00-04.
8. 13" DIA OPENING FOR 12" DUCT.
9. 21" x 21" x 6" HIGH CURB WITH 13" DIA OPENING FOR 12" DUCT, SEE DETAIL 6, DWG. S-00-04.
10. TOP MOUNTED HANDRAIL, SEE DETAIL 1, DWG S-00-03.

NOTES:

1. FOR BEAM SCHEDULE SEE DWG S-12-15.
2. FOR PIPE PENETRATIONS, SEE M- DWGS.

* DIMENSIONS MARKED WITH AN ASTERISK SHALL BE VERIFIED WITH THE MANUFACTURER'S APPROVED SUBMITTALS.

SECOND FLOOR PLAN

1/4" = 1'-0"

- FINAL DESIGN - FOR AGENCY APPROVAL ONLY

E2 Consulting Engineers, Inc.
1900 Powell Street, Ste. 250
Emeryville, CA 94608
(510) 652-1164

ARCADIS

NO.	DATE	DESCRIPTION	GM/SPEC	DWN	CHKD	SUPV	APVD BY
2	11/18/15	FINAL DESIGN		MD	KJ	VMB	RAO
1	09/08/14	PRE-FINAL (90%) DESIGN		MD	KJ	VMB	VMB
0	04/05/13	INTERMEDIATE (60%) DESIGN		MD	KJ	VMB	VMB

REVISIONS

APPROVED BY	SO
RAO	SUPV
	DSGN
	DWN
	CHKD
	OK
	DATE
	SCALES 1/4"=1'-0"

TOPOCK GROUNDWATER REMEDIATION PROJECT
REMEDY - PRODUCED WATER CONDITIONING PLANT
SECOND FLOOR PLAN
GAS TRANSMISSION & DISTRIBUTION
PACIFIC GAS AND ELECTRIC COMPANY
SAN FRANCISCO, CALIFORNIA

REGISTERED PROFESSIONAL ENGINEER
VINOD M. BADANI
C-041281
EXP. DATE 3/31/17
CIVIL
STATE OF CALIFORNIA

MICROFILM	
BILL OF MATL	
DWG LIST	
SUPSDS	
SUPSD BY	
SHEET NO.	of SHEETS
S-12-03	REV 1

E2-S-XXX-1203.dwg

N1808

KEY NOTES:

1. FOR CONNECTION DETAILS, SEE SECTION B ON DWG S-12-12.
2. FOR CONNECTION DETAILS, SEE SECTION C ON DWG S-12-12.
3. FOR CONNECTION DETAILS, SEE SECTION A ON DWG S-12-13.
4. FOR CONNECTION DETAILS, SEE SECTION B ON DWG S-12-13.
5. METAL ROOF DECK:
   ROOF DECK: 1 1/2" DEEP X 36" WIDE PANEL (6 RIBS @ 6" C/C PER PANEL)
   GALVANIZED, (18 GAUGE)
   MINIMUM PROPERTIES/LF OF WIDTH:
   I = 0.29 IN /LF
   +S = 0.315 IN /LF
   -S = 0.316 IN /LF

   CONNECTION:
   1. USE #2 GALVANIZED SCREWS OR 1/2"Ø PUDDLE WELDS AT 6" C/C (6 PER SHEET MIN. FOR 36" WIDE PANELS) TO ATTACH ROOF DECK TO SUPPORTING MEMBERS.
   2. USE # 2 GALVANIZED SCREWS @ 12" C/C FOR SIDE CONNECTIONS.
6. FOR W12x40 CONNECTIONS. SEE DETAIL 2 DWG. S-12-14.
7. RIDGE VENT, SEE ARCHITECTURAL DRAWINGS.

DESIGN LOADS

1. WIND LOADS
   DESIGN HORIZONTAL WIND LOADS ON VERTICAL SURFACES:
   20 PSF (MINIMUM)
   BASIC WIND SPEED: 100 MPH
   IMPORTANCE FACTOR: 1.25
2. SEISMIC LOADS
   CBC, 2013 SITE CLASS: D
   SEISMIC DESIGN CATEGORY: D
   S_s = 0.230
   S_1 = 0.120
   S_{MS} = 0.368
   S_M = 0.279
   S_{DS} = 0.245
   S_D = 0.168
   IMPORTANCE FACTOR: 1.25

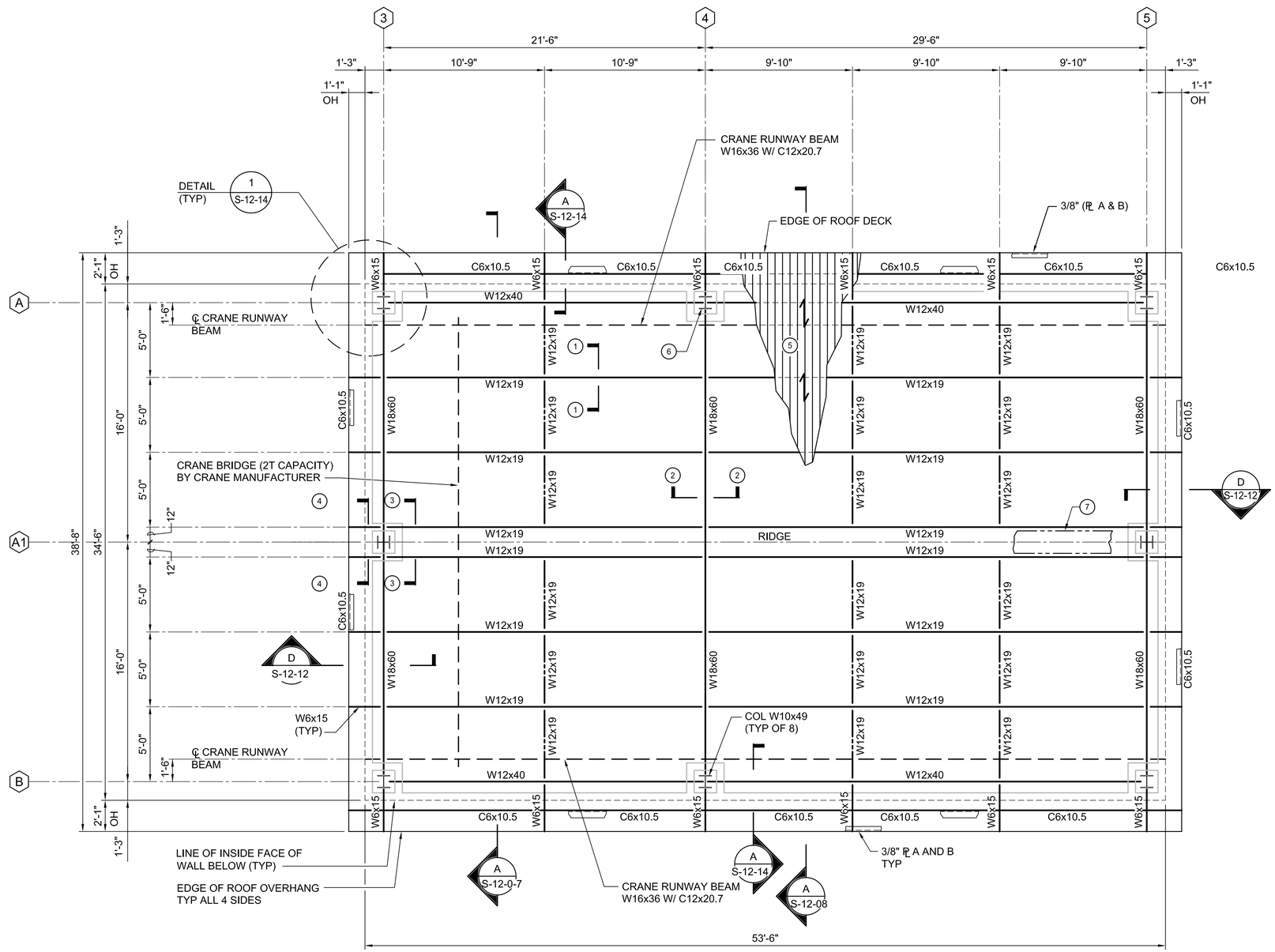

ROOF FRAMING PLAN

1/4" = 1'-0"

- FINAL DESIGN -
FOR AGENCY APPROVAL ONLY

REGISTERED PROFESSIONAL ENGINEER
VINOD M. BADANI
C-041281
EXP. DATE 3/31/17
CIVIL
STATE OF CALIFORNIA

E2 Consulting Engineers, Inc.
1900 Powell Street, Ste. 250
Emeryville, CA 94608
(510) 652-1164

ARCADIS

NO.	DATE	DESCRIPTION	GM/SPEC	DWN	CHKD	SUPV	APVD BY
2	11/18/15	FINAL DESIGN	MD	KJ	VMB	RAO	
1	09/08/14	PRE-FINAL (90%) DESIGN	MD	KJ	VMB	VMB	
0	04/05/13	INTERMEDIATE (60%) DESIGN	MD	KJ	VMB	VMB	

REVISIONS

APPROVED BY	
SO	
SUPV	RAO
DSGN	
DWN	
CHKD	
OK	
DATE	
SCALES	1/4"=1'-0"

TOPOCK GROUNDWATER REMEDIATION PROJECT
REMEDY - PRODUCED WATER CONDITIONING PLANT
ROOF FRAMING PLAN
GAS TRANSMISSION & DISTRIBUTION
PACIFIC GAS AND ELECTRIC COMPANY
SAN FRANCISCO, CALIFORNIA

MICROFILM	
BILL OF MATL	
DWG LIST	
SUPSDS	
SUPSD BY	
SHEET NO. of SHEETS	
S-12-04	REV 1

E2-S-XXX-1204.dwg

N1808

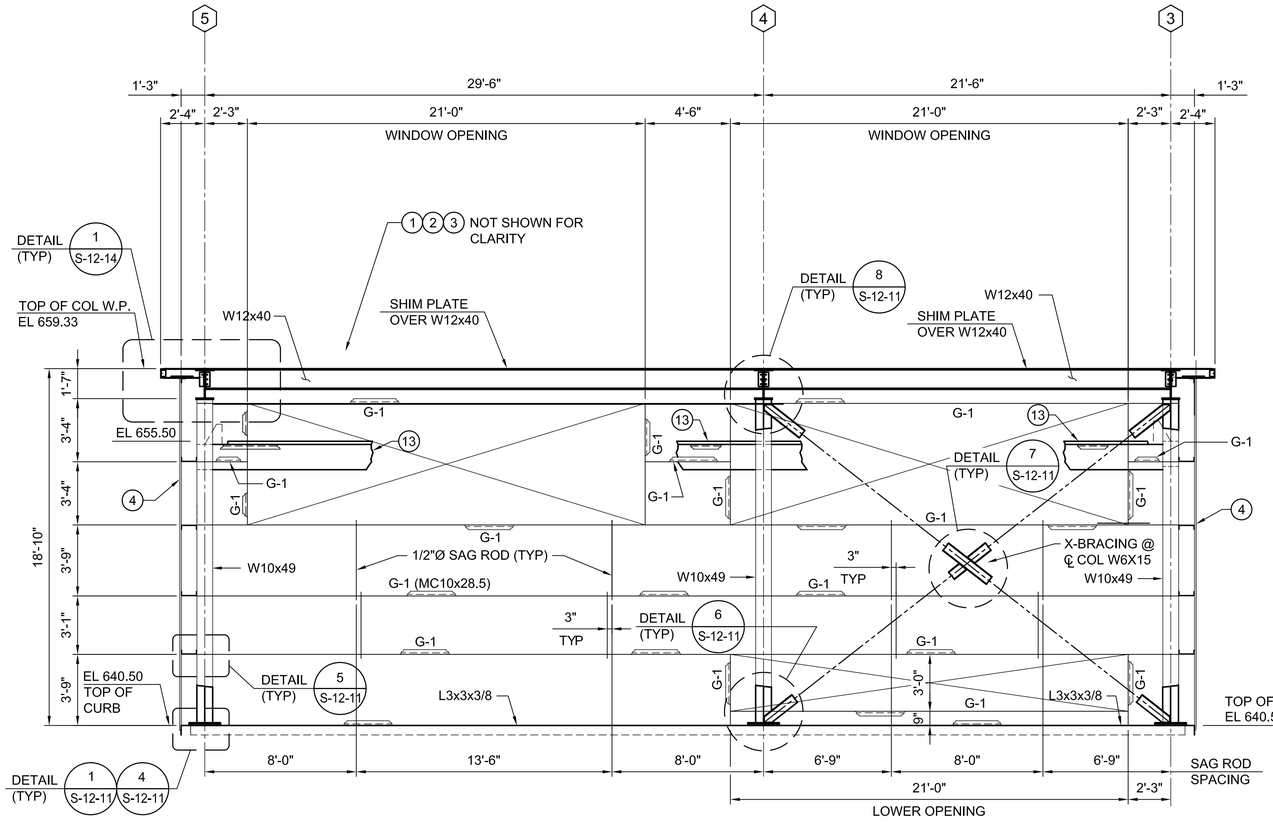

STRUCTURAL FRAMING ELEVATION @ COL (A)

1/4" = 1'-0"

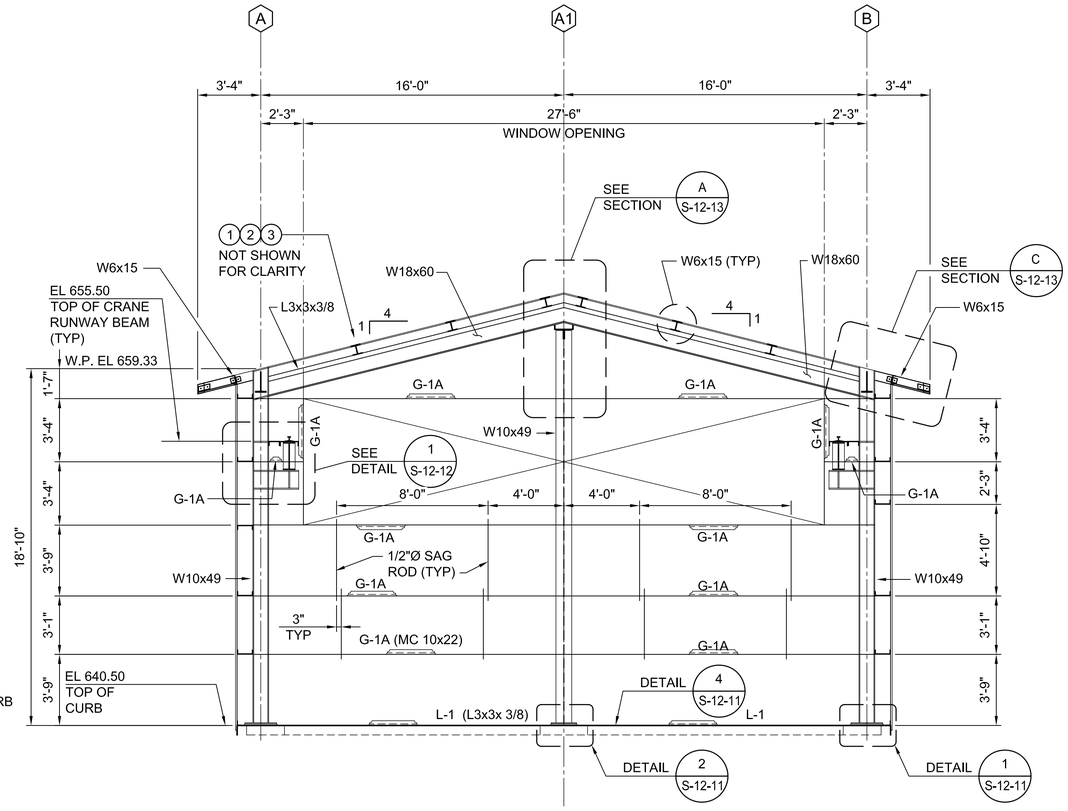

STRUCTURAL FRAMING ELEVATION @ COL LINE (3)

1/4" = 1'-0"

KEY NOTES:

1. METAL STANDING SEAM ROOF.
2. 2" RIGID INSULATION
3. METAL ROOF DECK, SEE DWG, S-12-04.
4. METAL SIDING
   GALVANIZED, ¾" DEEP x 36" WIDE, RIBS @ 6" C/C (24 GAUGE)

   I (+) = 0.0323 in^4 4/LF
   I (-) = 0.0220 in^4 4/LF
   S (+) = 0.0592 in^3 4/LF
   S (-) = 0.0538 $in^3$4/LF

13. CRANE RUNWAY BEAM.

- FINAL DESIGN -
FOR AGENCY APPROVAL ONLY

REGISTERED PROFESSIONAL ENGINEER
VINOD M. BADANI
C-041281
EXP. DATE 3/31/17
CIVIL
STATE OF CALIFORNIA

E2 Consulting Engineers, Inc.
1900 Powell Street, Ste. 250
Emeryville, CA 94608
(510) 652-1164

ARCADIS

NO.	DATE	DESCRIPTION	GM/SPEC	DWN	CHKD	SUPV	APVD BY
2	11/18/15	FINAL DESIGN		MD	KJ	VMB	RAO
1	09/08/14	PRE-FINAL (90%) DESIGN		MD	KJ	VMB	VMB
0	04/05/14	INTERMEDIATE (60%) DESIGN		MD	KJ	VMB	VMB

REVISIONS

APPROVED BY	SO
	SUPV
RAO	DSGN
	DWN
	CHKD
	OK
	DATE
	SCALES 1/4"=1'-0"

TOPOCK GROUNDWATER REMEDIATION PROJECT
REMEDY - PRODUCED WATER CONDITIONING PLANT WALL FRAMING ELEVATIONS
GAS TRANSMISSION & DISTRIBUTION
PACIFIC GAS AND ELECTRIC COMPANY
SAN FRANCISCO, CALIFORNIA

MICROFILM	
BILL OF MATL	
DWG LIST	
SUPSDS	
SUPSD BY	
SHEET NO.	of SHEETS
S-12-05	REV 1

E2-S-XXX-1205.dwg

N1808

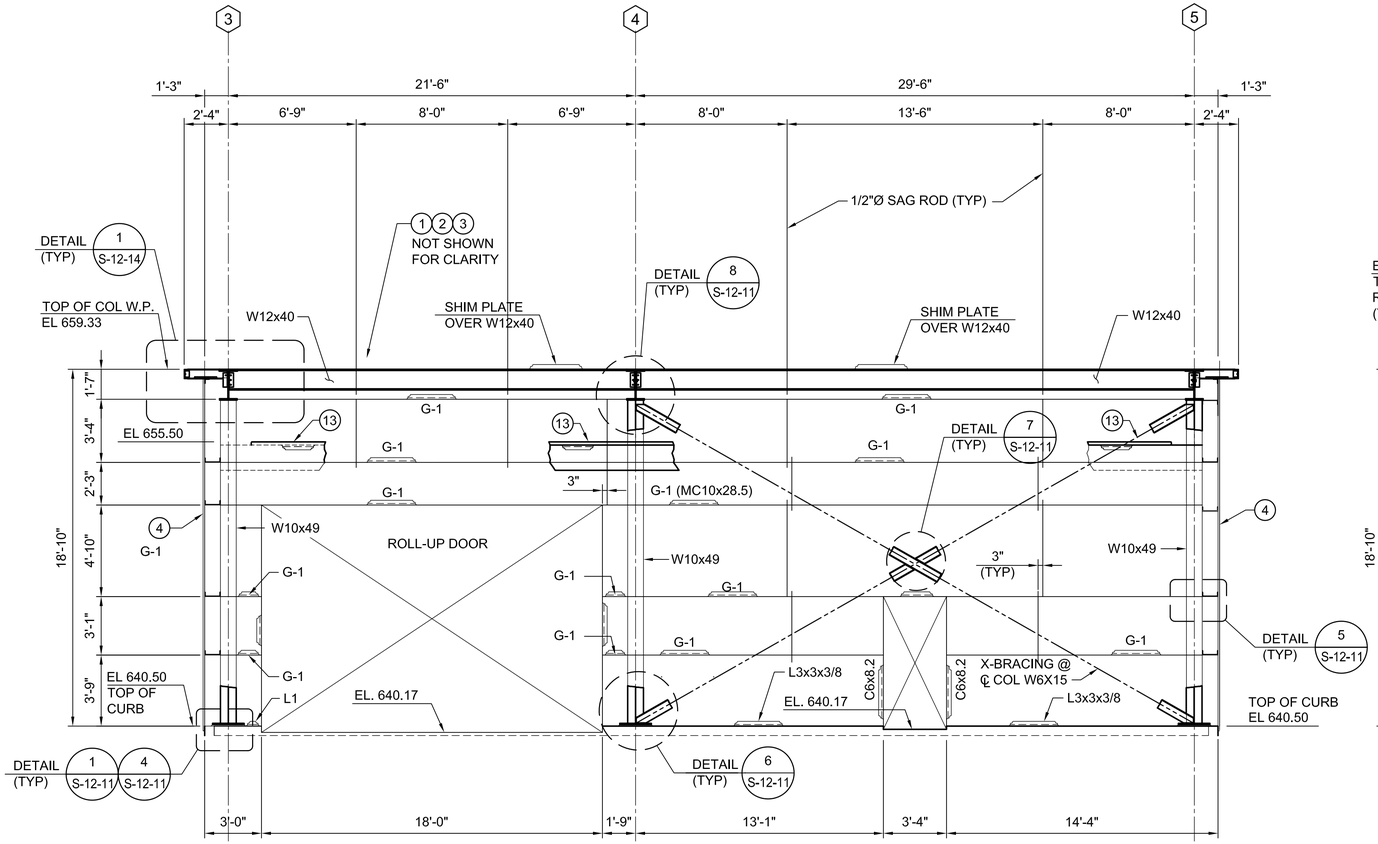

STRUCTURAL FRAMING ELEVATION @ COL (B)

1/4" = 1'-0"

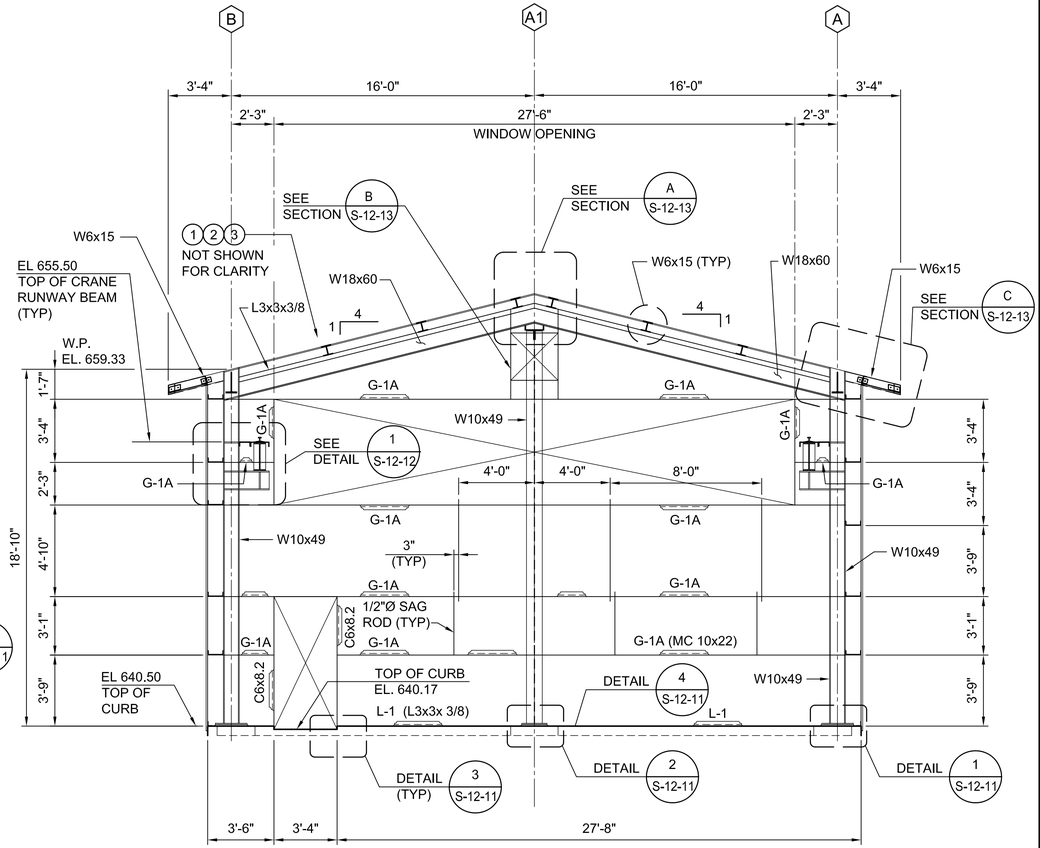

STRUCTURAL FRAMING ELEVATION @ COL LINE (5)

1/4" = 1'-0"

KEY NOTES:

1. METAL STANDING SEAM ROOF.
2. 2" RIGID INSULATION
3. METAL ROOF DECK, SEE DWG. S-12-04.
4. INSULATED METAL SIDING, SEE DWG. S-12-05.
13. CRANE RUNWAY BEAM.

- FINAL DESIGN -
FOR AGENCY APPROVAL ONLY

REGISTERED PROFESSIONAL ENGINEER
VINOD M. BADANI
C-041281
EXP. DATE 3/31/17
CIVIL
STATE OF CALIFORNIA

E2 Consulting Engineers, Inc.
1900 Powell Street, Ste. 250
Emeryville, CA 94608
(510) 652-1164

ARCADIS

NO.	DATE	DESCRIPTION	GM/SPEC	DWN	CHKD	SUPV	APVD BY
2	11/18/15	FINAL DESIGN		MD	KJ	VMB	RAO
1	09/08/14	PRE-FINAL (90%) DESIGN		MD	KJ	VMB	VMB
0	04/05/13	INTERMEDIATE (60%) DESIGN		MD	KJ	VMB	VMB

REVISIONS

APPROVED BY	RAO
SO	
SUPV	
DSGN	
DWN	
CHKD	
OK	
DATE	
SCALES	1/4"=1'-0"

TOPOCK GROUNDWATER REMEDIATION PROJECT
REMEDY - PRODUCED WATER CONDITIONING PLANT WALL FRAMING ELEVATIONS
GAS TRANSMISSION & DISTRIBUTION
PACIFIC GAS AND ELECTRIC COMPANY
SAN FRANCISCO, CALIFORNIA

MICROFILM	
BILL OF MATL	
DWG LIST	
SUPSDS	
SUPSD BY	
SHEET NO.	of SHEETS
S-12-06	REV 1

E2-S-XXX-1205.dwg

N1808

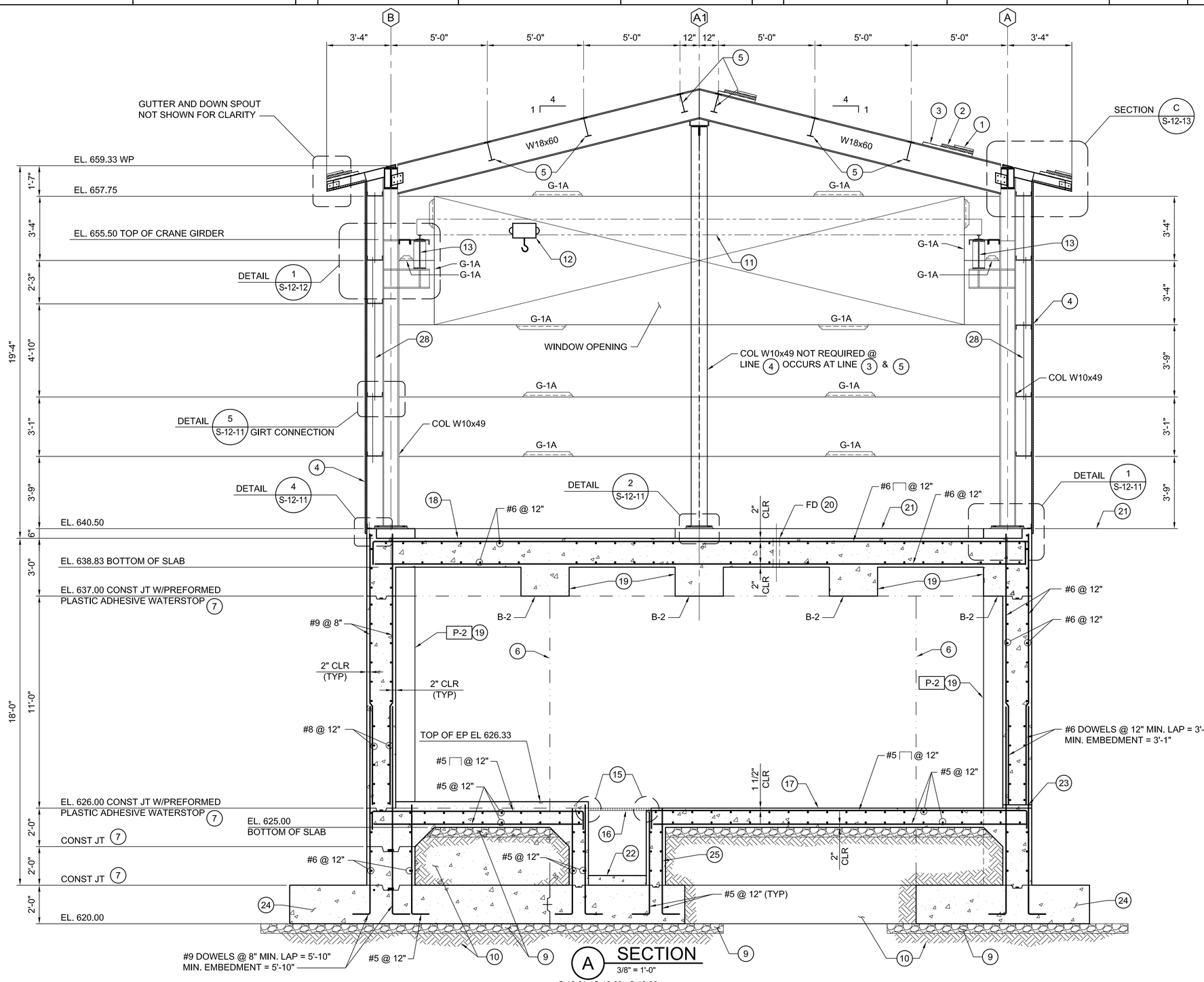

A SECTION
3/8" = 1'-0"
S-12-01 S-12-03 S-12-09
S-12-02 S-12-04

KEY NOTES:

1. METAL STANDING SEAM ROOF.
2. 2" RIGID INSULATION.
3. METAL ROOF DECK.
4. INSULATED METAL SIDING.
5. W12x19.
6. WALL VERTICAL CONST. JT., SEE DETAIL 3, DWG. S-00-02.
7. WALL HORIZONTAL CONST. JT., SEE DETAIL 1, DWG. S-00-02.
8. CONST. JT. WITHOUT WATERSTOP, SEE DETAIL 2, DWG. S-00-02.
9. 6" THICK, CRUSHED ROCK. EXTEND MIN 2'-0" BEYOND FOOTING U.N.O.
10. STRUCTURAL FILL, 95% COMPACTION PER ASTM D1557.
11. SINGLE CRANE BRIDGE, 2 TON CAPACITY, BY CRANE MANUFACTURER.
12. MOTOR OPERATED HOIST.
13. CRANE RUNWAY BEAM.
14. NOT USED.
15. GRATING SUPPORT DETAIL 1 ON DWG. S-00-04.
16. TOP OF GRATING EL. 626.00.
17. TOP OF FLOOR, EL. VARIES. SEE DWG. S-12-02.
18. TOP OF FLOOR, EL. VARIES. SEE DWG. S-12-03.
19. FOR BEAM AND PILASTER SCHEDULE, SEE DWG. S-12-15.
20. FD INDICATES FLOOR DRAIN. SEE DWG. S-12-03.
21. TOP OF EQUIPMENT PAD. EL. 640.50.
22. CONCRETE FILL, SEE DWG. S-12-01.
23. T.O.C. EL. 626.17, ROUND SURFACE AT OPENING.
24. FOR FOUNDATION REINFORCING, SEE DWG. S-12-18.
25. PROVIDE MINIMUM 1 1/2" CLR. COVER FOR VERTICAL BARS U.N.O.
28. 1/2"Ø SAG ROD @ ℄ GIRT.

- FINAL DESIGN -
FOR AGENCY APPROVAL ONLY

REGISTERED PROFESSIONAL ENGINEER
VINOD M. BADANI
C-041281
EXP. DATE 3/31/17
CIVIL
STATE OF CALIFORNIA

E2 Consulting Engineers, Inc.
1900 Powell Street, Ste. 250
Emeryville, CA 94608
(510) 652-1164

ARCADIS

NO.	DATE	DESCRIPTION	GM/SPEC	DWN	CHKD	SUPV	APVD BY
2	11/18/15	FINAL DESIGN		MD	KJ	VMB	RAO
1	09/08/14	PRE-FINAL (90%) DESIGN		MD	KJ	VMB	VMB
0	04/05/13	INTERMEDIATE (60%) DESIGN		MD	KJ	VMB	VMB

REVISIONS

APPROVED BY	
RAO	

SO	
SUPV	VMB
DSGN	KDD
DWN	MD
CHKD	KJ
OK	VMB
DATE	6/30/14
SCALES	1/2"=1'-0"

TOPOCK GROUNDWATER REMEDIATION PROJECT
REMEDY - PRODUCED WATER CONDITIONING PLANT BUILDING SECTION
GAS TRANSMISSION & DISTRIBUTION
PACIFIC GAS AND ELECTRIC COMPANY
SAN FRANCISCO, CALIFORNIA

MICROFILM	
BILL OF MATL	
DWG LIST	
SUPSDS	
SUPSD BY	
SHEET NO. of SHEETS	
S-12-07	REV 1

E2-S-XXX-1207.dwg

N1808

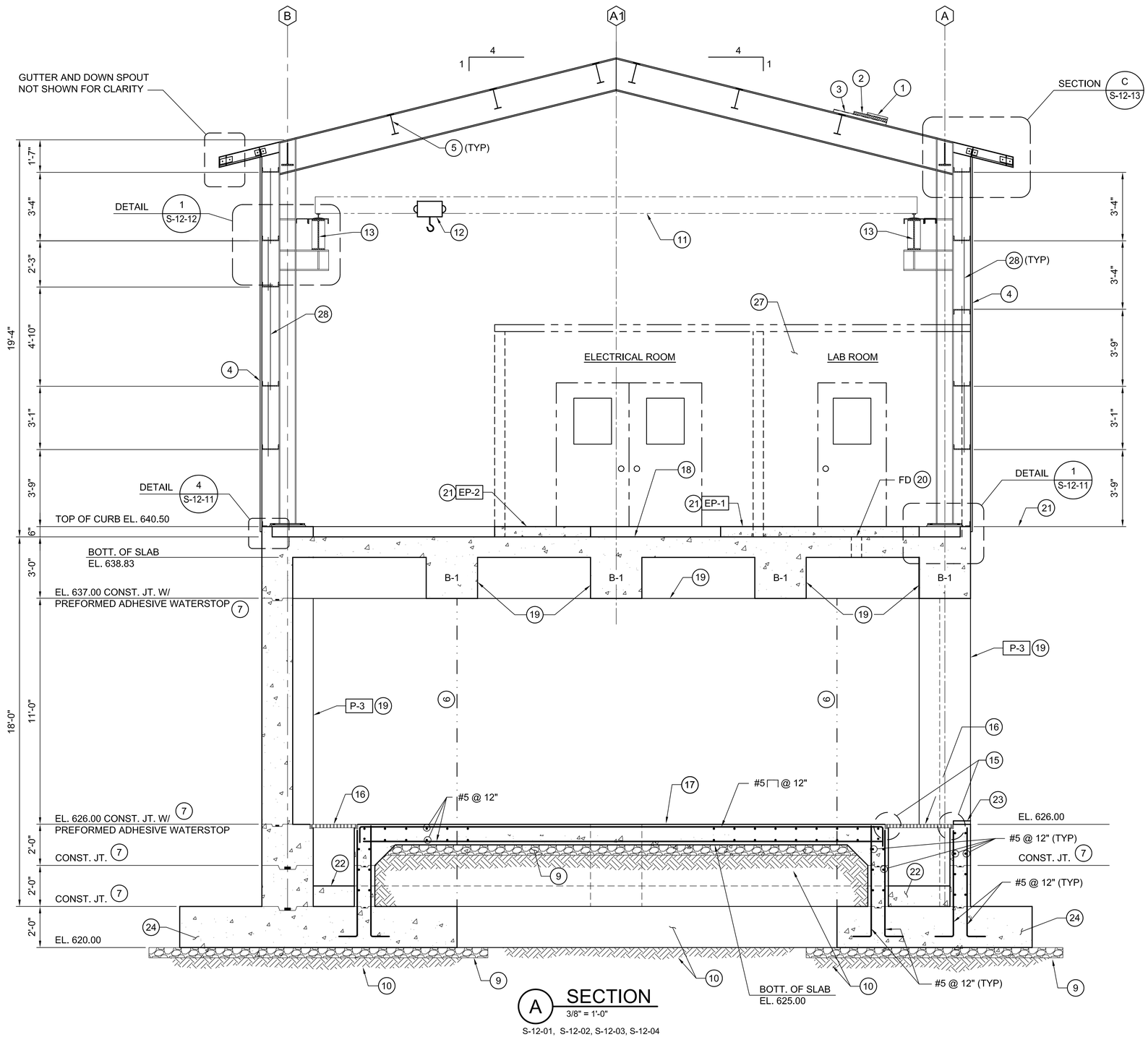

A SECTION
3/8" = 1'-0"

S-12-01, S-12-02, S-12-03, S-12-04

KEY NOTES:

1. METAL STANDING SEAM ROOF.
2. 2" RIGID INSULATION.
3. METAL ROOF DECK.
4. INSULATED METAL SIDING.
5. W12x19.
6. WALL VERTICAL CONST. JT., SEE DETAIL 3, DWG. S-00-02.
7. WALL HORIZONTAL CONST. JT., SEE DETAIL 1, DWG. S-00-02.
8. CONST. JT. WITHOUT WATERSTOP, SEE DETAIL 2, DWG. S-00-02.
9. 6" THICK, CRUSHED ROCK. EXTEND MIN 2'-0" BEYOND FOOTING U.N.O.
10. STRUCTURAL FILL, 95% COMPACTION PER ASTM D 1557.
11. SINGLE CRANE BRIDGE, 2 TON CAPACITY, BY CRANE MANUFACTURER.
12. MOTOR OPERATED HOIST.
13. CRANE RUNWAY BEAM.
14. NOT USED.
15. GRATING SUPPORT DETAIL 1 ON DWG. S-00-04.
16. TOP OF GRATING EL. 626.00.
17. TOP OF FLOOR, EL. VARIES. SEE DWG. S-12-02.
18. TOP OF FLOOR, EL. VARIES. SEE DWG. S-12-03.
19. FOR BEAM AND PILASTER SCHEDULE, SEE DWG. S-12-15.
20. FD INDICATES FLOOR DRAIN. SEE DWG. S-12-03.
21. TOP OF EQUIPMENT PAD. EL. 640.50.
22. CONCRETE FILL, SEE DWG. S-12-01.
23. T.O.C. EL. 626.17, ROUND SURFACE AT OPENING.
24. FOR FOUNDATION REINFORCING, SEE DWG. S-12-18.
26. NOT USED.
27. SEE ARCHITECTURAL DRAWING FOR LABORATORY AND ELECTRICAL ROOM REQUIREMENTS.
28. 1/2"Ø SAG ROD @ ℄ GIRT.

NOTES:

1. FOR INFORMATION NOT SHOWN OR INDICATED, SEE DWG S-12-07.

- FINAL DESIGN -
FOR AGENCY APPROVAL ONLY

REGISTERED PROFESSIONAL ENGINEER
VINOD M. BADANI
C-041281
EXP. DATE 3/31/17
CIVIL
STATE OF CALIFORNIA

E2 Consulting Engineers, Inc.
1900 Powell Street, Ste. 250
Emeryville, CA 94608
(510) 652-1164

ARCADIS

NO.	DATE	DESCRIPTION	GM/SPEC	DWN	CHKD	SUPV	APVD BY
2	11/18/15	FINAL DESIGN		MD	KJ	VMB	RAO
1	09/08/14	PRE-FINAL (90%) DESIGN		MD	KJ	VMB	VMB
0	04/05/13	INTERMEDIATE (60%) DESIGN		MD	KJ	VMB	VMB

REVISIONS

APPROVED BY	
RAO	SO
	SUPV
	DSGN
	DWN
	CHKD
	OK
	DATE
	SCALES 3/8"=1'-0"

TOPOCK GROUNDWATER REMEDIATION PROJECT
REMEDY - PRODUCED WATER CONDITIONING PLANT BUILDING SECTION
GAS TRANSMISSION & DISTRIBUTION
PACIFIC GAS AND ELECTRIC COMPANY
SAN FRANCISCO, CALIFORNIA

MICROFILM	
BILL OF MATL	
DWG LIST	
SUPSDS	
SUPSD BY	
SHEET NO.	of SHEETS
S-12-08	REV 1

E2-S-XXX-1208.dwg

N1808

KEY NOTES:

(6) WALL VERTICAL CONST. JT., SEE DETAIL 3, DWG. S-00-02.

(7) WALL HORIZONTAL CONST. JT., SEE DETAIL 1, DWG. S-00-02.

(8) CONST. JT. WITHOUT WATERSTOP, SEE DETAIL 2, DWG. S-00-02.

(9) 6" THICK, CRUSHED ROCK. EXTEND MIN 2'-0" BEYOND FOOTING U.N.O.

(10) STRUCTURAL FILL, 95% COMPACTION PER ASTM D 1557.

(15) GRATING SUPPORT DETAIL 1 ON DWG. S-00-04.

(16) TOP OF GRATING EL. 626.00.

(17) TOP OF FLOOR, EL. VARIES. SEE DWG. S-12-02.

(18) TOP OF FLOOR, EL. VARIES. SEE DWG. S-12-03.

(19) FOR BEAM AND PILASTER SCHEDULE, SEE DWG. S-12-15.

(20) FD INDICATES FLOOR DRAIN. SEE DWG. S-12-03.

(21) TOP OF EQUIPMENT PAD. EL. 640.50.

(22) CONCRETE FILL, SEE DWG. S-12-01.

(24) PER FOUNDATION REINFORCING, SEE DWG. S-12-18.

(26) NOT USED.

(27) SEE ARCHITECTURAL DRAWING FOR LABORATORY AND ELECTRICAL ROOM REQUIREMENTS.

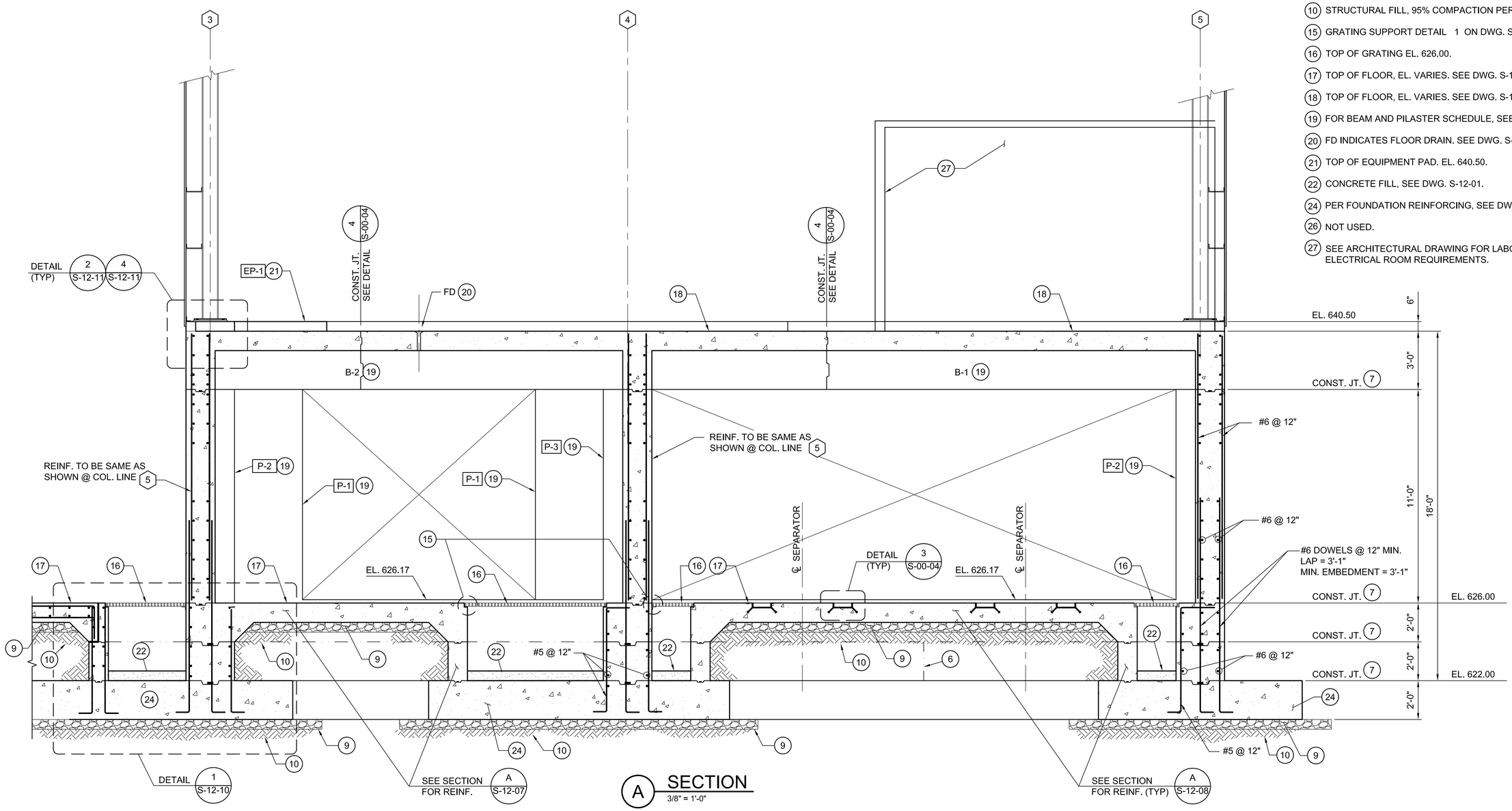

A SECTION
3/8" = 1'-0"

S-12-01, S-12-02, S-12-03

- FINAL DESIGN -
FOR AGENCY APPROVAL ONLY

REGISTERED PROFESSIONAL ENGINEER
VINOD M. BADANI
C-041281
EXP. DATE 3/31/17
CIVIL
STATE OF CALIFORNIA

E2 Consulting Engineers, Inc.
1900 Powell Street, Ste. 250
Emeryville, CA 94608
(510) 652-1164

ARCADIS

NO.	DATE	DESCRIPTION	GM/SPEC	DWN	CHKD	SUPV	APVD BY
2	11/18/15	FINAL DESIGN		MD	KJ	VMB	RAO
1	9/08/14	PRE-FINAL (90%) DESIGN		MD	KJ	VMB	VMB
0	04/05/13	INTERMEDIATE (60%) DESIGN		MD	KJ	VMB	VMB

REVISIONS

APPROVED BY	RAO
SO	
SUPV	VMB
DSGN	KDD
DWN	MD
CHKD	KJ
OK	VMB
DATE	6/30/14
SCALES	3/8"=1'-0"

TOPOCK GROUNDWATER REMEDIATION PROJECT
REMEDY - PRODUCED WATER CONDITIONING PLANT BUILDING SECTION
GAS TRANSMISSION & DISTRIBUTION
PACIFIC GAS AND ELECTRIC COMPANY
SAN FRANCISCO, CALIFORNIA

MICROFILM	
BILL OF MATL	
DWG LIST	
SUPSDS	
SUPSD BY	
SHEET NO. of SHEETS	
S-12-09	REV 1

E2-S-XXX-1209.dwg

N180B

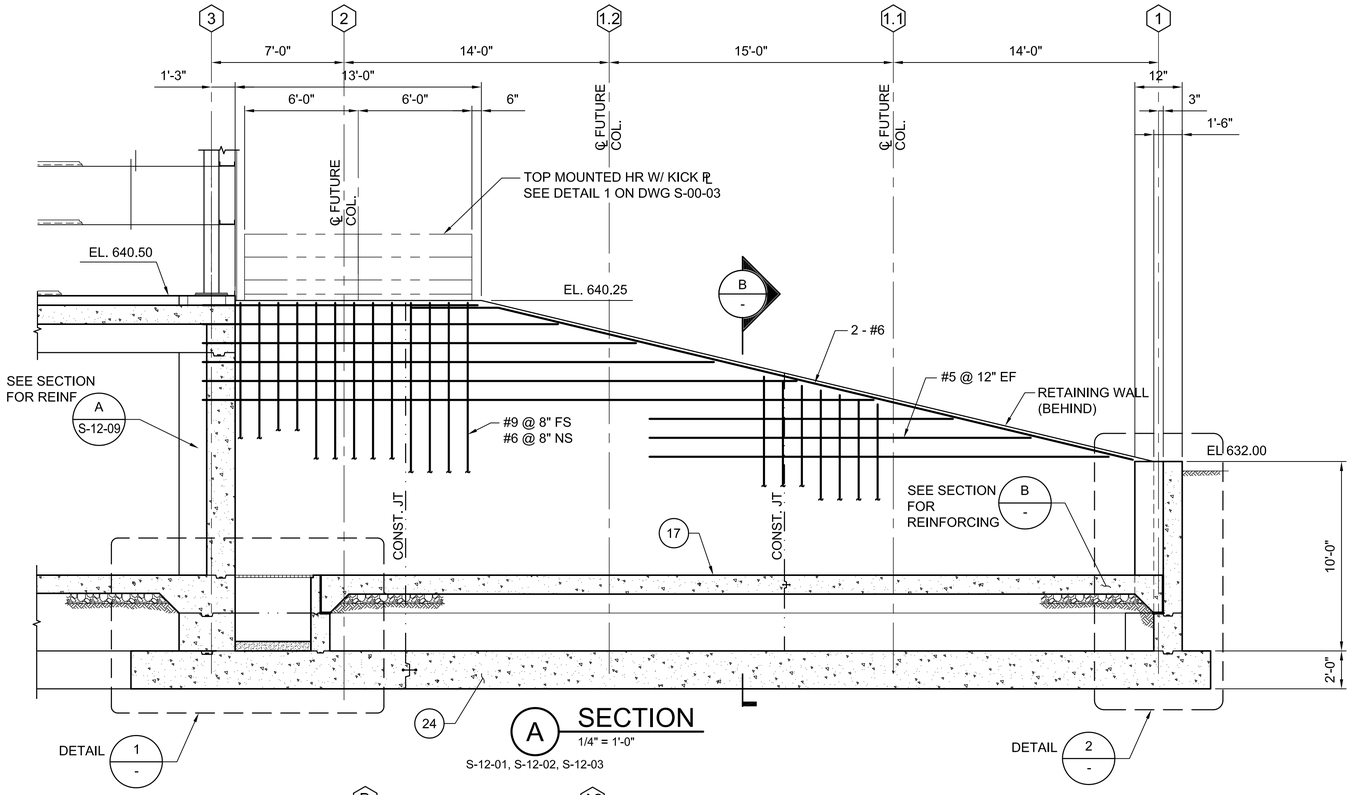

A SECTION
1/4" = 1'-0"
S-12-01, S-12-02, S-12-03

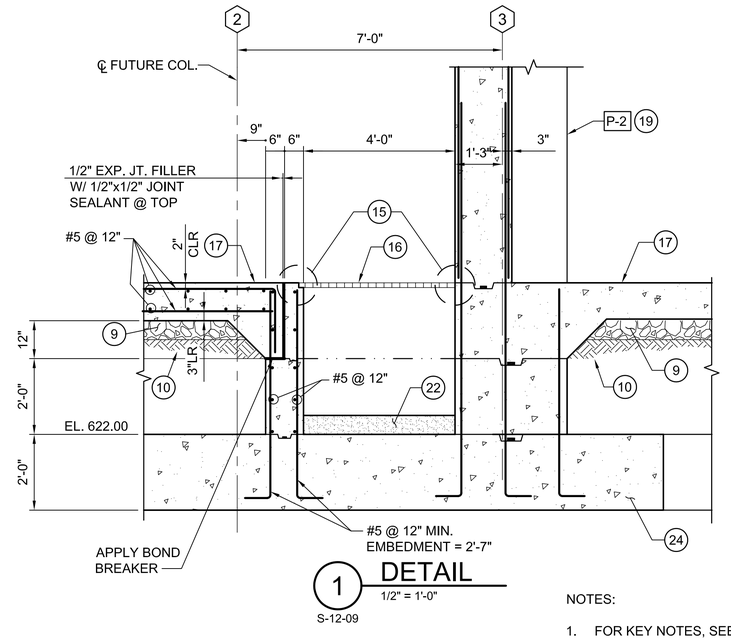

1 DETAIL
1/2" = 1'-0"
S-12-09

NOTES:

1. FOR KEY NOTES, SEE DWG S-12-07.

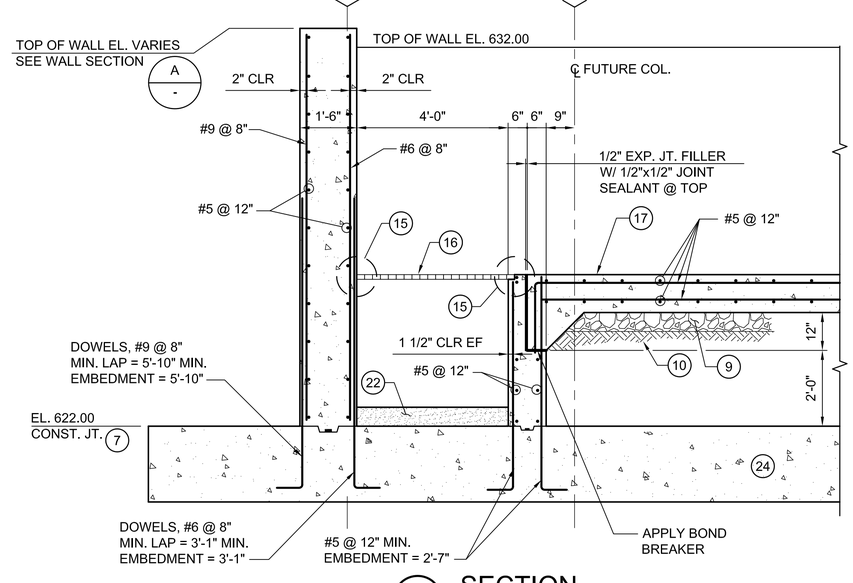

B SECTION
1/2" = 1'-0"
S-12-01, S-12-02, S-12-03

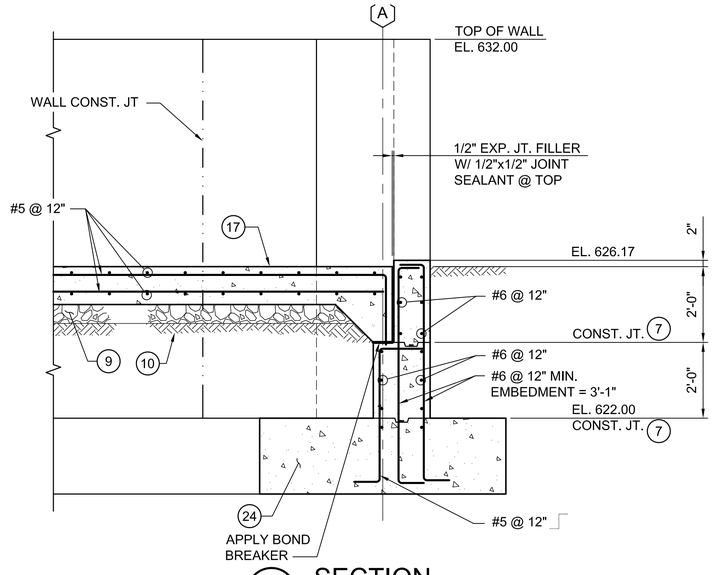

C SECTION
1/2" = 1'-0"
S-12-01, S-12-02

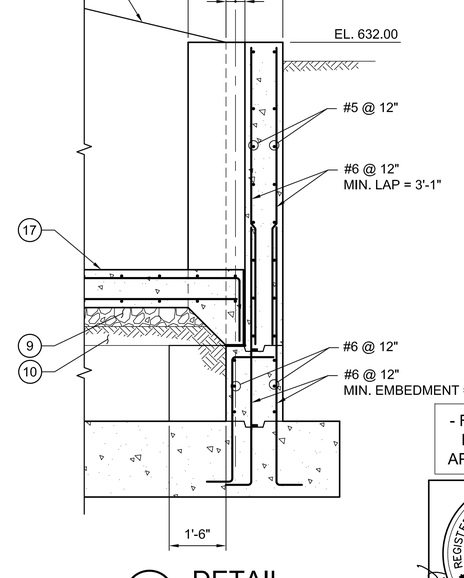

2 DETAIL
1/2" = 1'-0"
-

- FINAL DESIGN - FOR AGENCY APPROVAL ONLY

REGISTERED PROFESSIONAL ENGINEER
VINOD M. BADANI
C-041281
EXP. DATE 3/31/17
CIVIL
STATE OF CALIFORNIA

E2-S-XXX-1203.dwg

E2 Consulting Engineers, Inc.
1900 Powell Street, Ste. 250
Emeryville, CA 94608
(510) 652-1164

ARCADIS

NO.	DATE	DESCRIPTION	GM/SPEC	DWN	CHKD	SUPV	APVD BY
1	11/18/15	FINAL DESIGN		MD	KJ	VMB	RAO
0	09/08/14	PRE-FINAL (90%) DESIGN		MD	KJ	VMB	VMB

REVISIONS

APPROVED BY	
RAO	SO
	SUPV
	DSGN
	DWN
	CHKD
	OK
	DATE
	SCALES AS NOTED

TOPOCK GROUNDWATER REMEDIATION PROJECT
REMEDY - PRODUCED WATER CONDITIONING PLANT SECTIONS AND DETAILS
GAS TRANSMISSION & DISTRIBUTION
PACIFIC GAS AND ELECTRIC COMPANY
SAN FRANCISCO, CALIFORNIA

MICROFILM	
BILL OF MATL	
DWG LIST	
SUPSDS	
SUPSD BY	
SHEET NO.	of SHEETS
S-12-10	REV 0

N1808

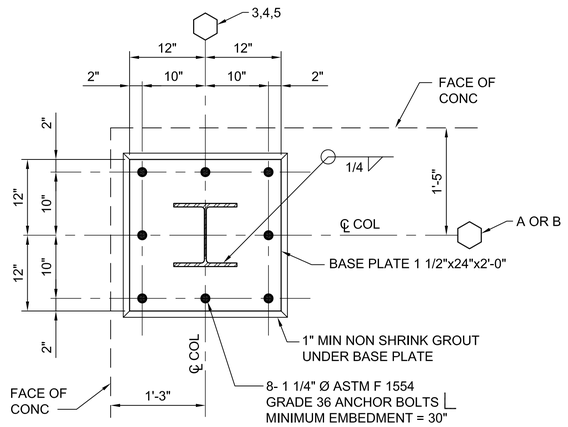

1 DETAIL
1" = 1'-0"

S-12-03, S-12-05, S-12-06
S-12-07, S-12-08

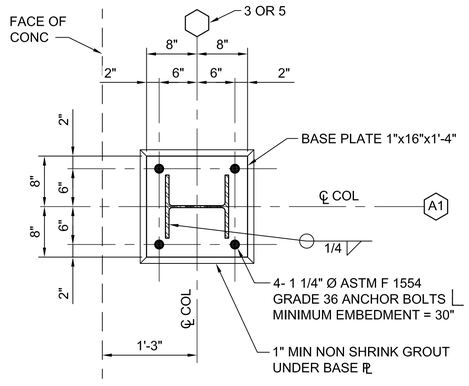

2 DETAIL
1" = 1'-0"

S-12-03, S-12-05, S-12-06
S-12-07, S-12-09

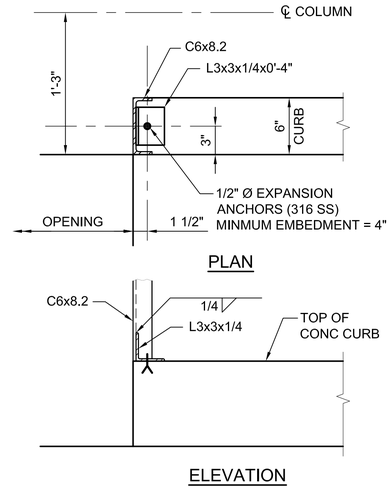

3 DETAIL
1 1/2" = 1'-0"

S-12-03, S-12-06

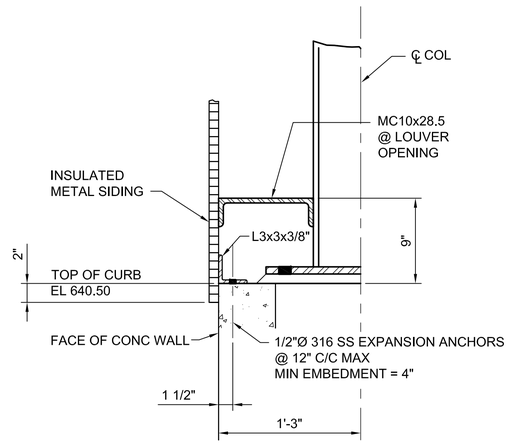

4 DETAIL (TYP ALL SIDES)
1 1/2" = 1'-0"

S-12-03, S-12-05, S-12-06
S-12-07, S-12-08, S-12-09

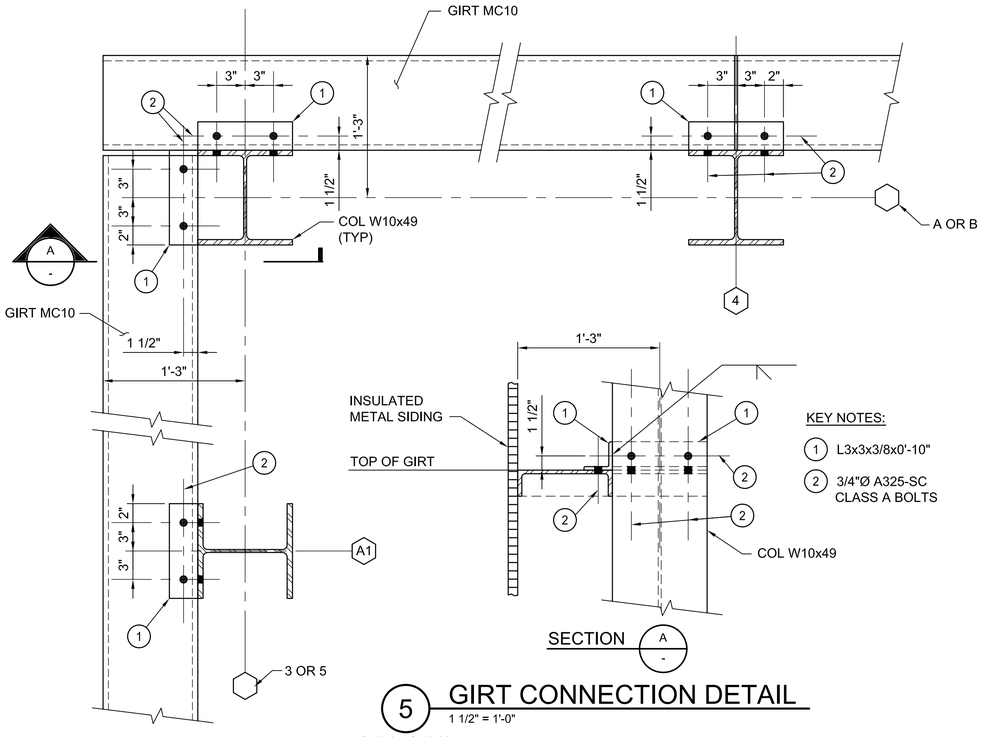

5 GIRT CONNECTION DETAIL
1 1/2" = 1'-0"

S-12-05, S-12-06

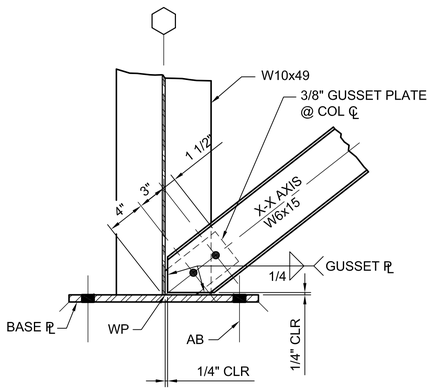

USE 3/4"Ø A325-SC CLASS A BOLTS

6 DETAIL
1 1/2" = 1'-0"

S-12-05
S-12-06

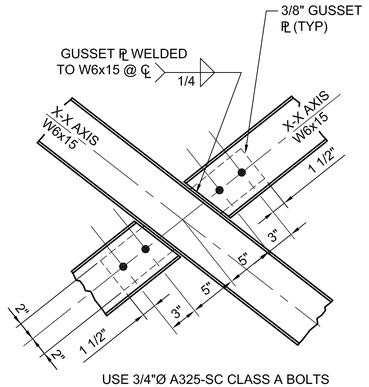

USE 3/4"Ø A325-SC CLASS A BOLTS

7 DETAIL
1 1/2" = 1'-0"

S-12.05
S-12-06

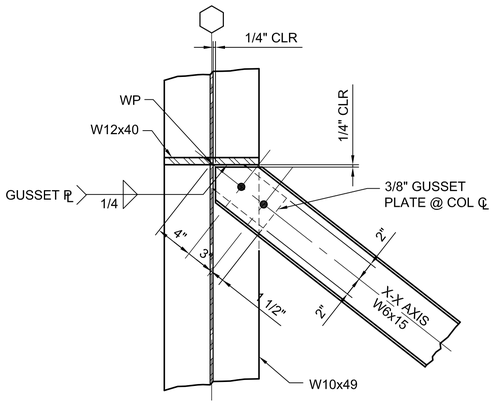

USE 3/4"Ø A325-SC CLASS A BOLTS

8 DETAIL
1 1/2" = 1'-0"

S-12-05
S-12-06

REGISTERED PROFESSIONAL ENGINEER
VINOD M. BADANI
C-041281
EXP. DATE 3/31/17
CIVIL
STATE OF CALIFORNIA

- FINAL DESIGN -
FOR AGENCY APPROVAL ONLY

E2 Consulting Engineers, Inc.
1900 Powell Street, Ste. 250
Emeryville, CA 94608
(510) 652-1164

ARCADIS

NO.	DATE	DESCRIPTION	GM/SPEC	DWN	CHKD	SUPV	APVD BY
1	11/18/15	FINAL DESIGN		MD	KJ	VMB	RAO
0	09/08/14	PRE-FINAL (90%) DESIGN		MD	KJ	VMB	VMB

REVISIONS

APPROVED BY	
RAO	

SO	
SUPV	
DSGN	
DWN	
CHKD	
OK	
DATE	
SCALES	AS NOTED

TOPOCK GROUNDWATER REMEDIATION PROJECT
REMEDY - PRODUCED WATER CONDITIONING PLANT SECTIONS AND DETAILS
GAS TRANSMISSION & DISTRIBUTION
PACIFIC GAS AND ELECTRIC COMPANY
SAN FRANCISCO, CALIFORNIA

MICROFILM	
BILL OF MATL	
DWG LIST	
SUPSDS	
SUPSD BY	
SHEET NO. of	SHEETS
S-12-11	REV 0

E2-S-XXX-1203.dwg

N180B

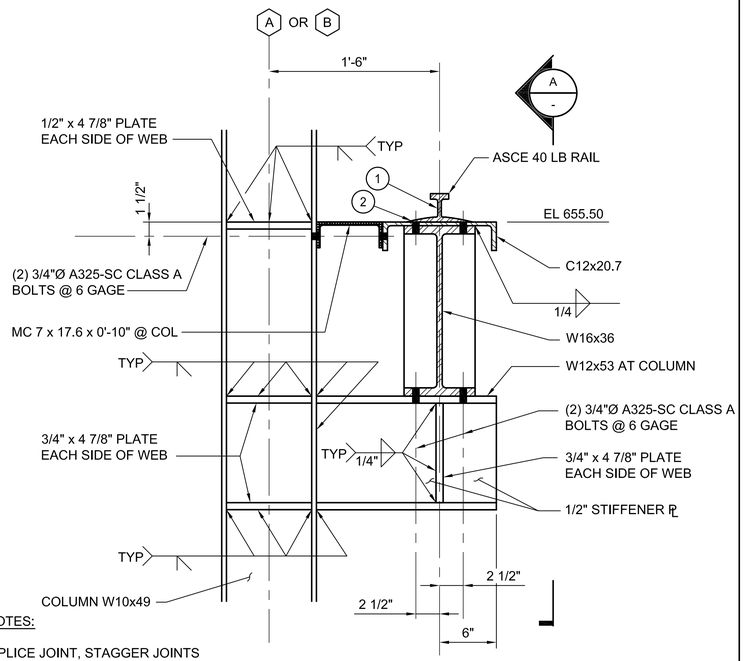

KEY NOTES:

1. RAIL SPLICE JOINT, STAGGER JOINTS WITH OPPOSITE SIDE.
2. ATTACH RAL TO CRANE GIRDER PER MANUFACTURER'S RECOMMENDATIONS.
3. CRANE STOP AT EACH END PER CRANE MANUFACTURER'S RECOMMENDATIONS,

1 DETAIL

1 1/2" = 1'-0"

S-12-05, S-12-06, S-12-07, S-12-08

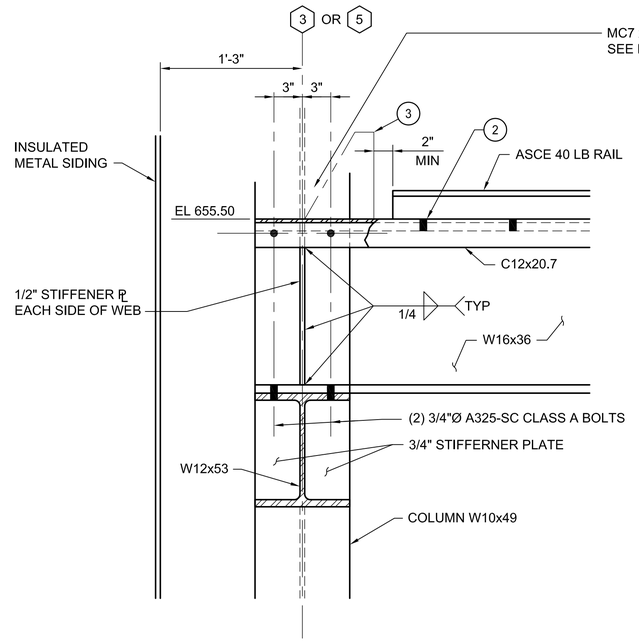

AT COL LINE 3 AND 5

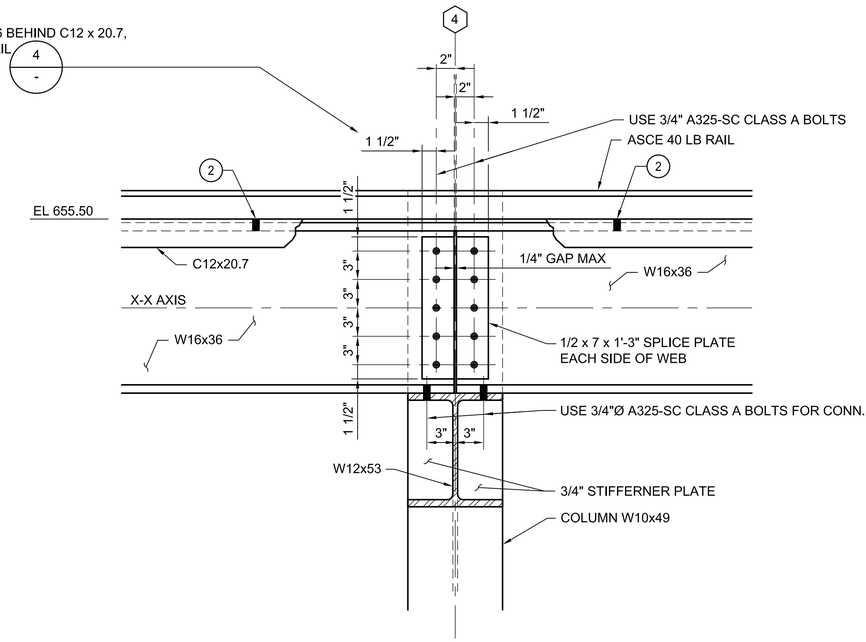

AT COL LINE 4

A SECTION

1 1/2" = 1'-0"

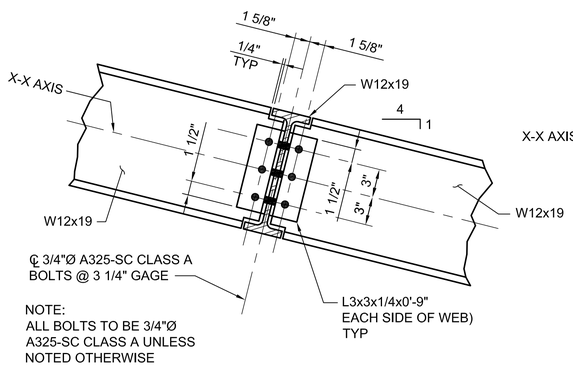

NOTE:
ALL BOLTS TO BE 3/4"Ø
A325-SC CLASS A UNLESS
NOTED OTHERWISE

B SECTION

1 1/2" = 1'-0"

S-12-04

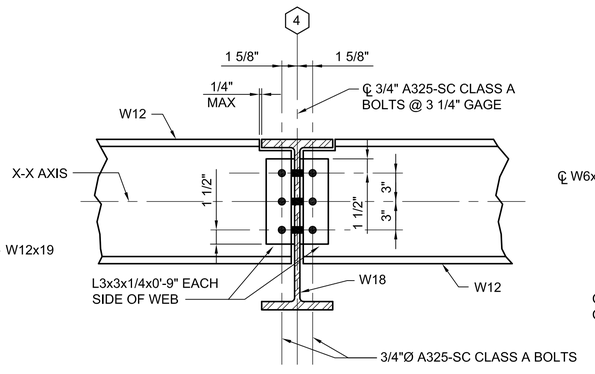

C SECTION

1 1/2" = 1'-0"

S-12-04

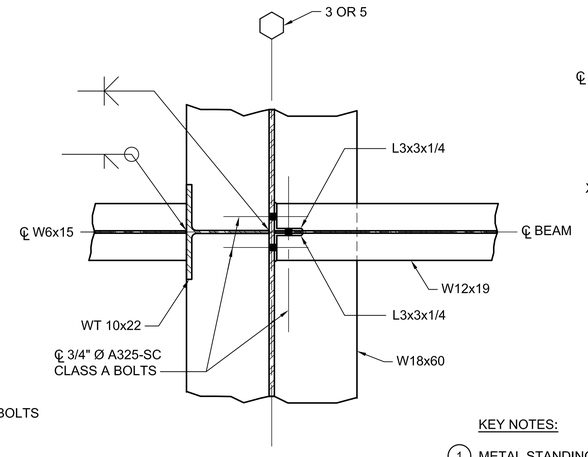

E SECTION

1 1/2" = 1'-0"

-

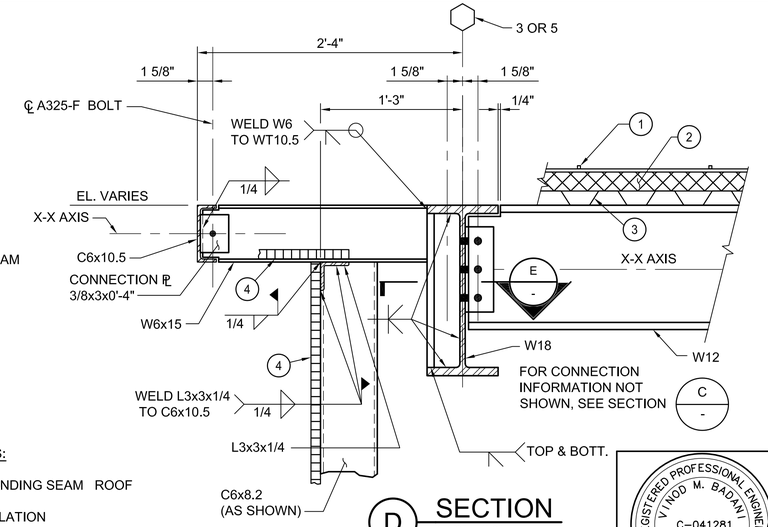

KEY NOTES:

1. METAL STANDING SEAM ROOF
2. RIGID INSULATION
3. METAL ROOF DECK
4. INSULATED METAL SIDING

D SECTION

1 1/2" = 1'-0"

S-12-04, S-12-13, S-12-14

- FINAL DESIGN -
FOR AGENCY APPROVAL ONLY

REGISTERED PROFESSIONAL ENGINEER
VINOD M. BADANI
C-041281
EXP. DATE 3/31/17
CIVIL
STATE OF CALIFORNIA

E2 Consulting Engineers, Inc.
1900 Powell Street, Ste. 250
Emeryville, CA 94608
(510) 652-1164

ARCADIS

NO.	DATE	DESCRIPTION	GM/SPEC	DWN	CHKD	SUPV	APVD	BY
1	11/18/15	FINAL DESIGN		MD	KJ	VMB	RAO	
0	09/08/14	PRE-FINAL (90%) DESIGN		MD	KJ	VMB	VMB	

REVISIONS

APPROVED BY	
RAO	SO
	SUPV
	DSGN
	DWN
	CHKD
	OK
	DATE
	SCALES

AS NOTED

TOPOCK GROUNDWATER REMEDIATION PROJECT

REMEDY - PRODUCED WATER CONDITIONING PLANT SECTIONS AND DETAILS

GAS TRANSMISSION & DISTRIBUTION
PACIFIC GAS AND ELECTRIC COMPANY
SAN FRANCISCO, CALIFORNIA

MICROFILM	
BILL OF MATL	
DWG LIST	
SUPSDS	
SUPSD BY	
SHEET NO.	of SHEETS
S-12-12	REV 0

E2-S-XXX-1203.dwg

N180B

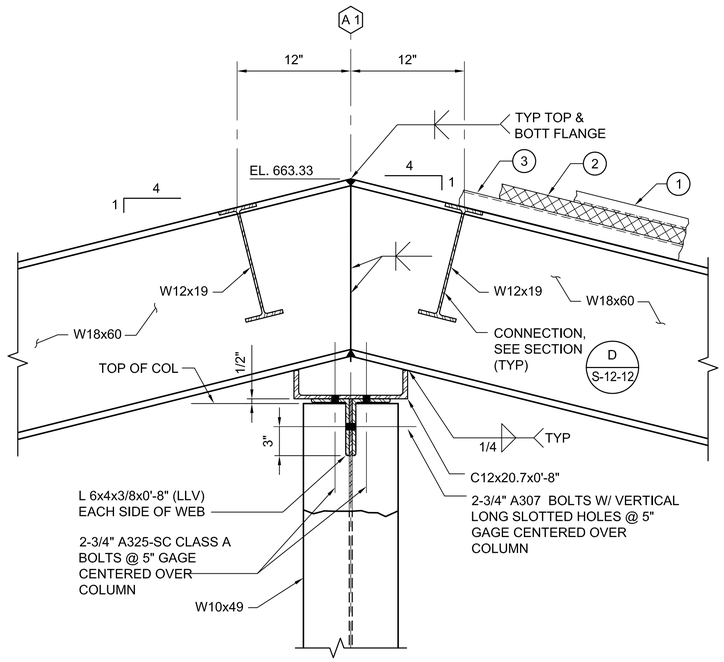

A SECTION
1 1/2" = 1'-0"
S-12-04, S-12-05, S-12-06

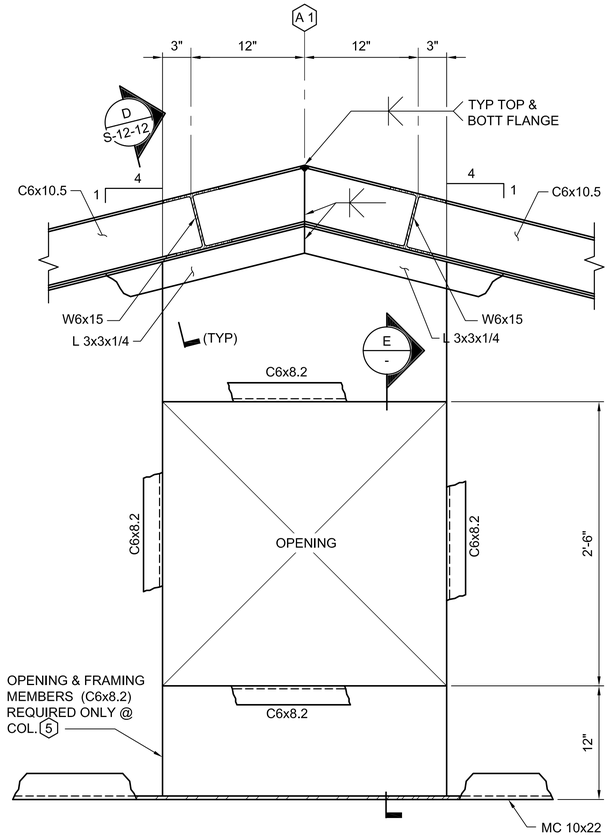

B SECTION AT LINE ③ & ⑤ ONLY
1 1/2" = 1'-0"
S-12-04, S-12-05, S-12-06, S-12-07

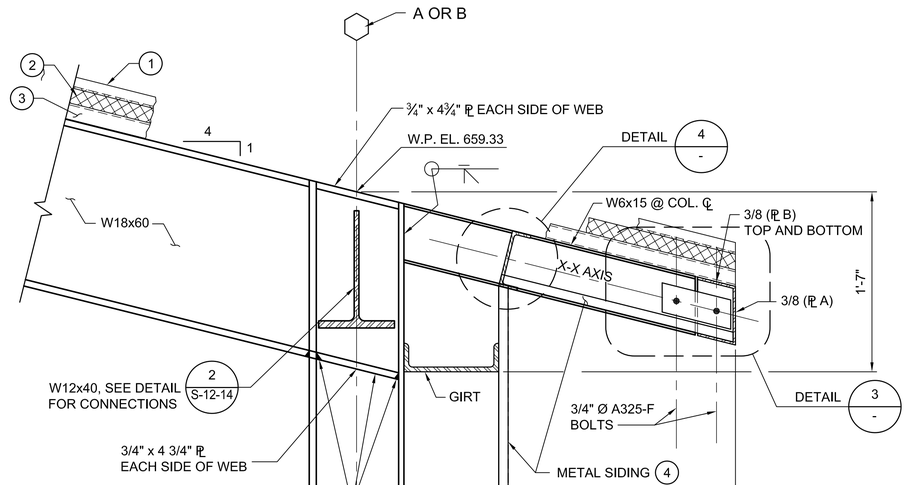

C SECTION
1 1/2" = 1'-0"
S-12-05, S-12-06, S-12-07, S-12-08, S-12-14

KEY NOTES:

1. METAL STANDING SEAM ROOF.
2. 2" RIGID INSULATION
3. METAL ROOF DECK
4. INSULATED METAL SIDING

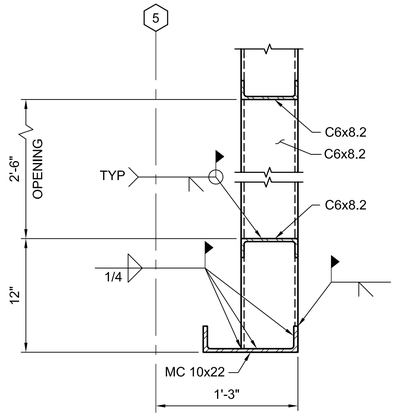

E SECTION
1 1/2" = 1'-0"

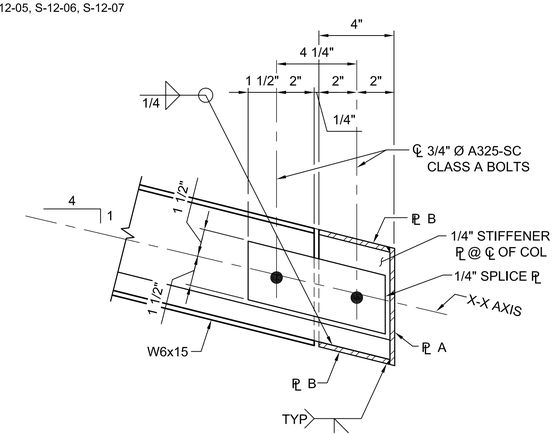

3 DETAIL
3" = 1'-0"

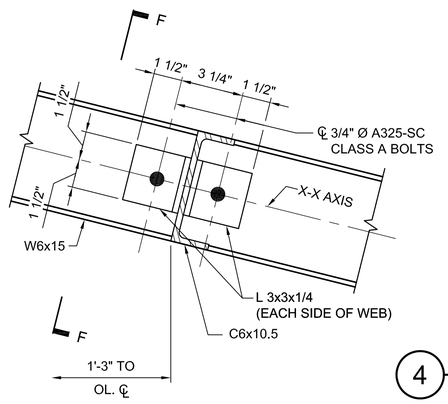

4 DETAIL
3" = 1'-0"

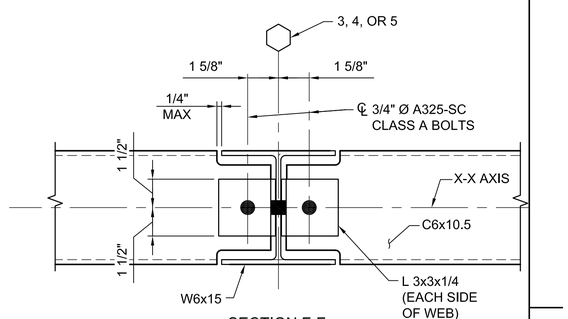

SECTION F-F

- FINAL DESIGN -
FOR AGENCY APPROVAL ONLY

REGISTERED PROFESSIONAL ENGINEER
VINOD M. BADANI
C-041281
EXP. DATE 3/31/17
CIVIL
STATE OF CALIFORNIA

E2 Consulting Engineers, Inc.
1900 Powell Street, Ste. 250
Emeryville, CA 94608
(510) 652-1164

ARCADIS

NO.	DATE	DESCRIPTION	GM/SPEC	DWN	CHKD	SUPV	APVD BY
1	11/18/15	FINAL DESIGN		MD	KJ	VMB	RAO
0	09/08/14	PRE-FINAL (90%) DESIGN		MD	KJ	VMB	VMB

REVISIONS

APPROVED BY	RAO
SO	
SUPV	
DSGN	
DWN	
CHKD	
OK	
DATE	
SCALES	AS NOTED

TOPOCK GROUNDWATER REMEDIATION PROJECT
REMEDY - PRODUCED WATER CONDITIONING PLANT SECTIONS AND DETAILS
GAS TRANSMISSION & DISTRIBUTION
PACIFIC GAS AND ELECTRIC COMPANY
SAN FRANCISCO, CALIFORNIA

MICROFILM	
BILL OF MATL	
DWG LIST	
SUPSDS	
SUPSD BY	
SHEET NO.	of SHEETS
S-12-13	REV 0

E2-S-XXX-1203.dwg

N1808

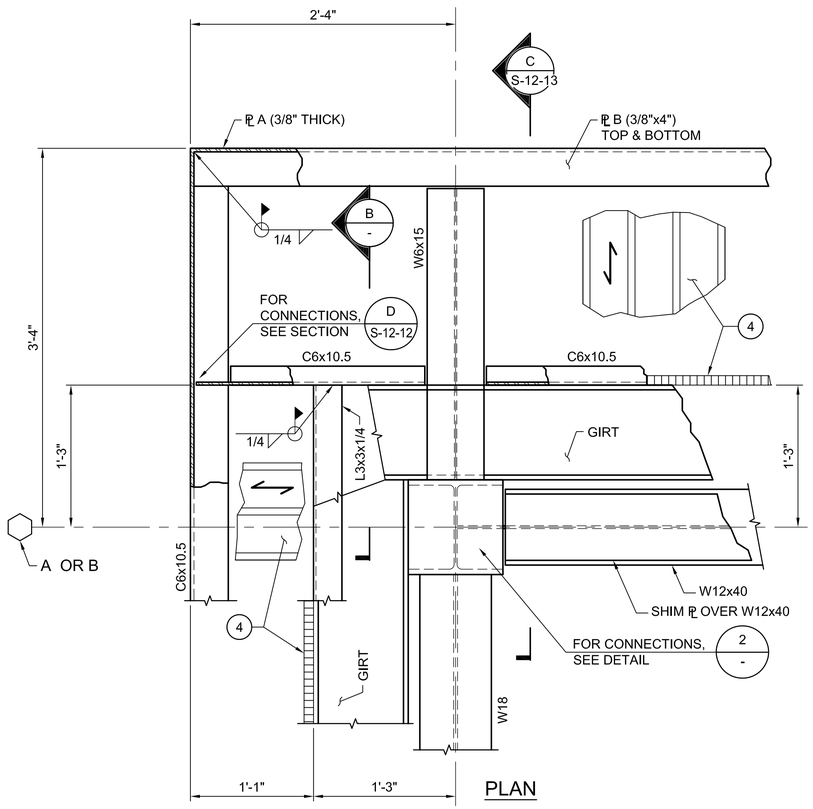

PLAN

1 DETAIL
1 1/2" = 1'-0"
S-12-04

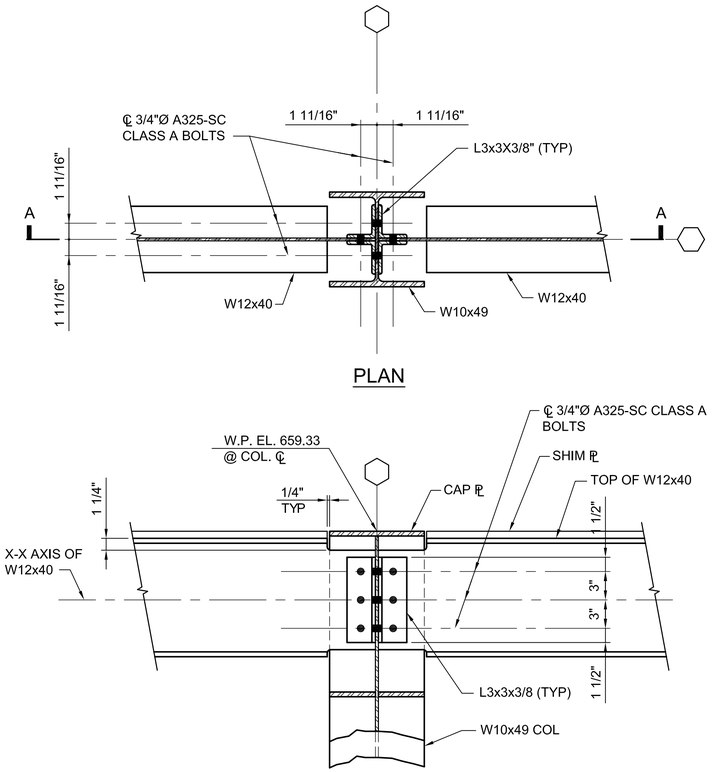

PLAN

SECTION A-A

2 DETAIL
1 1/2" = 1'-0"
S-12-04, S-12-13

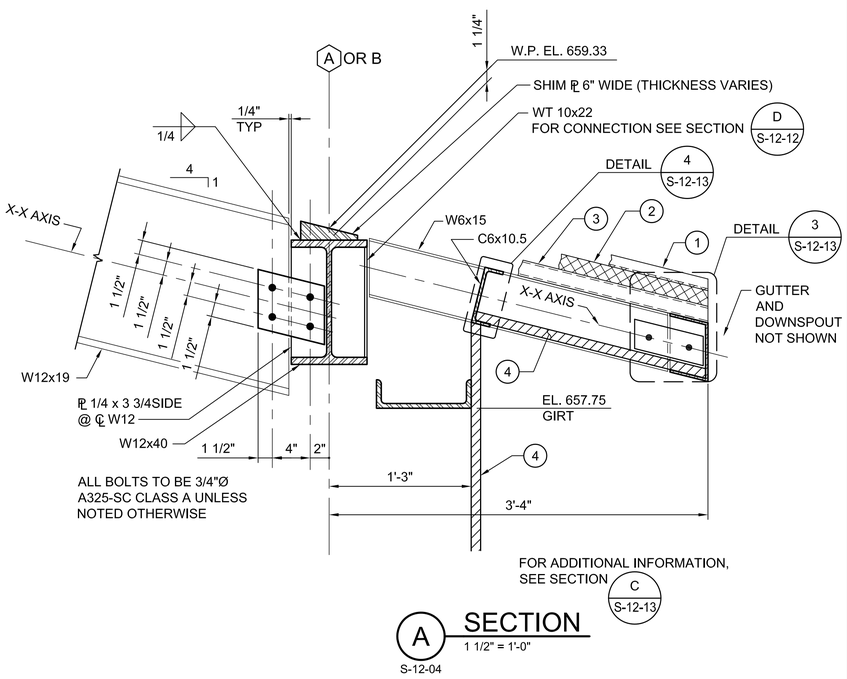

A SECTION
1 1/2" = 1'-0"
S-12-04

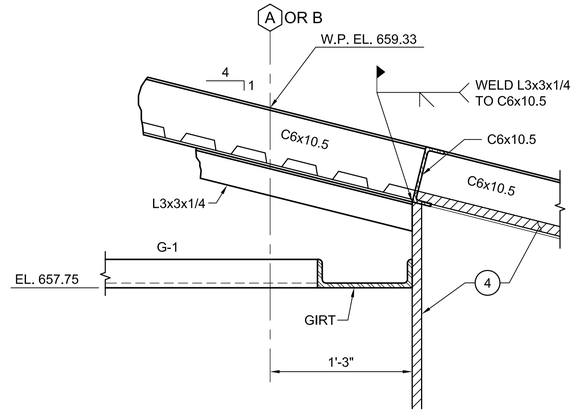

B SECTION
1 1/2" = 1'-0"
-

KEY NOTES:

1. METAL STANDING SEAM ROOF.
2. 2" RIGID INSULATION
3. METAL ROOF DECK
4. INSULATED METAL SIDING

- FINAL DESIGN -
FOR AGENCY APPROVAL ONLY

REGISTERED PROFESSIONAL ENGINEER
VINOD M. BADANI
C-041281
EXP. DATE 3/31/17
CIVIL
STATE OF CALIFORNIA

E2 Consulting Engineers, Inc.
1900 Powell Street, Ste. 250
Emeryville, CA 94608
(510) 652-1164

ARCADIS

NO.	DATE	DESCRIPTION	GM/SPEC	DWN	CHKD	SUPV	APVD BY
1	11/18/15	FINAL DESIGN		MD	KJ	VMB	RAO
0	09/08/14	PRE-FINAL (90%) DESIGN		MD	KJ	VMB	VMB

REVISIONS

APPROVED BY: RAO
SO
SUPV
DSGN
DWN
CHKD
OK
DATE
SCALES 1 1/2"=1'-0"

TOPOCK GROUNDWATER REMEDIATION PROJECT
REMEDY - PRODUCED WATER CONDITIONING PLANT
SECTIONS AND DETAILS
GAS TRANSMISSION & DISTRIBUTION
PACIFIC GAS AND ELECTRIC COMPANY
SAN FRANCISCO, CALIFORNIA

MICROFILM
BILL OF MATL
DWG LIST
SUPSDS
SUPSD BY
SHEET NO. S-12-14 of SHEETS
REV 0

E2-S-XXX-1203.dwg

N180B

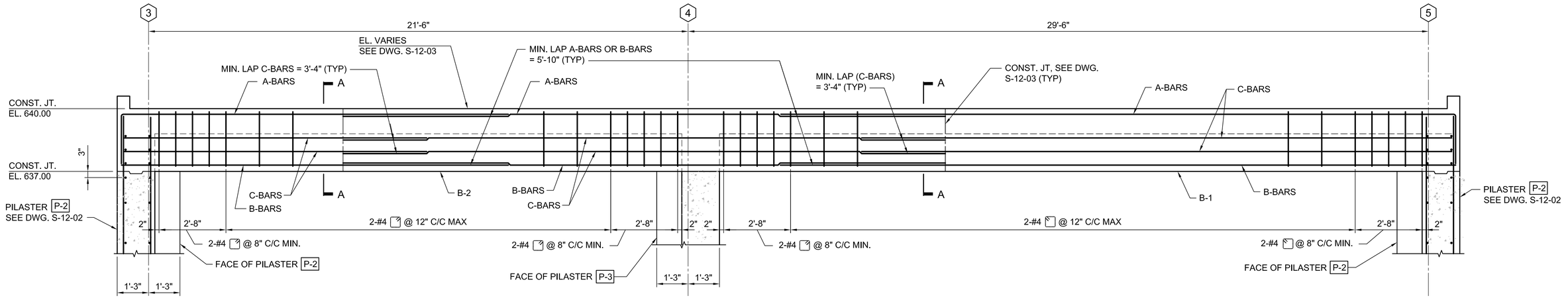

1 DETAIL - BEAM B-1 & B-2

1/2"=1'-0"

S-12-03

BEAM SCHEDULE								
BEAM MARK	SIZE		REINFORCING BARS				STIRRUPS	
	WIDTH 'B'	DEPTH 'D'	A-BARS	B-BARS	C-BARS	D-BARS	SIZE	SPACING
B-1	30	36	5-#8	5-#8	2-#5		#4	SEE DETAIL 1
B-2	30	36	5-#8	5-#8	2-#5		#4	SEE DETAIL 1

PILASTER SCHEDULE					
MARK SIZE	REINFORCING BARS				REMARKS
	VERT. BARS	DOWEL BARS	MIN. LAP	TIES	
P-1 18"x24"	6-#6	6-#6	3'-1"	#4@12"	SEE DETAIL 1/S-12-16
P-2 30"x30"	12-#8	12-#8	5'-2"	#4@12"	SEE DETAIL 2/S-12-16
P-3 30"x30"	12-#8	12-#8	5'-2"	#4@12"	SEE DETAIL 3/S-12-16

NOTES:

1. BEAM DEPTH LISTED IN TABLE ARE NOMINAL.

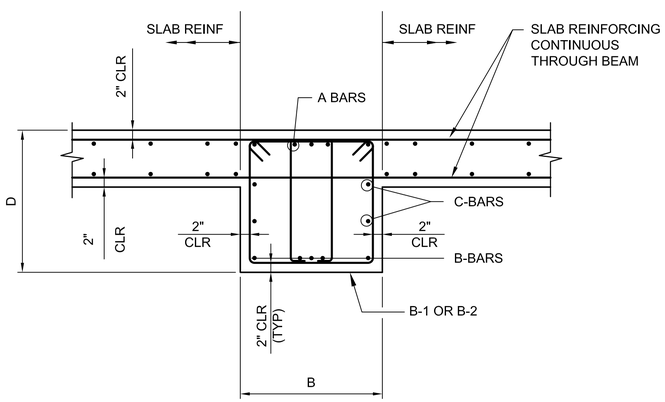

SECTION A-A

- FINAL DESIGN -
FOR AGENCY APPROVAL ONLY

REGISTERED PROFESSIONAL ENGINEER
VINOD M. BADANI
C-041281
EXP. DATE 3/31/17
CIVIL
STATE OF CALIFORNIA

E2 Consulting Engineers, Inc.
1900 Powell Street, Ste. 250
Emeryville, CA 94608
(510) 652-1164

ARCADIS

NO.	DATE	DESCRIPTION	GM/SPEC	DWN	CHKD	SUPV	APVD BY
1	11/18/15	FINAL DESIGN		MD	KJ	VMB	RAO
0	09/08/14	PRE-FINAL (90%) DESIGN		MD	KJ	VMB	VMB

REVISIONS

APPROVED BY
RAO

SO	
SUPV	
DSGN	
DWN	
CHKD	
OK	
DATE	
SCALES	AS NOTED

TOPOCK GROUNDWATER REMEDIATION PROJECT
REMEDY - PRODUCED WATER CONDITIONING PLANT BEAM AND PILASTER SCHEDULES
GAS TRANSMISSION & DISTRIBUTION
PACIFIC GAS AND ELECTRIC COMPANY
SAN FRANCISCO, CALIFORNIA

MICROFILM	
BILL OF MATL	
DWG LIST	
SUPSDS	
SUPSD BY	
SHEET NO.	of SHEETS
S-12-15	REV 0

E2-SXXX-1203.dwg

N1808

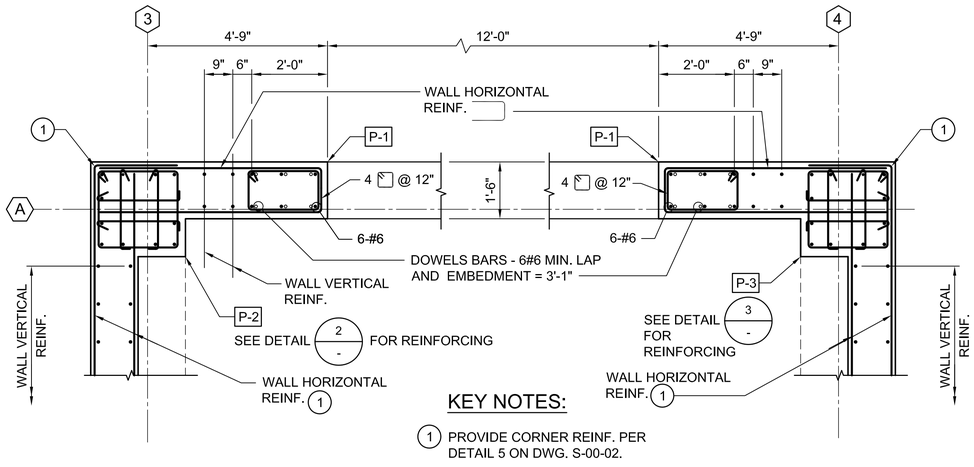

KEY NOTES:

1. PROVIDE CORNER REINF. PER DETAIL 5 ON DWG. S-00-02.

1 DETAIL -PILASTER P-1

1/2"=1'-0"

S-12-15

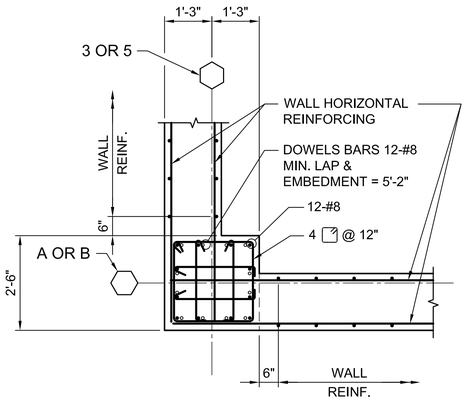

2 DETAIL -PILASTER P-2

1/2"=1'-0"

S-12-15

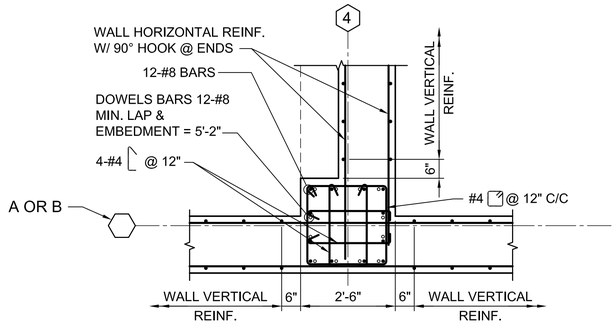

3 DETAIL -PILASTER P-3

1/2"=1'-0"

S-12-15

- FINAL DESIGN -
FOR AGENCY APPROVAL ONLY

REGISTERED PROFESSIONAL ENGINEER
VINOD M. BADANI
C-041281
EXP. DATE 3/31/17
CIVIL
STATE OF CALIFORNIA

E2 Consulting Engineers, Inc.
1900 Powell Street, Ste. 250
Emeryville, CA 94608
(510) 652-1164

ARCADIS

NO.	DATE	DESCRIPTION	GM/SPEC	DWN	CHKD	SUPV	APVD BY
1	11/18/15	FINAL DESIGN		MD	KJ	VMB	RAO
0	09/08/14	PRE-FINAL (90%) DESIGN		MD	KJ	VMB	VMB

REVISIONS

APPROVED BY	
RAO	

SO	
SUPV	VMB
DSGN	KDD
DWN	MD
CHKD	KJ
OK VMB	
DATE	6/30/14
SCALES	AS NOTED

TOPOCK GROUNDWATER REMEDIATION PROJECT

REMEDY - PRODUCED WATER CONDITIONING PLANT PILASTER DETAILS

GAS TRANSMISSION & DISTRIBUTION

PACIFIC GAS AND ELECTRIC COMPANY
SAN FRANCISCO, CALIFORNIA

MICROFILM	
BILL OF MATL	
DWG LIST	
SUPSDS	
SUPSD BY	
SHEET NO.	of SHEETS
S-12-16	REV 0

E2-S-XXX-1203.dwg

N1808

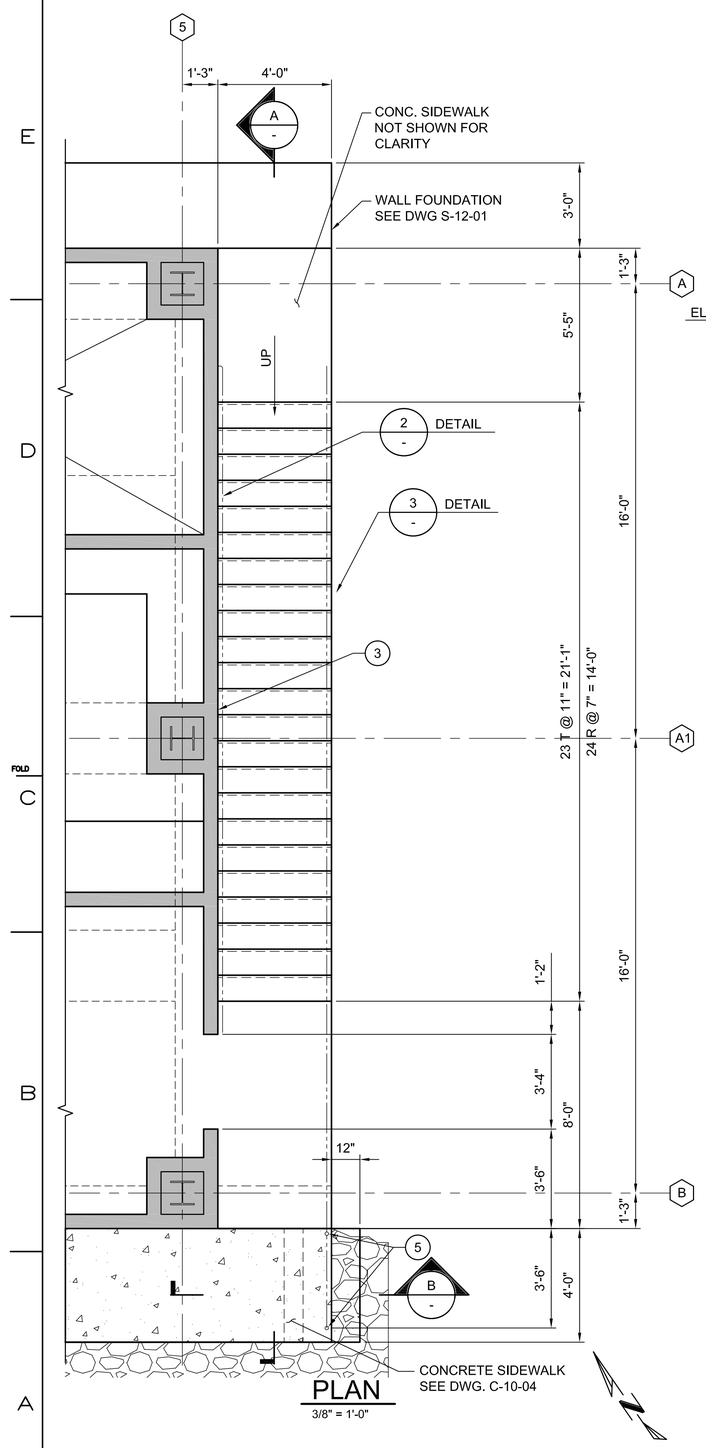

PLAN
3/8" = 1'-0"

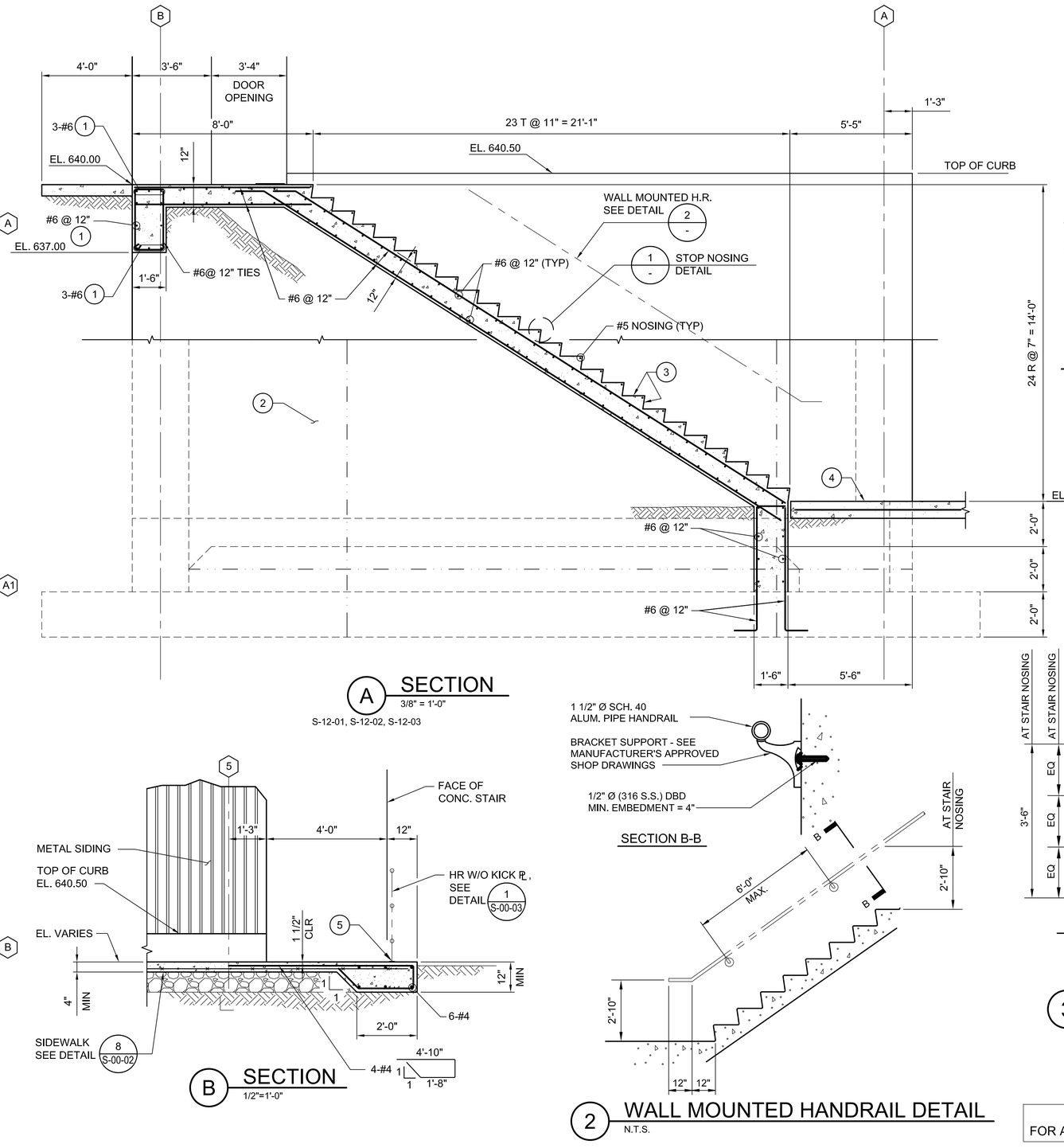

A SECTION
3/8" = 1'-0"
S-12-01, S-12-02, S-12-03

B SECTION
1/2"=1'-0"

2 WALL MOUNTED HANDRAIL DETAIL
N.T.S.

KEY NOTES:

1. EXTEND #6 BARS 3'-1" INTO WALL.
2. REMEDY BUILDING WALL (BEHIND)
3. PROVIDE 1/2" x 1/2" JOINT SEALANT.
4. CONC. SIDEWALK, SEE GRADING PLANS.
5. TOP MOUNTED HR POST, SEE DETAIL 4 ON DWG. S-00-03.

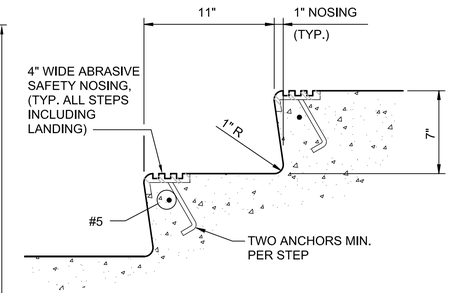

1 STEP NOSING DETAIL
N.T.S.

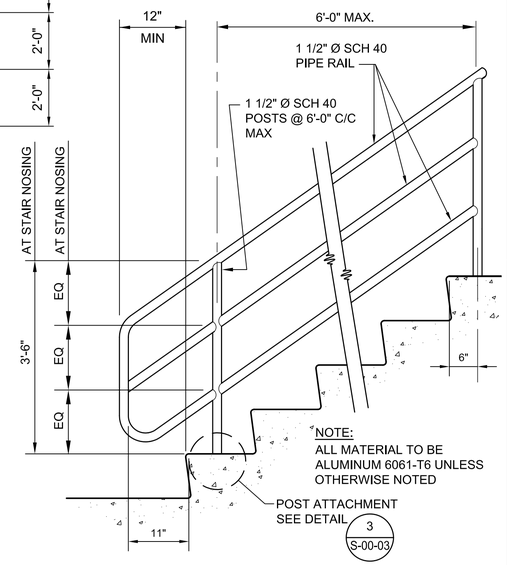

3 HANDRAIL @ STAIRS DETAIL
N.T.S.

- FINAL DESIGN -
FOR AGENCY APPROVAL ONLY

REGISTERED PROFESSIONAL ENGINEER
VINOD M. BADANI
C-041281
EXP. DATE 3/31/17
CIVIL
STATE OF CALIFORNIA

E2 Consulting Engineers, Inc.
1900 Powell Street, Ste. 250
Emeryville, CA 94608
(510) 652-1164

ARCADIS

NO.	DATE	DESCRIPTION	GM/SPEC	DWN	CHKD	SUPV	APVD BY
1	11/18/15	FINAL DESIGN		MD	KJ	VMB	RAO
0	09/08/14	PRE-FINAL (90%) DESIGN		MD	KJ	VMB	VMB

REVISIONS

APPROVED BY	
RAO	SO
	SUPV
	DSGN
	DWN
	CHKD
	OK
	DATE
	SCALES: AS NOTED

TOPOCK GROUNDWATER REMEDIATION PROJECT
REMEDY - PRODUCED WATER CONDITIONING PLANT PLAN, SECTIONS AND DETAILS
GAS TRANSMISSION & DISTRIBUTION
PACIFIC GAS AND ELECTRIC COMPANY
SAN FRANCISCO, CALIFORNIA

MICROFILM	
BILL OF MATL	
DWG LIST	
SUPSDS	
SUPSD BY	
SHEET NO.	of SHEETS
S-12-17	REV 0

E2-S-XXX-1204.dwg

N1808

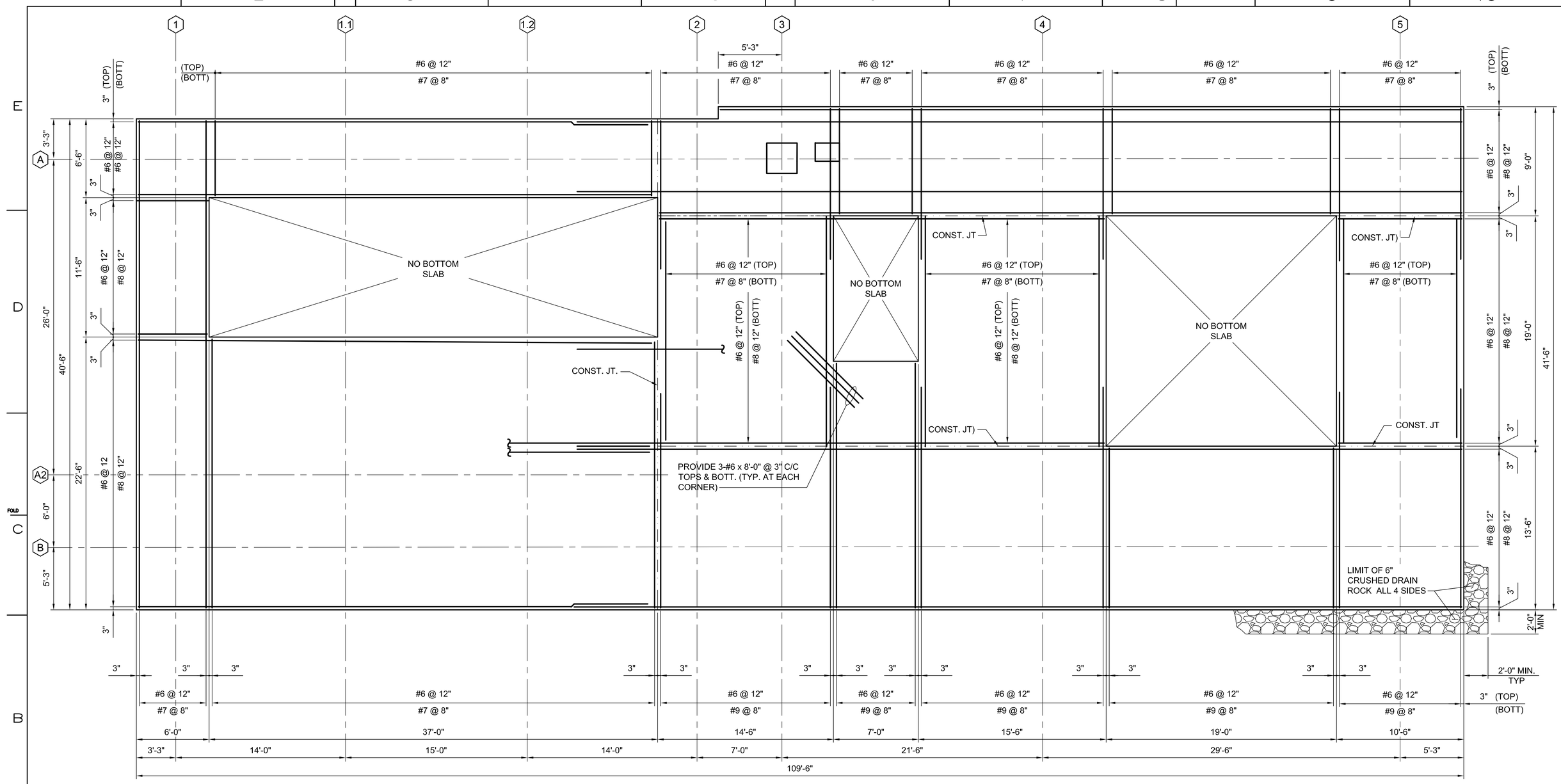

BOTTOM SLAB REINF. PLAN

1/4" = 1'-0"

NOTES:

1. MIN. LAP ARE:

BAR SIZE #	LAP
6	4'-0"
7	5'-10"
8	6'-8"
9	7'-7"

2. TOP AND BOTT. BARS TO HAVE 90° BEND @ FACE OF BOTT. SLAB.
3. MINIMUM COVER FOR REINFORCING BARS"
   TOP = 2"
   BOTT. = 3"

- FINAL DESIGN -
FOR AGENCY APPROVAL ONLY

REGISTERED PROFESSIONAL ENGINEER
VINOD M. BADANI
C-041281
EXP. DATE 3/31/17
CIVIL
STATE OF CALIFORNIA

E2 Consulting Engineers, Inc.
1900 Powell Street, Ste. 250
Emeryville, CA 94608
(510) 652-1164

ARCADIS

NO.	DATE	DESCRIPTION	GM/SPEC	DWN	CHKD	SUPV	APVD BY
1	11/18/15	FINAL DESIGN	MD	KJ	VMB	RAO	
0	09/08/14	PRE-FINAL (90%) DESIGN	MD	KJ	VMB	VMB	

REVISIONS

APPROVED BY	
RAO	SO
	SUPV
	DSGN
	DWN
	CHKD
	OK
	DATE
	SCALES 1/4"=1'-0"

TOPOCK GROUNDWATER REMEDIATION PROJECT
REMEDY - PRODUCED WATER CONDITIONING PLANT FOUNDATION REINFORCING PLAN
GAS TRANSMISSION & DISTRIBUTION
PACIFIC GAS AND ELECTRIC COMPANY
SAN FRANCISCO, CALIFORNIA

MICROFILM	
BILL OF MATL	
DWG LIST	
SUPSDS	
SUPSD BY	
SHEET NO.	of SHEETS
S-12-18	REV 0

E2-S-XXX-1201.dwg

N1808

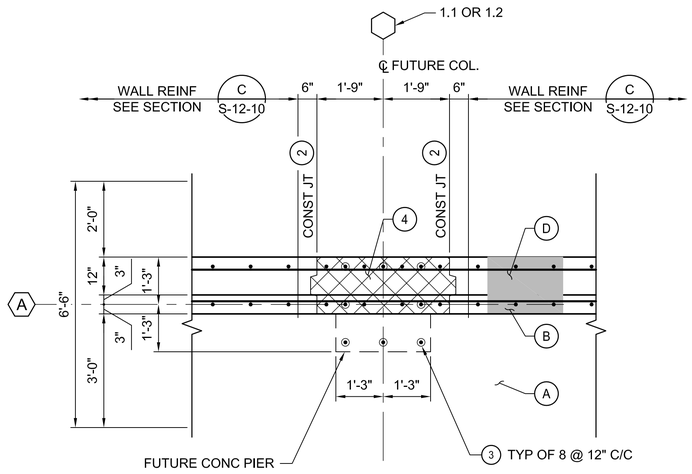

NOTES:

1. SLAB-ON-GRADE NOT SHOWN FOR CLARITY.

PLAN

1 DETAIL
1/2" = 1'-0"

S-12-01, S-12-02

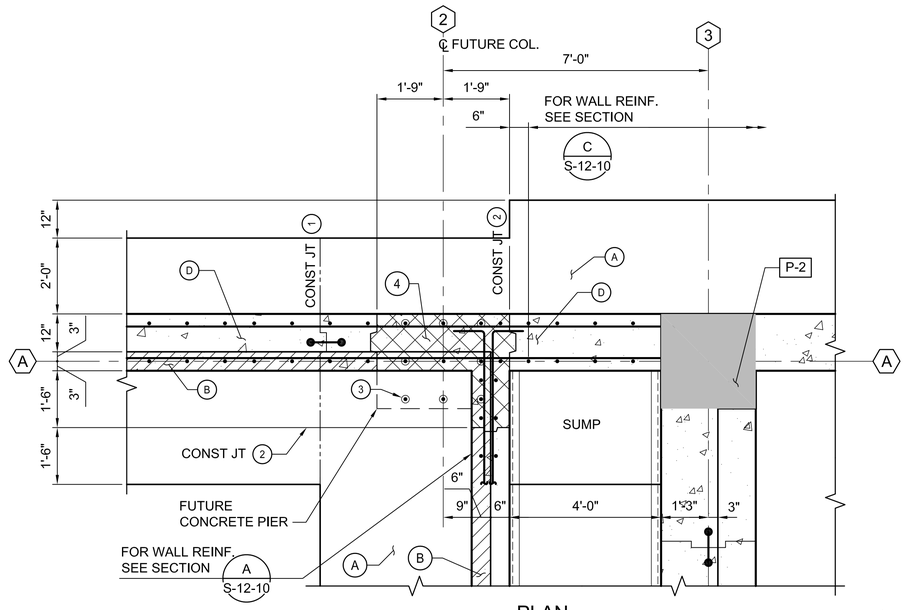

PLAN

3 DETAIL
1/2" = 1'-0"

S-12-01, S-12-02

KEY NOTES:

1. FOOTING CONST. JT. W/ 9" PVC WATERSTOP. SEE DETAIL 2 ON DWG. S-00-02.
2. WALL VERTICAL CONST. JT. W/O WATERSTOP. SEE DETAIL 3 ON DWG. S-00-02.



3. PROVIDE 8-#7 DOWELS W/ THREADED PLASTIC CAP FOR FUTURE BARS. SEE DETAIL 5.
4. WALL TO BE REMOVED FOR FUTURE CONSTRUCTION.

TABLE OF ELEVATION		
EL. ⬡	ELEVATION	REMARK
A	622.00	TOP OF FOOTING
B	624.00	TOP OF SHELF FOR SLAB-ON-GRADE
C	632.00	TOP OF WALL
D	626.17	TOP OF CONC.
E	626.00	TOP OF GRATING OR TOP OF WALL

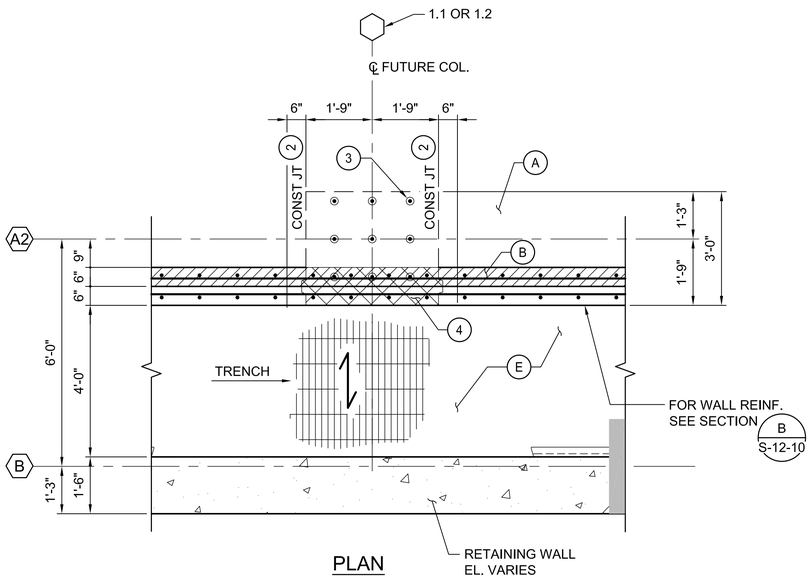

PLAN

2 DETAIL
1/2" = 1'-0"

S-12-01, S-12-02

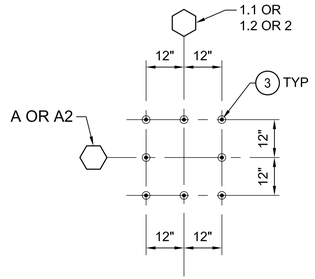

5 DETAIL
1/2" = 1'-0"

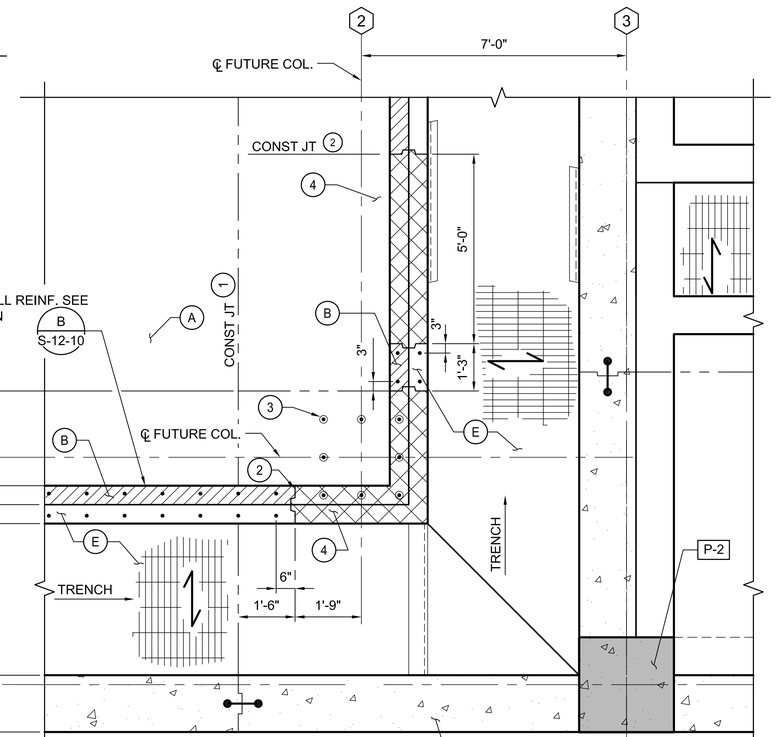

NOTES:
1. SLAB-ON-GRADE NOT SHOWN FOR CLARITY

PLAN

4 DETAIL
1/2" = 1'-0"

S-12-01, S-12-02

RETAINING WALL EL. VARIES

REGISTERED PROFESSIONAL ENGINEER
VINOD M. BADANI
C-041281
EXP. DATE 3/31/17
CIVIL
STATE OF CALIFORNIA

- FINAL DESIGN -
FOR AGENCY APPROVAL ONLY

E2 Consulting Engineers, Inc.
1900 Powell Street, Ste. 250
Emeryville, CA 94608
(510) 652-1164

ARCADIS

NO.	DATE	DESCRIPTION	GM/SPEC	DWN	CHKD	SUPV	APVD	BY
2	11/18/15	FINAL DESIGN		MD	KJ	VMB	RAO	
0	09/08/14	PRE-FINAL (90%) DESIGN		MD	KJ	VMB	VMB	

REVISIONS

APPROVED BY	
RAO	SO
	SUPV
	DSGN
	DWN
	CHKD
	OK
	DATE
	SCALES 1/2"=1'-0"

TOPOCK GROUNDWATER REMEDIATION PROJECT
REMEDY - PRODUCED WATER CONDITIONING PLANT BUILDING SECTIONS AND DETAILS
GAS TRANSMISSION & DISTRIBUTION
PACIFIC GAS AND ELECTRIC COMPANY
SAN FRANCISCO, CALIFORNIA

MICROFILM	
BILL OF MATL	
DWG LIST	
SUPSDS	
SUPSD BY	
SHEET NO.	of SHEETS
S-12-19	REV 0

E2-S-XXX-1201.dwg

N1808

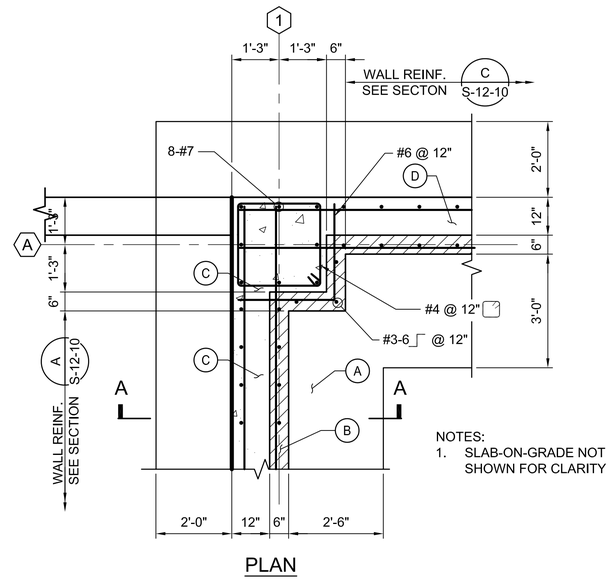

PLAN

1 DETAIL
1/2" = 1'-0"
S-12-01, S-12-02

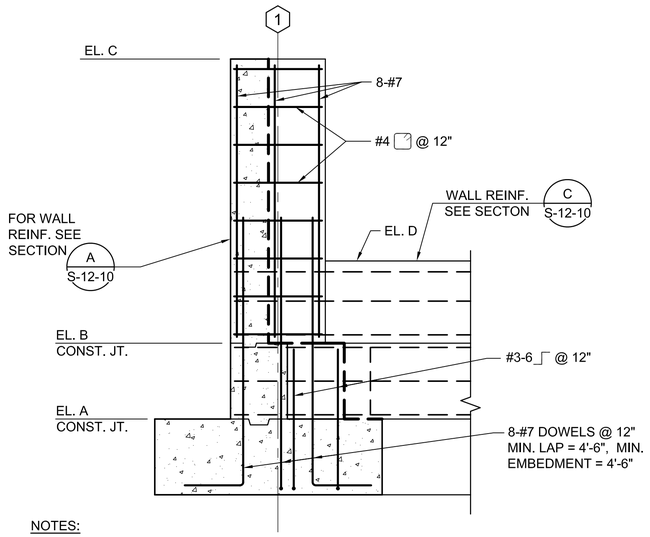

NOTES:

1. SLAB-ON-GRADE NOT SHOWN FOR CLARITY.

SECTION A-A
1/2" = 1'-0"

PLAN

NOTES:

1. SLAB-ON-GRADE NOT SHOWN FOR CLARITY.

2 DETAIL
1/2" = 1'-0"
S-12-01, S-12-02

KEY NOTES:

FOR KEY NOTES, SEE DWG. S-12-19.

TABLE OF ELEVATION		
EL. ◯	ELEVATION	REMARK
A	622.00	TOP OF FOOTING
B	624.00	TOP OF SHELF FOR SLAB-ON-GRADE
C	632.00	TOP OF WALL
D	626.17	TOP OF CONC.
E	626.00	TOP OF GRATING OR TOP OF WALL

- FINAL DESIGN -
FOR AGENCY APPROVAL ONLY

REGISTERED PROFESSIONAL ENGINEER
VINOD M. BADIANI
C-041281
EXP. DATE 3/31/17
CIVIL
STATE OF CALIFORNIA

E2 Consulting Engineers, Inc.
1900 Powell Street, Ste. 250
Emeryville, CA 94608
(510) 652-1164

ARCADIS

NO.	DATE	DESCRIPTION	GM/SPEC	DWN	CHKD	SUPV	APVD BY
1	11/18/15	FINAL DESIGN		MD	KJ	VMB	RAO
0	09/08/14	PRE-FINAL (90%) DESIGN		MD	KJ	VMB	VMB

REVISIONS

APPROVED BY	
	SO
RAO	SUPV
	DSGN
	DWN
	CHKD
	OK
	DATE
	SCALES 1/2"=1'-0"

TOPOCK GROUNDWATER REMEDIATION PROJECT
REMEDY - PRODUCED WATER CONDITIONING PLANT BUILDING SECTIONS AND DETAILS
GAS TRANSMISSION & DISTRIBUTION
PACIFIC GAS AND ELECTRIC COMPANY
SAN FRANCISCO, CALIFORNIA

MICROFILM	
BILL OF MATL	
DWG LIST	
SUPSDS	
SUPSD BY	
SHEET NO. of	SHEETS
S-12-20	REV 0

E2-S-XXX-1201.dwg

N180B

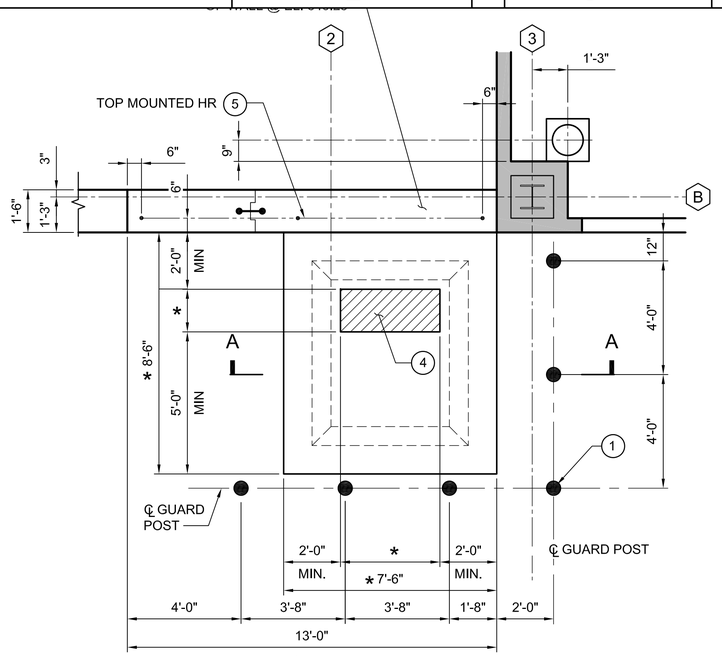

PLAN

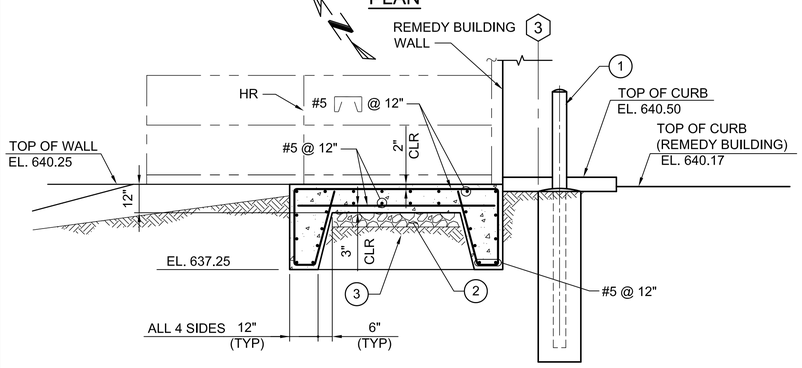

SECTION A-A

1 DETAIL - HEAT PUMP PAD

3/8" = 1'-0"

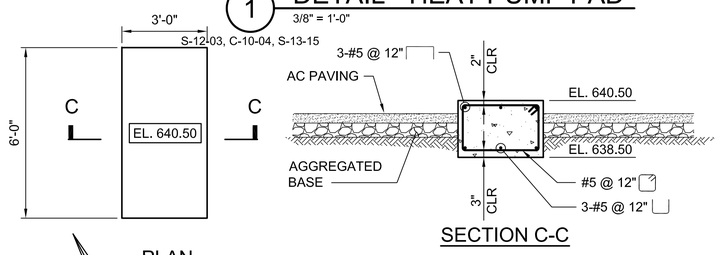

SECTION C-C

PLAN

4 DETAIL - GENERATOR CONNECTION PANEL PAD

3/8" = 1'-0"

C-10-04

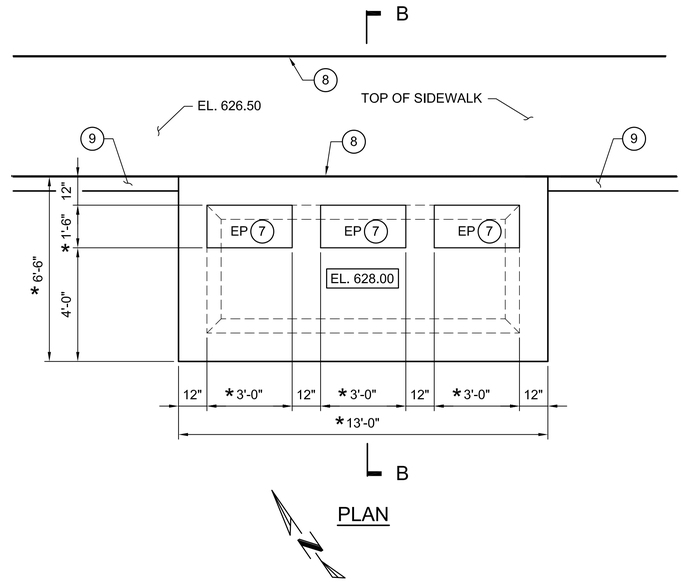

PLAN

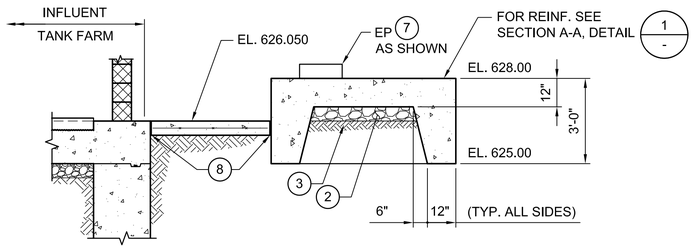

SECTION B-B

2 DETAIL - COMPRESSOR PAD

3/8" = 1'-0"

C-10-04

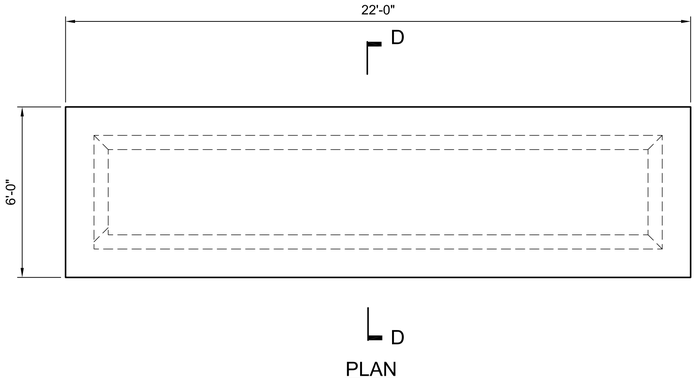

PLAN

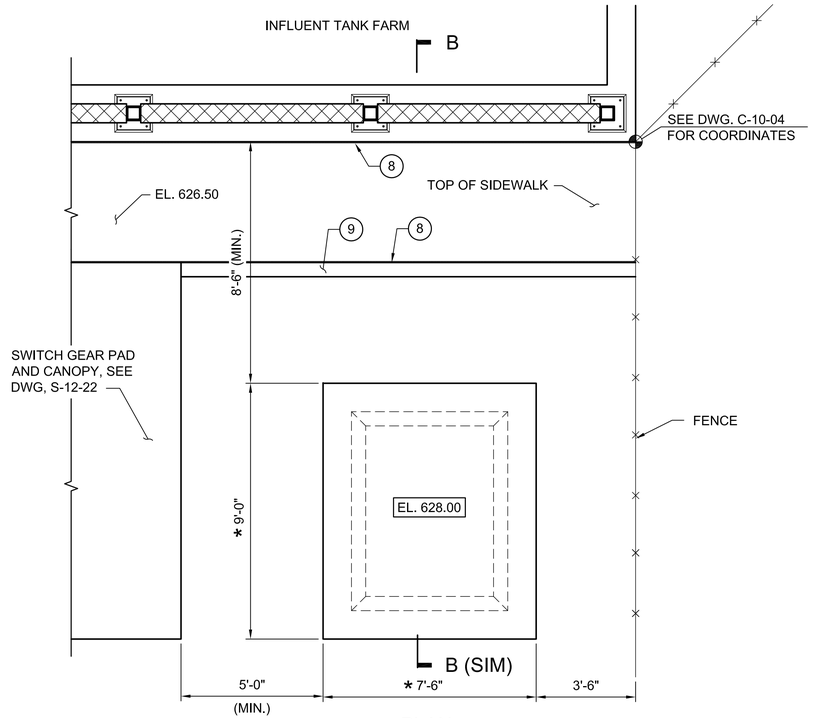

PLAN

3 DETAIL - TRANSFORMER PAD

3/8" = 1'-0"

C-10-04

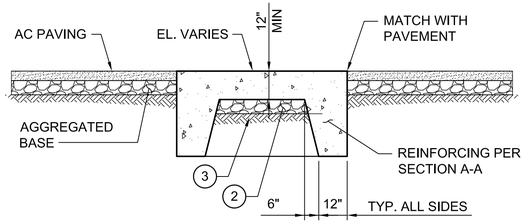

SECTION D-D

5 DETAIL - GENERATOR PAD

3/8" = 1'-0"

C-10-04

KEY NOTES;

1. GUARD POSTS, SEE DETAIL 5 ON C-00-07.
2. 6-INCH THICK, CRUSHED ROCK.
3. SUBGRADE. COMPACTED TO 95% PER ASTM D 1557.
4. HEAT PUMP. DIMENSIONS AND ANCHORAGE PER APPROVED SUBMITTALS.
5. TOP MOUNTED HR WITH KICK PLATE, SEE DETAIL 4 ON S-00-03.
6. PROVIDE CORNER REINFORCING PER DETAIL 5 ON S-00-02.
7. EP INDICATES EQUIPMENT PAD, SEE DETAIL 10 ON DWG. S-00-02.
8. 1/2" EXPANSION JOINT MATERIAL W/ 1/2"x1/2" SEALANT AT TOP.
9. 6-INCH CONCRETE CURB, SEE DETAIL 4 ON DWG. C-07-09.

NOTES:

* 1. DIMENSIONS MARKED WITH AN ASTERISK TO BE VERIFIED WITH APPROVED SUBMITTALS.

REGISTERED PROFESSIONAL ENGINEER — VINOD M. BADANI — C-041281 — EXP. DATE 3/31/17 — CIVIL — STATE OF CALIFORNIA

- FINAL DESIGN - FOR AGENCY APPROVAL ONLY

E2 Consulting Engineers, Inc.
1900 Powell Street, Ste. 250
Emeryville, CA 94608
(510) 652-1164

ARCADIS

NO.	DATE	DESCRIPTION	GM/SPEC	DWN	CHKD	SUPV	APVD BY
1	11/18/15	FINAL DESIGN		MD	KJ	VMB	RAO
0	09/08/14	PRE-FINAL (90%) DESIGN		MD	KJ	VMB	VMB

REVISIONS

APPROVED BY	
RAO	SO
	SUPV
	DSGN
	DWN
	CHKD
	OK
	DATE
	SCALES 3/8"=1'-0"

TOPOCK GROUNDWATER REMEDIATION PROJECT
REMEDY - PRODUCED WATER CONDITIONING PLANT
EQUIP. PAD-PLANS, SECTIONS AND DETAILS
GAS TRANSMISSION & DISTRIBUTION
PACIFIC GAS AND ELECTRIC COMPANY
SAN FRANCISCO, CALIFORNIA

MICROFILM	
BILL OF MATL	
DWG LIST	
SUPSDS	
SUPSD BY	
SHEET NO.	of SHEETS
S-12-21	REV 0

E2-S-XXX-1201.dwg

N1808

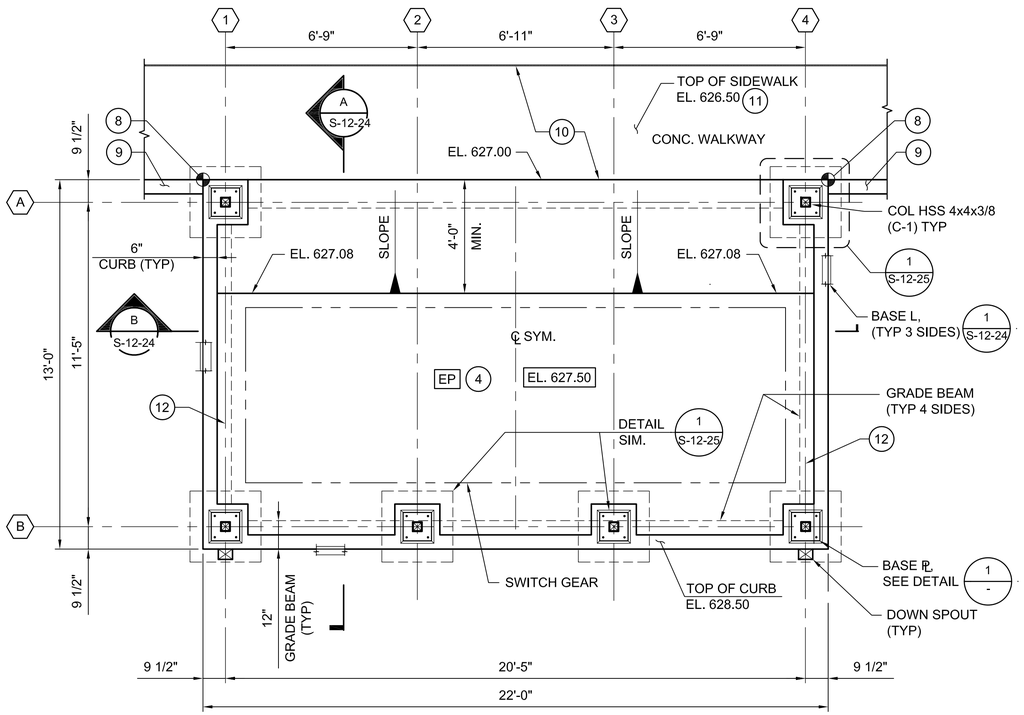

FOUNDATION AND FLOOR PLAN

3/8" = 1'-0"

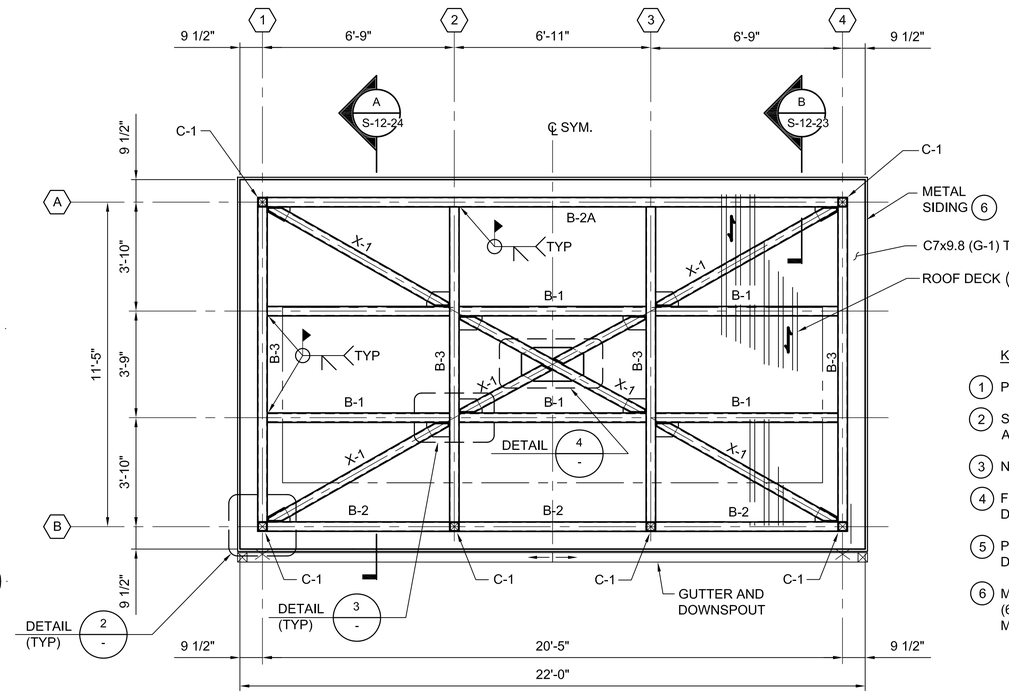

ROOF FRAMING PLAN

3/8" = 1'-0"

BEAM COLUMN SCHEDULE			
MARK	SIZE	WALL "T"	REMARKS
B-1	HSS 4x4	1/4"	
B-2	HSS 4x4	1/4"	
B-2A	HSS 6x4	1/4"	
B-3	HSS 4x4	3/8"	
C-1	HSS 4x4	3/8"	
X-1	HSS 4x4	3/8"	
X-2	HSS 4x4	1/4"	DWG. S-12-23
X-3	HSS 4x4	3/8"	DWG. S-12-24
G-1	C7x9.8		GIRT

KEY NOTES

1. PROVIDE 6" THICK, CRUSHED ROCK
2. STRUCTURAL FILL ~ 95% COMPACTION PER ASTM D 1557
3. NOT USED.
4. FOR EQUIPMENT PAD (EP) SEE DETAIL 10 ON DWG. S-00-02.
5. PROVIDE CORNER REINFORCING PER DETAIL 5 ON DWG. S-00-02.
6. METAL SIDING: 3/4" DEEP X 36" WIDE PANEL (6 RIBS @ 6" C/C PER PANEL) GALVANIZED, 24 GAUGE MINIMUM PROPERTIES/LF OF WIDTH:
   +I = 0.0323 IN^4
   -I = 0.0220 IN^4
   +S = 0.0592 IN^3
   -S = 0.0538 IN^3
7. METAL ROOF DECK: 1 1/2" DEEP X 36" WIDE PANEL (6 RIBS @ 6" C/C PER PANEL) GALVANIZED, 18 GAUGE MINIMUM PROPERTIES/LF OF WIDTH:
   I = 0.29 IN /LF
   +S = 0.315 IN /LF
   -S = 0.316 IN /LF

CONNECTION:
1. USE #2 GALVANIZED SCREWS OR 1/2"Ø PUDDLE WELDS AT 6" C/C (6 PER SHEET MIN. FOR 36" WIDE PANELS) TO ATTACH ROOF DECK TO SUPPORTING MEMBERS.
2. USE # 2 GALVANIZED SCREWS @ 12" C/C FOR SIDE CONNECTIONS.

8. FOR COORDINATES, SEE DWG. C-10-04.
9. 6" CONCRETE CURB. SEE DETAIL 4 ON DWG. C-07-09.
10. 1/2" EXPANSION JOINT MATERIAL W/ 1/2"xz1/2" JOINT SALANT AT TOP.
11. FOR SIDEWALK, SEE DETAIL 8 ON DWG. S-00-02.
12. PROVIDE X-BRACING PER SECTION A ON DWG. S-12-24.

NOTE:

1. FOR DESIGN LOADS. SEE DWG. S-12-23.

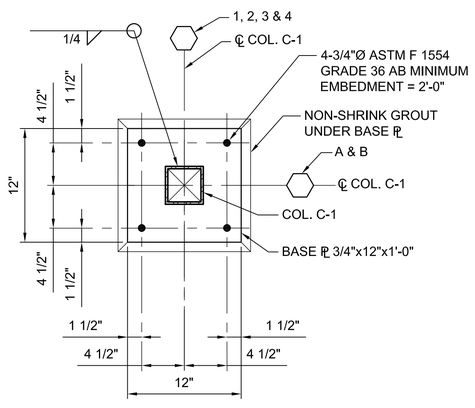

1 DETAIL

1 1/2"" = 1'-0"

S-12-24

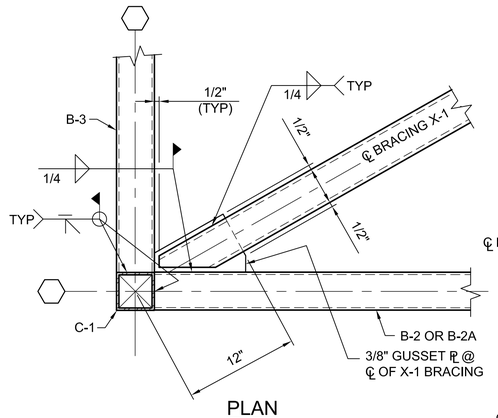

PLAN

2 DETAIL

1 1/2"" = 1'-0"

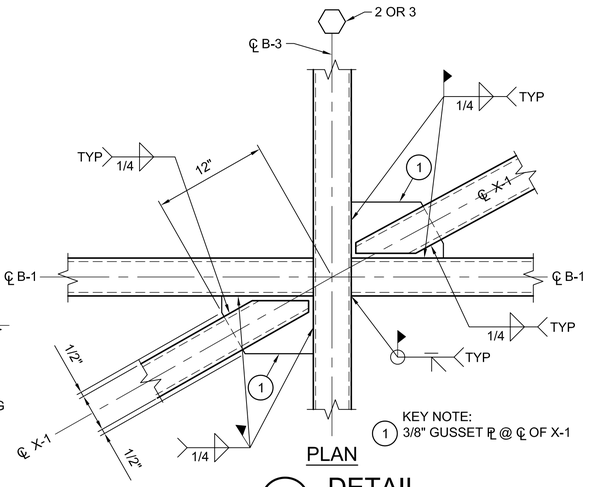

PLAN

KEY NOTE:
1 3/8" GUSSET ℄ @ ℄ OF X-1

3 DETAIL

1 1/2"" = 1'-0"

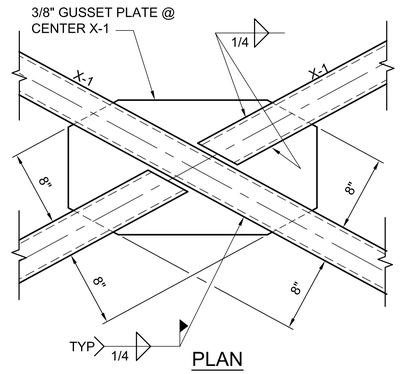

PLAN

4 DETAIL

1-1/2" = 1'-0"

S-12-24

- FINAL DESIGN -
FOR AGENCY APPROVAL ONLY

REGISTERED PROFESSIONAL ENGINEER
VINOD M. BADANI
C-041281
EXP. DATE 3/31/17
CIVIL
STATE OF CALIFORNIA

E2 Consulting Engineers, Inc.
1900 Powell Street, Ste. 250
Emeryville, CA 94608
(510) 652-1164

ARCADIS

NO.	DATE	DESCRIPTION	GM/SPEC	DWN	CHKD	SUPV	APVD BY
1	11/18/15	FINAL DESIGN		MD	KJ	VMB	RAO
0	09/08/14	PRE-FINAL (90%) DESIGN		MD	KJ	VMB	VMB

REVISIONS

APPROVED BY	
RAO	

SO	
SUPV	VMB
DSGN	KJ
DWN	MD
CHKD	KDD
OK VMB	
DATE	6/30/14
SCALES	3/8"=1'-0"

TOPOCK GROUNDWATER REMEDIATION PROJECT
SWITCH GEAR CANOPY PLANS AND DETAILS
GAS TRANSMISSION & DISTRIBUTION
PACIFIC GAS AND ELECTRIC COMPANY
SAN FRANCISCO, CALIFORNIA

MICROFILM	
BILL OF MATL	
DWG LIST	
SUPSDS	
SUPSD BY	
SHEET NO.	of SHEETS
S-12-22	REV 0

E2-S-XXX-1203.dwg

N1808

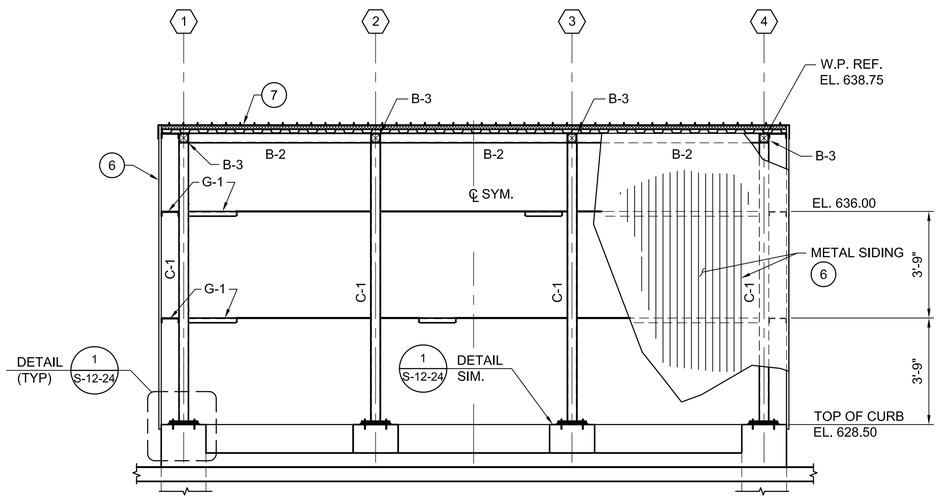

SOUTH ELEVATION @ COL. B

3/8" = 1'-0"

FOR KEY NOTES
SEE DWG. S-12-22

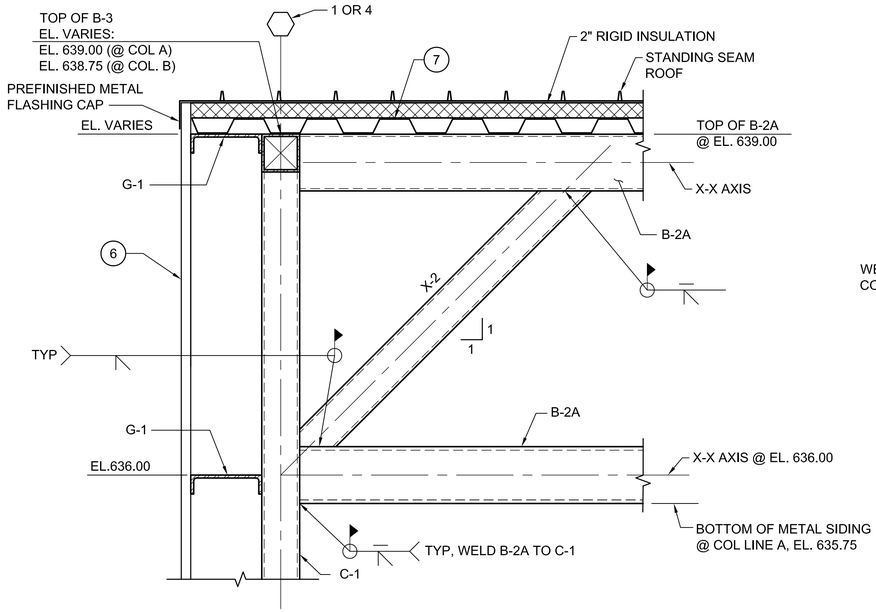

1 DETAIL

1 1/2"" = 1'-0"

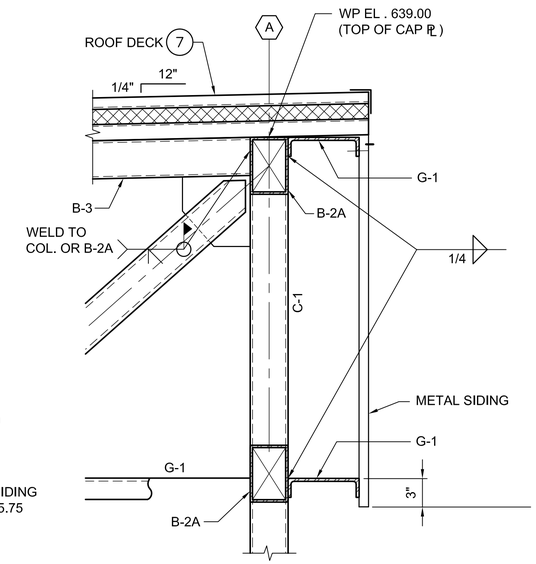

B SECTION

1-1/2" = 1'-0"

S-12-22, S-12-24

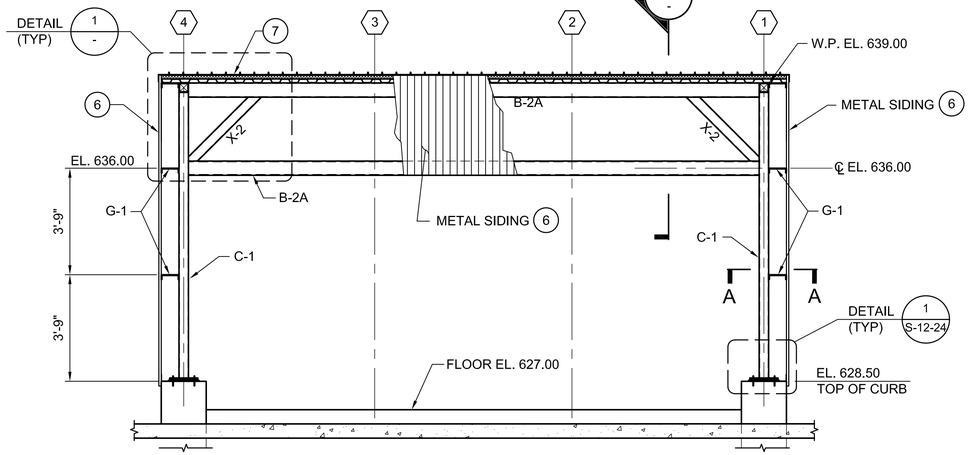

NORTH ELEVATION @ COL. A

3/8" = 1'-0"

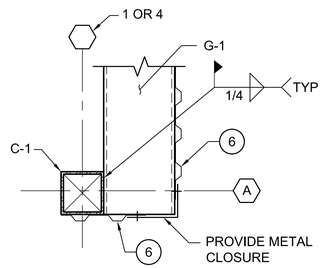

SECTION A-A

DESIGN LOADS

1. WIND LOADS

DESIGN HORIZONTAL WIND
LOADS ON VERTICAL SURFACES:

20 PSF (MINIMUM)
BASIC WIND SPEED: 100 MPH
IMPORTANCE FACTOR: 1.25

2. SEISMIC LOADS

CBC, 2013 SITE CLASS: D
SEISMIC DESIGN CATEGORY: D

S_s = 0.230
S_1 = 0.120
S_{MS} = 0.368
S_{M1} = 0.279
S_{DS} = 0.245
S_{D1} = 0.168

IMPORTANCE FACTOR: 1.25

REGISTERED PROFESSIONAL ENGINEER
VINOD M. BADANI
C-041281
EXP. DATE 3/31/17
CIVIL
STATE OF CALIFORNIA

- FINAL DESIGN -
FOR AGENCY APPROVAL ONLY

E2 Consulting Engineers, Inc.
1900 Powell Street, Ste. 250
Emeryville, CA 94608
(510) 652-1164

ARCADIS

NO.	DATE	DESCRIPTION	GM/SPEC	DWN	CHKD	SUPV	APVD BY
1	11/18/15	FINAL DESIGN		MD	KJ	VMB	RAO
0	09/08/14	PRE-FINAL (90%) DESIGN		MD	KJ	VMB	VMB

REVISIONS

APPROVED BY	
	RAO

SO	
SUPV	
DSGN	
DWN	
CHKD	
OK	
DATE	
SCALES	3/8"=1'-0"

TOPOCK GROUNDWATER REMEDIATION PROJECT
SWITCH GEAR CANOPY FRAMING ELEVATIONS SECTIONS AND DETAILS
GAS TRANSMISSION & DISTRIBUTION
PACIFIC GAS AND ELECTRIC COMPANY
SAN FRANCISCO, CALIFORNIA

MICROFILM	
BILL OF MATL	
DWG LIST	
SUPSDS	
SUPSD BY	
SHEET NO.	of SHEETS
S-12-23	REV 0

E2-SXXX-1203.dwg

N1808

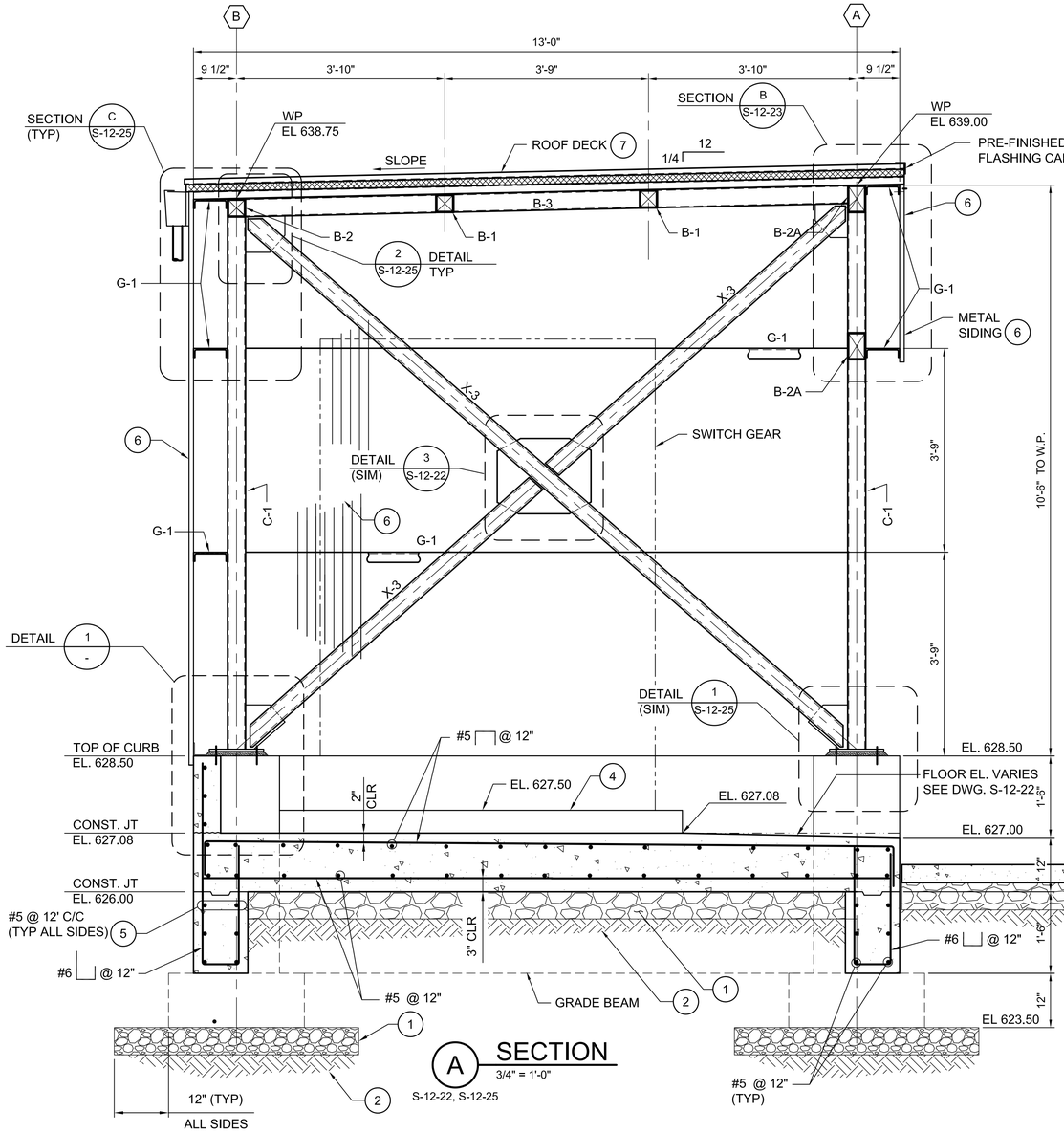

A SECTION
3/4" = 1'-0"
S-12-22, S-12-25

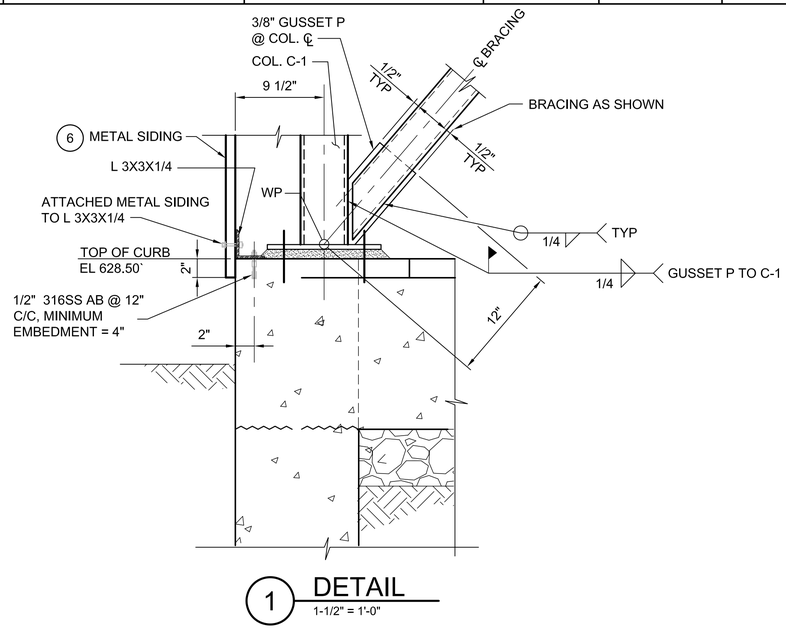

1 DETAIL
1-1/2" = 1'-0"

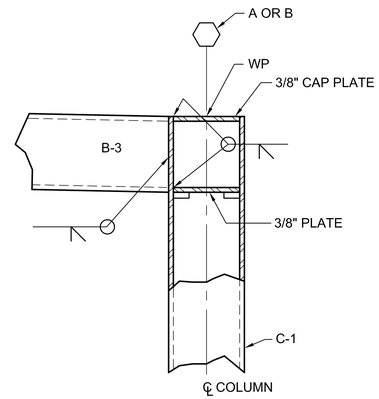

2 DETAIL
3" = 1'-0"

B SECTION
3/4" = 1'-0"
S-12-22

FOR KEY NOTES, SEE SHEET S-12-22

- FINAL DESIGN - FOR AGENCY APPROVAL ONLY

REGISTERED PROFESSIONAL ENGINEER
VINOD M. BADANI
C-041281
EXP. DATE 3/31/17
CIVIL
STATE OF CALIFORNIA

E2 Consulting Engineers, Inc.
1900 Powell Street, Ste. 250
Emeryville, CA 94608
(510) 652-1164

ARCADIS

NO.	DATE	DESCRIPTION	GM/SPEC	DWN	CHKD	SUPV	APVD BY
1	11/18/15	FINAL DESIGN		MD	KJ	VMB	RAO
0	09/08/14	PRE-FINAL (90%) DESIGN		MD	KJ	VMB	VMB

REVISIONS

APPROVED BY	
RAO	SO
	SUPV
	DSGN
	DWN
	CHKD
	OK
	DATE
	SCALES 3/4"=1'-0"

TOPOCK GROUNDWATER REMEDIATION PROJECT
SWITCH GEAR CANOPY SECTIONS AND DETAILS
GAS TRANSMISSION & DISTRIBUTION
PACIFIC GAS AND ELECTRIC COMPANY
SAN FRANCISCO, CALIFORNIA

MICROFILM	
BILL OF MATL	
DWG LIST	
SUPSDS	
SUPSD BY	
SHEET NO.	of SHEETS
S-12-24	REV 0

E2-S-XXX-1203.dwg

N1808

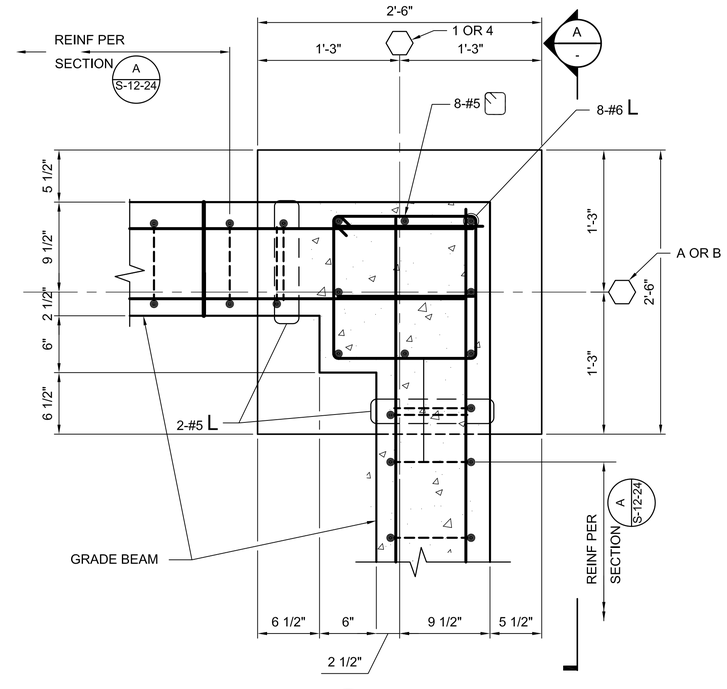

1 DETAIL
1-1/2" = 1'-0"
S-12--22

FOR KEY NOTES, SEE SHEET S-12-22

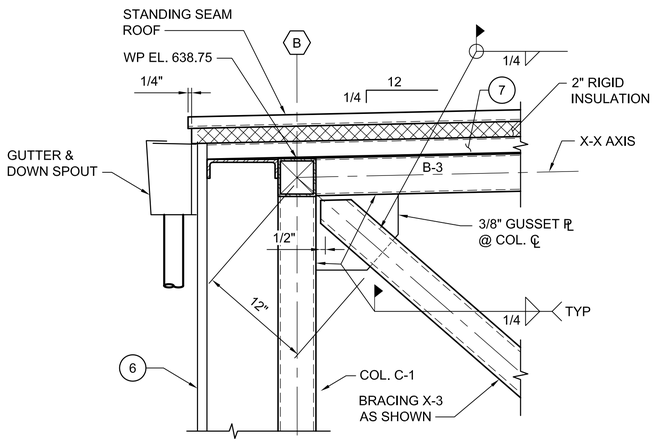

C SECTION
1-1/2" = 1'-0"
S-12-24

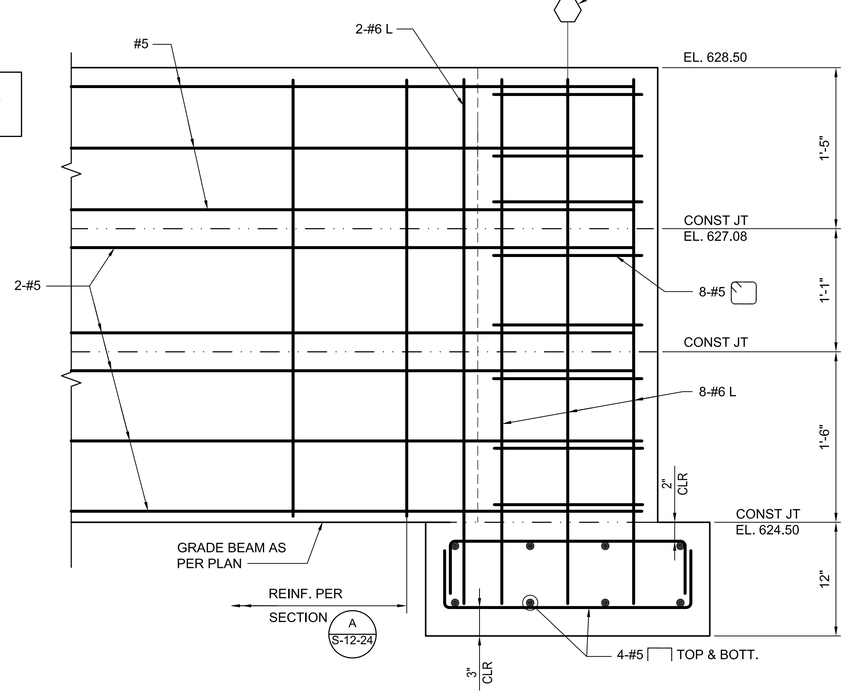

A SECTION
1-1/2" = 1'-0"

- FINAL DESIGN -
FOR AGENCY APPROVAL ONLY

REGISTERED PROFESSIONAL ENGINEER
VINOD M. BADANI
C-041281
EXP. DATE 3/31/17
CIVIL
STATE OF CALIFORNIA

E2 Consulting Engineers, Inc.
1900 Powell Street, Ste. 250
Emeryville, CA 94608
(510) 652-1164

ARCADIS

NO.	DATE	DESCRIPTION	GM/SPEC	DWN	CHKD	SUPV	APVD BY
1	11/18/15	FINAL DESIGN		MD	KJ	VMB	RAO
0	09/08/14	PRE-FINAL (90%) DESIGN		MD	KJ	VMB	VMB

REVISIONS

APPROVED BY	
RAO	SO
	SUPV
	DSGN
	DWN
	CHKD
	OK
	DATE
	SCALES 3/4"=1'-0"

TOPOCK GROUNDWATER REMEDIATION PROJECT
SWITCH GEAR CANOPY
SECTIONS AND DETAILS

GAS TRANSMISSION & DISTRIBUTION
PACIFIC GAS AND ELECTRIC COMPANY
SAN FRANCISCO, CALIFORNIA

MICROFILM	
BILL OF MATL	
DWG LIST	
SUPSDS	
SUPSD BY	
SHEET NO. of SHEETS	
S-12-25	REV 0

E2-S-XXX-1203.dwg

N1808

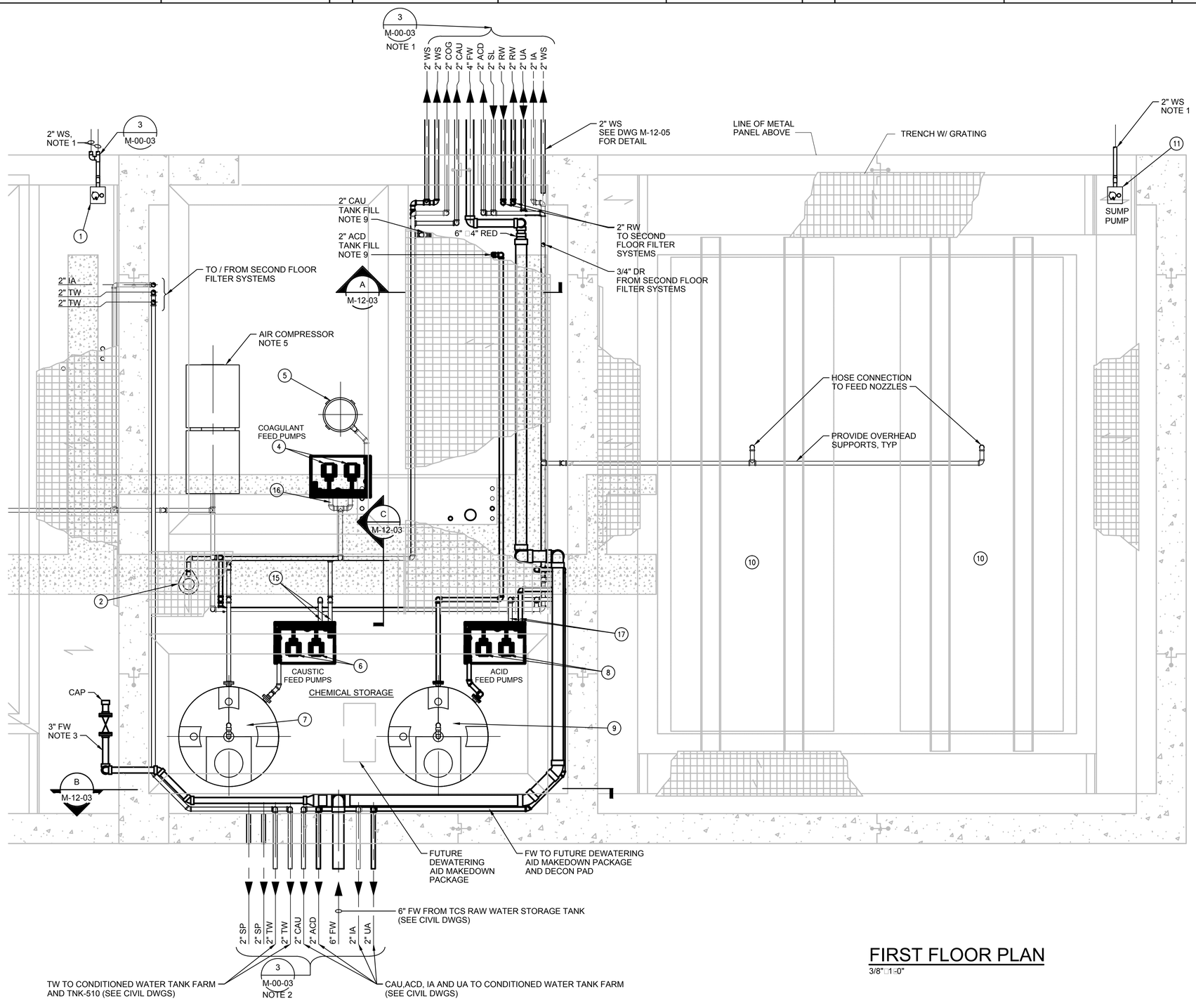

FIRST FLOOR PLAN

3/8"=1'-0"

LEGEND:

(7) REFERENCE ITEM NUMBER IN EQUIPMENT SCHEDULE ON SHEET M-12-03.

NOTES:

1. INVERT ELEVATION IS AT 624.5' MSL.
2. INVERT ELEVATION IS AT 636.0' MSL.
3. INVERT ELEVATION IS AT 629.0' MSL.
4. SEE A-12-02, S-12-02 THRU 12-04 AND C-10-02, C-12-01 FOR MORE DETAIL.
5. AIR COMPRESSOR SYSTEM SEE SPEC 43 12 01B. COMPRESSED AIR PIPING AND FITTINGS SHALL BE VIEGA PROPRESS COPPER PIPE OR APPROVED EQUAL. WALL THICKNESS SHALL BE SUITABLE FOR COMPRESSED AIR AT 110 PSIG AND 130 F AMBIENT (TYPE K OR BETTER).
6. PIPE SUPPORTS NOT SHOWN. CONTRACTOR TO SUPPORT PIPES IN ACCORDANCE WITH SPEC. 40 05 15.
7. LPS-1 AND LPS-2 PROVIDED BY OWNER.
8. PROVIDE TCS TRUCK FILL PUMP PMP-501. INSTALL ON EQUIPMENT PAD PER DETAIL 10 DWG S-00-02 AT DECONTAMINATION PAD. COORDINATE LOCATION WITH STRUCTURAL DRAWINGS AND OBTAIN APPROVAL FROM ENGINEER PRIOR TO FORMING PAD. PMP-501: CENTRIFUGAL PUMP, 150 GPM AT 90' TDH' SELF-PRIMING AMT/GORMAN RUPP 2876-95, 3450 RPM, 3" SUCTION, 3" DISCHARGE. PROVIDE 3"DRY DISCONNECT COUPLER SUITABLE FOR BRACKISH WATER (4,000 TO 10,000 PPM TDS).
9. PROVIDE TWO 2" DRY DISCONNECT COUPLERS (NPT BY HOSE) POLYPROPYLENE MATERIAL FOR TRANSFERRING 25% CAUSTIC AND 19% HYDROCHLORIC ACID INTO TANK FILL LINES (TNK-910 AND TNK-930). BY KAMVALOK OR EQUAL.
10. FOR PIPE ID AND ABBREVIATION SCHEDULE, SEE C-00-12.

SCALE: 3/8"=1'

- FINAL DESIGN - FOR AGENCY APPROVAL ONLY

REGISTERED PROFESSIONAL ENGINEER BENJAMIN J. WUERL C 67811 Exp 6/30/17 STATE OF CALIFORNIA

ETIC ENGINEERING

ARCADIS

NO.	DATE	DESCRIPTION	GM/SPEC	DWN	CHKD	SUPV	APVD BY
2	11/18/15	FINAL DESIGN		AJW	KLD	BW	RAO
1	9/8/14	PRE-FINAL (90%) DESIGN		GJ	WF	JP	CH
0	4/5/13	INTERMEDIATE (60%) DESIGN		-	BB	JP	-

REVISIONS

APPROVED BY: RAO

SO | SUPV | DSGN | DWN | CHKD | OK | DATE | SCALES

TOPOCK GROUNDWATER REMEDIATION PROJECT

REMEDY-PRODUCED WATER CONDITIONING PLANT FIRST FLOOR PLAN

GAS TRANSMISSION & DISTRIBUTION

PACIFIC GAS AND ELECTRIC COMPANY SAN FRANCISCO, CALIFORNIA

MICROFILM

BILL OF MATL

DWG LIST

SUPSDS

SUPSD BY

SHEET NO. M-12-01 of SHEETS

REV 2

N1808

11/02/2015, 11:23, G:\Graphics\AR\TOPOCK-01\Submittal_100%\DWGs\M-Mechanical\M-12-01.dwg, Tab: M-12-01

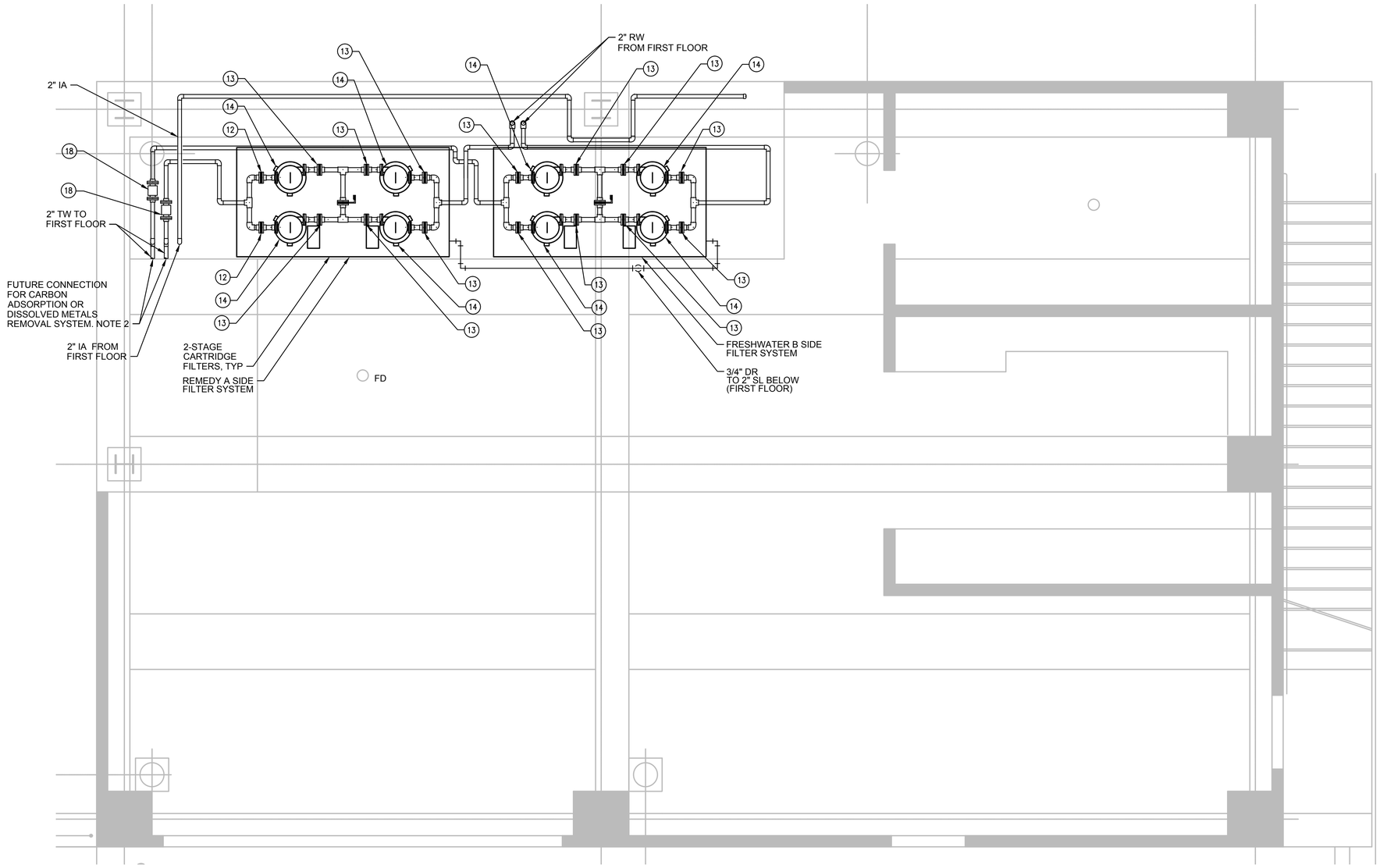

LEGEND:

(7) REFERENCE ITEM NUMBER IN EQUIPMENT SCHEDULE ON SHEET M-12-03.

NOTES:

1. SEE DRAWINGS A-12-02 AND A-12-07 AND S-12-03 FOR BUILDING DETAILS.
2. DISSOLVED METALS REMOVAL SYSTEM APPLIES TO REMEDY A SIDE ONLY.
3. PIPE SUPPORTS NOT SHOWN. CONTRACTOR TO SUPPORT PIPES IN ACCORDANCE WITH SPEC. 40 05 15.
4. RW, TW, IA, AND DR FLOOR PENETRATIONS PER DETAIL4 ON M-00-03. FLOOR DRAIN (FD) SHOWN ON PLUMBING/BUILDING MECHANICAL DWGS.
5. ROUTE RW, TW AND DR PIPING TO CONNECTIONS ON FILTER SKIDS (CONNECTIONS SHOWN ON APPROVED SHOP DRAWINGS).
6. ROUTE INSTRUMENT AIR TO PORT ON FILTER SKIDS (SHOWN ON APPROVED SHOP DRAWINGS). ALL COMPRESSED AIR PIPING AND FITTINGS SHALL BE VIEGA PRO PRESS COPPER PIPE OR APPROVED EQUAL. WALL THICKNESS SHALL BE SUITABLE FOR COMPRESSED AIR AT 110 PSIG AND 130 F AMBIENT (TYPE K OR BETTER).
7. FOR PIPE ID AND ABBREVIATION SCHEDULE, SEE C-00-12.

SECOND FLOOR PLAN

3/8"□1-0"

N

0 1 2 3

SCALE: 3/8"□1□

- FINAL DESIGN - FOR AGENCY APPROVAL ONLY

REGISTERED PROFESSIONAL ENGINEER BENJAMIN J. WUERL C 67811 Exp 6/30/17 STATE OF CALIFORNIA

ETIC ENGINEERING

ARCADIS

NO.	DATE	DESCRIPTION	GM/SPEC	DWN	CHKD	SUPV	APVD	BY
2	11/18/15	FINAL DESIGN		AJW	KLD	BW	RAO	
1	09/08/14	PRE-FINAL (90%) DESIGN		LW	WF	JP	CH	
0	04/13	INTERMEDIATE (60%) DESIGN		GJ	BB	JP	CH	

REVISIONS

APPROVED BY	
RAO	SO
	SUPV
	DSGN
	DWN
	CHKD
	OK
	DATE
	SCALES

TOPOCK GROUNDWATER REMEDIATION PROJECT

REMEDY - PRODUCED WATER CONDITIONING PLANT SECOND FLOOR PLAN

GAS TRANSMISSION & DISTRIBUTION

PACIFIC GAS AND ELECTRIC COMPANY

SAN FRANCISCO, CALIFORNIA

MICROFILM	
BILL OF MATL	
DWG LIST	
SUPSDS	
SUPSD BY	
SHEET NO. of SHEETS	
M-12-02	REV 2

N1808

11/02/2015, 11:29, G:\Graphics\AR\TOPOCK-01\Submittal_100%\D[WGs\M-Mechanical\M-12-02.dwg, Tab: M-12-02

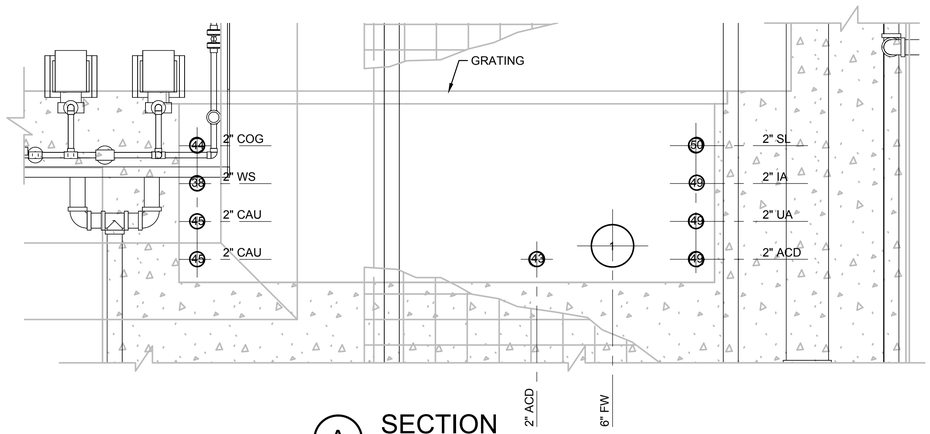

A SECTION
1"□1-0"
M-12-01

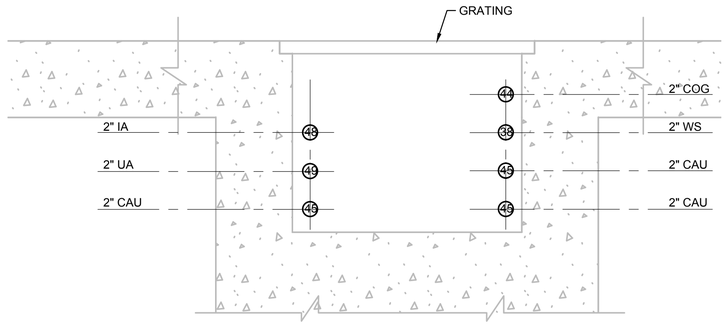

C SECTION
1"□1-0"
M-12-01

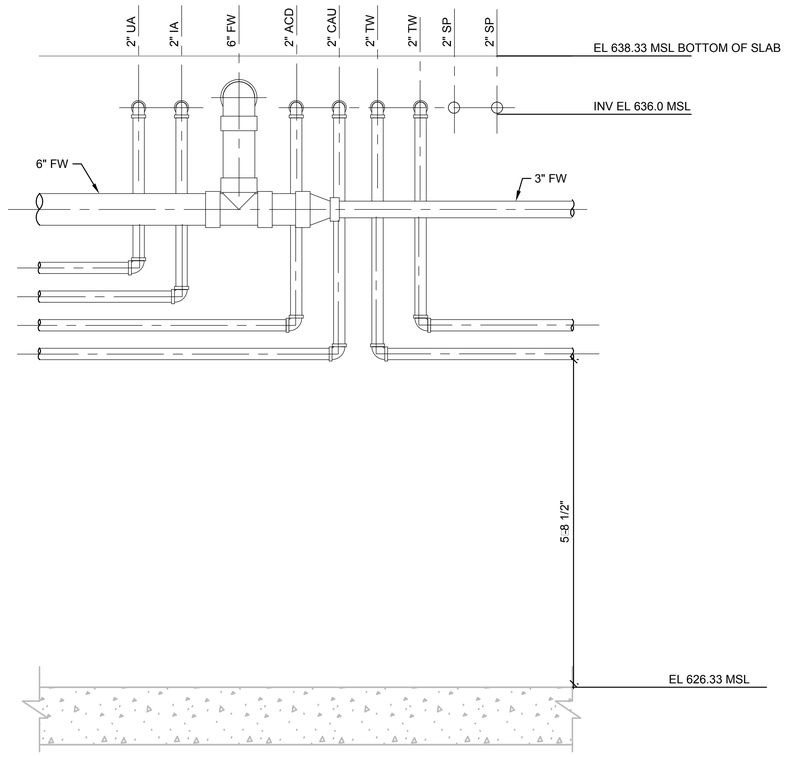

B SECTION
3/4"□1-0"
M-12-01

NOTES:
1. FOR PIPE ID AND ABBREVIATION SCHEDULE, SEE C-00-12.

EQUIPMENT SCHEDULE

ITEM	PIPE SIZE	MATERIAL	PROCESS FLOW	PIPE ID	DESCRIPTION	ID TAG
1	2"	CS	WASTE STREAM	38	DECON PAD SUMP PUMP	PMP-*1407
2	2"	CS	WASTE STREAM	38	REMEDY PRODUCED WATER CONDITIONING PLANT SUMP PUMP	PMP-*1207
3			COMPRESSED AIR		AIR COMPRESSOR	CMP-*1201
4	2"	CS	COAGULANT	44	COAGULANT FEED PUMP	PMP-*1221 PMP-*1222
5		HDPE	COAGULANT	44	COAGULANT STORAGE TANK	TNK-*1220
6	2"	CS	CAUSTIC	45	CAUSTIC FEED PUMP	PMP-*1211 PMP-*1212
7		HDPE	CAUSTIC	45	CAUSTIC STORAGE TANK	TNK-*1212
8	2"	CS	ACID	43	ACID FEED PUMP	PMP-*1231 PMP-*1232
9		HDPE	ACID	43	ACID STORAGE TANK	TNK-*1230
10		CS	SLURRY	50	LIQUID PHASE SEPARATOR	LPS-*1211 LPS-*1212
11		CS	WASTE STREAM	38	LIQUID PHASE SEPARATOR SUMP PUMP	PMP-*1208
12	3"	CPVC	TREATED WATER	16	BALL VALVE	FV-*1212C FV-*1222C FV-*1232C FV-*1242C
13	2"	CPVC	REMEDY WASTEWATER	15	BALL VALVE	FV-*1212A FV-*1222A FV-*1211A FV-*1211C FV-*1221A FV-*1221C FV-*1232A FV-*1242A FV-*1231C FV-*1223A FV-*1241A FV-*1241C
14			REMEDY WASTEWATER	15	FILTER	FIL-*1211 FIL-*1212 FIL-*1221 FIL-*1222 FIL-*1231 FIL-*1232 FIL-*1241 FIL-*1242
15	2"	PVC	CAUSTIC	45	PRESSURE GAUGE	PI-*1267 PI-*1269
16	2"	PVC	COAGULANT	44	PRESSURE GAUGE	PI-*1271
17	2"	PVC	ACID	43	PRESSURE GAUGE	PI-*1272 PI-*1265
18	2"	Teflon	TREATED WATER	16	MAGNETIC FLOW METER	FE-*1271 FE-*1272

- FINAL DESIGN - FOR AGENCY APPROVAL ONLY

REGISTERED PROFESSIONAL ENGINEER BENJAMIN J. WUERL C 67811 EXP 6/30/17 STATE OF CALIFORNIA

ETIC ENGINEERING

ARCADIS

NO.	DATE	DESCRIPTION	GM/SPEC	DWN	CHKD	SUPV	APVD BY
1	11/18/15	FINAL DESIGN	AJW	KLD	BW	RAO	
0	9/8/14	PRE-FINAL (90%) DESIGN	DC	WF	JP	CH	

REVISIONS

APPROVED BY	
RAO	SO
	SUPV
	DSGN
	DWN
	CHKD
	OK
	DATE
	SCALES

TOPOCK GROUNDWATER REMEDIATION PROJECT

REMEDY - PRODUCED WATER CONDITIONING PLANT SECTIONS

GAS TRANSMISSION & DISTRIBUTION
PACIFIC GAS AND ELECTRIC COMPANY
SAN FRANCISCO, CALIFORNIA

MICROFILM	
BILL OF MATL	
DWG LIST	
SUPSDS	
SUPSD BY	
SHEET NO.	of SHEETS
M-12-03	REV 1

11/02/2015, 11:30, G:\Graphics\ART\TOPOCK-01\Submittal_100%\DWGs\M-Mechanical\M-12-03.dwg, Tab: M-12-03

N1808

DRAWING NOTES:

1. SIZE REFRIGERANT PIPING AND PROVIDE BRANCH PIPING KITS PER MANUFACTURER'S RECOMMENDATIONS.
2. PROVIDE 6" CONCRETE PAD UNDER EQUIPMENT. EQUIPMENT SHALL BE ANCHORED TO PAD.
3. PROVIDE SLEEVE UNDER STAIRS AND THROUGH INSIDE WALL FOR HEAT PUMP PIPING AND WIRING.
4. PIPING UP TO 2ND FLOOR. REFER TO DRAWING M-12-02 FOR CONTINUATION.

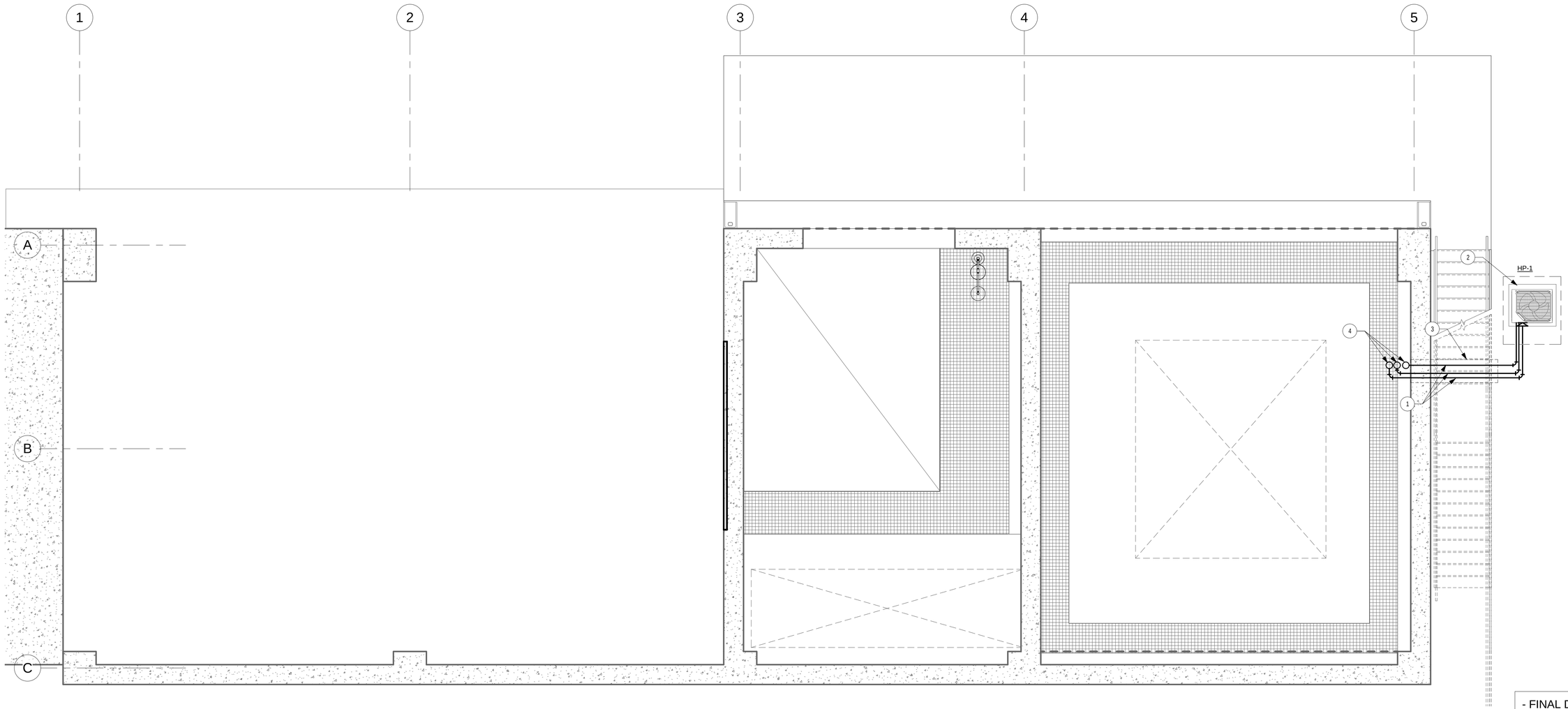

SCALE: 1/4" = 1'-0"
AT: 22"x 34"
0 4' 8' 16'

- FINAL DESIGN -
FOR AGENCY APPROVAL ONLY

REGISTERED PROFESSIONAL ENGINEER
AMARDEEP P. SINGH
No. M-37414
Exp. 06/30/17
MECHANICAL
STATE OF CALIFORNIA
11/4/2015

CALLISONRTKL
A DESIGN CONSULTANCY OF ARCADIS

ARCADIS

NO.	DATE	DESCRIPTION	GM/SPEC	DWN	CHKD	SUPV	APVD BY
1	11/18/2015	FINAL DESIGN		JMH	HS	HS	RAO

REVISIONS

APPROVED BY	SO
	SUPV HS
RAO	DSGN JMH
	DWN JMH
	CHKD HS
	OK
	DATE 11/18/2015
	SCALES 1/4" = 1'-0"

TOPOCK GROUNDWATER REMEDIATION PROJECT
WATER CONDITIONING PLANT (BUILDING 12)
MECHANICAL 1ST FLOOR PLAN
GAS TRANSMISSION & DISTRIBUTION
PACIFIC GAS AND ELECTRIC COMPANY
SAN FRANCISCO, CALIFORNIA

MICROFILM	
BILL OF MATL	
DWG LIST	
SUPSDS	
SUPSD BY	
SHEET NO.	of SHEETS
M-12-04	REV 0

Project Number

COPYRIGHT © 2015 CALLISON

N1808

K:\ARC\ADS -Topock\5000 BIM\5050 Revit\5050 Project\TOPOCK-12 MECHANICAL.rvt 11/13/2015 11:22:19 AM

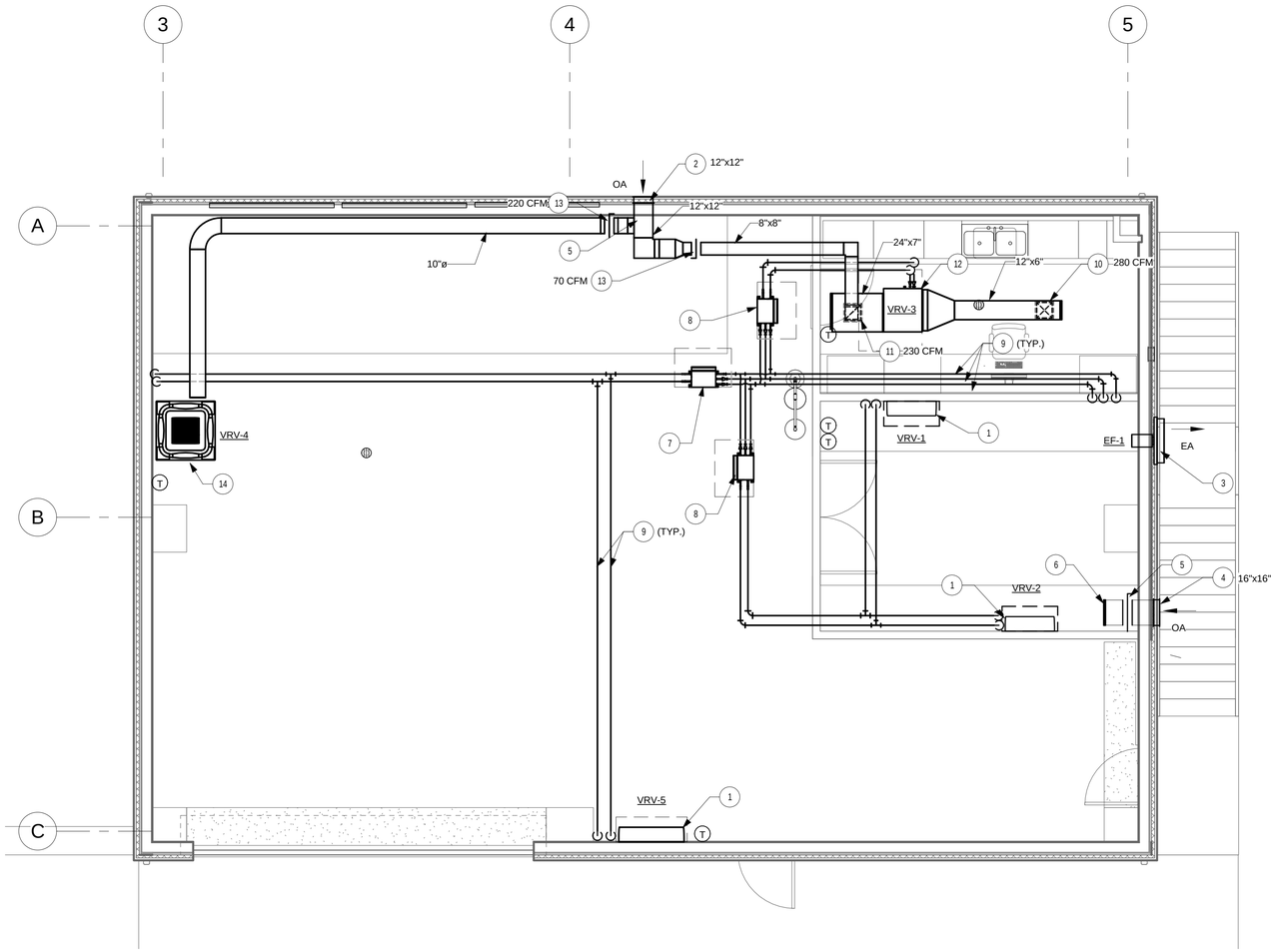

DRAWING NOTES:

1. MOUNT WALL MOUNTED VRV UNIT. MOUNT APPROXIMATELY 8'-0" AFF. COORDINATE FINAL LOCATION WITH ARCHITECT. PROVIDE SEISMIC RESTRAINTS FOR UNIT.
2. OUTSIDE AIR LOUVER OF SIZE INDICATED (MIN. 50% FREE AREA) WITH BIRD SCREEN. REFER TO ARCHITECTURAL DIVISION FOR ADDITIONAL INFORMATION. MOUNT 12'-10" AFF.
3. SIDEWALL PROP FAN MOUNTED IN WALL AT 7'-6" AFF.
4. OUTSIDE AIR LOUVER OF SIZE INDICATED (MIN. 50% FREE AREA) WITH BIRD SCREEN. REFER TO ARCHITECTURAL DIVISION FOR ADDITIONAL INFORMATION. MOUNT 8'-0" AFF.
5. GRAVITY BACKDRAFT DAMPER.
6. OPEN ENDED DUCT WITH INSECT SCREEN (MIN. 50% FREE AREA).
7. PROVIDE BRACH SELECTOR BOX (DAIKIN BSQ60TVJ), RATED FOR 230V/1PH, 0.1 MCA.
8. PROVIDE BRACH SELECTOR BOX (DAIKIN BSQ36TVJ), RATED FOR 230V/1PH, 0.1 MCA.
9. SIZE REFRIGERANT PIPING AND PROVIDE BRANCH PIPING KITS PER MANUFACTURER'S RECOMENDATIONS.
10. PROVIDE SURFACE MOUNTED, 10"x10" TITUS 300RL SUPPLY GRILLE, OR APPROVED EQUAL, WITH OPPOSED BLADE DAMPER. BALANCE TO INDICATED AIRFLOW.
11. PROVIDE SURFACE MOUNTED, 10"x10" TITUS 350RL RETURN GRILLE, OR APPROVED EQUAL, WITH OPPOSED BLADE DAMPER. BALANCE TO INDICATED AIRFLOW.
12. PROVIDE ACCESS PANEL IN HARD CEILING FOR DUCTED VRV UNIT. SIZE AND LOCATED PER MANUFACTURER'S RECOMMENDATIONS.
13. BALANCE TO INDICATED AIRFLOW.
14. CEILING HUNG VRV UNIT APPROXIMATELY 8'-0" AFF. COORDINATE FINAL LOCATION WITH ARCHITECT. PROVIDE SEISMIC RESTRAINTS FOR UNIT.

SCALE: 1/4" = 1'-0"
AT: 22"x 34"
0 4" 8" 16"

- FINAL DESIGN - FOR AGENCY APPROVAL ONLY

REGISTERED PROFESSIONAL ENGINEER
SARGEE P. SINGH
No. M-37414
Exp. 06/30/17
MECHANICAL
STATE OF CALIFORNIA
11/11/2015

CALLISONRTKL A DESIGN CONSULTANCY OF ARCADIS
ARCADIS

NO.	DATE	DESCRIPTION	GM/SPEC	DWN	CHKD	SUPV	APVD BY
1	11/18/2015	FINAL DESIGN		JMH	HS	HS	RAO

REVISIONS

APPROVED BY	
RAO	
SO	
SUPV	HS
DSGN	JMH
DWN	JMH
CHKD	HS
OK	
DATE	11/18/2015
SCALES	1/4" = 1'-0"

TOPOCK GROUNDWATER REMEDIATION PROJECT
WATER CONDITIONING PLANT (BUILDING 12)
MECHANICAL 2ND FLOOR PLAN
GAS TRANSMISSION & DISTRIBUTION
PACIFIC GAS AND ELECTRIC COMPANY
SAN FRANCISCO, CALIFORNIA

MICROFILM	
BILL OF MATL	
DWG LIST	
SUPSDS	
SUPSD BY	
SHEET NO.	of SHEETS
M-12-05	REV 0

Project Number

COPYRIGHT © 2015 CALLISON

N1808

K:\ARCADIS Topock\5000 BIM\5060 Rev#5060 Project\TOPOCK-12 MECHANICAL.rvt 11/13/2015 11:22:38 AM

FAN SCHEDULE

DESIG	LOCATION	SYSTEM	CFM	SP (IN WG)	MOTOR INFORMATION			OPERATING WEIGHT (LBS)	BASIS OF DESIGN		REMARKS
					HP	RPM	VOLTS/PHASE/HZ		MANUFACTURER	MODEL NUMBER	
EF-1	MCC 203	EXHAUST	200	0.071	1/80	1350	115V/1ø/60	12	GREENHECK	SE1-8-424-G	① ②

① PROVIDE GRAVITY BACKDRAFT DAMPER, INSECT SCREEN, PROTECTIVE MOTOR GUARD, AND WEATHER HOOD.
② PROVIDE DISCONNECT.

VRV UNIT SCHEDULE

DESIG.	TYPE	AREA SERVED	AIR FLOW CFM	ESP (IN. W.G.)	COOLING		HTG MBH	ELECTRICAL			WEIGHT (LB)	REFRIG.	DIMEN. HxWxD (IN.)	REMARKS
					TOT. MBH	SENS. MBH		INPUT POWER (KW)	MCA	V-ø-HZ				
VRV-1	WALL MTD	MCC 203	290	-	10.3	7.6	13.5	0.04	0.4	240-1-60	26	R-410A	11x31x9	① ② ③ ④
VRV-2	WALL MTD	MCC 203	290	-	10.3	7.6	13.5	0.04	0.4	240-1-60	26	R-410A	11x31x9	① ② ③ ④
VRV-3	DUCTED	OFFICE 202	280	0.12	10.3	7.3	13.5	0.1	0.9	240-1-60	49	R-410A	8x28x25	② ③ ④ ⑤
VRV-4	CASSETTE	WATER CONDITIONING 201	777	-	20.6	16.8	27.0	0.06	0.7	240-1-60	51	R-410A	9.7x33x33	② ③ ④ ⑦
VRV-5	WALL MTD	WATER CONDITIONING 201	635	-	20.6	15.0	26.5	0.06	0.6	240-1-60	31	R-410A	11x41x9	② ③ ④ ⑥

① BASIS OF DESIGN DAIKIN FXAQ12PVJU.
② COOLING CAPACITY BASED ON NOMINAL INDOOR CONDITIONS OF 80/67 (°F DB/WB) AND AMBIENT CONDITIONS OF 95/75 (°F DB/WB).
③ PROVIDE DISCONNECT, WALL MOUNTED THERMOSTAT
④ HEATING CAPACITY BASED ON NOMINAL INDOOR CONDITIONS OF 70/70 (°F DB/WB) AND AMBIENT CONDITIONS OF 47/43 (°F DB/WB).
⑤ BASIS OF DESIGN DAIKIN FXDQ12MVJU.
⑥ BASIS OF DESIGN DAIKIN FXAQ24PVJU.
⑦ BASIS OF DESIGN DAIKIN FXFQ24TVJU.

HEAT PUMP SCHEDULE

MARK	LOCATION	CAPACITY		REFRIG TYPE	COMPRESSOR		GENERAL					FAN		PHYSICAL		ELECTRICAL					REFRIG. PIPING			BASIS OF DESIGN	REMARKS
		COOLING (MBH)	HEATING (MBH)		TYPE	QTY (#)	SERVICE	CLG EER	CLG SEER	HTG COP	HSPF	AIRFLOW (CFM)	QTY	HxWxD (IN.)	WEIGHT (LB)	INPUT POWER (KW)	MCA	VOLTS (V)	PHASE (ϕ)	HERTZ (Hz)	MAX. EQUIVALENT PIPE LENGTH (FT.)	MAX. VERT. PIPE LENGTH (FT.)	CHARGE (LB/FT)		
HP-1	OUTSIDE	56.2	85.4	R-410	INVERTER	1	VRV-1,2,3,4,5	15.8	14	4.3	8.2	5544	1	67x37x30	527	5.9	15.2	480	3	60	540	295	21.8	DAIKIN REYQ72TYDN	① ② ③

① COOLING OPERATING RANGE = 23-122°F.
② HEATING OPERATING RANGE = -4-60 °F.
③ COOLING CAPACITY RATED AT 115°F.

- FINAL DESIGN - FOR AGENCY APPROVAL ONLY

REGISTERED PROFESSIONAL ENGINEER MARGREE P. SINGH No. M-37414 Exp. 06/30/17 MECHANICAL STATE OF CALIFORNIA
11/13/2015

CALLISONRTKL A DESIGN CONSULTANCY OF ARCADIS

ARCADIS

NO.	DATE	DESCRIPTION	GM/SPEC	DWN	CHKD	SUPV	APVD BY
1	11/18/2015	FINAL DESIGN		JMH	HS	HS	RAO

REVISIONS

APPROVED BY	
RAO	
SO	
SUPV	HS
DSGN	JMH
DWN	JMH
CHKD	HS
OK	
DATE	11/18/2015
SCALES	12" = 1'-0"

TOPOCK GROUNDWATER REMEDIATION PROJECT
WATER CONDITIONING PLANT (BUILDING 12)
MECH SCHEDULES
GAS TRANSMISSION & DISTRIBUTION
PACIFIC GAS AND ELECTRIC COMPANY
SAN FRANCISCO, CALIFORNIA

MICROFILM
BILL OF MATL
DWG LIST
SUPSDS
SUPSD BY
SHEET NO. M-12-06 of SHEETS
REV 0

N1808
Project Number
COPYRIGHT © 2015 CALLISON
K:\ARCADIS Topock\5000 BIM\5060 Rev\5068 Project\TOPOCK-12 MECHANICAL.rvt
11/13/2015 11:22:47 AM

Project Name:	Building 12	NRCC-PRF-01-E	Page 1 of 15
Project Address:	Needles 92363	Calculation Date/Time:	16:46, Wed, Nov 11, 2015
Compliance Scope:	NewMechanical	Input File Name:	Building 12-new.cibd

A. PROJECT GENERAL INFORMATION

1.	Project Location (city)	Needles	7.	# of dwelling units	0
2.	CA Zip Code	92363	8.	Standards Version	Compliance2015
3.	Climate Zone	15	9.	Compliance Software (version)	CBECC-Com 2013-3c (760)
4.	Total Conditioned Floor Area	1,872 ft^2	10.	Building Orientation (deg)	(N) 0 deg
5.	Total Unconditioned Floor Area	0 ft^2	11.	Permitted Scope of Work	NewMechanical
6.	# of Stories (Habitable Above Grade)	1	12	Building Type(s)	Nonresidential

B. COMPLIANCE RESULTS FOR PERFORMANCE COMPONENTS **§ 140.1**

BUILDING COMPLIES

1. Energy Component	2. Standard Design (TDV)	3. Proposed Design (TDV)	4. Compliance Margin (TDV)	5. Percent Better than Standard
Space Heating	6.0	7.0	-1.0	-16.7%
Space Cooling	170.7	81.8	88.9	52.1%
Indoor Fans	130.4	2.0	128.4	98.5%
Heat Rejection	--	--	--	--
Pumps & Misc.	--	--	--	--
Domestic Hot Water	--	--	--	--
Indoor Lighting	36.3	36.3	--	0.0%
COMPLIANCE TOTAL	**343.4**	**127.1**	**216.3**	**63.0%**
Receptacle	43.8	43.8		0.0%
Process	8.1	8.1		0.0%
Process Ltg	--	--		--
TOTAL	**395.3**	**179.0**		**54.7%**

Project Name:	Building 12	NRCC-PRF-01-E	Page 2 of 15
Project Address:	Needles 92363	Calculation Date/Time:	16:46, Wed, Nov 11, 2015
Compliance Scope:	NewMechanical	Input File Name:	Building 12-new.cibd

C. PRIORITY PLAN CHECK/ INSPECTION ITEMS (In order of highest to lowest TDV energy savings)

1st	Indoor Fans: Check envelope and mechanical
2nd	Space Cooling: Check envelope and mechanical
3rd	Heat Rejection: Check envelope and mechanical
4th	Pumps & Misc.: Check mechanical
5th	Domestic Hot Water: Check mechanical
6th	Indoor Lighting: Check lighting
7th	Space Heating: Check envelope and mechanical

Compliance Margin By Energy Component (from Table B column 4)

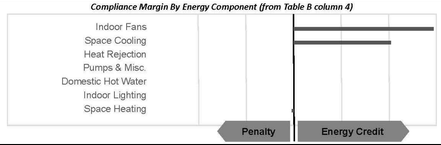

D. EXCEPTIONAL CONDITIONS

The project shows partial compliance, excluding envelope compliance. The building must show either building envelope partial compliance or full new building compliance before operation.

The project shows partial compliance, either envelope only or mechanical only, excluding lighting systems. The building must show partial compliance including lighting or full new building compliance or show prescriptive lighting compliance before operation

The aged solar reflectance and aged thermal emittance must be listed in the Cool Roof Rating Council database of certified products. For projects where initial reflectance is used, the initial reflectance must be listed, and the aged reflectance is calculated by the software program and used in the compliance model.

The proposed building includes spaces without cooling equipment, but cooling equipment has been added to the model, presumably to meet unmet load hour requirements. Verify that the performance parameters of the added equipment are minimally compliant.

The building does not include service water heating. Verify that service water heating is not required and is not included in the design.

E. HERS VERIFICATION

This Section Does Not Apply

F. ADDITIONAL REMARKS

None Provided

Project Name:	Building 12	NRCC-PRF-01-E	Page 3 of 15
Project Address:	Needles 92363	Calculation Date/Time:	16:46, Wed, Nov 11, 2015
Compliance Scope:	NewMechanical	Input File Name:	Building 12-new.cibd

G. COMPLIANCE PATH & CERTIFICATE OF COMPLIANCE SUMMARY

Identify which building components use the performance or prescriptive path for compliance. "NA"= not in project

For components that utilize the performance path, indicate the sheet number that includes mandatory notes on plans.

Building Component	Compliance Path		Compliance Forms *(required for submittal)*	Location of Mandatory Notes on Plans
Envelope	☒	Performance	NRCC-PRF-ENV-DETAILS (section of the NRCC-PRF-01-E)	
	☐	Prescriptive	NRCC-ENV-01 / 02 / 03 / 04 / 05 / 06-E	
	☐	NA		
Mechanical	☒	Performance	NRCC-PRF-MCH-DETAILS (section of the NRCC-PRF-01-E)	
	☐	Prescriptive	NRCC-MCH-01 / 02 / 03 / 04 / 05 / 06 / 07-E	
	☐	NA		
Domestic Hot Water	☒	Performance	NRCC-PRF-PLB-DETAILS (section of the NRCC-PRF-01-E)	
	☐	Prescriptive	NRCC-PLB-01-E	
	☐	NA		
Lighting (Indoor Conditioned)	☒	Performance	NRCC-PRF-LTI-DETAILS (section of the NRCC-PRF-01-E)	
	☐	Prescriptive	NRCC-LTI-01 / 02 / 03 / 04 / 05-E	
	☐	NA		
Covered Process: Commercial Kitchens	☐	Performance	S2 (section of the NRCC-PRF-01-E)	
	☐	Prescriptive	NRCC-PRC-01/ 03-E	
	☒	NA		
Covered Process: Computer Rooms	☐	Performance	S3 (section of the NRCC-PRF-01-E)	
	☐	Prescriptive	NRCC-PRC-01/ 04-E	
	☒	NA		
Covered Process: Laboratory Exhaust	☐	Performance	S4 (section of the NRCC-PRF-01-E)	
	☐	Prescriptive	NRCC-PRC-01/ 09-E	
	☒	NA		

Project Name:	Building 12	NRCC-PRF-01-E	Page 4 of 15
Project Address:	Needles 92363	Calculation Date/Time:	16:46, Wed, Nov 11, 2015
Compliance Scope:	NewMechanical	Input File Name:	Building 12-new.cibd

G. COMPLIANCE PATH & CERTIFICATE OF COMPLIANCE SUMMARY

The following building components are only eligible for prescriptive compliance. Indicate which are relevant to the project.				*The following building components may have mandatory requirements per Part 6. Indicate which are relevant to the project.*			
Yes	**NA**	**Prescriptive Requirement**	**Compliance Forms**	**Yes**	**NA**	**Mandatory Requirement**	**Compliance Forms**
☐	☒	Lighting (Indoor Unconditioned) §140.6	NRCC-LTI-01 / 02 / 03 / 04 / 05-E	☐ ☐	☒ ☒	Commissioning: §120.8 Simple Systems Complex Systems	NRCC-CXR-01 / 02 / 03 / 05-E NRCC-CXR-01 / 02 / 04 / 05-E
☐	☒	Lighting (Outdoor) §140.7	NRCC-LTO-01 / 02 / 03-E	☐	☒	Electrical: §130.5	NRCC-ELC-01-E
☐	☒	Lighting (Sign) §140.8	NRCC-LTS-01-E	☐	☒	Solar Ready: §110.10	NRCC-SRA-01 / 02-E
☐	☒	Solar Thermal Water Heating: §140.5	NRCC-STH-01-E	☐ ☐ ☐ ☐ ☐	☒ ☒ ☒ ☒ ☒	Covered Process: §120.6 Parking Garage Commercial Refrigeration Warehouse Refrigeration Compressed Air Process Boilers	NRCC-PRC-01-E NRCC-PRC-02-E NRCC-PRC-05-E NRCC-PRC-06/07/08-E NRCC-PRC-10-E NRCC-PRC-11-E

- FINAL DESIGN - FOR AGENCY APPROVAL ONLY

REGISTERED PROFESSIONAL ENGINEER MARIDEE P. SHIGEMOTO No. M-37414 Exp. 06/30/17 MECHANICAL STATE OF CALIFORNIA 11/11/2015

CALLISONRTKL A DESIGN CONSULTANCY OF ARCADIS

ARCADIS

NO.	DATE	DESCRIPTION	GM/SPEC	DWN	CHKD	SUPV	APVD BY
1	11/18/2015	FINAL DESIGN		JMH	HS	HS	RAO

REVISIONS

APPROVED BY	SO
	SUPV HS
RAO	DSGN Author
	DWN Author
	CHKD Checker
	OK
	DATE 11/11/15
	SCALES 12" = 1'-0"

TOPOCK GROUNDWATER REMEDIATION PROJECT
WATER CONDITIONING PLANT (BUILDING 12)
MECHANICAL T24 FORMS
GAS TRANSMISSION & DISTRIBUTION
PACIFIC GAS AND ELECTRIC COMPANY
SAN FRANCISCO, CALIFORNIA

MICROFILM	
BILL OF MATL	
DWG LIST	
SUPSDS	
SUPSD BY	
SHEET NO.	of SHEETS
M-12-07	REV 0

N1808

Project Number

COPYRIGHT © 2015 CALLISON

11/13/2015 11:22:52 AM K:\ARCADIS -Topock\5000 BIM\5060 Revit\5065 Project\TOPOCK-12 MECHANICAL.rvt

H. CERTIFICATE OF INSTALLATION, CERTIFICATE OF ACCEPTANCE & CERTIFICATE OF VERIFICATION SUMMARY (NRCI/NRCA/NRCV) – Documentation Author to indicate which Certificates must be submitted for the features to be recognized for compliance (Retain copies and verify forms are completed and signed to post in field for Field Inspector to verify). See Tables G. and H. in MCH and LTI Details Sections for Acceptance Tests and forms by equipment.		**Confirmed**	
Building Component	**Compliance Forms *(required for submittal)***	**Pass**	**Fail**
Envelope	☐ NRCI-ENV-01-E - For all buildings	☐	☐
	☐ NRCA-ENV-02-F- NFRC label verification for fenestration	☐	☐
Mechanical	☐ NRCI-MCH-01-E - For all buildings with Mechanical Systems	☐	☐
	☐ NRCA-MCH-02-A- Outdoor Air	☐	☐
	☐ NRCA-MCH-03-A – Constant Volume Single Zone HVAC	☐	☐
	☐ NRCA-MCH-04-H- Air Distribution Duct Leakage	☐	☐
	☐ NRCA-MCH-05-A- Air Economizer Controls	☐	☐
	☐ NRCA-MCH-06-A- Demand Control Ventilation	☐	☐
	☐ NRCA-MCH-07-A – Supply Fan Variable Flow Controls	☐	☐
	☐ NRCA-MCH-08-A- Valve Leakage Test	☐	☐
	☐ NRCA-MCH-09-A – Supply Water Temp Reset Controls	☐	☐
	☐ NRCA-MCH-10-A- Hydronic System Variable Flow Controls	☐	☐
	☐ NRCA-MCH-11-A – Auto Demand Shed Controls	☐	☐
	☐ NRCA-MCH-12-A- Packaged Direct Expansion Units	☐	☐
	☐ NRCA-MCH-13-A- Air Handling Units and Zone Terminal Units	☐	☐
	☐ NRCA-MCH-14-A- Distributed Energy Storage	☐	☐
	☐ NRCA-MCH-15-A – Thermal Energy Storage	☐	☐
	☐ NRCA-MCH-16-A- Supply Air Temp Reset Controls	☐	☐
	☐ NRCA-MCH-17-A – Condensate Water Temp Reset Controls	☐	☐
	☐ NRCA-MCH-18-A- Energy Management Controls Systems	☐	☐
	☐ NRCV-MCH-04-H- Duct Leakage Test	☐	☐

H. CERTIFICATE OF INSTALLATION, CERTIFICATE OF ACCEPTANCE & CERTIFICATE OF VERIFICATION SUMMARY (NRCI/NRCA/NRCV) – Documentation Author to indicate which Certificates must be submitted for the features to be recognized for compliance (Retain copies and verify forms are completed and signed to post in field for Field Inspector to verify). See Tables G. and H. in MCH and LTI Details Sections for Acceptance Tests and forms by equipment.		**Confirmed**	
Building Component	**Compliance Forms *(required for submittal)***	**Pass**	**Fail**
Plumbing	☐ NRCI-PLB-01-E - For all buildings with Plumbing Systems	☐	☐
	☐ NRCI-PLB-02-E - required on central systems in high-rise residential, hotel/motel application.	☐	☐
	☐ NRCI-PLB-03-E - Single dwelling unit systems in high-rise residential, hotel/motel application.	☐	☐
	☐ NRCI-PLB-21-E - HERS verified central systems in high-rise residential, hotel/motel application.	☐	☐
	☐ NRCI-PLB-22-E - HERS verified single dwelling unit systems in high-rise residential, hotel/motel application.	☐	☐
	☐ NRCV-PLB-21-H- HERS verified central systems in high-rise residential, hotel/motel application.	☐	☐
	☐ NRCV-PLB-22-H - HERS verified single dwelling unit systems in high-rise residential, hotel/motel application.	☐	☐
	☐ NRCI-STH-01-E - Any solar water heating	☐	☐
Indoor Lighting	☐ NRCI-LTI-01-E - For all buildings	☐	☐
	☐ NRCI-LTI-02-E - Lighting control system, or for an Energy Management Control System (EMCS)	☐	☐
	☐ NRCI-LTI-03-E - Line-voltage track lighting integral current limiter, or for a supplementary overcurrent protection panel used to energize only line-voltage track lighting	☐	☐
	☐ NRCI-LTI-04-E - Two interlocked systems serving an auditorium, a convention center, a conference room, or a theater	☐	☐
	☐ NRCI-LTI-05-E - Lighting Control Credit Power Adjustment Factor (PAF)	☐	☐
	☐ NRCI-LTI-06-E - Additional wattage installed in a video conferencing studio	☐	☐
	☐ NRCA-LTI-02-A - Occupancy sensors and automatic time switch controls.	☐	☐
	☐ NRCA-LTI-03-A - Automatic daylighting controls	☐	☐
	☐ NRCA-LTI-04-A - Demand responsive lighting controls	☐	☐
Outdoor Lighting	☐ NRCI-LTO-01-E – Outdoor Lighting	☐	☐
	☐ NRCI-LTO-02-E- EMCS Lighting Control System	☐	☐
	☐ NRCA-LTO-02-A - Outdoor Lighting Control	☐	☐
Sign Lighting	☐ NRCI-LTS-01-E – Sign Lighting	☐	☐
Electrical	☐ NRCI-ELC-01-E - Electrical Power Distribution	☐	☐
Photovoltaic	☐ NRCI-SPV-01-E Photovoltaic Systems	☐	☐

H. CERTIFICATE OF INSTALLATION, CERTIFICATE OF ACCEPTANCE & CERTIFICATE OF VERIFICATION SUMMARY (NRCI/NRCA/NRCV) – Documentation Author to indicate which Certificates must be submitted for the features to be recognized for compliance (Retain copies and verify forms are completed and signed to post in field for Field Inspector to verify). See Tables G. and H. in MCH and LTI Details Sections for Acceptance Tests and forms by equipment.		**Confirmed**	
Building Component	**Compliance Forms *(required for submittal)***	**Pass**	**Fail**
Covered Process	☐ NRCI-PRC-01-E Refrigerated Warehouse	☐	☐
	☐ NRCA-PRC-01-F- Compressed Air Systems	☐	☐
	☐ NRCA-PRC-02-F- Kitchen Exhaust	☐	☐
	☐ NRCA-PRC-03-F- Garage Exhaust	☐	☐
	☐ NRCA-PRC-04-F- Refrigerated Warehouse- Evaporator Fan Motor Controls	☐	☐
	☐ NRCA-PRC-05-F- Refrigerated Warehouse- Evaporative Condenser Controls	☐	☐
	☐ NRCA-PRC-06-F- Refrigerated Warehouse- Air Cooled Condenser Controls	☐	☐
	☐ NRCA-PRC-07F- Refrigerated Warehouse- Variable Speed Compressor	☐	☐
	☐ NRCA-PRC-08-F- Electrical Resistance Underslab Heating System	☐	☐

I. ENVELOPE GENERAL INFORMATION (See NRCC-PRF-ENV-DETAILS for more information)
This Section Does Not Apply

J. FENESTRATION SUMMARY	**§ 110.6**
This Section Does Not Apply	

K. OPAQUE SURFACE ASSEMBLY SUMMARY	**§ 120.7/ § 140.3**
This Section Does Not Apply	

L. ROOFING PRODUCT SUMMARY	**§ 140.3**
This Section Does Not Apply	

M. HVAC SYSTEM SUMMARY (see NRCC-PRF-MCH-DETAILS for more information) — **§ 110.1 / § 110.2**

Dry System Equipment [1] (Fan & Economizer info included below in Table N) — Confirmed

1. Equip Name	2. Equip Type	3. System Type (Simple [3] or Complex [4])	4. Qty	5. Total Heating Output (kBtu/h)	6. Supp Heat Source (Y/N)	7. Supp Heat Output (kBtu/h)	8. Total Cooling Output (kBtu/h)	9. Efficiency: Cooling	9. Efficiency: Heating	10. Acceptance Testing Required? (Y/N) [5]	11. Status [6]	Confirmed: Pass	Confirmed: Fail
VRV-1&2	SZHP (Packaged3Phase)	Simple	1	27	No	0	21	SEER-13.0	HSPF-8.2	No	N	☐	☐
VRV-3	SZHP (Packaged3Phase)	Simple	1	14	No	0	10	SEER-13.0	HSPF-8.2	No	N	☐	☐
VRV-4&5	SZHP (Packaged3Phase)	Simple	1	53	No	0	41	SEER-13.0	HSPF-8.2	No	N	☐	☐

Wet System Equipment [2] — *Pumps* — Confirmed

12. Equip Name	13. Equip Type	14. Qty	15. Vol (gal)	16. Rated Capacity (kBtu/h)	17. Efficiency	18. Standby Loss	19. Tank Ext. R Value	20. Pumps: Qty	21. Pumps: GPM	22. Pumps: HP	23. Pumps: VSD (Y/N)	24. Status [6]	Confirmed: Pass	Confirmed: Fail

[1] *Dry System Equipment includes furnaces, air handling units, heat pumps, etc.*
[2] *Wet System Equipment includes boilers, chillers, cooling towers, water heaters, etc.*
[3] *Simple Systems must complete tRCC-CXR-03-E commissioning design review form*
[4] *Complex Systems must complete tRCC-CXR-04-E commissioning design review form*
[5] *A summary of which acceptance tests are applicable is provided in tRCC-PRF-MCH-DETAILS*
[6] *Status: N - New, A – Altered, E – Existing*

Discrepancy between modeled and designed equipment sizing? (If "Yes", see Table F. "Additional Remarks" for an explanation)	No

- FINAL DESIGN - FOR AGENCY APPROVAL ONLY

REGISTERED PROFESSIONAL ENGINEER — AMARDEEP P. SINGH — No. M-37414 — Exp. 06/30/17 — MECHANICAL — STATE OF CALIFORNIA — 11/11/2015

CALLISONRTKL A DESIGN CONSULTANCY OF ARCADIS

ARCADIS

NO.	DATE	DESCRIPTION	GM/SPEC	DWN	CHKD	SUPV	APVD BY
1	11/18/2015	FINAL DESIGN	JMH	HS	HS	RAO	

REVISIONS

APPROVED BY	
RAO	

SO	
SUPV	HS
DSGN	Author
DWN	Author
CHKD	Checker
OK	
DATE	11/11/15
SCALES	12" = 1'-0"

TOPOCK GROUNDWATER REMEDIATION PROJECT
WATER CONDITIONING PLANT (BUILDING 12) MECHANICAL T24 FORMS
GAS TRANSMISSION & DISTRIBUTION
PACIFIC GAS AND ELECTRIC COMPANY
SAN FRANCISCO, CALIFORNIA

MICROFILM	
BILL OF MATL	
DWG LIST	
SUPSDS	
SUPSD BY	
SHEET NO.	of SHEETS

M-12-08 — REV 0

Project Number

COPYRIGHT © 2015 CALLISON

N1808

K:\ARCADIS -Topock\5000 BIM\5060 Revit\5095 Project\TOPOCK-12 MECHANICAL.rvt 11/13/2015 11:22:56 AM

N. ECONOMIZER & FAN SYSTEMS SUMMARY[1] — § 140.4 — Confirmed

1.	2.	3.					4.					5.	Pass	Fail
Equip Name	Outside Air	Supply Fan					Return Fan					Economizer Type (if present)		
	CFM	CFM	HP	BHP	TSP (inch WC)	Control	CFM	HP	BHP	TSP (inch WC)	Control			
VRV-1&2	0	580	0.054	0.005	0.03	ConstantVolume	NA	NA	NA	NA	NA		☐	☐
VRV-3	65	280	0.134	0.026	0.30	ConstantVolume	NA	NA	NA	NA	NA	NoEconomizer	☐	☐
VRV-4&5	219	1412	0.080	0.013	0.03	ConstantVolume	NA	NA	NA	NA	NA	NoEconomizer	☐	☐

[1] *Mechanical ventilation calculations and exhaust fans are included in the NRCC-PRF-MCH-DETAILS section*

O. EQUIPMENT CONTROLS — § 120.2 — Confirmed

1. Equip Name	2. Equip Type	3. Controls	Pass	Fail
VRV-1&2	SZHP	No DCV Controls Economizer type not properly specified No Supply Air Temp. Control	☐	☐
VRV-3	SZHP	No DCV Controls No Economizer No Supply Air Temp. Control	☐	☐
VRV-4&5	SZHP	No DCV Controls No Economizer No Supply Air Temp. Control	☐	☐

P. SYSTEM DISTRIBUTION SUMMARY — § 120.4/ § 140.4(i)

This Section Does Not Apply

Does the Project Include Zonal Systems? (if "Yes", see NRCC-PRF-MCH-DETAILS for system information)	No
Does the Project Include a Solar Hot Water System? (if "Yes", see NRCC-PRF-MCH-DETAILS for system information)	No
Multifamily or Hotel/ Motel Occupancy? (if "Yes", see NRCC-PRF-MCH-DETAILS for DHW system information)	No

Q. INDOOR CONDITIONED LIGHTING GENERAL INFO (see NRCC-PRF-LTI-DETAILS for more info)

This Section Does Not Apply

R. INDOOR CONDITIONED LIGHTING SCHEDULE (Adapted from NRCC-LTI-01-E)[1] — § 130.0

This Section Does Not Apply

[1] *If lighting power densities were used in the compliance model Building Departments will need to check prescriptive forms for Luminaire Schedule details.*

S1. COVERED PROCESS SUMMARY – ENCLOSED PARKING GARAGES — § 140.9

This Section Does Not Apply

S2. COVERED PROCESS SUMMARY – COMMERCIAL KITCHENS — § 140.9

This Section Does Not Apply

S3. COVERED PROCESS SUMMARY – COMPUTER ROOMS — § 140.9

This Section Does Not Apply

S4. COVERED PROCESS SUMMARY – LABORATORY EXHAUSTS — § 140.9

This Section Does Not Apply

T. UNMET LOAD HOURS

This Section Does Not Apply

U. ENERGY USE SUMMARY

	Electric (kWh/yr)	Natural Gas (therms/yr)
Total Annual Baseline	26826.7	71.8869
Total Annual Proposed	12111.9	13.3092

DOCUMENTATION AUTHOR'S DECLARATION STATEMENT — § 10-103

I certify that this Certificate of Compliance documentation is accurate and complete.

Documentation Author Name:	Signature:
Company:	
Address:	Signature Date:
City/State/Zip:	CEA Identification (If applicable):
Phone:	

RESPONSIBLE PERSON'S DECLARATION STATEMENT

I certify the following under penalty of perjury, under the laws of the State of California:

1	I hereby affirm that I am eligible under the provisions of Division 3 of the Business and Professions Code to sign this document as the person responsible for its preparation; and that I am licensed in the State of California as a civil engineer, mechanical engineer, electrical engineer, or I am a licensed architect.
2	I affirm that I am eligible under the provisions of Division 3 of the Business and Professions Code by section 5537.2 or 6737.3 to sign this document as the person responsible for its preparation; and that I am a licensed contractor performing this work.
3	I affirm that I am eligible under Division 3 of the Business and Professions Code to sign this document because it pertains to a structure or type of work described as exempt pursuant to Business and Professions Code Sections 5537, 5538 and 6737.1.

Responsible Envelope Designer Name:	**Signature:**	
Company: Callison		
Address:	Date Signed:	
City/State/Zip:	Declaration Statement Type:	
Phone:	Title:	License #:
Responsible Lighting Designer Name:	**Signature:**	
Company:		
Address:	Date Signed:	
City/State/Zip:	Declaration Statement Type:	
Phone:	Title:	License #:
Responsible Mechanical Designer Name: - specify -	**Signature:**	
Company:		
Address:	Date Signed:	
City/State/Zip:	Declaration Statement Type:	
Phone:	Title:	License #:

NRCC-PRF-ENV-DETAILS -SECTION START-

A. OPAQUE SURFACE ASSEMBLY DETAILS

This Section Does Not Apply

B. OVERHANG DETAILS (Adapted from NRCC-ENV-02-E)

This Section Does Not Apply

C. OPAQUE DOOR SUMMARY — Confirmed

1. Opaque Door Assembly Name / Tag or I.D.	2. Door Type	3. Certification Method	4. Operation	5. Overall U-factor	Pass	Fail
DoorConstruction 1	MetalUninsulatedDoubleLayerDoor	DefaultPerformance	Swinging	0.500	☐	☐
RollUPdoor	MetalUninsulatedSingleLayerRollupDoor	DefaultPerformance	NonSwinging	1.450	☐	☐
Uninsulated-Double-Layers	MetalUninsulatedDoubleLayerDoor	DefaultPerformance	NonSwinging	0.500	☐	☐

NRCC-PRF-MCH-DETAILS -SECTION START-

A. MECHANICAL VENTILATION AND REHEAT ***(Adapted from 2013-NRCC-MCH-03-E)*** — Confirmed

	1. DESIGN AIR FLOWS								2. VENTILATION (§ 120.1)										
CONDITIONED ZONE NAME	HEATING / COOLING SYSTEM ID	DESIGN PRIMARY AIR FLOW (CFM)	DESIGN PRIMARY MINIMUM AIR FLOW (CFM)	MINIMUM PRIMARY AIR FLOW FRACTION	MAXIMUM HEATING AIR FLOW (CFM)	MAXIMUM HEATING AIR FLOW FRACTION	DSC CONTROL (Y/N)	VENT SYSTEM ID	CONDITIONED AREA (ft2)	MIN. VENT PER AREA (CFM/ft2)	DESIGN NUM. OF PEOPLE	MIN. VENT PER PERSON (CFM/person)	RECTD VENT AIR FLOW (CFM)	DESIGN VENT AIR FLOW (CFM)	TRANSFER AIRFLOW (CFM)	DCV (Y/N)	Pass	Fail
MCC Thermal Zone	VRV-1&2	580	NA	NA	NA	NA	N	VRV-1&2	224	0.15	1	50.0	34	NA	34	N	☐	☐
Office thermal Zone	VRV-3	280	NA	NA	NA	NA	N	VRV-3	186	0.15	1	30.0	28	65	NA	N	☐	☐

- FINAL DESIGN - FOR AGENCY APPROVAL ONLY

REGISTERED PROFESSIONAL ENGINEER — HARDEEP P. SINGH — No. M-37414 Exp. 06/30/2017 — MECHANICAL — STATE OF CALIFORNIA

11/11/2015

CALLISONRTKL A DESIGN CONSULTANCY OF ARCADIS

ARCADIS

NO.	DATE	DESCRIPTION	GM/SPEC	DWN	CHKD	SUPV	APVD BY
1	11/18/2015	FINAL DESIGN	JMH	HS	HS	RAO	

REVISIONS

APPROVED BY	
RAO	

SO	
SUPV	HS
DSGN	Author
DWN	Author
CHKD	Checker
OK	
DATE	11/11/15
SCALES	12" = 1'-0"

TOPOCK GROUNDWATER REMEDIATION PROJECT
WATER CONDITIONING PLANT (BUILDING 12)
MECHANICAL T24 FORMS
GAS TRANSMISSION & DISTRIBUTION
PACIFIC GAS AND ELECTRIC COMPANY
SAN FRANCISCO, CALIFORNIA

MICROFILM	
BILL OF MATL	
DWG LIST	
SUPSDS	
SUPSD BY	
SHEET NO.	of SHEETS
M-12-09	REV 0

Project Number

COPYRIGHT © 2015 CALLISON

N1808

K:\ARC\AUDS - Topock\6000 BIM\6500 Revit\6500 Project\TOPOCK-12 MECHANICAL.rvt 11/13/2015 11:23:00 AM

Project Name:	Building 12	NRCC-PRF-01-E	Page 13 of 15
Project Address:	Needles 92363	Calculation Date/Time:	16:46, Wed, Nov 11, 2015
Compliance Scope:	NewMechanical	Input File Name:	Building 12-new.cibd

A. MECHANICAL VENTILATION AND REHEAT *(Adapted from 2013-NRCC-MCH-03-E)* — **Confirmed**

1. DESIGN AIR FLOWS								2. VENTILATION (§ 120.1)								Confirmed	
CONDITIONED ZONE NAME	HEATING / COOLING SYSTEM ID	DESIGN PRIMARY AIR FLOW (CFM)	DESIGN PRIMARY MINIMUM AIR FLOW (CFM)	MINIMUM PRIMARY AIR FLOW FRACTION	MAXIMUM HEATING AIR FLOW (CFM)	MAXIMUM HEATING AIR FLOW FRACTION	DDC CONTROL (Y/N)	VENT SYSTEM ID	CONDITIONED AREA (ft2)	MIN. VENT RTE AREA (CFM/ft2)	DESIGN NUM. OF PEOPLE	MIN. VENT RTE PERSON (CFM/person)	REQ'D VENT AIR FLOW (CFM)	DESIGN VENT AIR FLOW (CFM)	TRANSFER AIRFLOW (CFM)	DCV (Y/N)	Pass	Fail
Wtr Cond Rm ThermalZone	VRV-4&5	1,412	NA	NA	NA	NA	N	VRV-4&5	1,463	0.15	3	75.0	219	219	NA	N	☐	☐
								TOTAL	1,873		5		281	284	34		☐	☐

B. ZONAL SYSTEM AND TERMINAL UNIT SUMMARY — **§ 140.4**

1.	2.	3.	4.		5.	6.	7.			8.			Confirmed	
System ID	System Type	Qty	Rated Capacity (kBtuh)		Economizer	Zone Name	Airflow (cfm)			Fan			Pass	Fail
			Heating	Cooling			Design	Min.	Min. Ratio	BHP	Cycles	ECM Motor		
VRV-1 TU	Uncontrolled	1	NA	NA	NA	MCC Thermal Zone	580	NA	NA	NA	NA	☐	☐	☐
VRV-3 TU	Uncontrolled	1	NA	NA	NA	Office thermal Zone	280	NA	NA	NA	NA	☐	☐	☐
VRV-4&5 TU	Uncontrolled	1	NA	NA	NA	Wtr Cond Rm ThermalZone	1412	NA	NA	NA	NA	☐	☐	☐

C. EXHAUST FAN SUMMARY

This Section Does Not Apply

D. DHW EQUIPMENT SUMMARY – *(Adapted from NRCC-PLB-01)*

This Section Does Not Apply

Project Name:	Building 12	NRCC-PRF-01-E	Page 14 of 15
Project Address:	Needles 92363	Calculation Date/Time:	16:46, Wed, Nov 11, 2015
Compliance Scope:	NewMechanical	Input File Name:	Building 12-new.cibd

E. MULTI-FAMILY CENTRAL DHW SYSTEM DETAILS

This Section Does Not Apply

F. SOLAR HOT WATER HEATING SUMMARY (Adapted from NRCC-STH-01)

This Section Does Not Apply

G. MECHANICAL HVAC ACCEPTANCE TESTS & FORMS *(Adapted from 2013-NRCC-MCH-01-E)* — **§ RA4**

Declaration of Required Acceptance Certificates (NRCA) – Acceptance Certificates that may be submitted. (Retain copies and verify forms are completed and signed to post in field for Field Inspector to verify).

Test Description		MCH-02A	MCH-03A	MCH-04A	MCH-05A	MCH-06A	MCH-07A	MCH-08A	MCH-09A	MCH-10A	MCH-11A	MCH-12A	MCH-13A	MCH-14A	MCH-15A	MCH-16A	MCH-17A	MCH-18A	Confirmed	
Equipment Requiring Testing or Verification	# of units	Outdoor Air	Single Zone Unitary	Air Dist. Ducts	Economizer Controls	DCV	Supply Fan VAV	Valve leakage	Supply Water Temp. Reset	Hyd. Variable Flow Control	Auto Demand Shed Control	FDD for DX Units	Auto FDD for Air & Zone	Dist. Energy Storage DX AC	TES Systems	Supply Air Temp. Reset	Condenser Water Reset Controls	ECMS	Pass	Fail
VRV-1&2	1	--	--	--	--	--	--	--	--	--	--	--	--	--	--	--	--	--	☐	☐
VRV-3	1	--	--	--	--	--	--	--	--	--	--	--	--	--	--	--	--	--	☐	☐
VRV-4&5	1	--	--	--	--	--	--	--	--	--	--	--	--	--	--	--	--	--	☐	☐

NRCC-PRF-LTI-DETAILS -SECTION START-

A. INDOOR CONDITIONED LIGHTING CONTROL CREDITS (Adapted from NRCC-LTI-02-E) — **§ 140.6**

This Section Does Not Apply

B. INDOOR CONDITIONED LIGHTING MANDATORY LIGHTING CONTROLS (Adapted from NRCC-LTI-02-E) — **§ 130.1**

This Section Does Not Apply

Project Name:	Building 12	NRCC-PRF-01-E	Page 15 of 15
Project Address:	Needles 92363	Calculation Date/Time:	16:46, Wed, Nov 11, 2015
Compliance Scope:	NewMechanical	Input File Name:	Building 12-new.cibd

C. TAILORED METHOD LIGHTING POWER ALLOWANCE SUMMARY AND CHECKLIST (Adapted from NRCC-LTI-04-E) — **§ 140.6**

This Section Does Not Apply

D. GENERAL LIGHTING POWER (Adapted from NRCC-LTI-04-E) — **§ 140.6-D**

This Section Does Not Apply

E. GENERAL LIGHTING FROM SPECIAL FUNCTION AREAS (Adapted from NRCC-LTI-04-E) — **§ 140.6(c) 3H**

This Section Does Not Apply

F. ROOM CAVITY RATIO (Adapted from NRCC-LTI-04-E)

This Section Does Not Apply

G. ADDITIONAL "USE IT OR LOSE IT" (Adapted from NRCC-LTI-04-E)

This Section Does Not Apply

H. INDOOR & OUTDOOR LIGHTING ACCEPTANCE TESTS & FORMS (Adapted from NRCC-LTI-01-E and NRCC-LTO-01-E) — **§ 130.4**

This Section Does Not Apply

- FINAL DESIGN - FOR AGENCY APPROVAL ONLY

REGISTERED PROFESSIONAL ENGINEER — MARDEE P. SIMON — No. M-37414 — Exp. 06/30/17 — MECHANICAL — STATE OF CALIFORNIA — 11/11/2015

CALLISONRTKL A DESIGN CONSULTANCY OF ARCADIS

ARCADIS

NO.	DATE	DESCRIPTION	GM/SPEC	DWN	CHKD	SUPV	APVD BY
1	11/18/2015	FINAL DESIGN		JMH	HS	HS	RAO

REVISIONS

APPROVED BY	
RAO	SO
	SUPV HS
	DSGN Author
	DWN Author
	CHKD Checker
	OK
	DATE 11/11/15
	SCALES 12" = 1'-0"

TOPOCK GROUNDWATER REMEDIATION PROJECT
WATER CONDITIONING PLANT (BUILDING 12)
MECHANICAL T24 FORMS
GAS TRANSMISSION & DISTRIBUTION
PACIFIC GAS AND ELECTRIC COMPANY
SAN FRANCISCO, CALIFORNIA

MICROFILM

BILL OF MATL
DWG LIST
SUPSDS
SUPSD BY

SHEET NO. M-12-10 of SHEETS
REV 0

Project Number

COPYRIGHT © 2015 CALLISON

11/13/2015 11:23:54 AM K:\ARCADIS-Topock\65003 BIM\50060 Rev#\0065 Project\TOPOCK-12 MECHANICAL.rvt

N1808

PLUMBING ABBREVIATIONS

A	A	COMPRESSED AIR
	AD	AREA DRAIN
	A/D	ACCESS DOOR
	AFF	ABOVE FINISHED FLOOR
	AFG	ABOVE FINISHED GRADE
	AIR	LABORATORY COMPRESSED AIR
	ANSI	AMERICAN NATIONAL STANDARDS INSTITUTE
	ANV	ANGLE VALVE
	AQ	AQUASTAT
	ARCH	ARCHITECT
	ATM	ATMOSPHERE
	AV	ACID VENT
	AW	ACID WASTE
	AWG	AMERICAN WIRE GAUGE
B	BC	BALANCING COCK
	BFF	BELOW FINISHED FLOOR
	BFV	BUTTERFLY VALVE
	BFP	BACKFLOW PREVENTER
	BHP	BRAKE HORSEPOWER
	BTU	BRITISH THERMAL UNIT
	BTUH	BRITISH THERMAL UNITS PER HOUR
	BWV	BACKWATER VALVE
	BV	BALL VALVE
C	^ C	DEGREE CELSIUS
	CCR	CONCENTRIC REDUCER
	C TO C	CENTER TO CENTER
	CD	CONDENSATE DRAIN
	CFH	CUBIC FEET PER HOUR
	CFM	CUBIC FEET PER MINUTE
	CFS	CUBIC FEET PER SECOND
	CO	CLEANOUT
	CU FT	CUBIC FEET
	CU IN	CUBIC INCH
	CV	CHECK VALVE
	CW	COLD WATER
	CX	CONNECT TO EXISTING
D	D	DRAIN
	DBA	DECIBEL TO 'A' REFERENCE
	DE	DEIONIZED WATER
	DEG	DEGREE
	DER	DEIONIZED WATER RETURN
	DF	DIESEL FUEL
	DI	DISTILLED WATER
	DIA	DIAMETER
	DN	DOWN
	DTL	DETAIL
	DWG	DRAWING
E	(E)	EXISTING
	EC	EXPANSION COMPENSATOR
	EFF	EFFICIENCY
	EJ	EXPANSION JOINT
	EL	ELEVATION
	ER	ECCENTRIC REDUCER
	EVAC	EVACUATION (ANESTHETIC GAS)
	EWC	ELECTRIC WATER COOLER
	EX	EXISTING
	EXP	EXPANSION
F	° F	DEGREE FAHRENHEIT
	F	FIRE PROTECTION WATER SUPPLY
	FC	FLEXIBLE CONNECTOR
	FCO	FLOOR CLEANOUT
	FD	FLOOR DRAIN
	FDC	FIRE DEPARTMENT CONNECTION
	FF ELEV	FINISHED FLOOR ELEVATION
	F TO F	FACE TO FACE
	FHC	FIRE HOSE CABINET
	FHV	FIRE HOSE VALVE
	FLEX CONN	FLEXIBLE CONNECTION
	FPM	FEET PER MINUTE
	FPS	FEET PER SECOND
	FS	FLOW SWITCH OR FLOOR SINK
	F&T	FLOAT AND THERMOSTATIC
	FVC	FIRE VALVE CABINET
G	G	GAS-LOW PRESSURE (NATURAL)
	GAL	GALLON(S)
	GC	GAS COCK
	GCO	GRADE CLEANOUT
	GD	GARAGE OR GUTTER DRAIN
	GH	GROUND HYDRANT
	GLV	GLOBE VALVE
	GPD	GALLONS PER DAY
	GPH	GALLONS PER HOUR
	GPM	GALLONS PER MINUTE
	GPR	GAS PRESSURE REGULATOR
	GV	GATE VALVE
H	HB	HOSE BIBB
	HD	HEAD OR HUB DRAIN
	HPG	GAS-HIGH PRESSURE (NATURAL)
	HGT	HEIGHT
	HOR	HORIZONTAL
	HP	HORSEPOWER
	HTB	HEIGHT TO BOTTOM
	HTR	HEATER
	HVAC	HEATING VENTILATING AND AIR CONDITIONING
	HW	HOT WATER (^F)
	HWR	HOT WATER RECIRCULATING (^F)
I	ID	INSIDE DIAMETER
	INV	INVERT ELEVATION
	IPS	INTERNATIONAL PIPE STANDARD
	IRR	IRRIGATION
	IW	INDIRECT WASTE
K	KV	KITCHEN VENT
	KVTR	KITCHEN VENT THRU ROOF
	KW	KITCHEN WASTE
L	LA	LABORATORY COMPRESSED AIR
	LBS	POUNDS
	LCSA	LOUDOUN COUNTY SANITATION AUTHORITY
	LG	LENGTH
	LIN FT	LINEAR FEET
	LIQ	LIQUID
	LV	LABORATORY VACUUM
M	MA	MEDICAL COMPRESSED AIR
	MBH	THOUSAND BRITISH THERMAL UNITS PER HOUR
	MG	GAS-MEDIUM PRESSURE (NATURAL)
	MTD	MOUNTED
	MTG HGT	MOUNTING HEIGHT
	MUW	MAKE-UP WATER
	MV	MEDICAL VACUUM
N	N	NITROGEN
	NA	NOT APPLICABLE
	NC	NOISE CRITERIA
	N.C.	NORMALLY CLOSED
	NEC	NATIONAL ELECTRIC CODE
	NF	NON-FREEZE
	NIC	NOT IN CONTRACT
	N.O.	NORMALLY OPEN
	No	NUMBER
	N2O	NITROUS OXIDE
	NPR	NON-POTABLE RECLAIM
	NS	NO SCALE
	NTS	NOT TO SCALE
O	OC	ON CENTER
	OD	OUTSIDE DIAMETER
	OS&Y	OUTSIDE SCREW AND YOKE
	OSD	OPEN SITE DRAIN
	OX	OXYGEN
P	PD	PUMP DISCHARGE OR PLANTER DRAIN
	PG	PIPE GUIDE
	PGA	PRESSURE GAUGE
	PH	PHASE
	PLBG	PLUMBING
	PR	PRESSURE REGULATOR
	PRESS	PRESSURE
	PRESS DIFF	PRESSURE DIFFERENTIAL
	PRV	PRESSURE REDUCING VALVE
	PS	PRESSURE SWITCH
	PSI	POUNDS PER SQUARE INCH
	PT	PLUGGED TEE, PIPE THREAD
	PTR	PRESSURE/TEMPERATURE RELIEF VALVE
Q	QT	QUART
	QTY	QUANTITY
R	RAD	RADIUS
	RCV	RISER CONTROL VALVE
	RD	ROOF DRAIN
	RES	RESISTANCE
	REV	REVOLUTIONS
	RP	RESIDUAL PRESSURE
	RPM	REVOLUTIONS PER MINUTE
	RPS	REVOLUTIONS PER SECOND
	RPZ	REDUCED PRESSURE ZONE
	RV	RELIEF VALVE
S	SAN	SANITARY
	SEC	SECOND
	SF	SQUARE FEET
	SP	STATIC PRESSURE
	SPEC	SPECIFICATIONS
	SQ	SQUARE
	SSD	SUB SOIL DRAIN
	ST	STORM WATER
	STD	STANDARD
	STR	STRAINER
	SUCT	SUCTION
	SYM	SYMBOL
	SYS	SYSTEM
T	TD	TEMPERATURE DIFFERENCE
	TDH	TOTAL DYNAMIC HEAD
	TEMP	TEMPERATURE
	TMV	THERMOSTATIC MIXING VALVE
	TOT	TOTAL
	TP	TRAP PRIMER
	TPS	TRAP PRIMING STATION
	TS	TAMPER SWITCH
	TYP	TYPICAL
U	UD	UNDER DRAIN
	UN	UNION
	UNO	UNLESS NOTED OTHERWISE
	UG	UNDERGROUND
V	V	VENT OR VOLT
	VAC	VACUUM
	VAP PR	VAPOR PRESSURE
	VAP PRF	VAPOR PROOF
	VB	VACUUM BREAKER
	VEL	VELOCITY
	VERT	VERTICAL
	VOL	VOLUME
	VP	VELOCITY PRESSURE
	VTR	VENT THRU ROOF
W	W	WATT
	WI	WITH
	WC	WATER CLOSET
	WCO	WALL CLEANOUT
	WD	WIDE, WIDTH
	WH	WALL HYDRANT
	WHA	WATER HAMMER ARRESTER
	WT	WEIGHT
	WTR	WATER
Y	YB	YARD BOX
	YCO	YARD CLEANOUT
	YD	YARD
	YH	YARD HYDRANT
Z	Z	ZONE

RISER DESIGNATIONS

- COLD WATER RISER
- HOT WATER RISER
- F — FIRE RISER
- G — GAS RISER
- SANITARY STACK
- STORM DRAIN
- WS — WET STACK
- XX / X — SERVICE / RISER NUMBER

REFERENCE SYMBOLS

- CONNECTION TO EXISTING
- ELEVATION
- REVISION TRIANGLE
- NS — NON-SPRINKLERED AREA
- DEMOLITION WORK
- # — DEMOLITION NOTE
- # — DRAWING NOTE
- XX / 7X.XX — DETAIL NUMBER / DRAWING WHERE DETAIL IS SHOWN

FIRE PROTECTION PIPING

SP	AUTOMATIC FIRE SPRINKLER LINE
ED	EXPRESS DRAIN
F	FIRE PROTECTION WATER
DS	DRY SPRINKLER

FUEL OIL PIPING

FOF	FUEL OIL FILL
FOG	FUEL OIL GAUGE
FOR	FUEL OIL RETURN
FOS	FUEL OIL SUPPLY
FOV	FUEL OIL VENT
HPG	GAS - HIGH PRESSURE
G	GAS - LOW PRESSURE
MPG	GAS - MEDIUM PRESSURE

PLUMBING PIPING

	COLD WATER
FD	FOUNDATION DRAIN
	HOT WATER (^F)
	HOT WATER RECIRCULATING (^F)
IW	INDIRECT WASTE
KW	KITCHEN WASTE
PD	PUMP DISCHARGE
	SOIL, WASTE OR SANITARY SEWER
SD	STORM DRAIN, RAINWATER DRAIN
SSD	SUB-SOIL DRAIN
OFD	STORM DRAIN, OVERFLOW DRAIN
OFD	SUB-SOIL OVERFLOW DRAIN
	VENT

PIPING ELEMENTS

- POINT OF CONNECTION TO SITE UTILITIES
- BRANCH, BOTTOM CONNECTION
- BRANCH, SIDE CONNECTION
- BRANCH, TOP CONNECTION
- CAP ON END OF PIPE
- FLOW IN DIRECTION OF ARROW
- PIPE TURNED DOWN
- PIPE TURNED UP
- PITCH PIPE DOWN IN DIRECTION OF ARROW
- PLUGGED TEE
- RISE OR DROP
- SPOOL PIECE, FLANGED

PIPING EQUIPMENT

- AREA OR FLOOR DRAIN
- CLEANOUT, FLOOR
- OR — CLEANOUT, PLUG
- CLEANOUT, WALL
- CLEANOUT, YARD
- CONCENTRIC REDUCER
- ECCENTRIC REDUCER
- EXPANSION COMPENSATOR
- EXPANSION JOINT
- FLANGES
- FLEXIBLE CONNECTOR
- FLOOR SINK
- FLOW SWITCH
- MANUAL AIR VENT

PIPING EQUIPMENT

- PIPE ANCHOR
- PIPE GUIDE
- PIPE SLEEVE
- PLANTER DRAIN
- ROOF DRAIN
- ROOF DRAIN WITH OVERFLOW
- SPRINKLER HEAD, PENDANT
- SPRINKLER HEAD, SIDEWALL
- SPRINKLER HEAD, UPRIGHT
- STAINER
- STAINER WITH BLOWDOWN
- THERMOMETER
- UNION
- VACUUM BREAKER
- WATER HAMMER ARRESTER
- WATER PRESSURE GAUGE

SPECIALTY PIPING

AV	ACID VENT
AW	ACID WASTE
ATV	ATMOSPHERIC VENT (STEAM OR HOT VAPOR)
CL	CHLORINATED WATER
DES	DEIONIZED WATER SUPPLY
DER	DEIONIZED WATER RETURN
DIS	DISTILLED WATER SUPPLY
DIR	DISTILLED WATER RETURN
EVAC	EVACUATION (ANESTHETIC GAS)
IRR	IRRIGATION WATER
LA	LABORATORY COMPRESSED AIR
LV	LABORATORY VACUUM
A	COMPRESSED AIR (X#A, X=PSI)
MA	MEDICAL COMPRESSED AIR
MV	MEDICAL VACUUM
N	NITROGEN
N20	NITROUS OXIDE
O	OXYGEN

VALVING

- ALARM CHECK VALVE
- ANGLE VALVE
- BACKFLOW PREVENTER
- OR — BALANCING VALVE
- BALL VALVE
- OR (TS) — BUTTERFLY VALVE
- CHECK VALVE
- GAS COCK
- GATE VALVE
- GLOBE VALVE
- OUTSIDE SCREW AND YOKE GATE VALVE
- PLUG VALVE
- P — OR — PRESSURE REDUCING VALVE
- PRESSURE RELIEF VALVE
- FIRE DEPARTMENT CONNECTION
- THERMOSTATIC MIXING VALVE
- VALVE IN VERTICAL
- VALVE IN YARD BOX
- VALVE WITH TAMPER SWITCH
- WALL HYDRANT/HOSE BIBB (AS INDICATED)
- MOTOR OPERATED VALVE
- SOLENOID VALVE

GENERAL PLUMBING NOTES

1. SANITARY PIPING SHALL BE SLOPED AT A MINIMUM 1/4" PER FOOT.

- FINAL DESIGN - FOR AGENCY APPROVAL ONLY

REGISTERED PROFESSIONAL ENGINEER — MARYBEE P. SIRIBAS — No. M-37414 — Exp. 06/30/17 — MECHANICAL — STATE OF CALIFORNIA — 11/18/2015

CALLISONRTKL A DESIGN CONSULTANCY OF ARCADIS

ARCADIS

NO.	DATE	DESCRIPTION	GM/SPEC	DWN	CHKD	SUPV	APVD BY
		REVISIONS					
1	11/18/2015	FINAL DESIGN	JMH	HS	HS	RAO	
		REVISIONS					

APPROVED BY	SO
	SUPV HS
RAO	DSGN JMH
	DWN JMH
	CHKD HS
	OK
	DATE 11/18/2015
	SCALES 12" = 1'-0"

TOPOCK GROUNDWATER REMEDIATION PROJECT
WATER CONDITIONING PLANT (BUILDING 12)
PLBG LEGEND & ABBREVIATIONS
GAS TRANSMISSION & DISTRIBUTION
PACIFIC GAS AND ELECTRIC COMPANY
SAN FRANCISCO, CALIFORNIA

MICROFILM	
BILL OF MATL	
DWG LIST	
SUPSDS	
SUPSD BY	
SHEET NO. of	SHEETS
P-12-00	REV 0

N1808

Project Number

COPYRIGHT © 2015 CALLISON

11/13/2015 11:23:07 AM

K:\ARCADIS -Topock\5000 BIM\5060 Rev#5065 Project\TOPOCK-12 MECHANICAL.rvt

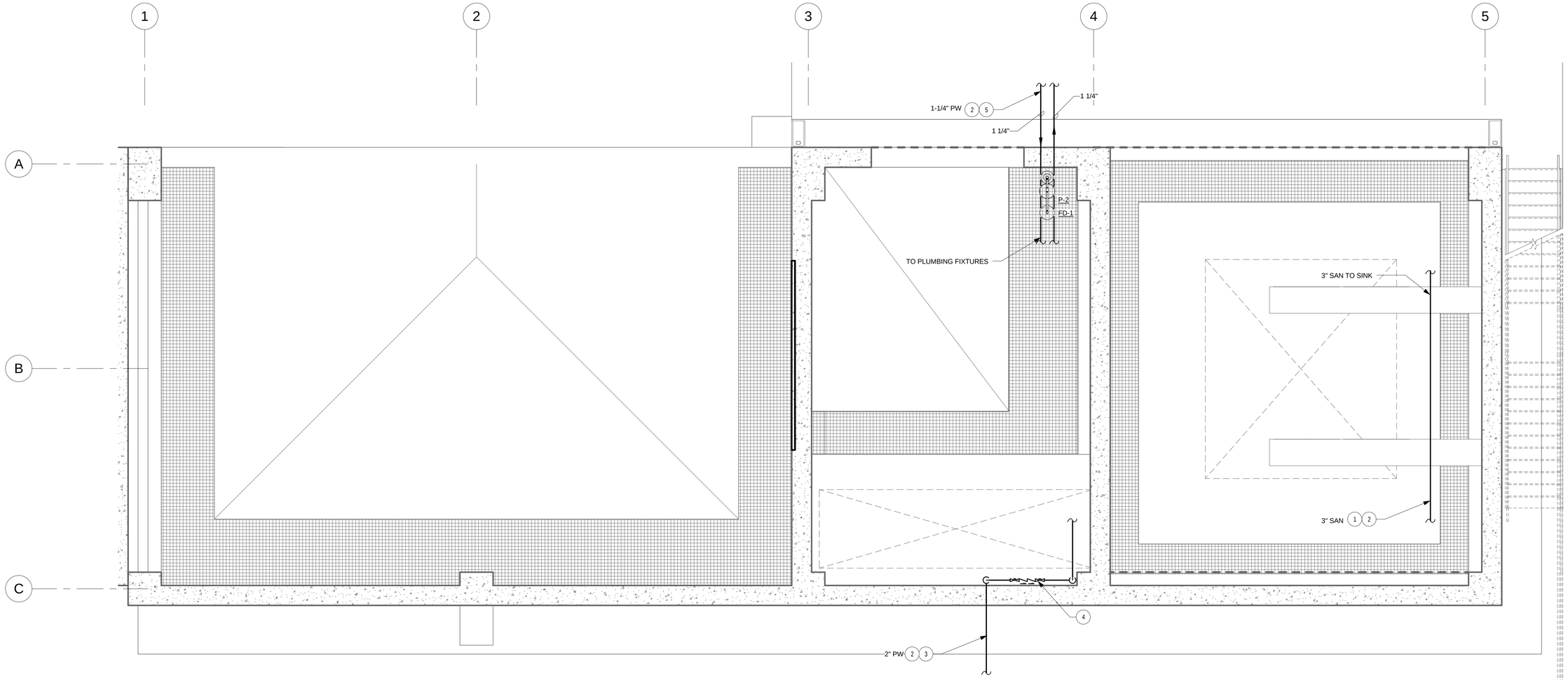

DRAWING NOTES:

1. LABORATORY WASTE TO SAFE TANK AND WASTEWATER. REFER TO SCHEMATIC.
2. PIPING LOCATED BELOW SLAB ON GRADE.
3. REFER TO CIVIL DIVISION FOR CONTINUATION.
4. RPZ BACKFLOW PREVENTER ASSEMBLY. MOUNT 3'-0" AFF.
5. TEMPERED POTABLE WATER TO AND FROM INFLUENT TANK FARM EMERGENCY SHOWER STATION. REFER TO CIVIL DIVISION FOR CONTINUATION.

SCALE: 1/4" = 1'-0"
AT: 22"x 34"
0 4' 8' 16'

- FINAL DESIGN -
FOR AGENCY
APPROVAL ONLY

REGISTERED PROFESSIONAL ENGINEER
HARDEE P. SINGH
No. M-37414
Exp. 06/30/2017
MECHANICAL
STATE OF CALIFORNIA
11/11/2015

CALLISONRTKL
A DESIGN CONSULTANCY OF ARCADIS

ARCADIS

NO.	DATE	DESCRIPTION	GM/SPEC	DWN	CHKD	SUPV	APVD BY
1	11/18/2015	FINAL DESIGN		JMH	HS	HS	RAO

REVISIONS

APPROVED BY	
RAO	

SO	
SUPV	HS
DSGN	JMH
DWN	JMH
CHKD	HS
OK	
DATE	11/18/2015
SCALES	1/4" = 1'-0"

TOPOCK GROUNDWATER REMEDIATION PROJECT
WATER CONDITIONING PLANT
(BUILDING 12)
PLUMBING FIRST FLOOR PLAN
GAS TRANSMISSION & DISTRIBUTION
PACIFIC GAS AND ELECTRIC COMPANY
SAN FRANCISCO, CALIFORNIA

MICROFILM
BILL OF MATL
DWG LIST
SUPSDS
SUPSD BY
SHEET NO. of SHEETS
P-12-01
REV 0

Project Number

COPYRIGHT © 2015 CALLISON

K:\ARCADIS - Topock\5000 BIM\5060 Revit\5065 Project\TOPOCK-12 MECHANICAL.rvt
11/13/2015 11:29:33 AM
N1808

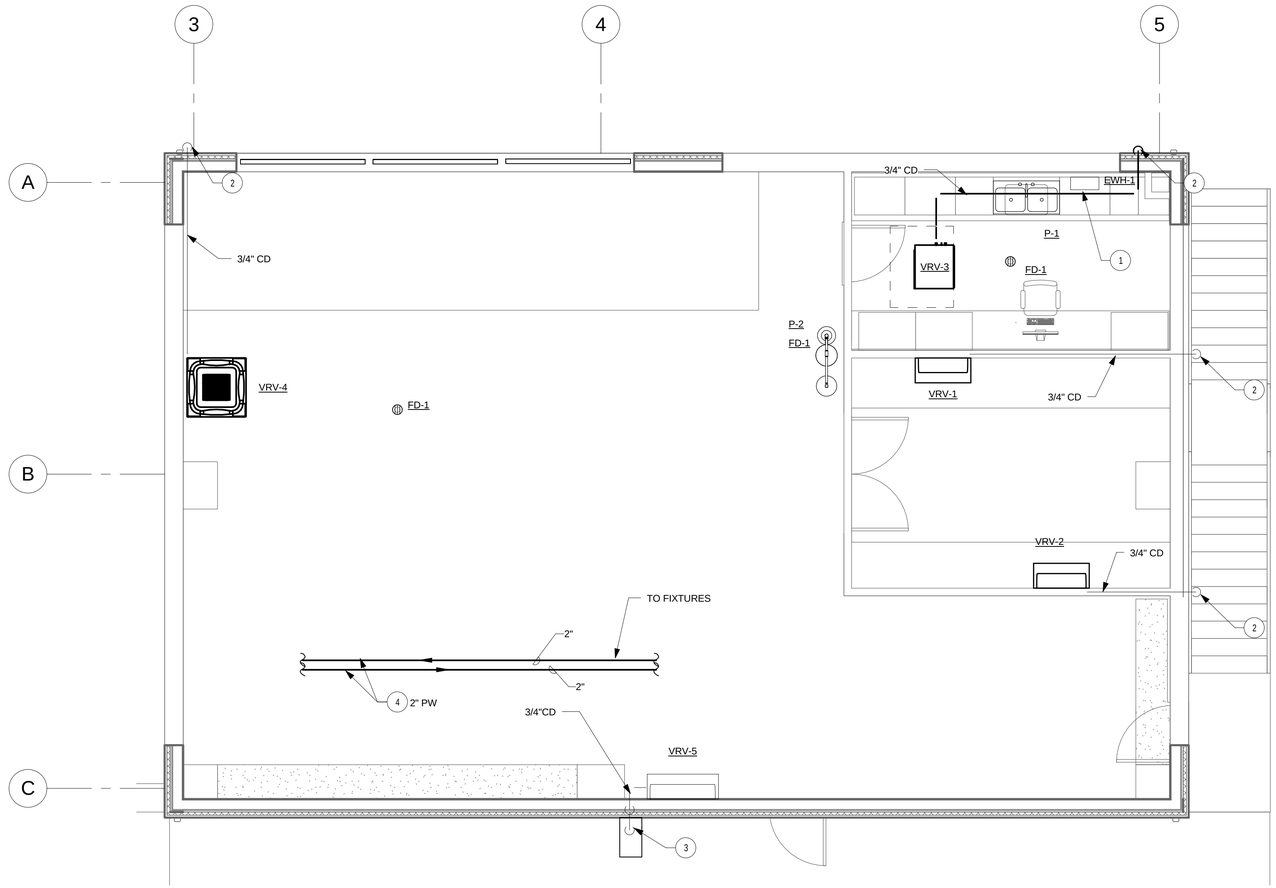

DRAWING NOTES:

1. TANKLESS, ELECTRIC WATER HEATER MOUNTED BELOW COUNTERTOP PER DETAIL.
2. PROVIDE LAMB TONGUE DOWNSPOUT NOZZLE FOR CONDENSATE DRAIN.
3. EXTEND CONDENSATE PIPING DOWN IN WALL. PROVIDE SPLASH BLOCK AT GRADE AND INDIRECT CONNECTION WITH 2" AIR GAP.
4. TEMPERED POTABLE WATER LOOP TO WATER HEATING SYSTEM. REFER TO SCHEMATIC.

SCALE: 1/4" = 1'-0"
AT: 22"x 34"

0 4' 8' 16'

- FINAL DESIGN - FOR AGENCY APPROVAL ONLY

REGISTERED PROFESSIONAL ENGINEER
HARDEEP P. SINGH
No. M-37414
Exp. 06/30/15
MECHANICAL
STATE OF CALIFORNIA
11/11/2015

CALLISONRTKL
A DESIGN CONSULTANCY OF ARCADIS

ARCADIS

NO.	DATE	DESCRIPTION	GM/SPEC	DWN	CHKD	SUPV	APVD BY
1	11/18/2015	FINAL DESIGN		JMH	HS	HS	RAO

REVISIONS

APPROVED BY	
RAO	
SO	
SUPV	HS
DSGN	JMH
DWN	JMH
CHKD	HS
OK	
DATE	11/18/2015
SCALES	1/4" = 1'-0"

TOPOCK GROUNDWATER REMEDIATION PROJECT
WATER CONDITIONING PLANT (BUILDING 12)
PLUMBING SECOND FLOOR PLAN
GAS TRANSMISSION & DISTRIBUTION
PACIFIC GAS AND ELECTRIC COMPANY
SAN FRANCISCO, CALIFORNIA

MICROFILM	
BILL OF MATL	
DWG LIST	
SUPSDS	
SUPSD BY	
SHEET NO.	of SHEETS
P-12-02	REV 0

N1808

Project Number

COPYRIGHT © 2015 CALLISON

K:\ARC\ADS -Topock\60000 BIM\60660 Revit\60660 Project\TOPOCK-12 MECHANICAL.rvt 11/13/2015 11:29:38 AM

ELECTRIC TANKLESS WATER HEATER SCHEDULE

TAG	LOCATION	SERVICE	TYPE	KW	VOLTS / PHASE	AMPS	DESIGN FLOW	TURN ON FLOW	INLET TEMP	TEMP SET	DIMENSIONS (H x W x D)	BASIS OF DESIGN	NOTES
EWH-1	REFER TO DRAWINGS	DOMESTIC HOT WATER	ELECTRIC	13.0	240 / 1	54	1.5 GPM	0.3 GPM	40°F	105°F	12" x7" x 4"	EEMAX HA013240	1, 2, 3, 4

NOTES:
1. PROVIDE QUANTITY OF TANKLESS WATER HEATERS AS NOTED ON PLANS.
2. HEATER INCLUDES ASSE 1070 INTEGRATED MIXING VALVE.
3. BASIS OF DESIGN INDICATED FOR FITTING AT TOP OF UNIT - COORDINATE MODEL NUMBER WITH FINAL PLUMBING ORIENTATION.
4. INSTALL PER MANUFACTURER'S RECOMMENDATIONS.

PLUMBING FIXTURE SCHEDULE

TAG	FIXTURE TYPE	CONNECTION(S)					FIXTURE				FITTING			MOUNTING	FLOW RATE	REMARKS
		CW	HW	TRAP	SAN	VENT	MFGR	MODEL	TYPE	SIZE	MFGR	MODEL	TYPE			
P-1	TWO COMPARTMENT SINK	1/2"	1/2"	1-1/2"	2"	1-1/2"	ELKAY	LRAD3321	STAINLESS STEEL, CENTER HOLE ONLY	33"x21-1/4" x6-1/2" OVERALL	ZURN	Z8314C4-XL-ICT-18F	DECK MTD, 8" FIXED CENTERS, 8" GOOSENECK SPOUT, WRIST BLADE HANDLES, LOW LEAD COMPLIANT	COUNTER-TOP, DROP IN	1.5 GPM	LAMINAR FLOW CONTROL, TYPE 304 S/S GRID STRAINGER, P-TRAP
P-2	EMERGENCY SHOWER AND EYEWASH	-	1-1/4" (TEPID)	-	1-1/4"	-	GUARDIAN	G1909P	EMERGENCY SHOWER, WIDE AREA EYE/ FACE WASH (4 OUTLETS)	-	-	-	-	FLOOR MTD (PEDESTAL)	20 GPM (SHOWER), 3 GPM (EYE WASH)	ELECTRIC ALARM UNIT (FLASHING LIGHT/HORN)

DRAIN SCHEDULE

TAG	FIXTURE	PIPE SIZE	STRAINER SIZE	STRAINER FREE AREA (SQ. IN.)	TRAP PRIMER SIZE	BASIS OF DESIGN	NOTE(S)
FD-1	EQUIP. DRAIN	3"	6"	11	1/2"	JOSAM 30003-6A-VP	1,2

NOTES:
1. PROVIDE SECURED GRATE.
2. PROVIDE TRAP PRIMER CONNECTION FROM TRAP PRIMING STATION.

- FINAL DESIGN -
FOR AGENCY
APPROVAL ONLY

REGISTERED PROFESSIONAL ENGINEER
HARDEE P. SINGH
No. M-37414
Exp. 06/30/2017
MECHANICAL
STATE OF CALIFORNIA
11/11/2015

CALLISONRTKL
A DESIGN CONSULTANCY OF ARCADIS

ARCADIS

NO.	DATE	DESCRIPTION	GM/SPEC	DWN	CHKD	SUPV	APVD BY
1	11/18/2015	FINAL DESIGN		JMH	HS	HS	RAO

REVISIONS

APPROVED BY: RAO

SO	
SUPV	HS
DSGN	JMH
DWN	JMH
CHKD	HS
OK	
DATE	11/18/2015
SCALES	12" = 1'-0"

TOPOCK GROUNDWATER REMEDIATION PROJECT
WATER CONDITIONING PLANT
(BUILDING 12)
PLUMBING SCHEDULES
GAS TRANSMISSION & DISTRIBUTION
PACIFIC GAS AND ELECTRIC COMPANY
SAN FRANCISCO, CALIFORNIA

MICROFILM
BILL OF MATL
DWG LIST
SUPSDS
SUPSD BY
SHEET NO. of SHEETS
P-12-03
REV 0

Project Number

COPYRIGHT © 2015 CALLISON

N1808

K:\ARCADIS - Topock\5000 BIM\5000 Revit\5065 Project\TOPOCK-12 MECHANICAL.rvt
11/13/2015 11:23:17 AM

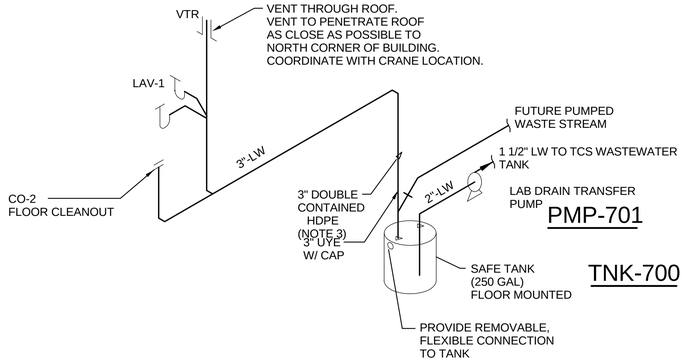

NOTES:

1.PROVIDE PUMP CONTROL SYSTEM WITH HI AND HI-HI LOCAL ALARMS FOR TANK LEVEL.
2.PROVIDE IN-LINE PUMP (PMP-701) FOR DISCHARGE TO TCS WASTEWATER TANK.
3. SEE SPECIFICATION 221001.08.

1 LAB DRAIN
NTS

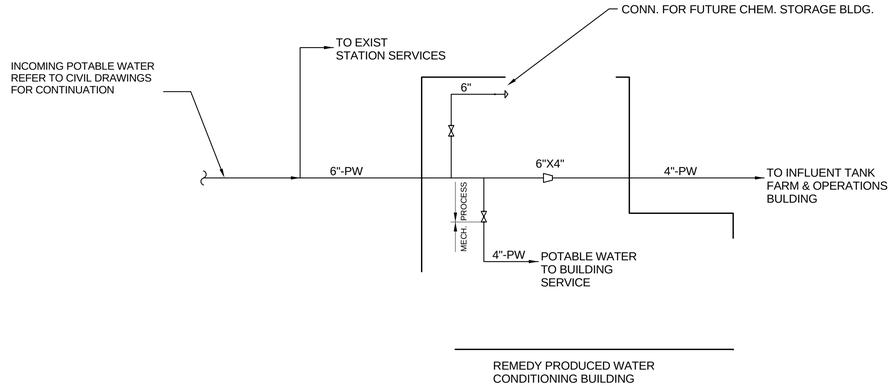

2 POTABLE WATER SUPPLY SCHEMATIC
NTS

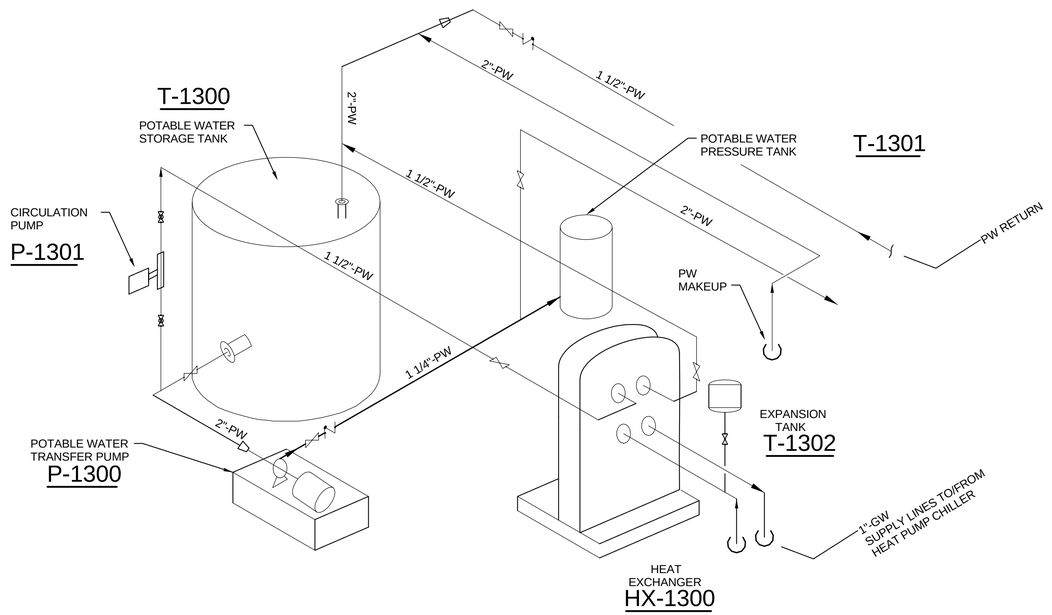

3 POTABLE WATER EQPT SCHEMATIC
NTS

- FINAL DESIGN -
FOR AGENCY
APPROVAL ONLY

REGISTERED PROFESSIONAL ENGINEER
MARCEE P. SINGH
No. M-37414
Exp. 06/30/2017
MECHANICAL
STATE OF CALIFORNIA
11/19/2015

CALLISONRTKL
A DESIGN CONSULTANCY OF ARCADIS
ARCADIS

NO.	DATE	DESCRIPTION	GM/SPEC	DWN	CHKD	SUPV	APVD BY
1	11/18/2015	FINAL DESIGN	JMH	HS	HS	RAO	

REVISIONS

APPROVED BY	
RAO	
SO	
SUPV	HS
DSGN	Author
DWN	Author
CHKD	Checker
OK	
DATE	11/13/15
SCALES	12" = 1'-0"

TOPOCK GROUNDWATER REMEDIATION PROJECT
WATER CONDITIONING PLANT
(BUILDING 12)
PLUMBING SCHEMATICS
GAS TRANSMISSION & DISTRIBUTION
PACIFIC GAS AND ELECTRIC COMPANY
SAN FRANCISCO, CALIFORNIA

MICROFILM	
BILL OF MATL	
DWG LIST	
SUPSDS	
SUPSD BY	
SHEET NO.	of SHEETS
P-12-04	REV 0

Project Number

COPYRIGHT © 2015 CALLISON

K:\ARCADIS-Topock\60000 BIM\5000 Revit\5055 Project\TOPOCK-12 MECHANICAL.rvt
11/13/2015 11:23:22 AM

N1808

NOTES:

1. INSTALL A DIGITAL CONTROL SWITCH EQUIVALENT (LOVE SERIES TS). SWITCH SHALL BE CAPABLE OF CONTROLLING THE HEAT PUMP IN COOLING OR HEATING MODE. INSTALL A SUITABLE SENSOR BULB (INCLUDED WITH LOVE CONTROLLER) IN PORTABLE WATER CIRCULATING LOOP. FIELD FIT AS NECESSARY.

2. HEAT PUMP SHALL MAINTAIN THE WATER AT 75º F PLUS OR MINUS 10º F. UPON A CALL FOR HEATING OR COOLING, THE HEAT PUMP REVERSING VALVE SHALL SWITCH AS REQUIRED AND THE CIRCULATION PUMP AND CHILLER SHALL START. MINIMUM RUN TIME SHALL BE SET AT 20 MINUTES.

3. EQUIPMENT:
A. HEAT PUMP: MULTI-AQUA MACH 060-1 CH-1300
B. HEAT EXCHANGER: BELL & GOSSETT PLATE TYPE BPX 415-60 HX-1300
C. CIRCULATION PUMP: BELL & GOSSETT BOOSTER PL-55 (2/5 HP) P-1301
D. CONTROLLER: LOVE SERIES TS WITH PROBE TIC-1300
E. INSTANTANEOUS WATER HEATER
F. POTABLE WATER STORAGE TANK

4. GW SERVICE IS A MIXTURE OF 40% GLYCOL AND WATER.

5. PROVIDE REDUCERS AS REQUIRED TO MATCH FITTINGS ON CH-1300.

6. INSTALL SHOCK ARRESTORS AT EACH SAFETY SHOWER.

7. INSTANTANEOUS WATER HEATER EWH-1.

8. LOCATE BFD ASSEMBLY W/ 3 FEET OF CLEARANCE IN FRONT FOR MAINTENANCE ACCESS.

9. BELL & GOSSETT CIRCUIT SETTER MODEL CB-1 1/2"-117104. SET FLOW AT 5 GPM.

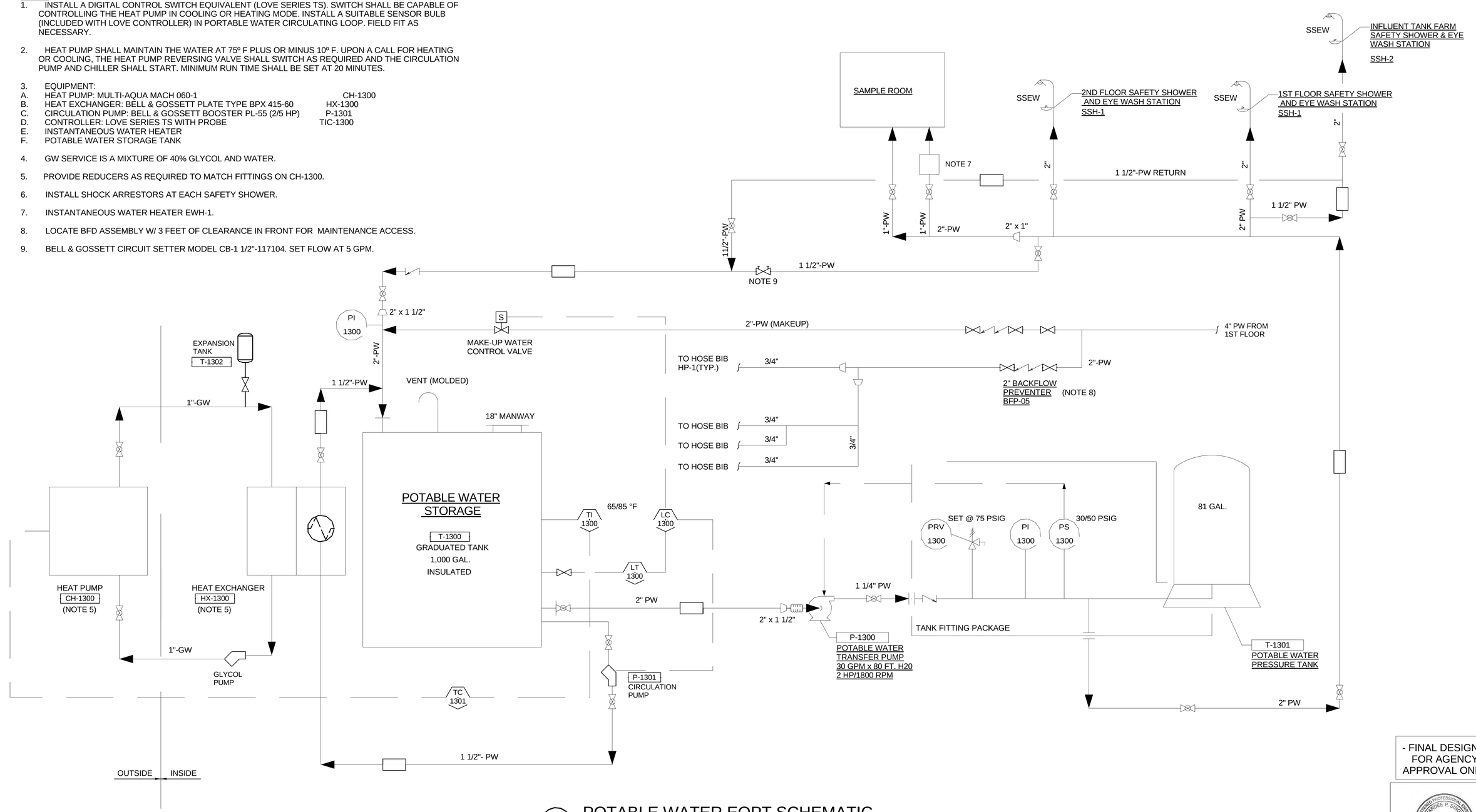

1 POTABLE WATER EQPT SCHEMATIC
NTS

- FINAL DESIGN -
FOR AGENCY APPROVAL ONLY

REGISTERED PROFESSIONAL ENGINEER HARDEE P. SINGH No. M-37414 Exp. 06/30/2017 MECHANICAL STATE OF CALIFORNIA
11/11/2015

CALLISONRTKL
A DESIGN CONSULTANCY OF ARCADIS

ARCADIS

NO.	DATE	DESCRIPTION	GM/SPEC	DWN	CHKD	SUPV	APVD BY
1	11/18/2015	FINAL DESIGN		JMH	HS	HS	RAO

REVISIONS

APPROVED BY: RAO

SO	
SUPV	HS
DSGN	Author
DWN	Author
CHKD	Checker
OK	
DATE	11/13/15
SCALES	12" = 1'-0"

TOPOCK GROUNDWATER REMEDIATION PROJECT
WATER CONDITIONING PLANT
(BUILDING 12)
PLUMBING SCHEMATICS
GAS TRANSMISSION & DISTRIBUTION
PACIFIC GAS AND ELECTRIC COMPANY
SAN FRANCISCO, CALIFORNIA

MICROFILM
BILL OF MATL
DWG LIST
SUPSDS
SUPSD BY
SHEET NO. of SHEETS
P-12-05
REV 0

Project Number

COPYRIGHT © 2015 CALLISON

N1808

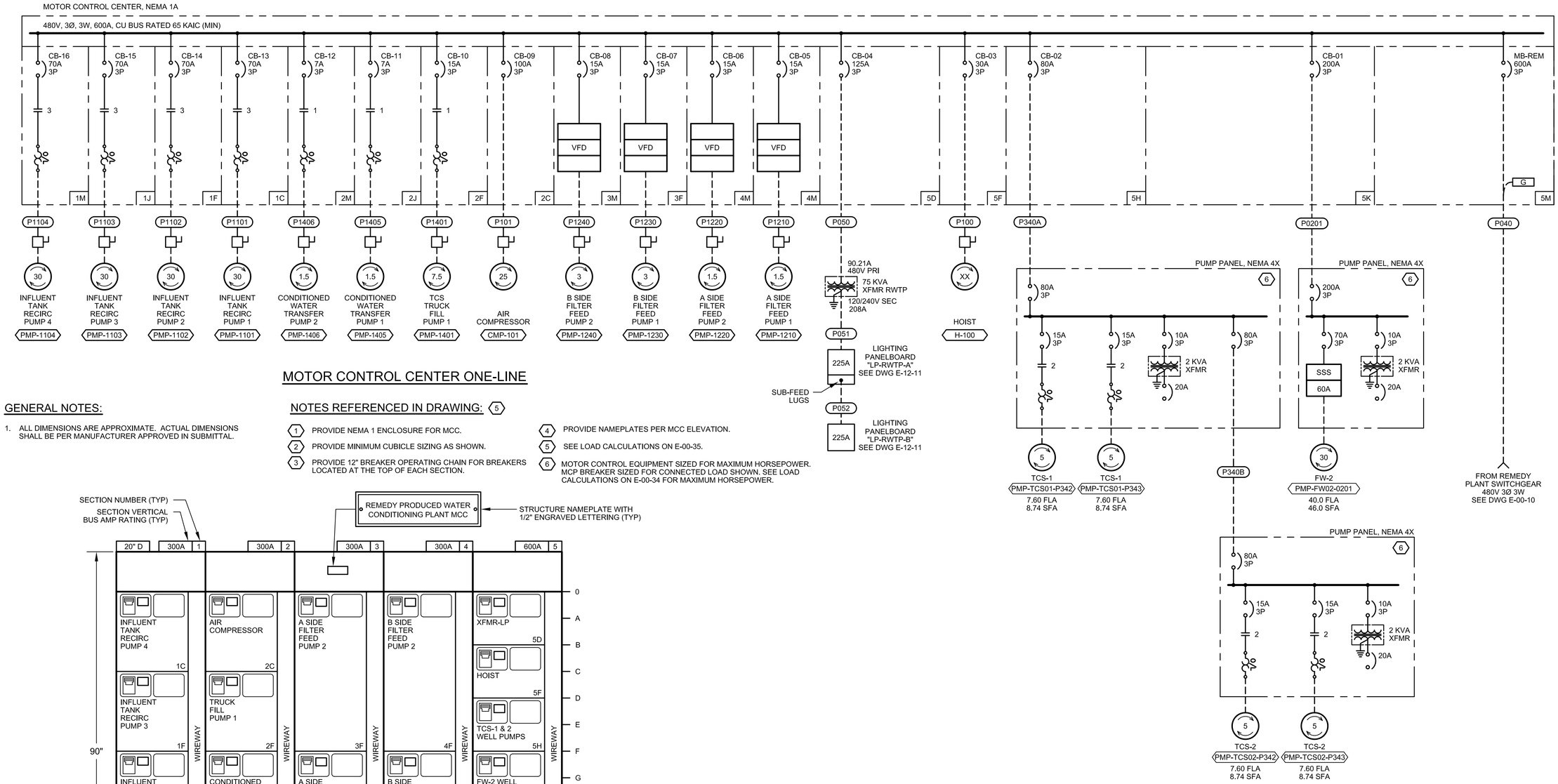

MOTOR CONTROL CENTER ONE-LINE

GENERAL NOTES:

1. ALL DIMENSIONS ARE APPROXIMATE. ACTUAL DIMENSIONS SHALL BE PER MANUFACTURER APPROVED IN SUBMITTAL.

NOTES REFERENCED IN DRAWING: (5)

(1) PROVIDE NEMA 1 ENCLOSURE FOR MCC.

(2) PROVIDE MINIMUM CUBICLE SIZING AS SHOWN.

(3) PROVIDE 12" BREAKER OPERATING CHAIN FOR BREAKERS LOCATED AT THE TOP OF EACH SECTION.

(4) PROVIDE NAMEPLATES PER MCC ELEVATION.

(5) SEE LOAD CALCULATIONS ON E-00-35.

(6) MOTOR CONTROL EQUIPMENT SIZED FOR MAXIMUM HORSEPOWER. MCP BREAKER SIZED FOR CONNECTED LOAD SHOWN. SEE LOAD CALCULATIONS ON E-00-34 FOR MAXIMUM HORSEPOWER.

MCC ELEVATION

- FINAL DESIGN - FOR AGENCY APPROVAL ONLY

REGISTERED PROFESSIONAL ENGINEER JOHN M. SIOCO 20532 Exp. 9-30-17 ELECTRICAL STATE OF CALIFORNIA

FRISCH ENGINEERING, INC.
CONSULTING ELECTRICAL ENGINEERS
13405 FOLSOM BLVD, UNIT 600
FOLSOM, CA 95630
PH 916 353 1025
WWW.FRISCHENGINEERING.COM

ARCADIS

NO.	DATE	DESCRIPTION	GM/SPEC	DWN	CHKD	SUPV	APVD BY
2	11/18/15	FINAL DESIGN		MBY	TPF	JMS	RAO
1	9/8/14	PRE-FINAL (90%) DESIGN		MBY			TPF
0	4/5/13	INTERMEDIATE (60%) DESIGN		MBY			TPF

REVISIONS

APPROVED BY	
RAO	

SO	
SUPV	JMS
DSGN	MBY
DWN	MBY
CHKD	TPF
OK JMS	
DATE	
SCALES	N/A

TOPOCK GROUNDWATER REMEDIATION PROJECT
REMEDY PRODUCED WATER CONDITIONING PLANT
MCC ONE-LINE & ELEVATION
GAS TRANSMISSION & DISTRIBUTION

PACIFIC GAS AND ELECTRIC COMPANY
SAN FRANCISCO, CALIFORNIA

MICROFILM	
BILL OF MATL	
DWG LIST	
SUPSDS	
SUPSD BY	
SHEET NO.	of SHEETS
E-12-01	REV 1

PLOT DATE: Oct 29, 2015 PLOT TIME: 3:58:49pm
FILENAME: E-12-01.dwg

N1808

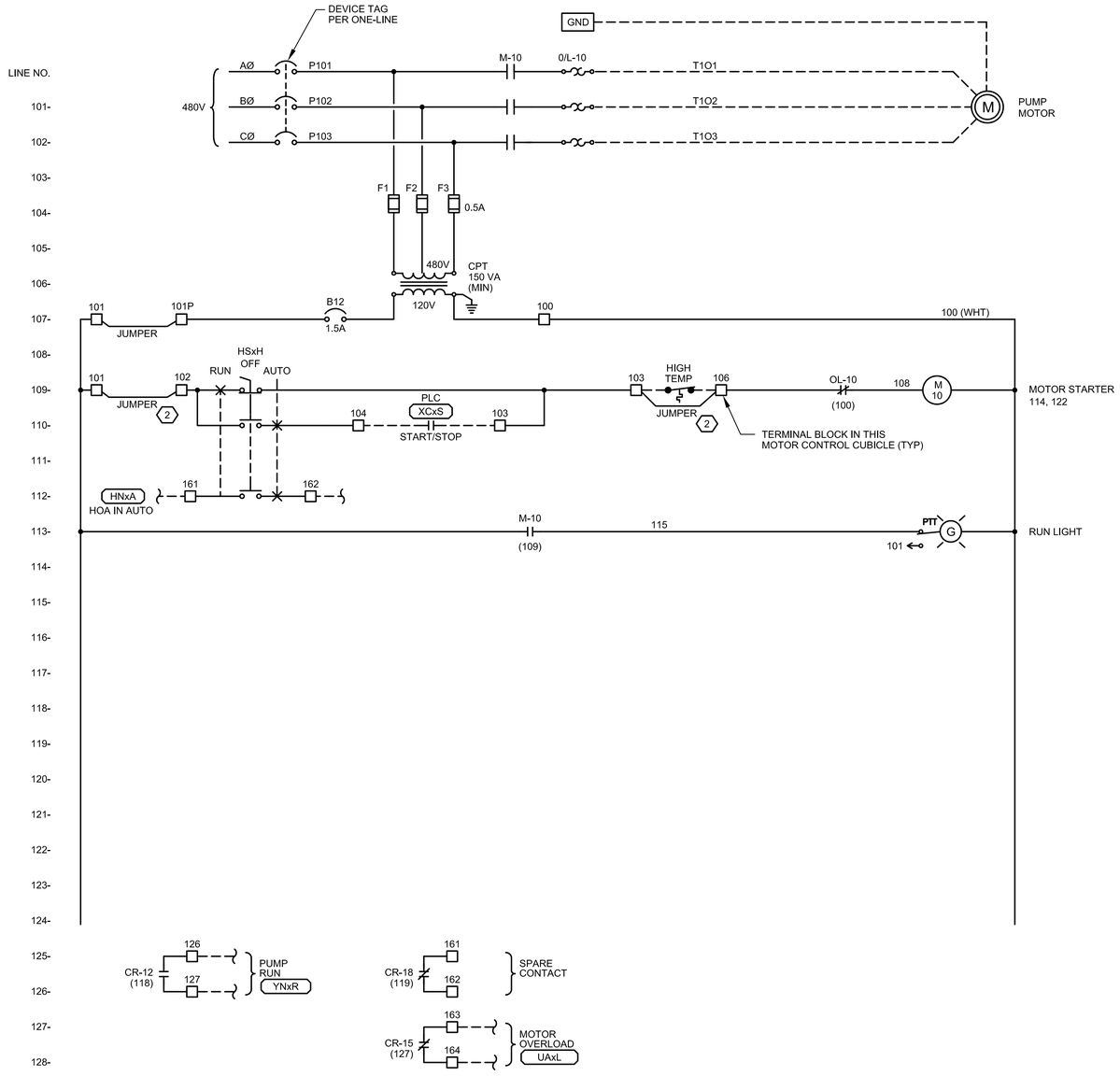

FVNR CENTRIFUGAL MOTOR ELEMENTARY DIAGRAM

PXXX PXXX

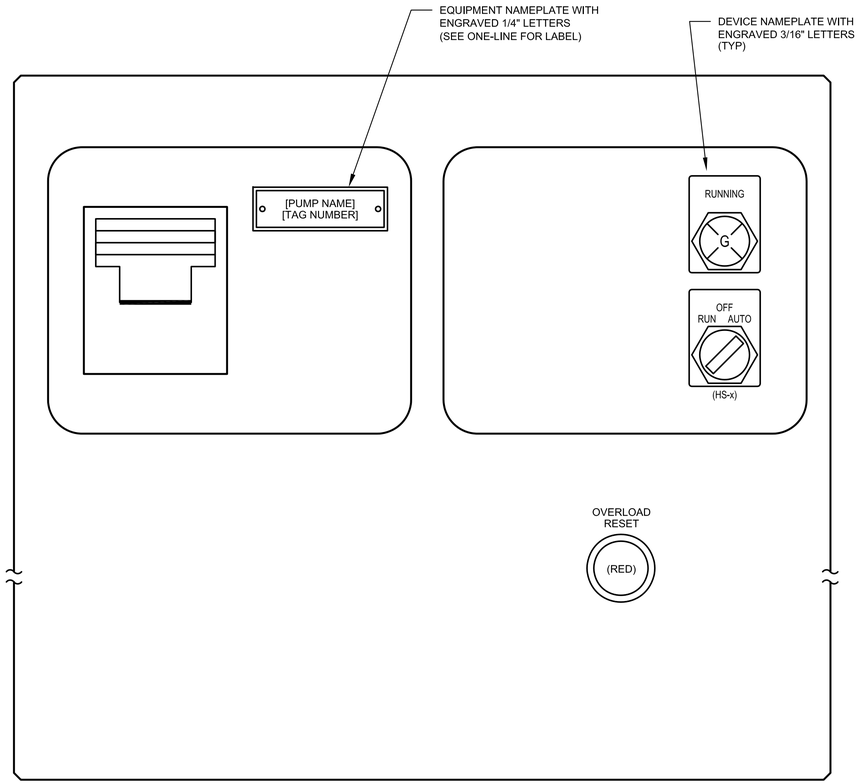

CUBICLE DOOR LAYOUT

NOTES REFERENCED IN DRAWING:

1. SET TIME DELAY ON DROP TO 0.5 SECONDS.
2. REMOVE JUMPER FOR DEVICE WHEN CONNECTED.

GENERAL NOTES:

1. SIMILAR DIAGRAM FOR PUMPS LISTED AND PER P&IDS.
2. TERMINAL BLOCKS AND WIRES SHALL BE LABELED SAME EXCEPTION: WIRES TO PLC SHALL BE NUMBERED PER CONTROL PANEL TERMINAL BLOCK NUMBER.

- FINAL DESIGN - FOR AGENCY APPROVAL ONLY

REGISTERED PROFESSIONAL ENGINEER JOHN M. SIOOTIS 20532 Exp. 9-30-17 ELECTRICAL STATE OF CALIFORNIA

FRISCH ENGINEERING, INC.
CONSULTING ELECTRICAL ENGINEERS
13405 FOLSOM BLVD, UNIT 600
FOLSOM, CA 95630
PH 916 353 1025
WWW.FRISCHENGINEERING.COM

ARCADIS

NO.	DATE	DESCRIPTION	GM/SPEC	DWN	CHKD	SUPV	APVD BY
2	11/18/15	FINAL DESIGN	MBY	TPF	JMS	RAO	
1	9/8/14	PRE-FINAL (90%) DESIGN	MBY			TPF	
0	4/5/13	INTERMEDIATE (60%) DESIGN	MBY			TPF	

REVISIONS

APPROVED BY	
	RAO

SO	
SUPV	JMS
DSGN	MBY
DWN	MBY
CHKD	TPF
OK	JMS
DATE	
SCALES	N/A

TOPOCK GROUNDWATER REMEDIATION PROJECT
REMEDY PRODUCED WATER CONDITIONING PLANT
FVNR ELEMENTARY DIAGRAM
GAS TRANSMISSION & DISTRIBUTION
PACIFIC GAS AND ELECTRIC COMPANY
SAN FRANCISCO, CALIFORNIA

MICROFILM	
BILL OF MATL	
DWG LIST	
SUPSDS	
SUPSD BY	
SHEET NO.	of SHEETS
E-12-02	REV 1

PLOT DATE: Oct 23, 2015 PLOT TIME: 3:58:56pm
FILENAME: E-12-02.dwg

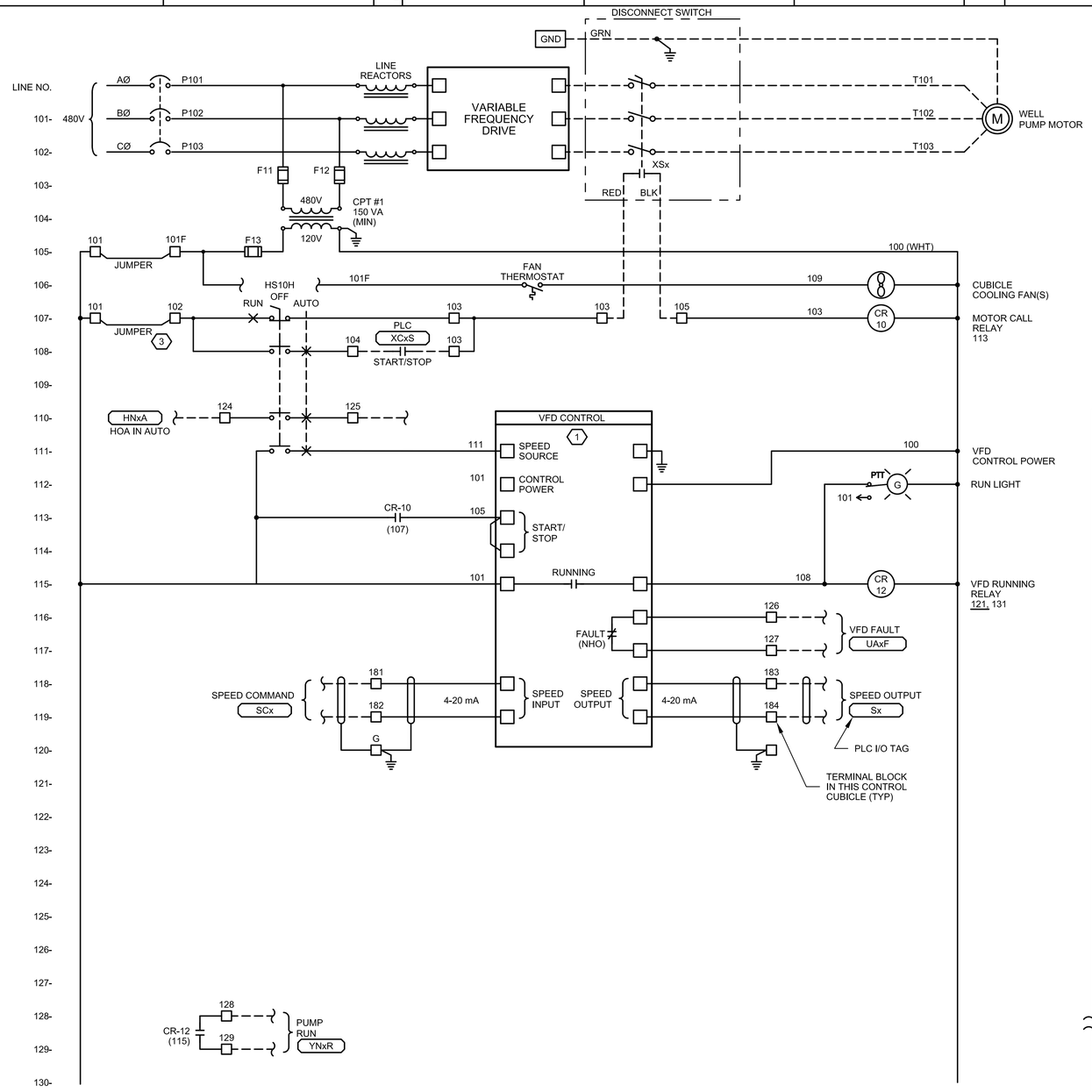

VFD ELEMENTARY DIAGRAM

NOTES REFERENCED IN DRAWING:

1. PROVIDE VFD WITH 120 VAC CONTROL CIRCUIT INTERFACE AND ELECTRONIC OVERLOAD PROTECTION.
2. REMOVE JUMPER FOR DEVICE WHEN CONNECTED.

GENERAL NOTES:

1. TERMINAL BLOCKS AND WIRES SHALL BE LABELED SAME EXCEPTION: WIRES TO PLC SHALL BE NUMBERED PER CONTROL PANEL TERMINAL BLOCK NUMBER.
2. SIMILAR DIAGRAM FOR ALL VFD MOTORS AS SHOWN IN ONE-LINE DIAGRAM

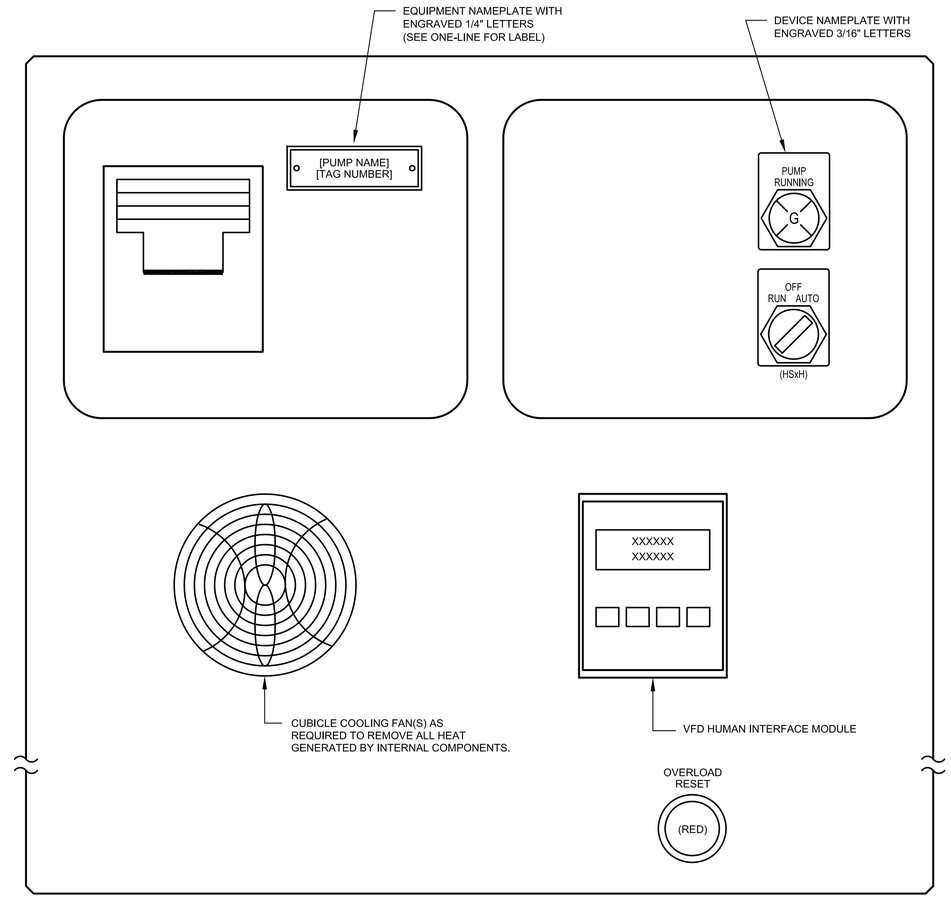

DOOR LAYOUT

NOT TO SCALE

- FINAL DESIGN - FOR AGENCY APPROVAL ONLY

REGISTERED PROFESSIONAL ENGINEER JOHN M. SIDDI 20532 Exp. 9-30-17 ELECTRICAL STATE OF CALIFORNIA

FRISCH ENGINEERING, INC.
CONSULTING ELECTRICAL ENGINEERS
13405 FOLSOM BLVD, UNIT 600
FOLSOM, CA 95630
PH 916 353 1025
WWW.FRISCHENGINEERING.COM

ARCADIS

NO.	DATE	DESCRIPTION	GM/SPEC	DWN	CHKD	SUPV	APVD BY
2	11/18/15	FINAL DESIGN		MBY	TPF	JMS	RAO
1	9/8/14	PRE-FINAL (90%) DESIGN		MBY			TPF
0	4/5/13	INTERMEDIATE (60%) DESIGN		MBY			TPF

REVISIONS

APPROVED BY	
RAO	

SO	
SUPV	JMS
DSGN	MBY
DWN	MBY
CHKD	TPF
OK	JMS
DATE	
SCALES	N/A

TOPOCK GROUNDWATER REMEDIATION PROJECT
REMEDY PRODUCED WATER CONDITIONING PLANT
VFD ELEMENTARY DIAGRAM
GAS TRANSMISSION & DISTRIBUTION
PACIFIC GAS AND ELECTRIC COMPANY
SAN FRANCISCO, CALIFORNIA

MICROFILM	
BILL OF MATL	
DWG LIST	
SUPSDS	
SUPSD BY	
SHEET NO.	of SHEETS
E-12-03	REV 1

PLOT DATE: Oct 29, 2015 PLOT TIME: 3:59:05pm
FILENAME: E-12-03.dwg

N1808

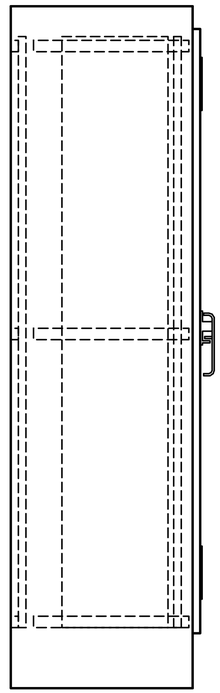

SIDE ELEVATION

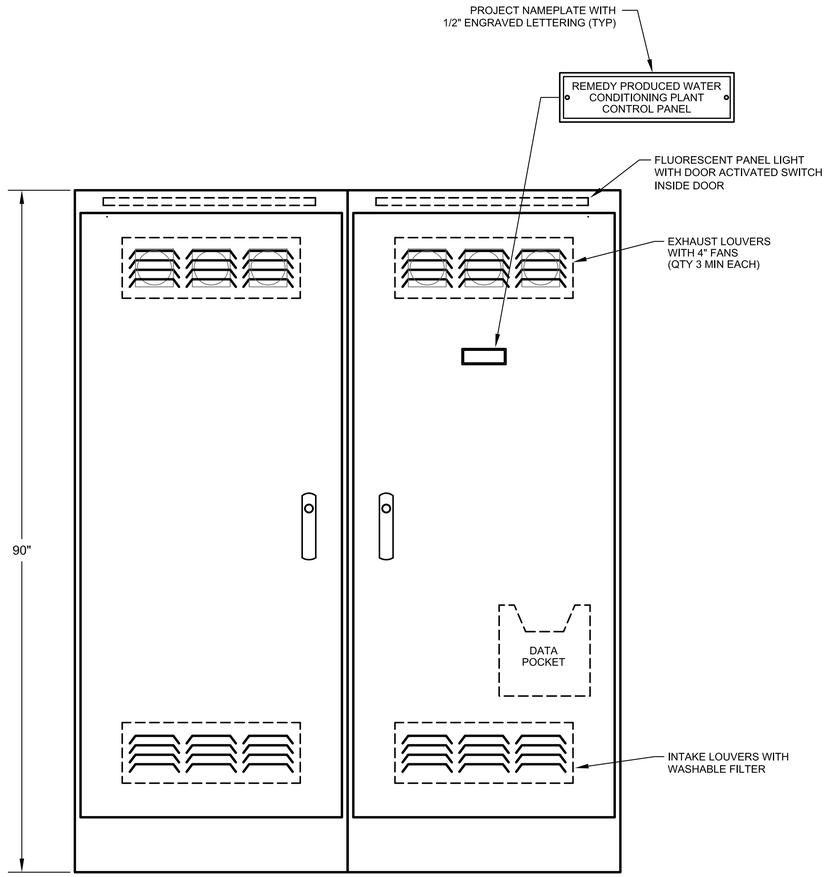

FRONT ELEVATION

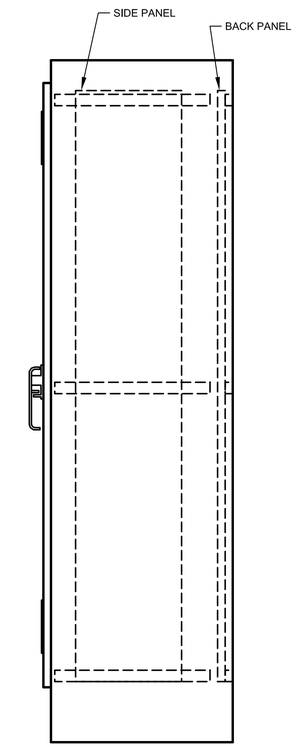

SIDE ELEVATION

ELEVATION

1" = 20"

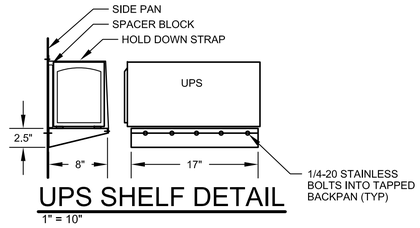

UPS SHELF DETAIL

1" = 10"

DETAIL NOTES:

1. DO NOT BLOCK VENTS WITH SPACER BLOCK. USE TWO.
2. FABRICATED FROM 14 GA (MIN) PAINTED GALVANEAL OR STAINLESS STEEL SOLID SIDES, TOP, BACK AND FRONT WITH CONTINUOUS WELDED SEAMS.

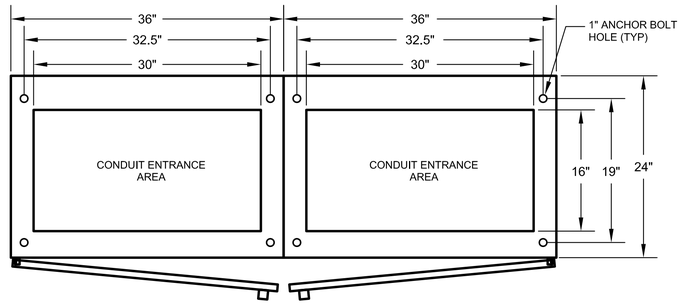

BASE PLAN

1" = 20"

PANEL FABRICATION METHODS

1. NEMA 12, OPEN BOTTOM.
2. OUTER DOOR SEALED WITH RUBBERIZED FOAM GASKET.
3. PANEL SHALL BE FABRICATED FROM PAINT BOND GALVANEAL SHEET STEEL.
4. 12 GAUGE EXTERIOR AND 14 GAUGE INTERIOR.
5. ALL SEAMS SHALL HAVE CONTINUOUS WELD GROUND SMOOTH.
6. DOOR TO BE PADLOCKABLE WITH HEAVY DUTY 3 POINT LATCH.
7. DOOR HINGES AND PINS SHALL BE CONTINUOUS, HEAVY DUTY.
8. NO SCREWS, RIVETS, OR BOLTS SHALL PROTRUDE EXTERNALLY.
9. INTERNAL SCREWS, RIVETS, BOLTS, AND NUTS SHALL BE MACHINE THREAD INTO TAPPED BACKPAN.
10. EXTERIOR PANEL COLOR: ANSI 61 GRAY.
11. MOUNTING PAN AND INTERIOR DOOR COLOR: WHITE.
12. FABRICATION AND WIRING SHALL CONFORM TO U.L. AND NEMA STANDARDS.
13. ALL WIRING SHALL BE PERMANENTLY LABELED WITH WIRE MARKERS ON BOTH ENDS.
14. WIRING DIAGRAMS SHALL BE PLACED IN A PLASTIC DRAWING HOLDER PERMANENTLY ATTACHED TO THE INSIDE OF THE FRONT DOOR.
15. AS - BUILT WIRING DIAGRAMS SHALL BE SHIPPED WITH EQUIPMENT.
16. UPS SHELF SHALL BE 14GA PAINTED STEEL BOLTED TO SIDEPAN.

- FINAL DESIGN -
FOR AGENCY
APPROVAL ONLY

REGISTERED PROFESSIONAL ENGINEER
JOHN M. SIGOTA
20532
Exp. 9-30-17
ELECTRICAL
STATE OF CALIFORNIA

FRISCH ENGINEERING, INC.
CONSULTING ELECTRICAL ENGINEERS
13405 FOLSOM BLVD, UNIT 600
FOLSOM, CA 95630
PH 916 353 1025
WWW.FRISCHENGINEERING.COM

ARCADIS

NO.	DATE	DESCRIPTION	GM/SPEC	DWN	CHKD	SUPV	APVD BY
2	11/18/15	FINAL DESIGN		MBY	TPF	JMS	RAO
1	9/8/14	PRE-FINAL (90%) DESIGN		MBY		TPF	
0	4/5/13	INTERMEDIATE (60%) DESIGN		MBY		TPF	

REVISIONS

APPROVED BY	
RAO	

SO	
SUPV	JMS
DSGN	MBY
DWN	MBY
CHKD	TPF
OK	JMS
DATE	
SCALES	N/A

TOPOCK GROUNDWATER REMEDIATION PROJECT

REMEDY PRODUCED WATER CONDITIONING PLANT CONTROL PANEL ELEVATION

GAS TRANSMISSION & DISTRIBUTION

PACIFIC GAS AND ELECTRIC COMPANY
SAN FRANCISCO, CALIFORNIA

MICROFILM	
BILL OF MATL	
DWG LIST	
SUPSDS	
SUPSD BY	
SHEET NO.	of SHEETS
E-12-04	REV 1

FILENAME: E-12-04.dwg
PLOT DATE: Oct 29, 2015 PLOT TIME: 3:59:11pm

N1808

LAYOUT REFERENCED NOTES:

(1) WIRE I/O TO TERMINAL BLOCK PER EXAMPLE I/O WIRING DIAGRAMS.

GENERAL NOTES:

1. REPRESENTATIVE OF MAJOR COMPONENTS ONLY. ACTUAL BACKPAN LAYOUT SHALL BE SIMILAR TO LAYOUT SHOWN. SUBMIT SCALED BACKPAN LAYOUT FOR REVIEW BY ENGINEER.
2. QUANTITY OF TERMINAL BLOCKS AND RELAYS SHALL BE AS DETERMINED BY P&IDS AND EXAMPLE I/O WIRING DIAGRAM, DWG E-11.

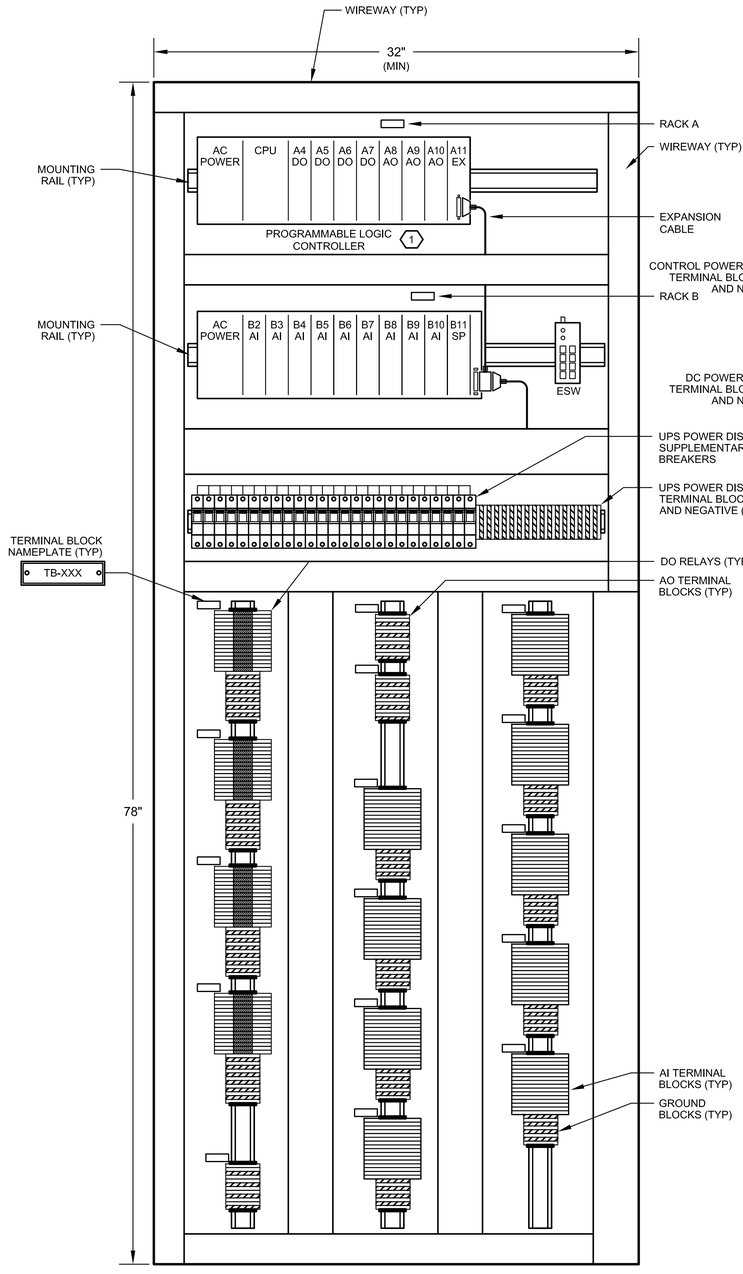

LEFT CENTER (1)

BACKPAN LAYOUT

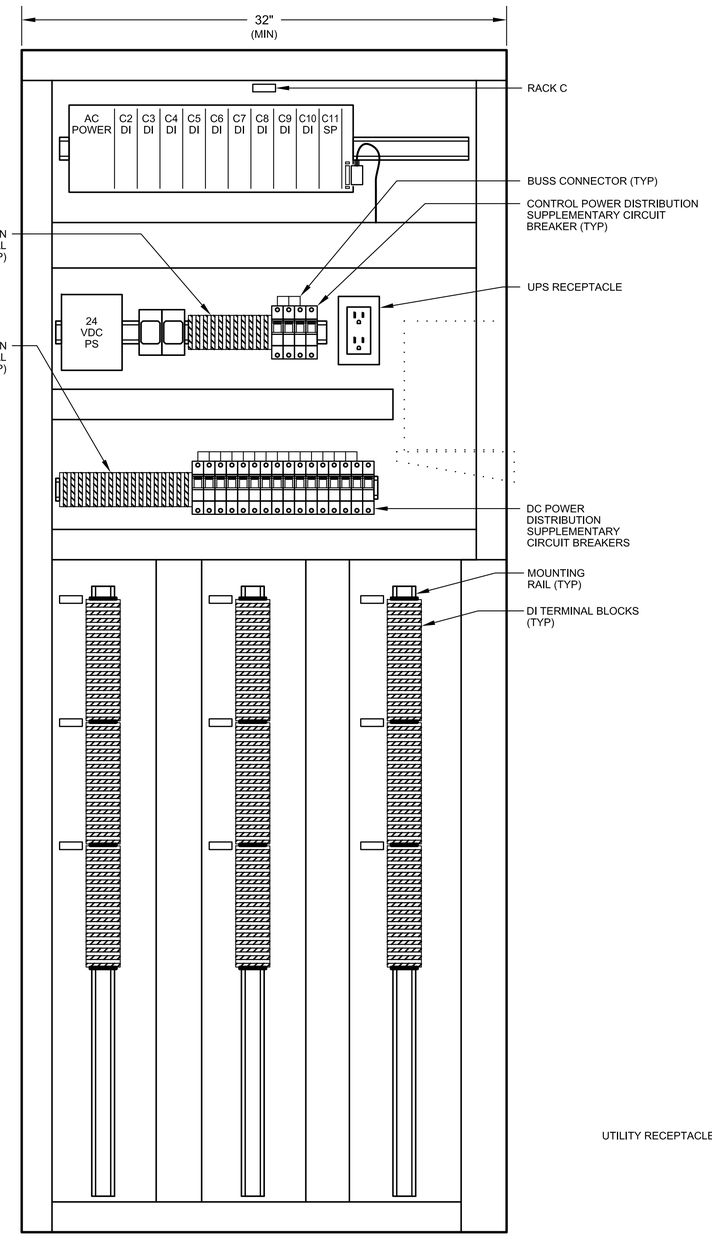

RIGHT CENTER (1)

BACKPAN LAYOUT

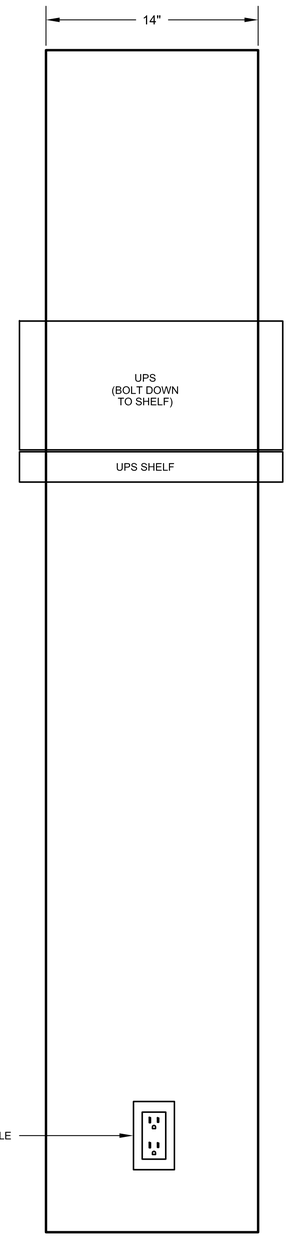

RIGHT

SIDEPAN LAYOUT

1" = 10"

- FINAL DESIGN - FOR AGENCY APPROVAL ONLY

REGISTERED PROFESSIONAL ENGINEER JOHN M. SIOOTIS 20532 Exp. 9-30-17 ELECTRICAL STATE OF CALIFORNIA

FRISCH ENGINEERING, INC.
CONSULTING ELECTRICAL ENGINEERS
13405 FOLSOM BLVD, UNIT 600
FOLSOM, CA 95630
PH 916 353 1025
WWW.FRISCHENGINEERING.COM

ARCADIS

NO.	DATE	DESCRIPTION	GM/SPEC	DWN	CHKD	SUPV	APVD BY
2	11/18/15	FINAL DESIGN		MBY	TPF	JMS	RAO
1	9/8/14	PRE-FINAL (90%) DESIGN		MBY			TPF
0	4/5/13	INTERMEDIATE (60%) DESIGN		MBY			TPF

REVISIONS

APPROVED BY	
SO	
SUPV	JMS
DSGN	MBY
DWN	MBY
CHKD	TPF
OK	JMS
DATE	
SCALES	N/A

TOPOCK GROUNDWATER REMEDIATION PROJECT
REMEDY PRODUCED WATER CONDITIONING PLANT
CONTROL PANEL BACKPAN LAYOUT
GAS TRANSMISSION & DISTRIBUTION
PACIFIC GAS AND ELECTRIC COMPANY
SAN FRANCISCO, CALIFORNIA

MICROFILM	
BILL OF MATL	
DWG LIST	
SUPSDS	
SUPSD BY	
SHEET NO.	of SHEETS
E-12-05	REV 1

FILENAME: E-12-05.dwg
PLOT DATE: Oct 29, 2015 PLOT TIME: 3:59:17pm

N1808

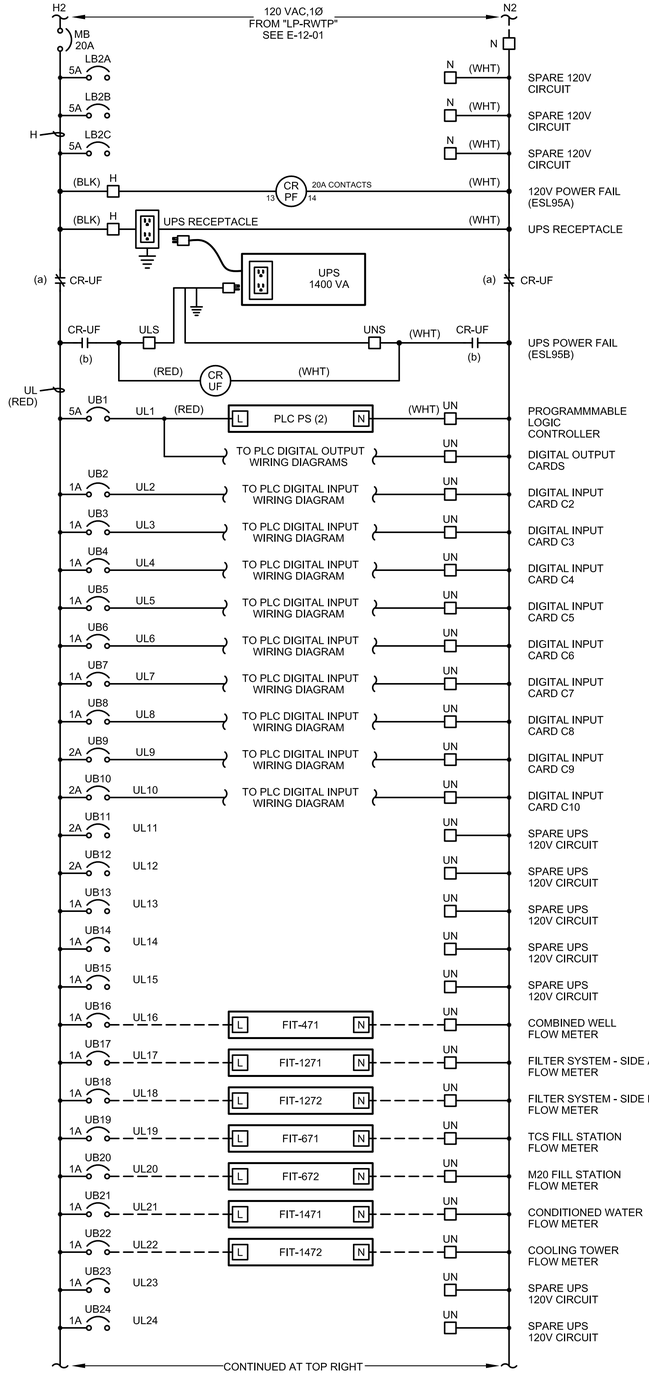

POWER DISTRIBUTION DIAGRAM

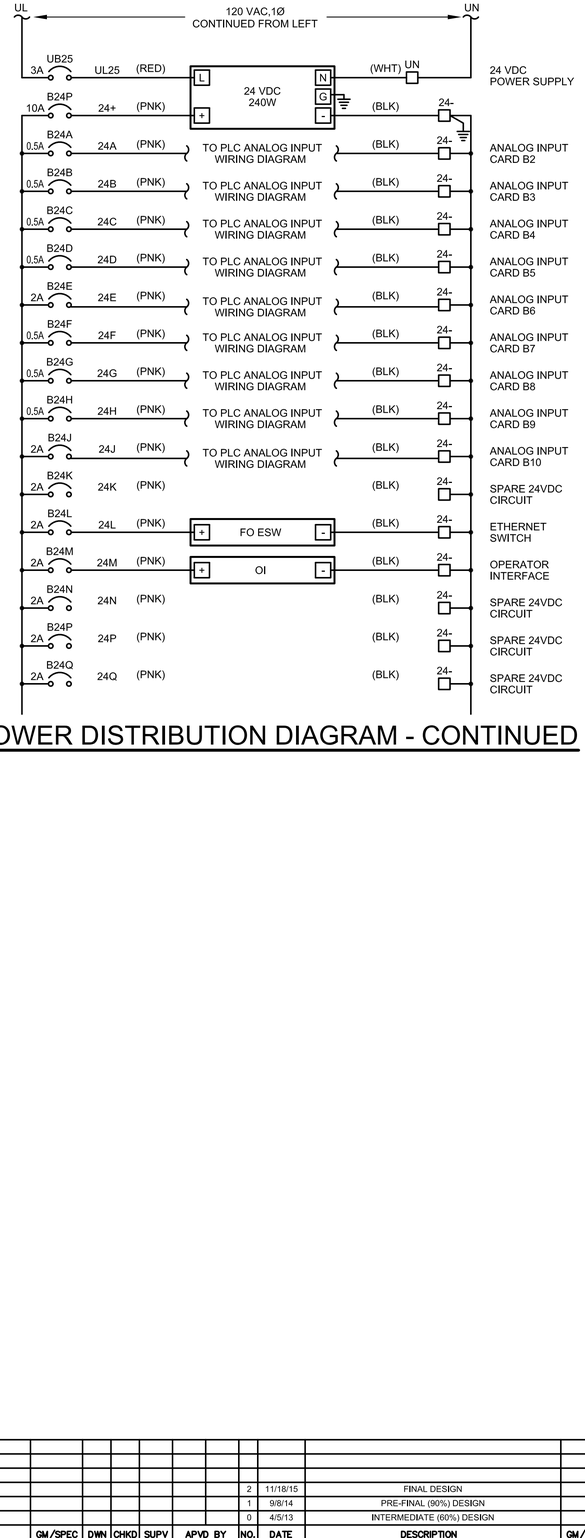

POWER DISTRIBUTION DIAGRAM - CONTINUED

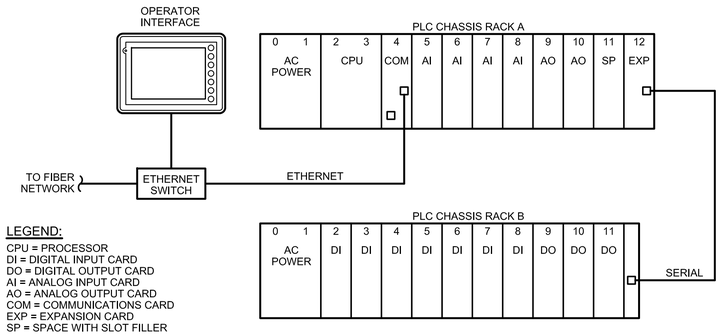

LEGEND:
CPU = PROCESSOR
DI = DIGITAL INPUT CARD
DO = DIGITAL OUTPUT CARD
AI = ANALOG INPUT CARD
AO = ANALOG OUTPUT CARD
COM = COMMUNICATIONS CARD
EXP = EXPANSION CARD
SP = SPACE WITH SLOT FILLER

PLC BLOCK DIAGRAM

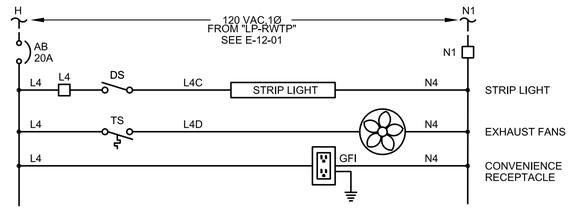

AUXILLIARY POWER DIAGRAM

- FINAL DESIGN - FOR AGENCY APPROVAL ONLY

REGISTERED PROFESSIONAL ENGINEER
JOHN M. SIDDOWAY
20532
Exp. 9-30-17
ELECTRICAL
STATE OF CALIFORNIA

FRISCH ENGINEERING, INC.
CONSULTING ELECTRICAL ENGINEERS
13405 FOLSOM BLVD, UNIT 600
FOLSOM, CA 95630
PH 916 353 1025
WWW.FRISCHENGINEERING.COM

ARCADIS

NO.	DATE	DESCRIPTION	GM/SPEC	DWN	CHKD	SUPV	APVD BY
2	11/18/15	FINAL DESIGN		MBY	TPF	JMS	RAO
1	9/8/14	PRE-FINAL (90%) DESIGN		MBY			TPF
0	4/5/13	INTERMEDIATE (60%) DESIGN		MBY			TPF

REVISIONS

APPROVED BY	
SO	
RAO	SUPV JMS
	DSGN MBY
	DWN MBY
	CHKD TPF
	OK JMS
	DATE
	SCALES N/A

TOPOCK GROUNDWATER REMEDIATION PROJECT
REMEDY PRODUCED WATER CONDITIONING PLANT POWER DISTRIBUTION DIAGRAM
GAS TRANSMISSION & DISTRIBUTION
PACIFIC GAS AND ELECTRIC COMPANY
SAN FRANCISCO, CALIFORNIA

MICROFILM	
BILL OF MATL	
DWG LIST	
SUPSDS	
SUPSD BY	
SHEET NO.	of SHEETS
E-12-06	REV 1

PLOT DATE: Oct 29, 2015 PLOT TIME: 3:59:24pm
FILENAME: E-12-06.dwg

N1808

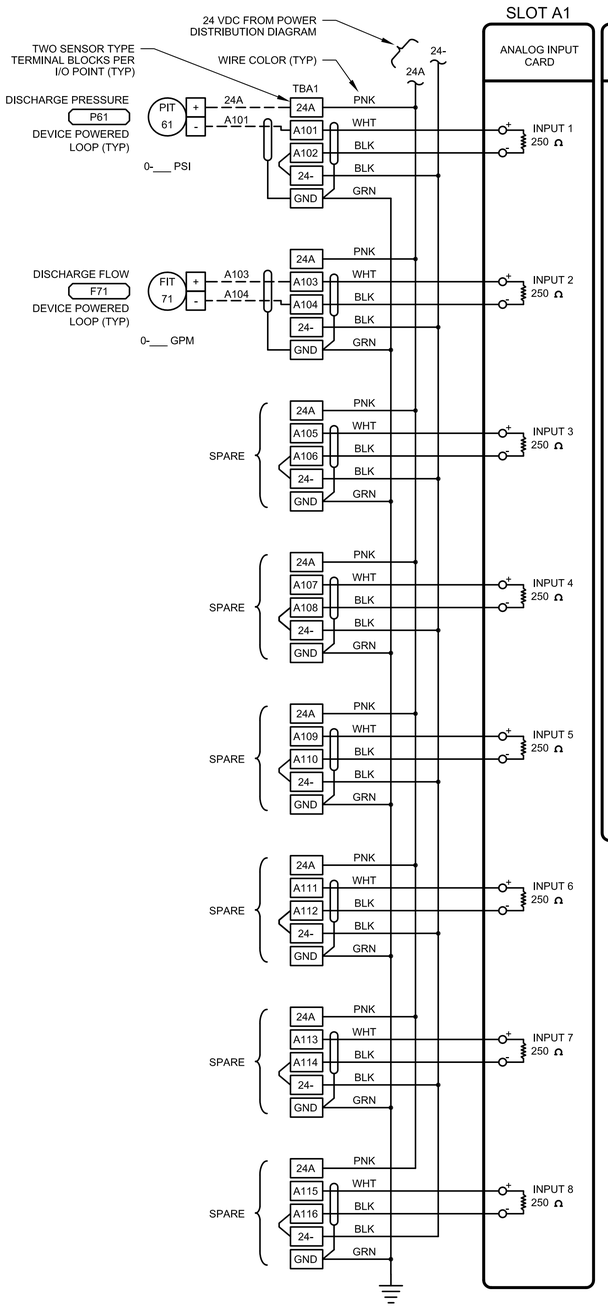

AI CARD

NOTES:
1. TWO CARDS PER DRAWING MAXIMUM.
2. USE MANUFACTURED TERMINAL BLOCK JUMPERS WHERE POSSIBLE

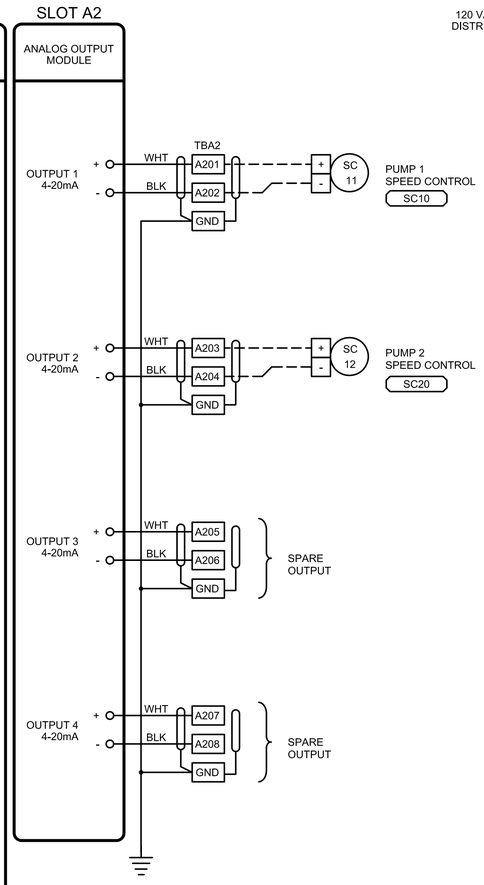

AO CARD

NOTES:
1. TWO CARDS PER DRAWING MAXIMUM.

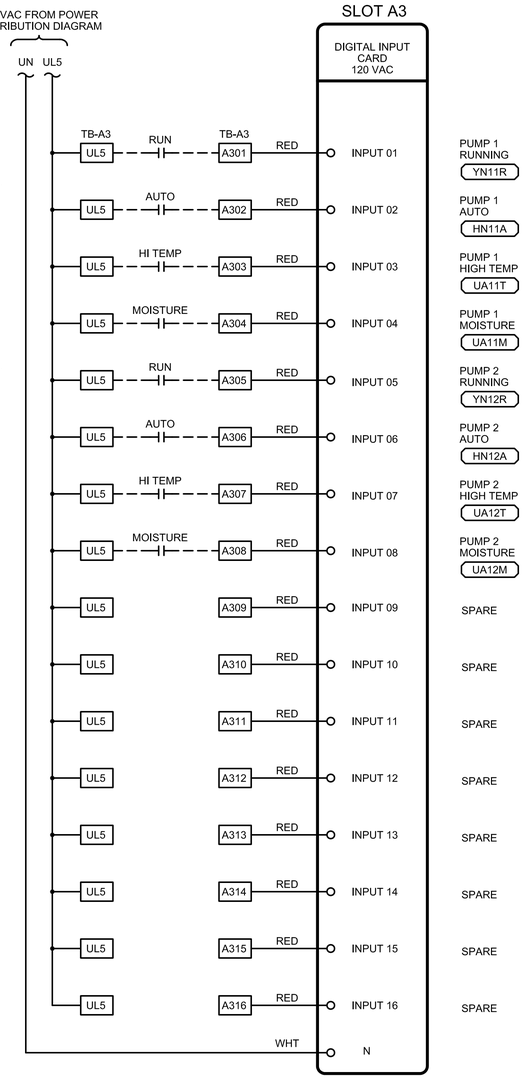

DI CARD

NOTES:
1. TWO CARDS PER DRAWING MAXIMUM.

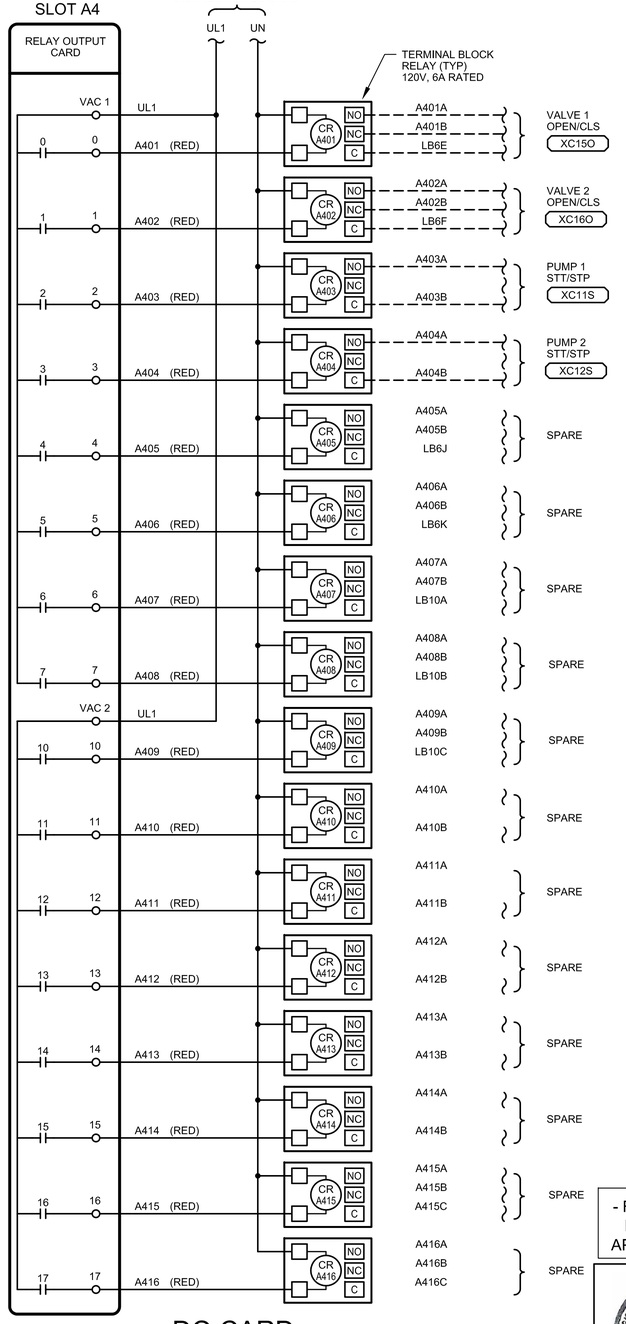

DO CARD

NOTES:
1. TWO CARDS PER DRAWING MAXIMUM.

EXAMPLE PLC I/O WIRING DIAGRAMS

NOTES:
1. WIRE SPARE I/O POINTS TO TERMINAL BLOCKS.
2. EXAMPLE I/O POINTS SHOWN. THIS DRAWING INTENDED TO SHOW I/O WIRING ONLY.
3. I/O TYPE AND NUMBER OF POINTS AND CARDS REQUIRED IS DETERMINED BY P&ID DRAWINGS.
4. MINIMUM 20% SPARE I/O POINTS PER I/O TYPE.
5. PLC I/O CARD WIRE NUMBERS SHALL BE BUILT AS SHOWN IN EXAMPLE BELOW. FIELD WIRES SHALL HAVE SAME NUMBER AS TERMINAL NUMBER.



- FINAL DESIGN - FOR AGENCY APPROVAL ONLY

REGISTERED PROFESSIONAL ENGINEER JOHN M. SIOCHI 20532 Exp. 9-30-17 ELECTRICAL STATE OF CALIFORNIA

MICROFILM

FRISCH ENGINEERING, INC.
CONSULTING ELECTRICAL ENGINEERS
13405 FOLSOM BLVD, UNIT 600
FOLSOM, CA 95630
PH 916 353 1025
WWW.FRISCHENGINEERING.COM

ARCADIS

NO.	DATE	DESCRIPTION	GM/SPEC	DWN	CHKD	SUPV	APVD BY
2	11/18/15	FINAL DESIGN		MBY	TPF	JMS	RAO
1	9/8/14	PRE-FINAL (90%) DESIGN		MBY			TPF
0	4/5/13	INTERMEDIATE (60%) DESIGN		MBY			

REVISIONS

APPROVED BY: RAO

SO	
SUPV	JMS
DSGN	MBY
DWN	MBY
CHKD	TPF
OK	JMS
DATE	
SCALES	N/A

TOPOCK GROUNDWATER REMEDIATION PROJECT
REMEDY PRODUCED WATER CONDITIONING PLANT
EXAMPLE PLC I/O WIRING DIAGRAMS
GAS TRANSMISSION & DISTRIBUTION
PACIFIC GAS AND ELECTRIC COMPANY
SAN FRANCISCO, CALIFORNIA

BILL OF MATL
DWG LIST
SUPSDS
SUPSD BY
SHEET NO. E-12-07 of SHEETS
REV 1

FILENAME: E-12-07.dwg
PLOT DATE: Oct 29, 2015
PLOT TIME: 3:59:31pm

N1808

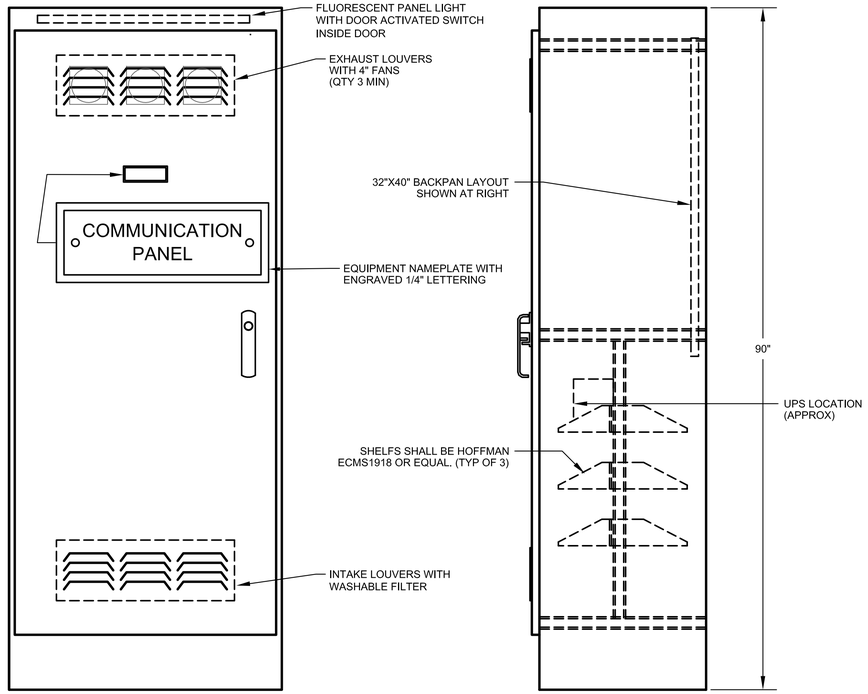

FRONT ELEVATION

SIDE ELEVATION

ELEVATION

1" = 10"

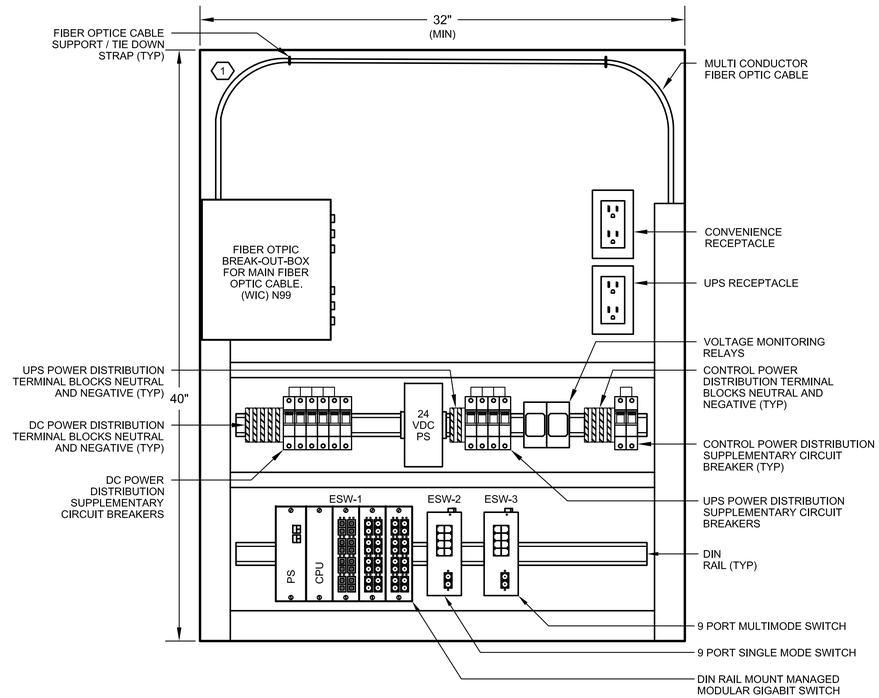

BACKPAN LAYOUT

PANEL FABRICATION METHODS

1. NEMA 3R, DUAL ACCESS.
2. OUTER DOOR SEALED WITH RUBBERIZED FOAM GASKET.
3. PANEL SHALL BE FABRICATED FROM PAINT BOND GALVANEAL SHEET STEEL.
4. 12 GAUGE EXTERIOR AND 14 GAUGE INTERIOR.
5. ALL SEAMS SHALL HAVE CONTINUOUS WELD GROUND SMOOTH.
6. DOOR TO BE PADLOCKABLE WITH HEAVY DUTY 3 POINT LATCH.
7. DOOR HINGES AND PINS SHALL BE CONTINUOUS, HEAVY DUTY.
8. NO SCREWS, RIVETS, OR BOLTS SHALL PROTRUDE EXTERNALLY.
9. INTERNAL SCREWS, RIVETS, BOLTS, AND NUTS SHALL BE MACHINE THREAD INTO TAPPED BACKPAN.
10. EXTERIOR PANEL COLOR: ANSI 61 GRAY.
11. MOUNTING PAN AND INTERIOR DOOR COLOR: WHITE.
12. FABRICATION AND WIRING SHALL CONFORM TO U.L. AND NEMA STANDARDS.
13. ALL WIRING SHALL BE PERMANENTLY LABELED WITH WIRE MARKERS ON BOTH ENDS.
14. WIRING DIAGRAMS SHALL BE PLACED IN A PLASTIC DRAWING HOLDER PERMANENTLY ATTACHED TO THE INSIDE OF THE FRONT DOOR.
15. AS - BUILT WIRING DIAGRAMS SHALL BE SHIPPED WITH EQUIPMENT.
16. HOFFMAN A903624FSDA FREE-STANDING, DUAL ACCESS OR EQUAL.

DRAWING REFERENCED NOTES:

1. OBSERVE FIBER OPTIC CABLE MINIMUM BEND RADIUS.

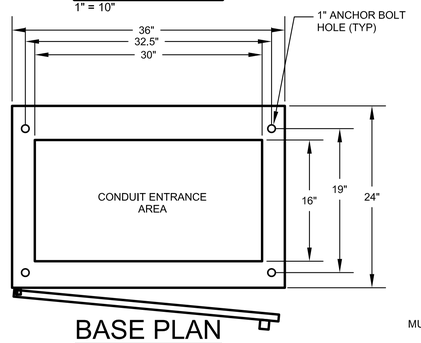

BASE PLAN

1" = 10"

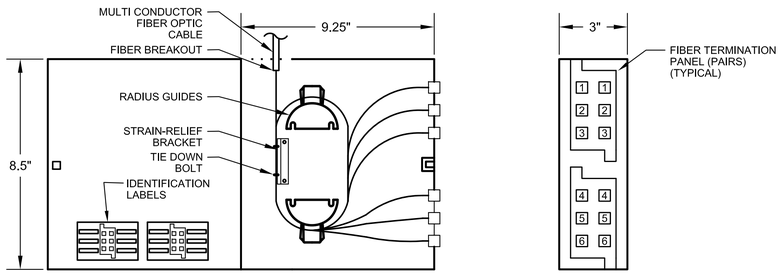

DOOR REAR ELEVATION

FRONT ELEVATION

SIDE ELEVATION

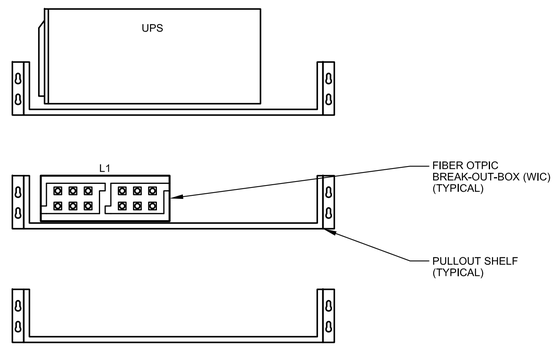

SHELF LAYOUT

1" = 10"

TYPICAL FIBER OPTIC BREAK-OUT-BOX (WIC) ELEVATION

- FINAL DESIGN - FOR AGENCY APPROVAL ONLY

REGISTERED PROFESSIONAL ENGINEER JOHN M. SIDDLE 20532 Exp. 9-30-17 ELECTRICAL STATE OF CALIFORNIA

FRISCH ENGINEERING, INC.
CONSULTING ELECTRICAL ENGINEERS
13405 FOLSOM BLVD, UNIT 600
FOLSOM, CA 95630
PH 916 353 1025
WWW.FRISCHENGINEERING.COM

ARCADIS

NO.	DATE	DESCRIPTION	GM/SPEC	DWN	CHKD	SUPV	APVD BY
2	11/18/15	FINAL DESIGN		MBY	TPF	JMS	RAO
1	9/8/14	PRE-FINAL (90%) DESIGN		MBY			TPF
0	4/5/13	INTERMEDIATE (60%) DESIGN		MBY			TPF

REVISIONS

APPROVED BY: RAO

SO	
SUPV	JMS
DSGN	MBY
DWN	MBY
CHKD	TPF
OK	JMS
DATE	
SCALES	N/A

TOPOCK GROUNDWATER REMEDIATION PROJECT
REMEDY PRODUCED WATER COMMUNICATION PANEL ELEVATION AND LAYOUT
GAS TRANSMISSION & DISTRIBUTION
PACIFIC GAS AND ELECTRIC COMPANY
SAN FRANCISCO, CALIFORNIA

MICROFILM	
BILL OF MATL	
DWG LIST	
SUPSDS	
SUPSD BY	
SHEET NO.	of SHEETS
E-12-08	REV 1

FILENAME: E-12-08.dwg
PLOT DATE: Oct 29, 2015 PLOT TIME: 3:59:38pm
N1808

LEGEND	
SYMBOL	DESCRIPTION
——·——·——	SINGLE MODE FIBER OPTIC CABLE
——··——	MULTI-MODE FIBER OPTIC CABLE
- - - - - -	10/100BASE-TX CAT5E CABLE

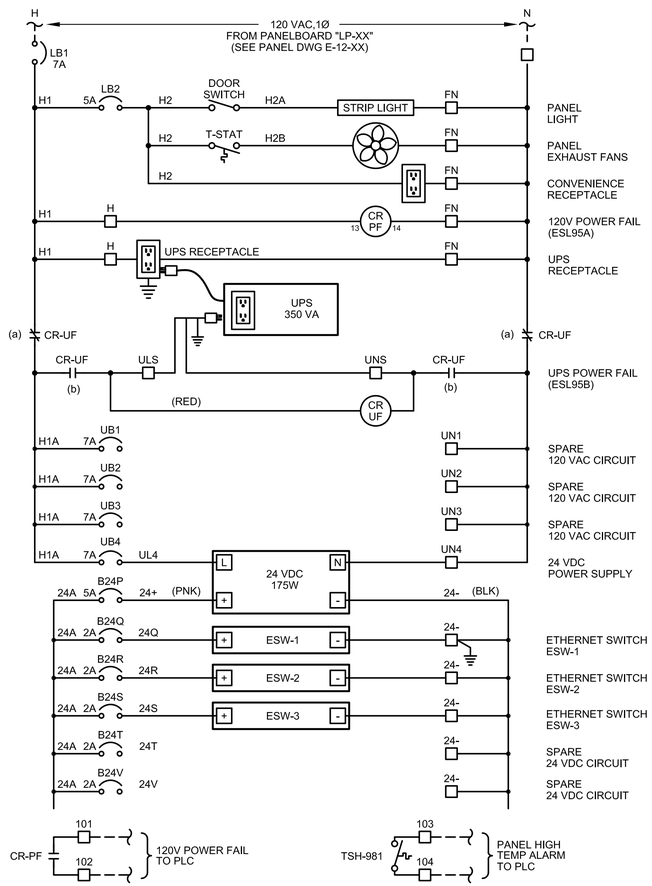

COMMUNICATIONS PANEL POWER DISTRIBUTION DIAGRAM

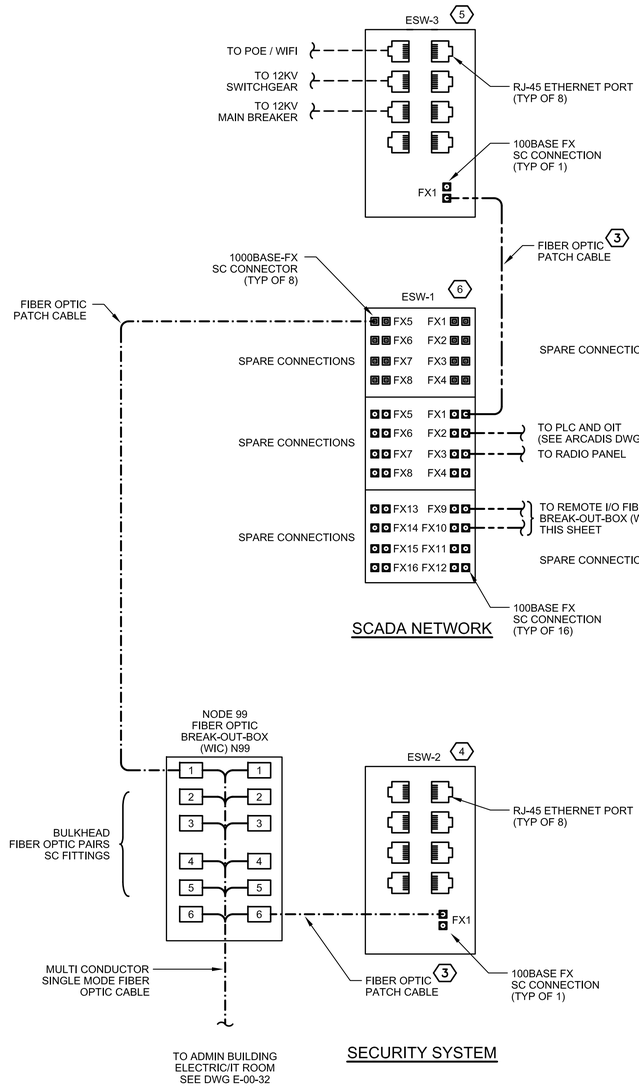

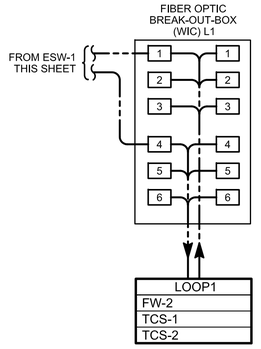

FIBER OPTIC BREAK-OUT-BOX (WIC) DIAGRAMS

FIBER OPTIC SWITCH DIAGRAM

DRAWING REFERENCED NOTES:

1. OBSERVE FIBER OPTIC CABLE MINIMUM BEND RADIUS.
2. LC CONNECTOR FOR SINGLEMODE FIBER.
3. PATCH CABLE SHALL BE COORDINATED WITH FIBER CONNECTOR AND ETHERNET SWITCH.
4. SWITCH MODEL NTRON 309FXE-N-SC-15 OR EQUIVALENT.
5. SWITCH MODEL NTRON 309FX-N-SC OR EQUIVALENT.
6. SWITCH MODEL NTRON NT24k-DR24 WITH (2)NT24k-FX8-SC AND (1) NT24K-GXE8-SC-10 OR EQUIVALENT.

- FINAL DESIGN - FOR AGENCY APPROVAL ONLY

REGISTERED PROFESSIONAL ENGINEER — JOHN M. SIDDOWAY — 20532 — Exp. 9-30-17 — ELECTRICAL — STATE OF CALIFORNIA

FRISCH ENGINEERING, INC.
CONSULTING ELECTRICAL ENGINEERS
13405 FOLSOM BLVD, UNIT 600
FOLSOM, CA 95630
PH 916 353 1025
WWW.FRISCHENGINEERING.COM

ARCADIS

NO.	DATE	DESCRIPTION	GM/SPEC	DWN	CHKD	SUPV	APVD BY
2	11/18/15	FINAL DESIGN		MBY	TPF	JMS	RAO
1	9/8/14	PRE-FINAL (90%) DESIGN		MBY			TPF
0	4/5/13	INTERMEDIATE (60%) DESIGN		MBY			TPF

REVISIONS

APPROVED BY	
RAO	

SO	
SUPV	JMS
DSGN	MBY
DWN	MBY
CHKD	TPF
OK	JMS
DATE	
SCALES	N/A

TOPOCK GROUNDWATER REMEDIATION PROJECT
REMEDY PRODUCED WATER COMMUNICATION PANEL SCHEMATIC
GAS TRANSMISSION & DISTRIBUTION
PACIFIC GAS AND ELECTRIC COMPANY
SAN FRANCISCO, CALIFORNIA

MICROFILM	
BILL OF MATL	
DWG LIST	
SUPSDS	
SUPSD BY	
SHEET NO.	of SHEETS
E-12-09	REV 1

PLOT DATE: Oct 29, 2015 PLOT TIME: 3:59:46pm
FILENAME: E-12-09.dwg

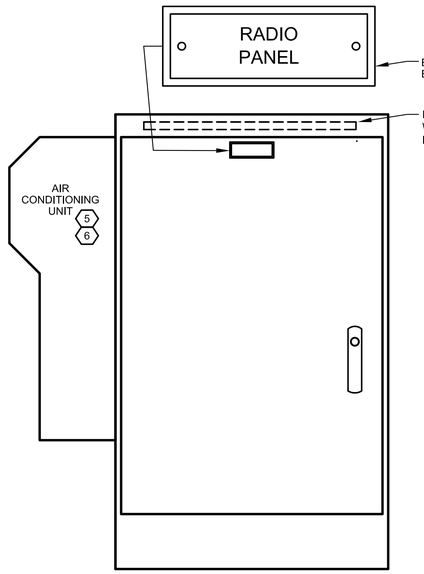

FRONT ELEVATION

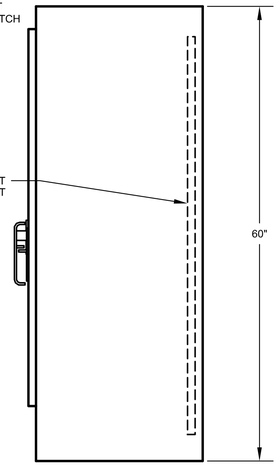

SIDE ELEVATION

ELEVATION

1" = 10"

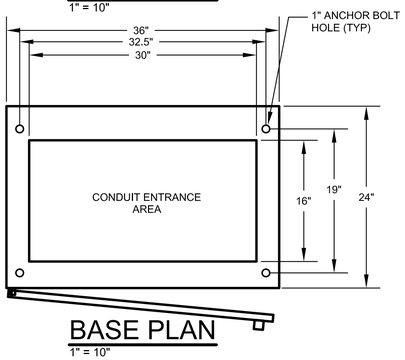

BASE PLAN

1" = 10"

PANEL FABRICATION METHODS

1. NEMA 3R, DUAL ACCESS.
2. OUTER DOOR SEALED WITH RUBBERIZED FOAM GASKET.
3. PANEL SHALL BE FABRICATED FROM PAINT BOND GALVANEAL SHEET STEEL.
4. 12 GAUGE EXTERIOR AND 14 GAUGE INTERIOR.
5. ALL SEAMS SHALL HAVE CONTINUOUS WELD GROUND SMOOTH.
6. DOOR TO BE PADLOCKABLE WITH HEAVY DUTY 3 POINT LATCH.
7. DOOR HINGES AND PINS SHALL BE CONTINUOUS, HEAVY DUTY.
8. NO SCREWS, RIVETS, OR BOLTS SHALL PROTRUDE EXTERNALLY.
9. INTERNAL SCREWS, RIVETS, BOLTS, AND NUTS SHALL BE MACHINE THREAD INTO TAPPED BACKPAN.
10. EXTERIOR PANEL COLOR: ANSI 61 GRAY.
11. MOUNTING PAN AND INTERIOR DOOR COLOR: WHITE.
12. FABRICATION AND WIRING SHALL CONFORM TO U.L. AND NEMA STANDARDS.
13. ALL WIRING SHALL BE PERMANENTLY LABELED WITH WIRE MARKERS ON BOTH ENDS.
14. WIRING DIAGRAMS SHALL BE PLACED IN A PLASTIC DRAWING HOLDER PERMANENTLY ATTACHED TO THE INSIDE OF THE FRONT DOOR.
15. AS - BUILT WIRING DIAGRAMS SHALL BE SHIPPED WITH EQUIPMENT.
16. HOFFMAN A903624FSDA FREE-STANDING, DUAL ACCESS OR EQUAL.

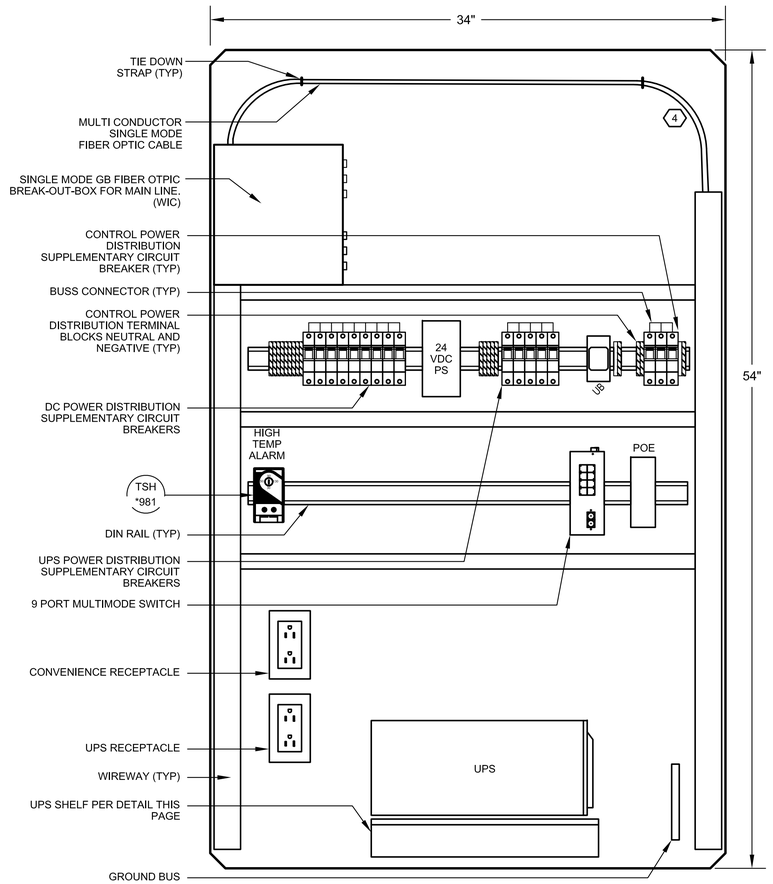

PLC PANEL BACKPAN LAYOUT (1)

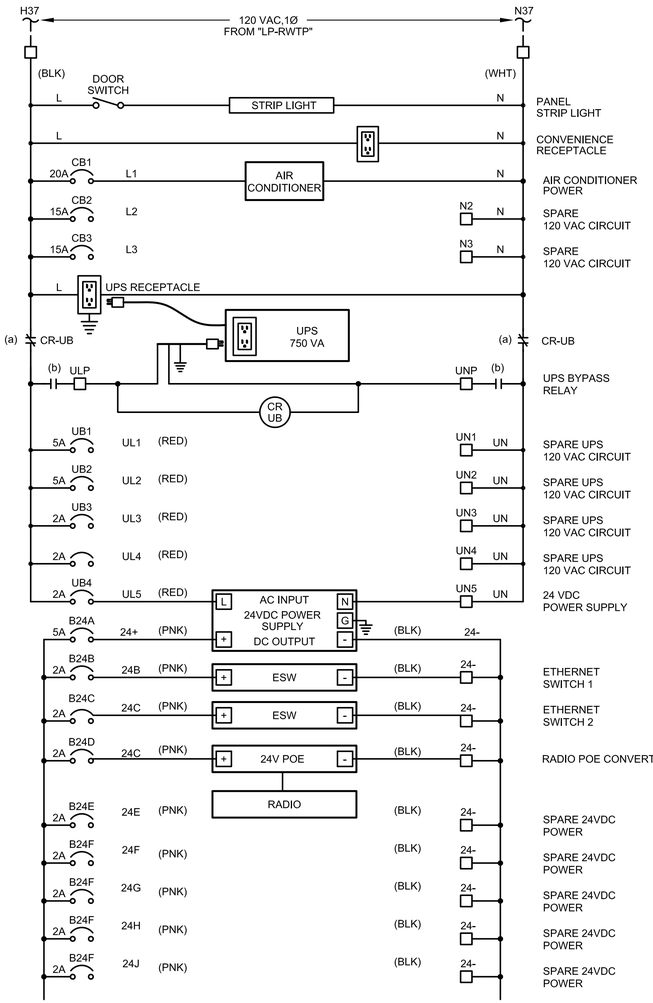

POWER DISTRIBUTION SCHEMATIC

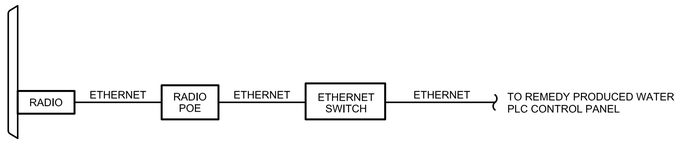

BLOCK DIAGRAM

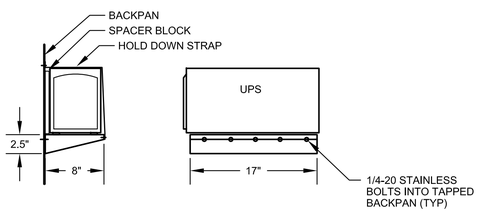

(2)(3) UPS SHELF DETAIL

SCALE: 1" = 10"

GENERAL NOTES:

1. LAYOUT REPRESENTATIVE OF MAJOR COMPONENTS ONLY. ACTUAL BACKPAN LAYOUT SHALL BE SIMILAR TO LAYOUT SHOWN. SUBMIT SCALED BACKPAN LAYOUT FOR REVIEW.
2. QUANTITY OF TERMINAL BLOCKS, FUSES, AND RELAYS SHALL BE AS DETERMINED BY I/O SCHEDULE, EXAMPLE I/O WIRING DIAGRAMS AND POWER DISTRIBUTION DIAGRAM.
3. DISTRIBUTION DIAGRAM REPRESENTATIVE OF MAJOR COMPONENTS ONLY. ADDITIONAL FUSES, CIRCUITS, AND COMPONENTS CONNECTIONS MAY BE REQUIRED FOR A FUNCTIONAL SYSTEM. ADDITIONAL WIRES, TERMINAL BLOCKS, ETC., SHALL BE LABELLED BY MANUFACTURER AND SHOWN IN THE SUBMITTAL.

DRAWING REFERENCED NOTES:

(1) RUN #12 WIRE DIRECT TO GROUND BUS. LIGHTNING ARRESTOR SHALL BE MALE/MALE TYPE.

(2) DO NOT BLOCK VENTS WITH SPACER BLOCK. USE TWO.

(3) FABRICATED FROM 14 GA (MIN) PAINTED GALVANEAL OR STAINLESS STEEL SOLID SIDES, TOP, BACK AND FRONT WITH CONTINUOUS WELDED SEAMS.

(4) OBSERVE FIBER OPTIC CABLE MINIMUM BEND RADIUS.

(5) AIR CONDITIONING SHALL BE RITTAL 3305114 OR EQUAL.

(6) AIR CONDITIONING INLET AND EXHAUST OPENING LOCATIONS PER MANUFACTURER.

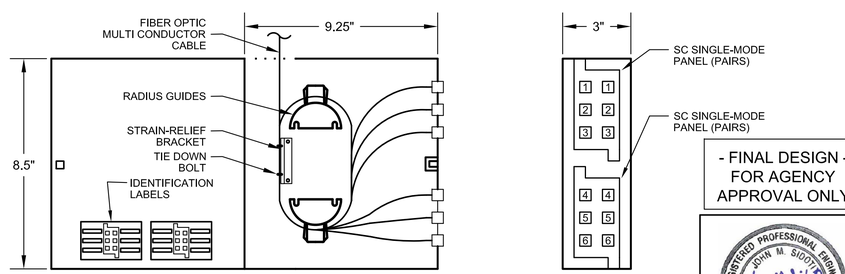

DOOR REAR ELEVATION FRONT ELEVATION SIDE ELEVATION

FIBER OPTIC BREAK-OUT-BOX (WIC) ELEVATION

- FINAL DESIGN - FOR AGENCY APPROVAL ONLY

REGISTERED PROFESSIONAL ENGINEER
JOHN M. SIDDOWAY
20532
Exp. 9-30-17
ELECTRICAL
STATE OF CALIFORNIA

FRISCH ENGINEERING, INC.
CONSULTING ELECTRICAL ENGINEERS
13405 FOLSOM BLVD, UNIT 600
FOLSOM, CA 95630
PH 916 353 1025
WWW.FRISCHENGINEERING.COM

ARCADIS

NO.	DATE	DESCRIPTION	GM/SPEC	DWN	CHKD	SUPV	APVD BY
2	11/18/15	FINAL DESIGN		MBY	TPF	JMS	RAO
1	9/8/14	PRE-FINAL (90%) DESIGN		MBY			TPF
0	4/5/13	INTERMEDIATE (60%) DESIGN		MBY			TPF

REVISIONS

APPROVED BY	
RAO	

SO	
SUPV	JMS
DSGN	MBY
DWN	MBY
CHKD	TPF
OK	JMS
DATE	
SCALES	N/A

TOPOCK GROUNDWATER REMEDIATION PROJECT
REMEDY PRODUCED WATER RADIO COMMUNICATION PANEL ELEVATION AND LAYOUT
GAS TRANSMISSION & DISTRIBUTION
PACIFIC GAS AND ELECTRIC COMPANY
SAN FRANCISCO, CALIFORNIA

MICROFILM	
BILL OF MATL	
DWG LIST	
SUPSDS	
SUPSD BY	
SHEET NO.	of SHEETS
E-12-10	REV 1

PLOT DATE: Oct 29, 2015 PLOT TIME: 3:59:52pm
FILENAME: E-12-10.dwg

N1808

PANEL "LP-RWTP-A"

LOCATION: ELECTRICAL ROOM — 120 / 208 VOLTS, 3 PHASE, 4 WIRE
ENCLOSURE: SURFACE — 225 AMP BUS
AIC RATING: 10 KAIC — 225 AMP MAIN BREAKER

BKR NO.	DESCRIPTION	LOAD VA	PHASE AMPS A	PHASE AMPS B	PHASE AMPS C	AMPS/ POLE	BKR NO.
1	INDOOR LIGHTS - CHEMICAL ROOM	1142	9.5			20/1	1
3	INDOOR LIGHTS - SEPARATOR. ROOM	1176		9.8		20/1	3
5	INDOOR LIGHTS - FILTER. ROOM	288			2.4	20/1	5
7	INDOOR LIGHTS - LAB & ELECTRICAL ROOM	800	6.7			20/1	7
9	EXTERIOR LIGHTS	800		6.7		20/1	9
11	RECEPTACLES - CHEMICAL ROOM	600			5.0	20/1	11
13	RECEPTACLES - CHEMICAL ROOM	800	6.7			20/1	13
15	RECEPTACLES - SEPARATOR. ROOM	600		5.0		20/1	15
17	RECEPTACLES - SEPARATOR. ROOM	800			6.7	20/1	17
19	RECEPTACLES - FILTER ROOM	800	6.7			20/1	19
21	RECEPTACLES - LAB	400		3.3		20/1	21
23	RECEPTACLES - LAB	800			6.7	20/1	23
25	RECEPTACLES - ELECTRICAL ROOM	200	1.7			20/1	25
27	GENERATOR CONNECTION PANEL AUX	350		2.9		20/1	27
29	INFLUENT TANK FARM SOLENOID CP 201	500			4.2	20/1	29
31	INFLUENT TANK FARM SOLENOID CP 202	500	4.2			20/1	31
33	INFLUENT TANK FARM SOLENOID CP 203	500		4.2		20/1	33
35	INFLUENT TANK FARM SOLENOID CP 204	500			4.2	20/1	35
37	TCS RADIO PANEL	1000	8.3			20/1	37
39	CONDITIONED WATER STORAGE TANK CATHODIC	300		2.5		20/1	39
41	CONDITIONED WATER STORAGE TANK ANALYZER	100			0.8	20/1	41

BKR NO.	AMPS/ POLE	PHASE AMPS A	PHASE AMPS B	PHASE AMPS C	LOAD VA	DESCRIPTION	BKR NO.
2	20/1	7.5			900	CONTROL PANEL	2
4	20/1		0.0		0	SPARE	4
6	20/1			3.3	400	DISPOSAL	6
8	20/1	10.0			1200	WATER HEATER	8
10	20/1		4.2		500	CONDITIONED WATER TANK FARM SOLENOID CP 301	10
12	20/1			4.2	500	CONDITIONED WATER TANK FARM SOLENOID CP 302	12
14	20/1	0.0			0	SPARE	14
16	20/1		8.3		1000	COMMUNICATIONS PANEL	16
18	20/1			1.7	200	COMMUNICATIONS PANEL - AUXILLARY	18
20	20/1	4.2			500	CONDITIONED WATER TANK FARM SOLENOID CP 401	20
22	20/1		4.2		500	SUMP PUMP - DECON PAD	22
24	20/1			4.2	500	SUMP PUMP - CHEMICAL ROOM	24
26	20/1	4.2			500	SUMP PUMP - SEPARATOR ROOM	26
28	20/2		9.4		1125	SUMP PUMP - INFLUENT TANK FARM	28
30				9.4	1125		30
32	20/1	12.5			1500	SUMP PUMP - CONDITIONED WATER TANK FARM	32
34	20/1		12.5		1500	FILTER PACKAGE 1	34
36	20/1			12.5	1500	FILTER PACKAGE 2	36
38	225/3	0.0			0.0	MAIN	38
40			0.0		0.0		40
42				0.0	0.0		42

PHASE	A	B	C
LEFT SIDE AMPS	43.7	34.4	29.9
LEFT SIDE KVA	5.24	4.13	3.59
TOTAL PHASE KVA	9.84	8.75	7.81
TOTAL PHASE AMPS	82.0	72.9	65.1
% OF AVERAGE	112	99	89

NEUTRAL

GROUND

A	B	C	PHASE
38.3	38.5	35.2	RIGHT SIDE AMPS
4.60	4.63	4.23	RIGHT SIDE KVA
26.41			TOTAL KVA
73.30			TOTAL AMPS @ 480V, 3P
0.80			DEMAND FACTOR
21.12			LOAD KVA

NOTES: 1 MEANS OF WIRE COLOR CODING SHALL BE POSTED ON PANELBOARD PER NEC 210 (4)
2 ASTERISK (*) DENOTES GFI BREAKER REQUIRED WITH 5 MA SENSITIVITY
3 TILDA (~) DENOTES GFI BREAKER REQUIRED WITH 30 MA SENSITIVITY

PANEL "LP-RWTP-B"

LOCATION: ELECTRICAL ROOM — 120 / 208 VOLTS, 3 PHASE, 4 WIRE
ENCLOSURE: SURFACE — 225 AMP BUS
AIC RATING: 10 KAIC — 150 AMP MAIN BREAKER

BKR NO.	DESCRIPTION	LOAD VA	PHASE AMPS A	PHASE AMPS B	PHASE AMPS C	AMPS/ POLE	BKR NO.
1	MINI-SPLIT CONDENSER HVAC 1	1500	12.5			30/2	1
3		1500		12.5			3
5	MINI-SPLIT CONDENSER HVAC 2	1500			12.5	30/2	5
7		1500	12.5				7
9	MINI-SPLIT CONDENSER HVAC 3	1500		12.5		30/2	9
11		1500			12.5		11
13	HEAT PUMP CHILLER	4000	33.3			70/2	13
15		4000		33.3			15
17	SPARE	0			0.0	20/1	17
19	SPARE	0	0.0			20/1	19
21	SPARE	0		0.0		20/1	21
23	SPARE	0			0.0	20/1	23
25	SPARE	0	0.0			20/1	25
27	SPACE	0		0.0			27
29	SPACE	0			0.0		29
31	SPACE	0	0.0				31
33	SPACE	0		0.0			33
35	SPACE	0			0.0		35
37	SPACE	0	0.0				37
39	SPACE	0		0.0			39
41	SPACE	0			0.0		41

BKR NO.	AMPS/ POLE	PHASE AMPS A	PHASE AMPS B	PHASE AMPS C	LOAD VA	DESCRIPTION	BKR NO.
2	20/1	0.0			0	SPARE	2
4	20/1		0.0		0	SPARE	4
6	20/1			0.0	0	SPARE	6
8	20/1	0.0			0	SPARE	8
10	20/1		0.0		0	SPARE	10
12	40/2			0.0	0	SPARE	12
14		0.0			0		14
16	40/2		0.0		0	SPARE	16
18				0.0	0		18
20	50/3	0.0			0	SPARE	20
22			0.0		0		22
24				0.0	0		24
26	20/1	0.0			0	SPARE	26
28			0.0		0	SPACE	28
30				0.0	0	SPACE	30
32		0.0			0	SPACE	32
34			0.0		0	SPACE	34
36				0.0	0	SPACE	36
38	150/3	0.0			0	MAIN	38
40			0.0		0		40
42				0.0	0		42

PHASE	A	B	C
LEFT SIDE AMPS	58.3	58.3	25.0
LEFT SIDE KVA	7.00	7.00	3.00
TOTAL PHASE KVA	7.00	7.00	3.00
TOTAL PHASE AMPS	58.3	58.3	25.0
% OF AVERAGE	124	124	53

NEUTRAL

GROUND

A	B	C	PHASE
0.0	0.0	0.0	RIGHT SIDE AMPS
0.00	0.00	0.00	RIGHT SIDE KVA
17.00			TOTAL KVA
47.19			TOTAL AMPS @ 480V, 3P
0.80			DEMAND FACTOR
13.60			LOAD KVA

NOTES: 1 MEANS OF WIRE COLOR CODING SHALL BE POSTED ON PANELBOARD PER NEC 210 (4)
2 ASTERISK (*) DENOTES GFI BREAKER REQUIRED WITH 5 MA SENSITIVITY
3 TILDA (~) DENOTES GFI BREAKER REQUIRED WITH 30 MA SENSITIVITY

- FINAL DESIGN - FOR AGENCY APPROVAL ONLY

REGISTERED PROFESSIONAL ENGINEER — JOHN M. SIOOTIS — 20532 — Exp. 9-30-17 — ELECTRICAL — STATE OF CALIFORNIA

FRISCH ENGINEERING, INC.
CONSULTING ELECTRICAL ENGINEERS
13405 FOLSOM BLVD, UNIT 600
FOLSOM, CA 95630
PH 916 353 1025
WWW.FRISCHENGINEERING.COM

ARCADIS

NO.	DATE	DESCRIPTION	GM/SPEC	DWN	CHKD	SUPV	APVD BY
2	11/18/15	FINAL DESIGN		MBY	TPF	JMS	RAO
1	9/8/14	PRE-FINAL (90%) DESIGN		MBY			TPF
0	4/5/13	INTERMEDIATE (60%) DESIGN		MBY			TPF

REVISIONS

APPROVED BY: RAO

SO
SUPV JMS
DSGN MBY
DWN MBY
CHKD TPF
OK JMS
DATE
SCALES N/A

TOPOCK GROUNDWATER REMEDIATION PROJECT
REMEDY PRODUCED WATER CONDITIONING PLANT
PANELBOARD SCHEDULES
GAS TRANSMISSION & DISTRIBUTION
PACIFIC GAS AND ELECTRIC COMPANY
SAN FRANCISCO, CALIFORNIA

MICROFILM
BILL OF MATL
DWG LIST
SUPSDS
SUPSD BY
SHEET NO. E-12-11 of SHEETS
REV 1

FILENAME: E-12-11.dwg
PLOT DATE: Oct 30, 2015
PLOT TIME: 11:43:58am

N1808

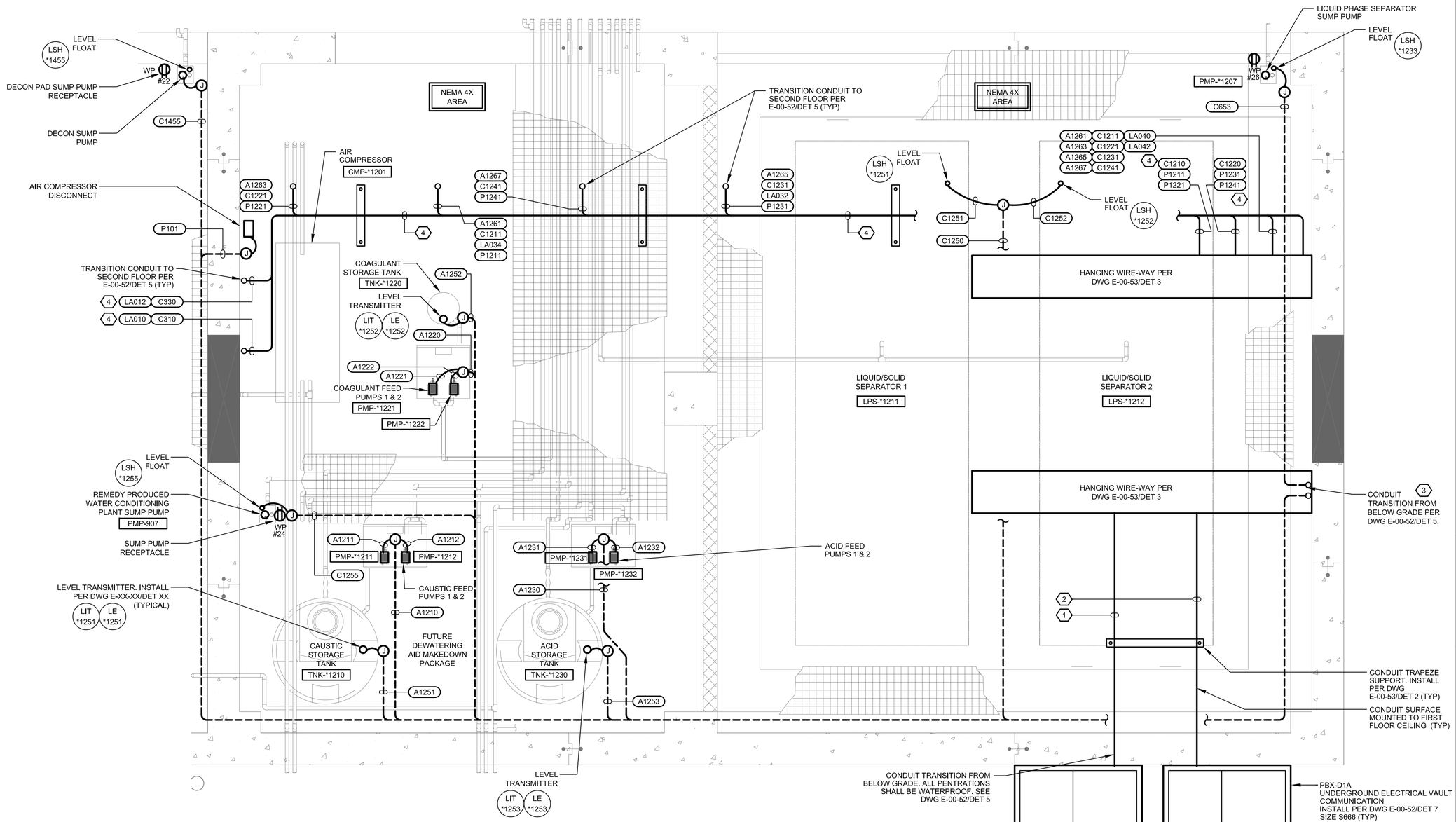

DRAWING REFERENCED NOTES:

1. DUCTBANK INCLUDES THE FOLLOWING CONDUIT:

C010	C020	C030	C070	C080
C201	C202	C203	C204	C210
C220	C230	C240	C251	C253
C255	C257	C259	C401	C410
C415	C416	C451	C453	C459
C551	LA020	LA027	LA028	LA029
LA030	LA031	LA033	LA034	LA035
LA037	LA038	LA039	LA041	P020
P030	P040B	P040A	P010A	P201A
P202A	P203A	P204A	P310A	P320A
P330A	P340A	P405A	P406A	X010
X010	X010	X010	X020	X020
X020	X020	X020	X020	X020
X020	X020	X020	X020	X020

2. DUCTBANK INCLUDES THE FOLLOWING CONDUIT:

A070	A080A	A080B	A252	A254
A256	A258	A401	A452	A454
A552	A581	D010	D011	D020
D030	F00	F08	F010	F99
X010	X010	X010	X020	X020
X020	X020	X020	X020	X020
X020	X020			

3. CONDUIT TRANSITIONS FROM BELOW GRADE TO SURFACE MOUNT VERTICALLY UP WALL TO CEILING MOUNTED JUNCTION BOX.
4. CONDUIT SURFACE MOUNTED TO FIRST FLOOR CEILING VIA TRAPEZE SUPPORT. INSTALL PER DWG E-00-53/DET 2

ELECTRICAL PLAN NOTES:

1. SEE ELECTRICAL PLAN NOTES ON DRAWING E-00-02.

0 30 60 90
SCALE: 1"=30'

FIRST FLOOR POWER AND CONTROL PLAN

- FINAL DESIGN - FOR AGENCY APPROVAL ONLY

REGISTERED PROFESSIONAL ENGINEER JOHN M. SIOTA 20532 Exp. 9-30-17 ELECTRICAL STATE OF CALIFORNIA

FRISCH ENGINEERING, INC.
CONSULTING ELECTRICAL ENGINEERS
13405 FOLSOM BLVD, UNIT 600
FOLSOM, CA 95630
PH 916 353 1025
WWW.FRISCHENGINEERING.COM

ARCADIS

NO.	DATE	DESCRIPTION	GM/SPEC	DWN	CHKD	SUPV	APVD BY
2	11/18/15	FINAL DESIGN		MBY	TPF	JMS	RAO
1	9/8/14	PRE-FINAL (90%) DESIGN		MBY			TPF
0	4/5/13	INTERMEDIATE (60%) DESIGN		MBY			TPF

REVISIONS

APPROVED BY: RAO

SO	
SUPV	JMS
DSGN	MBY
DWN	MBY
CHKD	TPF
OK	JMS
DATE	
SCALES	N/A

TOPOCK GROUNDWATER REMEDIATION PROJECT
REMEDY PRODUCED WATER CONDITIONING PLANT 1ST FLOOR POWER & CONTROL PLAN
GAS TRANSMISSION & DISTRIBUTION
PACIFIC GAS AND ELECTRIC COMPANY
SAN FRANCISCO, CALIFORNIA

MICROFILM	
BILL OF MATL	
DWG LIST	
SUPSDS	
SUPSD BY	
SHEET NO.	of SHEETS
E-12-20	REV 1

PLOT TIME: 4:00:08pm
PLOT DATE: Oct 29, 2015
FILENAME: E-12-20.dwg

N1808

GENERAL NOTES THAT APPLY TO LIGHTING AND RECEPTACLE PLAN.

1. THESE NOTES SHALL APPLY TO ALL EQUIPMENT OR FIXTURES WITH ELECTRICAL CONNECTIONS BUT WITHOUT CONDUITS SHOWN, CONDUIT NUMBERS, OR NOT LISTED IN SCHEDULE.
2. PROVIDE AND INSTALL NECESSARY WIRES IN SURFACE MOUNT 3/4" (MINIMUM) CONDUIT FOR FOR ELECTRICAL FIXTURE ARRANGEMENT AS SHOWN. MAXIMUM 3 CIRCUITS PER CONDUIT SECTION OVER 24" IN LENGTH. CONDUITS SHALL NOT EXCEED 40% FILL.
3. CONDUITS ABOVE CEILING SHALL BE EMT WITH COMPRESSION STYLE FITTINGS. CONDUITS IN COROSIVE AREAS SHALL BE GRS-PVC. CONDUITS BELOW CEILING SHALL BE GRS. ACCESS TO ATTIC AREA SHALL NOT BE REQUIRED TO INSTALL CONDUCTORS.
4. SWITCH TYPE: T= TIME SWITCH, M= MOTION DETECTOR, 3= 3-WAY OR PER SCHEDULE.
5. CONDUITS UNDER SLAB SHALL BE PVC-40 WITH STUB-OUTS PER EXPOSED CONDUIT TRANSITION DETAIL.
6. DEVICE BOXES AND CONDUIT BODIES SHALL BE STAMPED STEEL.
7. CONDUCTORS SHALL BE COPPER TYPE THHN, SOLID, #12 AWG (MINIMUM).
8. MOUNT CONDUITS USING UL LISTED STRAPS AND CLAMPS.
9. USE SS EXPANSION WEDGE ANCHORS OR WOOD SCREWS AS NECESSARY FOR EQUIPMENT MOUNTING.
10. EXPOSED CONDUIT SHALL BE PAINTED WITH WALL AND/OR CEILING.
11. PROVIDE AND INSTALL FIXTURES PER SCHEDULE THIS PAGE, QUANTITY AS SHOWN IN DRAWINGS.
12. PROVIDE AND INSTALL ALL DEVICE BOXES, JUNCTION BOXES, RECEPTACLES, SWITCHES, AND COVERS MOUNT ALL RECEPTACLES AT 48" AFF WHERE LOCATED ABOVE CABINETS AND 18" OTHERWISE.
13. RECEPTACLES TO BE GROUND FAULT INTERRUPTER (GFI) TYPE AND WEATHERPROOF (WP) WHERE SHOWN.
14. SEE ELECTRICAL SYMBOLS AND ABBREVIATIONS DRAWING FOR SYMBOL DEFINITION.
15. ALL WORK SHALL CONFORM TO LOCAL CODES AND NATIONAL ELECTRIC CODE.

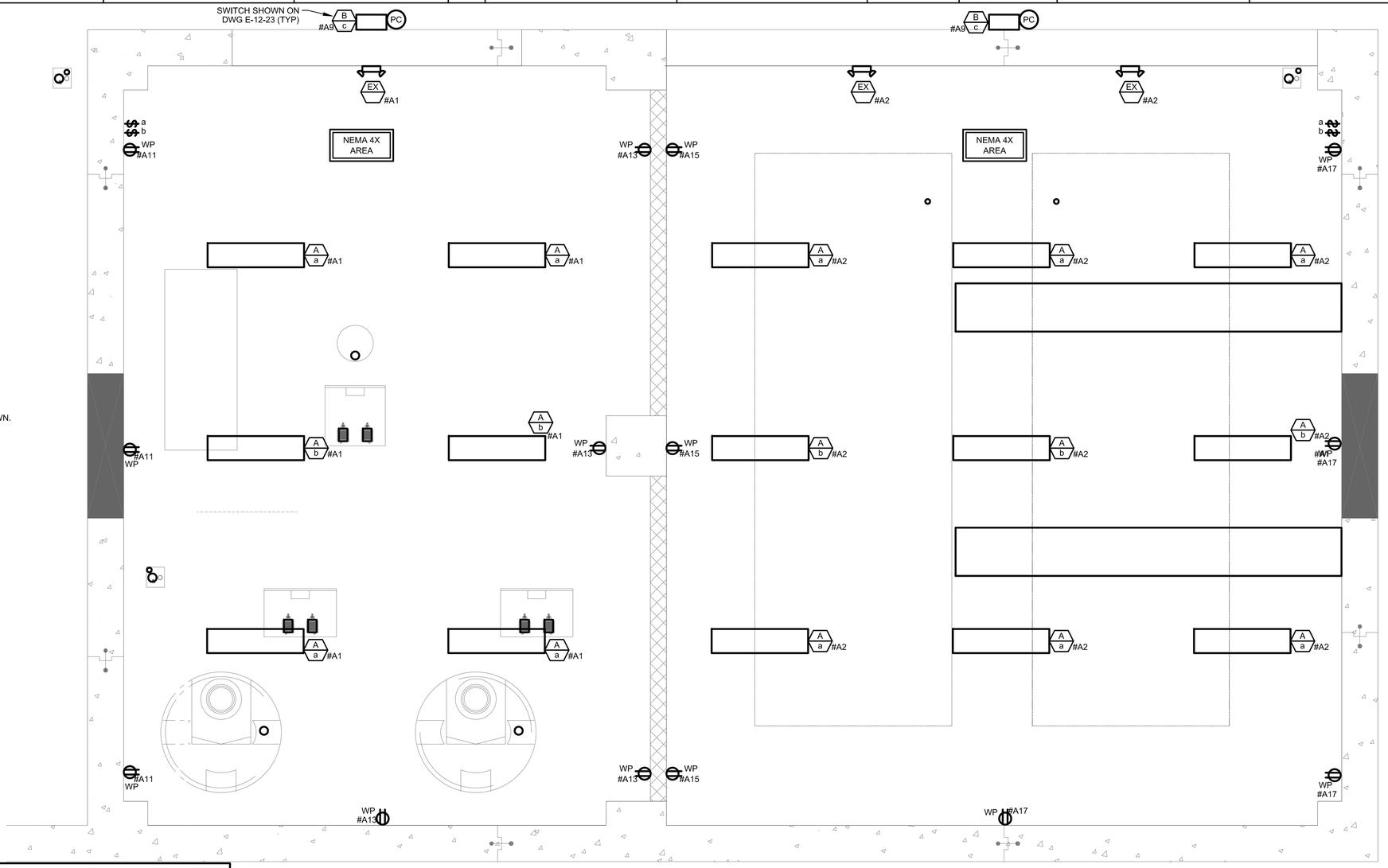

FIRST FLOOR LIGHTING AND RECEPTACLE PLAN

FIXTURE SCHEDULE

CODE LETTER	FIXTURE TYPE	FIXTURE LAMPS	WATTS/ FIXTURE	MANUFACTURER OR APPROVED EQUAL	MOUNTING ARRANGEMENT	NOTES
A	STRIP LUMINAIRE, 4 FT MOLDED FIBERGLASS POLYESTER BODY VAPORTIGHT HI IMPACT ACRYLIC LENS	59 LED 5700K	59W	LITHONIA VAP SYMMETRIC	CEILING MOUNT FIXTURE AT 8.5 FEET	UL LISTED FOR WET LOCATIONS
B	WALL PACK LIGHT, TYP 3 DISTRIBUTION DARK BRONZE POWDER COAT ALUMINUM CASE	30C LED 700 MA 5000K	67W MVOLT	LITHONIA TWP	WALL MOUNT ON BUILDING AT 12 FEET	WITH PHOTOCELL CNTRL U.L. LISTED FOR WET LOCATIONS TYPE 3 DISTRIBUTION
E	EMERGENCY LIGHT PACK WITH INTEGRAL BATTERY CHARGER THERMOPLASTIC ENCLOSURE	2 LED 3W 3.6 VOLT	6W 120 VAC	LITHONIA ELM2 LED HO	WALL MOUNT AT 7.5 FT	NICAD BATTERIES
EF-1300	12" EXHAUST FAN		1/8 HP 120 VAC 1 PHASE	PER CIVIL DWGS	WALL MOUNT	SWITCHED WITH LIGHTS
EF-1301	36" EXHAUST FAN		1/12 HP 120 VAC 1 PHASE	PER CIVIL DWGS	WALL MOUNT	SWITCHED WITH LIGHTS
EX	EMERGENCY AND EXIT LIGHT PACK WITH INTEGRAL BATTERY CHARGER THERMOPLASTIC ENCLOSURE LED LAMPS WITH RED LED SIGN	2 LED 3W 9.6 VOLT	10W 120 VAC	LITHONIA LHQM LED HO	WALL MOUNT AT 7.5 FT	NICAD BATTERIES

- FINAL DESIGN - FOR AGENCY APPROVAL ONLY

REGISTERED PROFESSIONAL ENGINEER JOHN M. SIOCHI 20532 Exp. 9-30-17 ELECTRICAL STATE OF CALIFORNIA

FRISCH ENGINEERING, INC.
CONSULTING ELECTRICAL ENGINEERS
13405 FOLSOM BLVD, UNIT 600
FOLSOM, CA 95630
PH 916 353 1025
WWW.FRISCHENGINEERING.COM

ARCADIS

NO.	DATE	DESCRIPTION	GM/SPEC	DWN	CHKD	SUPV	APVD BY
2	11/18/15	FINAL DESIGN		MBY	TPF	JMS	RAO
1	9/8/14	PRE-FINAL (90%) DESIGN		MBY			TPF
0	4/5/13	INTERMEDIATE (60%) DESIGN		MBY			TPF

REVISIONS

APPROVED BY	
RAO	

SO	
SUPV	JMS
DSGN	MBY
DWN	MBY
CHKD	TPF
OK	JMS
DATE	
SCALES	N/A

TOPOCK GROUNDWATER REMEDIATION PROJECT
REMEDY PRODUCED WATER CONDITIONING PLANT 1ST FLOOR LIGHTING AND RECEPTACLE PLAN
GAS TRANSMISSION & DISTRIBUTION
PACIFIC GAS AND ELECTRIC COMPANY
SAN FRANCISCO, CALIFORNIA

MICROFILM	
BILL OF MATL	
DWG LIST	
SUPSDS	
SUPSD BY	
SHEET NO.	of SHEETS
E-12-21	REV 1

PLOT DATE: Oct 29, 2015 PLOT TIME: 4:00:16pm
FILENAME: E-12-20.dwg

N1808

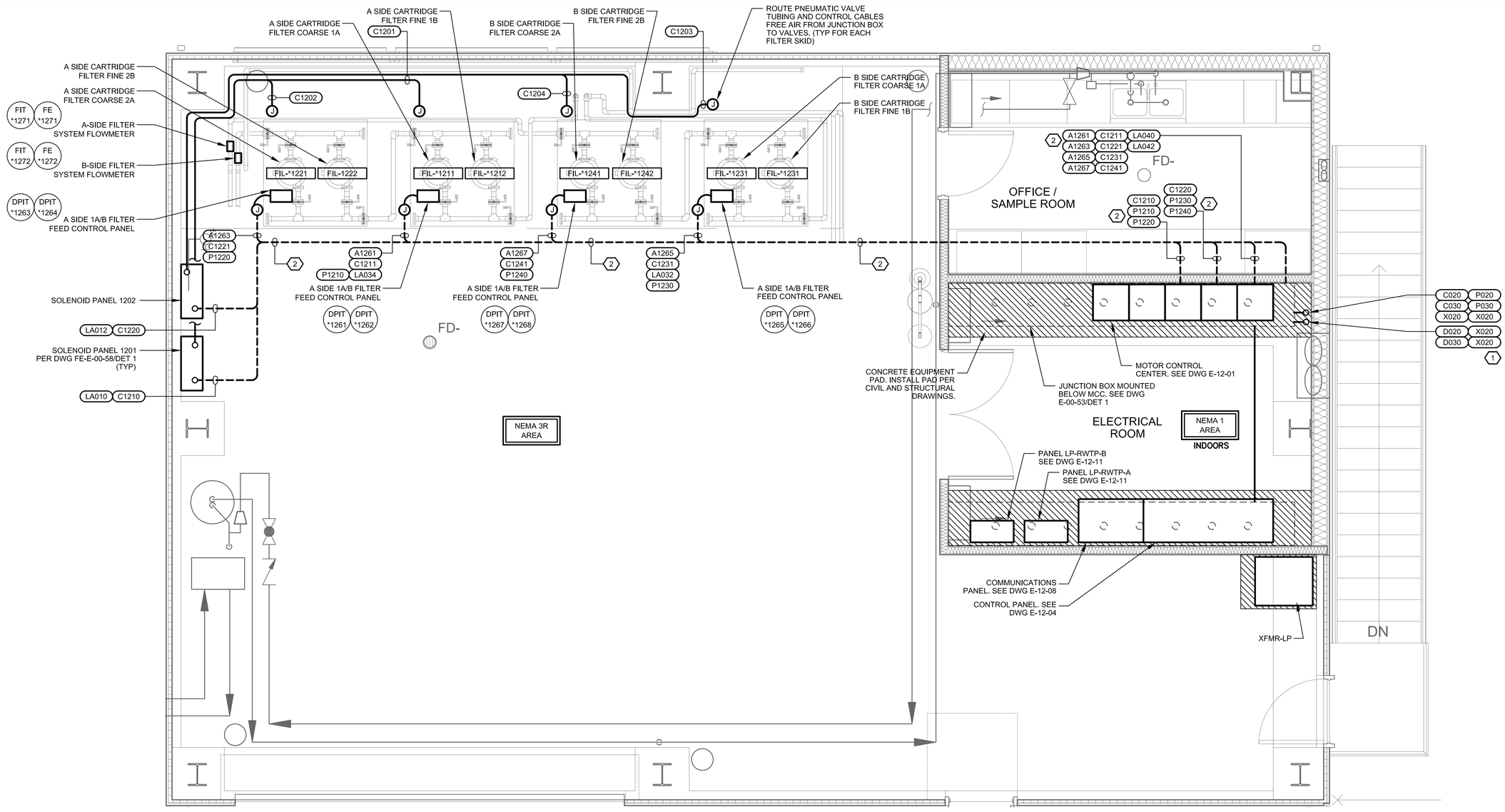

DRAWING REFERENCED NOTES:

1. CONDUITS CONTINUED ON E-12-21
2. CONDUIT SURFACE MOUNTED TO FIRST FLOOR CEILING VIA TRAPEZE SUPPORT. SEE DWG E-12-20

ELECTRICAL PLAN NOTES:

1. SEE ELECTRICAL PLAN NOTES ON DRAWING E-00-02.

0 30 60 90

SCALE: 1"=30'

SECOND FLOOR POWER AND CONTROL PLAN

- FINAL DESIGN - FOR AGENCY APPROVAL ONLY

REGISTERED PROFESSIONAL ENGINEER JOHN M. SIDOTTI 20532 Exp. 9-30-17 ELECTRICAL STATE OF CALIFORNIA

FRISCH ENGINEERING, INC.
CONSULTING ELECTRICAL ENGINEERS
13405 FOLSOM BLVD, UNIT 600
FOLSOM, CA 95630
PH 916 353 1025
WWW.FRISCHENGINEERING.COM

ARCADIS

NO.	DATE	DESCRIPTION	GM/SPEC	DWN	CHKD	SUPV	APVD BY
2	11/18/15	FINAL DESIGN		MBY	TPF	JMS	RAO
1	9/8/14	PRE-FINAL (90%) DESIGN		MBY		TPF	
0	4/5/13	INTERMEDIATE (60%) DESIGN		MBY		TPF	

REVISIONS

APPROVED BY	RAO
SO	
SUPV	JMS
DSGN	MBY
DWN	MBY
CHKD	TPF
OK	JMS
DATE	
SCALES	N/A

TOPOCK GROUNDWATER REMEDIATION PROJECT
REMEDY PRODUCED WATER CONDITIONING PLANT 2ND FLOOR POWER & CONTROL PLAN
GAS TRANSMISSION & DISTRIBUTION
PACIFIC GAS AND ELECTRIC COMPANY
SAN FRANCISCO, CALIFORNIA

MICROFILM	
BILL OF MATL	
DWG LIST	
SUPSDS	
SUPSD BY	
SHEET NO.	of SHEETS
E-12-22	REV 1

PLOT DATE: Oct 29, 2015 PLOT TIME: 4:00:35pm
FILENAME: E-12-22.dwg

N1808

GENERAL NOTES THAT APPLY TO LIGHTING AND RECEPTACLE PLAN.

1. THESE NOTES SHALL APPLY TO ALL EQUIPMENT OR FIXTURES WITH ELECTRICAL CONNECTIONS BUT WITHOUT CONDUITS SHOWN, CONDUIT NUMBERS, OR NOT LISTED IN SCHEDULE.
2. PROVIDE AND INSTALL NECESSARY WIRES IN SURFACE MOUNT 3/4" (MINIMUM) CONDUIT FOR FOR ELECTRICAL FIXTURE ARRANGEMENT AS SHOWN. MAXIMUM 3 CIRCUITS PER CONDUIT SECTION OVER 24" IN LENGTH. CONDUITS SHALL NOT EXCEED 40% FILL.
3. CONDUITS ABOVE CEILING SHALL BE EMT WITH COMPRESSION STYLE FITTINGS. CONDUITS IN COROSIVE AREAS SHALL BE GRS-PVC. CONDUITS BELOW CEILING SHALL BE GRS. ACCESS TO ATTIC AREA SHALL NOT BE REQUIRED TO INSTALL CONDUCTORS.
4. SWITCH TYPE: T= TIME SWITCH, M= MOTION DETECTOR, 3= 3-WAY OR PER SCHEDULE.
5. CONDUITS UNDER SLAB SHALL BE PVC-40 WITH STUB-OUTS PER EXPOSED CONDUIT TRANSITION DETAIL.
6. DEVICE BOXES AND CONDUIT BODIES SHALL BE STAMPED STEEL.
7. CONDUCTORS SHALL BE COPPER TYPE THHN, SOLID, #12 AWG (MINIMUM).
8. MOUNT CONDUITS USING UL LISTED STRAPS AND CLAMPS.
9. USE SS EXPANSION WEDGE ANCHORS OR WOOD SCREWS AS NECESSARY FOR EQUIPMENT MOUNTING.
10. EXPOSED CONDUIT SHALL BE PAINTED WITH WALL AND/OR CEILING.
11. PROVIDE AND INSTALL FIXTURES PER SCHEDULE ON DWG E-12-21, QUANTITY AS SHOWN IN DRAWINGS.
12. PROVIDE AND INSTALL ALL DEVICE BOXES, JUNCTION BOXES, RECEPTACLES, SWITCHES, AND COVERS MOUNT ALL RECEPTACLES AT 48" AFF WHERE LOCATED ABOVE CABINETS AND 18" OTHERWISE.
13. RECEPTACLES TO BE GROUND FAULT INTERRUPTER (GFI) TYPE AND WEATHERPROOF (WP) WHERE SHOWN.
14. SEE ELECTRICAL SYMBOLS AND ABBREVIATIONS DRAWING FOR SYMBOL DEFINITION.
15. ALL WORK SHALL CONFORM TO LOCAL CODES AND NATIONAL ELECTRIC CODE.

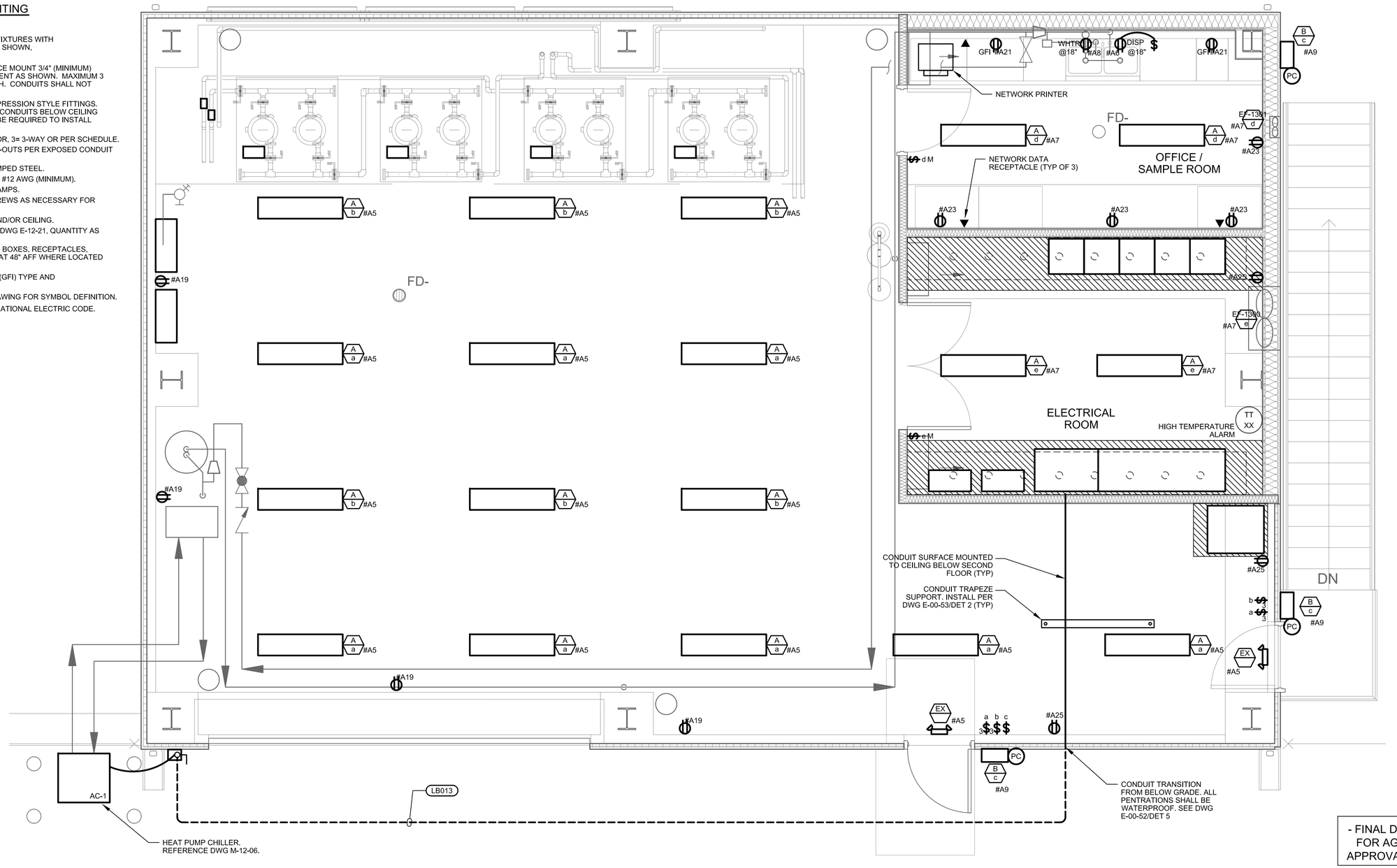

0 30 60 90

SCALE: 1"=30'

SECOND FLOOR LIGHTING AND RECEPTACLE PLAN

- FINAL DESIGN - FOR AGENCY APPROVAL ONLY

REGISTERED PROFESSIONAL ENGINEER JOHN M. SIDOTI 20532 Exp. 9-30-17 ELECTRICAL STATE OF CALIFORNIA

FRISCH ENGINEERING, INC.
CONSULTING ELECTRICAL ENGINEERS
13405 FOLSOM BLVD, UNIT 600
FOLSOM, CA 95630
PH 916 353 1025
WWW.FRISCHENGINEERING.COM

ARCADIS

NO.	DATE	DESCRIPTION	GM/SPEC	DWN	CHKD	SUPV	APVD BY
2	11/18/15	FINAL DESIGN		MBY	TPF	JMS	RAO
1	9/8/14	PRE-FINAL (90%) DESIGN		MBY			TPF
0	4/5/13	INTERMEDIATE (60%) DESIGN		MBY			TPF

REVISIONS

APPROVED BY	
RAO	SO
	SUPV JMS
	DSGN MBY
	DWN MBY
	CHKD TPF
	OK JMS
	DATE
	SCALES N/A

TOPOCK GROUNDWATER REMEDIATION PROJECT
REMEDY PRODUCED WATER CONDITIONING PLANT 2ND FLOOR LIGHTING AND RECEPTACLE PLAN
GAS TRANSMISSION & DISTRIBUTION
PACIFIC GAS AND ELECTRIC COMPANY
SAN FRANCISCO, CALIFORNIA

MICROFILM	
BILL OF MATL	
DWG LIST	
SUPSDS	
SUPSD BY	
SHEET NO.	of SHEETS
E-12-23	REV 1

PLOT DATE: Oct 29, 2015 PLOT TIME: 4:00:28pm
FILENAME: E-12-22.dwg

N1808

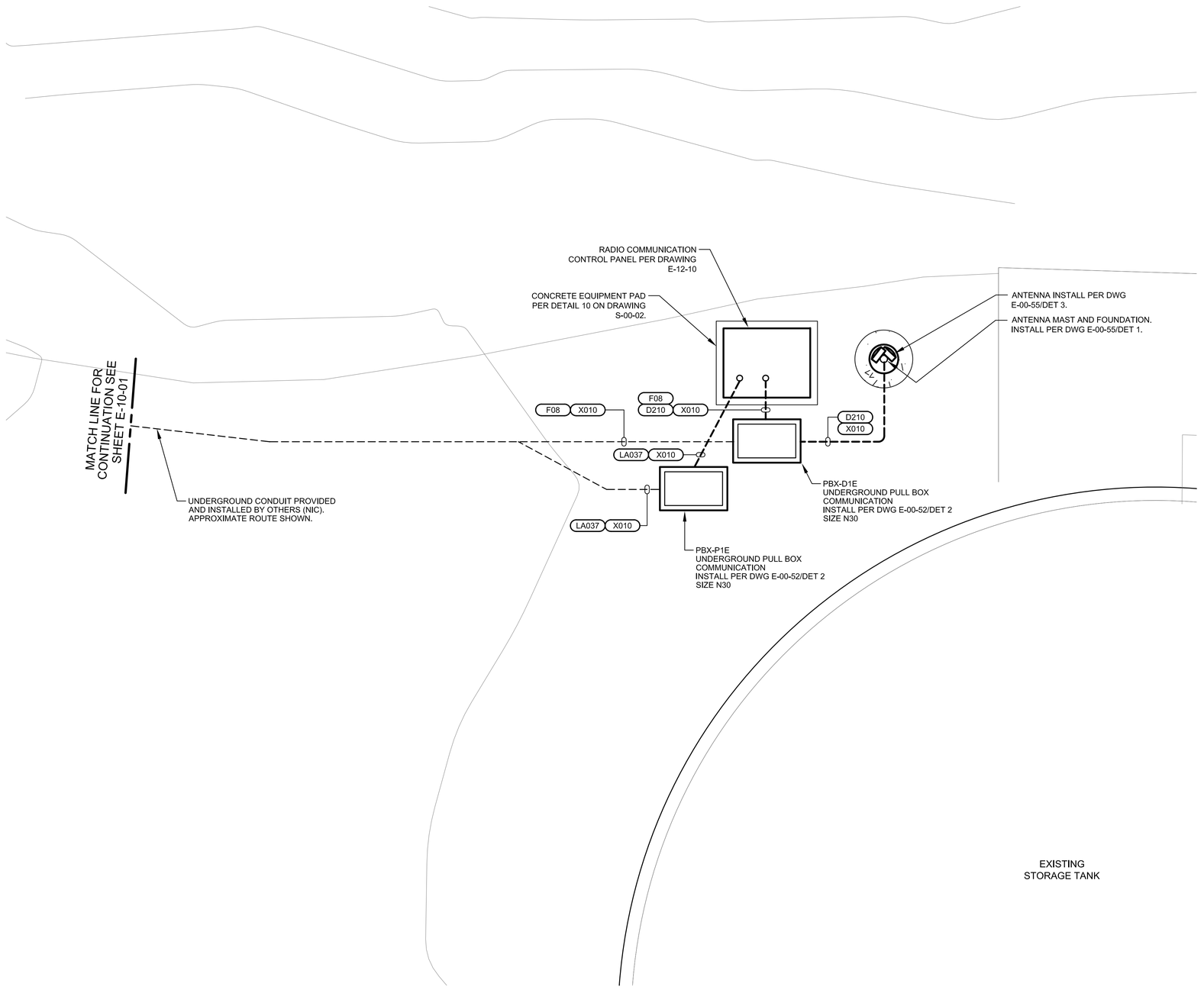

ELECTRICAL PLAN NOTES:

1. SEE ELECTRICAL PLAN NOTES ON DRAWING E-00-02.

0 2 4 6

SCALE: 1/2"=1'

EXISTING STORAGE TANK AREA PLAN

- FINAL DESIGN - FOR AGENCY APPROVAL ONLY

REGISTERED PROFESSIONAL ENGINEER JOHN M. SIOUTAS 20532 Exp. 9-30-17 ELECTRICAL STATE OF CALIFORNIA

FRISCH ENGINEERING, INC.
CONSULTING ELECTRICAL ENGINEERS
13405 FOLSOM BLVD, UNIT 600
FOLSOM, CA 95630
PH 916 353 1025
WWW.FRISCHENGINEERING.COM

ARCADIS

NO.	DATE	DESCRIPTION	GM/SPEC	DWN	CHKD	SUPV	APVD BY
2	11/18/15	FINAL DESIGN		MBY	TPF	JMS	RAO
1	9/8/14	PRE-FINAL (90%) DESIGN		MBY			TPF
0	4/5/13	INTERMEDIATE (60%) DESIGN		MBY			TPF

REVISIONS

APPROVED BY: RAO

SO
SUPV JMS
DSGN MBY
DWN MBY
CHKD TPF
OK JMS
DATE
SCALES N/A

TOPOCK GROUNDWATER REMEDIATION PROJECT
TCS EXISTING WATER STORAGE TANK AREA PLAN
GAS TRANSMISSION & DISTRIBUTION
PACIFIC GAS AND ELECTRIC COMPANY
SAN FRANCISCO, CALIFORNIA

MICROFILM
BILL OF MATL
DWG LIST
SUPSDS
SUPSD BY
SHEET NO. E-12-24 of SHEETS
REV 1

FILENAME: E-12-24.dwg
PLOT DATE: Oct 29, 2015
PLOT TIME: 4:04:29pm

N1808

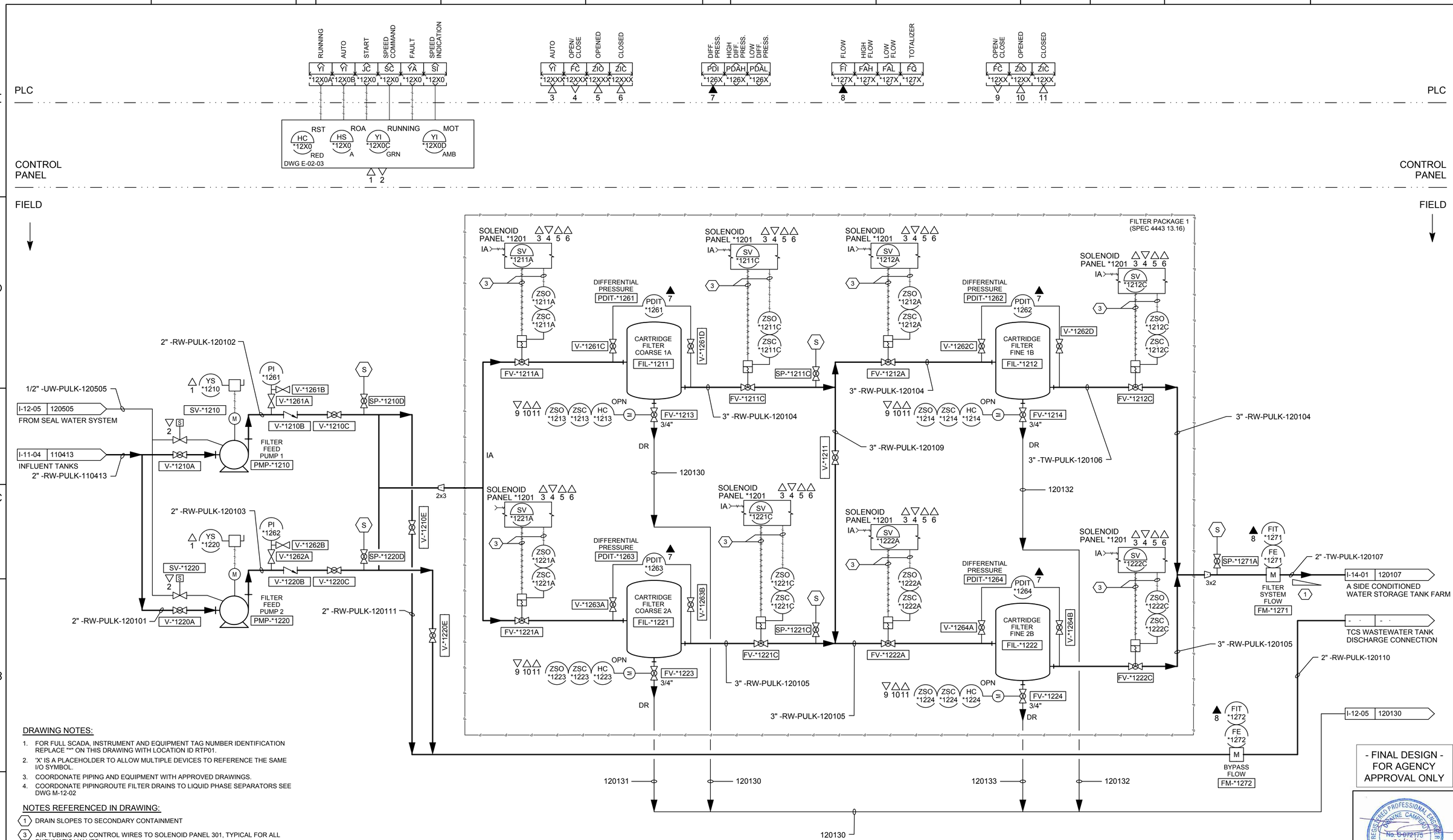

DRAWING NOTES:

1. FOR FULL SCADA, INSTRUMENT AND EQUIPMENT TAG NUMBER IDENTIFICATION REPLACE "*" ON THIS DRAWING WITH LOCATION ID RTP01.
2. 'X' IS A PLACEHOLDER TO ALLOW MULTIPLE DEVICES TO REFERENCE THE SAME I/O SYMBOL.
3. COORDONATE PIPING AND EQUIPMENT WITH APPROVED DRAWINGS.
4. COORDONATE PIPINGROUTE FILTER DRAINS TO LIQUID PHASE SEPARATORS SEE DWG M-12-02

NOTES REFERENCED IN DRAWING:

1. DRAIN SLOPES TO SECONDARY CONTAINMENT
3. AIR TUBING AND CONTROL WIRES TO SOLENOID PANEL 301, TYPICAL FOR ALL PNEUMATIC VALVES.

- FINAL DESIGN - FOR AGENCY APPROVAL ONLY

REGISTERED PROFESSIONAL ENGINEER JOHNNE CAMPEAU No. C 072176 Exp 06/30/16 CIVIL STATE OF CALIFORNIA

ETIC ENGINEERING

ARCADIS

NO.	DATE	DESCRIPTION	GM/SPEC	DWN	CHKD	SUPV	APVD BY
2	11/18/15	FINAL DESIGN		AJW	JPB	DAC	RAO
1	9/8/14	PRE-FINAL (90%) DESIGN		MBY			TPF
0	4/5/13	INTERMEDIATE (60%) DESIGN		MBY			TPF

REVISIONS

APPROVED BY	
RAO	SO
	SUPV
	DSGN
	DWN
	CHKD
	OK
	DATE
	SCALES

TOPOCK GROUNDWATER REMEDIATION PROJECT

P&ID
FILTER SYSTEM A SIDE

GAS TRANSMISSION & DISTRIBUTION
PACIFIC GAS AND ELECTRIC COMPANY
SAN FRANCISCO, CALIFORNIA

MICROFILM	
BILL OF MATL	
DWG LIST	
SUPSDS	
SUPSD BY	
SHEET NO.	of SHEETS
I-12-01	REV 2

N1808

11/03/2015, 17:24, G:\Graphics\ART\TOPOCK-01\Submittal_100%\DWGs\I-Instrumentation\I-12-01.dwg, Tab: I-12-01

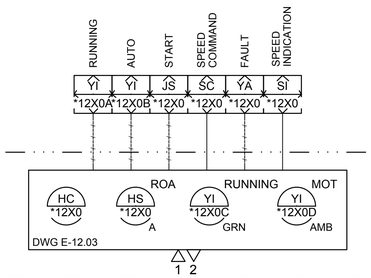

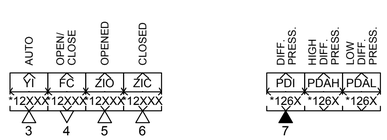

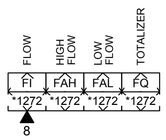

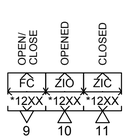

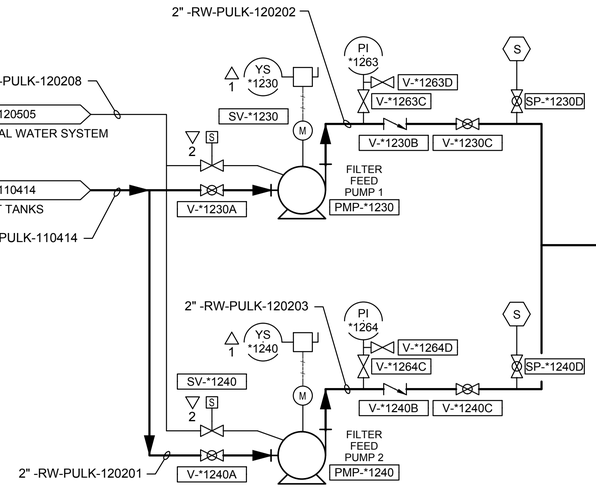

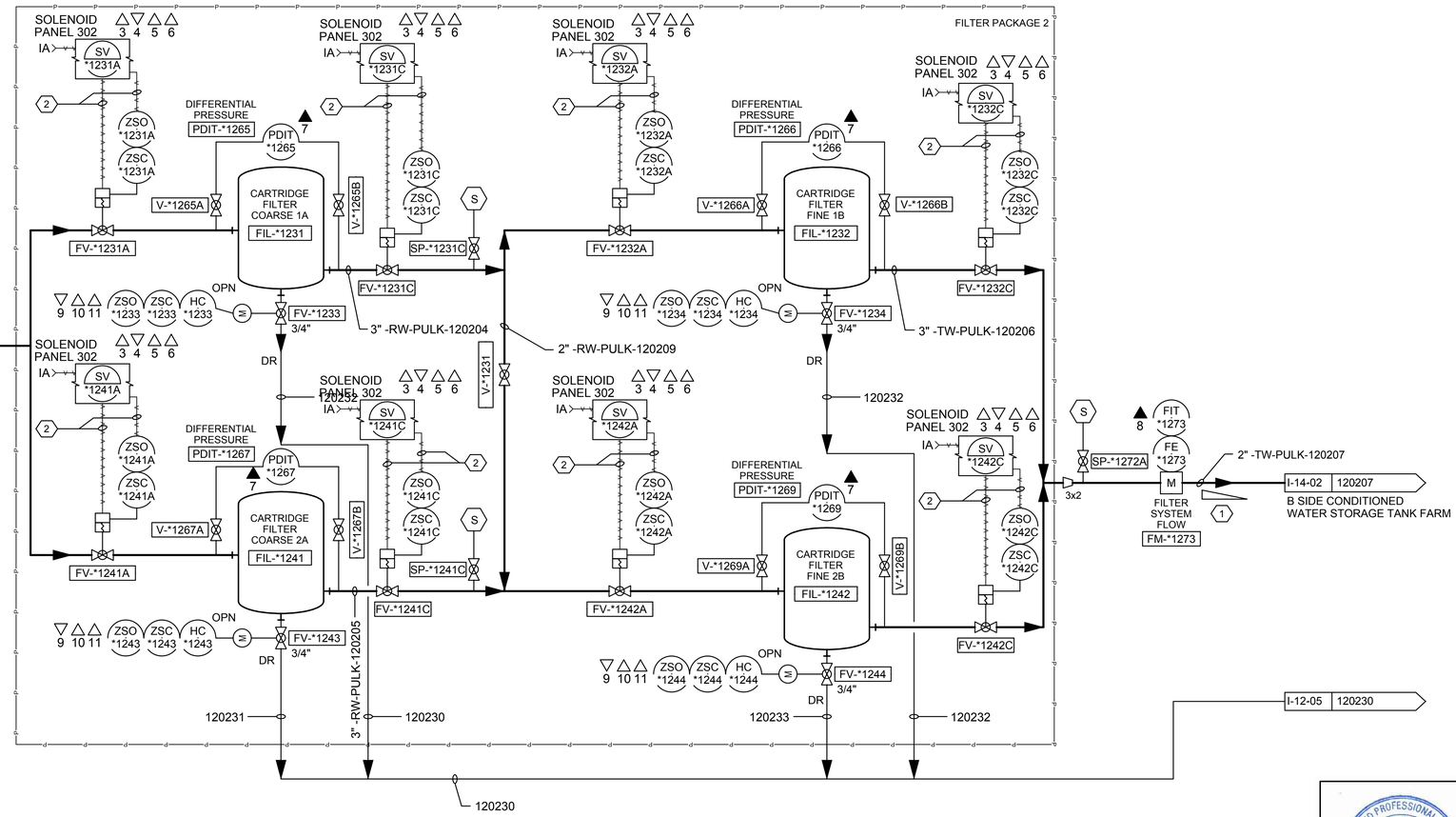

DRAWING NOTES:

1. FOR FULL SCADA, INSTRUMENT AND EQUIPMENT TAG NUMBER IDENTIFICATION REPLACE *** ON THIS DRAWING WITH LOCATION ID RTP01.
2. 'X' IS A PLACEHOLDER TO ALLOW MULTIPLE DEVICES TO REFERENCE THE SAME I/O SYMBOL.
3. COORDONATE PIPING AND EQUIPMENT WITH APPROVED DRAWINGS.
4. COORDONATE PIPINGROUTE FILTER DRAINS TO LIQUID PHASE SEPARATORS SEE DWG M-12-02

NOTES REFERENCED IN DRAWING:

1. DRAIN SLOPES TO SECONDARY CONTAINMENT
2. AIR TUBING AND CONTROL WIRES TO SOLENOID PANEL 302, TYPICAL FOR ALL PNEUMATIC VALVES.

- FINAL DESIGN -
FOR AGENCY APPROVAL ONLY

REGISTERED PROFESSIONAL ENGINEER DWAYNE CAMPBELL No. C 67217 Exp 06/30/16 CIVIL STATE OF CALIFORNIA

ETIC ENGINEERING

ARCADIS

NO.	DATE	DESCRIPTION	GM/SPEC	DWN	CHKD	SUPV	APVD BY
2	11/18/15	FINAL DESIGN		AJW	JPB	DAC	RAO
1	9/8/14	PRE-FINAL (90%) DESIGN		MBY			TPF
0	4/5/13	INTERMEDIATE (60%) DESIGN		MBY			TPF

REVISIONS

APPROVED BY	
RAO	SO
	SUPV
	DSGN
	DWN
	CHKD
	OK
	DATE
	SCALES

TOPOCK GROUNDWATER REMEDIATION PROJECT

P&ID
FILTER SYSTEM B SIDE

GAS TRANSMISSION & DISTRIBUTION
PACIFIC GAS AND ELECTRIC COMPANY
SAN FRANCISCO, CALIFORNIA

MICROFILM	
BILL OF MATL	
DWG LIST	
SUPSDS	
SUPSD BY	
SHEET NO. of SHEETS	
I-12-02	REV 2

N1808

11/03/2015, 17:24, G:\Graphics\ARITOPOCK-011Submittal_100%\DWGs\I-Instrumentation\I-12-02.dwg, Tab: I-12-02

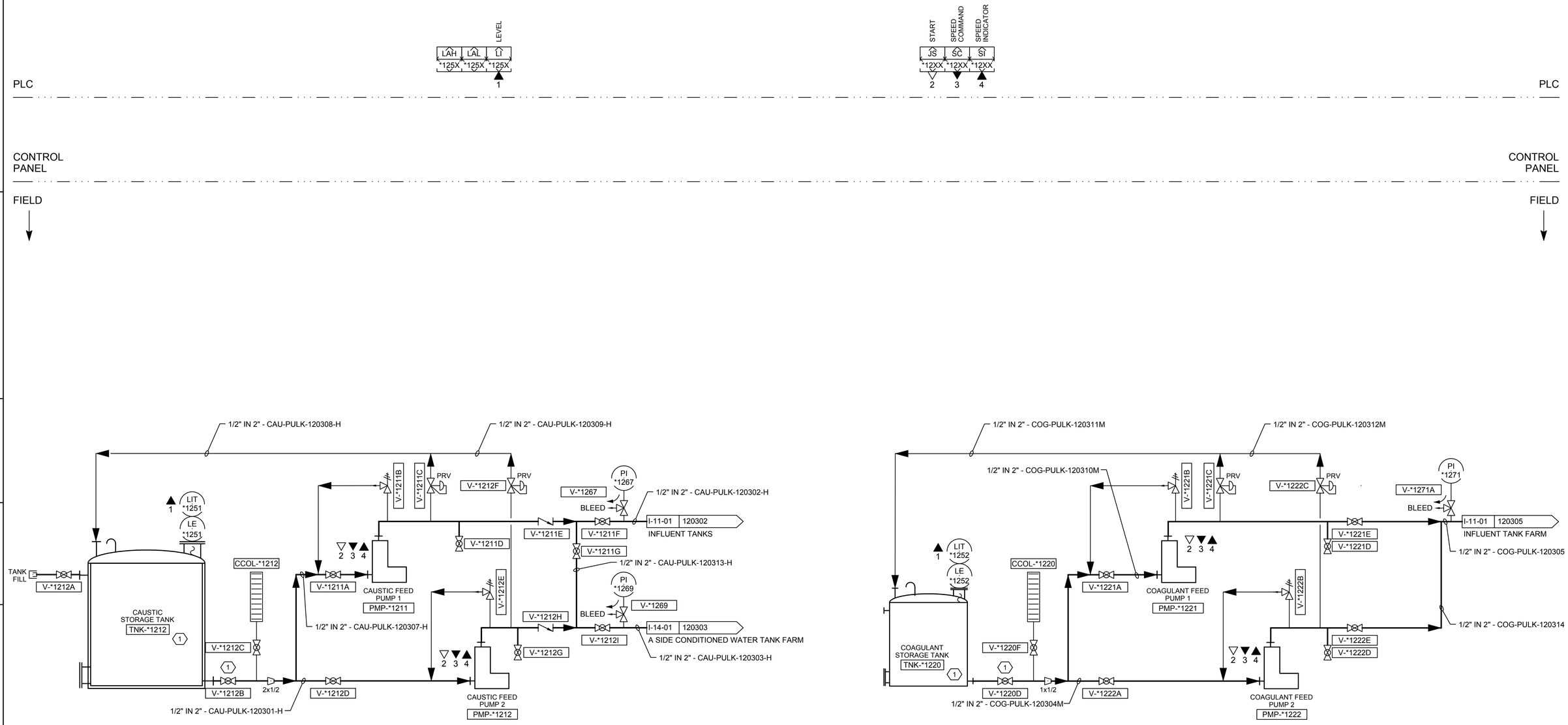

CAUSTIC SYSTEM

COAGULANT SYSTEM

NOTES:

1. FOR FULL SCADA, INSTRUMENT AND EQUIPMENT TAG NUMBER IDENTIFICATION REPLACE "*" ON THIS DRAWING WITH LOCATION ID RTP01.
2. 'X' IS A PLACEHOLDER TO ALLOW MULTIPLE DEVICES TO REFERENCE THE SAME I/O SYMBOL.

NOTES REFERENCED IN DRAWING:

1. TANKS AND LINES ARE HEAT TRACED AND DOUBLE-CONTAINED.

- FINAL DESIGN - FOR AGENCY APPROVAL ONLY

REGISTERED PROFESSIONAL ENGINEER DWAYNE CAMPBELL No. C 072175 Exp 06/30/16 CIVIL STATE OF CALIFORNIA

ETIC ENGINEERING

ARCADIS

NO.	DATE	DESCRIPTION	GM/SPEC	DWN	CHKD	SUPV	APVD BY
2	11/18/15	FINAL DESIGN		AJW	JPB	DAC	RAO
1	9/8/14	PRE-FINAL (90%) DESIGN		MBY			TPF
0	4/5/13	INTERMEDIATE (60%) DESIGN		MBY			TPF

REVISIONS

APPROVED BY	
RAO	SO
	SUPV
	DSGN
	DWN
	CHKD
	OK
	DATE
	SCALES

TOPOCK GROUNDWATER REMEDIATION PROJECT

P&ID CAUSTIC AND COAGULANT SYSTEM

GAS TRANSMISSION & DISTRIBUTION

PACIFIC GAS AND ELECTRIC COMPANY

SAN FRANCISCO, CALIFORNIA

MICROFILM	
BILL OF MATL	
DWG LIST	
SUPSDS	
SUPSD BY	
SHEET NO.	of SHEETS
I-12-03	REV 2

N1808

11/03/2015, 17:25, G:\Graphics\ART\TOPOCK-011\Submittal_100%\DWGs\I-Instrumentation\I-12-03.dwg, Tab: I-12-03

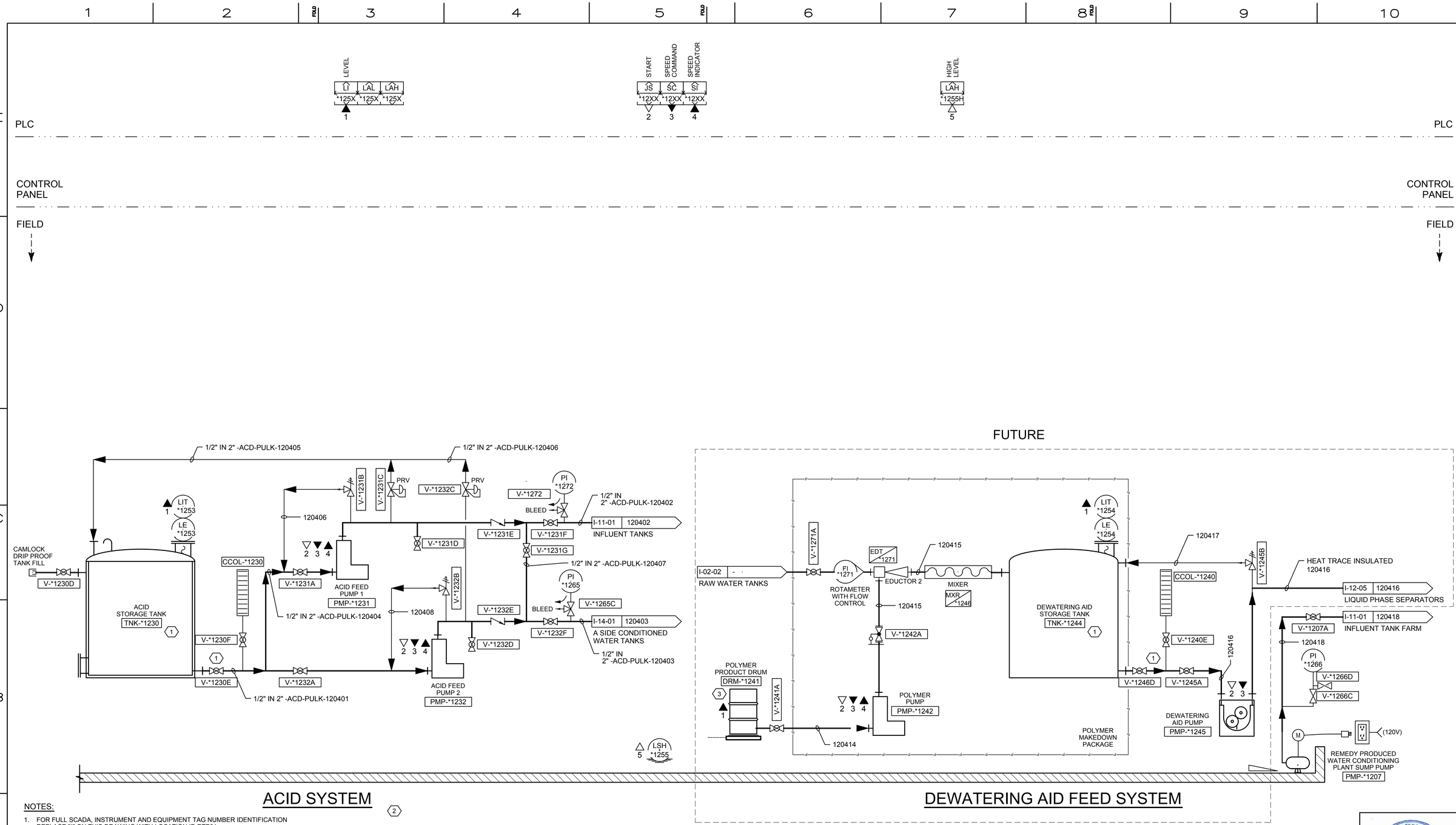

NOTES:

1. FOR FULL SCADA, INSTRUMENT AND EQUIPMENT TAG NUMBER IDENTIFICATION REPLACE "*" ON THIS DRAWING WITH LOCATION ID RTP01.
2. 'X' IS A PLACEHOLDER TO ALLOW MULTIPLE DEVICES TO REFERENCE THE SAME I/O SYMBOL.

NOTES REFERENCED IN DRAWING:

1. TANKS AND LINES ARE HEAT TRACED AND DOUBLE-CONTAINED.
2. CLEANING & WATER CONDITIONING REAGANT CONTAINERS ARE FUTURE AND NOT SHOWN HERE.
3. INSULATE DRUM AND HEAT TRACE TUBING CONNECTING PUMP ON FEEDER PACKAGE.

- FINAL DESIGN -
FOR AGENCY APPROVAL ONLY

REGISTERED PROFESSIONAL ENGINEER
DIANNE CAMPBELL
No. E 07275
Exp 06/30/16
CIVIL
STATE OF CALIFORNIA

ETIC ENGINEERING

ARCADIS

NO.	DATE	DESCRIPTION	GM/SPEC	DWN	CHKD	SUPV	APVD BY
2	11/18/15	FINAL DESIGN		AJW	JPB	DAC	RAO
1	9/8/14	PRE-FINAL (90%) DESIGN		MBY			TPF
0	4/5/13	INTERMEDIATE (60%) DESIGN		MBY			TPF

REVISIONS

APPROVED BY	
RAO	SO
	SUPV
	DSGN
	DWN
	CHKD
	OK
	DATE
	SCALES

TOPOCK GROUNDWATER REMEDIATION PROJECT

P&ID
ACID AND DEWATERING AID SYSTEMS

GAS TRANSMISSION & DISTRIBUTION
PACIFIC GAS AND ELECTRIC COMPANY
SAN FRANCISCO, CALIFORNIA

MICROFILM	
BILL OF MATL	
DWG LIST	
SUPSDS	
SUPSD BY	
SHEET NO.	of SHEETS
I-12-04	REV 2

N1808

11/03/2015, 17:25, G:\Graphics\ART\TOPOCK-011\Submittal_100%\DWGs\I-Instrumentation\I-12-04.dwg, Tab: I-12-04

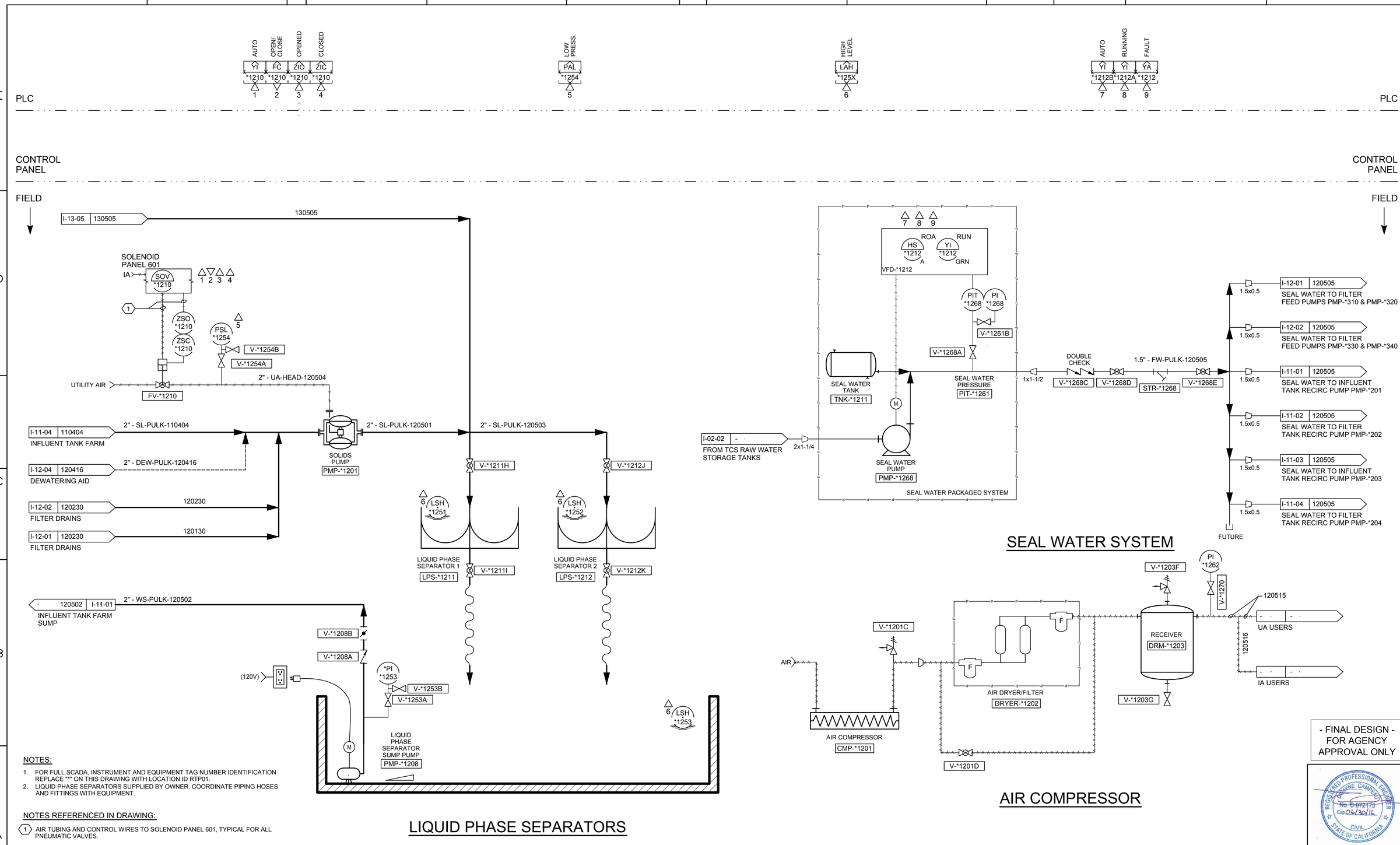

NOTES:

1. FOR FULL SCADA, INSTRUMENT AND EQUIPMENT TAG NUMBER IDENTIFICATION REPLACE *** ON THIS DRAWING WITH LOCATION ID RTP01.
2. LIQUID PHASE SEPARATORS SUPPLIED BY OWNER. COORDINATE PIPING HOSES AND FITTINGS WITH EQUIPMENT.

NOTES REFERENCED IN DRAWING:

1. AIR TUBING AND CONTROL WIRES TO SOLENOID PANEL 601, TYPICAL FOR ALL PNEUMATIC VALVES.

LIQUID PHASE SEPARATORS

AIR COMPRESSOR

- FINAL DESIGN - FOR AGENCY APPROVAL ONLY

REGISTERED PROFESSIONAL ENGINEER DWAYNE CAMPBELL No. C 072175 Exp 06/30/16 CIVIL STATE OF CALIFORNIA

ETIC ENGINEERING

ARCADIS

NO.	DATE	DESCRIPTION	GM/SPEC	DWN	CHKD	SUPV	APVD	BY
2	11/18/15	FINAL DESIGN		AJW	JPB	DAC	RAO	
1	9/8/14	PRE-FINAL (90%) DESIGN		MBY			TPF	
0	4/5/13	INTERMEDIATE (60%) DESIGN		MBY			TPF	

REVISIONS

APPROVED BY	
RAO	SO
	SUPV
	DSGN
	DWN
	CHKD
	OK
	DATE
	SCALES

TOPOCK GROUNDWATER REMEDIATION PROJECT

P&ID

LIQUID PHASE SEPARATORS & AIR COMPRESSOR

GAS TRANSMISSION & DISTRIBUTION

PACIFIC GAS AND ELECTRIC COMPANY

SAN FRANCISCO, CALIFORNIA

MICROFILM	
BILL OF MATL	
DWG LIST	
SUPSDS	
SUPSD BY	
SHEET NO.	of SHEETS
I-12-05	REV 2

N1808

11/03/2015, 17:25, G:\Graphics\AR\TOPOCK-01\Submittal_100%\DWG\I-Instrumentation\I-12-05.dwg, Tab: I-12-05

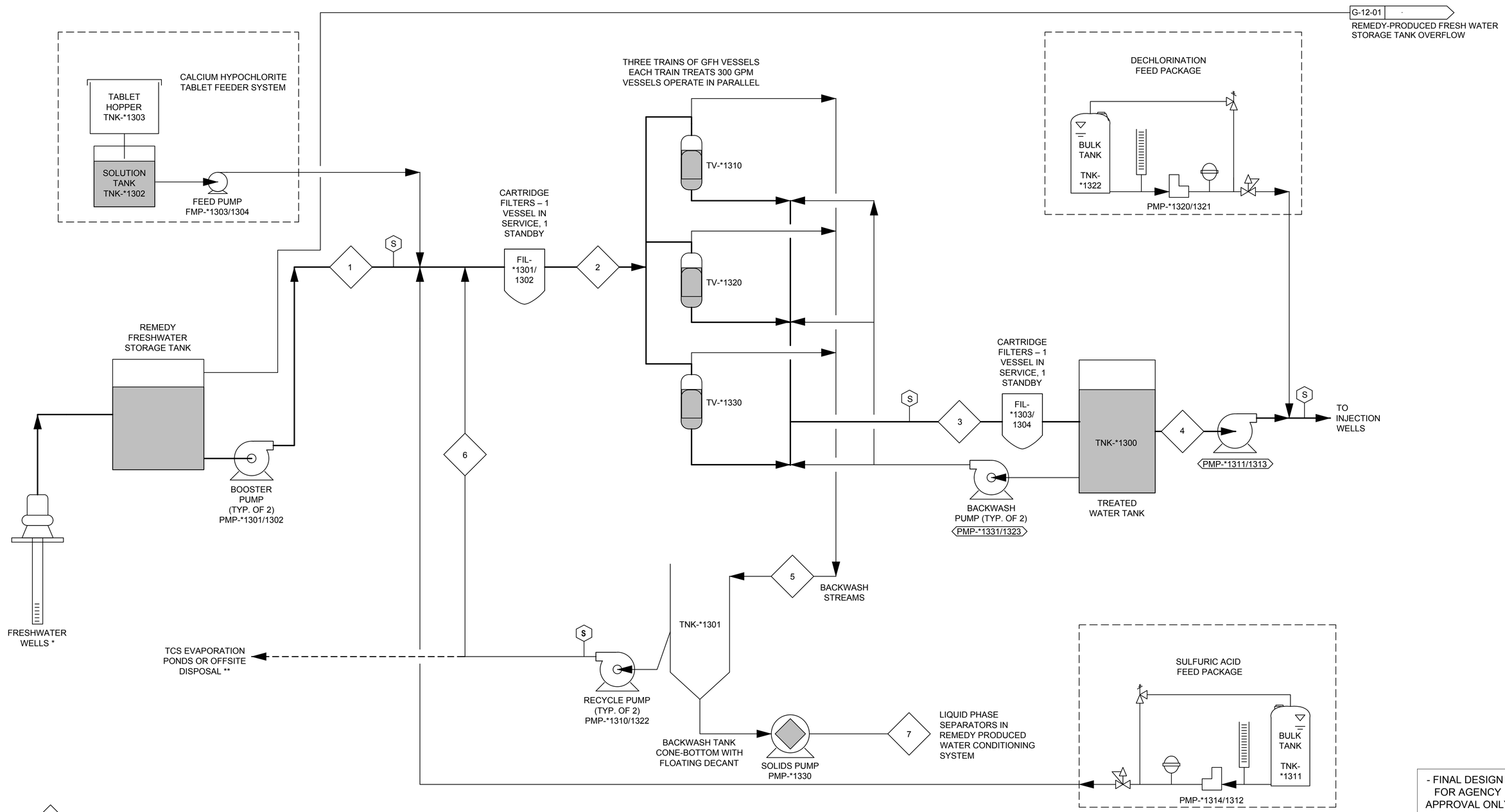

5 STREAM NUMBER FOR MASS BALANCE

S SAMPLING PORT

NOTE: * - FRESHWATER WELLS INCLUDE PRIMARY SOURCE HNWR-1A SECONDARY SOURCE HNWR-1 AND CONTINGENT SOURCE SITE B.
** - SECONDARY REUSE OPTION

- FINAL DESIGN - FOR AGENCY APPROVAL ONLY

REGISTERED PROFESSIONAL ENGINEER BENJAMIN J. WUERL C 67811 EXP 6/30/17 STATE OF CALIFORNIA

ETIC ENGINEERING

ARCADIS

NO.	DATE	DESCRIPTION	GM/SPEC	DWN	CHKD	SUPV	APVD BY
2	11/18/15	FINAL DESIGN		AJW	JPB	BW	RAO
1	9/8/14	PRE-FINAL (90%) DESIGN		JP	LO	JP	CH
0	4/5/13	INTERMEDIATE (60%) DESIGN		JP	LO	JP	CH

REVISIONS

APPROVED BY: RAO

SO / SUPV / DSGN / DWN / CHKD / OK / DATE / SCALES

TOPOCK GROUNDWATER REMEDIATION PROJECT

PROCESS SCHEMATIC FRESHWATER PRE-INJECTION TREATMENT SYSTEM

GAS TRANSMISSION & DISTRIBUTION
PACIFIC GAS AND ELECTRIC COMPANY
SAN FRANCISCO, CALIFORNIA

MICROFILM
BILL OF MATL
DWG LIST
SUPSDS
SUPSD BY
SHEET NO. of SHEETS
G-13-01 REV 2

11/04/2015, 12:20, G:\Graphics\ARI\TOPOCK-01\Submittal_100%\DWGs\G-General\G-13-01.dwg, Tab: G-13-01

N1808

Stream #	1	2	3	4	5	6	7
Waste Stream	Downstream of the Booster Pumps	To the Media Filters	To the Treated Water Tank	To the Injection Wells	Backwash	Recycle	Liquid Phase Separators in Remedy Produced Water Conditioning Building
Maximum Flow (gpm)	900	900	900	900			
Maximum Flow (ac-ft/Year)	1,452	1,452	1,452	1,452			
Arsenic (mg/L)	0.015	0.015	0.001	0.001	0.001		
Arsenic (lbs/yr)	59.1	59.1					
pH	8.0	6.5	6.5	6.5	6.5		
Chlorine (mg/L)	0	1.15	1.15	1.15	1.15		
Calcium Hypochlorite (lb/year)		6,969					
Sulfuric Acid (mg/L)		40					
Acid (gal/year)		10,297					
Dechlorination Agent (mg/L)					74		
Dechlorination Agent (gal/yr)					2,550		
Wastewater Volume (MG/yr)					0.36	0.344	0.018
Wastewater Volume (ac-ft/yr)					1.11	1.055	0.056
Nominal Flow (gpm)	450	450	450	450			
Nominal Flow (ac-ft/Year)	726	726	726	726			
Arsenic (mg/L)	0.015	0.015	0.001	0.001	0.001		
Arsenic (lbs/yr)	29.5	29.5					
pH	8.0	6.5	6.5	6.5	6.5		
Chlorine (mg/L)	0	1.15	1.15	1.15	1.15		
Calcium Hypochlorite (lb/year)		3,485					
Sulfuric Acid (mg/L)		40					
Acid (gal/year)		5,148					
Dechlorination Agent (mg/L)					74		
Dechlorination Agent (gal/yr)					1275		
Wastewater Volume (MG/yr)					0.18	0.172	0.009
Waste Volume (ac-ft/yr)					0.56	0.528	0.028

- FINAL DESIGN -
FOR AGENCY APPROVAL ONLY

REGISTERED PROFESSIONAL ENGINEER
BENJAMIN J. WUERL
C 67811
EXP 6/30/17
CIVIL
STATE OF CALIFORNIA

ETIC ENGINEERING

ARCADIS

NO.	DATE	DESCRIPTION	GM/SPEC	DWN	CHKD	SUPV	APVD BY
2	11/18/15	FINAL DESIGN		AJW	JPB	BW	RAO
1	9/8/14	PRE-FINAL (90%) DESIGN		JP	LO	JP	CH
0	4/5/13	INTERMEDIATE (60%) DESIGN		JP	LO	JP	CH

REVISIONS

APPROVED BY: RAO

SO | SUPV | DSGN | DWN | CHKD | OK | DATE | SCALES

TOPOCK GROUNDWATER REMEDIATION PROJECT
MASS BALANCE
FRESHWATER PRE-INJECTION TREATMENT SYSTEM
GAS TRANSMISSION & DISTRIBUTION
PACIFIC GAS AND ELECTRIC COMPANY
SAN FRANCISCO, CALIFORNIA

MICROFILM | BILL OF MATL | DWG LIST | SUPSDS | SUPSD BY

SHEET NO. G-13-02 of SHEETS | REV 2

N1B08

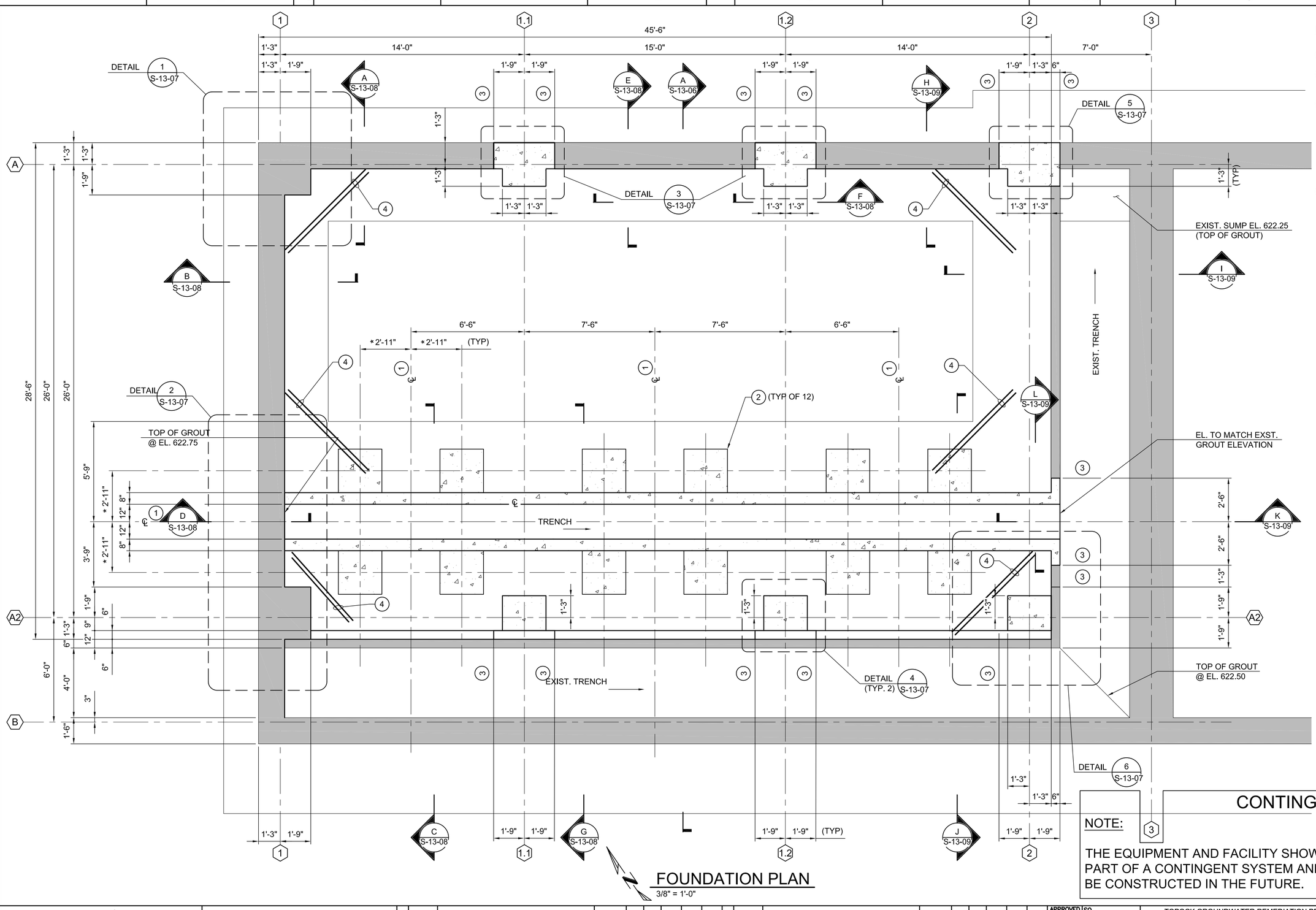

KEY NOTES:

1. ℄ TREATMENT VESSEL.
2. VESSEL SUPPORTS, SEE DETAIL 1 ON DWG. S-13-09.
3. EXIST. CONSTRUCTION JOINTS. REMOVE CONCRETE AS INDICATED, CARE SHALL BE TAKEN SO AS NOT TO DAMAGE EXISTING REINFORCING STEEL. INCORPORATE EXISTING REINFORCING AS INDICATED INTO NEW CONSTRUCTION.
4. PROVIDE ADDITIONAL 2-#6 x 6'-6" @ 3" C/C TOP & BOTTOM.

NOTES:

* 1. DIMENSIONS MARKED WITH AN ASTERISK ARE TO BE VERIFIED WITH MANUFACTURER'S APPROVED SUBMITTALS.

2. ▭ INDICATE EXISTING WALLS

FOUNDATION PLAN

3/8" = 1'-0"

CONTINGENT

NOTE:

THE EQUIPMENT AND FACILITY SHOWN IS PART OF A CONTINGENT SYSTEM AND MAY BE CONSTRUCTED IN THE FUTURE.

- FINAL DESIGN - FOR AGENCY APPROVAL ONLY

REGISTERED PROFESSIONAL ENGINEER VINOD M. BADANI C-041281 EXP. DATE 3/31/17 CIVIL STATE OF CALIFORNIA

E2 Consulting Engineers, Inc.
1900 Powell Street, Ste. 250
Emeryville, CA 94608
(510) 652-1164

ARCADIS

NO.	DATE	DESCRIPTION	GM/SPEC	DWN	CHKD	SUPV	APVD	BY
1	11/18/15	FINAL DESIGN	MD	KJ	VMB	RAO		
0	09/08/14	PRE-FINAL (90%) DESIGN	MD	KJ	VMB	VMB		

REVISIONS

APPROVED BY	
RAO	SO
	SUPV
	DSGN
	DWN
	CHKD
	OK
	DATE
	SCALES 3/8"=1'-0"

TOPOCK GROUNDWATER REMEDIATION PROJECT
FRESH WATER PRE-INJECTION TREATMENT SYSTEM BUILDING FOUNDATION PLAN
GAS TRANSMISSION & DISTRIBUTION
PACIFIC GAS AND ELECTRIC COMPANY
SAN FRANCISCO, CALIFORNIA

MICROFILM	
BILL OF MATL	
DWG LIST	
SUPSDS	
SUPSD BY	
SHEET NO.	of SHEETS
S-13-01	REV 0

E2-S-XXX-1201.dwg

N180B

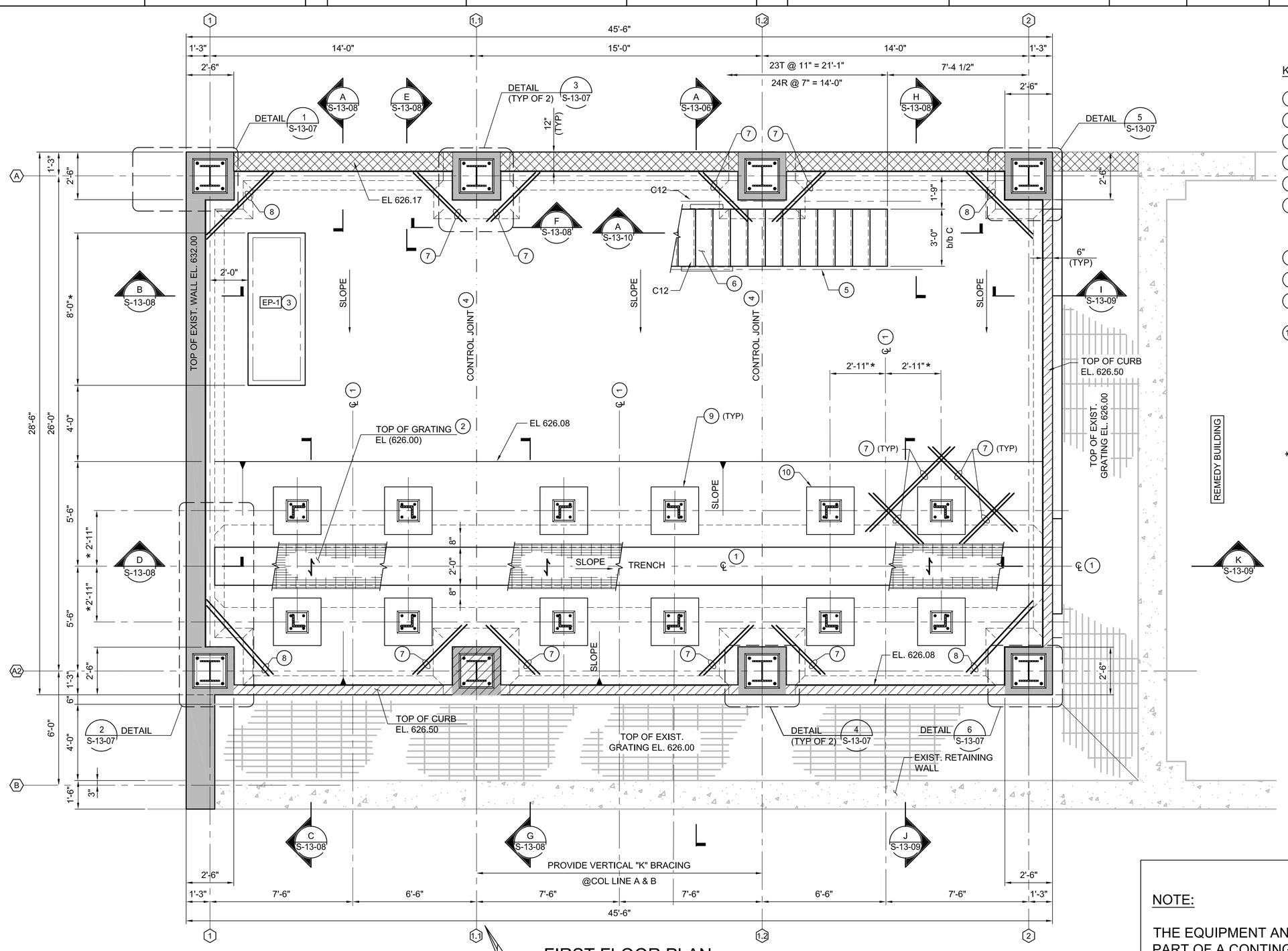

KEY NOTES:

1. ℄ TREATMENT VESSEL
2. 1 1/2" DEEP FRP GRATING, SEE DETAIL 1 ON DWG. S-00-04.
3. EP-1 INDICATES EQUIPMENT PAD, SEE DETAIL 10 ON S-00-02.
4. CONTROL JOINT, SEE DETAIL 7 ON DWG. S-00-02.
5. TOP MOUNTED HANDRAIL, SEE DETAIL 4 ON DWG. S-00-03.
6. STEEL STAIRS, TO BE DESIGNED BY CONTRACTOR. MEMBER SIZES SHOWN ARE FOR INFORMATION ONLY. CONTRACTOR TO SELECT PROPER MEMBER SIZES TO SUPPORT DESIGN LIVE LOADS OF 100 PSF MINIMUM.
7. PROVIDE ADDITIONAL 2 - #6 x 6'-6" @ 3 C/C. TOP AND BOTTOM.
8. PROVIDE ADDITIONAL 2 - #6 x 4'-6" @ 3 C/C, TOP AND BOTTOM.
9. PROVIDE PERIMETER 1/2" EXPANSION JOINT FILLER AND 1/2"x1/2" JOINT SEALANT AT TOP.
10. VESSEL SUPPORT, SEE DETAIL 1 ON DWG. S-13-09.

NOTES:

1. FOR GENERAL STRUCTURAL NOTES, SEE DWG. S-00-01.

* 2. DIMENSIONS MARKED WITH AN ASTERISK ARE TO BE VERIFIED WITH MANUFACTURER'S APPROVED SUBMITTALS.

FIRST FLOOR PLAN

3/8" = 1'-0"

CONTINGENT

NOTE:

THE EQUIPMENT AND FACILITY SHOWN IS PART OF A CONTINGENT SYSTEM AND MAY BE CONSTRUCTED IN THE FUTURE.

- FINAL DESIGN - FOR AGENCY APPROVAL ONLY

REGISTERED PROFESSIONAL ENGINEER VINOD M. BADANI C-041281 EXP. DATE 3/31/17 CIVIL STATE OF CALIFORNIA

E2 Consulting Engineers, Inc.
1900 Powell Street, Ste. 250
Emeryville, CA 94608
(510) 652-1164

ARCADIS

NO.	DATE	DESCRIPTION	GM/SPEC	DWN	CHKD	SUPV	APVD BY
1	11/18/15	FINAL DESIGN		MD	KJ	VMB	RAO
0	09/08/14	PRE-FINAL (90%) DESIGN		MD	KJ	VMB	VMB

REVISIONS

APPROVED BY	
RAO	SO
	SUPV
	DSGN
	DWN
	CHKD
	OK
	DATE
	SCALES 3/8"-1'-0"

TOPOCK GROUNDWATER REMEDIATION PROJECT
FRESH WATER PRE-INJECTION TREATMENT SYSTEM BUILDING
FIRST FLOOR PLAN
GAS TRANSMISSION & DISTRIBUTION
PACIFIC GAS AND ELECTRIC COMPANY
SAN FRANCISCO, CALIFORNIA

MICROFILM	
BILL OF MATL	
DWG LIST	
SUPSDS	
SUPSD BY	
SHEET NO.	of SHEETS
S-13-02	REV 0

E2-S-XXX-1201.dwg

N1808

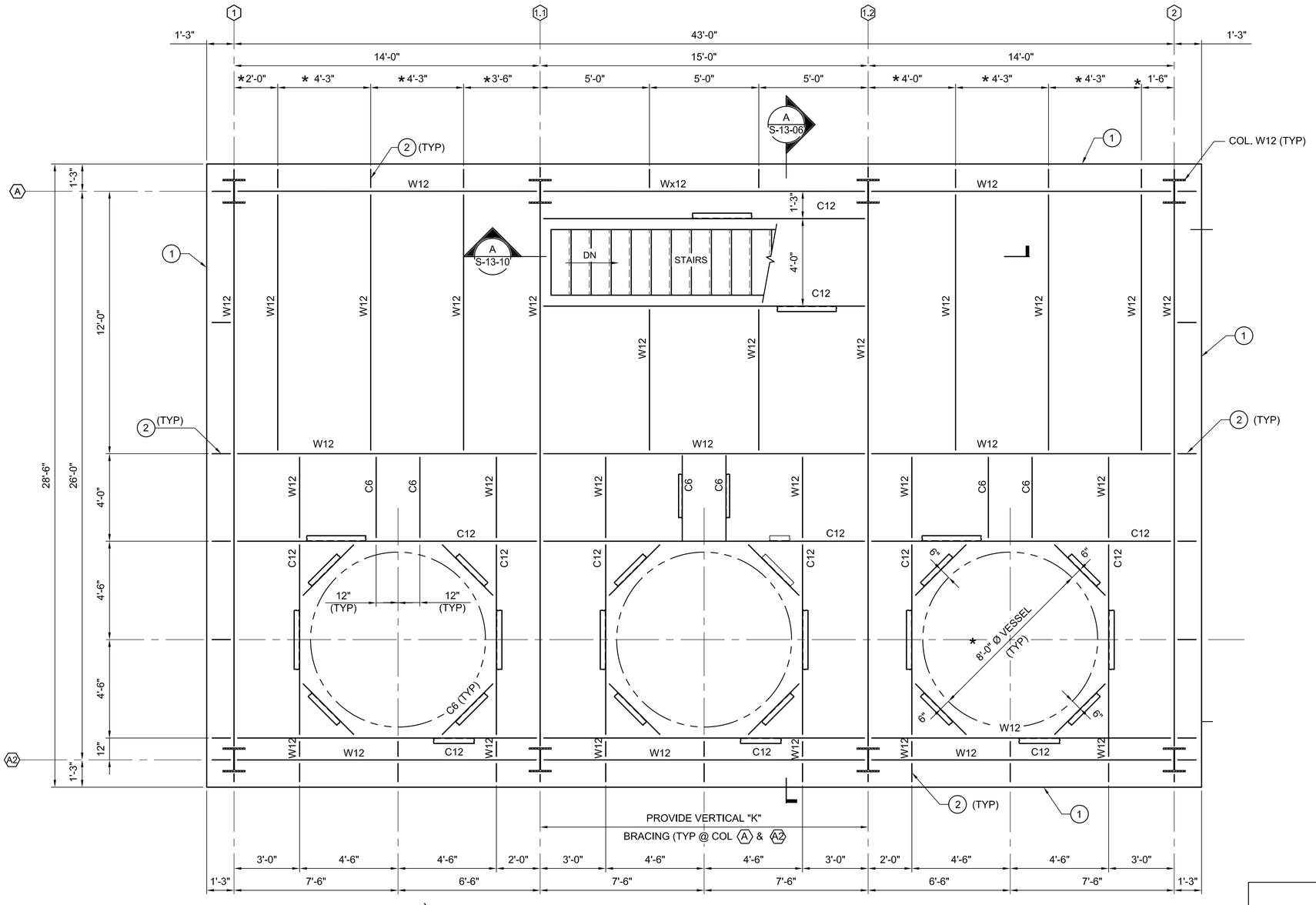

SECOND FLOOR FRAMING PLAN @ EL. 639.50

3/8" = 1'-0"

KEY NOTES:

(1) PROVIDE PERIMETER CLOSURE L.

(2) PROVIDE SUPPORT MEMBERS AS EQUIRED

NOTES:

1. MEMBER SIZES SHOWN ARE FOR INFORMATION ONLY. CONTRACTOR IS RESPONSIBLE TO SELECT APPROPRIATE MEMBER SIZE TO MEET DESIGN INTENT. MEMBERS ARE TO BE DESIGNED FOR:

   A. MINIMUM LIVE LOAD = 100 PSF

   B. EQUIPMENT LOAD

   C. ALLOWANCE FOR PIPING LOAD OF MINIMUM 25 PSF.

   D. WIND LOADS

   DESIGN HORIZONTAL WIND LOADS ON VERTICAL SURFACES:

   20 PSF (MINIMUM)
   BASIC WIND SPEED: 100 MPH
   IMPORTANCE FACTOR: 1.25

   E. SEISMIC LOADS

   CBC, 2013 SITE CLASS: D
   SEISMIC DESIGN CATEGORY: D

   S_S = 0.230
   S_1 = 0.120
   S_{MS} = 0.368
   S_{M1} = 0.279
   S_{DS} = 0.245
   S_{D1} = 0.168
   IMPORTANCE FACTOR: 1.25

2. FOR GENERAL STRUCTURAL NOTES, SEE DWG. S-00-01.

* 3. DIMENSION MARKED WITH AN ASTERISK TO BE VERIFIED WITH APPROVED EQUIPMENT SIBMITTALS.

4. TOP OF STEEL MEMBERS @ EL. 639.50 UNLESS NOTED OTHERWISE.

CONTINGENT

NOTE:

THE EQUIPMENT AND FACILITY SHOWN IS PART OF A CONTINGENT SYSTEM AND MAY BE CONSTRUCTED IN THE FUTURE.

- FINAL DESIGN - FOR AGENCY APPROVAL ONLY

REGISTERED PROFESSIONAL ENGINEER
VINOD M. BADANI
C-041281
EXP. DATE 3/31/17
CIVIL
STATE OF CALIFORNIA

E2 Consulting Engineers, Inc.
1900 Powell Street, Ste. 250
Emeryville, CA 94608
(510) 652-1164

ARCADIS

N1808

NO.	DATE	DESCRIPTION	GM/SPEC	DWN	CHKD	SUPV	APVD BY
1	11/18/15	FINAL DESIGN		MD	KJ	VMB	RAO
0	09/08/14	PRE-FINAL (90%) DESIGN		MD	KJ	VMB	VMB

REVISIONS

APPROVED BY	
RAO	

SO	
SUPV	
DSGN	
DWN	
CHKD	
OK	
DATE	
SCALES	3/8"=1'-0"

TOPOCK GROUNDWATER REMEDIATION PROJECT
FRESH WATER PRE-INJECTION TREATMENT SYSTEM BUILDING
SECOND FLOOR FRAMING PLAN @ EL. 639.50
GAS TRANSMISSION & DISTRIBUTION
PACIFIC GAS AND ELECTRIC COMPANY
SAN FRANCISCO, CALIFORNIA

MICROFILM	
BILL OF MATL	
DWG LIST	
SUPSDS	
SUPSD BY	
SHEET NO.	of SHEETS
S-13-03	REV 0

E2-S-XXX-1201.dwg

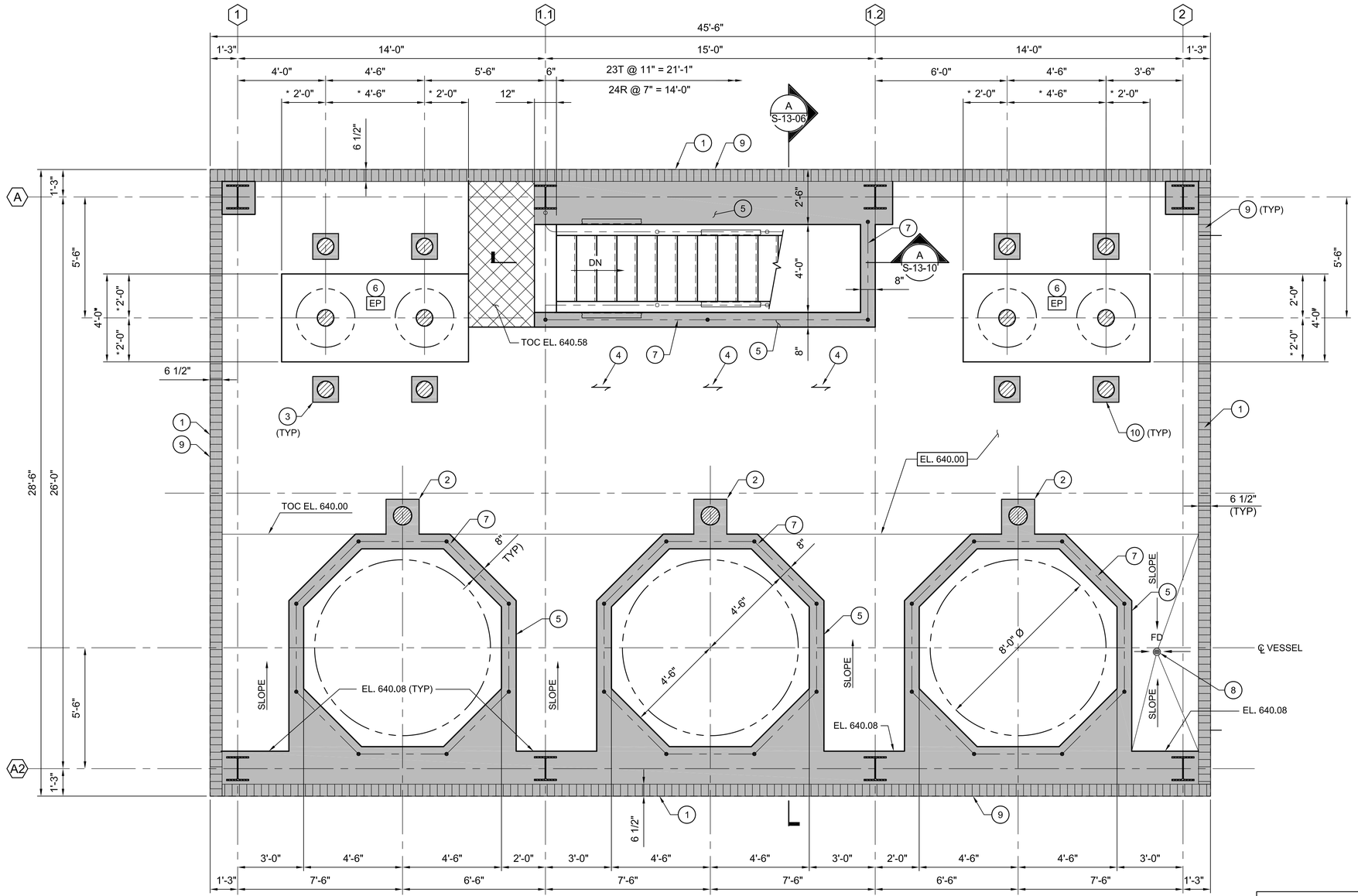

SECOND FLOOR PLAN

3/8" = 1'-0"

KEY NOTES:

1. PROVIDE PERIMETER ARCHITECTURAL ALUMINUM BAR GRILLE 6" DEEP (VERTICALS @ 12" C/C, HORIZONTAL @ 6" C/C) PROVIDE ATTACHMENT AS RECOMMENDED BY MANUFACTURER.
2. SEE DETAIL 3 , DWG. S-13-10.
3. SEE DETAIL 4, DWG. S-13-10.
4. FLOOR: COMPOSITE FLOOR DECK - TOTAL THICKNESS MINIMUM = 6".

   STEEL DECK: MINIMUM 18 GAGE, 1 1/2" DEEP x 36" WIDE PANELS, RIBS SPACING @ 6" C/C

   I + - 0.27 IN 4/FT S + = 0.312 IN 3/FT
   I (-) - 0.28 IN 4/FT S (-) = 0.316 IN 3/FT

   CONCRETE: NORMAL WEIGHT CONCRETE, WITH f'c = 4,000 PSI
   PROVIDE MINMUM REINF: #4 @ 12" EW (1 1/2" COVER AT TOP). FOR DESIGN LOADS, SEE DWG. S-13-03.
5. SHADED AREA INDICATE CONCRETE - 6" HIGH UNLESS NOTED OTHERWISE.
6. EP INDICATES EQUIPMENT PAD, SEE DETAIL 9 ON DWG. S-00-02. HEIGHT OF EQUIPMENT PAD MINIMUM 6"
7. TOP MOUNTED HR, (W/O KICK PLATE). SEE DETAIL 1 ON S-00-03.
8. FD INDICATES FLOOR DRAIN. TOP OF FD @ EL, 639.96.
9. PROVIDE CLOSURE L AS REQUIRED.
10. PIPE PENETRATION. PROVIDED ADDITIONAL REINF. PER DETAIL 4 ON DWG. S-00-02.

NOTES:

1. FOR FRAMING PLAN, SEE DWG. S-13-03.
2. FOR GENERAL STRUCTURAL NOTES, SEE DWG. S-00-01.

* 3. DIMENSION MARKED WITH AN ASTERISK ARE TO BE VERIFIED WIH APPROVED SUBMITTALS.

CONTINGENT

NOTE:

THE EQUIPMENT AND FACILITY SHOWN IS PART OF A CONTINGENT SYSTEM AND MAY BE CONSTRUCTED IN THE FUTURE.

- FINAL DESIGN - FOR AGENCY APPROVAL ONLY

REGISTERED PROFESSIONAL ENGINEER VINOD M. BADANI C-041281 EXP. DATE 3/31/17 CIVIL STATE OF CALIFORNIA

E2 Consulting Engineers, Inc.
1900 Powell Street, Ste. 250
Emeryville, CA 94608
(510) 652-1164

ARCADIS

NO.	DATE	DESCRIPTION	GM/SPEC	DWN	CHKD	SUPV	APVD	BY
1	11/18/15	FINAL DESIGN		MD	KJ	VMB	RAO	
0	09/08/14	PRE-FINAL (90%) DESIGN		MD	KJ	VMB	VMB	

REVISIONS

APPROVED BY	
RAO	SO
	SUPV
	DSGN
	DWN
	CHKD
	OK
	DATE
	SCALES 3/8"=1'-0"

TOPOCK GROUNDWATER REMEDIATION PROJECT
FRESH WATER PRE-INJECTION TREATMENT SYSTEM BUILDING
SECOND FLOOR PLAN
GAS TRANSMISSION & DISTRIBUTION
PACIFIC GAS AND ELECTRIC COMPANY
SAN FRANCISCO, CALIFORNIA

MICROFILM	
BILL OF MATL	
DWG LIST	
SUPSDS	
SUPSD BY	
SHEET NO. of	SHEETS
S-13-04	REV 0

E2-S-XXX-1201.dwg

N180B

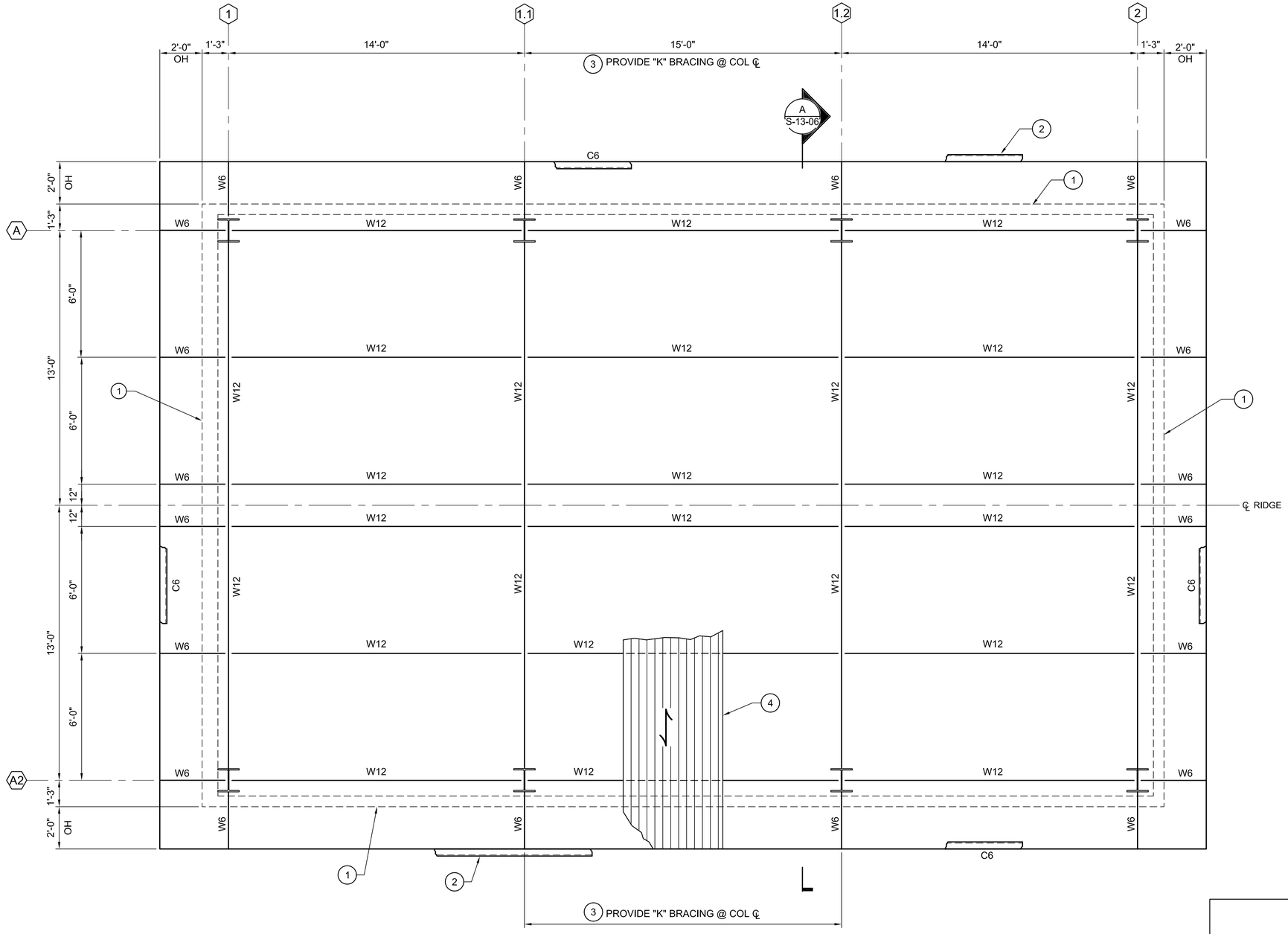

ROOF PLAN

3/8" = 1'-0"

KEY NOTES:

1. PROVIDE PERIMETER ARCHITECTURAL ALUMINUM BAR GRILLE 6" DEEP (VERTICALS @ 12" C/C, HORIZONTAL @ 6" C/C) PROVIDE ATTACHMENT AS RECOMMENDED BY MANUFACTURER.
2. GUTTER AND DOWNSPOUT NOT SHOWN. SEE ARCHITACTURAL DWGS.
3. PROVIDE "K" BRACING BETWEEN FIRST AND SECOND FLOOR, SECOND FLOOR AND ROOF.
4. ROOF CONSTRUCTION:
   1 1/2" METAL ROOF DECK, ROOF DECK: 1 1/2" DEEP X 36" WIDE PANEL (6 RIBS @ 6" C/C PER PANEL) GALVANIZED. (18 GAUGE)

   MINIMUM PROPERTIES/LF OF WIDTH:
   I = 0.29 IN /LF
   +S = 0.315 IN /LF
   -S = 0.316 IN /LF
   PROVIDE 2" RIGID INSULATION AND STANDING SEAM ROOF PANELS.

   CONNECTION:
   1. USE #2 GALVANIZED SCREWS OR 1/2"Ø PUDDLE WELDS AT 6" C/C (6 PER SHEET MIN. FOR 36" WIDE PANELS) TO ATTACH ROOF DECK TO SUPPORTING MEMBERS.
   2. USE # 2 GALVANIZED SCREWS @ 12" C/C FOR SIDE CONNECTIONS.

NOTES:

1. FOR GENERAL STRUCTURAL NOTES, SEE DWG. S-00-01.
2. MEMBER SIZES SHOWN ARE FOR INFORMATION ONLY. CONTRACTOR IS RESPONSIBLE TO SELECT APPROPRIATE MEMBER SIZE TO MEET DESIGN INTENT. MEMBERS ARE TO BE DESIGNED FOR:
   A. MINIMUM LIVE LOAD = 20 PSF
   B. ALLOWANCE FOR PIPING AND MISCELLANEOUS LOAD OF MINIMUM 10 PSF

CONTINGENT

NOTE:

THE EQUIPMENT AND FACILITY SHOWN IS PART OF A CONTINGENT SYSTEM AND MAY BE CONSTRUCTED IN THE FUTURE.

- FINAL DESIGN - FOR AGENCY APPROVAL ONLY

REGISTERED PROFESSIONAL ENGINEER VINOD M. BADANI C-041281 EXP. DATE 3/31/17 CIVIL STATE OF CALIFORNIA

E2 Consulting Engineers, Inc.
1900 Powell Street, Ste. 250
Emeryville, CA 94608
(510) 652-1164

ARCADIS

NO.	DATE	DESCRIPTION	GM/SPEC	DWN	CHKD	SUPV	APVD BY
1	11/18/15	FINAL DESIGN	MD	KJ	VMB	RAO	
0	09/08/14	PRE-FINAL (90%) DESIGN	MD	KJ	VMB	VMB	

REVISIONS

APPROVED BY	RAO
SO	
SUPV	
DSGN	
DWN	
CHKD	
OK	
DATE	
SCALES	3\8"=1'-0"

TOPOCK GROUNDWATER REMEDIATION PROJECT
FRESH WATER PRE-INJECTION TREATMENT SYSTEM BUILDING ROOF PLAN
GAS TRANSMISSION & DISTRIBUTION
PACIFIC GAS AND ELECTRIC COMPANY
SAN FRANCISCO, CALIFORNIA

MICROFILM	
BILL OF MATL	
DWG LIST	
SUPSDS	
SUPSD BY	
SHEET NO.	of SHEETS
S-13-05	REV 0

E2-S-XXX-1201.dwg

N1808

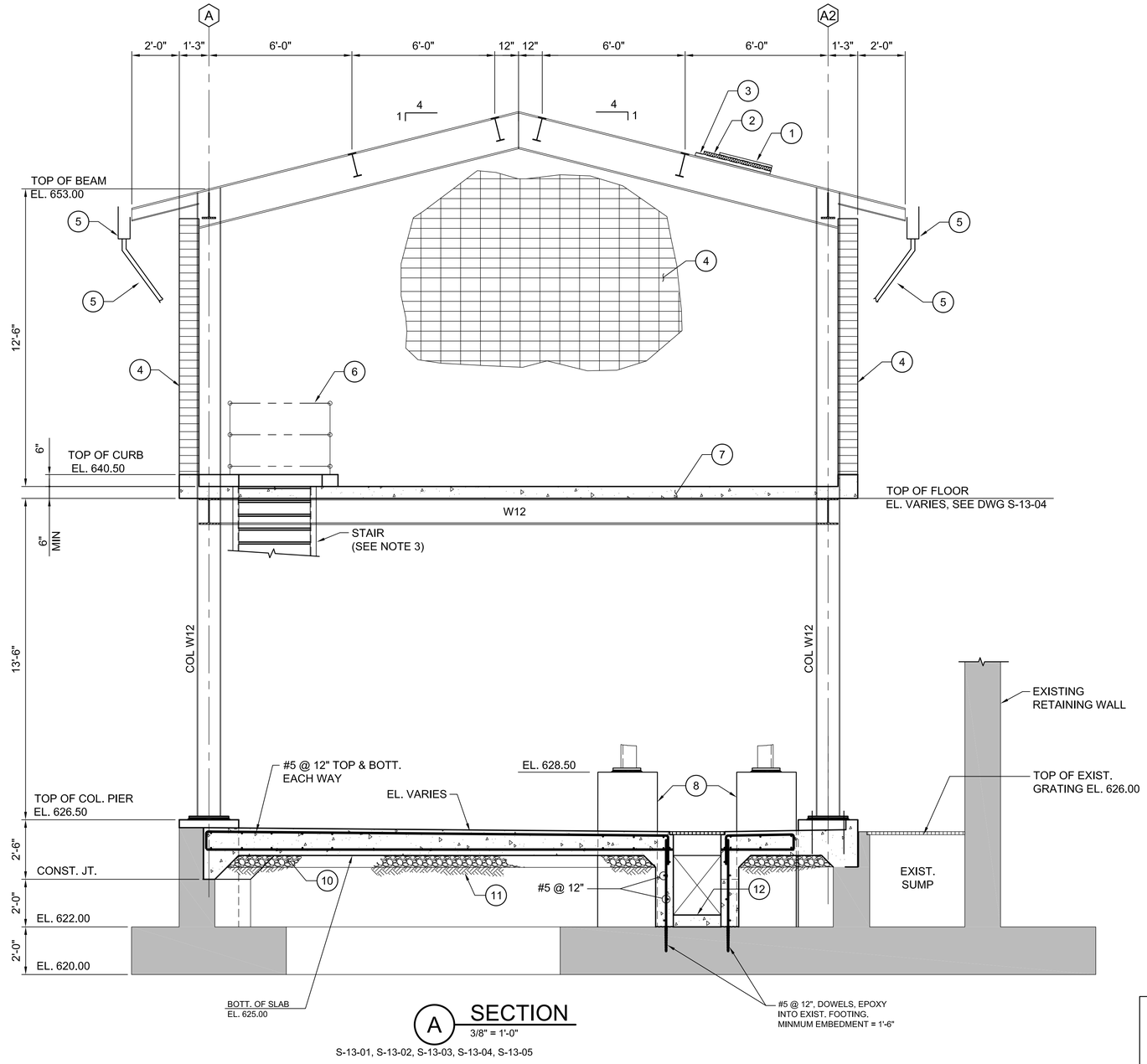

A SECTION
3/8" = 1'-0"

S-13-01, S-13-02, S-13-03, S-13-04, S-13-05

KEY NOTES:

1. STANDING SEAM ROOF.
2. 2" RIGID INSULATION
3. METAL ROOF DECK.
4. PERIMETER ARCHITECTURAL ALUMINUM BAR GRILLE.
5. GUTTER AND DOWNSPOUT (TYP).
6. TOP MOUNTED HR W/O KICK PLATE.
7. COMPOSITE FLOOR DECK, SEE DWG. S-13-04 FOR ADDITIONAL INFORMATION.
8. VESSEL SUPPORT PIERS.(TYP OF 12). SEE DETAIL 1 ON DWG. S-13-09.
9. ELECTRICAL PANEL. EP INDICATES EQUIPMENT PAD, SEE DETAIL 10 ON S-00-02 (MINIMUM HEIGHT TO BE 6").
10. 6" THICK, CRUSHED ROCK.
11. SUBGRADE, COMPACTED TO 95% PER ASTM D 1557.
12. CONCRETE FILL.

NOTES:

1. FOR EQUIPMENT LAYOUT AND PIPING, SEE MECHANICAL DRAWINGS.
2. FOR ADDITIONAL INFORMATION, SEE ARCHITECTURAL DRAWINGS.
3. PROVIDE MINIMUM CLEARANCE OF 7'-0" @ COLUMN LINE 1.2

CONTINGENT

NOTE:

THE EQUIPMENT AND FACILITY SHOWN IS PART OF A CONTINGENT SYSTEM AND MAY BE CONSTRUCTED IN THE FUTURE.

- FINAL DESIGN -
FOR AGENCY
APPROVAL ONLY

REGISTERED PROFESSIONAL ENGINEER
VINOD M. BADANI
C-041281
EXP. DATE 3/31/17
CIVIL
STATE OF CALIFORNIA

E2 Consulting Engineers, Inc.
1900 Powell Street, Ste. 250
Emeryville, CA 94608
(510) 652-1164

ARCADIS

NO.	DATE	DESCRIPTION	GM/SPEC	DWN	CHKD	SUPV	APVD BY
1	11/18/15	FINAL DESIGN	MD	KJ	VMB	RAO	
0	09/08/14	PRE-FINAL (90%) DESIGN	MD	KJ	VMB	VMB	

REVISIONS

APPROVED BY	RAO
SO	
SUPV	VMB
DSGN	KDD
DWN	MD
CHKD	KJ
OK	VMB
DATE	6/30/14
SCALES	3/8"=1'-0"

TOPOCK GROUNDWATER REMEDIATION PROJECT
FRESH WATER PRE-INJECTION TREATMENT SYSTEM BUILDING SECTION
GAS TRANSMISSION & DISTRIBUTION
PACIFIC GAS AND ELECTRIC COMPANY
SAN FRANCISCO, CALIFORNIA

MICROFILM	
BILL OF MATL	
DWG LIST	
SUPSDS	
SUPSD BY	
SHEET NO.	of SHEETS
S-13-06	REV 0

E2-S-XXX-1201.dwg

N1808

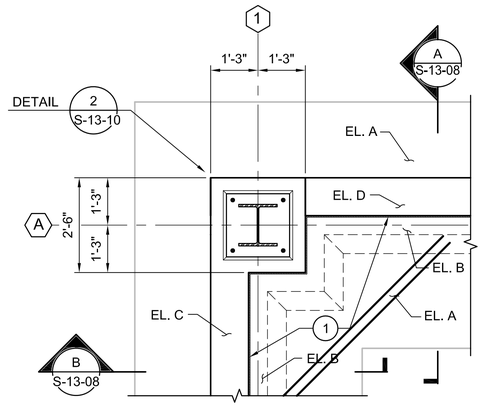

1 DETAIL
1/2" = 1'-0"
S-13-01, S-13-02

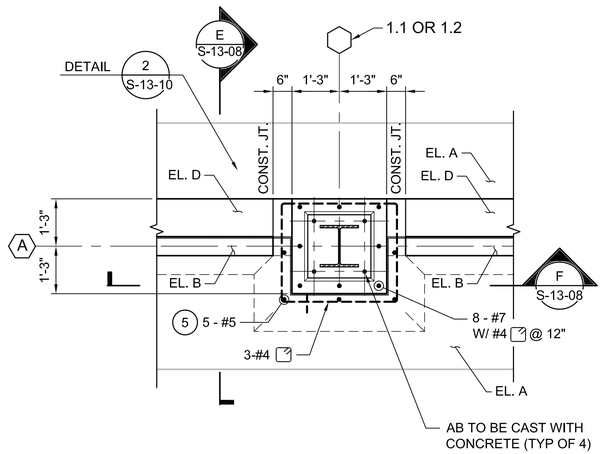

3 DETAIL
1/2" = 1'-0"
S-13-01, S-13-02

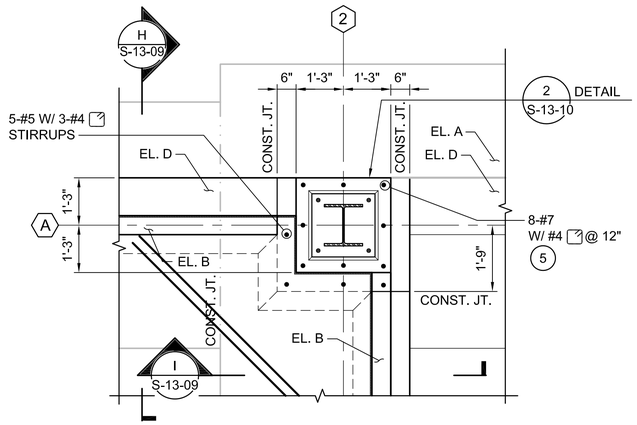

5 DETAIL
1/2" = 1'-0"
S-13-01, S-13-02

KEY NOTES:

1. PROVIDE PERIMETER 1/2" EXPANSION JOINT MATERIAL W/ 1/2" x 1/2" JOINT SEALANT @ TOP.
2. 6" THICK CRUSHED ROCK
3. BACKFILL COMPACTED @ 95% PER ASTM D 1557.
4. CONC. FILL.
5. REMOVE EXISTING CAP AND SPLICE W/ EXISTING 8-#7 BARS. (THREADED SPLICE).

TABLE OF ELEVATION		
EL. ◯	ELEVATION	REMARK
A	622.00	TOP OF FOOTING
B	624.00	TOP OF SHELF FOR SLAB-ON-GRADE
C	632.00	TOP OF WALL
D	626.17	TOP OF CONC.
E	626.00	TOP OF GRATING

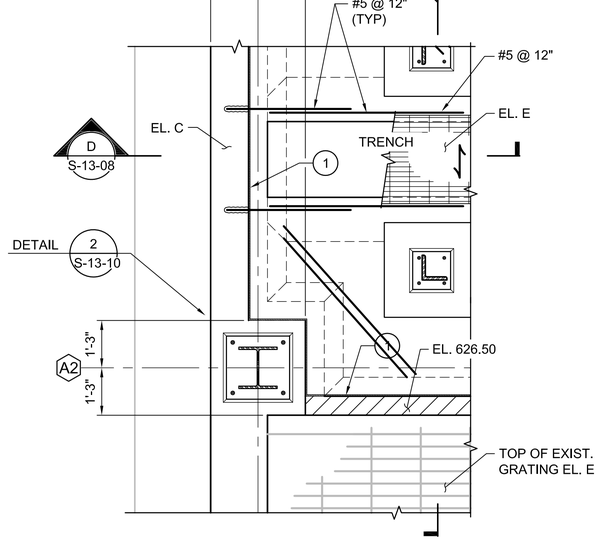

2 DETAIL
1/2" = 1'-0"
S-13-01, S-13-02

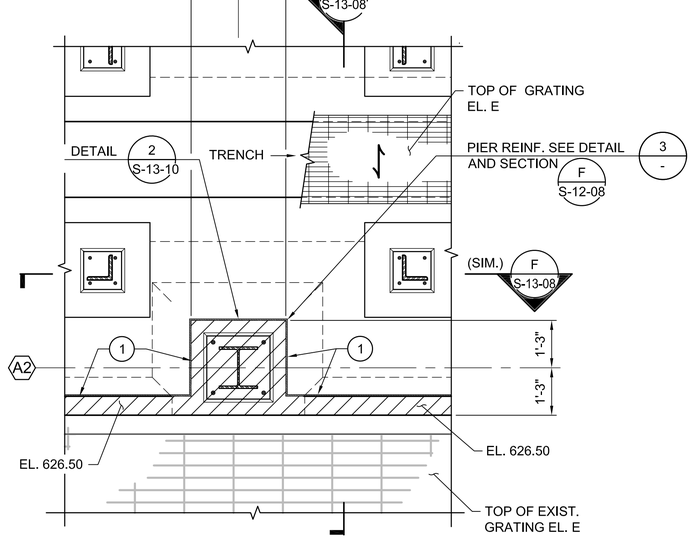

4 DETAIL
1/2" = 1'-0"
S-13-01, S-13-02

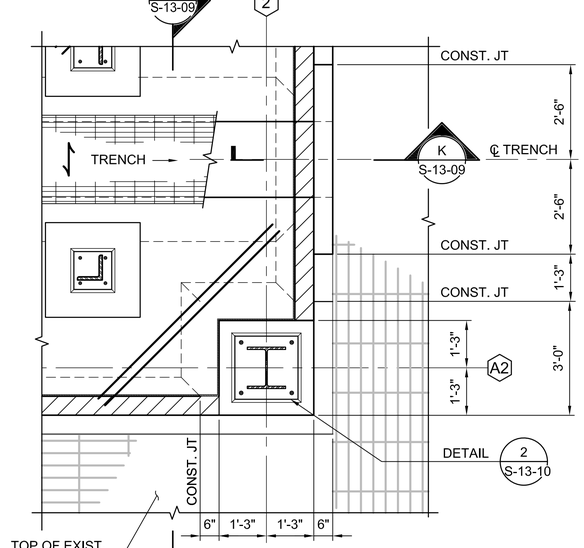

6 DETAIL
1/2" = 1'-0"
S-13-01, S-13-02

CONTINGENT

NOTE:

THE EQUIPMENT AND FACILITY SHOWN IS PART OF A CONTINGENT SYSTEM AND MAY BE CONSTRUCTED IN THE FUTURE.

- FINAL DESIGN -
FOR AGENCY APPROVAL ONLY

REGISTERED PROFESSIONAL ENGINEER
VINOD M. BADANI
C-041281
EXP. DATE 3/31/17
CIVIL
STATE OF CALIFORNIA

E2 Consulting Engineers, Inc.
1900 Powell Street, Ste. 250
Emeryville, CA 94608
(510) 652-1164

ARCADIS

NO.	DATE	DESCRIPTION	GM/SPEC	DWN	CHKD	SUPV	APVD BY
1	11/18/15	FINAL DESIGN	MD	KJ	VMB	RAO	
0	09/08/14	PRE-FINAL (90%) DESIGN	MD	KJ	VMB	VMB	

REVISIONS

APPROVED BY	
RAO	

SO	
SUPV	VMB
DSGN	KDD
DWN	MD
CHKD	KJ
OK	VMB
DATE	6/30/14
SCALES	1/2"=1'-0"

TOPOCK GROUNDWATER REMEDIATION PROJECT
FRESH WATER PRE-INJECTION TREATMENT SYSTEM BUILDING SECTIONS AND DETAILS
GAS TRANSMISSION & DISTRIBUTION
PACIFIC GAS AND ELECTRIC COMPANY
SAN FRANCISCO, CALIFORNIA

MICROFILM	
BILL OF MATL	
DWG LIST	
SUPSDS	
SUPSD BY	
SHEET NO.	of SHEETS
S-13-07	REV 0

E2-S-XXX-1201.dwg

N1808

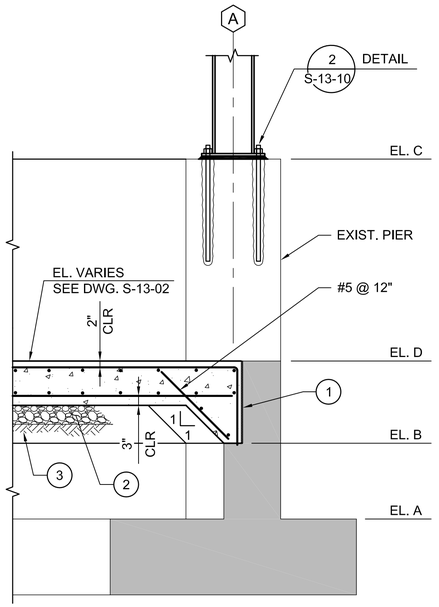

A SECTION
1/2" = 1'-0"
S-13-01, S-13-02, S-13-07

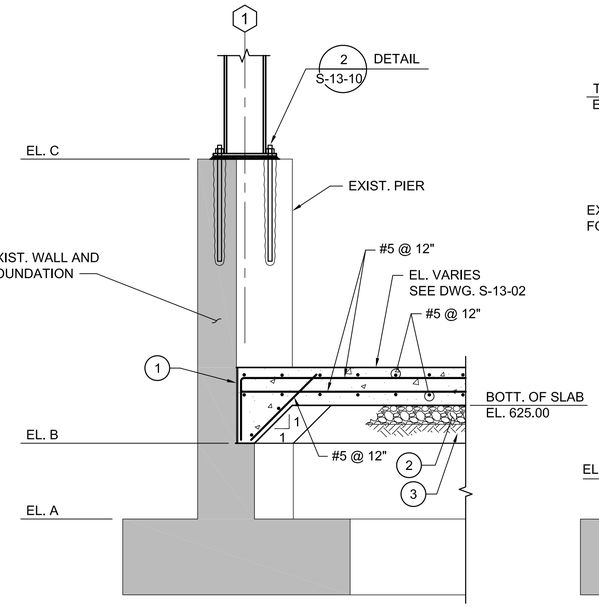

B SECTION
1/2" = 1'-0"
S-13-01, S-13-02, S-13-07, S-13-09

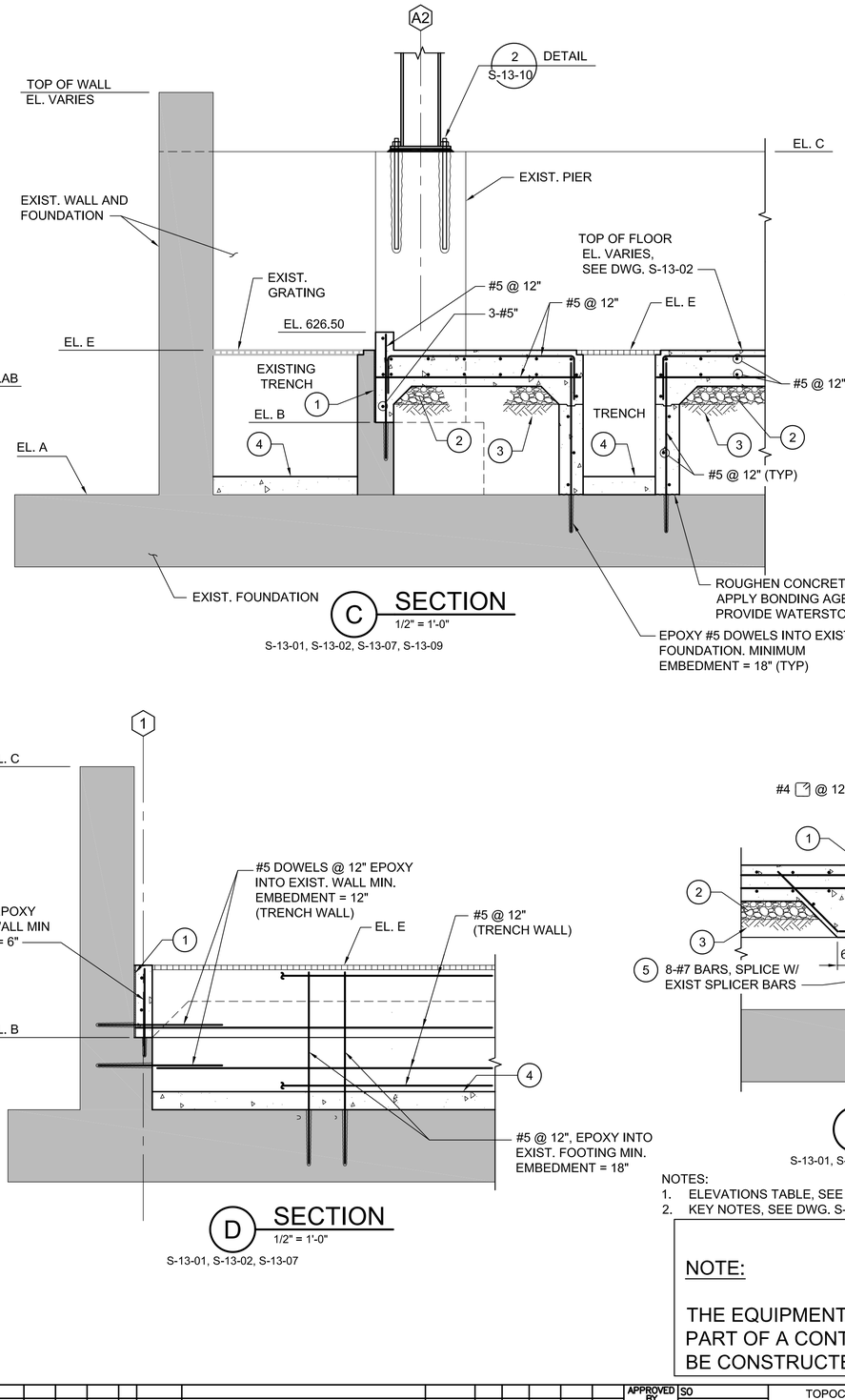

C SECTION
1/2" = 1'-0"
S-13-01, S-13-02, S-13-07, S-13-09

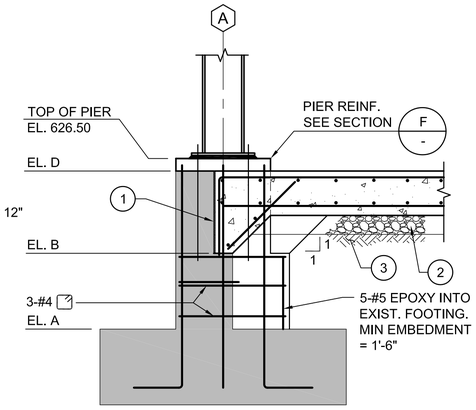

E SECTION
1/2" = 1'-0"
S-13-01, S-13-02, S-13-07

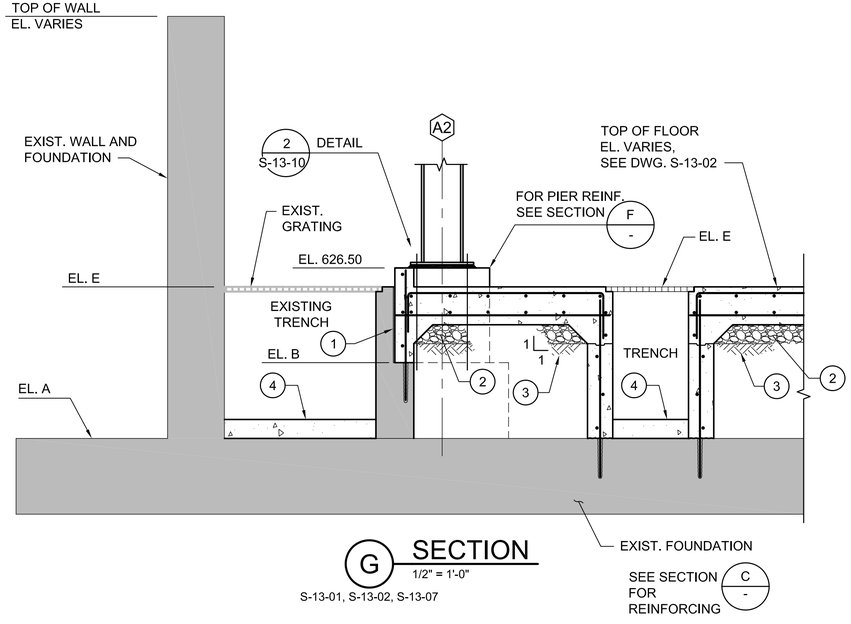

G SECTION
1/2" = 1'-0"
S-13-01, S-13-02, S-13-07

D SECTION
1/2" = 1'-0"
S-13-01, S-13-02, S-13-07

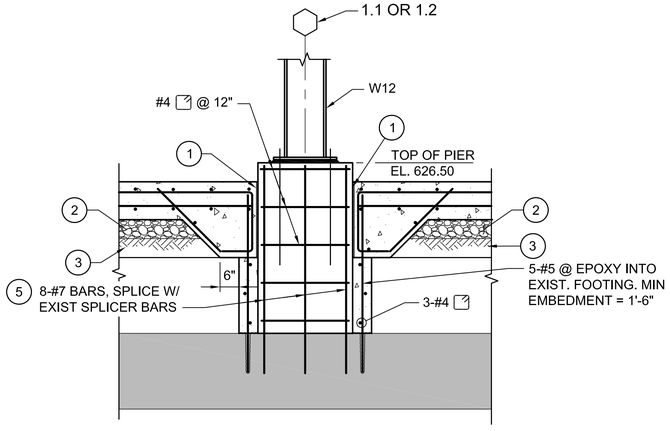

F SECTION
1/2" = 1'-0"
S-13-01, S-13-02, S-13-09

NOTES:
1. ELEVATIONS TABLE, SEE DWG. S-13-07.
2. KEY NOTES, SEE DWG. S-13-07.

- FINAL DESIGN -
FOR AGENCY
APPROVAL ONLY

CONTINGENT

NOTE:

THE EQUIPMENT AND FACILITY SHOWN IS PART OF A CONTINGENT SYSTEM AND MAY BE CONSTRUCTED IN THE FUTURE.

REGISTERED PROFESSIONAL ENGINEER
VINOD M. BADANI
C-041281
EXP. DATE 3/31/17
CIVIL
STATE OF CALIFORNIA

E2 Consulting Engineers, Inc.
1900 Powell Street, Ste. 250
Emeryville, CA 94608
(510) 652-1164

ARCADIS

NO.	DATE	DESCRIPTION	GM/SPEC	DWN	CHKD	SUPV	APVD BY
1	11/18/15	FINAL DESIGN	MD	KJ	VMB	RAO	
0	09/08/14	PRE-FINAL (90%) DESIGN	MD	KJ	VMB	VMB	

REVISIONS

APPROVED BY	
RAO	SO
	SUPV
	DSGN
	DWN
	CHKD
	OK
	DATE
	SCALES 1/2"=1'-0"

TOPOCK GROUNDWATER REMEDIATION PROJECT
FRESH WATER PRE-INJECTION TREATMENT SYSTEM BUILDING SECTIONS
GAS TRANSMISSION & DISTRIBUTION
PACIFIC GAS AND ELECTRIC COMPANY
SAN FRANCISCO, CALIFORNIA

MICROFILM	
BILL OF MATL	
DWG LIST	
SUPSDS	
SUPSD BY	
SHEET NO.	of SHEETS
S-13-08	REV 0

E2-S-XXX-1201.dwg

N1808

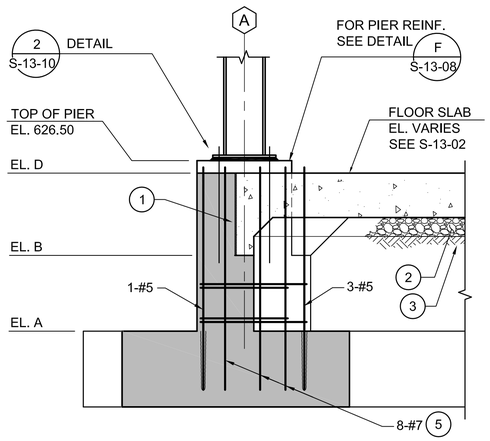

H SECTION
1/2" = 1'-0"

S-13-01, S-13-02, S-13-07

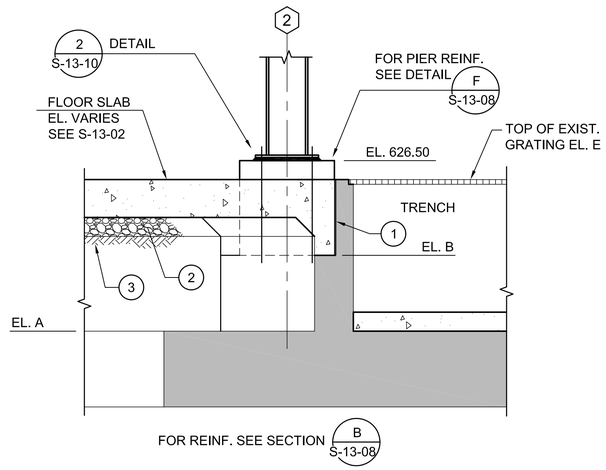

I SECTION
1/2" = 1'-0"

S-13-01, S-13-02, S-13-07

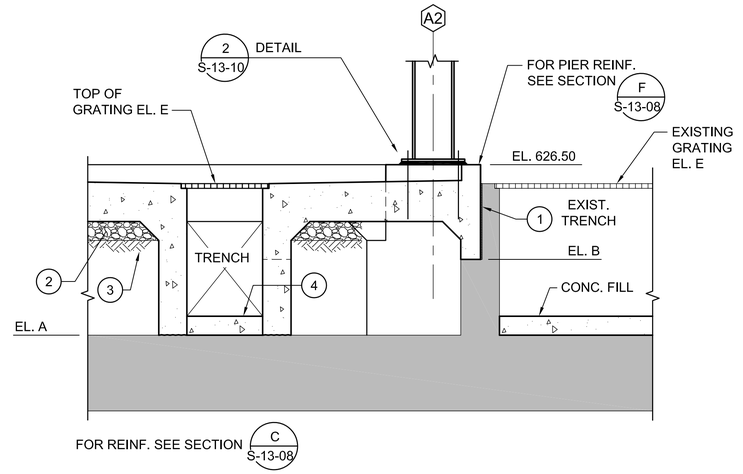

J SECTION
1/2" = 1'-0"

S-13-01, S-13-02, S-13-07

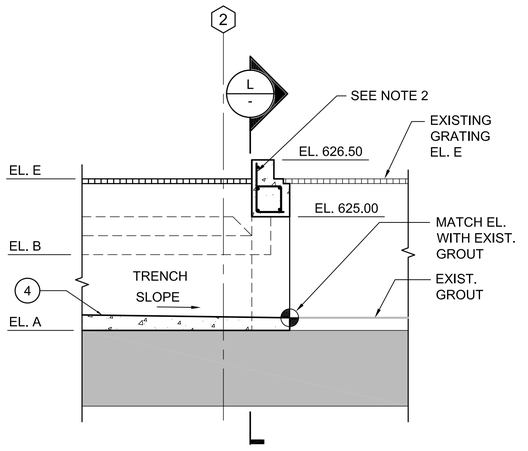

K SECTION
1/2" = 1'-0"

S-13-01, S-13-02, S-13-07

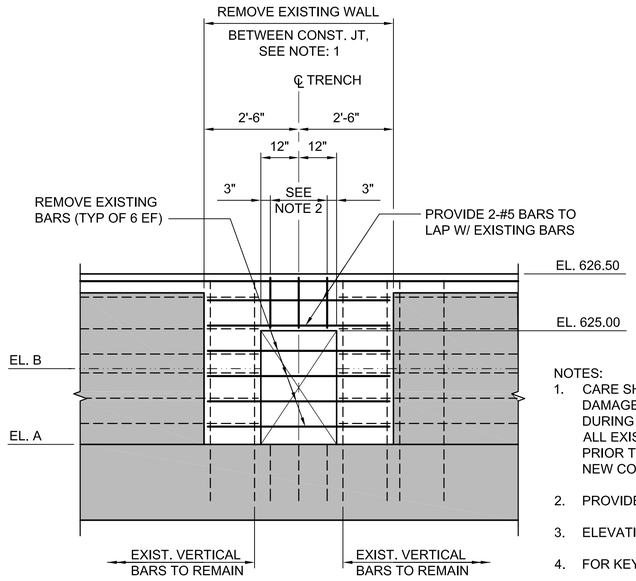

L SECTION
1/2" = 1'-0"

NOTES:
1. CARE SHALL BE TAKEN SO AS NOT TO DAMAGE EXISTING REINFORCING BARS DURING DEMOLITION OF EXISTING WALL. ALL EXISTING BARS SHALL BE CLEANED PRIOR TO INCORPORATING THEM INTO NEW CONSTRUCTION.
2. PROVIDE 3-#4 STIRRUPS ⌐.
3. ELEVATION TABLE, SEE DWG. S-13-07.
4. FOR KEY NOTES, SEE DWG. S-13-07.

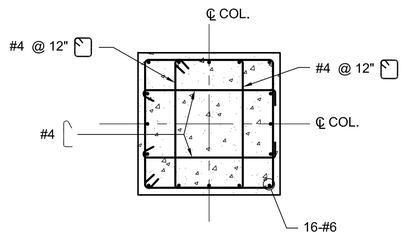

C SECTION
3/4" = 1'-0"

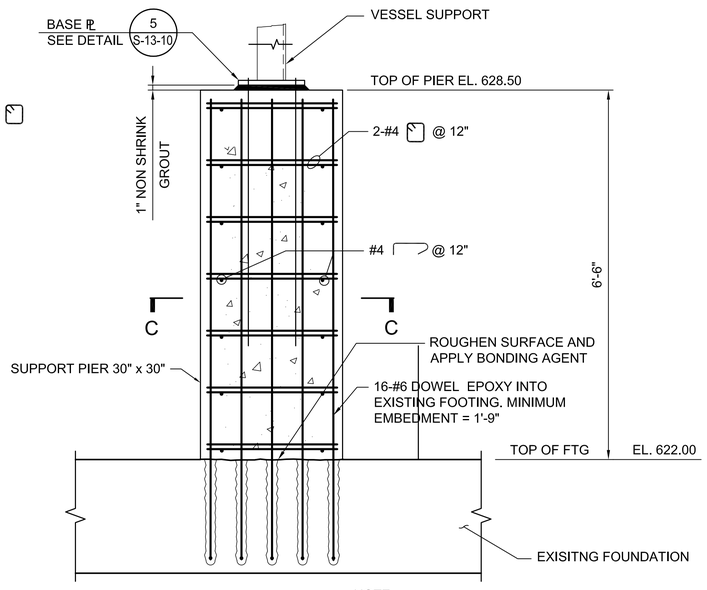

ELEVATION

NOTE:
FLOOR SLAB AND TRENCH NOT SHOWN-SEE SECTION C ON S-13-08

1 DETAIL
3/4" = 1'-0"

S-13-01, S-13-02, S-13-06, S-13-08

CONTINGENT

NOTE:

THE EQUIPMENT AND FACILITY SHOWN IS PART OF A CONTINGENT SYSTEM AND MAY BE CONSTRUCTED IN THE FUTURE.

- FINAL DESIGN -
FOR AGENCY APPROVAL ONLY

REGISTERED PROFESSIONAL ENGINEER
VINOD M. BADANI
C-041281
EXP. DATE 3/31/17
CIVIL
STATE OF CALIFORNIA

E2 Consulting Engineers, Inc.
1900 Powell Street, Ste. 250
Emeryville, CA 94608
(510) 652-1164

ARCADIS

NO.	DATE	DESCRIPTION	GM/SPEC	DWN	CHKD	SUPV	APVD	BY
1	11/18/15	FINAL DESIGN		MD	KJ	VMB	RAO	
0	09/08/14	PRE-FINAL (90%) DESIGN		MD	KJ	VMB	VMB	

REVISIONS

APPROVED BY	
RAO	SO
	SUPV
	DSGN
	DWN
	CHKD
	OK
	DATE
	SCALES

AS NOTED

TOPOCK GROUNDWATER REMEDIATION PROJECT
FRESH WATER PRE-INJECTION TREATMENT SYSTEM BUILDING SECTIONS AND DETAILS
GAS TRANSMISSION & DISTRIBUTION
PACIFIC GAS AND ELECTRIC COMPANY
SAN FRANCISCO, CALIFORNIA

MICROFILM	
BILL OF MATL	
DWG LIST	
SUPSDS	
SUPSD BY	
SHEET NO.	of SHEETS
S-13-09	REV 0

E2-S-XXX-1201.dwg

N1808

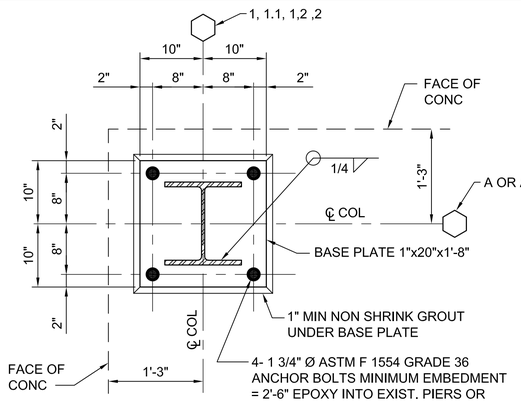

2 DETAIL
1" = 1'-0"
S-13-02, S-13-07, S-13-08

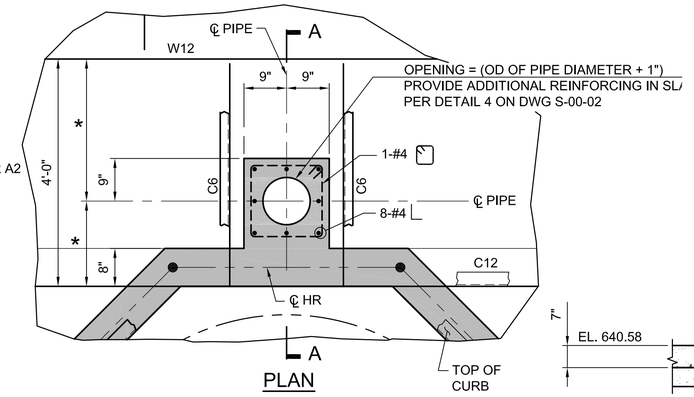

PLAN

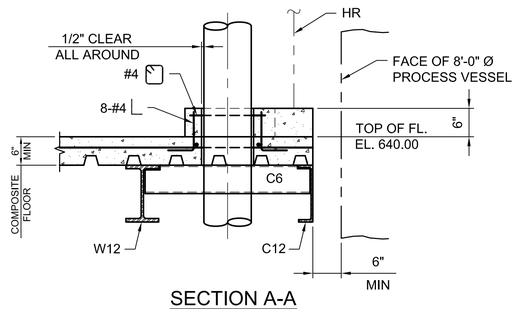

SECTION A-A

3 DETAIL
3/4" = 1'-0"
S-13-04

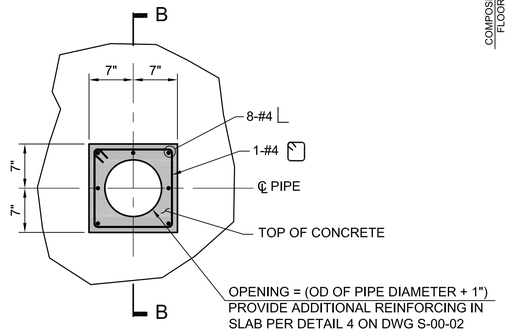

PLAN

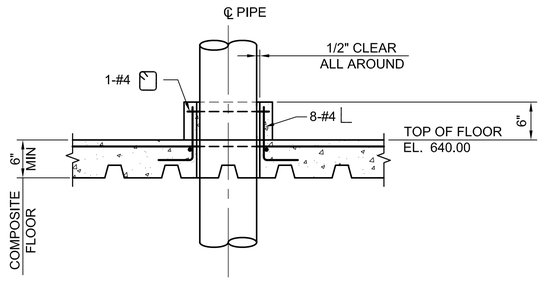

SECTION B-B

4 DETAIL
1" = 1'-0"
S-13-04

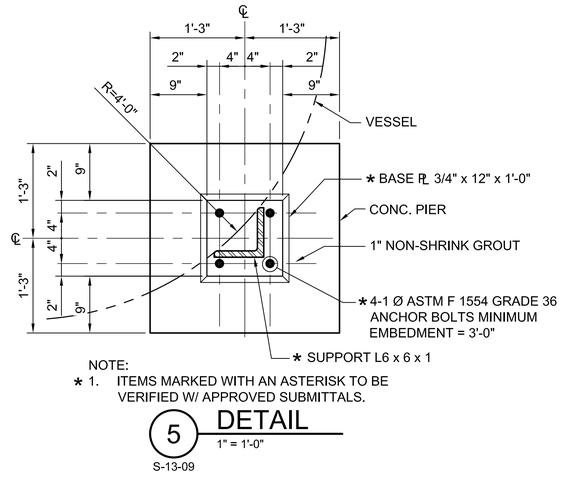

NOTE:
* 1. ITEMS MARKED WITH AN ASTERISK TO BE VERIFIED W/ APPROVED SUBMITTALS.

5 DETAIL
1" = 1'-0"
S-13-09

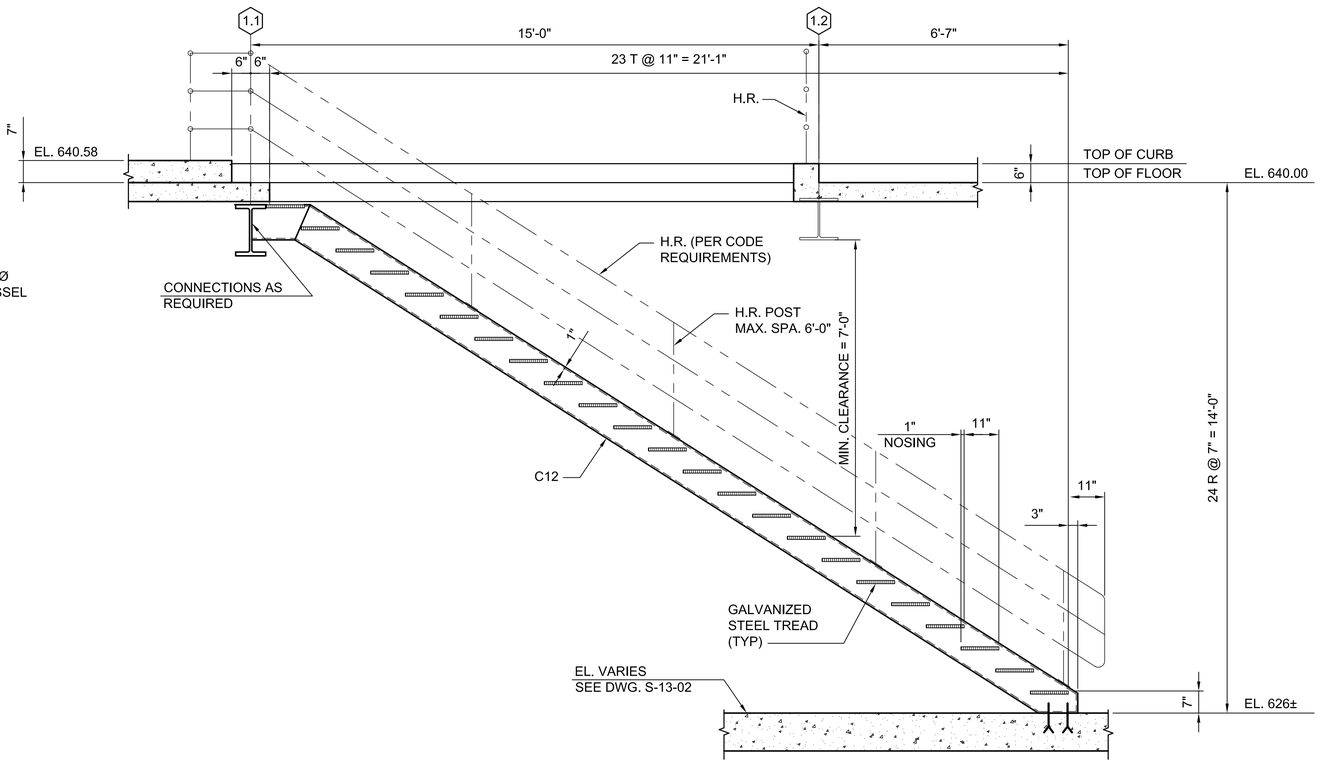

A SECTION
1/2" = 1'-0"
S-13-02, S-13-03, S-13-04

CONTINGENT

NOTE:

THE EQUIPMENT AND FACILITY SHOWN IS PART OF A CONTINGENT SYSTEM AND MAY BE CONSTRUCTED IN THE FUTURE.

- FINAL DESIGN - FOR AGENCY APPROVAL ONLY

REGISTERED PROFESSIONAL ENGINEER
VINOD M. BADANI
C-041281
EXP. DATE 3/31/17
CIVIL
STATE OF CALIFORNIA

E2 Consulting Engineers, Inc.
1900 Powell Street, Ste. 250
Emeryville, CA 94608
(510) 652-1164

ARCADIS

NO.	DATE	DESCRIPTION	GM/SPEC	DWN	CHKD	SUPV	APVD BY
1	11/18/15	FINAL DESIGN		MD	KJ	VMB	RAO
0	09/08/14	PRE-FINAL (90%) DESIGN		MD	KJ	VMB	VMB

REVISIONS

APPROVED BY	SO
RAO	SUPV
	DSGN
	DWN
	CHKD
	OK
	DATE
	SCALES AS NOTED

TOPOCK GROUNDWATER REMEDIATION PROJECT
FRESH WATER PRE-INJECTION TREATMENT SYSTEM BUILDING SECTIONS AND DETAILS
GAS TRANSMISSION & DISTRIBUTION
PACIFIC GAS AND ELECTRIC COMPANY
SAN FRANCISCO, CALIFORNIA

MICROFILM	
BILL OF MATL	
DWG LIST	
SUPSDS	
SUPSD BY	
SHEET NO.	of SHEETS
S-13-10	REV 0

E2-S-XXX-1203.dwg

N180B

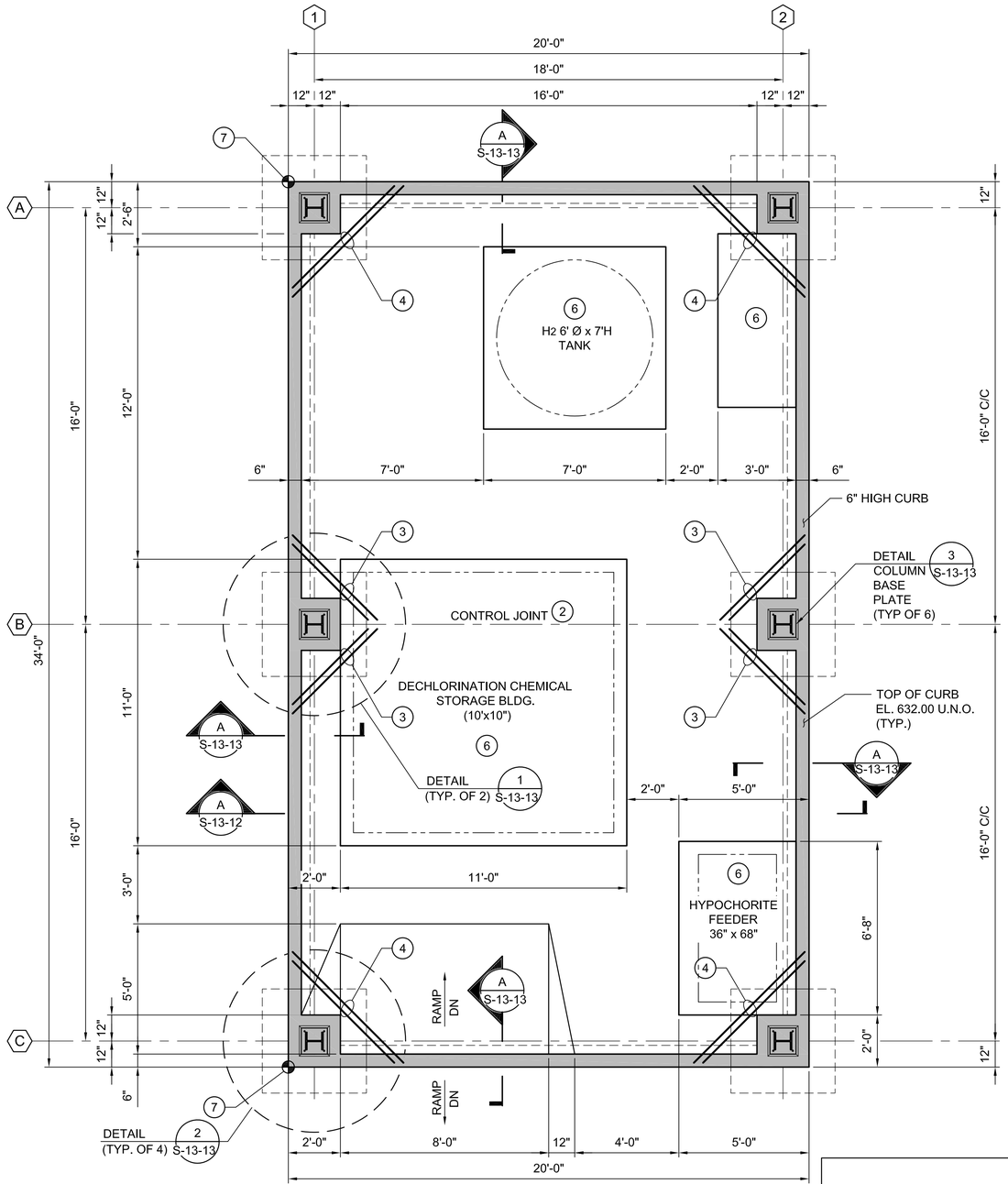

FOUNDATION AND FLOOR PLAN

3/8" = 1'-0"

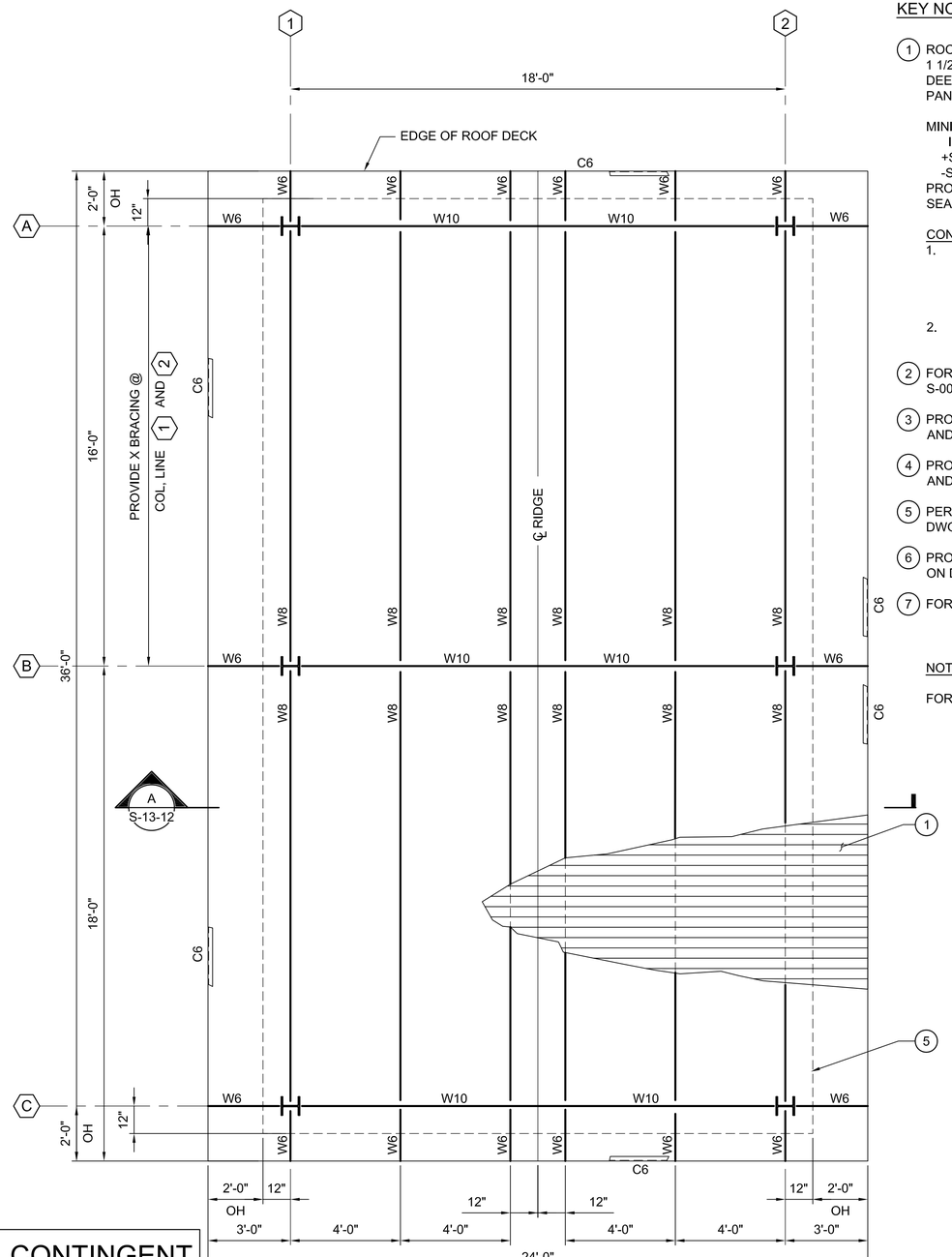

ROOF PLAN

3/8" = 1'-0"

KEY NOTES:

1. ROOF CONSTRUCTION:
   1 1/2" METAL ROOF DECK, ROOF DECK: 1 1/2" DEEP X 36" WIDE PANEL (6 RIBS @ 6" C/C PER PANEL) GALVANIZED. (18 GAUGE)

   MINIMUM PROPERTIES/LF OF WIDTH:
   I = 0.29 IN /LF
   +S = 0.315 IN /LF
   -S = 0.316 IN /LF
   PROVIDE 2" RIGID INSULATION AND STANDING SEAM ROOF PANELS.

   CONNECTION:
   1. USE #2 GALVANIZED SCREWS OR 1/2"Ø PUDDLE WELDS AT 6" C/C (6 PER SHEET MIN. FOR 36" WIDE PANELS) TO ATTACH ROOF DECK TO SUPPORTING MEMBERS.
   2. USE # 2 GALVANIZED SCREWS @ 12" C/C FOR SIDE CONNECTIONS.
2. FOR CONTROL JOINT, SEE DETAIL 7, DWG. S-00-02.
3. PROVIDE ADDITIONAL (2) #5 x 6'-0" AT 3" C/C TOP AND BOTTOM, TYP. 4 PLACES.
4. PROVIDE ADDITIONAL (2) #5 x 6'-0" AT 3" C/C TOP AND BOTTOM, TYP. 4 PLACES.
5. PERIMETER METAL SIDING, SEE SECTION A ON DWG. S-13-12.
6. PROVIDE 6" HIGH CONCRETE PAD, PER DETAIL 9 ON DWG. S-00-02.
7. FOR COORDINATES SEE DWG. C-10-03.

NOTE:

FOR DESIGN LOADS, SEE DWG S-13-12.

CONTINGENT

NOTE:

THE EQUIPMENT AND FACILITY SHOWN IS PART OF A CONTINGENT SYSTEM AND MAY BE CONSTRUCTED IN THE FUTURE.

- FINAL DESIGN - FOR AGENCY APPROVAL ONLY

REGISTERED PROFESSIONAL ENGINEER VINOD M. BADANI C-041281 EXP. DATE 3/31/17 CIVIL STATE OF CALIFORNIA

E2 Consulting Engineers, Inc.
1900 Powell Street, Ste. 250
Emeryville, CA 94608
(510) 652-1164

ARCADIS

NO.	DATE	DESCRIPTION	GM/SPEC	DWN	CHKD	SUPV	APVD BY
1	11/18/15	FINAL DESIGN		MD	KJ	VMB	RAO
0	09/08/14	PRE-FINAL (90%) DESIGN		MD	KJ	VMB	VMB

REVISIONS

APPROVED BY	RAO
SO	
SUPV	
DSGN	
DWN	
CHKD	
OK	
DATE	
SCALES	3/8"=1'-0"

TOPOCK GROUNDWATER REMEDIATION PROJECT
CHEMICAL STORAGE AREA FOUNDATION, FLOOR AND ROOF PLAN
GAS TRANSMISSION & DISTRIBUTION
PACIFIC GAS AND ELECTRIC COMPANY
SAN FRANCISCO, CALIFORNIA

MICROFILM	
BILL OF MATL	
DWG LIST	
SUPSDS	
SUPSD BY	
SHEET NO.	of SHEETS
S-13-11	REV 0

E2-S-XXX-1201.dwg

N1808

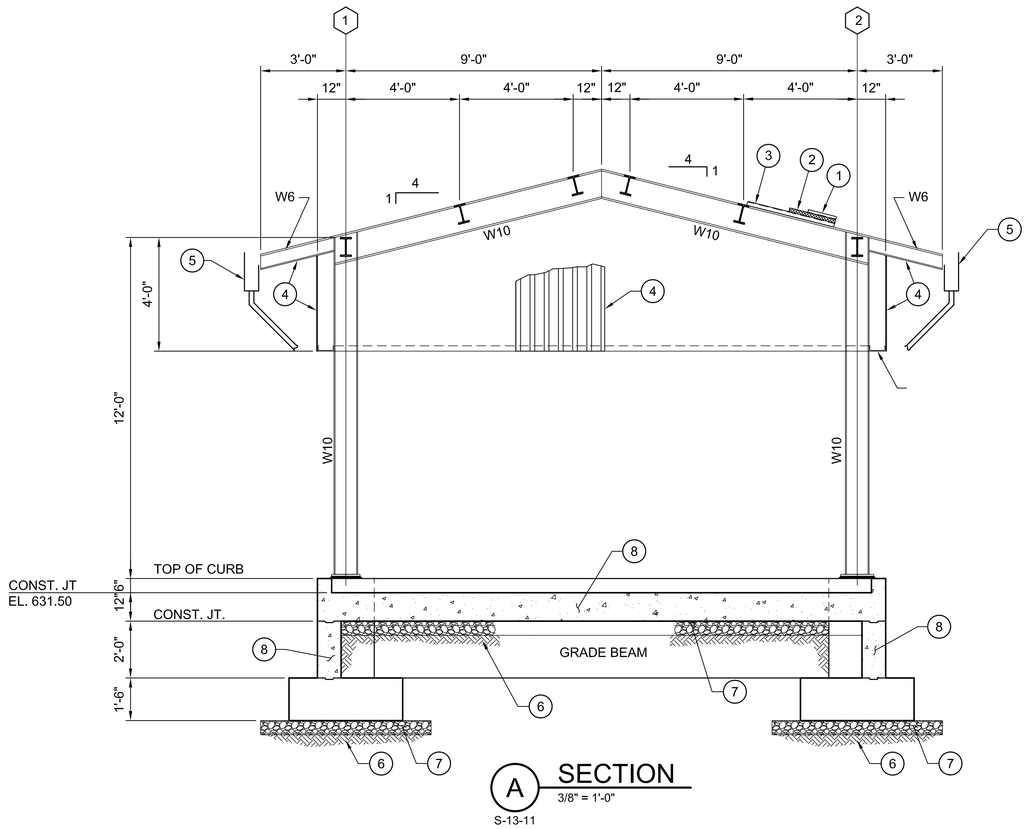

A SECTION
3/8" = 1'-0"
S-13-11

KEY NOTES:

1. STANDING SEAM ROOF.
2. 2" RIGID INSULATION.
3. METAL ROOF DECK, SEE DWG. S-13-05.
4. METAL SIDING: 3/4" DEEP X 36" WIDE PANEL (6 RIBS @ 6" C/C PER PANEL) GALVANIZED, (24 GAUGE) MINIMUM PROPERTIES/LF OF WIDTH:
   +I = 0.0323 IN
   -I = 0.0220 IN
   +S = 0.0592 IN
   -S = 0.0538 IN
5. SEE ARCHITECTURAL DRAWINGS FOR GUTTER AND DOWNSPOUT REQUIREMENTS.
6. SUBGRADE - COMPACTED TO 95% PER ASTM D 1557.
7. 6"THICK, CRUSHED ROCK. EXTEND MINIMUM 12" BEYOND THE FACE OF FOUNDATION.
8. FOR REINFORCING, SEE SECTION A ON DWG. S-13-13.

DESIGN LOADS

1. WIND LOADS

DESIGN HORIZONTAL WIND LOADS ON VERTICAL SURFACES:
20 PSF (MINIMUM)
BASIC WIND SPEED: 100 MPH
IMPORTANCE FACTOR: 1.25

2. SEISMIC LOADS

CBC, 2013 SITE CLASS: D
SEISMIC DESIGN CATEGORY: D

S_s = 0.230
S_1 = 0.120
S_{MS} = 0.368
S_{M1} = 0.279
S_{DS} = 0.245
S_{D1} = 0.168
IMPORTANCE FACTOR: 1.25

CONTINGENT

NOTE:

THE EQUIPMENT AND FACILITY SHOWN IS PART OF A CONTINGENT SYSTEM AND MAY BE CONSTRUCTED IN THE FUTURE.

- FINAL DESIGN - FOR AGENCY APPROVAL ONLY

REGISTERED PROFESSIONAL ENGINEER
VINOD M. BADANI
C-041281
EXP. DATE 3/31/17
CIVIL
STATE OF CALIFORNIA

E2 Consulting Engineers, Inc.
1900 Powell Street, Ste. 250
Emeryville, CA 94608
(510) 652-1164

ARCADIS

NO.	DATE	DESCRIPTION	GM/SPEC	DWN	CHKD	SUPV	APVD BY
1	11/18/15	FINAL DESIGN		MD	KJ	VMB	RAO
0	09/08/14	PRE-FINAL (90%) DESIGN		MD	KJ	VMB	VMB

REVISIONS

APPROVED BY	
RAO	SO
	SUPV
	DSGN
	DWN
	CHKD
	OK
	DATE
	SCALES 3/8"=1'-0"

TOPOCK GROUNDWATER REMEDIATION PROJECT
CHEMICAL STORAGE AREA SECTION
GAS TRANSMISSION & DISTRIBUTION
PACIFIC GAS AND ELECTRIC COMPANY
SAN FRANCISCO, CALIFORNIA

MICROFILM	
BILL OF MATL	
DWG LIST	
SUPSDS	
SUPSD BY	
SHEET NO.	of SHEETS
S-13-12	REV 0

E2-S-XXX-1207.dwg

N1808

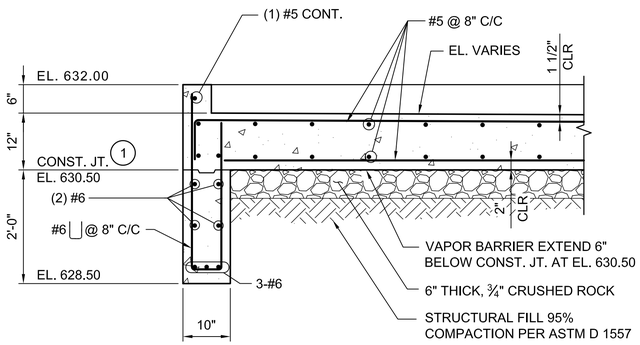

A SECTION AT CURB/GRADE BEAM

3/4" = 1'-0"

S-13-11

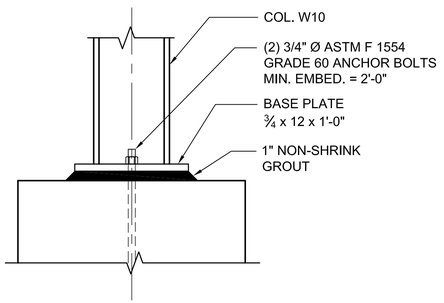

ELEVATION

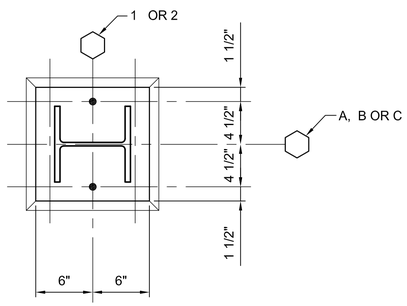

PLAN

3 DETAIL - BASE PLATE

1 1/2" = 1'-0"

S-13-11

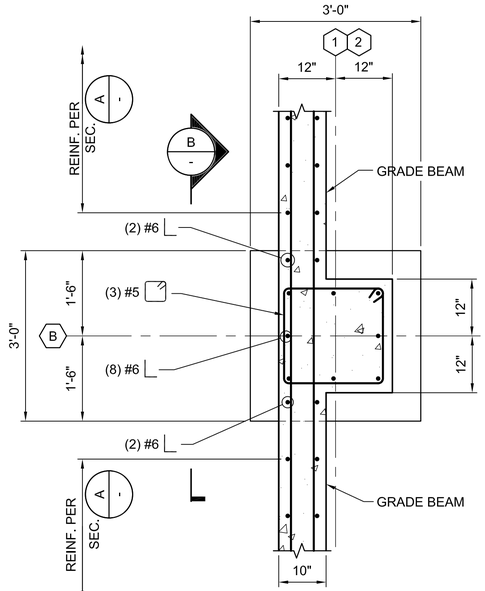

1 DETAIL - COLUMN BASE

3/4" = 1'-0"

S-13-11

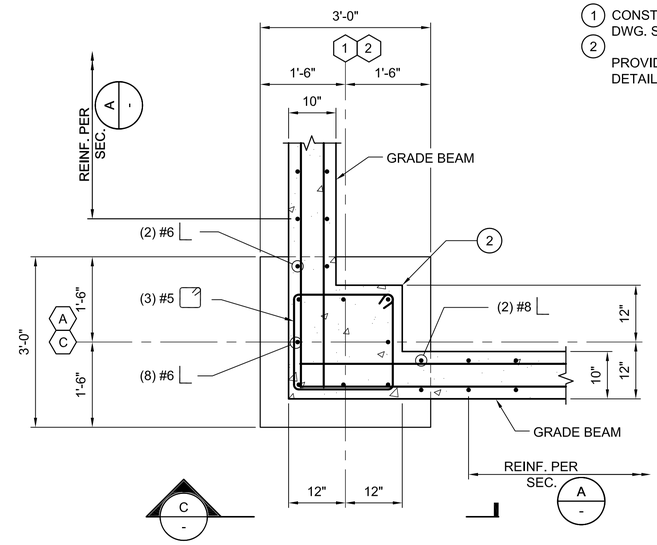

2 DETAIL - CORNER BASE

3/4" = 1'-0"

S-13-11

KEY NOTES:

1. CONSTRUCTIN JOINT, SEE DETAIL 1, DWG. S-00-02.
2. PROVIDE CORNER REINFORCING, SEE DETAIL 5, DWG. S-00-02.

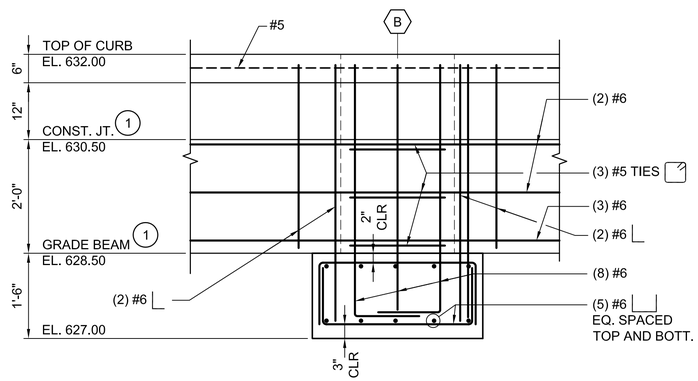

B SECTION

3/4" = 1'-0"

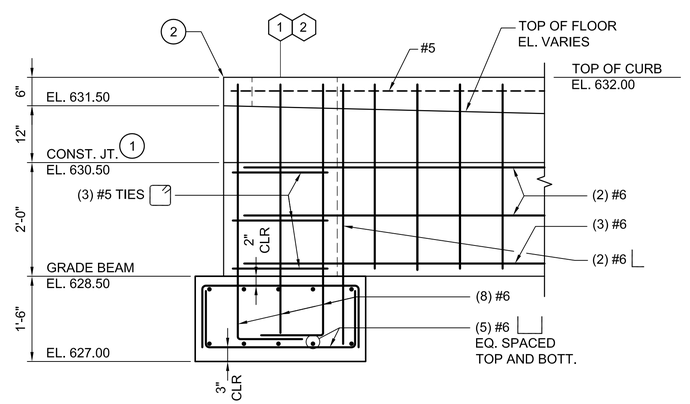

C SECTION

3/4" = 1'-0"

CONTINGENT

NOTE:

THE EQUIPMENT AND FACILITY SHOWN IS PART OF A CONTINGENT SYSTEM AND MAY BE CONSTRUCTED IN THE FUTURE.

- FINAL DESIGN - FOR AGENCY APPROVAL ONLY

REGISTERED PROFESSIONAL ENGINEER VINOD M. BADANI C-041281 EXP. DATE 3/31/17 CIVIL STATE OF CALIFORNIA

E2 Consulting Engineers, Inc.
1900 Powell Street, Ste. 250
Emeryville, CA 94608
(510) 652-1164

ARCADIS

NO.	DATE	DESCRIPTION	GM/SPEC	DWN	CHKD	SUPV	APVD BY
1	11/18/15	FINAL DESIGN	MD	KJ	VMB	RAO	
0	09/08/14	PRE-FINAL (90%) DESIGN	MD	KJ	VMB		

REVISIONS

APPROVED BY	RAO
SO	
SUPV	VMB
DSGN	KDD
DWN	MD
CHKD	KJ
OK VMB	
DATE	6/30/14
SCALES	AS NOTED

TOPOCK GROUNDWATER REMEDIATION PROJECT

CHEMICAL STORAGE AREA SECTIONS AND DETAILS

GAS TRANSMISSION & DISTRIBUTION
PACIFIC GAS AND ELECTRIC COMPANY
SAN FRANCISCO, CALIFORNIA

MICROFILM	
BILL OF MATL	
DWG LIST	
SUPSDS	
SUPSD BY	
SHEET NO.	of SHEETS
S-13-13	REV 0

E2-S-XXX-1207.dwg

N1808

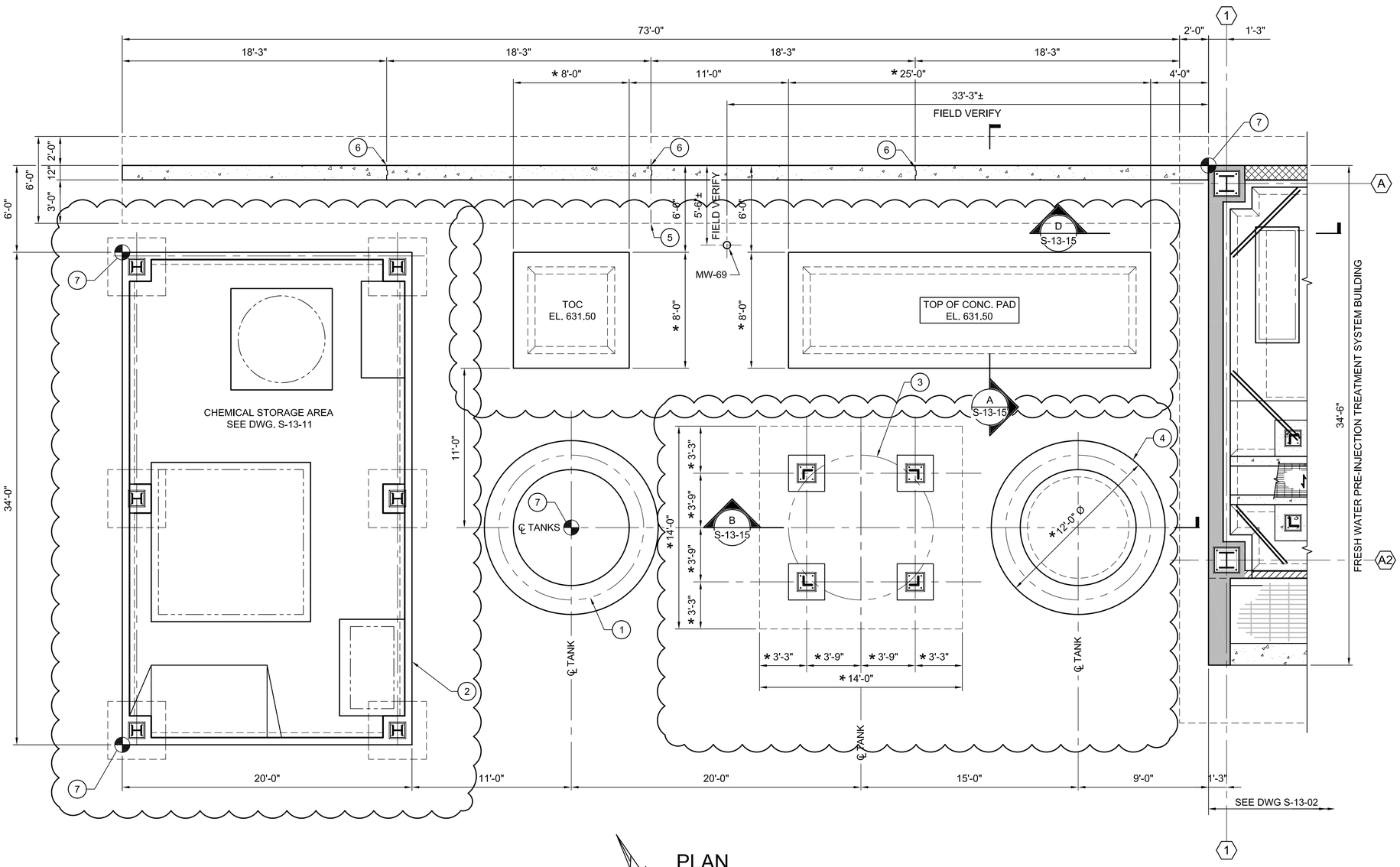

PLAN
1/4" = 1'-0"

KEY NOTES:

1. REMEDY FRESH WATER TANK, SEE DWG. S-02-03.
2. CHEMICAL STORAGE AREA, SEE DWG. S-13-11.
3. BACKWASH TANK-1601.
4. TREATED WATER STORAGE TANK-1501.
5. FOUNDATION VERTICAL CONSTRUCTION JOINT, SEE DETAIL 2 ON DWG. S-00-02.
6. WALL VERTICAL CONSTRUCTION JOINT W/O WATERSTOP, SEE DETAIL 3 ON DWG. S-00-02.
7. FOR COORIDINATES, SEE DWG C-10-02 AND C-10-03.

NOTES:

1. FOR GENERAL STRUCTURAL NOTES, SEE DWG. S-00-01.

* 2. DIMENSIONS MARKED WITH AN ASTERISK ARE TO BE VERIFIED WITH MANUFACTURER'S APPROVED SUBMITTALS.

DESIGN LOADS

1. WIND LOADS

DESIGN HORIZONTAL WIND LOADS ON VERTICAL SURFACES:
20 PSF (MINIMUM)
BASIC WIND SPEED: 100 MPH
IMPORTANCE FACTOR: 1.25

2. SEISMIC LOADS

CBC, 2013 SITE CLASS: D
SEISMIC DESIGN CATEGORY: D

S_S = 0.230
S_1 = 0.120
S_{MS} = 0.368
S_{M1} = 0.279
S_{DS} = 0.245
S_{D1} = 0.168
IMPORTANCE FACTOR: 1.25

CONTINGENT

NOTE:

THE EQUIPMENT AND FACILITY SHOWN CLOUDED IS PART OF A CONTINGENT SYSTEM AND MAY BE CONSTRUCTED IN THE FUTURE.

- FINAL DESIGN - FOR AGENCY APPROVAL ONLY

REGISTERED PROFESSIONAL ENGINEER
VINOD M. BADANI
C-041281
EXP. DATE 3/31/17
CIVIL
STATE OF CALIFORNIA

E2 Consulting Engineers, Inc.
1900 Powell Street, Ste. 250
Emeryville, CA 94608
(510) 652-1164

ARCADIS

NO.	DATE	DESCRIPTION	GM/SPEC	DWN	CHKD	SUPV	APVD BY
1	11/18/15	FINAL DESIGN	MD	KJ	VMB	RAO	
0	09/08/14	PRE-FINAL (90%) DESIGN	MD	KJ	VMB	VMB	

REVISIONS

APPROVED BY	
RAO	
SO	
SUPV	
DSGN	
DWN	
CHKD	
OK	
DATE	
SCALES	1/4"=1'-0"

TOPOCK GROUNDWATER REMEDIATION PROJECT
BACKWASH AND TREATED WATER STORAGE TANKS PLAN
GAS TRANSMISSION & DISTRIBUTION
PACIFIC GAS AND ELECTRIC COMPANY
SAN FRANCISCO, CALIFORNIA

MICROFILM	
BILL OF MATL	
DWG LIST	
SUPSDS	
SUPSD BY	
SHEET NO.	of SHEETS
S-13-14	REV 0

E2-S-XXX-1201.dwg

N1808

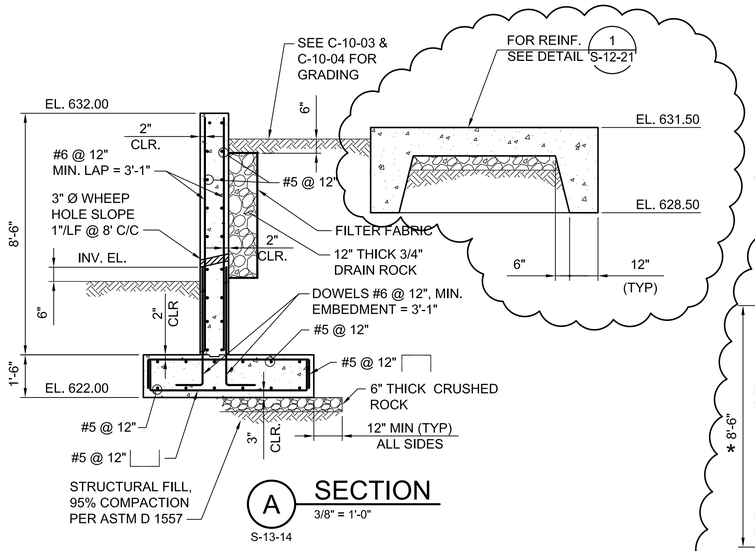

A SECTION
3/8" = 1'-0"
S-13-14

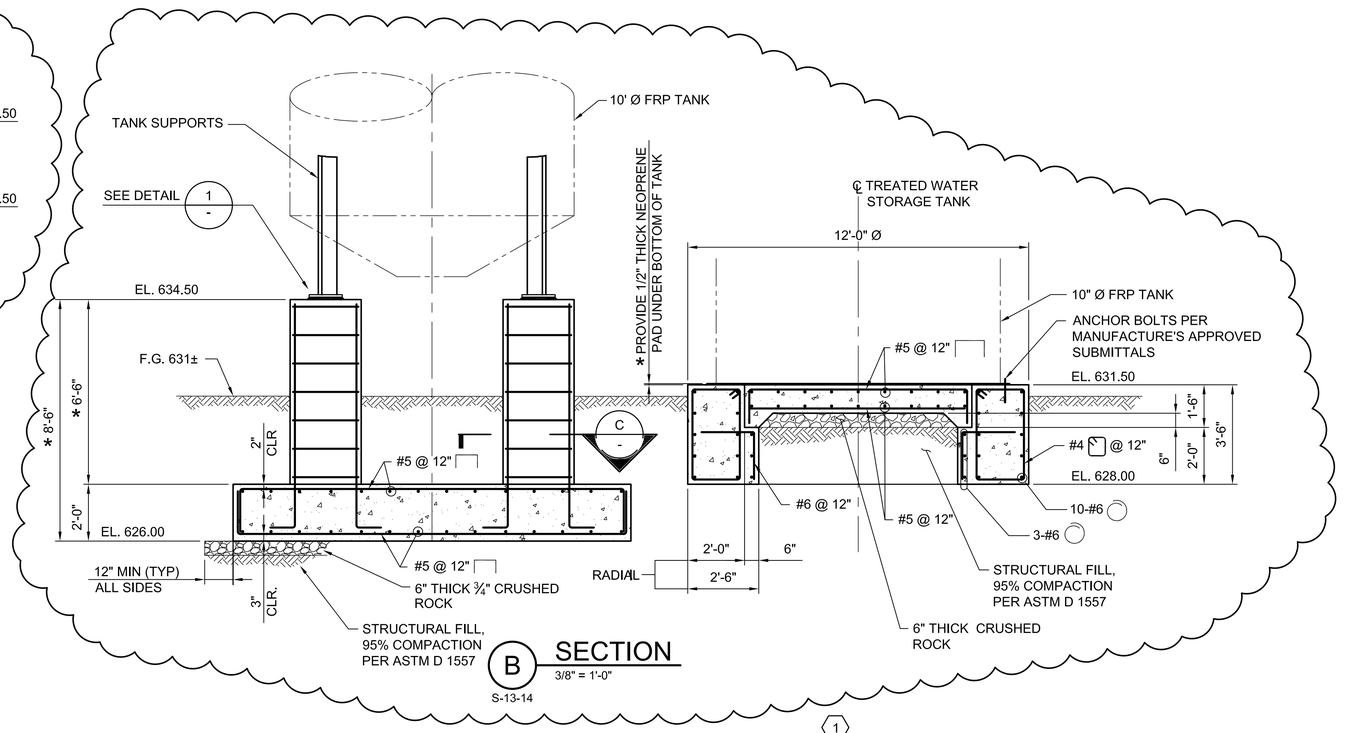

B SECTION
3/8" = 1'-0"
S-13-14

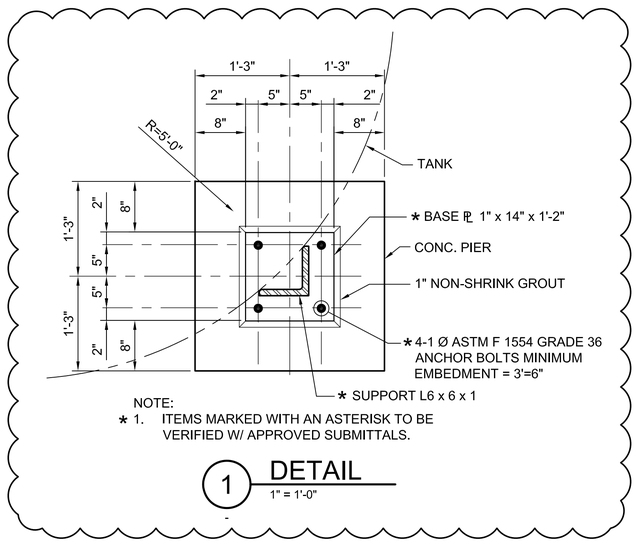

1 DETAIL
1" = 1'-0"

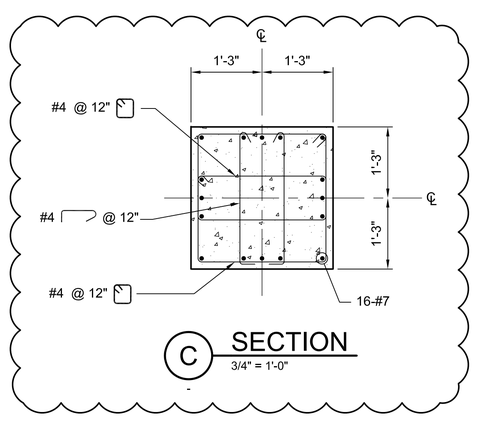

C SECTION
3/4" = 1'-0"

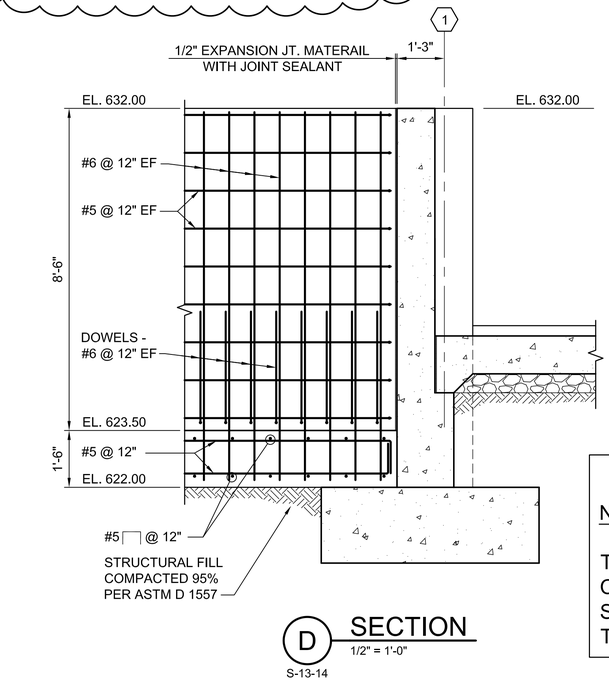

D SECTION
1/2" = 1'-0"
S-13-14

CONTINGENT

NOTE:

THE EQUIPMENT AND FACILITY SHOWN CLOUDED IS PART OF A CONTINGENT SYSTEM AND MAY BE CONSTRUCTED IN THE FUTURE.

- FINAL DESIGN - FOR AGENCY APPROVAL ONLY

REGISTERED PROFESSIONAL ENGINEER
VINOD M. BADANI
C-041281
EXP. DATE 3/31/17
CIVIL
STATE OF CALIFORNIA

E2 Consulting Engineers, Inc.
1900 Powell Street, Ste. 250
Emeryville, CA 94608
(510) 652-1164

ARCADIS

NO.	DATE	DESCRIPTION	GM/SPEC	DWN	CHKD	SUPV	APVD BY
1	11/18/15	FINAL DESIGN	MD	KJ	VMB	RAO	
0	09/08/14	PRE-FINAL (90%) DESIGN	MD	KJ	VMB	VMB	

REVISIONS

APPROVED BY	RAO
SO	
SUPV	VMB
DSGN	KJ/KDD
DWN	MD
CHKD	VMB
OK	VMB
DATE	6/30/14
SCALES	AS NOTED

TOPOCK GROUNDWATER REMEDIATION PROJECT
BACKWASH AND TREATED WATER STORAGE TANKS SECTIONS AND DETAILS
GAS TRANSMISSION & DISTRIBUTION
PACIFIC GAS AND ELECTRIC COMPANY
SAN FRANCISCO, CALIFORNIA

MICROFILM	
BILL OF MATL	
DWG LIST	
SUPSDS	
SUPSD BY	
SHEET NO.	of SHEETS
S-13-15	REV 0

E2-S-XXX-1201.dwg

N1808

NOTES:
1. MUST MAINTAIN 5' CLEARANCE MINIMUM AROUND MONITORING WELL MW-69.

CHEMICAL STORAGE AREA

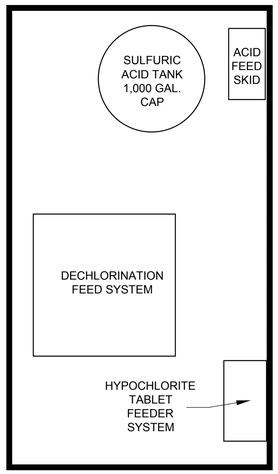

MW-69

BOOSTER PUMPS

REMEDY FRESHWATER STORAGE TANK 10,000 GAL. CAP

PROCESS TANKS AREA

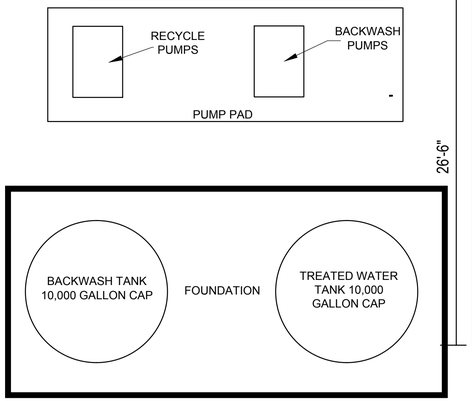

FRESHWATER PRE-INJECTION TREATMENT SYSTEM BUILDING

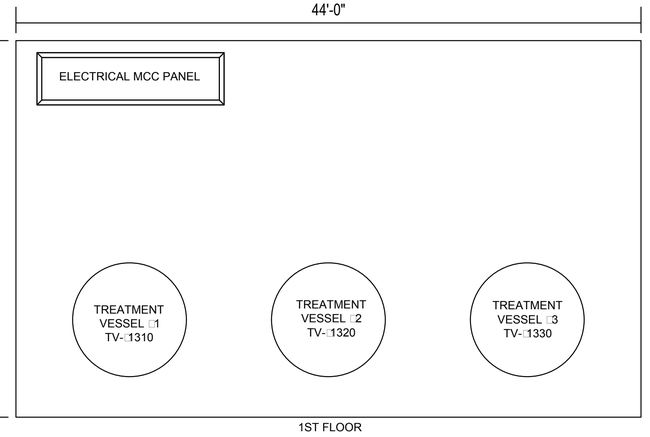

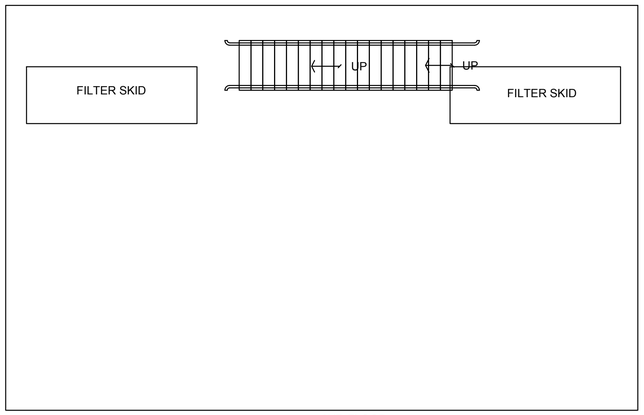



0 20 40 60

SCALE:

NOTE:
SCALE APPLIES WITHIN BUILDINGS AND ON FOUNDATIONS. SPACE BETWEEN STRUCTURES IS APPROXIMATE. SEE DWGS M-13-01 TO M-13-09.

CONTINGENT

NOTES:
1. THE EQUIPMENT AND FACILITY SHOWN IS PART OF A CONTINGENT SYSTEM AND MAY BE CONSTRUCTED IN THE FUTURE.

- FINAL DESIGN -
FOR AGENCY APPROVAL ONLY

REGISTERED PROFESSIONAL ENGINEER BENJAMIN J. WUESTL C 67811 EXP 6/30/17 STATE OF CALIFORNIA

ETIC ENGINEERING

ARCADIS

NO.	DATE	DESCRIPTION	GM/SPEC	DWN	CHKD	SUPV	APVD BY
2	11/18/15	FINAL DESIGN		AJW	KLD	BW	RAO
1	09/2014	PRE-FINAL 90% DESIGN		DC	WF	JP	CH
0	04/2013	INTERMEDIATE 60% DESIGN		JP	PM	JP	CH

REVISIONS

APPROVED BY: RAO

SO
SUPV
DSGN
DWN
CHKD
OK
DATE
SCALES

TOPOCK GROUNDWATER REMEDIATION PROJECT
FRESHWATER PRE-INJECTION TREATMENT SYSTEM EQUIPMENT GENERAL ARRANGEMENT
GAS TRANSMISSION & DISTRIBUTION
PACIFIC GAS AND ELECTRIC COMPANY
SAN FRANCISCO, CALIFORNIA

MICROFILM
BILL OF MATL
DWG LIST
SUPSDS
SUPSD BY
SHEET NO. M-13-00 of SHEETS
REV 2

11/02/2015, 11:32, G:\Graphics\ARTOPOCK-01Submittal_100%\DWGs\M-Mechanical\M-13-00.dwg, Tab: M-13-00

N180B

LEGEND:

(7) REFERENCE ITEM NUMBER E□UIPMENT SCHEDULE ON SHEET M-13-06.

NOTES:
1. DRAIN LINES WILL BE SHOWN IN A FUTURE SUBMITTAL.
2. FOR PIPE ID AND ABBREVIATION SCHEDULE. SEE C-00-12.

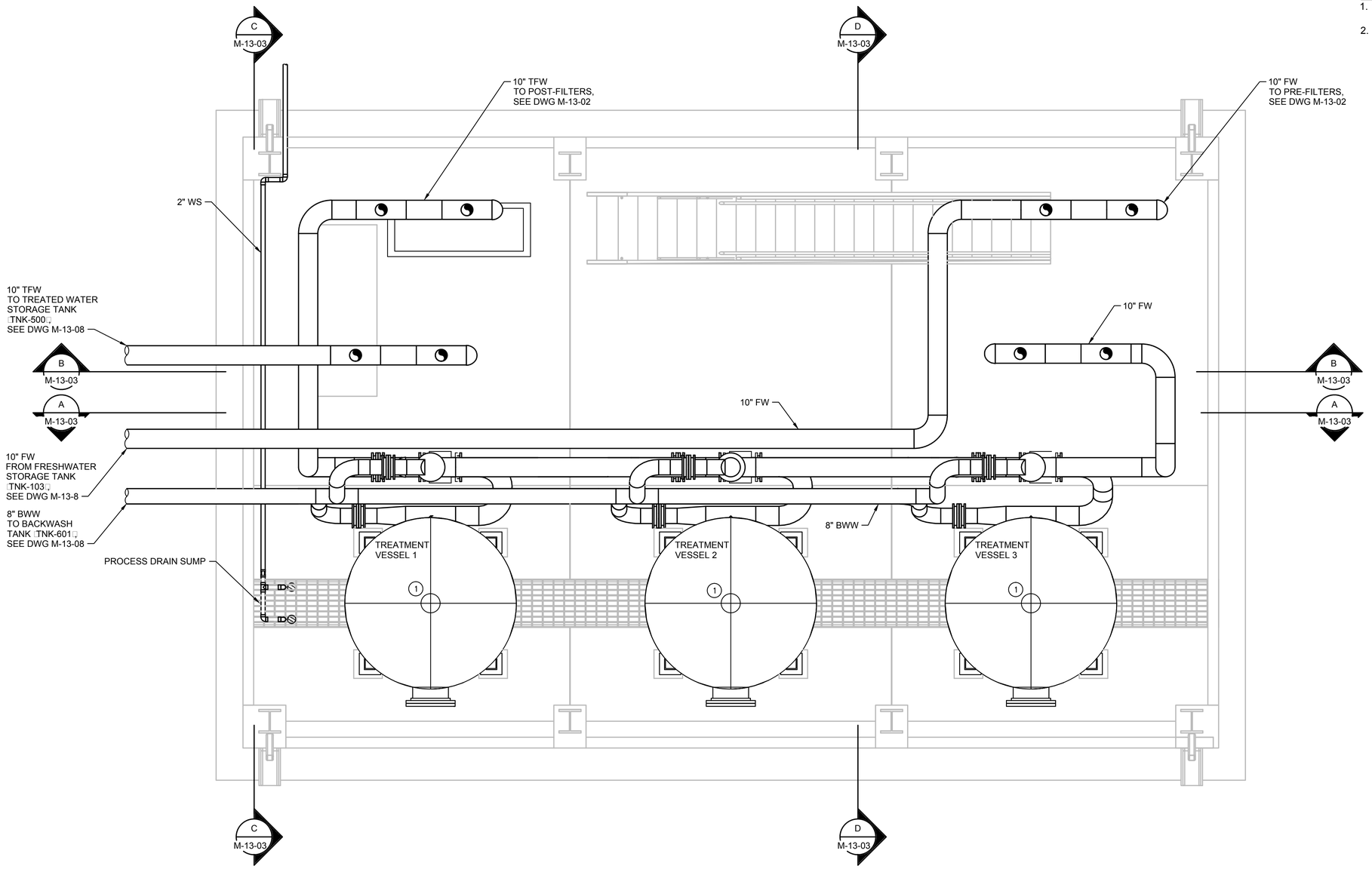

LOWER PLAN
3/8"=1'-0"

0 1 2 3
SCALE: 3/8"=1'

CONTINGENT

NOTES:
1. THE E□UIPMENT AND FACILITY SHOWN IS PART OF A CONTINGENT SYSTEM AND MAY BE CONSTRUCTED IN THE FUTURE.

- FINAL DESIGN -
FOR AGENCY APPROVAL ONLY

REGISTERED PROFESSIONAL ENGINEER
BENJAMIN J. WUERL
C 67811
EXP 6/30/17
STATE OF CALIFORNIA

ETIC ENGINEERING

ARCADIS

NO.	DATE	DESCRIPTION	GM/SPEC	DWN	CHKD	SUPV	APVD	BY
1	11/18/15	FINAL DESIGN		AJW	KLD	BW	RAO	
0	9/8/14	PRE-FINAL □90%□ DESIGN		DS	WF	JP	CH	

REVISIONS

APPROVED BY	
	SO
RAO	SUPV
	DSGN
	DWN
	CHKD
	OK
	DATE
	SCALES

TOPOCK GROUNDWATER REMEDIATION PROJECT

FRESHWATER PRE-INJECTION TREATMENT MEDIA VESSEL SYSTEM - LOWER PLAN

GAS TRANSMISSION & DISTRIBUTION
PACIFIC GAS AND ELECTRIC COMPANY
SAN FRANCISCO, CALIFORNIA

MICROFILM	
BILL OF MATL	
DWG LIST	
SUPSDS	
SUPSD BY	
SHEET NO.	of SHEETS
M-13-01	REV 1

N1808

11/02/2015, 11:35, G:\Graphics\ART\TOPOCK-011Submittal_100%\DWGs\M-Mechanical\M-13-01.dwg, Tab: M-13-01

LEGEND:

(7) REFERENCE ITEM NUMBER EQUIPMENT SCHEDULE ON SHEET M-13-06.

NOTES:
1. DRAIN LINES WILL BE SHOWN IN A FUTURE SUBMITTAL.
2. FOR PIPE ID AND ABBREVIATION SCHEDULE. SEE C-00-12.

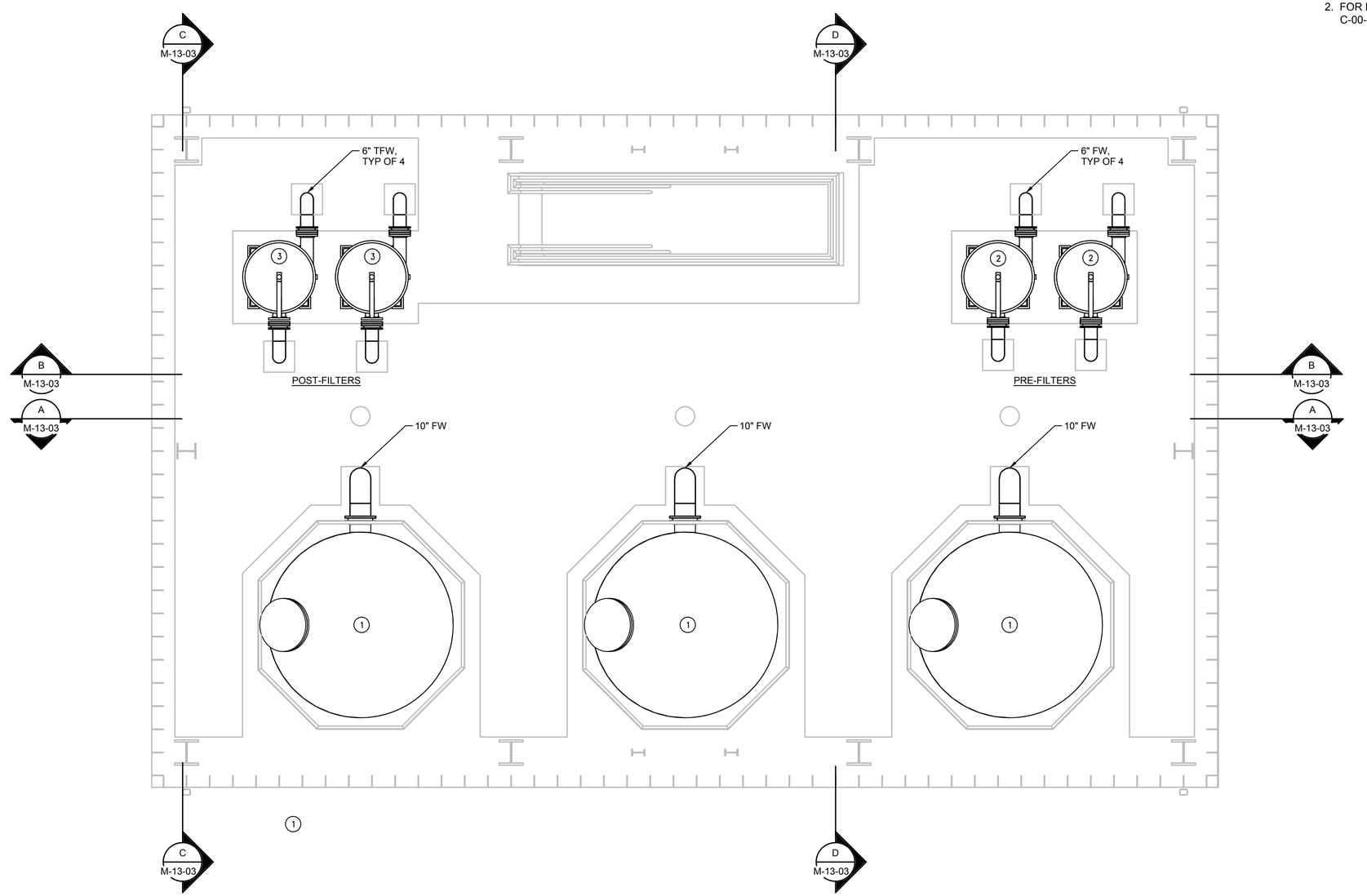

UPPER PLAN
3/8"=1'-0"

SCALE: 3/8"=1'

CONTINGENT

NOTES:
1. THE EQUIPMENT AND FACILITY SHOWN IS PART OF A CONTINGENT SYSTEM AND MAY BE CONSTRUCTED IN THE FUTURE.

- FINAL DESIGN -
FOR AGENCY APPROVAL ONLY

REGISTERED PROFESSIONAL ENGINEER
BENJAMIN J. WUESTL
C 67811
EXP 6/30/17
STATE OF CALIFORNIA

ETIC ENGINEERING

ARCADIS

NO.	DATE	DESCRIPTION	GM/SPEC	DWN	CHKD	SUPV	APVD BY
1	11/18/15	FINAL DESIGN	AJW	KLD	BW	RAO	
0	9/8/14	PRE-FINAL (90%) DESIGN	DS	WF	JP	CH	

REVISIONS

APPROVED BY	
RAO	
SO	
SUPV	
DSGN	
DWN	
CHKD	
OK	
DATE	
SCALES	

TOPOCK GROUNDWATER REMEDIATION PROJECT

FRESHWATER PRE-INJECTION TREATMENT MEDIA VESSEL SYSTEM - UPPER PLAN

GAS TRANSMISSION & DISTRIBUTION
PACIFIC GAS AND ELECTRIC COMPANY
SAN FRANCISCO, CALIFORNIA

MICROFILM	
BILL OF MATL	
DWG LIST	
SUPSDS	
SUPSD BY	
SHEET NO.	of SHEETS
M-13-02	REV 1

N1808

11/02/2015, 11:45, G:\Graphics\ARITOPOCK-01\Submittal_100%\DWGs\M-Mechanical\M-13-02.dwg, Tab: M-13-02

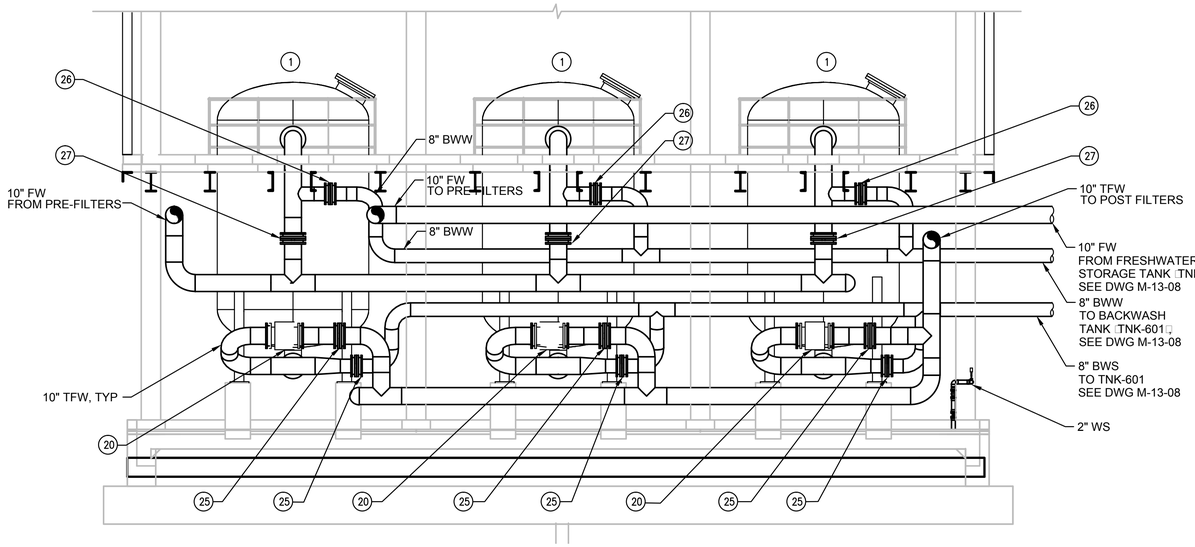

A SECTION
1/4"=1'-0"
M-13-01
M-13-02

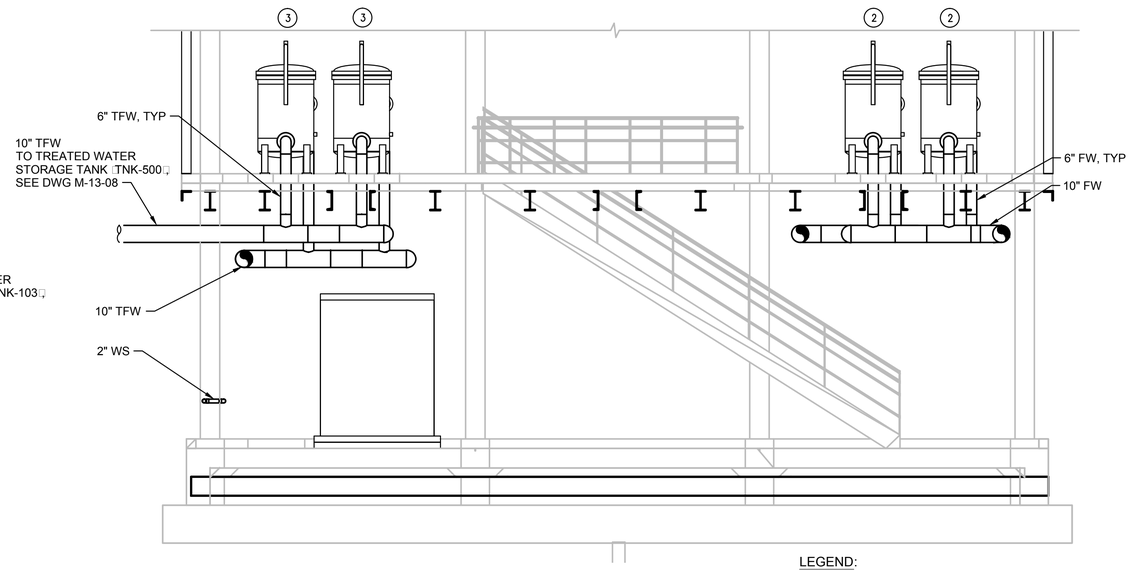

B SECTION
1/4"=1'-0"
M-13-01
M-13-02

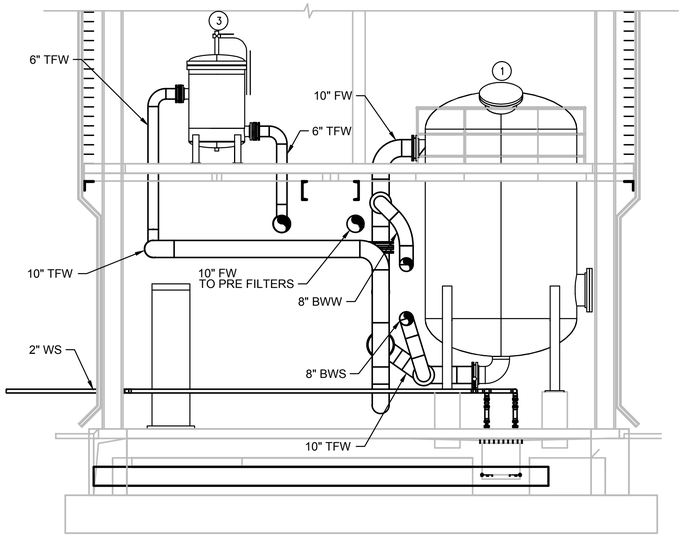

C SECTION
1/4"=1'-0"
M-13-01
M-13-02

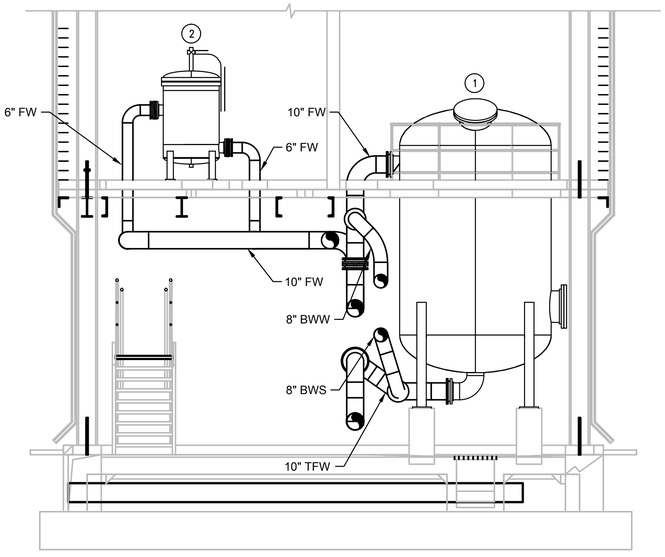

D SECTION
1/4"=1'-0"
M-13-01
M-13-02

LEGEND:

(7) REFERENCE ITEM NUMBER EQUIPMENT SCHEDULE ON SHEET M-13-06.

NOTES:
1. DRAIN LINES WILL BE SHOWN IN A FUTURE SUBMITTAL.
2. FOR PIPE ID AND ABBREVIATION SCHEDULE. SEE C-00-12.

CONTINGENT

NOTES:
1. THE EQUIPMENT AND FACILITY SHOWN IS PART OF A CONTINGENT SYSTEM AND MAY BE CONSTRUCTED IN THE FUTURE.

0 1 2 3
SCALE: 1/4"=1'

- FINAL DESIGN -
FOR AGENCY APPROVAL ONLY

REGISTERED PROFESSIONAL ENGINEER
BENJAMIN J. WUERL
C 67811
Exp 6/30/17
STATE OF CALIFORNIA

ETIC ENGINEERING

ARCADIS

NO.	DATE	DESCRIPTION	GM/SPEC	DWN	CHKD	SUPV	APVD BY
1	11/18/15	FINAL DESIGN	AJW	KLD	BW	RAO	
0	9/8/14	PRE-FINAL 90% DESIGN	DS	WF	JP	CH	

REVISIONS

APPROVED BY	
RAO	SO
	SUPV
	DSGN
	DWN
	CHKD
	OK
	DATE
	SCALES

TOPOCK GROUNDWATER REMEDIATION PROJECT
FRESHWATER PRE-INJECTION TREATMENT MEDIA VESSEL SYSTEM - SECTIONS
GAS TRANSMISSION & DISTRIBUTION
PACIFIC GAS AND ELECTRIC COMPANY
SAN FRANCISCO, CALIFORNIA

MICROFILM	
BILL OF MATL	
DWG LIST	
SUPSDS	
SUPSD BY	
SHEET NO. M-13-03 of SHEETS	REV 1

N1808

11/02/2015, 11:46, G:\Graphics\AR\TOPOCK-01\Submittal_100%\DWGs\M-Mechanical\M-13-03.dwg, Tab: M-13-03

LEGEND:

(7) REFERENCE ITEM NUMBER E□UIPMENT SCHEDULE ON SHEET M-13-06.

NOTES:
1. FOR PIPE ID AND ABBREVIATION SCHEDULE. SEE C-00-12.

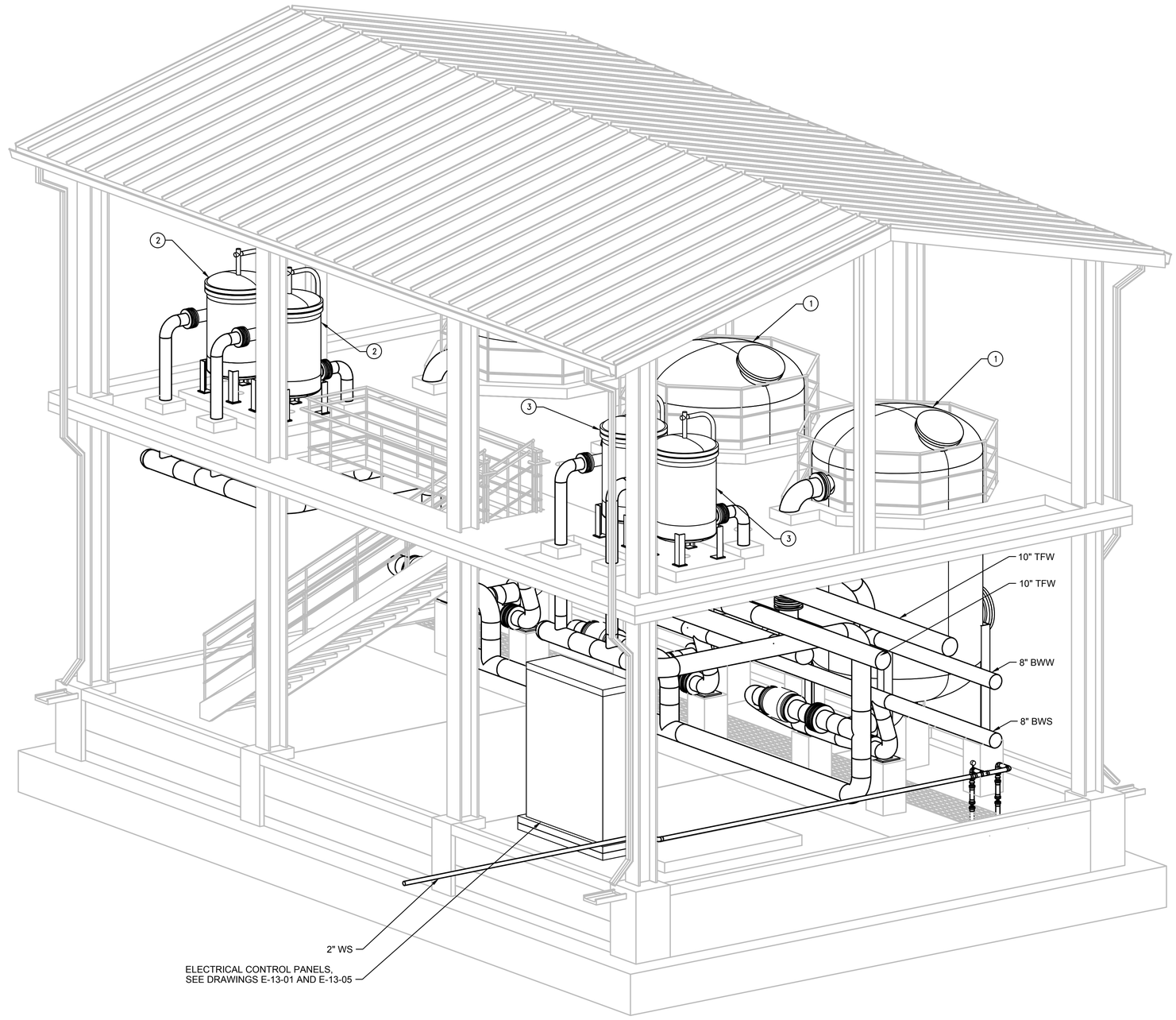

ISOMETRIC
NTS

CONTINGENT

NOTES:
1. THE E□UIPMENT AND FACILITY SHOWN IS PART OF A CONTINGENT SYSTEM AND MAY BE CONSTRUCTED IN THE FUTURE.

- FINAL DESIGN -
FOR AGENCY APPROVAL ONLY

REGISTERED PROFESSIONAL ENGINEER
BENJAMIN J. WUEST
C 67811
EXP 6/30/17
STATE OF CALIFORNIA

ETIC ENGINEERING

ARCADIS

NO.	DATE	DESCRIPTION	GM/SPEC	DWN	CHKD	SUPV	APVD BY
1	11/18/15	FINAL DESIGN	AJW	KLD	BW	RAO	
0	9/8/14	PRE-FINAL □90%□ DESIGN	DS	WF	JP	CH	

REVISIONS

APPROVED BY	
RAO	SO
	SUPV
	DSGN
	DWN
	CHKD
	OK
	DATE
	SCALES

TOPOCK GROUNDWATER REMEDIATION PROJECT
FRESHWATER PRE-INJECTION TREATMENT MEDIA VESSEL SYSTEM - ISOMETRIC
GAS TRANSMISSION & DISTRIBUTION
PACIFIC GAS AND ELECTRIC COMPANY
SAN FRANCISCO, CALIFORNIA

MICROFILM	
BILL OF MATL	
DWG LIST	
SUPSDS	
SUPSD BY	
SHEET NO.	of SHEETS
M-13-04	REV 1

N1808

11/02/2015, 11:48, G:\Graphics\ARTOPOCK-01\Submittal_100%\DWGs\M-Mechanical\M-13-04.dwg, Tab: M-13-04

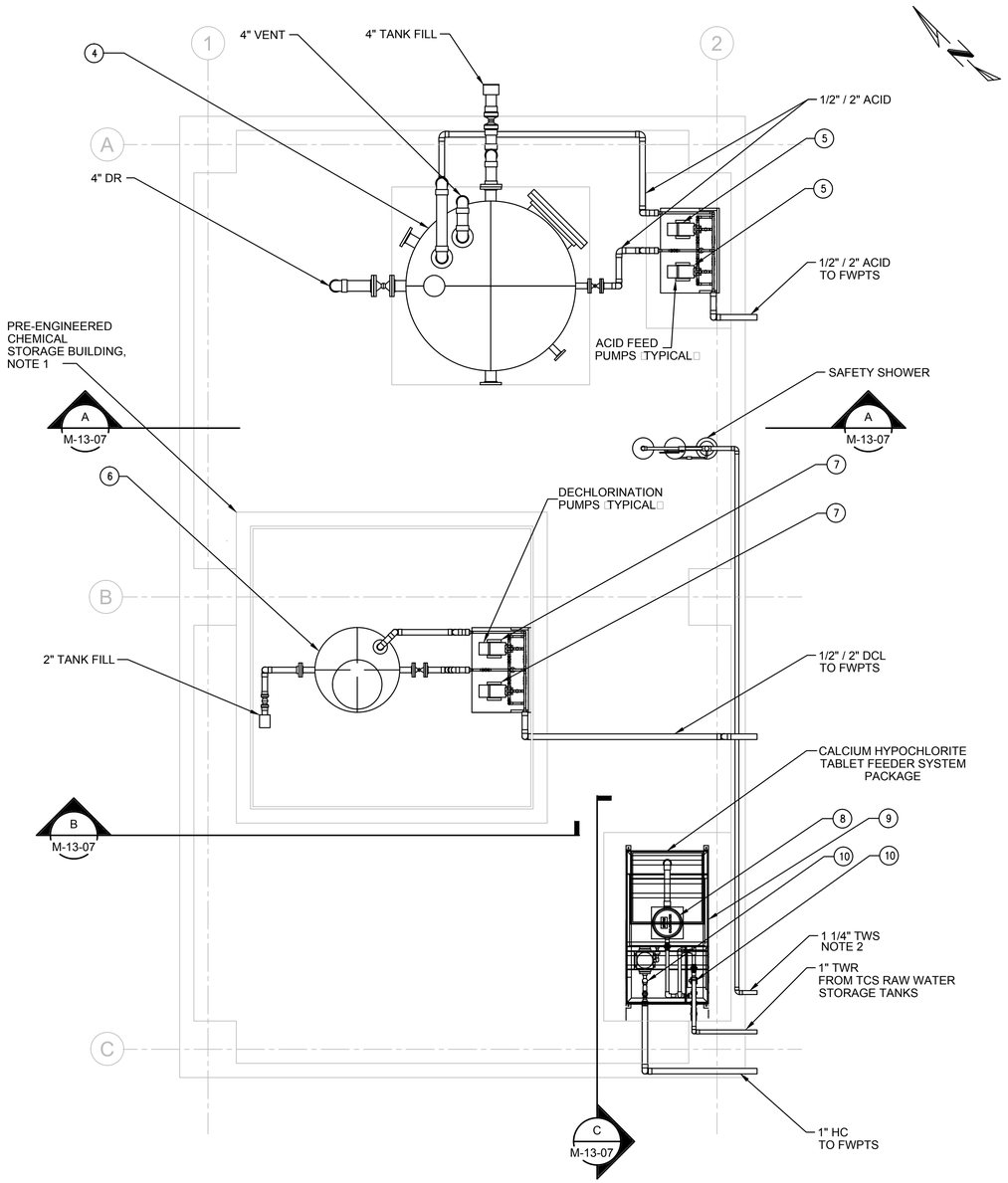

PLAN
3/8"=1'-0"

SCALE: 3/8"=1'

LEGEND:

(7) REFERENCE ITEM NUMBER E□UIPMENT SCHEDULE ON SHEET M-13-06.

NOTES:
1. PRE-ENGINEERED STEEL BUILDING INCLUDES ACCESS DOORS, LOADING RAMP, INTERNAL SECONDARY CONTAINMENT, 480V TRANSFORMER, 240 VOLT E□TERIOR PANEL, AND AIR CONDITIONER.
2. 1 1/4" CWR BELOW CWS LINE SUPPLIED FROM POTABLE WATER TANK TNK-□1300.
3. FOR PIPE ID AND ABBREVIATION SCHEDULE. SEE C-00-12.

EQUIPMENT SCHEDULE

ITEM	PIPE SIZE	MATERIAL	PROCESS FLOW	PIPE ID	DESCRIPTION	ID TAG
1			FRESHWATER	1	TREATMENT VESSEL	TV-*1310 TV-*1320 TV-*1330
2			FRESHWATER	1	PRE-FILTER	FIL-*1301 FIL-*1302
3			TREATED FRESHWATER WASTE	39	POST-FILTER	FIL-*1303 FIL-*1304
4			ACID	43	ACID STORAGE TANK	TNK-*1311
5	2"		ACID	43	ACID FEED PUMP	PMP-*1314 PMP-*1312
6			DECHLORINATION	52	DECHLORINATION TANK	TNK-*1322
7	2"		DECHLORINATION	52	DECHLORINATION PUMP	PMP-*1320 PMP-*1321
8			CALCIUM HYPOCHLORITE	53	TABLET HOPPER	TNK-*1303
9			CALCIUM HYPOCHLORITE	53	SOLUTION TANK	TNK-*1302
10	1"		CALCIUM HYPOCHLORITE	53	CALCIUM HYPOCHLORITE FEED PUMP	PMP-*1303 PMP-*1304
11	10"		FRESHWATER	1	BOOSTER PUMP	PMP-*1301 PMP-*1302
12			FRESHWATER	1	REMEDY FRESHWATER STORAGE TANK	TNK-*0203
13	2"		SLURRY	50	SOLIDS TRANSFER PUMP	PMP-*1330
14	1"		BACKWASH WASTE	40	RECYCLE PUMP	PMP-*1310 PMP-*1322
15	8"		BACKWASH SUPPLY	41	BACKWASH PUMP	PMP-*1323 PMP-*1331
16	10"		FRESHWATER	1	STATIC MIXER	MXR2-*1303
17			BACKWASH WASTE	40	BACKWASH TANK	TNK-*1301
18			TREATED FRESHWATER WASTE	39	TREATED WATER STORAGE TANK	TNK-*1300
19	10"		TREATED FRESHWATER WASTE	39	TREATED WATER PUMP	PMP-*1313 PMP-*1311
20	10"		TREATED FRESHWATER WASTE	39	MAGNETIC FLOW METER	FE-*1377 FE-*1372 FE-*1373
21	10"		TREATED FRESHWATER WASTE	39	PRESSURE GAUGE	PI-*1365
22	10"		FRESHWATER	1	ORP SENSOR	AE-*1382
23	10"		FRESHWATER	1	PH SENSOR	AE-*1381
24	10"		BACKWASH WASTE	40	MAGNETIC FLOWMETER	FE-*1378
25	10"		TREATED FRESHWATER WASTE	39	BUTTERFLY VALVE	V-*1377A V-*1372A V-*1373A V-*1377B V-*1372B V-*1373B
26	8"		BACKWASH WASTE	40	GATE VALVE	FV-*1346 FV-*1342 FV-*1340
27	10"		FRESHWATER	1	GATE VALVE	FV-*1345 FV-*1343 FV-*1339
28	6"		FRESHWATER	1	MAGNETIC FLOWMETER	FE-*1371
29	6"		FRESHWATER	1	PRESSURE GAUGE	PI-*1363
30	1"		BACKWASH WASTE	40	PRESSURE GAUGE	PI-*1364
31	8"		BACKWASH SUPPLY	41	PRESSURE GAUGE	PI-*1367
32	8"		BACKWASH SUPPLY	41	MAGNETIC FLOWMETER	FE-*1376
33	10"		TREATED FRESHWATER WASTE	39	MAGNETIC FLOWMETER	FE-*1375
34	10"		TREATED FRESHWATER WASTE	39	ORP SENSOR	AE-*1383

CONTINGENT

NOTES:
1. THE E□UIPMENT AND FACILITY SHOWN IS PART OF A CONTINGENT SYSTEM AND MAY BE CONSTRUCTED IN THE FUTURE.

- FINAL DESIGN -
FOR AGENCY APPROVAL ONLY

REGISTERED PROFESSIONAL ENGINEER
BENJAMIN J. WUERL
C 67811
EXP 6/30/17
STATE OF CALIFORNIA

ETIC ENGINEERING

ARCADIS

NO.	DATE	DESCRIPTION	GM/SPEC	DWN	CHKD	SUPV	APVD BY
1	11/18/15	FINAL DESIGN	AJW	KLD	BW	RAO	
0	09/08/14	PRE-FINAL .90% DESIGN	CS	WF	JP	CH	

REVISIONS

APPROVED BY: RAO

SO
SUPV
DSGN
DWN
CHKD
OK
DATE
SCALES

TOPOCK GROUNDWATER REMEDIATION PROJECT

FRESHWATER PRE-INJECTION TREATMENT CHEMICAL SYSTEMS PLAN

GAS TRANSMISSION & DISTRIBUTION
PACIFIC GAS AND ELECTRIC COMPANY
SAN FRANCISCO, CALIFORNIA

MICROFILM
BILL OF MATL
DWG LIST
SUPSDS
SUPSD BY
SHEET NO. M-13-06 of SHEETS
REV 1

N1808

11/02/2015, 11:50, G:\Graphics\ART\TOPOCK-011Submittal_100%\DWGs\M-MechanicalM-13-06.dwg, Tab: M-13-06

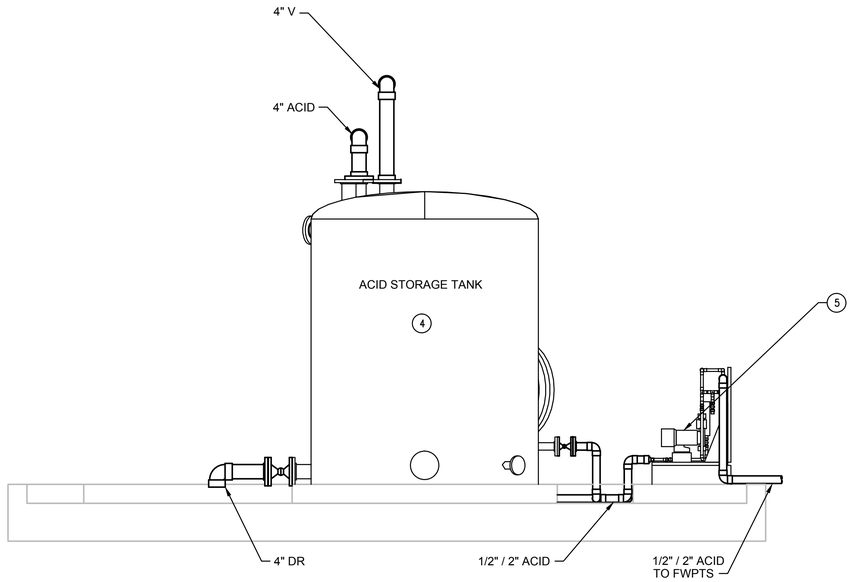

A SECTION
1/2" = 1'-0"
M-13-06

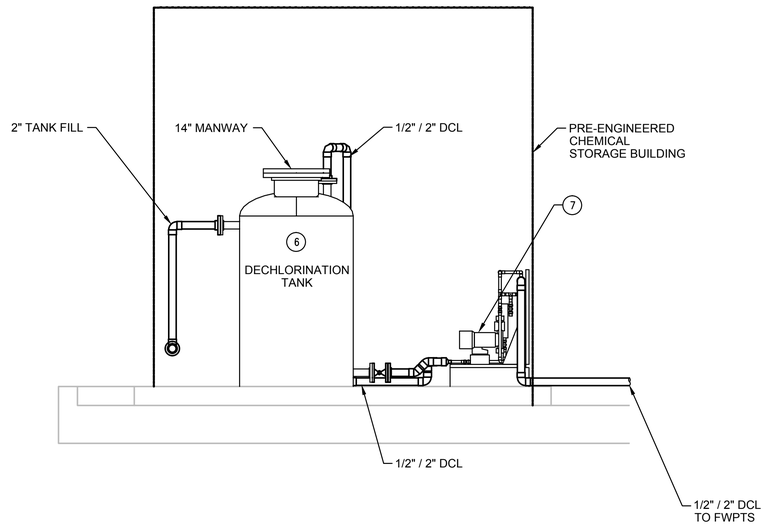

B SECTION
1/2" = 1'-0"
M-13-06

LEGEND:

(7) REFERENCE ITEM NUMBER E□UIPMENT SCHEDULE ON SHEET M-13-06.

NOTES:
1. FOR PIPE ID AND ABBREVIATION SCHEDULE. SEE C-00-12.

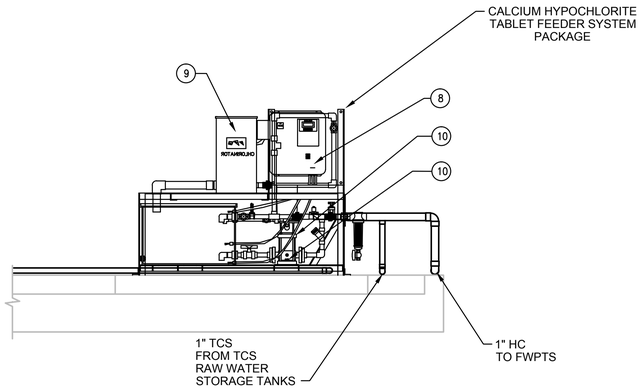

C SECTION
1/2" = 1'-0"
M-13-06

0 1 2 3
SCALE: 1/2"=1'

CONTINGENT

NOTES:
1. THE E□UIPMENT AND FACILITY SHOWN IS PART OF A CONTINGENT SYSTEM AND MAY BE CONSTRUCTED IN THE FUTURE.

- FINAL DESIGN -
FOR AGENCY APPROVAL ONLY

REGISTERED PROFESSIONAL ENGINEER
BENJAMIN J. WUERL
C 67811
EXP 6/30/17
CIVIL
STATE OF CALIFORNIA

ETIC ENGINEERING

ARCADIS

NO.	DATE	DESCRIPTION	GM/SPEC	DWN	CHKD	SUPV	APVD BY
1	11/18/15	FINAL DESIGN	AJW	KLD	BW	RAO	
0	9/8/14	PRE-FINAL (90%□ DESIGN	CS	WF	JP	CH	

REVISIONS

APPROVED BY	
RAO	SO
	SUPV
	DSGN
	DWN
	CHKD
	OK
	DATE
	SCALES

TOPOCK GROUNDWATER REMEDIATION PROJECT

FRESHWATER PRE-INJECTION TREATMENT CHEMICAL SYSTEMS SECTIONS

GAS TRANSMISSION & DISTRIBUTION
PACIFIC GAS AND ELECTRIC COMPANY
SAN FRANCISCO, CALIFORNIA

MICROFILM	
BILL OF MATL	
DWG LIST	
SUPSDS	
SUPSD BY	
SHEET NO.	of SHEETS
M-13-07	REV 1

N1608

11/02/2015, 11:51, G:\Graphics\AR\TOPOCK-01\Submittal_100%\DWGs\M-Mechanical\M-13-07.dwg, Tab: M-13-07

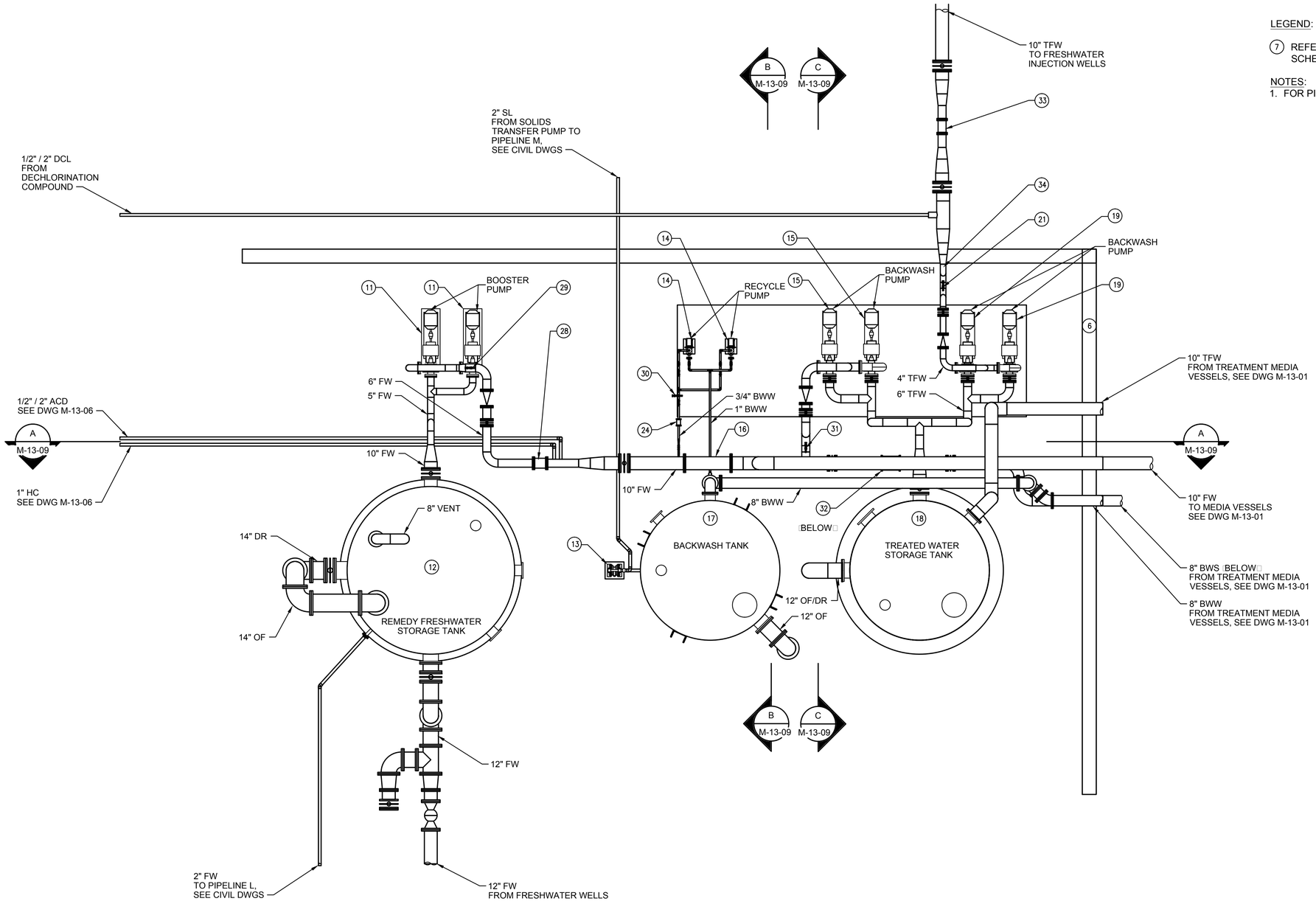

LEGEND:

(7) REFERENCE ITEM NUMBER E□UIPMENT SCHEDULE ON SHEET M-13-06.

NOTES:
1. FOR PIPE ID AND ABBREVIATION SCHEDULE. SEE C-00-12.

CONTINGENT

NOTES:
1. THE E□UIPMENT AND FACILITY SHOWN IS PART OF A CONTINGENT SYSTEM AND MAY BE CONSTRUCTED IN THE FUTURE.

PLAN

1/4 "= 1'-0"

0 1 2 3

SCALE: 1/4" = 1'

- FINAL DESIGN -
FOR AGENCY APPROVAL ONLY

REGISTERED PROFESSIONAL ENGINEER
BENJAMIN J. WUERL
C 67811
EXP 6/30/17
STATE OF CALIFORNIA

ETIC ENGINEERING

ARCADIS

NO.	DATE	DESCRIPTION	GM/SPEC	DWN	CHKD	SUPV	APVD BY
1	11/18/15	FINAL DESIGN	AJW	KLD	BW	RAO	
0	09/20/14	PRE-FINAL □90%□ DESIGN	CS	WF	JP	CH	

REVISIONS

APPROVED BY	
RAO	SO
	SUPV
	DSGN
	DWN
	CHKD
	OK
	DATE
	SCALES

TOPOCK GROUNDWATER REMEDIATION PROJECT

FRESHWATER PRE-INJECTION TREATMENT PROCESS TANKS PLAN

GAS TRANSMISSION & DISTRIBUTION

PACIFIC GAS AND ELECTRIC COMPANY
SAN FRANCISCO, CALIFORNIA

MICROFILM	
BILL OF MATL	
DWG LIST	
SUPSDS	
SUPSD BY	
SHEET NO. of SHEETS	
M-13-08	REV 1

N1808

11/02/2015, 11:53, G:\Graphics\ARITOPOCK-01\Submittal_100%\DWGs\M-Mechanical\M-13-08.dwg, Tab: M-13-08

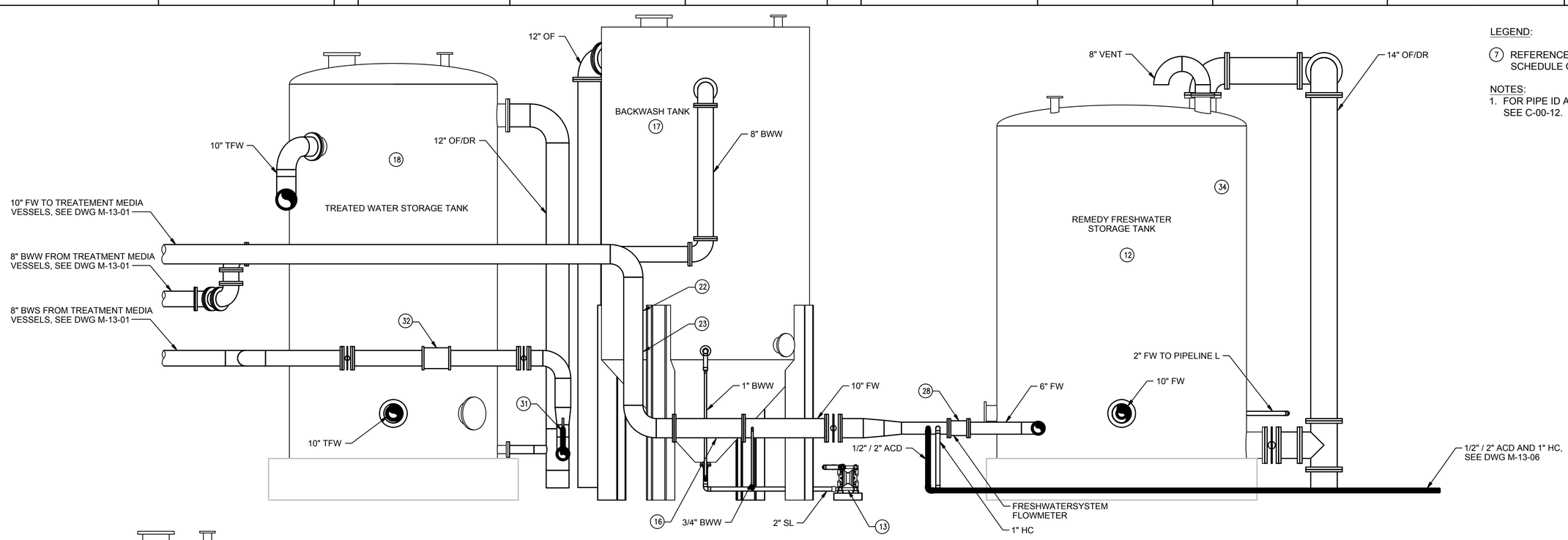

LEGEND:

(7) REFERENCE ITEM NUMBER E□UIPMENT SCHEDULE ON SHEET M-13-06.

NOTES:

1. FOR PIPE ID AND ABBREVIATION SCHEDULE. SEE C-00-12.

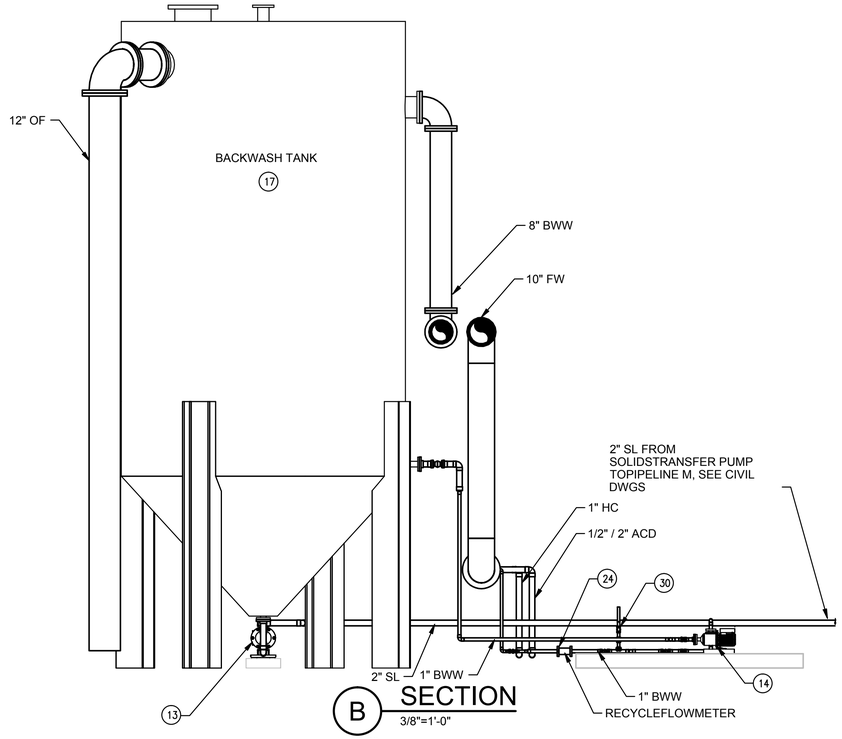

B SECTION
3/8"=1'-0"
M-13-09

A TANK ELEVATION
3/8"=1'-0"
M-13-09

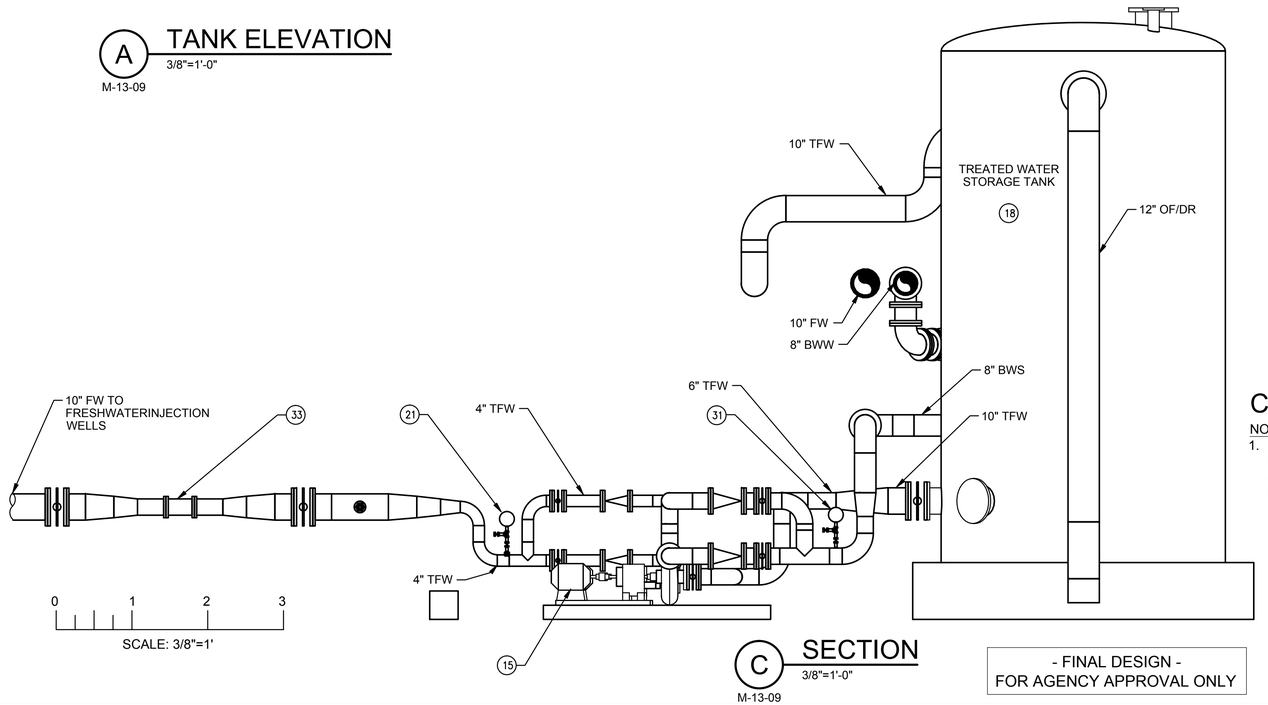

C SECTION
3/8"=1'-0"
M-13-09

CONTINGENT

NOTES:

1. THE E□UIPMENT AND FACILITY SHOWN IS PART OF A CONTINGENT SYSTEM AND MAY BE CONSTRUCTED IN THE FUTURE.

- FINAL DESIGN -
FOR AGENCY APPROVAL ONLY

REGISTERED PROFESSIONAL ENGINEER
BENJAMIN J. WUERL
C 67811
EXP 6/30/17
STATE OF CALIFORNIA

ETIC ENGINEERING

ARCADIS

NO.	DATE	DESCRIPTION	GM/SPEC	DWN	CHKD	SUPV	APVD BY
1	11/18/15	FINAL DESIGN	AJW	KLD	BW	RAO	
0	09/2014	PRE-FINAL (90%) DESIGN			JP	CH	

REVISIONS

APPROVED BY	
RAO	SO
	SUPV
	DSGN
	DWN
	CHKD
	OK
	DATE
	SCALES

TOPOCK GROUNDWATER REMEDIATION PROJECT

FRESHWATER PRE-INJECTION TREATMENT PROCESS TANKS ELEVATION AND SECTIONS

GAS TRANSMISSION & DISTRIBUTION
PACIFIC GAS AND ELECTRIC COMPANY
SAN FRANCISCO, CALIFORNIA

MICROFILM	
BILL OF MATL	
DWG LIST	
SUPSDS	
SUPSD BY	
SHEET NO. of SHEETS	
M-13-09	REV 1

N1808

11/02/2015, 11:55, G:\Graphics\ART\TOPOCK-01\Submittal_100%\DWGs\M-Mechanical\M-13-09.dwg, Tab: M-13-09

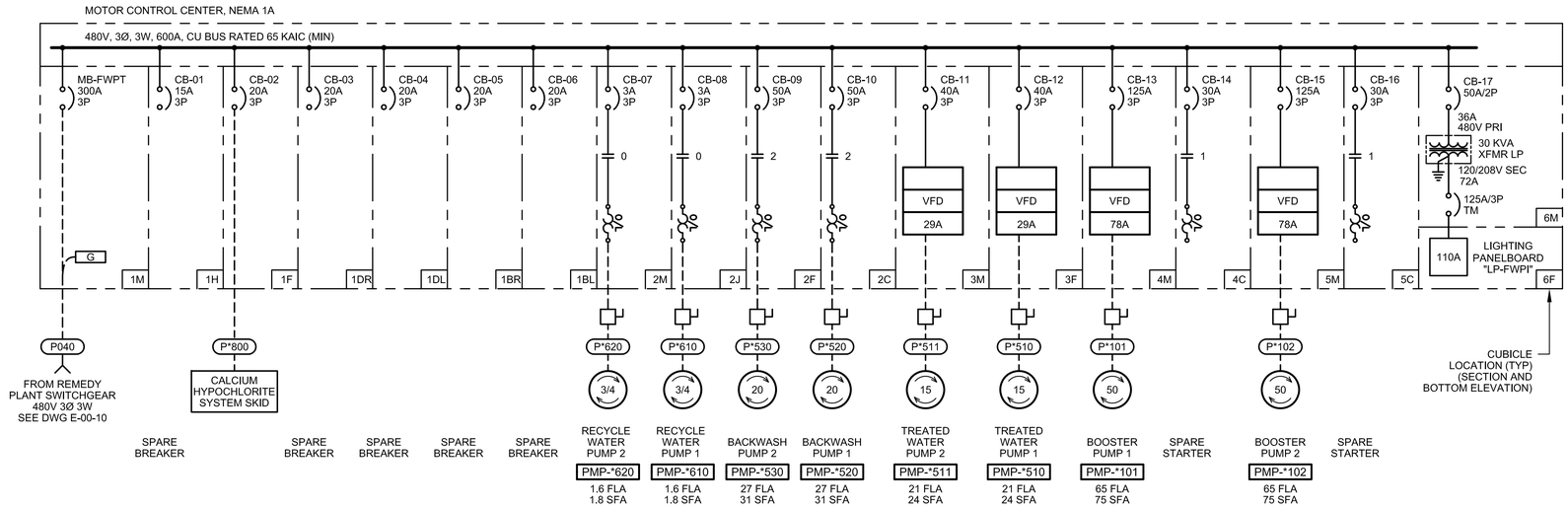

MOTOR CONTROL CENTER ONE-LINE (5)

GENERAL NOTES:

1. ALL DIMENSIONS ARE APPROXIMATE. ACTUAL DIMENSIONS SHALL BE PER MANUFACTURER APPROVED IN SUBMITTAL.

NOTES REFERENCED IN DRAWING:

(1) PROVIDE NEMA 1 ENCLOSURE FOR MCC.

(2) PROVIDE MINIMUM CUBICLE SIZING AS SHOWN.

(3) PROVIDE 12" BREAKER OPERATING CHAIN FOR BREAKERS LOCATED AT THE TOP OF EACH SECTION.

(4) PROVIDE NAMEPLATES PER SCHEDULE THIS PAGE.

(5) THE EQUIPMENT AND FACLITIES SHOWN ARE PART OF A CONTINGENT SYSTEM AND MAY BE CONSTRUCTED IN THE FUTURE.

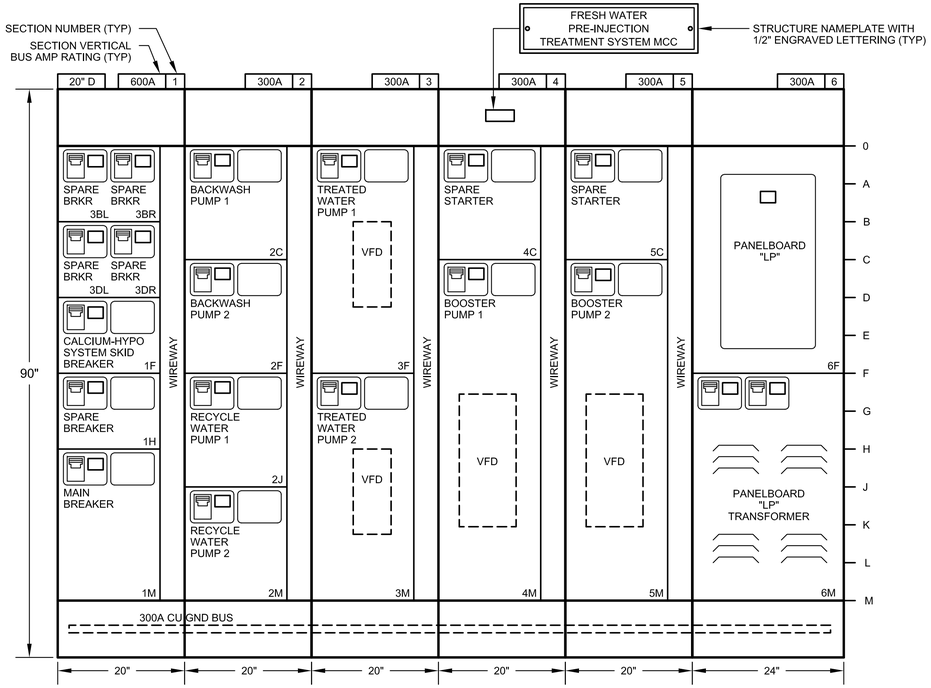

MCC ELEVATION (5)

- FINAL DESIGN - FOR AGENCY APPROVAL ONLY

REGISTERED PROFESSIONAL ENGINEER JOHN M. SIOUTAS 20532 Exp. 9-30-17 ELECTRICAL STATE OF CALIFORNIA

NO.	DATE	DESCRIPTION	GM/SPEC	DWN	CHKD	SUPV	APVD BY
1	11/18/15	FINAL DESIGN		MBY	TPF	JMS	RAO
0	9/8/14	PRE-FINAL (90%) DESIGN		MBY		TPF	

REVISIONS

APPROVED BY: RAO

SO
SUPV JMS
DSGN MBY
DWN MBY
CHKD TPF
OK JMS
DATE
SCALES N/A

FRISCH ENGINEERING, INC.
CONSULTING ELECTRICAL ENGINEERS
13405 FOLSOM BLVD, UNIT 600
FOLSOM, CA 95630
PH 916 353 1025
WWW.FRISCHENGINEERING.COM

ARCADIS

TOPOCK GROUNDWATER REMEDIATION PROJECT
FRESH WATER PRE-INJECTION TREATMENT SYSTEM
MCC ONE-LINE & ELEVATION
GAS TRANSMISSION & DISTRIBUTION
PACIFIC GAS AND ELECTRIC COMPANY
SAN FRANCISCO, CALIFORNIA

MICROFILM
BILL OF MATL
DWG LIST
SUPSDS
SUPSD BY
SHEET NO. of SHEETS
E-13-01 REV 0

PLOT DATE: Oct 29, 2015 PLOT TIME: 4:04:36pm
FILENAME: E-13-01.dwg

N1808

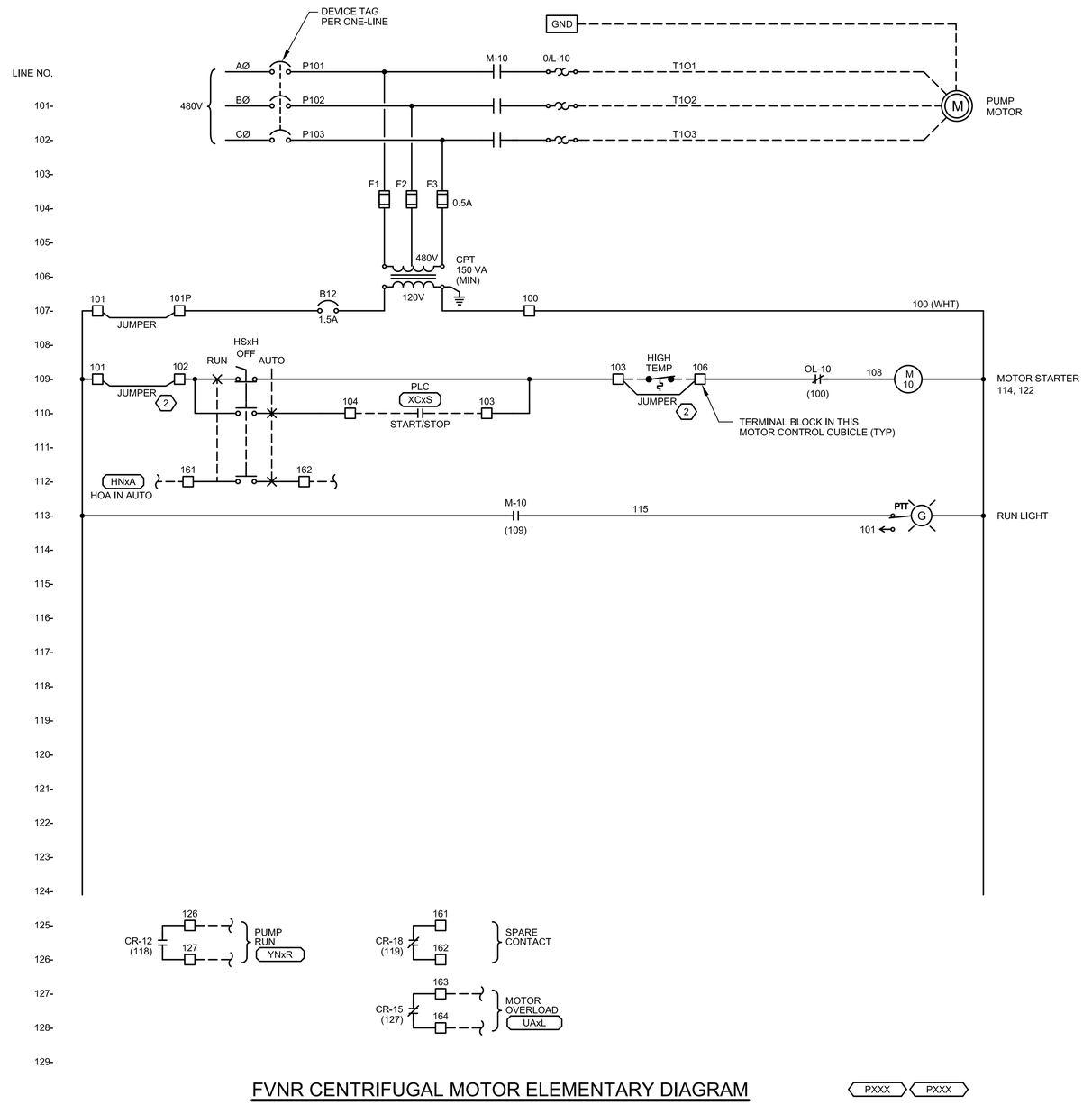

FVNR CENTRIFUGAL MOTOR ELEMENTARY DIAGRAM

PXXX PXXX

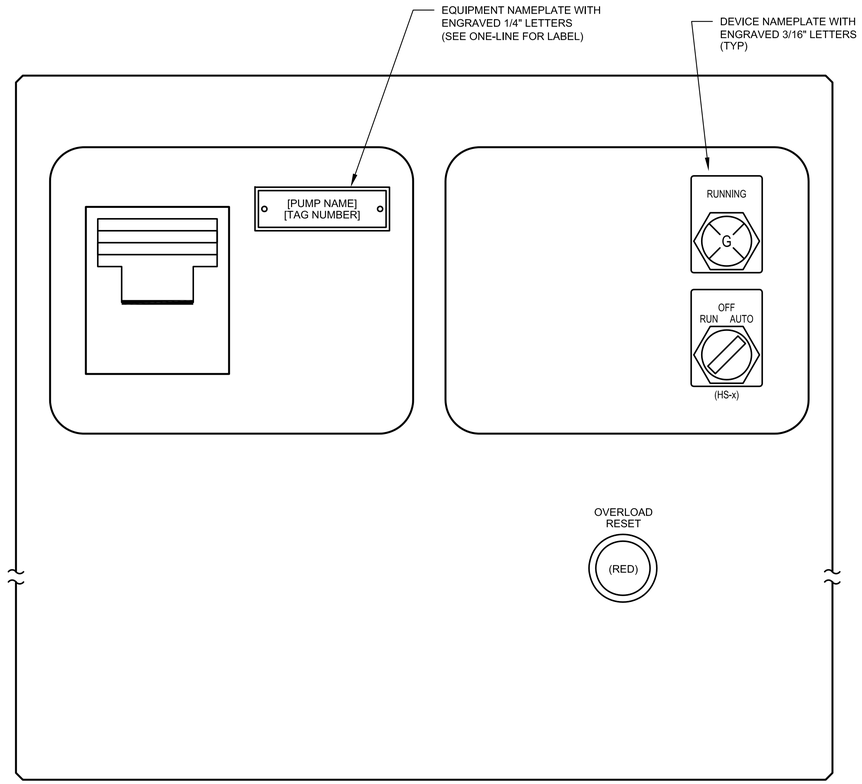

CUBICLE DOOR LAYOUT

NOTES REFERENCED IN DRAWING:

1. SET TIME DELAY ON DROP TO 0.5 SECONDS.
2. REMOVE JUMPER FOR DEVICE WHEN CONNECTED.

GENERAL NOTES:

1. SIMILAR DIAGRAM FOR PUMPS LISTED AND PER P&IDS.
2. TERMINAL BLOCKS AND WIRES SHALL BE LABELED SAME EXCEPTION: WIRES TO PLC SHALL BE NUMBERED PER CONTROL PANEL TERMINAL BLOCK NUMBER.

- FINAL DESIGN - FOR AGENCY APPROVAL ONLY

REGISTERED PROFESSIONAL ENGINEER JOHN M. SIOOTIS 20532 Exp. 9-30-17 ELECTRICAL STATE OF CALIFORNIA

FRISCH ENGINEERING, INC.
CONSULTING ELECTRICAL ENGINEERS
13405 FOLSOM BLVD, UNIT 600
FOLSOM, CA 95630
PH 916 353 1025
WWW.FRISCHENGINEERING.COM

ARCADIS

NO.	DATE	DESCRIPTION	GM/SPEC	DWN	CHKD	SUPV	APVD BY
1	11/18/15	FINAL DESIGN		MBY	TPF	JMS	RAO
0	9/8/14	PRE-FINAL (90%) DESIGN		MBY		TPF	

REVISIONS

APPROVED BY	
RAO	

SO	
SUPV	JMS
DSGN	MBY
DWN	MBY
CHKD	TPF
OK	JMS
DATE	
SCALES	N/A

TOPOCK GROUNDWATER REMEDIATION PROJECT
FRESH WATER PRE-INJECTION TREATMENT SYSTEM
FVNR ELEMENTARY DIAGRAM
GAS TRANSMISSION & DISTRIBUTION
PACIFIC GAS AND ELECTRIC COMPANY
SAN FRANCISCO, CALIFORNIA

MICROFILM	
BILL OF MATL	
DWG LIST	
SUPSDS	
SUPSD BY	
SHEET NO.	of SHEETS
E-13-02	REV 0

PLOT TIME: 2:10:15pm
PLOT DATE: Oct 30, 2015
FILENAME: E-13-02.dwg

N1808

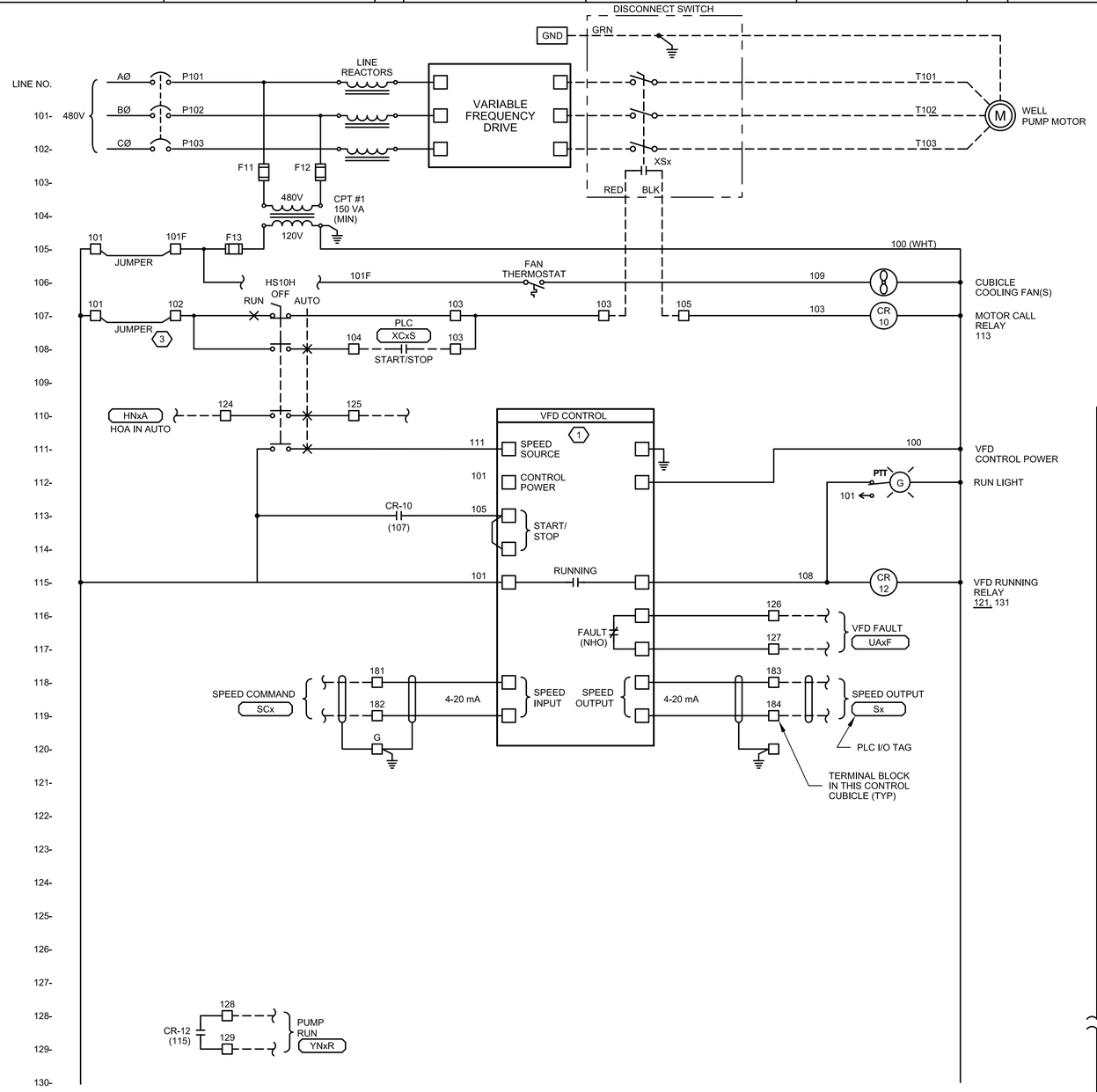

③ VFD ELEMENTARY DIAGRAM

NOTES REFERENCED IN DRAWING:

1. PROVIDE VFD WITH 120 VAC CONTROL CIRCUIT INTERFACE AND ELECTRONIC OVERLOAD PROTECTION.
2. REMOVE JUMPER FOR DEVICE WHEN CONNECTED.
3. THE EQUIPMENT AND FACLITIES SHOWN ARE PART OF A CONTINGENT SYSTEM AND MAY BE CONSTRUCTED IN THE FUTURE.

GENERAL NOTES:

1. TERMINAL BLOCKS AND WIRES SHALL BE LABELED SAME EXCEPTION: WIRES TO PLC SHALL BE NUMBERED PER CONTROL PANEL TERMINAL BLOCK NUMBER.
2. SIMILAR DIAGRAM FOR ALL VFD MOTORS AS SHOWN IN ONE-LINE DIAGRAM

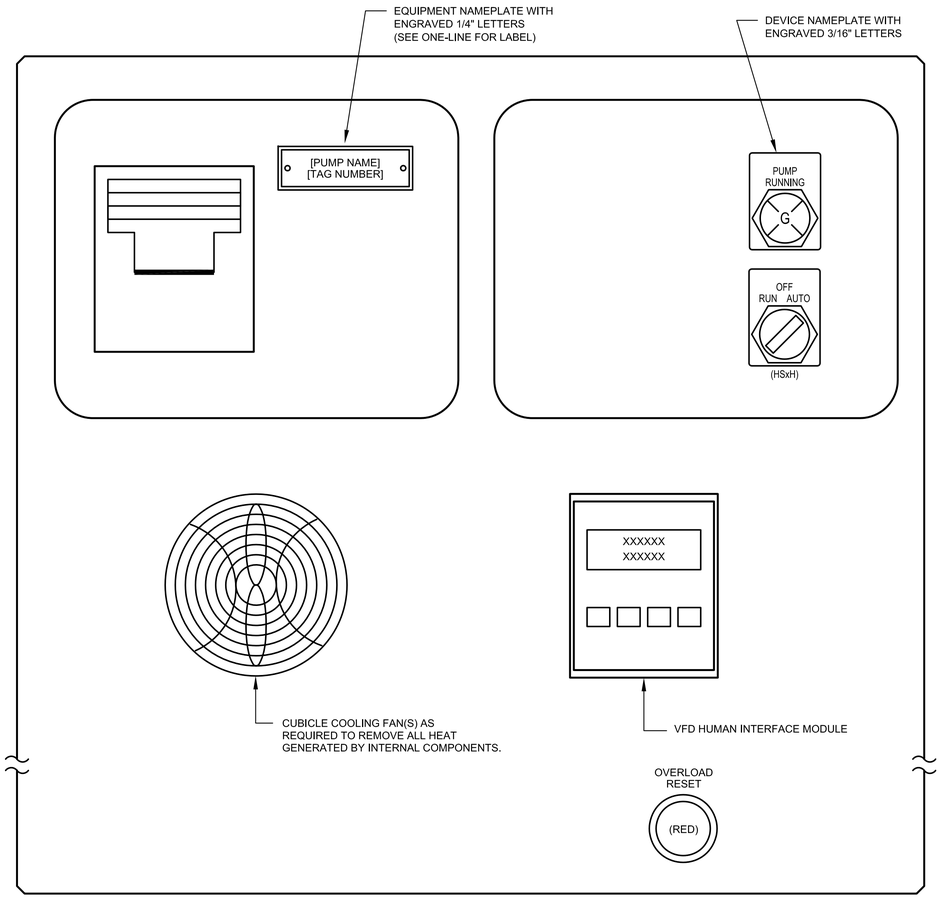

DOOR LAYOUT ③

NOT TO SCALE

- FINAL DESIGN - FOR AGENCY APPROVAL ONLY

REGISTERED PROFESSIONAL ENGINEER JOHN M. SIDDI 20532 Exp. 9-30-17 ELECTRICAL STATE OF CALIFORNIA

FRISCH ENGINEERING, INC.
CONSULTING ELECTRICAL ENGINEERS
13405 FOLSOM BLVD, UNIT 600
FOLSOM, CA 95630
PH 916 353 1025
WWW.FRISCHENGINEERING.COM

ARCADIS

NO.	DATE	DESCRIPTION	GM/SPEC	DWN	CHKD	SUPV	APVD BY
1	11/18/15	FINAL DESIGN		MBY	TPF	JMS	RAO
0	9/8/14	PRE-FINAL (90%) DESIGN		MBY		TPF	

REVISIONS

APPROVED BY	
RAO	

SO	
SUPV	JMS
DSGN	MBY
DWN	MBY
CHKD	TPF
OK	JMS
DATE	
SCALES	N/A

TOPOCK GROUNDWATER REMEDIATION PROJECT
FRESH WATER PRE-INJECTION TREATMENT SYSTEM
VFD ELEMENTARY DIAGRAM
GAS TRANSMISSION & DISTRIBUTION
PACIFIC GAS AND ELECTRIC COMPANY
SAN FRANCISCO, CALIFORNIA

MICROFILM	
BILL OF MATL	
DWG LIST	
SUPSDS	
SUPSD BY	
SHEET NO.	of SHEETS
E-13-03	REV 0

PLOT DATE: Oct 30, 2015 PLOT TIME: 2:10:25pm
FILENAME: E-13-03.dwg

N1808

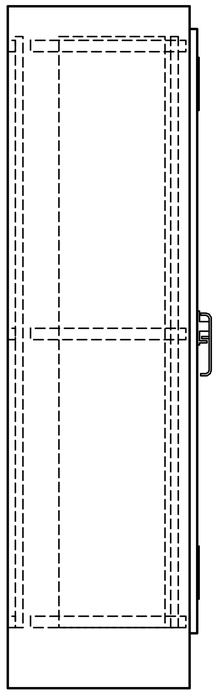

SIDE ELEVATION

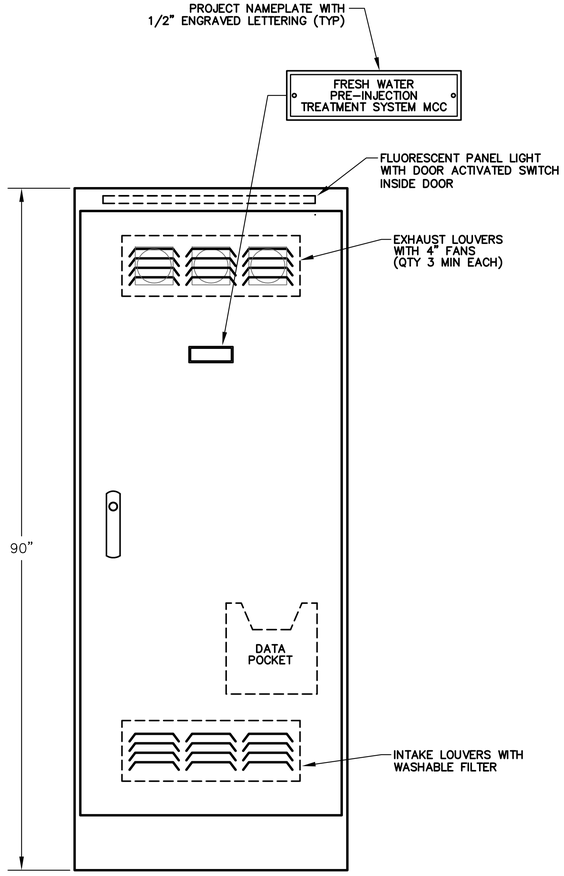

FRONT ELEVATION

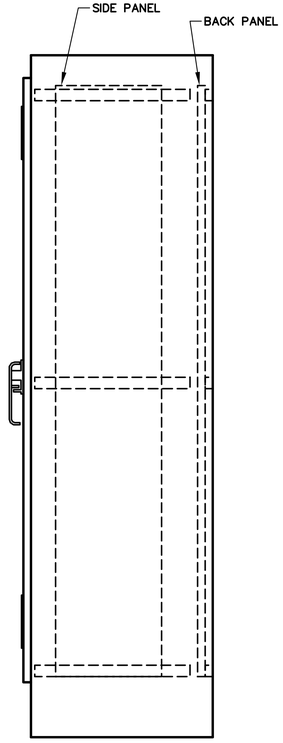

SIDE ELEVATION

ELEVATION (1)

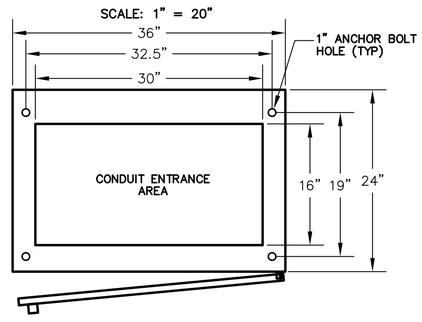

BASE PLAN
SCALE: 1" = 20"

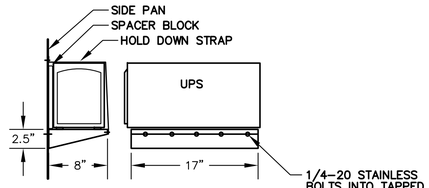

UPS SHELF DETAIL
SCALE: 1" = 10"

DETAIL NOTES:

(1) DO NOT BLOCK VENTS WITH SPACER BLOCK. USE TWO.

(2) FABRICATED FROM 14 GA (MIN) PAINTED GALVANEAL OR STAINLESS STEEL SOLID SIDES, TOP, BACK AND FRONT WITH CONTINUOUS WELDED SEAMS.

PANEL FABRICATION METHODS

1. NEMA 12, OPEN BOTTOM.
2. OUTER DOOR SEALED WITH RUBBERIZED FOAM GASKET.
3. PANEL SHALL BE FABRICATED FROM PAINT BOND GALVANEAL SHEET STEEL.
4. 12 GAUGE EXTERIOR AND 14 GAUGE INTERIOR.
5. ALL SEAMS SHALL HAVE CONTINUOUS WELD GROUND SMOOTH.
6. DOOR TO BE PADLOCKABLE WITH HEAVY DUTY 3 POINT LATCH.
7. DOOR HINGES AND PINS SHALL BE CONTINUOUS, HEAVY DUTY.
8. NO SCREWS, RIVETS, OR BOLTS SHALL PROTRUDE EXTERNALLY.
9. INTERNAL SCREWS, RIVETS, BOLTS, AND NUTS SHALL BE MACHINE THREAD INTO TAPPED BACKPAN.
10. EXTERIOR PANEL COLOR: ANSI 61 GRAY.
11. MOUNTING PAN AND INTERIOR DOOR COLOR: WHITE.
12. FABRICATION AND WIRING SHALL CONFORM TO U.L. AND NEMA STANDARDS.
13. ALL WIRING SHALL BE PERMANENTLY LABELED WITH WIRE MARKERS ON BOTH ENDS.
14. WIRING DIAGRAMS SHALL BE PLACED IN A PLASTIC DRAWING HOLDER PERMANENTLY ATTACHED TO THE INSIDE OF THE FRONT DOOR.
15. AS – BUILT WIRING DIAGRAMS SHALL BE SHIPPED WITH EQUIPMENT.
16. UPS SHELF SHALL BE 14GA PAINTED STEEL BOLTED TO SIDEPAN.

NOTES REFERENCED IN DRAWING:

(1) THE EQUIPMENT AND FACLITIES SHOWN ARE PART OF A CONTINGENT SYSTEM AND MAY BE CONSTRUCTED IN THE FUTURE.

- FINAL DESIGN -
FOR AGENCY
APPROVAL ONLY

REGISTERED PROFESSIONAL ENGINEER
JOHN M. SIGOTA
20532
Exp. 9-30-17
ELECTRICAL
STATE OF CALIFORNIA

FRISCH ENGINEERING, INC.
CONSULTING ELECTRICAL ENGINEERS
13405 FOLSOM BLVD, UNIT 600
FOLSOM, CA 95630
PH 916 353 1025
WWW.FRISCHENGINEERING.COM

ARCADIS

NO.	DATE	DESCRIPTION	GM/SPEC	DWN	CHKD	SUPV	APVD BY
1	11/18/15	FINAL DESIGN		MBY	TPF	JMS	RAO
0	9/8/14	PRE-FINAL (90%) DESIGN		MBY			TPF

REVISIONS

APPROVED BY	
RAO	

SO	
SUPV	JMS
DSGN	MBY
DWN	MBY
CHKD	TPF
OK	JMS
DATE	
SCALES	N/A

TOPOCK GROUNDWATER REMEDIATION PROJECT
FRESH WATER PRE-INJECTION TREATMENT SYSTEM CONTROL PANEL ELEVATION
GAS TRANSMISSION & DISTRIBUTION
PACIFIC GAS AND ELECTRIC COMPANY
SAN FRANCISCO, CALIFORNIA

MICROFILM	
BILL OF MATL	
DWG LIST	
SUPSDS	
SUPSD BY	
SHEET NO.	of SHEETS
E-13-04	REV 0

PLOT DATE: Oct 30, 2015 PLOT TIME: 2:10:38pm
FILENAME: E-13-04.dwg

N1808

GENERAL NOTES:

1. REPRESENTATIVE OF MAJOR COMPONENTS ONLY. ACTUAL BACKPAN LAYOUT SHALL BE SIMILAR TO LAYOUT SHOWN. SUBMIT SCALED BACKPAN LAYOUT FOR REVIEW BY ENGINEER.
2. QUANTITY OF TERMINAL BLOCKS AND RELAYS SHALL BE AS DETERMINED BY P&IDS AND EXAMPLE I/O WIRING DIAGRAM, DWG E-11.

NOTES REFERENCED IN DRAWING:

(1) WIRE I/O TO TERMINAL BLOCK PER EXAMPLE I/O WIRING DIAGRAMS.

(2) THE EQUIPMENT AND FACILITIES SHOWN ARE PART OF A CONTINGENT SYSTEM AND MAY BE CONSTRUCTED IN THE FUTURE.

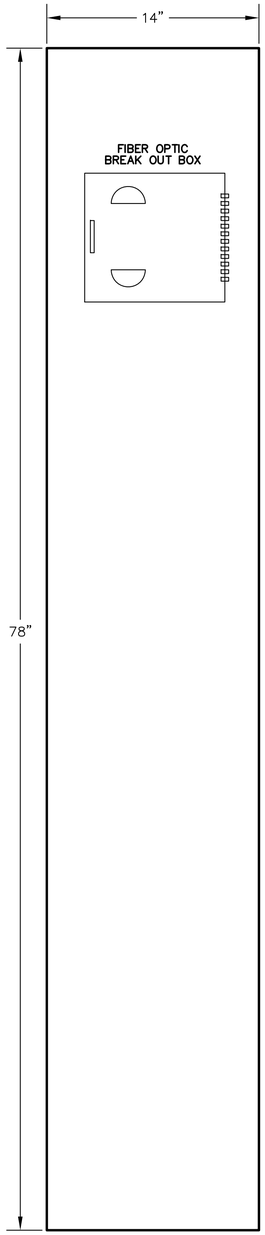

LEFT

SIDEPAN LAYOUT (2)

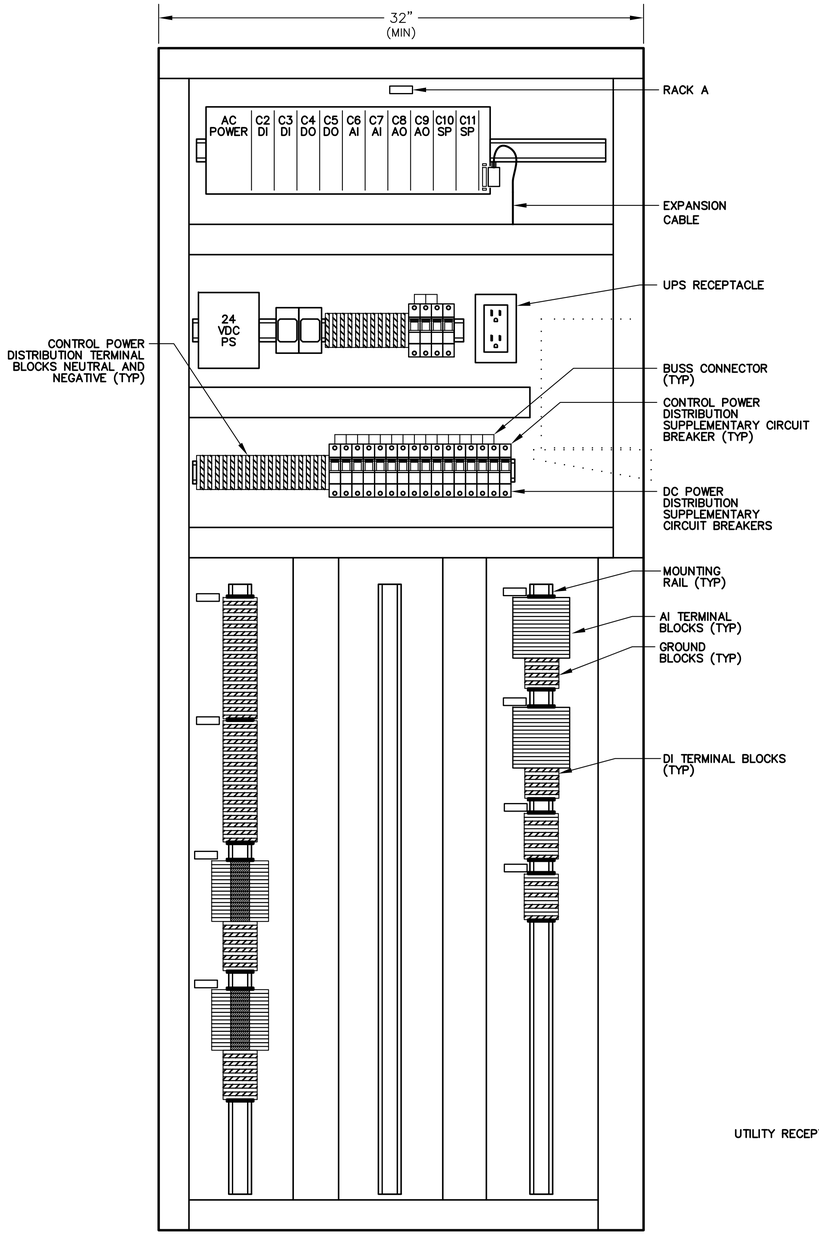

RIGHT CENTER (1)

BACKPAN LAYOUT (2)

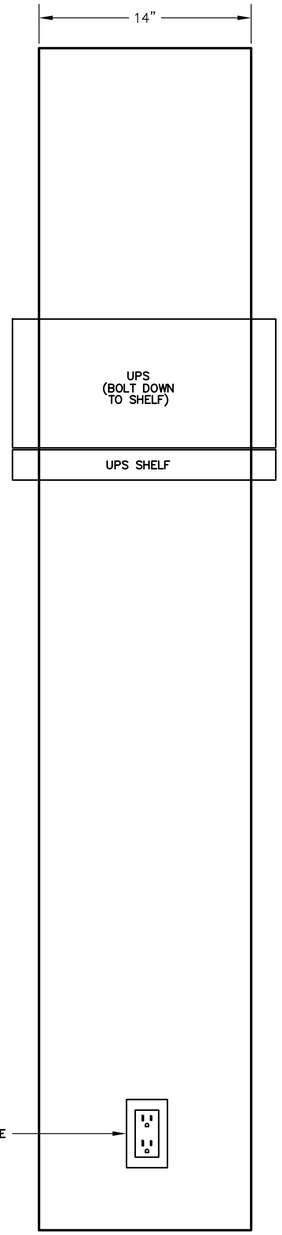

RIGHT

SIDEPAN LAYOUT (2)

- FINAL DESIGN -
FOR AGENCY APPROVAL ONLY
CONTINGENT

REGISTERED PROFESSIONAL ENGINEER
JOHN M. SIDDOTI
20532
Exp. 9-30-17
ELECTRICAL
STATE OF CALIFORNIA

FRISCH ENGINEERING, INC.
CONSULTING ELECTRICAL ENGINEERS
13405 FOLSOM BLVD, UNIT 600
FOLSOM, CA 95630
PH 916 353 1025
WWW.FRISCHENGINEERING.COM

ARCADIS

NO.	DATE	DESCRIPTION	GM/SPEC	DWN	CHKD	SUPV	APVD BY
1	11/18/15	FINAL DESIGN		MBY	TPF	JMS	RAO
0	9/8/14	PRE-FINAL (90%) DESIGN		MBY		TPF	

REVISIONS

APPROVED BY	
RAO	
SO	
SUPV	JMS
DSGN	MBY
DWN	MBY
CHKD	TPF
OK	JMS
DATE	
SCALES	N/A

TOPOCK GROUNDWATER REMEDIATION PROJECT
FRESH WATER PRE-INJECTION TREATMENT SYSTEM
CONTROL PANEL BACKPAN LAYOUT
GAS TRANSMISSION & DISTRIBUTION
PACIFIC GAS AND ELECTRIC COMPANY
SAN FRANCISCO, CALIFORNIA

MICROFILM	
BILL OF MATL	
DWG LIST	
SUPSDS	
SUPSD BY	
SHEET NO. of SHEETS	
E-13-05	REV 0

PLOT DATE: Nov 04, 2015 PLOT TIME: 3:19:21pm
FILENAME: FE-E-xxx-1305AD.dwg
N180B

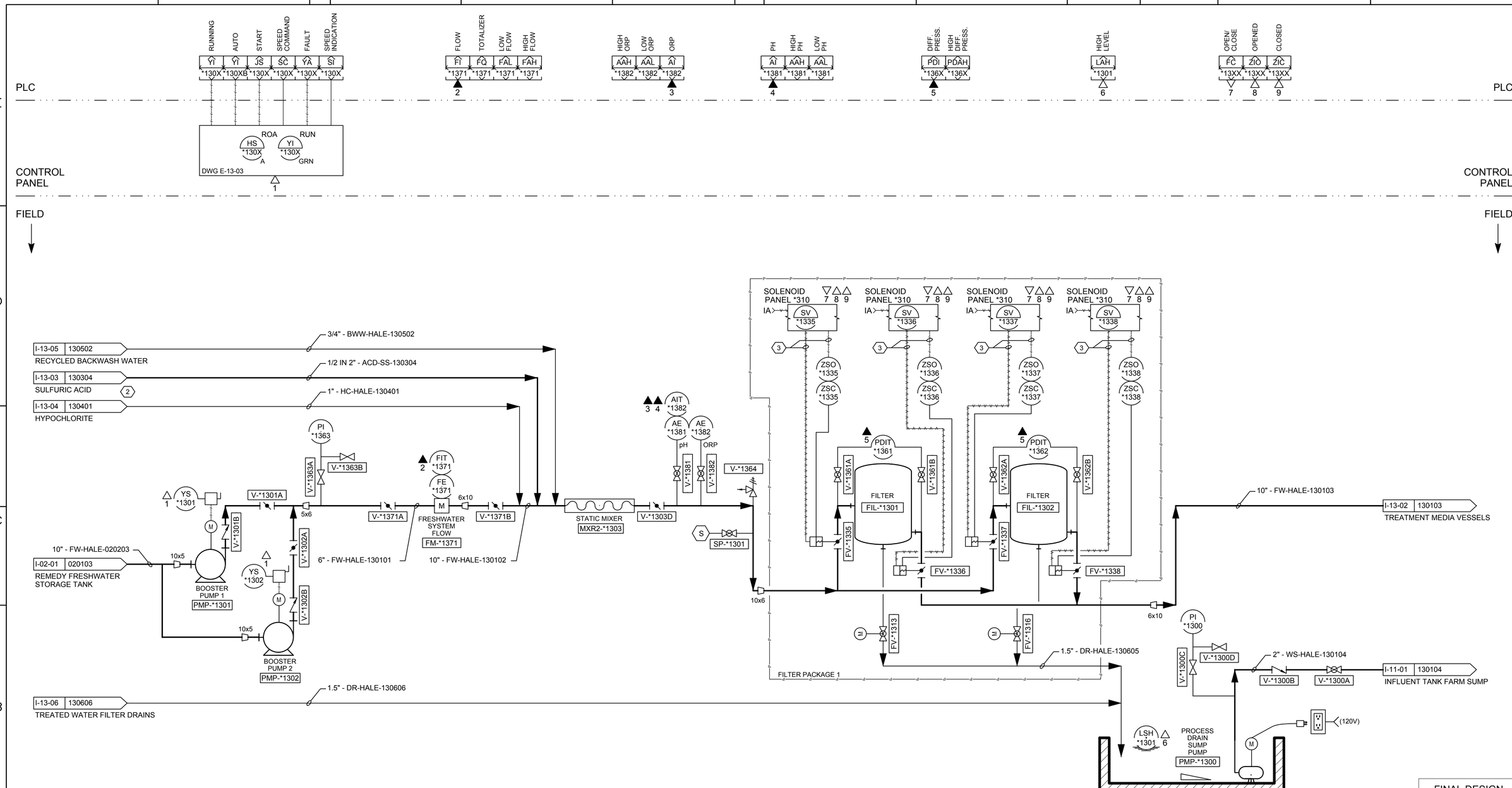

NOTES:

1. FOR FULL SCADA, INSTRUMENT AND EQUIPMENT TAG NUMBER IDENTIFICATION REPLACE "*" ON THIS DRAWING WITH LOCATION ID FWPTS.
2. 'X' IS A PLACEHOLDER TO ALLOW MULTIPLE DEVICES TO REFERENCE THE SAME I/O SYMBOL.

NOTES REFERENCED IN DRAWING:

1. THE EQUIPMENT AND FACLITIES SHOWN ARE PART OF A CONTINGENT SYSTEM AND MAY BE CONSTRUCTED IN THE FUTURE.
2. 93% SULFURIC ACID

- FINAL DESIGN - FOR AGENCY APPROVAL ONLY

REGISTERED PROFESSIONAL ENGINEER DRAYNE CAMPBELL No. C-072175 Exp. 06/30/16 CIVIL STATE OF CALIFORNIA

ETIC ENGINEERING

ARCADIS

NO.	DATE	DESCRIPTION	GM/SPEC	DWN	CHKD	SUPV	APVD BY
1	11/18/15	FINAL DESIGN		AJW	JPB	DAC	RAO
0	9/8/14	PRE-FINAL (90%) DESIGN		MBY			TPF

REVISIONS

APPROVED BY: RAO

SO / SUPV / DSGN / DWN / CHKD / OK / DATE / SCALES

TOPOCK GROUNDWATER REMEDIATION PROJECT

P&ID
FWPI TREATMENT SYSTEM
PRE-FILTERS

GAS TRANSMISSION & DISTRIBUTION
PACIFIC GAS AND ELECTRIC COMPANY
SAN FRANCISCO, CALIFORNIA

MICROFILM
BILL OF MATL
DWG LIST
SUPSDS
SUPSD BY
SHEET NO. of SHEETS
I-13-01
REV 1

11/03/2015, 17:25, G:\Graphics\AR\TOPOCK-01\Submittal_100%\DWGs\I-Instrumentation\I-13-01.dwg, Tab: I-13-01

N1808

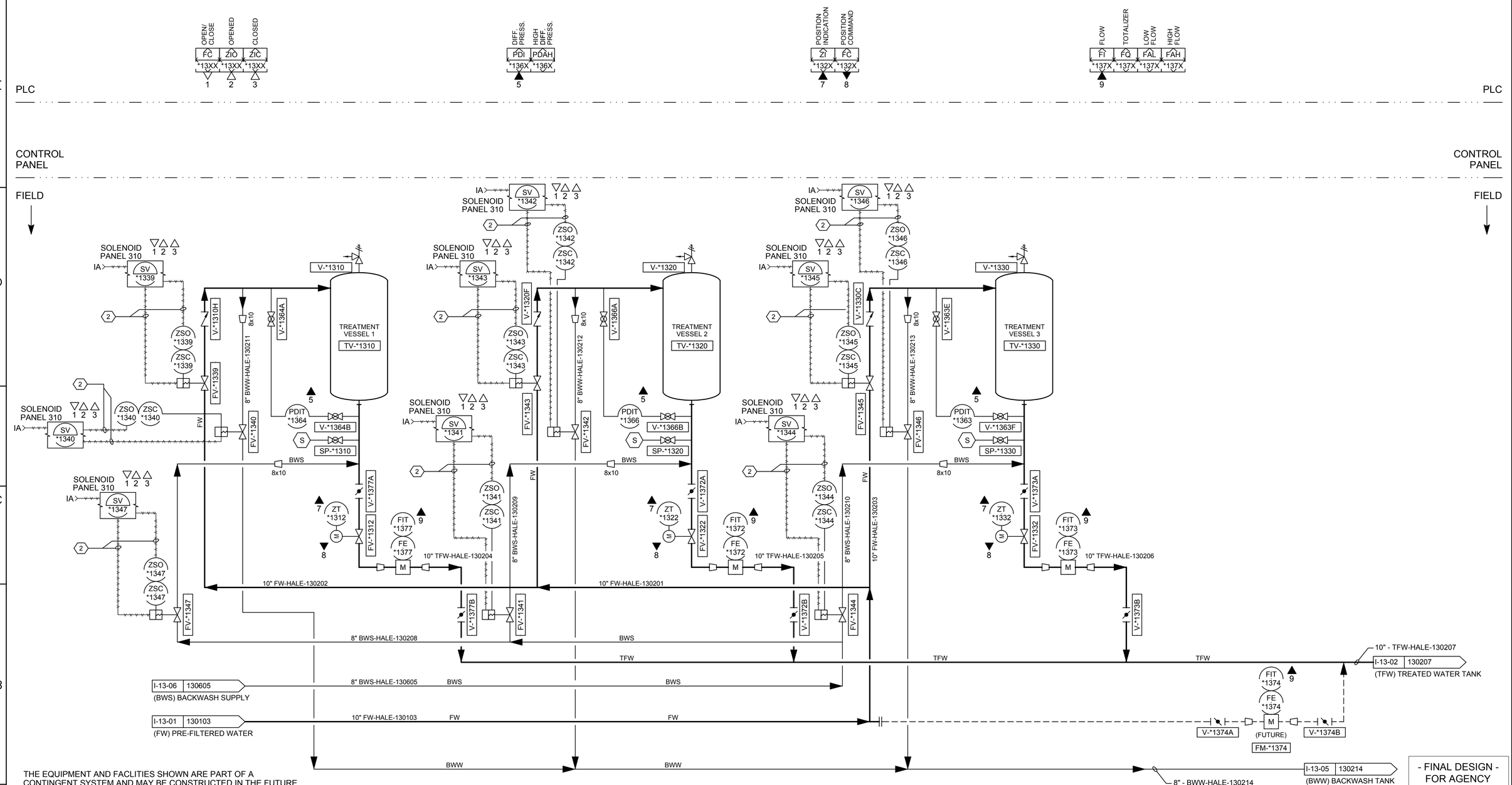

THE EQUIPMENT AND FACLITIES SHOWN ARE PART OF A CONTINGENT SYSTEM AND MAY BE CONSTRUCTED IN THE FUTURE.

DRAWING NOTES:

1. FOR FULL SCADA, INSTRUMENT AND EQUIPMENT TAG NUMBER IDENTIFICATION REPLACE "*" ON THIS DRAWING WITH LOCATION ID FWPTS.
2. 'X' IS A PLACEHOLDER TO ALLOW MULTIPLE DEVICES TO REFERENCE THE SAME I/O SYMBOL.

NOTES REFERENCED IN DRAWING:

1. THE EQUIPMENT AND FACLITIES SHOWN ARE PART OF A CONTINGENT SYSTEM AND MAY BE CONSTRUCTED IN THE FUTURE.
2. AIR TUBING AND CONTROL WIRES TO SOLENOID PANEL 310, TYPICAL FOR ALL PNEUMATIC VALVES.

- FINAL DESIGN - FOR AGENCY APPROVAL ONLY

REGISTERED PROFESSIONAL ENGINEER DRAYNE CAMPEAU No. C-072175 Exp. 06/30/16 CIVIL STATE OF CALIFORNIA

ETIC ENGINEERING

ARCADIS

NO.	DATE	DESCRIPTION	GM/SPEC	DWN	CHKD	SUPV	APVD BY
1	11/18/15	FINAL DESIGN		AJW	JPB	DAC	RAO
0	9/8/14	PRE-FINAL (90%) DESIGN		MBY			TPF

REVISIONS

APPROVED BY: RAO

SO / SUPV / DSGN / DWN / CHKD / OK / DATE / SCALES

TOPOCK GROUNDWATER REMEDIATION PROJECT

P&ID

FWPI TREATMENT SYSTEM MEDIA VESSELS

GAS TRANSMISSION & DISTRIBUTION

PACIFIC GAS AND ELECTRIC COMPANY

SAN FRANCISCO, CALIFORNIA

MICROFILM / BILL OF MATL / DWG LIST / SUPSDS / SUPSD BY / SHEET NO. of SHEETS

I-13-02 REV 1

11/03/2015, 17:26, G:\Graphics\AR\TOPOCK-01\Submittal_100%\DWGs\I-Instrumentation\I-13-02.dwg, Tab: I-13-02

N1808

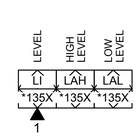

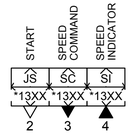

PLC

PLC

CONTROL PANEL

CONTROL PANEL

FIELD

FIELD

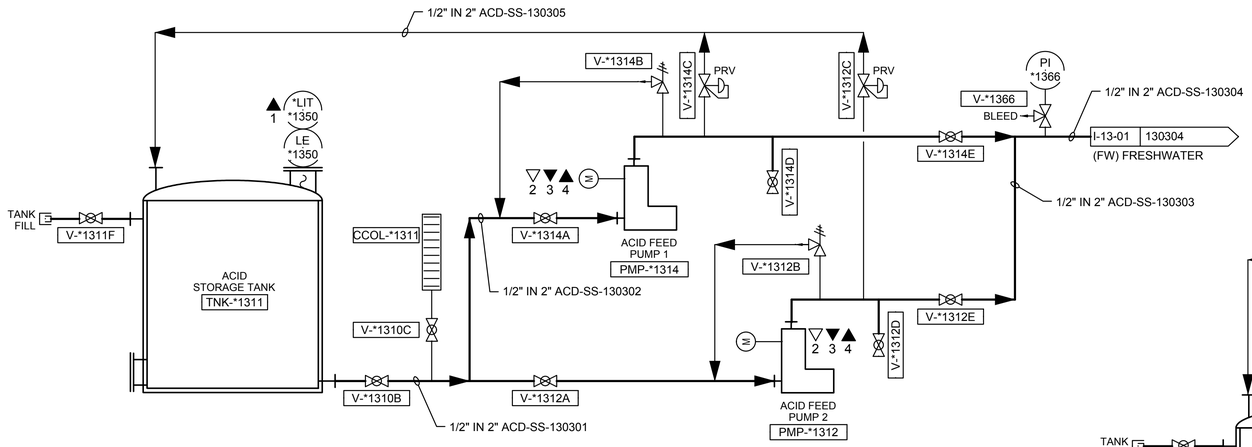

SULFURIC ACID FEED PACKAGE (2)

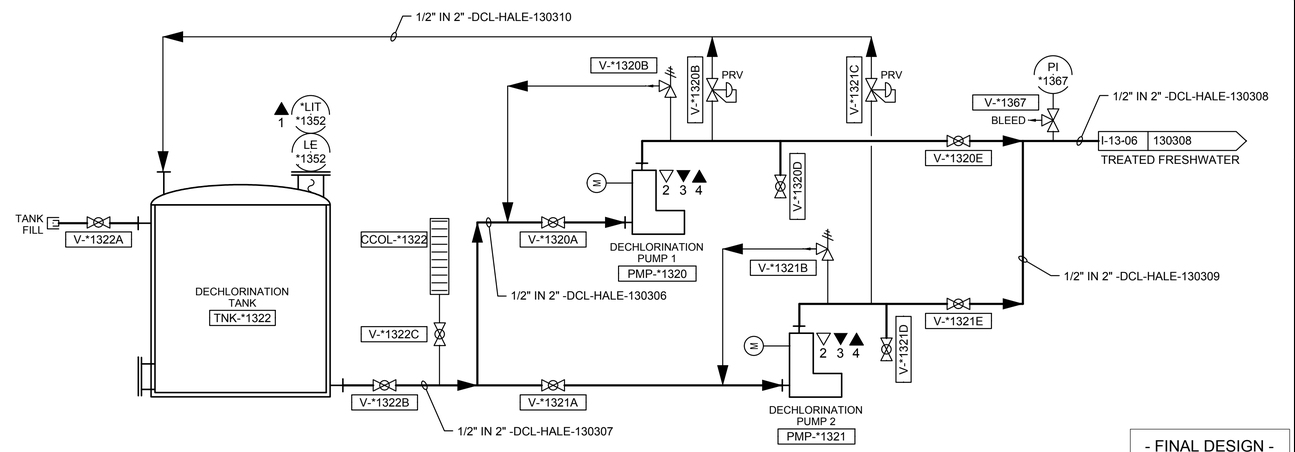

DECHLORINATION FEED PACKAGE

THE EQUIPMENT AND FACLITIES SHOWN ARE PART OF A CONTINGENT SYSTEM AND MAY BE CONSTRUCTED IN THE FUTURE.

DRAWING NOTES:

1. FOR FULL SCADA, INSTRUMENT AND EQUIPMENT TAG NUMBER IDENTIFICATION REPLACE "*" ON THIS DRAWING WITH LOCATION ID FWPTS.
2. 'X' IS A PLACEHOLDER TO ALLOW MULTIPLE DEVICES TO REFERENCE THE SAME I/O SYMBOL.

NOTES REFERENCED IN DRAWING:

(1) THE EQUIPMENT AND FACLITIES SHOWN ARE PART OF A CONTINGENT SYSTEM AND MAY BE CONSTRUCTED IN THE FUTURE.

(2) 93% SULFURIC ACID

- FINAL DESIGN - FOR AGENCY APPROVAL ONLY

REGISTERED PROFESSIONAL ENGINEER
DWAYNE CAMPBELL
No. C 072175
Exp 06/30/16
CIVIL
STATE OF CALIFORNIA

ETIC ENGINEERING

ARCADIS

NO.	DATE	DESCRIPTION	GM/SPEC	DWN	CHKD	SUPV	APVD BY
1	11/18/15	FINAL DESIGN	AJW	JPB	DAC	RAO	
0	9/8/14	PRE-FINAL (90%) DESIGN	MBY			TPF	

REVISIONS

APPROVED BY	
RAO	SO
	SUPV
	DSGN
	DWN
	CHKD
	OK
	DATE
	SCALES

TOPOCK GROUNDWATER REMEDIATION PROJECT

P&ID

FWPI TREATMENT SYSTEM CHEMICAL STORAGE 1

GAS TRANSMISSION & DISTRIBUTION

PACIFIC GAS AND ELECTRIC COMPANY

SAN FRANCISCO, CALIFORNIA

MICROFILM	
BILL OF MATL	
DWG LIST	
SUPSDS	
SUPSD BY	
SHEET NO. of SHEETS	
I-13-03	REV 1

N1808

11/03/2015, 17:26, G:\Graphics\AR\TOPOCK-01\Submittal_100%\DWG\I-Instrumentation\I-13-03.dwg, Tab: I-13-03

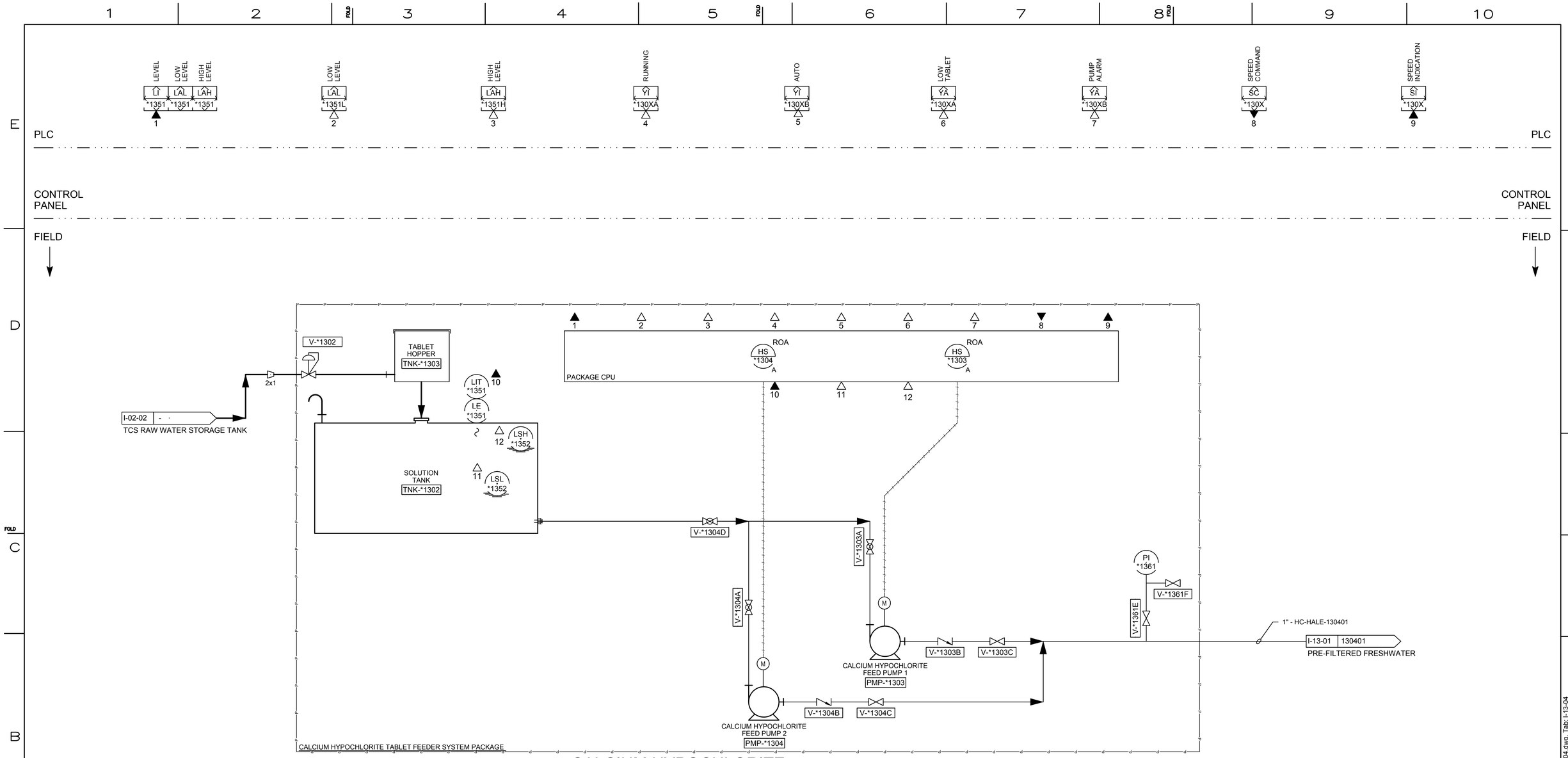

CALCIUM HYPOCHLORITE TABLET FEEDER SYSTEM PACKAGE

NOTES:

1. FOR FULL SCADA, INSTRUMENT AND EQUIPMENT TAG NUMBER IDENTIFICATION REPLACE "*" ON THIS DRAWING WITH LOCATION ID FWPTS.
2. 'X' IS A PLACEHOLDER TO ALLOW MULTIPLE DEVICES TO REFERENCE THE SAME I/O SYMBOL.

NOTES REFERENCED IN DRAWING:

1. THE EQUIPMENT AND FACLITIES SHOWN ARE PART OF A CONTINGENT SYSTEM AND MAY BE CONSTRUCTED IN THE FUTURE.

- FINAL DESIGN - FOR AGENCY APPROVAL ONLY

REGISTERED PROFESSIONAL ENGINEER DWAYNE CAMPBELL No. C-072175 Exp. 06/30/16 CIVIL STATE OF CALIFORNIA

ETIC ENGINEERING

ARCADIS

NO.	DATE	DESCRIPTION	GM/SPEC	DWN	CHKD	SUPV	APVD BY
1	11/18/15	FINAL DESIGN		AJW	JPB	DAC	RAO
0	9/8/14	PRE-FINAL (90%) DESIGN		MBY			TPF

REVISIONS

APPROVED BY: RAO

SO / SUPV / DSGN / DWN / CHKD / OK / DATE / SCALES

TOPOCK GROUNDWATER REMEDIATION PROJECT

P&ID
FWPI TREATMENT SYSTEM
CHEMICAL STORAGE 2
GAS TRANSMISSION & DISTRIBUTION
PACIFIC GAS AND ELECTRIC COMPANY
SAN FRANCISCO, CALIFORNIA

MICROFILM / BILL OF MATL / DWG LIST / SUPSDS / SUPSD BY / SHEET NO. of SHEETS

I-13-04 REV 1

11/03/2015, 17:26, G:\Graphics\AR\TOPOCK-01\Submittal_100%\DWGs\I-Instrumentation\I-13-04.dwg, Tab: I-13-04

N1808

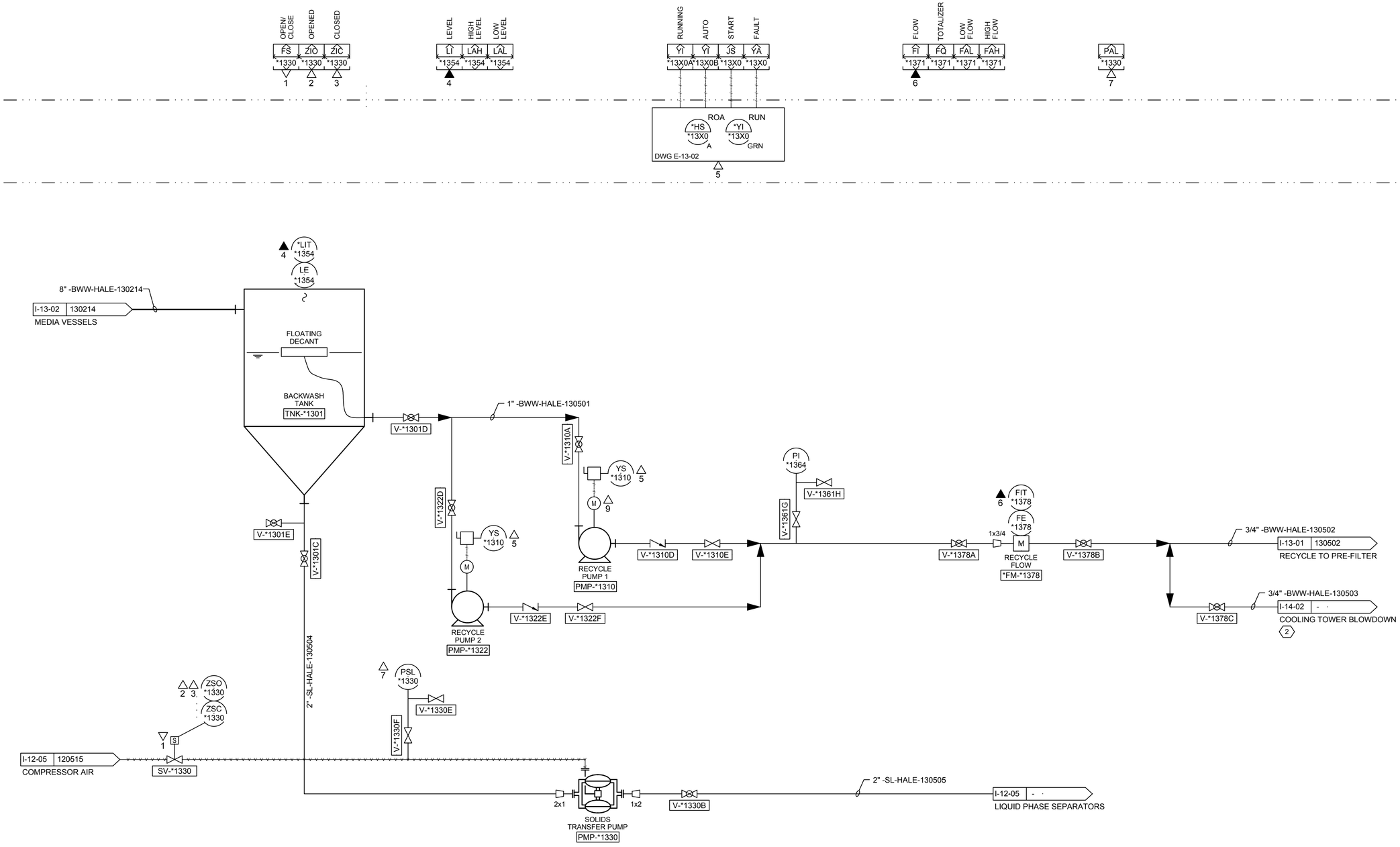

NOTES:

1. FOR FULL SCADA, INSTRUMENT AND EQUIPMENT TAG NUMBER IDENTIFICATION REPLACE "*" ON THIS DRAWING WITH LOCATION ID FWPTS.
2. 'X' IS A PLACEHOLDER TO ALLOW MULTIPLE DEVICES TO REFERENCE THE SAME I/O SYMBOL.

NOTES REFERENCED IN DRAWING:

(1) THE EQUIPMENT AND FACLITIES SHOWN ARE PART OF A CONTINGENT SYSTEM AND MAY BE CONSTRUCTED IN THE FUTURE.

(2) BLOWDOWN LINE CONNECTS TO TCS WASTEWATER TANK AND IS PUMPED FROM THERE TO EVAPORATION PONDS.

- FINAL DESIGN - FOR AGENCY APPROVAL ONLY

REGISTERED PROFESSIONAL ENGINEER — DWAYNE CAMPBELL — No. C 072175 — Exp 06/30/16 — CIVIL — STATE OF CALIFORNIA

ETIC ENGINEERING

ARCADIS

NO.	DATE	DESCRIPTION	GM/SPEC	DWN	CHKD	SUPV	APVD BY
1	11/18/15	FINAL DESIGN	AJW	JPB	DAC	RAO	
0	9/8/14	PRE-FINAL (90%) DESIGN	MBY			TPF	

REVISIONS

APPROVED BY	
RAO	SO
	SUPV
	DSGN
	DWN
	CHKD
	OK
	DATE
	SCALES

TOPOCK GROUNDWATER REMEDIATION PROJECT

P&ID

FWPI TREATMENT SYSTEM BACKWASH SYSTEM

GAS TRANSMISSION & DISTRIBUTION

PACIFIC GAS AND ELECTRIC COMPANY

SAN FRANCISCO, CALIFORNIA

MICROFILM	
BILL OF MATL	
DWG LIST	
SUPSDS	
SUPSD BY	
SHEET NO.	of SHEETS
I-13-05	REV 1

N1808

11/03/2015, 17:26, G:\Graphics\ART\TOPOCK-01\Submittal_100%\DWGs\I-Instrumentation\I-13-05.dwg, Tab: I-13-05

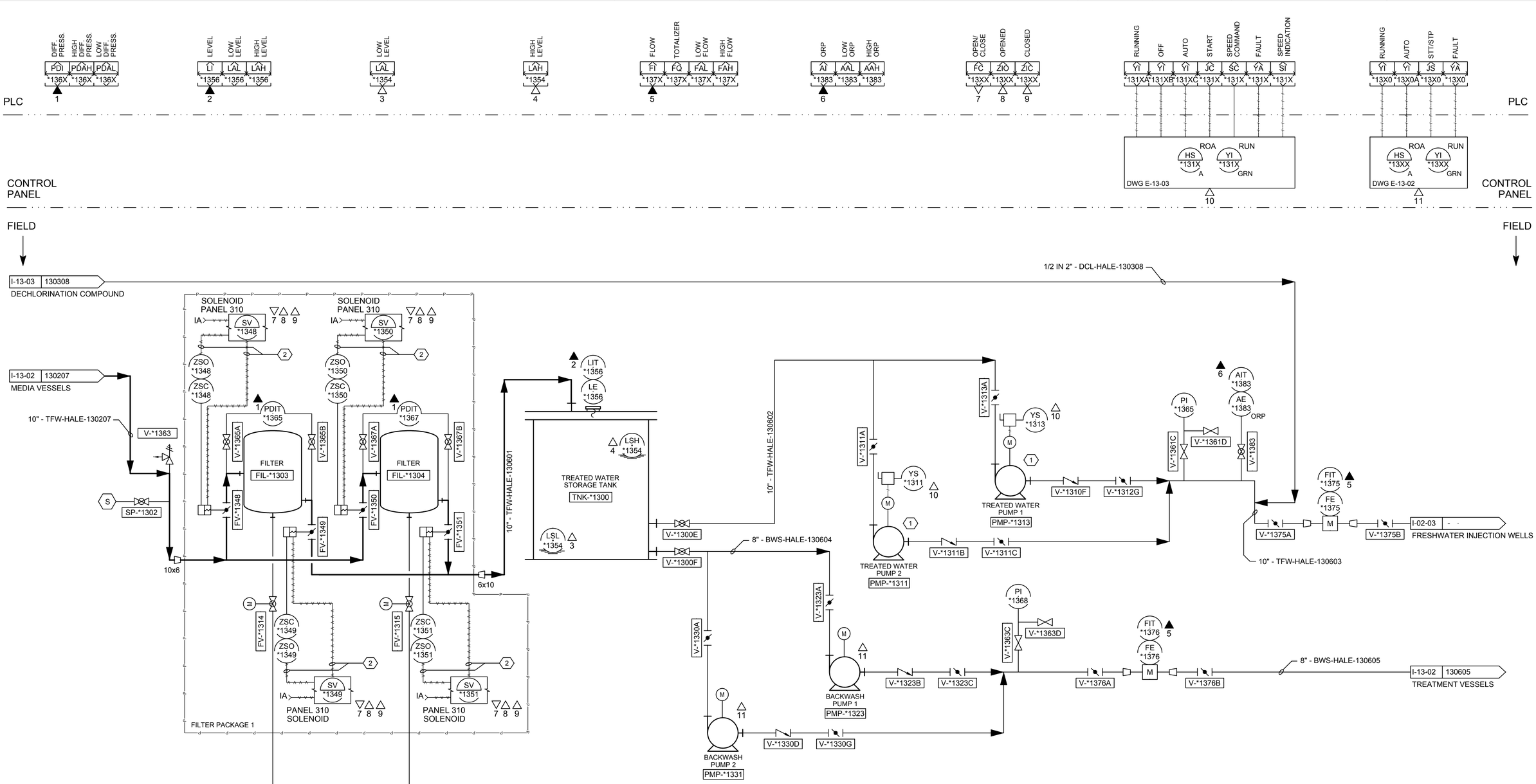

NOTES:

1. FOR FULL SCADA, INSTRUMENT AND EQUIPMENT TAG NUMBER IDENTIFICATION REPLACE "*" ON THIS DRAWING WITH LOCATION ID FWPTS.
2. 'X' IS A PLACEHOLDER TO ALLOW MULTIPLE DEVICES TO REFERENCE THE SAME I/O SYMBOL.

NOTES REFERENCED IN DRAWING:

(1) ONLY REQUIRED IF FRESHWATER AND RIVERBANK BLENDING IS REQUIRED AT THE IRL WELLS

(2) THE EQUIPMENT AND FACLITIES SHOWN ARE PART OF A CONTINGENT SYSTEM AND MAY BE CONSTRUCTED IN THE FUTURE.

- FINAL DESIGN - FOR AGENCY APPROVAL ONLY

REGISTERED PROFESSIONAL ENGINEER DWAYNE CAMPBELL No. C 072175 Exp 06/30/16 CIVIL STATE OF CALIFORNIA

ETIC ENGINEERING

ARCADIS

NO.	DATE	DESCRIPTION	GM/SPEC	DWN	CHKD	SUPV	APVD BY
1	11/18/15	FINAL DESIGN	AJW	JPB	DAC	RAO	
0	9/8/14	PRE-FINAL (90%) DESIGN	MBY			TPF	

REVISIONS

APPROVED BY	SO
RAO	SUPV
	DSGN
	DWN
	CHKD
	OK
	DATE
	SCALES

TOPOCK GROUNDWATER REMEDIATION PROJECT

P&ID

FWPI TREATMENT SYSTEM TREATED WATER

GAS TRANSMISSION & DISTRIBUTION

PACIFIC GAS AND ELECTRIC COMPANY

SAN FRANCISCO, CALIFORNIA

MICROFILM	
BILL OF MATL	
DWG LIST	
SUPSDS	
SUPSD BY	
SHEET NO.	of SHEETS
I-13-06	REV 1

11/03/2015, 17:27, G:\Graphics\ARITOPOCK-01\Submittal_100%\DWGs\I-Instrumentation\I-13-06.dwg, Tab: I-13-06

N1808

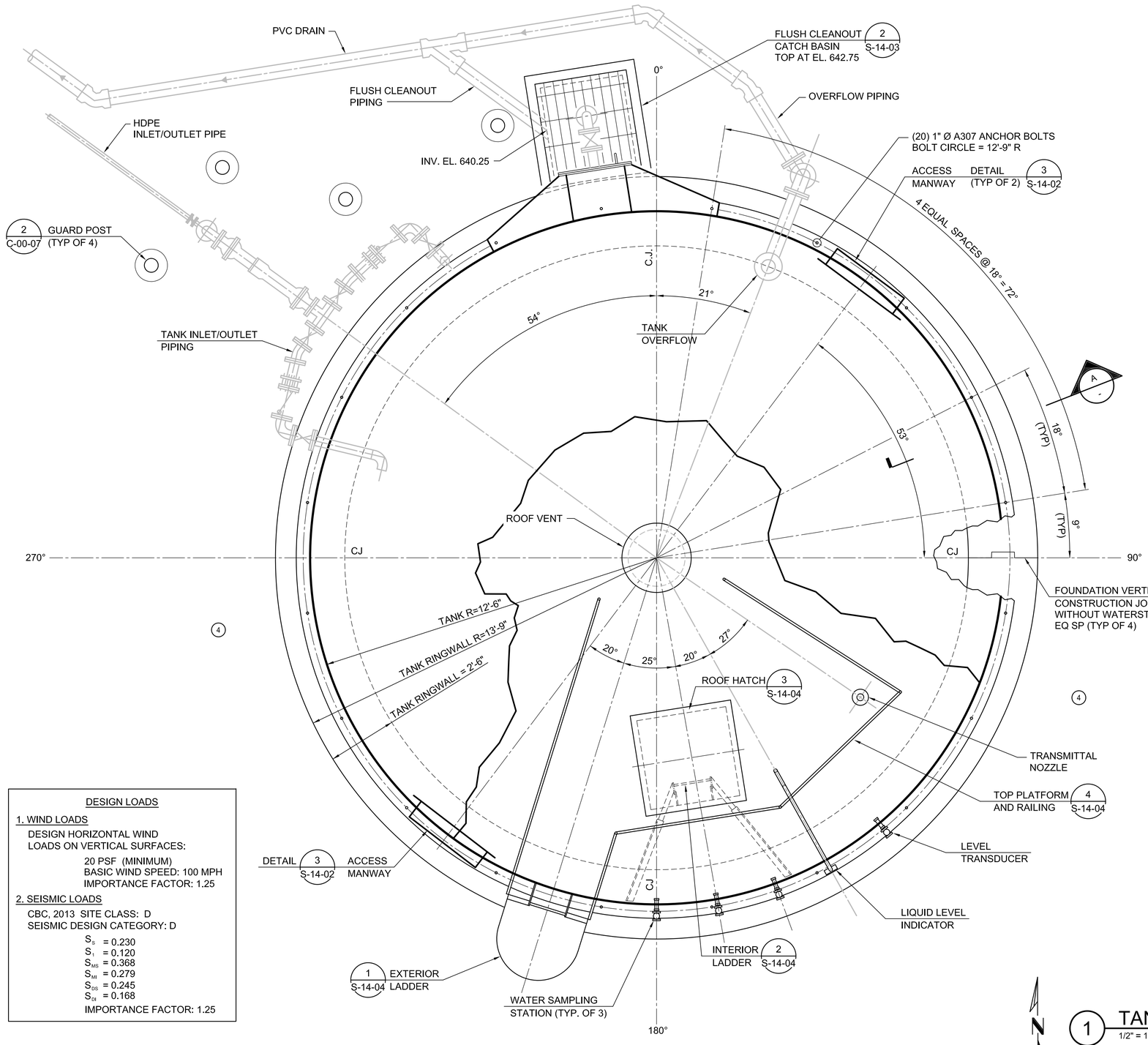

1 TANK FOUNDATION PLAN
1/2" = 1'-0"

C-10-06, S-14-08

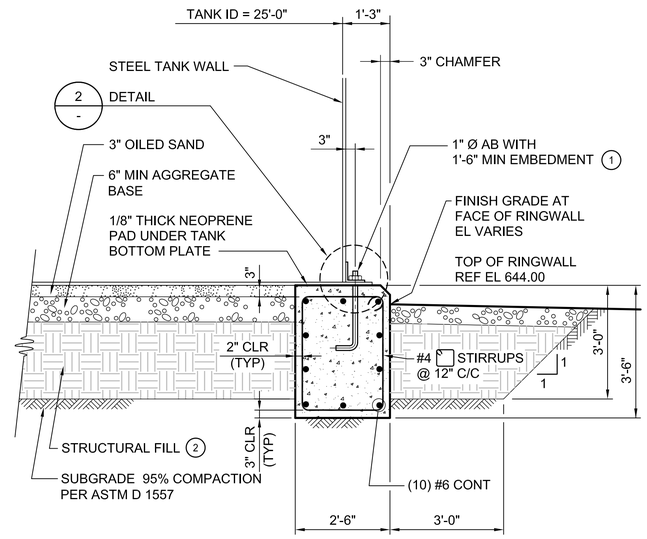

A SECTION
1/2" = 1'-0"

2 DETAIL
1" = 1'-0"

DESIGN LOADS

1. WIND LOADS

DESIGN HORIZONTAL WIND
LOADS ON VERTICAL SURFACES:

20 PSF (MINIMUM)
BASIC WIND SPEED: 100 MPH
IMPORTANCE FACTOR: 1.25

2. SEISMIC LOADS

CBC, 2013 SITE CLASS: D
SEISMIC DESIGN CATEGORY: D

S_S = 0.230
S_1 = 0.120
S_{MS} = 0.368
S_{M1} = 0.279
S_{DS} = 0.245
S_{D1} = 0.168

IMPORTANCE FACTOR: 1.25

KEY NOTES:

1. PROVIDE WASHER AND NUT. NUT SHALL BE FINGER TIGHT ONLY, DO NOT TORQUE IT.
2. ALL EXISTING SOIL TO THE ELEVATION OF 641.00 SHALL BE REMOVED AND BACKFILLED WITH STRUCTURAL FILL MATERIAL PER SPECS AND AS INDICATED ON DRAWINGS.
3. NOT USED.
4. FOR TANK ACCESS ROAD AND RETAINING WALL SEE DWG. C-10-06 AND DWG. S-14-08.

- FINAL DESIGN -
FOR AGENCY
APPROVAL ONLY

REGISTERED PROFESSIONAL ENGINEER
VINOD M. BADANI
C-041281
EXP. DATE 3/31/17
CIVIL
STATE OF CALIFORNIA

E2 Consulting Engineers, Inc.
1900 Powell Street, Ste. 250
Emeryville, CA 94608
(510) 652-1164

ARCADIS

NO.	DATE	DESCRIPTION	GM/SPEC	DWN	CHKD	SUPV	APVD BY
2	11/18/15	FINAL DESIGN		MD	KJ	VMB	RAO
1	9/8/14	PRE-FINAL (90%) DESIGN		WTH	KJ	VMB	VMB
0	4/5/13	INTERMEDIATE (60%) DESIGN		WTH	KJ	VMB	VMB

REVISIONS

APPROVED BY	
	SO
RAO	SUPV
	DSGN
	DWN
	CHKD
	OK
	DATE
	SCALES AS SHOWN

TOPOCK GROUNDWATER REMEDIATION PROJECT
CONDITIONED WATER STORAGE TANK FOUNDATION PLAN AND DETAILS
GAS TRANSMISSION & DISTRIBUTION
PACIFIC GAS AND ELECTRIC COMPANY
SAN FRANCISCO, CALIFORNIA

MICROFILM	
BILL OF MATL	
DWG LIST	
SUPSDS	
SUPSD BY	
SHEET NO.	of SHEETS
S-14-01	REV 1

E2-S-XXX-1401.dwg

N1808

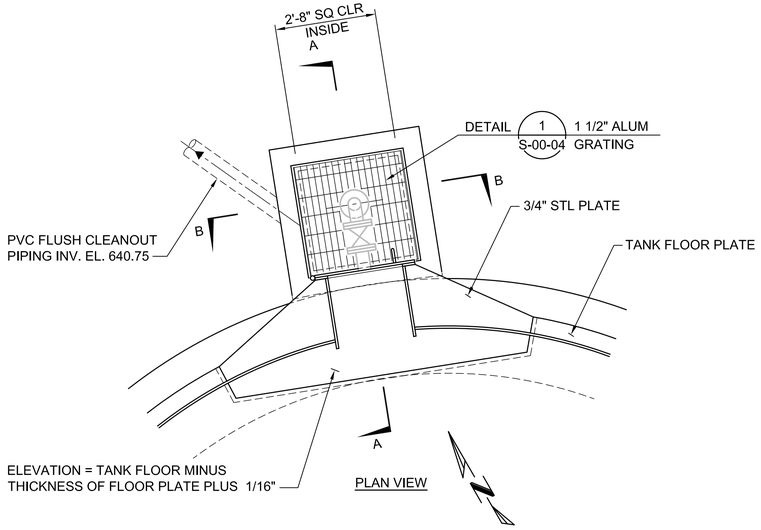

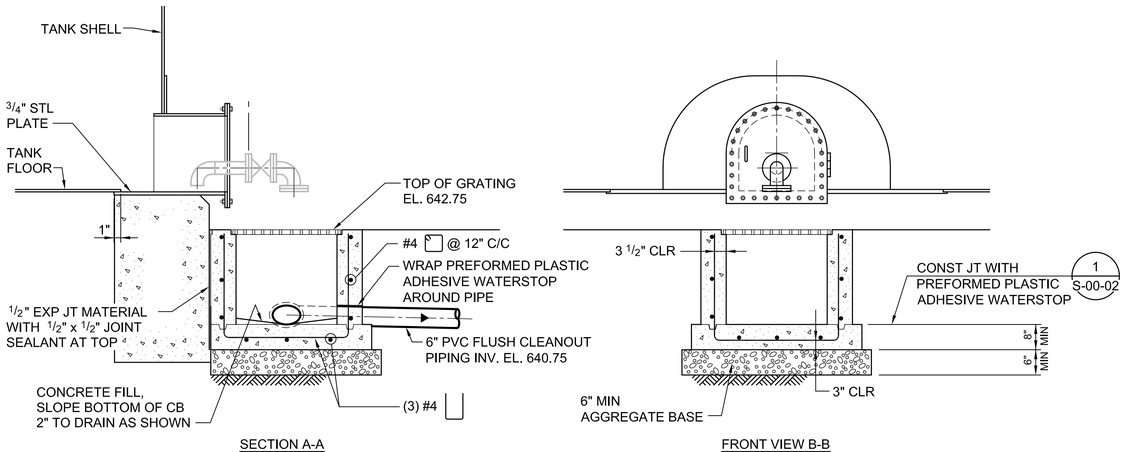

FLUSH CLEANOUT CATCH BASIN

2 DETAIL

1/2" = 1'-0"

S-14-01
M-02-04

- FINAL DESIGN -
FOR AGENCY
APPROVAL ONLY

REGISTERED PROFESSIONAL ENGINEER
VINOD M. BADANI
C-041281
EXP. DATE 3/31/17
CIVIL
STATE OF CALIFORNIA

E2 Consulting Engineers, Inc.
1900 Powell Street, Ste. 250
Emeryville, CA 94608
(510) 652-1164

ARCADIS

NO.	DATE	DESCRIPTION	GM/SPEC	DWN	CHKD	SUPV	APVD BY
2	11/18/15	FINAL DESIGN		MD	KJ	VMB	RAO
1	9/8/14	PRE-FINAL (90%) DESIGN		WTH	KJ	VMB	VMB
0	4/5/13	INTERMEDIATE (60%) DESIGN		WTH	KJ	VMB	VMB

REVISIONS

APPROVED BY	RAO
SO	
SUPV	
DSGN	
DWN	
CHKD	
OK	
DATE	
SCALES	AS SHOWN

TOPOCK GROUNDWATER REMEDIATION PROJECT
CONDITIONED WATER STORAGE TANK SECTIONS AND DETAILS
GAS TRANSMISSION & DISTRIBUTION
PACIFIC GAS AND ELECTRIC COMPANY
SAN FRANCISCO, CALIFORNIA

MICROFILM	
BILL OF MATL	
DWG LIST	
SUPSDS	
SUPSD BY	
SHEET NO.	of SHEETS
S-14-03	REV 1

E2-S-XXX-1403.dwg

N1808

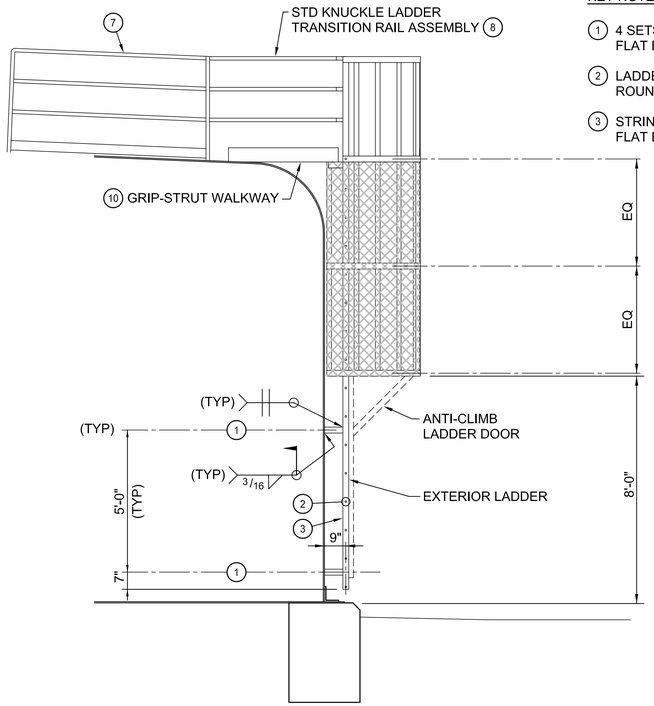

SIDE VIEW

KEY NOTES:

1. 4 SETS, LADDER LEG FLAT BAR 3/8" x 2 1/2" x 7 3/4"
2. LADDER RUNG ROUND BAR 3/4" DIA. 16"
3. STRINGER FLAT BAR 3/8" x 2 1/2"

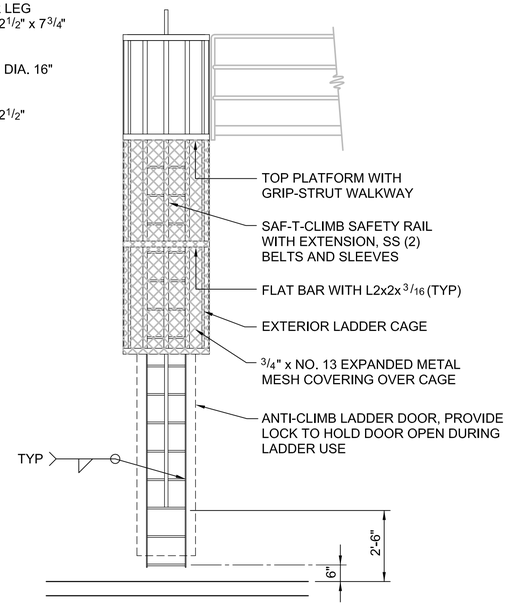

FRONT VIEW

EXTERIOR LADDER

1 DETAIL

3/8" = 1'-0"

S-14-01
S-02-03

KEY NOTES:

4. 3 SETS, LADDER LEG, SS 316 L 3 x 3 x 1/4
5. LADDER RUNG, SS 316 ROUND BAR 3/4" DIA 16"
6. STRINGER, SS 316 FLAT BAR 3/8" x 2 1/2"

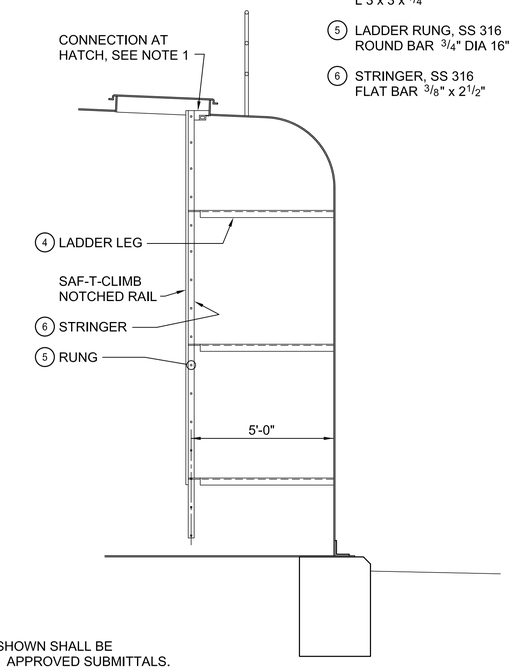

SIDE VIEW

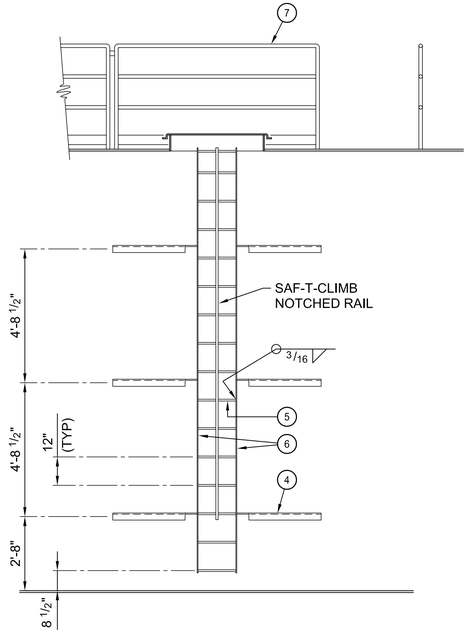

FRONT VIEW

INTERIOR LADDER

2 DETAIL

3/8" = 1'-0"

S-14-01

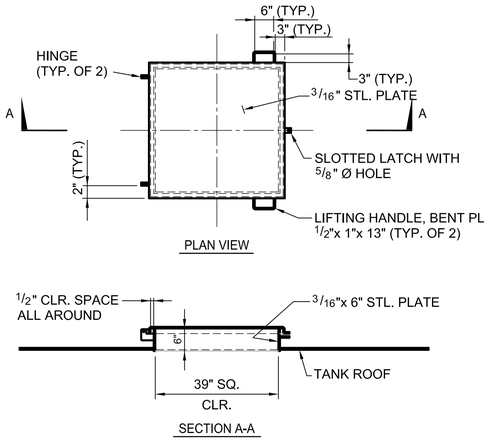

PLAN VIEW

SECTION A-A

ROOF HATCH

3 DETAIL

1/2" = 1'-0"

S-14-01

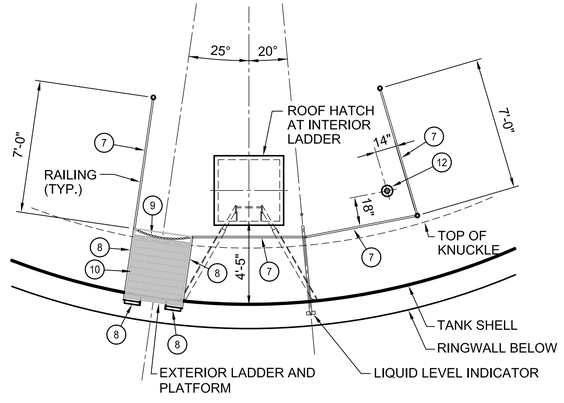

PLAN

KEY NOTES (CONT.)

7. 3'-6" HIGH 1 1/4" Ø SCH 40 PIPE HANDRAIL AND POSTS
8. STANDARD KNUCKLE LADDER TRANSITION RAIL ASSEMBLY, 1 1/4" SCH 40 PIPE
9. 3/16"x 40" CHAIN WITH 3/16" SNAP HASP AND HALF LINK OF CHAIN WELDED TO POST TO ACCEPT HASP
10. GRIPSTRUT PLATFORM 10 GA. 36"x 30" LONG WITH GRIPSTRUT ANCHORING DEVICE (FOR PLATFORMS)
11. FLAT BAR, 1/4"x 2"x 2" LONG
12. TRANSMITTER NOZZLE

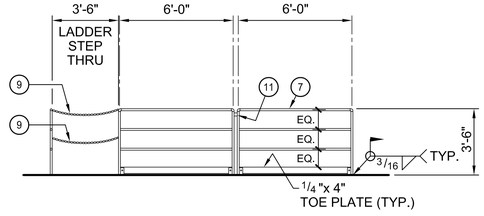

RAILING ELEVATION

TOP PLATFORM

4 DETAIL

N.T.S.

S-14-01

- FINAL DESIGN - FOR AGENCY APPROVAL ONLY

REGISTERED PROFESSIONAL ENGINEER
VINOD M. BADANI
C-041281
EXP. DATE 3/31/17
CIVIL
STATE OF CALIFORNIA

E2 Consulting Engineers, Inc.
1900 Powell Street, Ste. 250
Emeryville, CA 94608
(510) 652-1164

ARCADIS

NO.	DATE	DESCRIPTION	GM/SPEC	DWN	CHKD	SUPV	APVD	BY
2	11/18/15	FINAL DESIGN		MD	KJ	VMB	RAO	
1	9/8/14	PRE-FINAL (90%) DESIGN		WTH	KJ	VMB	VMB	
0	4/5/13	INTERMEDIATE (60%) DESIGN		WTH	KJ	VMB	VMB	

REVISIONS

APPROVED BY	
	SO
RAO	SUPV
	DSGN
	DWN
	CHKD
	OK
	DATE
	SCALES AS SHOWN

TOPOCK GROUNDWATER REMEDIATION PROJECT

CONDITIONED WATER STORAGE TANK DETAILS

GAS TRANSMISSION & DISTRIBUTION

PACIFIC GAS AND ELECTRIC COMPANY
SAN FRANCISCO, CALIFORNIA

MICROFILM	
BILL OF MATL	
DWG LIST	
SUPSDS	
SUPSD BY	
SHEET NO.	of SHEETS
S-14-04	REV 1

E2-S-XXX-1404.dwg

N1808

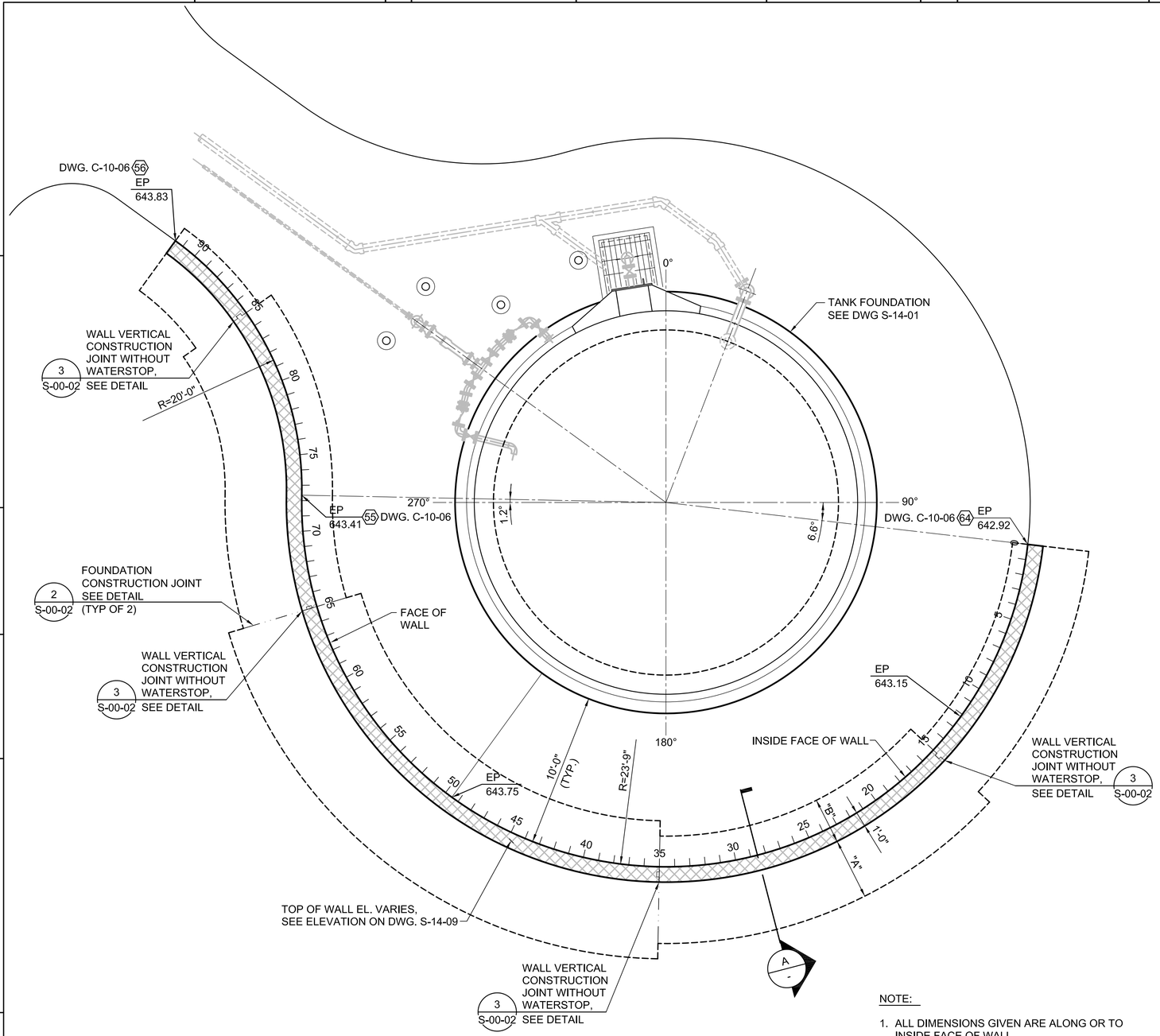

1 TANK RETAINING WALL PLAN
1/4" = 1'-0"
S-14-01
C-10-06

NOTE:

1. ALL DIMENSIONS GIVEN ARE ALONG OR TO INSIDE FACE OF WALL.

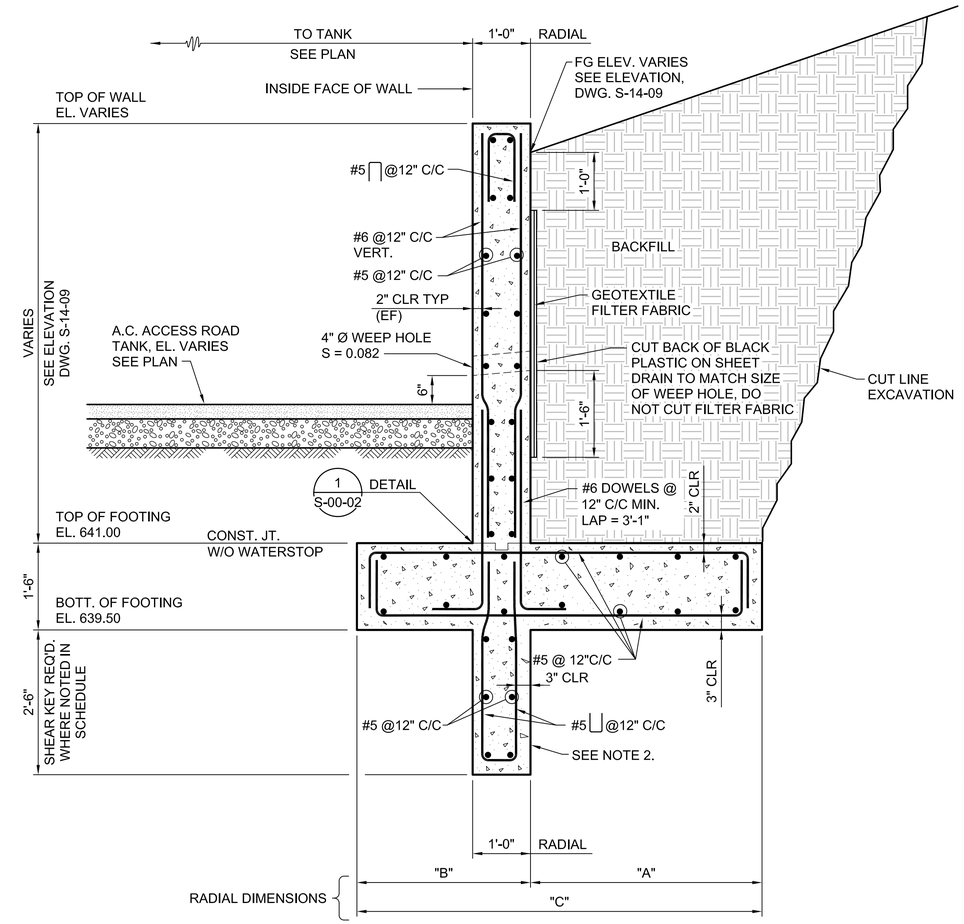

A SECTION
3/4" = 1'-0"
-
S-14-09

NOTES:

1. FOR GENERAL STRUCTURAL NOTES SEE DWG. S-00-01.
2. SHEAR KEY TO BE POURED WITH FOOTING (NO CONSTRUCTION JOINT).

SCHEDULE				
STATION	DIM. "A"	DIM. "B"	DIM. "C"	KEY
0 TO 5	3'-0"	2'-0"	5'-0"	NO
5 TO 15	3'-0"	2'-0"	5'-0"	YES
15 TO 35	4'-0"	3'-0"	7'-0"	YES
35 TO 65	5'-0"	4'-0"	9'-0"	YES
65 TO 85	4'-0"	3'-0"	7'-0"	YES
85 TO 92	3'-0"	2'-0"	5'-0"	NO

- FINAL DESIGN -
FOR AGENCY
APPROVAL ONLY

REGISTERED PROFESSIONAL ENGINEER
VINOD M. BADANI
C-041281
EXP. DATE 3/31/17
CIVIL
STATE OF CALIFORNIA

E2 Consulting Engineers, Inc.
1900 Powell Street, Ste. 250
Emeryville, CA 94608
(510) 652-1164

ARCADIS

NO.	DATE	DESCRIPTION	GM/SPEC	DWN	CHKD	SUPV	APVD BY
1	11/18/15	FINAL DESIGN	MD	KJ	VMB	RAO	
0	9/08/14	PRE-FINAL (90%) DESIGN	WTH	KDD	VMB	VMB	

REVISIONS

APPROVED BY	
RAO	SO
	SUPV
	DSGN
	DWN
	CHKD
	OK
	DATE
	SCALES AS SHOWN

TOPOCK GROUNDWATER REMEDIATION PROJECT
CONDITIONED WATER STORAGE TANK RETAINING WALL PLAN AND SECTIONS
GAS TRANSMISSION & DISTRIBUTION
PACIFIC GAS AND ELECTRIC COMPANY
SAN FRANCISCO, CALIFORNIA

MICROFILM	
BILL OF MATL	
DWG LIST	
SUPSDS	
SUPSD BY	
SHEET NO.	of SHEETS
S-14-08	REV 0

E2-S-XXX-1408

N1808

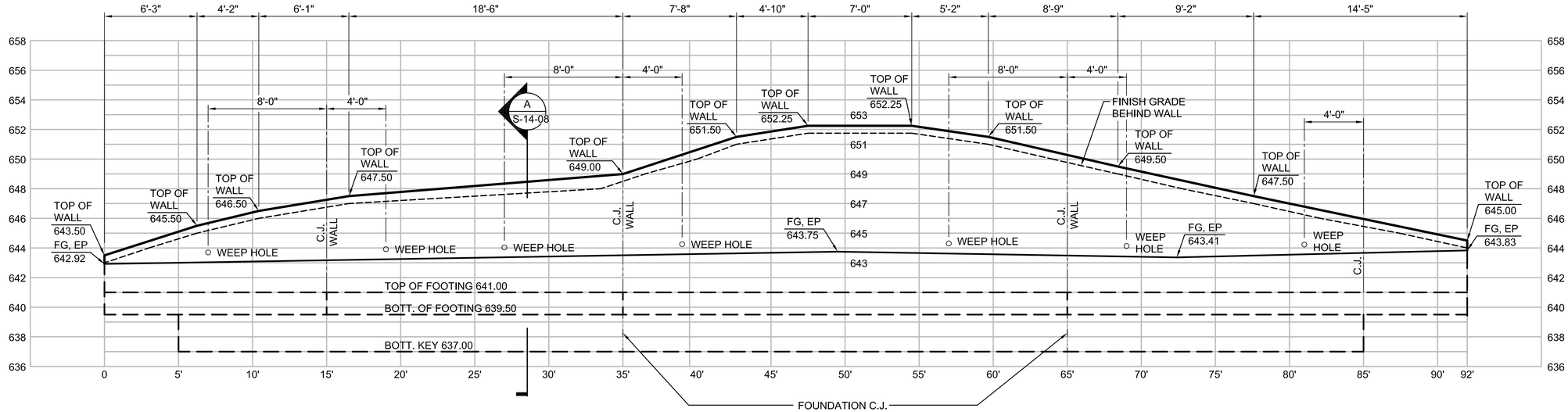

NOTES:

1. DIMENSIONS MEASURED ALONG THE INSIDE FACE OF WALL.

A TANK RETAINING WALL DEVELOPED ELEVATION - INSIDE FACE OF WALL

1/4" = 1'-0"

A
S-14-08

- FINAL DESIGN -
FOR AGENCY
APPROVAL ONLY

REGISTERED PROFESSIONAL ENGINEER
VINOD M. BADANI
C-041281
EXP. DATE 3/31/17
CIVIL
STATE OF CALIFORNIA

E2 Consulting Engineers, Inc.
1900 Powell Street, Ste. 250
Emeryville, CA 94608
(510) 652-1164

ARCADIS

NO.	DATE	DESCRIPTION	GM/SPEC	DWN	CHKD	SUPV	APVD BY
1	11/18/15	FINAL DESIGN		MD	KJ	VMB	RAO
0	9/8/14	PRE-FINAL (90%) DESIGN		WTH	KDD	VMB	VMB

REVISIONS

APPROVED BY	SO
RAO	SUPV
	DSGN
	DWN
	CHKD
	OK
	DATE
	SCALES AS SHOWN

TOPOCK GROUNDWATER REMEDIATION PROJECT
CONDITIONED WATER STORAGE TANK RETAINING WALL ELEVATION
GAS TRANSMISSION & DISTRIBUTION
PACIFIC GAS AND ELECTRIC COMPANY
SAN FRANCISCO, CALIFORNIA

MICROFILM	
BILL OF MATL	
DWG LIST	
SUPSDS	
SUPSD BY	
SHEET NO.	of SHEETS
S-14-09	REV 0

E2-S-XXX-1409

N1808

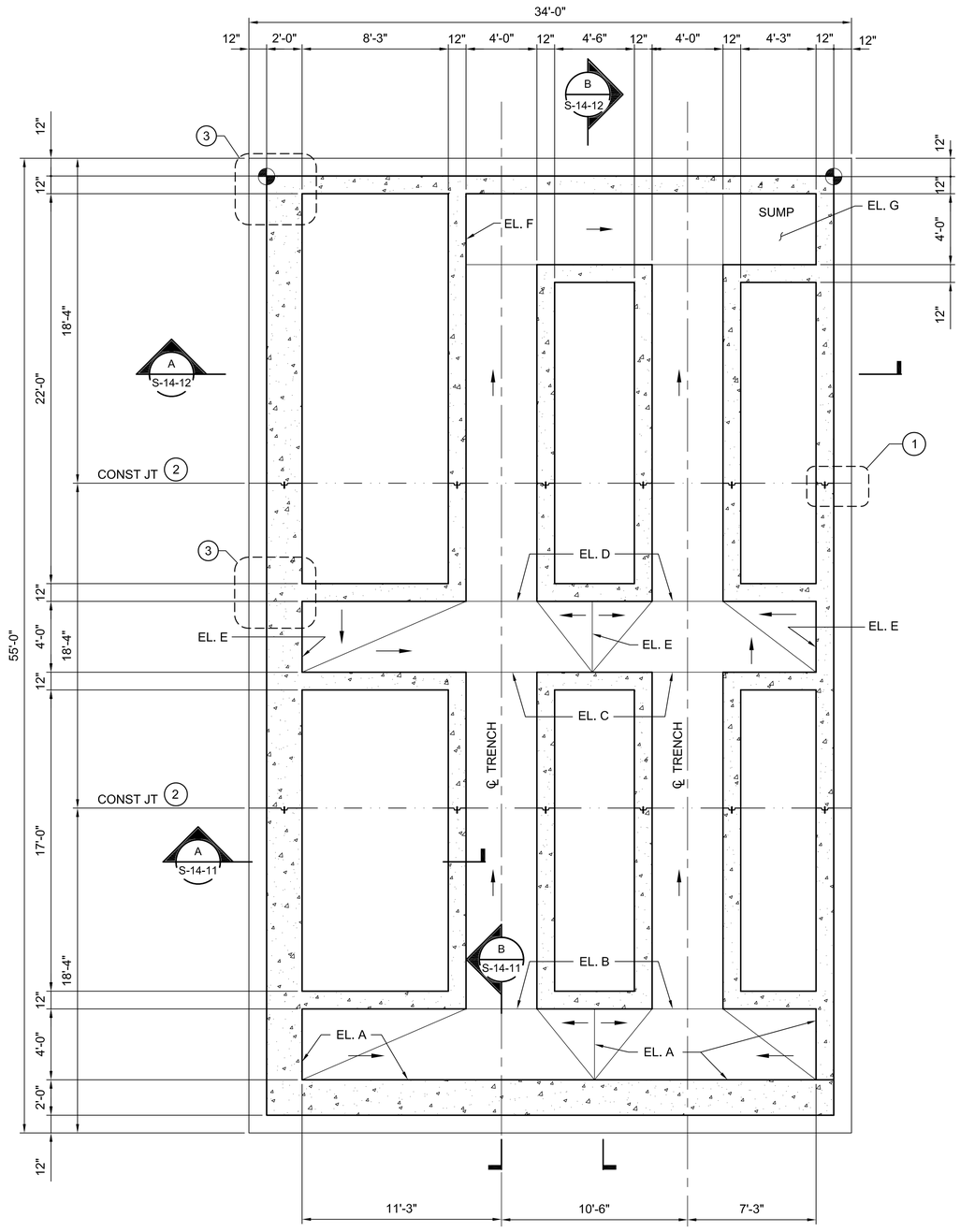

FOUNDATION PLAN

1/4" = 1'-0"

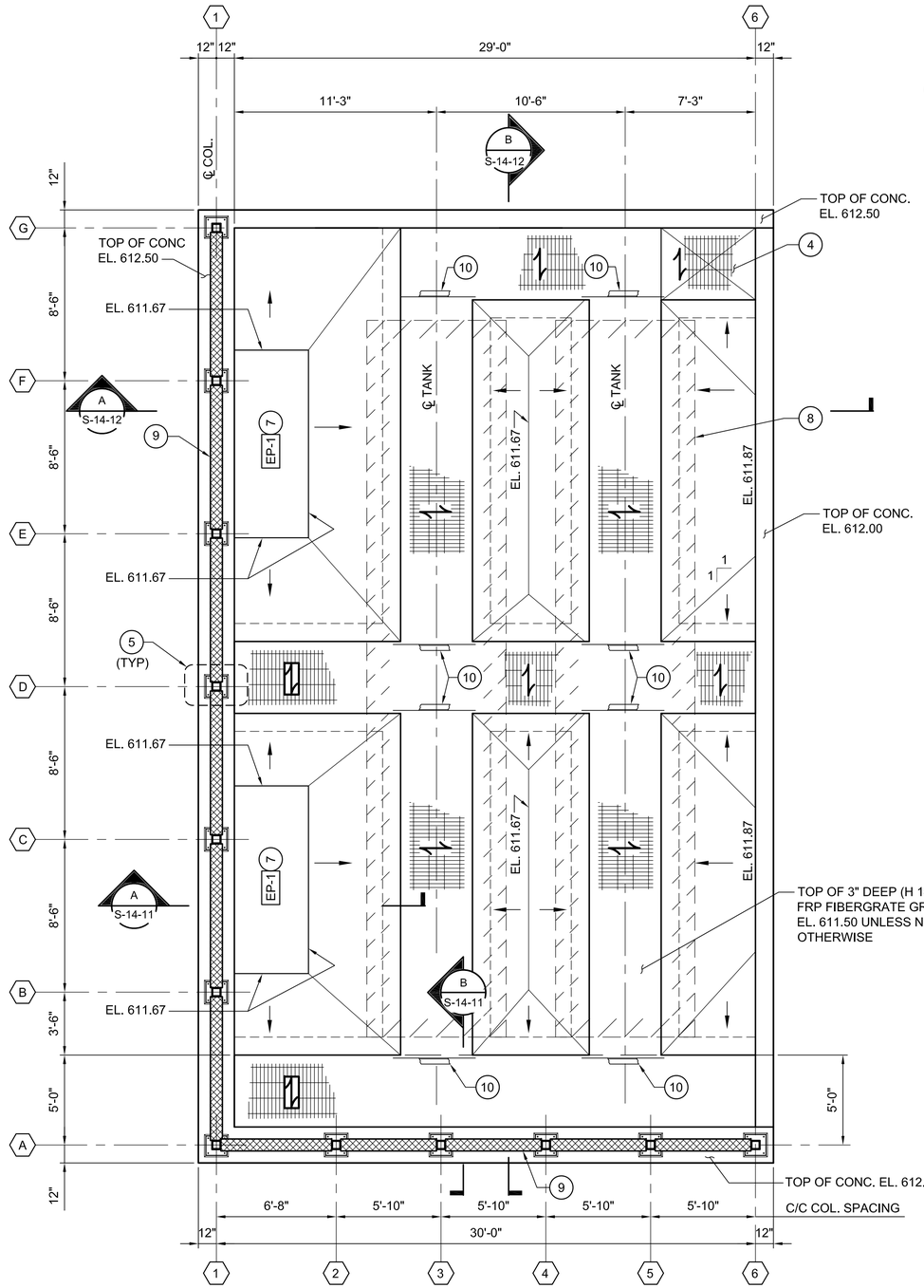

FLOOR PLAN

1/4" = 1'-0"

KEY NOTES:

1. WALL VERTICAL CONSTRUCTION JOINT WITH PREFORMED PLASTIC ADHESIVE WATERSTOP. SEE DETAIL 3 ON S-00-02.
2. FOUNDATION CONSTRUCTION JOINT WITH PREFORMED PLASTIC ADHESIVE WATERSTOP . SEE DETAIL 2 ON S-00-02.
3. DOUBLE REINFORCING WALL DETAIL, SEE DETAIL 5 ON S-00-02.
4. REMOVABLE GRATING OVER SUMP.
5. CANOPY COLUMN BASE PLATE. SEE DETAIL 5 ON S-14-13.
6. NOT USED.
7. EP-1 12" HIGH EQUIPMENT PAD UNLESS NOTED OTHERWISE. SEE DETAIL 9 ON DWG S-00-02. EP PAD SIZE PER MANUFACTURER'S APPROVED SUBMITTALS.
8. INDICATES OUTLINE OF TANK. SEE MECHANICAL DRAWINGS.
9. 8" REINFORCED CONCRETE MASONRY WALL.
10. GRATING SUPPORT, SEE DETAIL 2 ON DWG. S-00-04.

NOTES:

1. FOR GENERAL STRUCTURAL NOTES, SEE S-00-01.
2. FOR COORDINATES, SEE DWG. C-10-05.

DESIGN LOADS

1. WIND LOADS

DESIGN HORIZONTAL WIND LOADS ON VERTICAL SURFACES:

20 PSF (MINIMUM)
BASIC WIND SPEED: 100 MPH
IMPORTANCE FACTOR: 1.25

2. SEISMIC LOADS

CBC, 2013 SITE CLASS: D
SEISMIC DESIGN CATEGORY: D

S_s = 0.230
S_1 = 0.120
S_{MS} = 0.368
S_M = 0.279
S_{DS} = 0.245
S_D = 0.168
IMPORTANCE FACTOR: 1.25

TABLE OF ELEVATIONS	
A	605.50
B	605.42
C	605.25
D	605.17
E	605.21
F	605.00
G	604.83

- FINAL DESIGN -
FOR AGENCY APPROVAL ONLY

REGISTERED PROFESSIONAL ENGINEER
VINOD M. BADANI
C-041281
EXP. DATE 3/31/17
CIVIL
STATE OF CALIFORNIA

E2 Consulting Engineers, Inc.
1900 Powell Street, Ste. 250
Emeryville, CA 94608
(510) 652-1164

ARCADIS

NO.	DATE	DESCRIPTION	GM/SPEC	DWN	CHKD	SUPV	APVD BY
2	11/18/15	FINAL DESIGN		MD	KJ	VMB	RAO
1	9/8/14	PRE-FINAL (90%) DESIGN		MD	KJ	VMB	VMB
0	4/5/13	INTERMEDIATE (60%) DESIGN		MD	KJ	VMB	VMB

REVISIONS

APPROVED BY	
RAO	

SO	
SUPV	VMB
DSGN	KDD
DWN	MD
CHKD	KJ
OK	VMB
DATE	6/30/14
SCALES	1/4"=1'-0"

TOPOCK GROUNDWATER REMEDIATION PROJECT
CONDITIONED WATER STORAGE TANK FARM
FOUNDATION AND FLOOR PLANS
GAS TRANSMISSION & DISTRIBUTION
PACIFIC GAS AND ELECTRIC COMPANY
SAN FRANCISCO, CALIFORNIA

MICROFILM	
BILL OF MATL	
DWG LIST	
SUPSDS	
SUPSD BY	
SHEET NO.	of SHEETS
S-14-10	REV 1

E2-S-XXX-1408AD.dwg

N180B

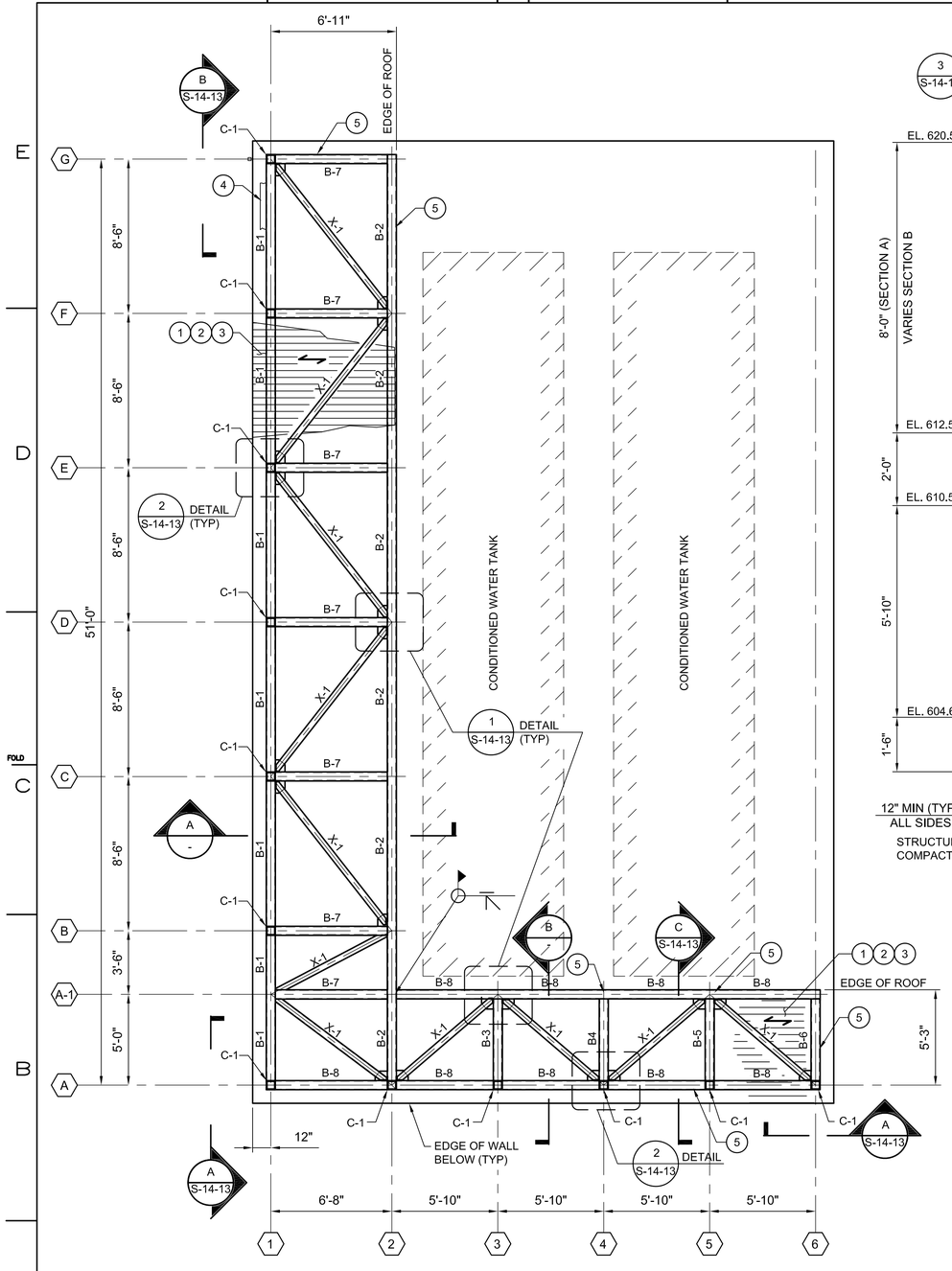

CANOPY - ROOF PLAN
1/4" = 1'-0"

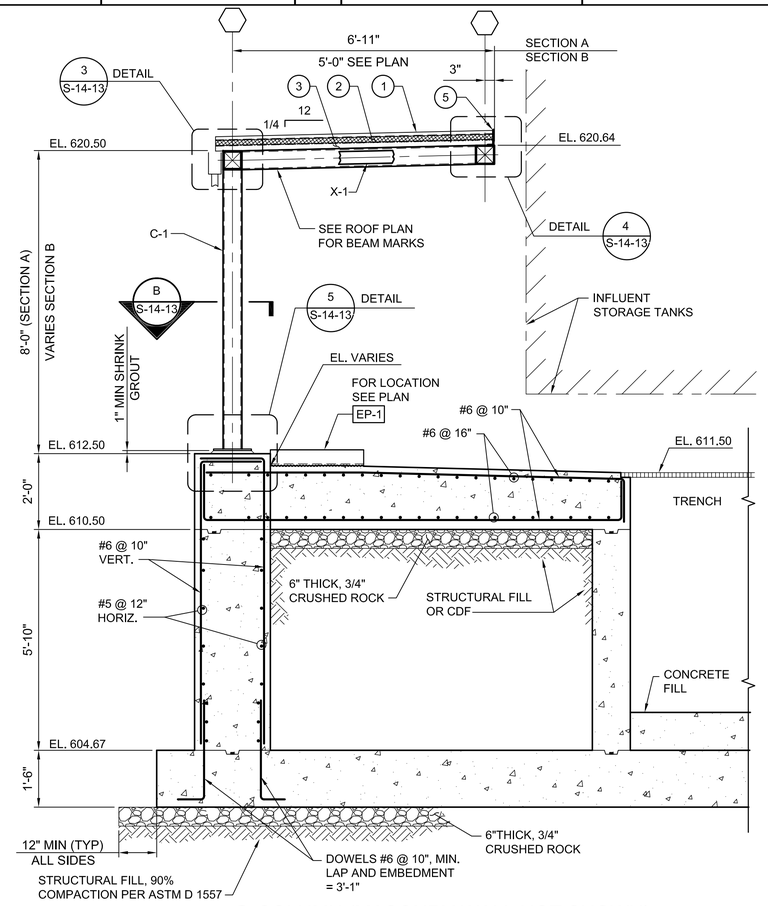

@ COLUMN (MASONRY WALL NOT SHOWN)

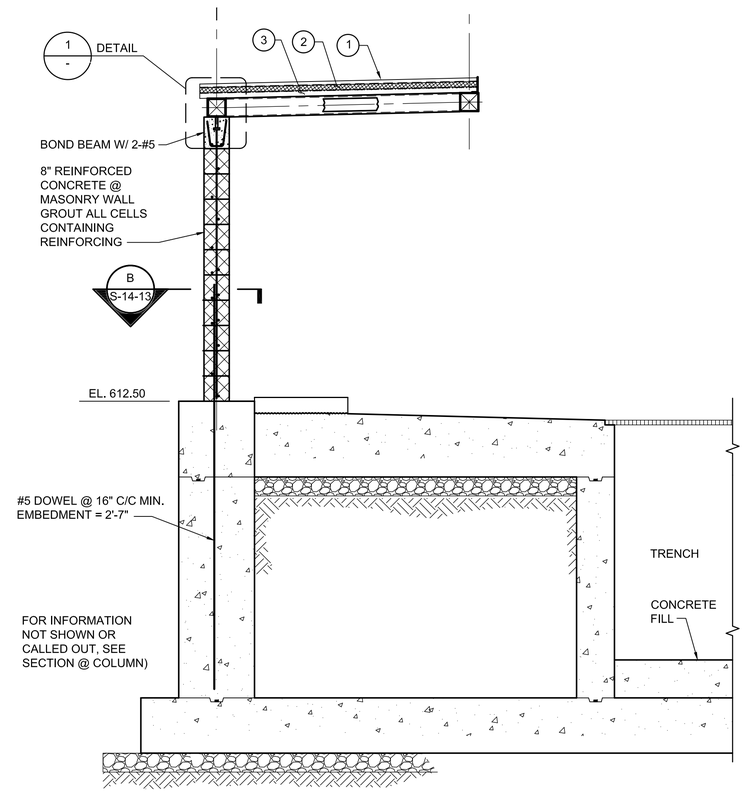

@ MASONRY WALL (COLUMN NOT SHOWN)

A - SECTION OR B - SECTION
1/2" = 1'-0"
S-14-10 S-14-10

STEEL BEAM SCHEDULE				
MARK	SIZE	WALL "T"	ELEV. TOP OF BEAM COLUMN	REMARK
B-1	HSS 6x6	3/8	620.50	
B-2	HSS 6x6	3/8	620.64	
B-3	HSS 6x6	3/8	620.76	
B-4	HSS 6x6	3/8	620.88	
B-5	HSS 6x6	3/8	621.00	
B-6	HSS 6x6	3/8	621.13	
B-7	HSS 6x6	3/8	VARIES	
B-8	HSS 6x6	3/8	VARIES	
X-1	HSS 4x4	1/4	VARIES	X-BRACING
C-1	HSS 6x6	3/8	-	COLUMNS

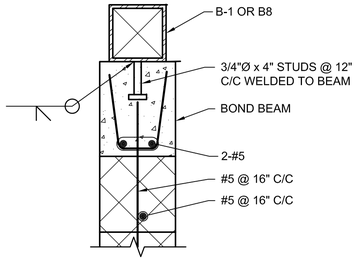

1 DETAIL
1 1/2" = 1'-0"
-

- FINAL DESIGN - FOR AGENCY APPROVAL ONLY

KEY NOTES:

1. 1 1/2" STANDING SEAM METAL ROOF PANEL.
2. 2" RIGID INSULATION
3. METAL ROOF DECK:
   1 1/2" HIGH X 36" WIDE PANEL
   (6 RIBS @ 6" C/C PER PANEL) GALVANIZED,
   MINIMUM PROPERTIES/LF OF WIDTH:
   I = 0.29 IN /LF
   +S = 0.315 IN /LF
   -S = 0.316 IN /LF
   CONNECTION:
   1. USE #2 GALVANIZED SCREWS OR 1/2"Ø PUDDLE WELDS AT 6" C/C (6 PER SHEET MIN, FOR 36" WIDE PANELS) TO ATTACH ROOF DECK TO SUPPORTING MEMBERS.
   2. USE # 2 GALVANIZED SCREWS @ 12" C/C FOR SIDE CONNECTIONS.
4. GUTTER AND DOWNSPOUT. SEE ARCHITECTURAL DRAWINGS FOR DETAILS.
5. CLOSURE ANGLE.

NOTES:

1. FOR ADDITIONAL DETAILS, SEE ARCHITECTURAL DWGS.

REGISTERED PROFESSIONAL ENGINEER VINOD M. BADANI C-041281 EXP. DATE 3/31/17 CIVIL STATE OF CALIFORNIA

E2 Consulting Engineers, Inc.
1900 Powell Street, Ste. 250
Emeryville, CA 94608
(510) 652-1164

ARCADIS

NO.	DATE	DESCRIPTION	GM/SPEC	DWN	CHKD	SUPV	APVD BY
2	11/18/15	FINAL DESIGN		MD	KJ	VMB	RAO
1	9/8/14	PRE-FINAL (90%) DESIGN		MD	KJ	VMB	VMB
0	4/5/13	INTERMEDIATE (60%) DESIGN		MD	KJ	VMB	VMB

REVISIONS

APPROVED BY	
RAO	SO
	SUPV
	DSGN
	DWN
	CHKD
	OK
	DATE
	SCALES

AS NOTED

TOPOCK GROUNDWATER REMEDIATION PROJECT
CONDITIONED WATER STORAGE TANK FARM
CANOPY PLAN AND SECTIONS
GAS TRANSMISSION & DISTRIBUTION
PACIFIC GAS AND ELECTRIC COMPANY
SAN FRANCISCO, CALIFORNIA

MICROFILM	
BILL OF MATL	
DWG LIST	
SUPSDS	
SUPSD BY	
SHEET NO.	of SHEETS
S-14-11	REV 1

E2-S-XXX-1408AD.dwg

N1808

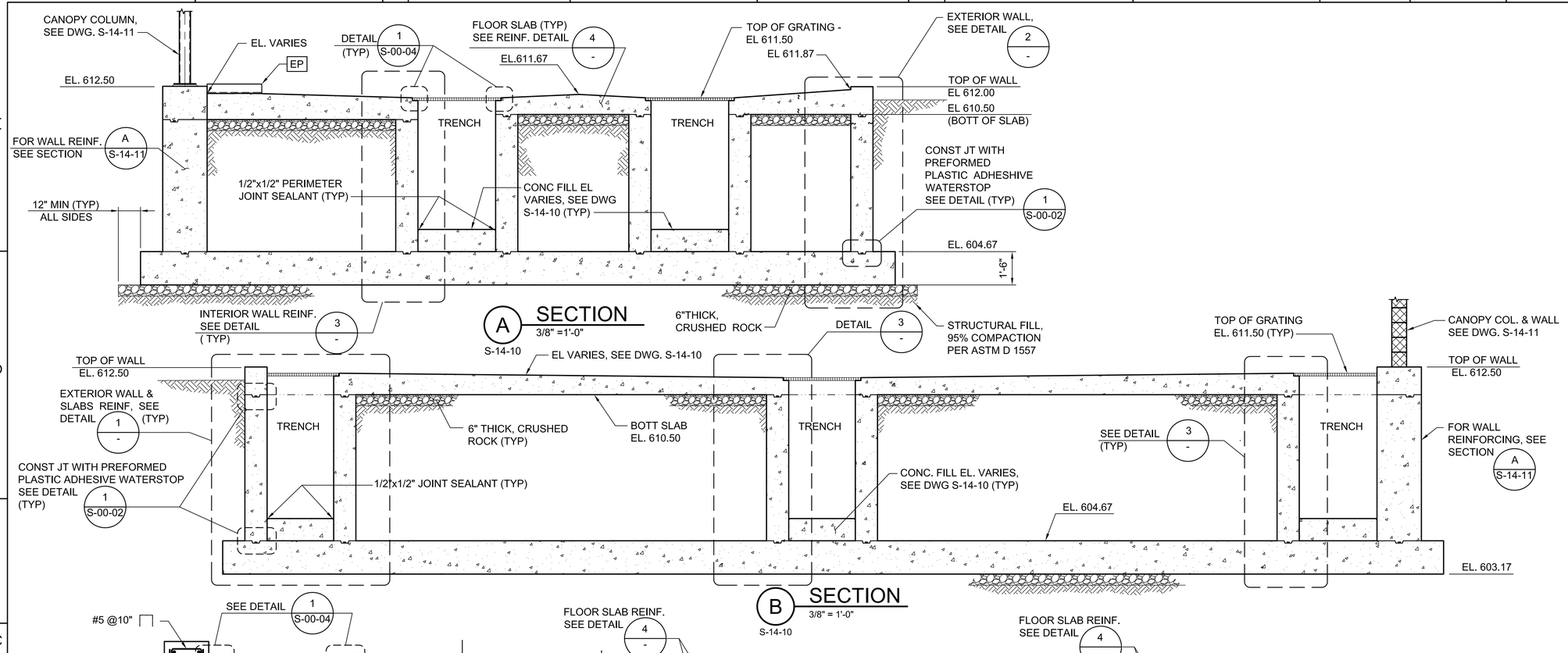

- FINAL DESIGN - FOR AGENCY APPROVAL ONLY

REGISTERED PROFESSIONAL ENGINEER VINOD M. BADANI C-041281 EXP. DATE 3/31/17 CIVIL STATE OF CALIFORNIA

E2 Consulting Engineers, Inc.
1900 Powell Street, Ste. 250
Emeryville, CA 94608
(510) 652-1164

ARCADIS

NO.	DATE	DESCRIPTION	GM/SPEC	DWN	CHKD	SUPV	APVD BY
2	11/18/15	FINAL DESIGN		MD	KJ	VMB	RAO
1	9/8/14	PRE-FINAL (90%) DESIGN		MD	KJ	VMB	VMB
0	4/5/13	INTERMEDIATE (60%) DESIGN		MD	KJ	VMB	VMB

REVISIONS

APPROVED BY	SO
RAO	SUPV
	DSGN
	DWN
	CHKD
	OK
	DATE
	SCALES AS NOTED

TOPOCK GROUNDWATER REMEDIATION PROJECT
CONDITIONED WATER STORAGE TANK FARM
SECTIONS AND DETAILS
GAS TRANSMISSION & DISTRIBUTION
PACIFIC GAS AND ELECTRIC COMPANY
SAN FRANCISCO, CALIFORNIA

MICROFILM	
BILL OF MATL	
DWG LIST	
SUPSDS	
SUPSD BY	
SHEET NO.	of SHEETS
S-14-12	REV 1

E2-S-XXX-1410AD.dwg

N1808

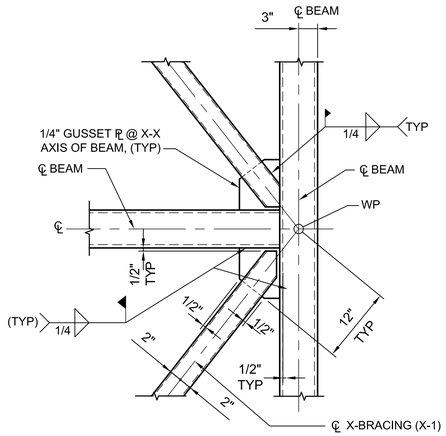

1 DETAIL
1" = 1'-0"
S-14-11

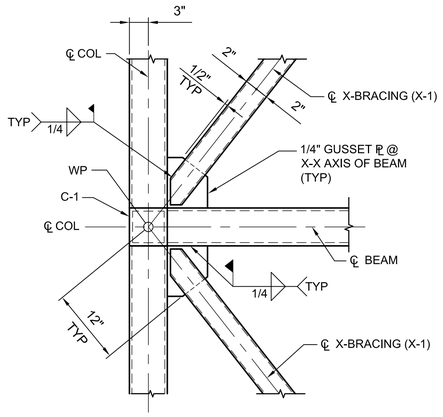

2 DETAIL
1" = 1'-0"
S-14-11

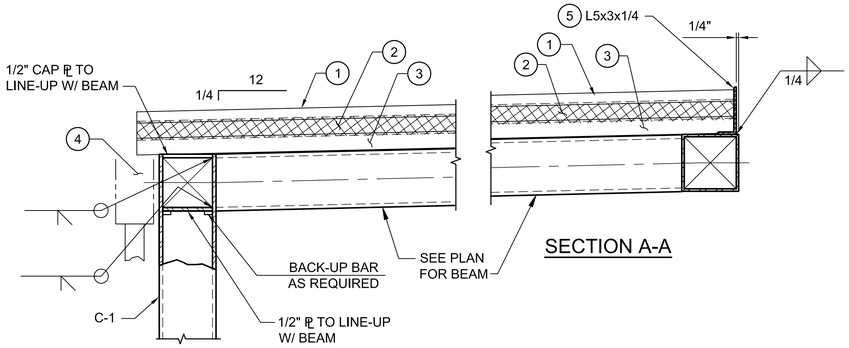

SECTION B-B

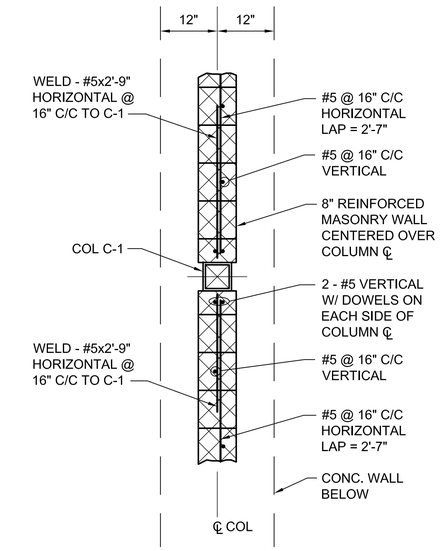

B SECTION
3/4" = 1'-0"
S-14-11

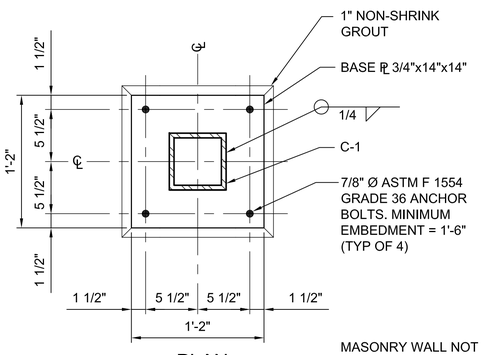

PLAN

MASONRY WALL NOT SHOWN FOR CLARITY

5 DETAIL
1 1/2" = 1'-0"
S-14-10, S-14-11

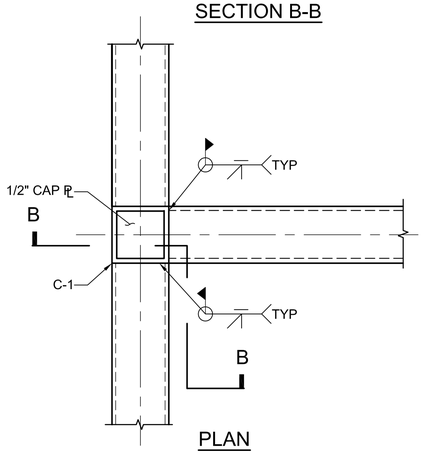

PLAN

3 DETAIL
1 1/2" = 1'-0"
S-14-11

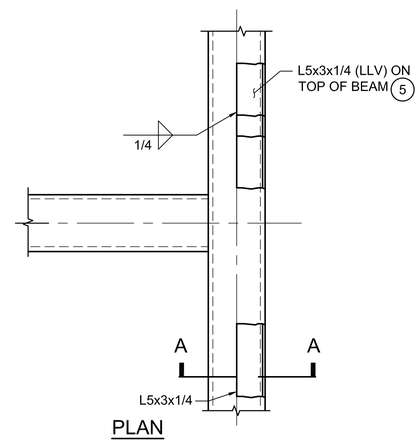

PLAN

4 DETAIL
1 1/2" = 1'-0"
S-14-11

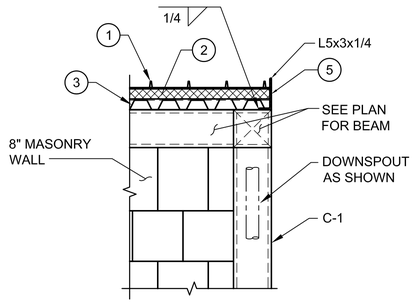

A SECTION
1" = 1'-0"
S-14-11

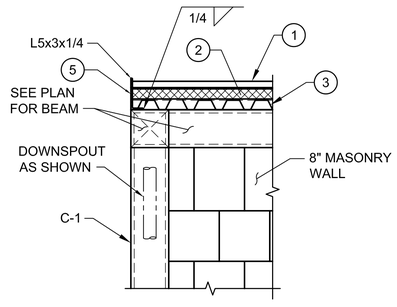

B SECTION
1" = 1'-0"
S-14-11

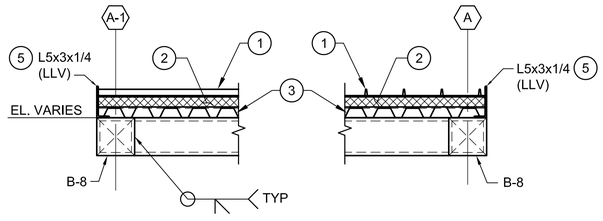

C SECTION
1" = 1'-0"
S-14-11

KEY NOTES

1. 1 1/2" STANDING SEAM METAL ROOF, SEE ARCHITECTURAL DRAWINGS.
2. 2" RIGID INSULATION.
3. ROF DECK: 1 1/2" DEEPX 36" WIDE PANEL (6 RIBS @ 6" C/C PER PANEL) GALVANIZED, (18 GAUGE)
   MINIMUM PROPERTIES/LF OF WIDTH:
   I = 0.29 IN /LF
   +S = 0.315 IN /LF
   -S = 0.316 IN /LF

   CONNECTION:
   1. USE #2 GALVANIZED SCREWS OR 1/2"Ø PUDDLE WELDS AT 6" C/C (6 PER SHEET MIN. FOR 36" WIDE PANELS) TO ATTACH ROOF DECK TO SUPPORTING MEMBERS.
   2. USE # 2 GALVANIZED SCREWS @ 12" C/C FOR SIDE CONNECTIONS.
4. FOR GUTTER AND DOWNSPOUT, SEE ARCHITECTUTAL DRAWINGS.
5. CLOSURE ANGLE THREE SIDES.

- FINAL DESIGN - FOR AGENCY APPROVAL ONLY

REGISTERED PROFESSIONAL ENGINEER VINOD M. BADANI C-041281 EXP. DATE 3/31/17 CIVIL STATE OF CALIFORNIA

E2 Consulting Engineers, Inc.
1900 Powell Street, Ste. 250
Emeryville, CA 94608
(510) 652-1164

ARCADIS

NO.	DATE	DESCRIPTION	GM/SPEC	DWN	CHKD	SUPV	APVD BY
1	11/18/15	FINAL DESIGN	MD	KJ	VMB	RAO	
0	09/08/14	PRE-FINAL (90%) DESIGN	MD	KJ	VMB		

REVISIONS

APPROVED BY: RAO
SO
SUPV
DSGN
DWN
CHKD
OK
DATE
SCALES: AS NOTED

TOPOCK GROUNDWATER REMEDIATION PROJECT
CONDITIONED WATER STORAGE TANK FARM
SECTIONS AND DETAILS
GAS TRANSMISSION & DISTRIBUTION
PACIFIC GAS AND ELECTRIC COMPANY
SAN FRANCISCO, CALIFORNIA

MICROFILM
BILL OF MATL
DWG LIST
SUPSDS
SUPSD BY
SHEET NO. S-14-13 of SHEETS
REV 0

E2-S-XXX-1408AD.dwg

N1808

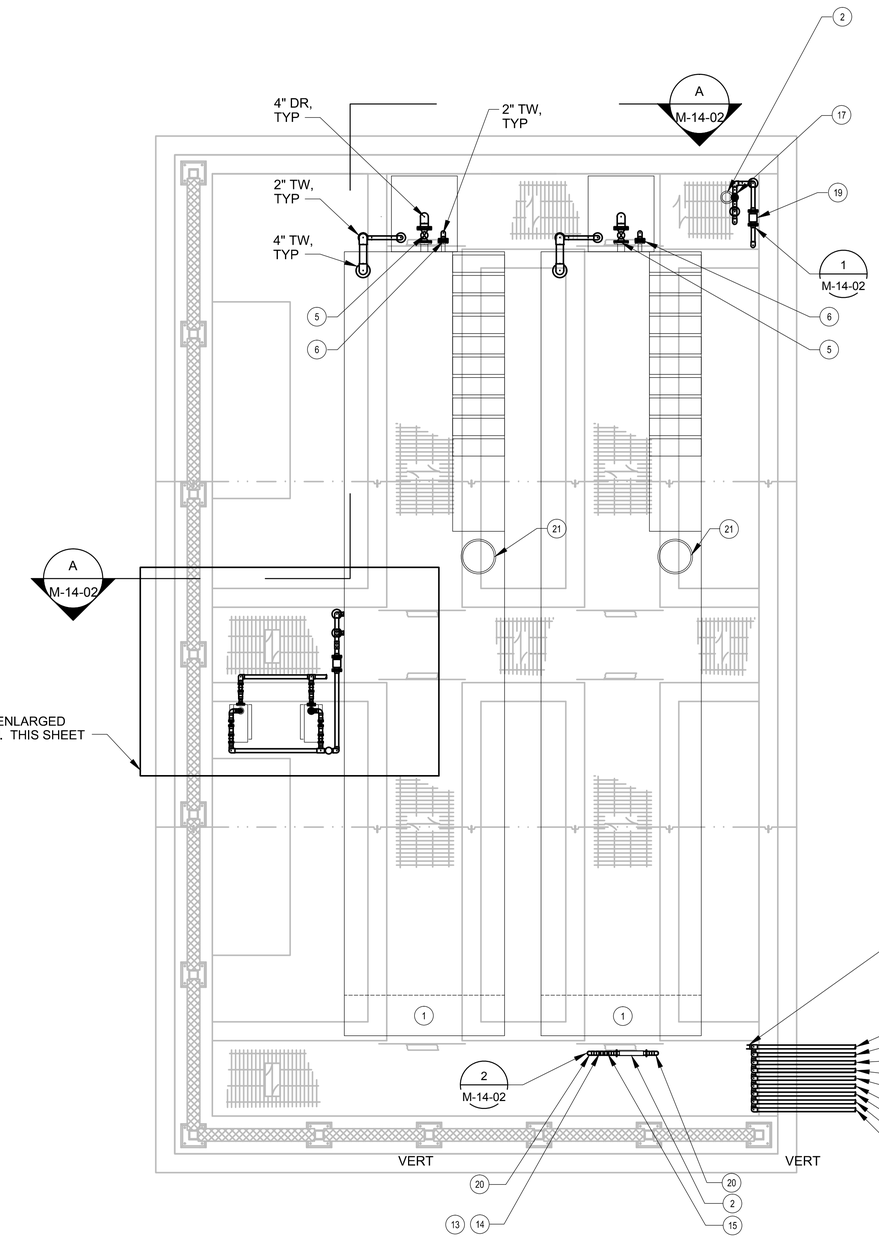

PLAN
1/4"=1'-0"

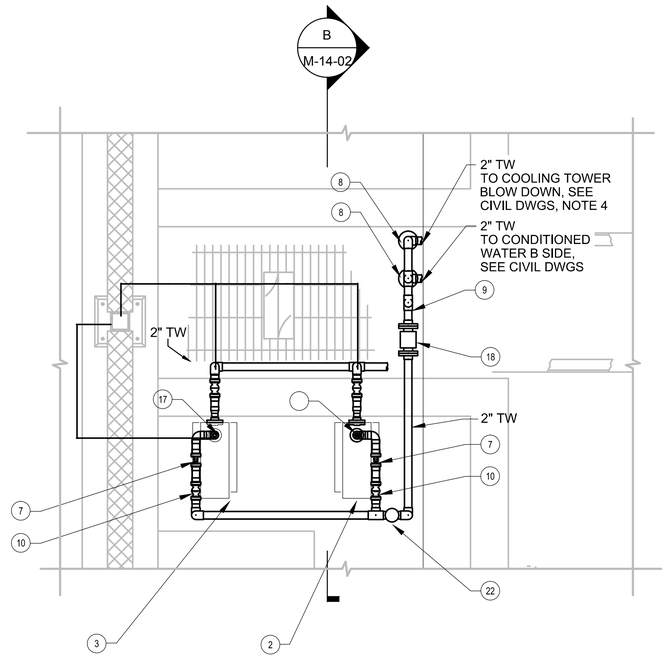

ENLARGED PLAN
1/2"=1'-0"

LEGEND:

(1) REFERENCE ITEM NUMBER E□UIPMENT SCHEDULE ON SHEET M-14-08.

NOTES:
1. PIPE SUPPORTS NOT SHOWN. CONTRACTOR TO SUPPORT PIPES IN ACCORDANCE WITH SPEC. 40 05 15.
2. COMPRESSED AIR PIPING AND FITTINGS SHALL BE VIEGA PROPRESS COPPER PIPE OR APPROVED E□UAL. WALL THICKNESS SHALL BE SUITABLE FOR COMPRESSED AIR AT 110 PSIG AND 130 F AMBIENT □TYPE K OR BETTER□
3. M□R-408 IS 2" KOFLOW SERIES 308 6-ELEMENT.
4. COOLING TOWER BLOWDOWN LINE CONNECTS TO TCS WASTEWATER TANK AND IS PUMPED FROM THERE TO EVAPORATION PONDS.
5. FOR PIPE ID AND ABBREVIATION SCHEDULE, SEE C-00-12.

- FINAL DESIGN - FOR AGENCY APPROVAL ONLY

REGISTERED PROFESSIONAL ENGINEER BENJAMIN J. WUERL C 67811 Exp 6/30/17 STATE OF CALIFORNIA

0 1 2 3
SCALE: 1/4"=1'

ETIC ENGINEERING

ARCADIS

NO.	DATE	DESCRIPTION	GM/SPEC	DWN	CHKD	SUPV	APVD BY
2	11/18/15	FINAL DESIGN		AJW	KLD	BW	RAO
1	09/2014	PRE-FINAL 90% DESIGN		DS	JP	RH	CH
0	09/2012	INTERMEDIATE 60% DESIGN		GJ	WF	JP	CH

REVISIONS

APPROVED BY	
RAO	SO
	SUPV
	DSGN
	DWN
	CHKD
	OK
	DATE
	SCALES

TOPOCK GROUNDWATER REMEDIATION PROJECT

CONDITIONED WATER STORAGE TANK FARM PLAN

GAS TRANSMISSION & DISTRIBUTION
PACIFIC GAS AND ELECTRIC COMPANY
SAN FRANCISCO, CALIFORNIA

MICROFILM	
BILL OF MATL	
DWG LIST	
SUPSDS	
SUPSD BY	
SHEET NO.	of SHEETS
M-14-01	REV 2

N1808

11/02/2015, 11:56, G:\Graphics\ART\TOPOCK-01\Submittal_100%\DWGs\M-Mechanical\M-14-01.dwg, Tab: M-14-01

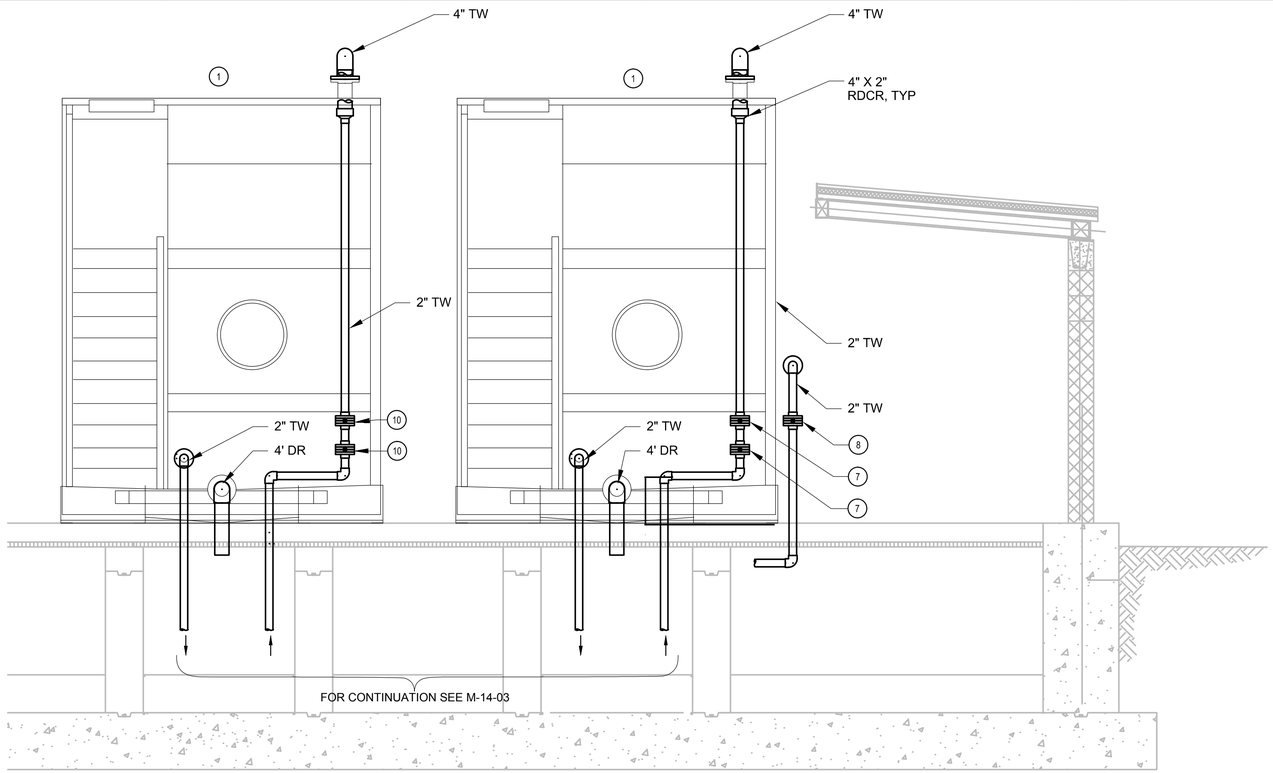

A SECTION
1/2" = 1'-0"
M-14-01

LEGEND:

(1) REFERENCE ITEM NUMBER E□UIPMENT SCHEDULE ON SHEET M-14-08.

NOTES:
1. PIPE SUPPORTS NOT SHOWN. CONTRACTOR TO SUPPORT PIPES IN ACCORDANCE WITH SPEC. 40 05 15.
2. COMPRESSED AIR PIPING AND FITTINGS SHALL BE VIEGA PROPRESS COPPER PIPE OR APPROVED E□UAL. WALL THICKNESS SHALL BE SUITABLE FOR COMPRESSED AIR AT 110 PSIG AND 130 F AMBIENT □TYPE K OR BETTER□
3. COOLING TOWER BLOWDOWN LINE CONNECTS TO TCS WASTEWATER TANK AND IS PUMPED FROM THERE TO EVAPORATION PONDS.
4. FOR PIPE I.D. AND ABBREVIATION SCHEDULE, SEE C-00-12.

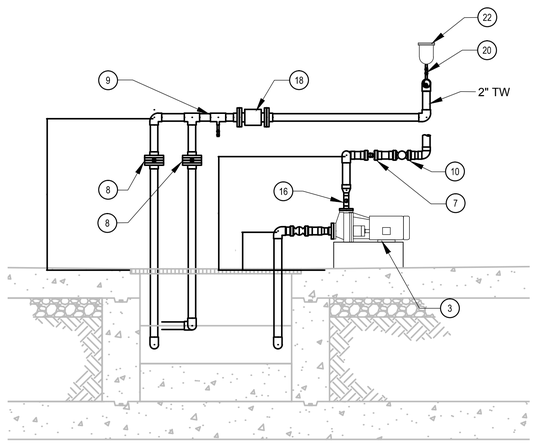

B SECTION
1/2" = 1'-0"
M-14-01

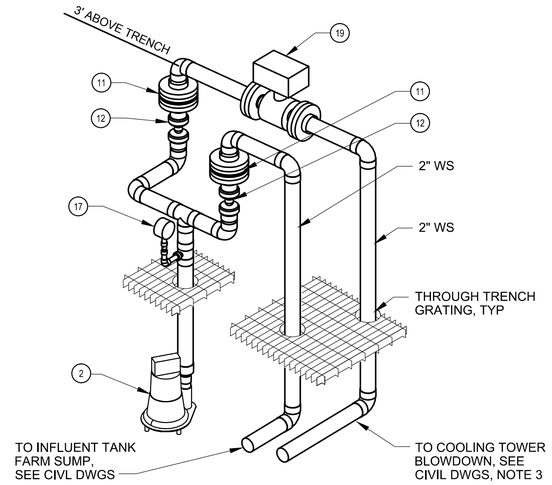

1 DETAIL
NTS
M-14-01

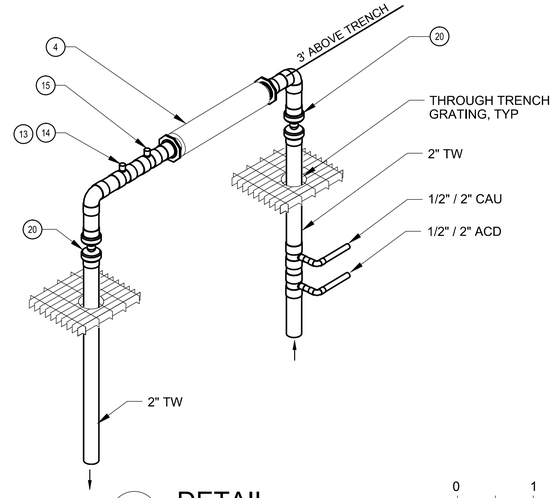

2 DETAIL
NTS
M-14-01

0 1 2 3
SCALE: 1/4"=1'

- FINAL DESIGN - FOR AGENCY APPROVAL ONLY

REGISTERED PROFESSIONAL ENGINEER BENJAMIN J. WUERL C 67811 Exp 6/30/14 STATE OF CALIFORNIA

ETIC ENGINEERING

ARCADIS

NO.	DATE	DESCRIPTION	GM/SPEC	DWN	CHKD	SUPV	APVD	BY
1	11/18/15	FINAL DESIGN	AJW	KLD	BW	RAO		
0	09/2014	PRE-FINAL 90%: DESIGN	DS	WF	JP	CH		

REVISIONS

APPROVED BY: RAO

SO
SUPV
DSGN
DWN
CHKD
OK
DATE
SCALES

TOPOCK GROUNDWATER REMEDIATION PROJECT

CONDITIONED WATER STORAGE TANK FARM SECTIONS

GAS TRANSMISSION & DISTRIBUTION
PACIFIC GAS AND ELECTRIC COMPANY
SAN FRANCISCO, CALIFORNIA

MICROFILM
BILL OF MATL
DWG LIST
SUPSDS
SUPSD BY
SHEET NO. M-14-02 of SHEETS
REV 1

N1808

11/02/2015, 11:57, G:\Graphics\AR\TOPOCK-01\Submittal_100%\DWGs\M-Mechanical\M-14-02.dwg, Tab: M-14-02

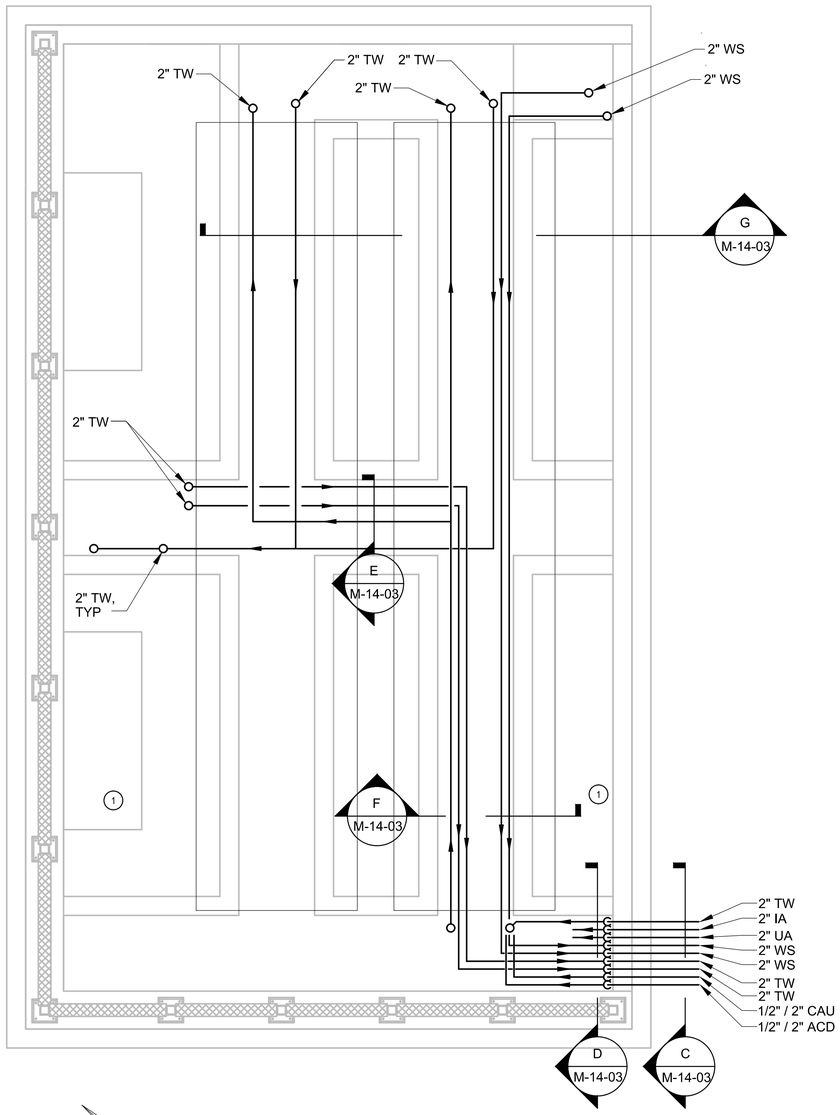

TRENCH PIPING SCHEMATIC
1/4"=1'-0"

LEGEND:

(1) REFERENCE ITEM NUMBER E□UIPMENT SCHEDULE ON SHEET M-14-08.

NOTES:
1. FOR PIPE ID AND ABBREVIATION SCHEDULE, SEE C-00-12.

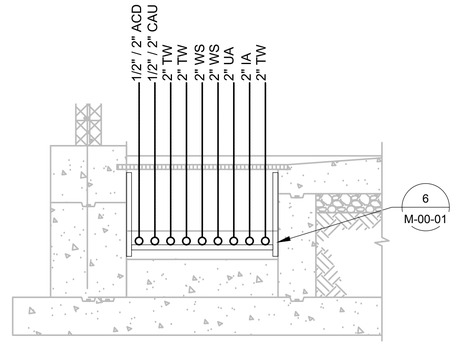

C SECTION
1/2" = 1'-0"
M-14-03

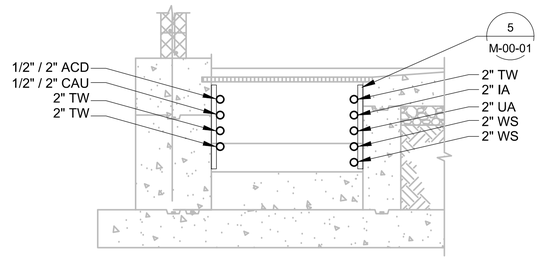

D SECTION
1/2" = 1'-0"
M-14-03

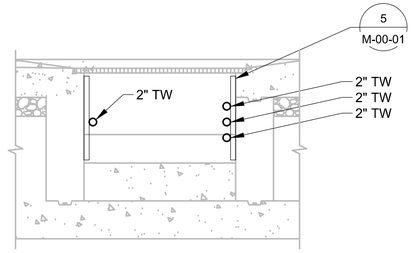

E SECTION
1/2" = 1'-0"
M-14-03

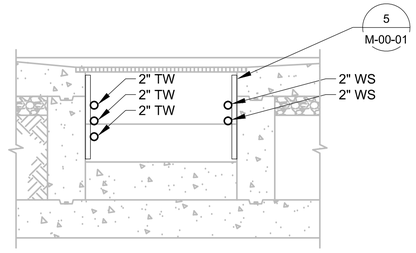

F SECTION
1/2" = 1'-0"
M-14-03

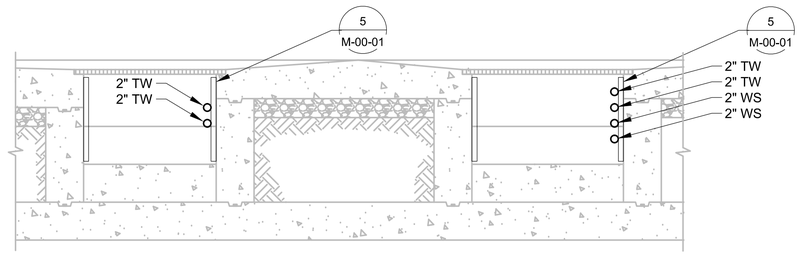

G SECTION
1/2" = 1'-0"
M-14-03

0 1 2 3
SCALE: 1/4"=1'

- FINAL DESIGN - FOR AGENCY APPROVAL ONLY

REGISTERED PROFESSIONAL ENGINEER BENJAMIN J. WUERL C 67811 Exp 6/30/17 STATE OF CALIFORNIA

ETIC ENGINEERING

ARCADIS

NO.	DATE	DESCRIPTION	GM/SPEC	DWN	CHKD	SUPV	APVD BY
1	11/18/15	FINAL DESIGN	AJW	KLD	BW	RAO	
0	09/2014	PRE-FINAL 90% DESIGN	DS	WF	JP	CH	

REVISIONS

APPROVED BY	
RAO	SO
	SUPV
	DSGN
	DWN
	CHKD
	OK
	DATE
	SCALES

TOPOCK GROUNDWATER REMEDIATION PROJECT
CONDITIONED WATER STORAGE TANK FARM SECTIONS AND DETAILS
GAS TRANSMISSION & DISTRIBUTION
PACIFIC GAS AND ELECTRIC COMPANY
SAN FRANCISCO, CALIFORNIA

MICROFILM	
BILL OF MATL	
DWG LIST	
SUPSDS	
SUPSD BY	
SHEET NO.	of SHEETS
M-14-03	REV 1

N1808

11/02/2015, 11:59, G:\Graphics\AR\TOPOCK-01\Submittal_100%\DWGs\M-Mechanical\M-14-03.dwg, Tab: M-14-03

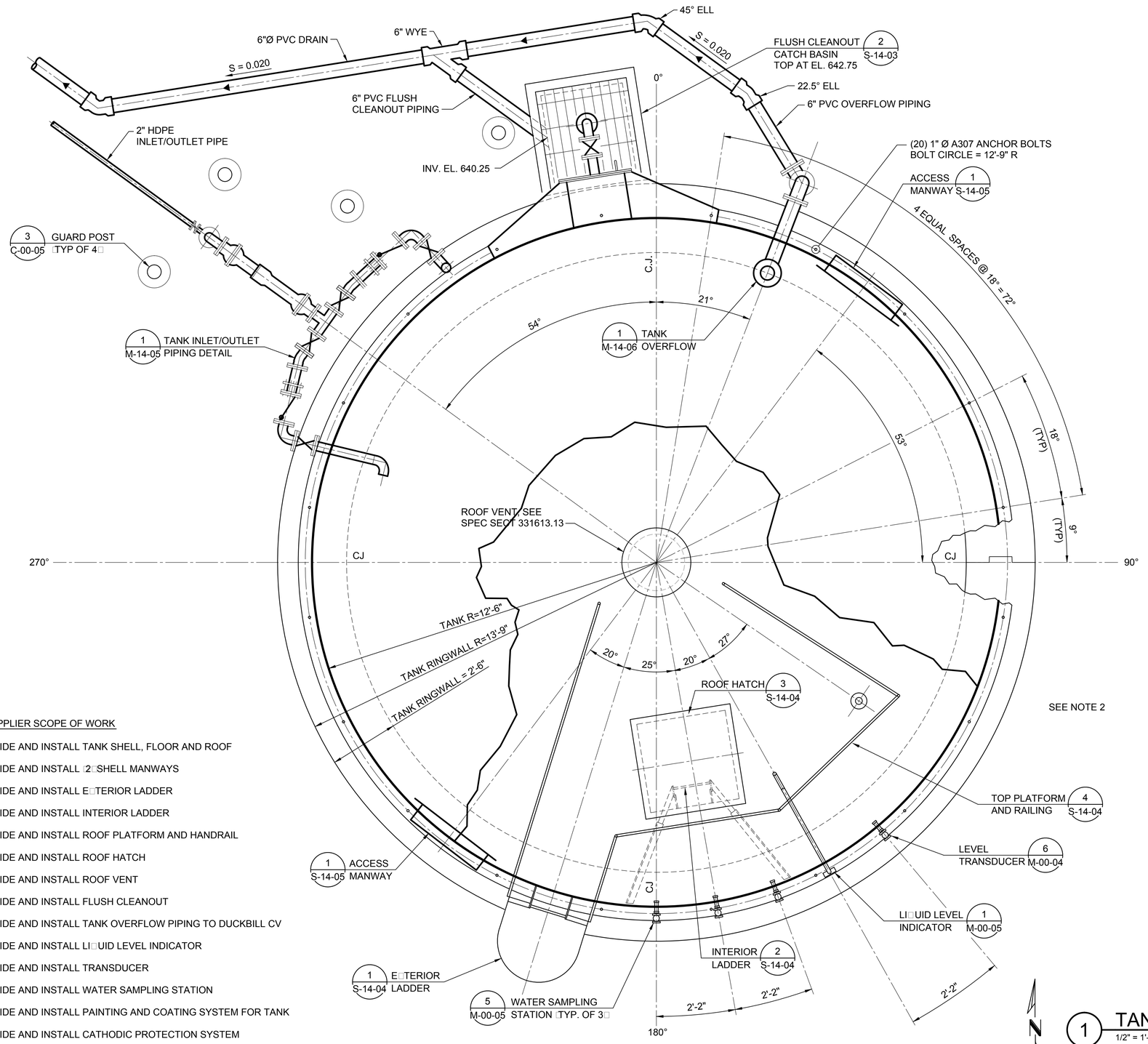

TANK SUPPLIER SCOPE OF WORK

1. PROVIDE AND INSTALL TANK SHELL, FLOOR AND ROOF
2. PROVIDE AND INSTALL 2 SHELL MANWAYS
3. PROVIDE AND INSTALL EXTERIOR LADDER
4. PROVIDE AND INSTALL INTERIOR LADDER
5. PROVIDE AND INSTALL ROOF PLATFORM AND HANDRAIL
6. PROVIDE AND INSTALL ROOF HATCH
7. PROVIDE AND INSTALL ROOF VENT
8. PROVIDE AND INSTALL FLUSH CLEANOUT
9. PROVIDE AND INSTALL TANK OVERFLOW PIPING TO DUCKBILL CV
10. PROVIDE AND INSTALL LIQUID LEVEL INDICATOR
11. PROVIDE AND INSTALL TRANSDUCER
12. PROVIDE AND INSTALL WATER SAMPLING STATION
13. PROVIDE AND INSTALL PAINTING AND COATING SYSTEM FOR TANK
14. PROVIDE AND INSTALL CATHODIC PROTECTION SYSTEM

NOTES:

1. NOMINAL SPACING MEASURED ALONG OUTSIDE FACE OF TANK WALL.
2. FOR TANK ACCESS ROAD AND RETAINING WALL SEE DWG. C-10-06 AND DWG. S-14-08.

1 TANK AND EQUIPMENT PLAN

1/2" = 1'-0"

C-10-06

- FINAL DESIGN - FOR AGENCY APPROVAL ONLY

REGISTERED PROFESSIONAL ENGINEER
BENJAMIN J. WUERL
C 67811
EXP 6/30/17
CIVIL
STATE OF CALIFORNIA

ETIC ENGINEERING

ARCADIS

NO.	DATE	DESCRIPTION	GM/SPEC	DWN	CHKD	SUPV	APVD BY
0	11/18/15	FINAL DESIGN		AJW	KLD	BW	RAO

REVISIONS

APPROVED BY	
	SO
RAO	SUPV
	DSGN
	DWN
	CHKD
	OK
	DATE
	SCALES

TOPOCK GROUNDWATER REMEDIATION PROJECT

CONDITIONED WATER STORAGE TANK MECHANICAL PLAN

GAS TRANSMISSION & DISTRIBUTION

PACIFIC GAS AND ELECTRIC COMPANY
SAN FRANCISCO, CALIFORNIA

MICROFILM	
BILL OF MATL	
DWG LIST	
SUPSDS	
SUPSD BY	
SHEET NO.	of SHEETS
M-14-04	REV 0

N1808

11/02/2015, 13:15, G:\Graphics\AR\TOPOCK-01\Submittal_100%\DWGs\M-Mechanical\M-14-04.dwg, Tab: M-14-04

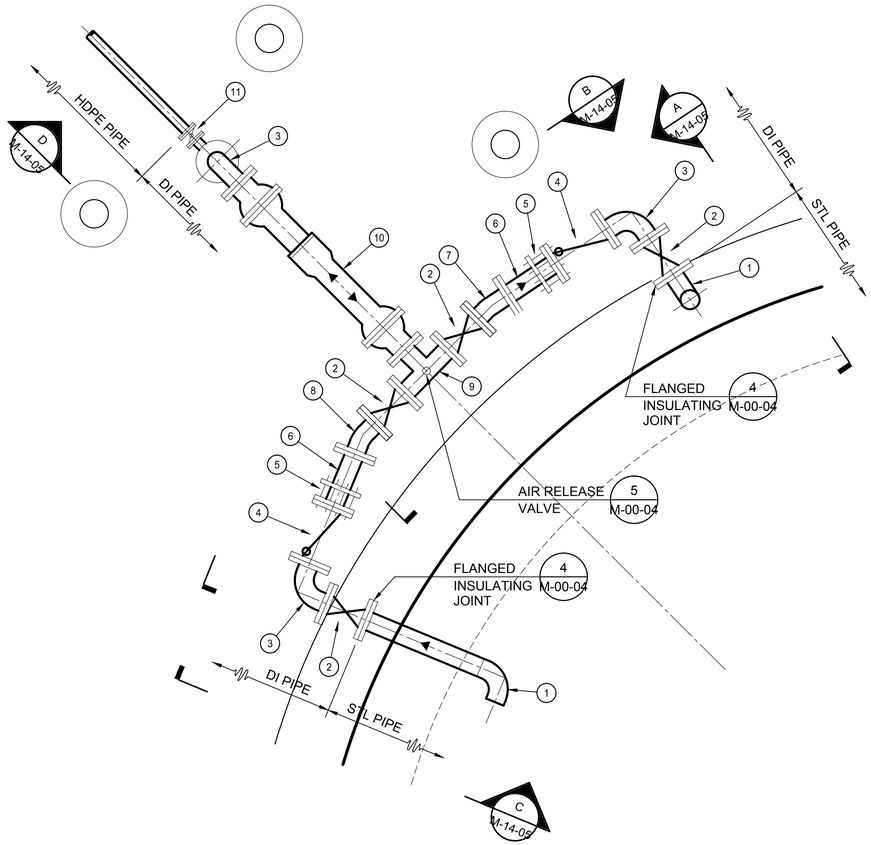

TANK INLET/OUTLET PIPING

1 DETAIL

3/4" = 1'-0"

S-14-01

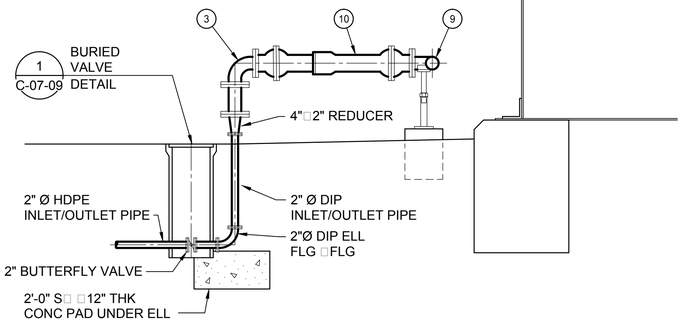

D SECTION

1/2" = 1'-0"

M-14-05

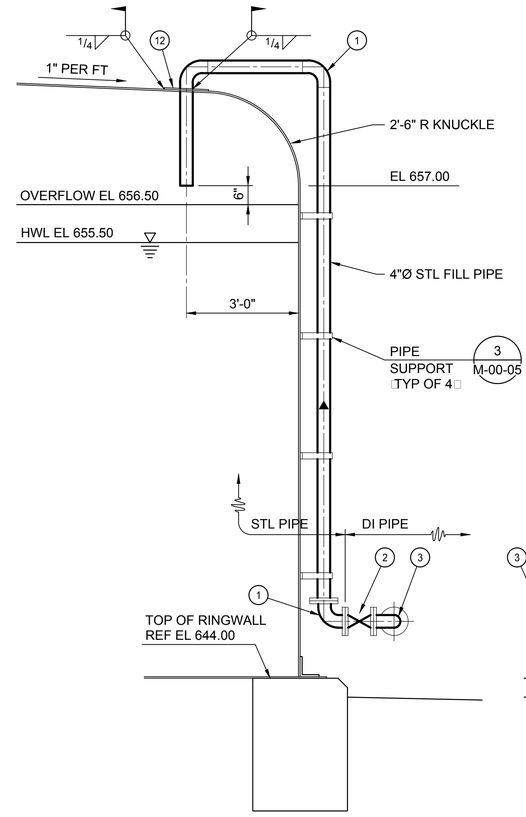

A SECTION

1/2" = 1'-0"

M-14-05

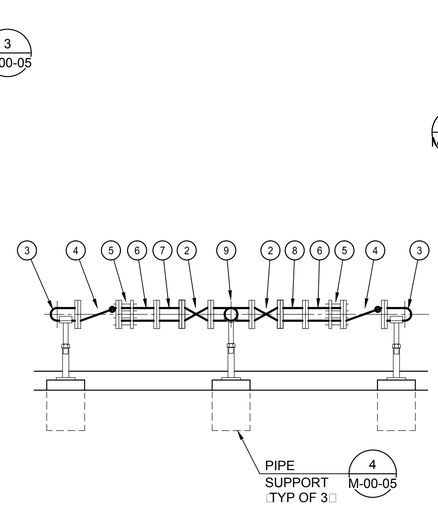

B SECTION

1/2" = 1'-0"

M-14-05

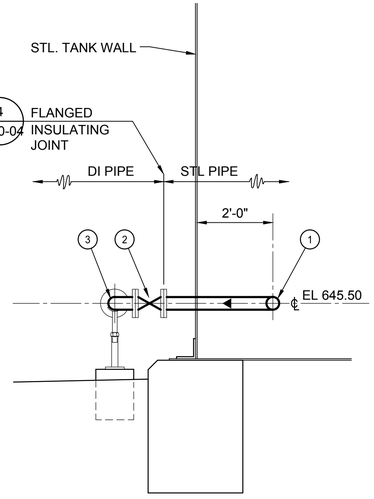

C SECTION

1/2" = 1'-0"

M-14-05

LEGEND

(1) REFERENCE ITEM NUMBER IN SCHEDULE

SCHEDULE

ITEM	DESCRIPTION
1	4"Ø STL 90° LR ELL
2	4" RESILIENT WEDGE GATE VALVE, FLG □FLG
3	4"Ø DIP 90° ELL, FLG x FLG
4	4" CHECK VALVE, E□TERNAL SPRING LOADED
5	RESTRAINED FCA
6	4" DIP SPOOL PIECE
7	4" Ø 11.25° ELL, FLG x FLG
8	4"Ø 22.5° ELL, FLG x FLG
9	4"□4"□4" DIP TEE, FLG □FLG □FLG
10	4" EBAA IRON "FLE□TEND" DOUBLE BALL E□PANSION JOINT, FLG □FLG
11	2" MOTOR OPERATED BUTTERFLY VALVE, FLG □FLG
12	3/8" MIN THICK STEEL PLATE, 14" OD

0 2' 4' 6'

SCALE: 1/2"=1'-0"

0 1' 2' 3' 4'

SCALE: 3/4"=1'-0"

- FINAL DESIGN - FOR AGENCY APPROVAL ONLY

REGISTERED PROFESSIONAL ENGINEER BENJAMIN J. WUERL C 67811 EXP 6/30/17 STATE OF CALIFORNIA

ETIC ENGINEERING

ARCADIS

NO.	DATE	DESCRIPTION	GM/SPEC	DWN	CHKD	SUPV	APVD	BY
0	11/18/15	FINAL DESIGN		AJW	KLD	BW	RAO	

REVISIONS

APPROVED BY	
RAO	SO
	SUPV
	DSGN
	DWN
	CHKD
	OK
	DATE
	SCALES

TOPOCK GROUNDWATER REMEDIATION PROJECT

CONDITIONED WATER STORAGE TANK MECHANICAL DETAILS

GAS TRANSMISSION & DISTRIBUTION

PACIFIC GAS AND ELECTRIC COMPANY

SAN FRANCISCO, CALIFORNIA

MICROFILM	
BILL OF MATL	
DWG LIST	
SUPSDS	
SUPSD BY	
SHEET NO.	of SHEETS
M-14-05	REV 0

N1808

11/02/2015, 13:17, G:\Graphics\ART\TOPOCK-01\Submittal_100%\DWGs\M-Mechanical\M-14-05.dwg, Tab: M-14-05

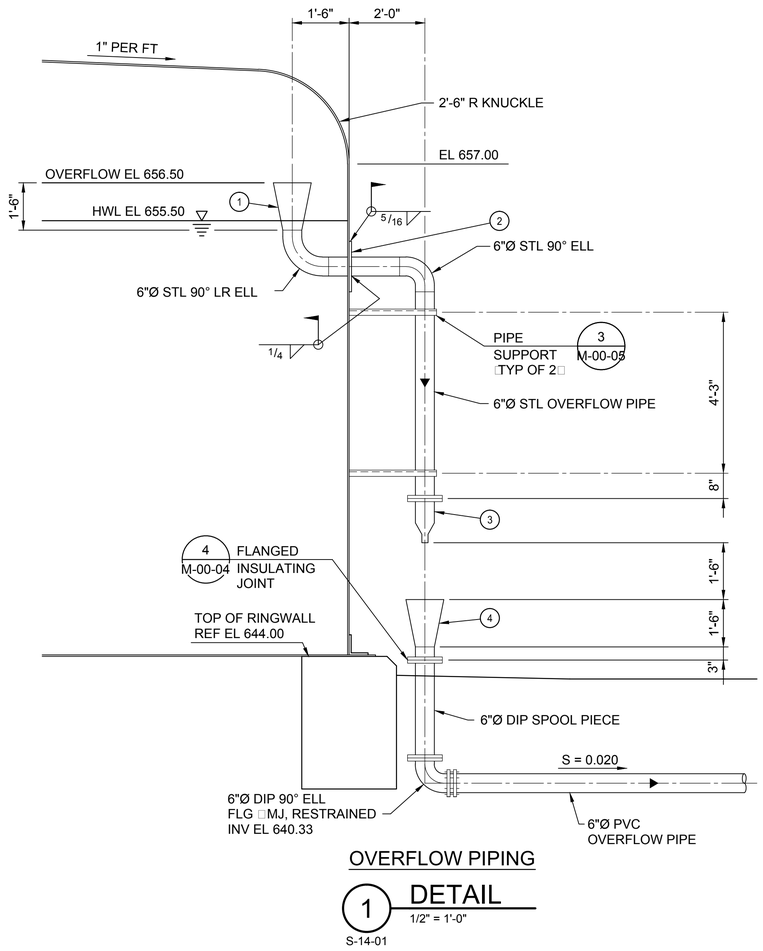

OVERFLOW PIPING

1 DETAIL

1/2" = 1'-0"

S-14-01

LEGEND

(1) REFERENCE ITEM NUMBER IN SCHEDULE

SCHEDULE

ITEM	DESCRIPTION
1	12" □6" STEEL CONE, 3/8" WALL
2	3/8" MIN THK STL PLATE, 16" OD
3	ONY□ VALVE CO 6" FLANGED "DUCKBILL" CHECK VALVE, SERIES DBCP
4	12" □6" STEEL CONE, 3/8" WALL, EPO□Y COATED WITH SS 316 BIRDSCREEN ON WIDE END □TOP□

NOTES:

1. DIMENSIONS, WELDING, AND DETAILS NOT SHOWN SHALL BE AS PER TANK MANUFACTURER'S APPROVED SUBMITTALS.

- FINAL DESIGN - FOR AGENCY APPROVAL ONLY

REGISTERED PROFESSIONAL ENGINEER BENJAMIN J. WUERL C 67811 EXP 6/30/17 STATE OF CALIFORNIA

ETIC ENGINEERING

ARCADIS

NO.	DATE	DESCRIPTION	GM/SPEC	DWN	CHKD	SUPV	APVD BY
0	11/18/15	FINAL DESIGN	AJW	KLD	BW	RAO	

REVISIONS

APPROVED BY: RAO

SO | SUPV | DSGN | DWN | CHKD | OK | DATE | SCALES

TOPOCK GROUNDWATER REMEDIATION PROJECT

CONDITIONED WATER STORAGE TANK MECHANICAL DETAILS

GAS TRANSMISSION & DISTRIBUTION

PACIFIC GAS AND ELECTRIC COMPANY

SAN FRANCISCO, CALIFORNIA

MICROFILM | BILL OF MATL | DWG LIST | SUPSDS | SUPSD BY

SHEET NO. M-14-06 of SHEETS | REV 0

11/02/2015, 13:19, G:\Graphics\ART\TOPOCK-01\Submittal_100%\DWGs\M-Mechanical\M-14-06.dwg, Tab: M-14-06

N1808

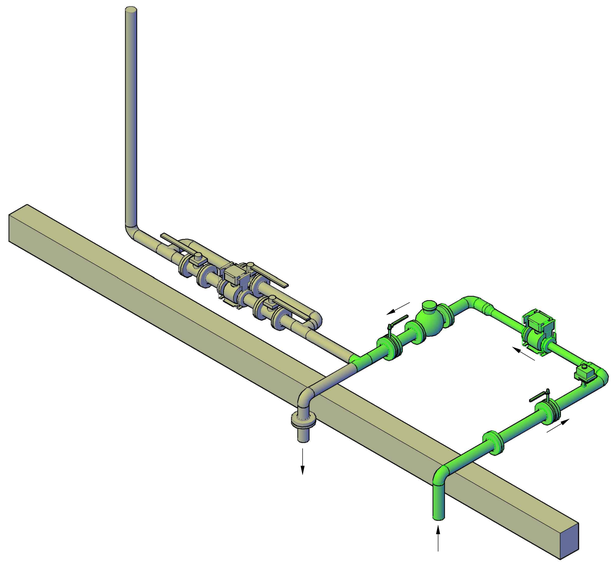

1 PIPING ISOMETRIC VIEW
1/2" = 1'-0"
C-07-82

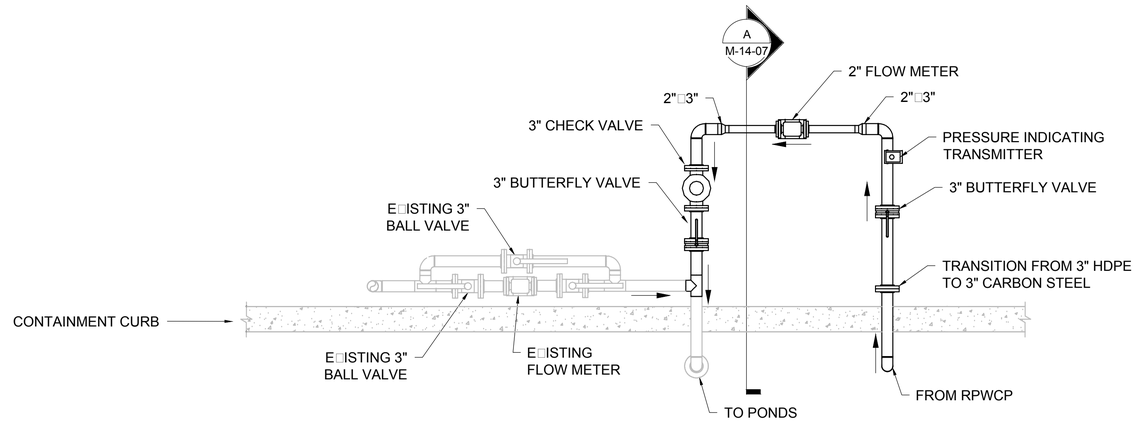

2 POND CONNECTION PLAN
1/2" = 1'-0"
M-14-07

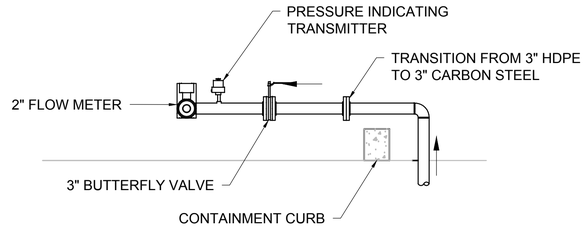

A SECTION
1/2" = 1'-0"
M-14-07

- FINAL DESIGN - FOR AGENCY APPROVAL ONLY

REGISTERED PROFESSIONAL ENGINEER
BENJAMIN J. WUESTL
C 67811
EXP 6/30/17
CIVIL
STATE OF CALIFORNIA

ETIC ENGINEERING

ARCADIS

NO.	DATE	DESCRIPTION	GM/SPEC	DWN	CHKD	SUPV	APVD BY
0	11/18/15	FINAL DESIGN	AJW	KLD	BW	RAO	

REVISIONS

APPROVED BY: RAO

SO
SUPV
DSGN
DWN
CHKD
OK
DATE
SCALES

TOPOCK GROUNDWATER REMEDIATION PROJECT

WW TANK CONNECTION MECHANICAL DETAILS

GAS TRANSMISSION & DISTRIBUTION
PACIFIC GAS AND ELECTRIC COMPANY
SAN FRANCISCO, CALIFORNIA

MICROFILM
BILL OF MATL
DWG LIST
SUPSDS
SUPSD BY
SHEET NO. M-14-07 of SHEETS
REV 0

N1808

11/02/2015, 13:20, G:\Graphics\ARITOPOCK-01\Submittal_100%\DWGs\M-Mechanical\M-14-07.dwg, Tab: M-14-07

EQUIPMENT SCHEDULE						
ITEM	PIPE SIZE	MATERIAL	PROCESS FLOW	PIPE ID	DESCRIPTION	ID TAG
1		CS	TREATED WATER	16	CONDITIONED WATER STORAGE TANK	TNK-*1401 TNK-*1402
2	2"	CS	WASTE STREAM	38	CONDITIONED WATER TANK FARM SUMP PUMP	PMP-*1407
3	2"	CS	TREATED WATER	16	CONDITIONED WATER TRANSFER PUMP	PMP-*1405 PMP-*1406
4	2"	CS	TREATED WATER	16	MIXER	MXR-*1408
5	4"	CPVC	DRAIN	51	BALL VALVE	V-*1402C V-*1401C
6	2"	CPVC	TREATED WATER	16	BUTTERFLY VALVE	V-*1402B V-*1401B
7	2"	CPVC	TREATED WATER	16	CHECK VALVE	V-*1406A V-*1405B
8	2"	CPVC	TREATED WATER	16	BALL VALVE	XV-*1415 XV-*1416
9	2"	CPVC	TREATED WATER	16	BALL VALVE	SP-*1405A
10	2"	CPVC	TREATED WATER	16	BUTTERFLY VALVE	V-*1405C XV-*1411 V-*1401A XV-*1412 V-*1402A V-*1406B
11	2"	CPVC	WASTE STREAM	38	BUTTERFLY VALVE	V-*1407D V-*1407B
12	2"	CPVC	WASTE STREAM	38	SWING CHECK	V-*1407C V-*1407A
13	2"	PVC	TREATED WATER	16	PH SENSOR	AE-*1481A
14	2"	PVC	TREATED WATER	16	CONDUCTIVITY SENSOR	AE-*1481B
15	2"	PVC	TREATED WATER	16	TURBIDITY SENSOR	AE-1482
16	2"	PVC	TREATED WATER	16	PRESSURE GAUGE	PI-*1461
17	2"	PVC PVC	WASTE STREAM	38	PRESSURE GAUGE	PI-*1462 PI-*1463
18	2"	Teflon	TREATED WATER	16	MAGNETIC FLOW METER	FE-*1471
19	2"	Teflon	WASTE STREAM	38	MAGNETIC FLOW METER	FE-*1472
20	2"	CPVC	TREATED WATER	16	BALL VALVE	V-*1408B V-*1408A V-*1409A
21	2"	PVC	TREATED WATER	16	LEVEL ELEMENT	LE-*1454 LE-*1452
22	2"	CPVC	TREATED WATER	16	PRESSURE RELIEF VALVE	PSV-*1409

- FINAL DESIGN -
FOR AGENCY
APPROVAL ONLY

REGISTERED PROFESSIONAL ENGINEER
BENJAMIN J. WUERL
C 67811
EXP 6/30/17
STATE OF CALIFORNIA

ETIC ENGINEERING

ARCADIS

N1808

NO.	DATE	DESCRIPTION	GM/SPEC	DWN	CHKD	SUPV	APVD BY
REVISIONS							
0	11/18/15	FINAL DESIGN	AJW	KLD	BW	RAO	
REVISIONS							

APPROVED BY	
RAO	SO
	SUPV
	DSGN
	DWN
	CHKD
	OK
	DATE
	SCALES

TOPOCK GROUNDWATER REMEDIATION PROJECT

CONDITIONED WATER STORAGE TANK MECHANICAL SCHEDULE

GAS TRANSMISSION & DISTRIBUTION
PACIFIC GAS AND ELECTRIC COMPANY
SAN FRANCISCO, CALIFORNIA

MICROFILM	
BILL OF MATL	
DWG LIST	
SUPSDS	
SUPSD BY	
SHEET NO.	of SHEETS
M-14-08	REV 0

11/02/2015, 13:22, G:\Graphics\ART\TOPOCK-01\Submittal_100%\DWGs\M-Mechanical\M-14-08.dwg, Tab: M-14-08

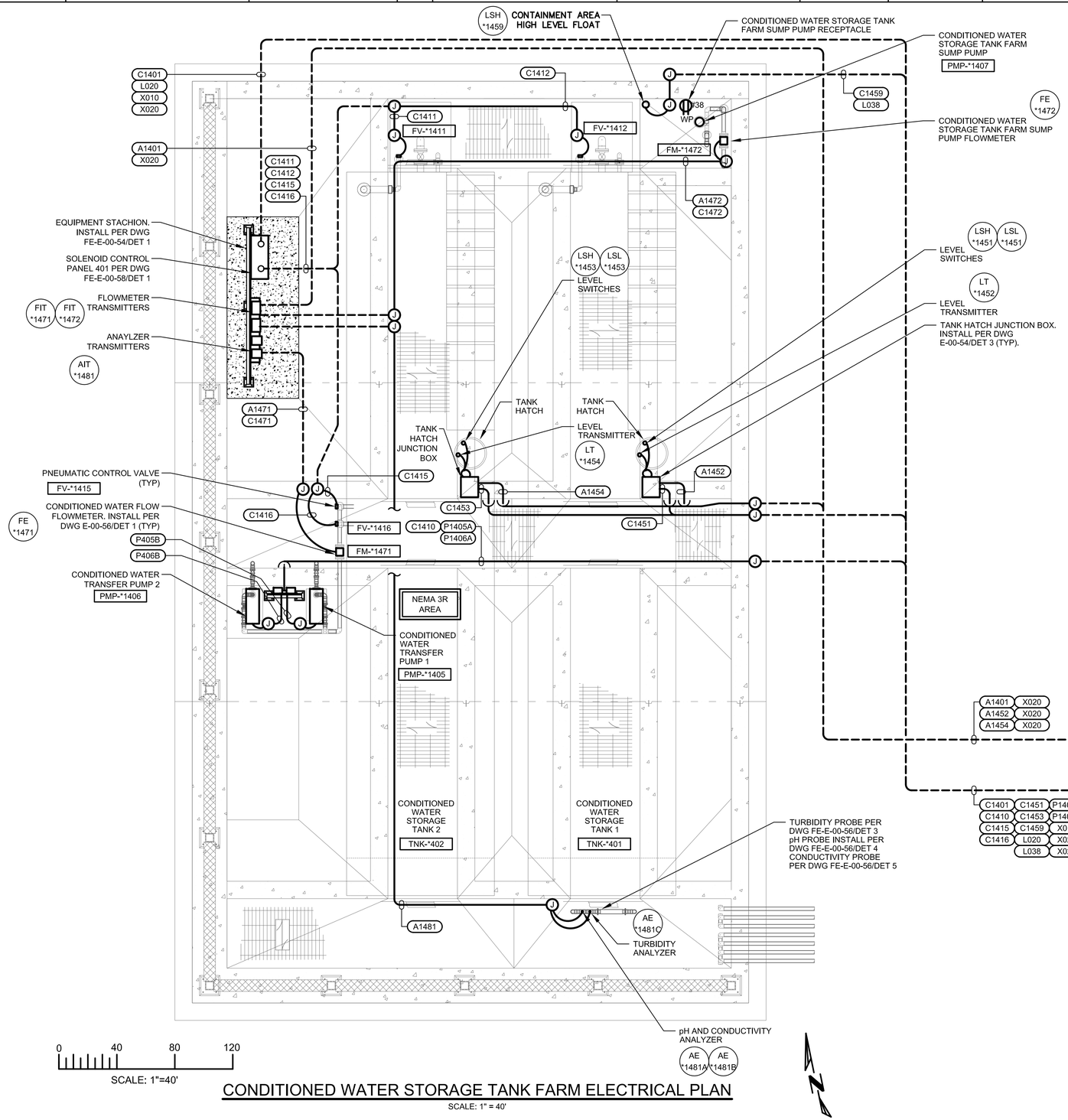

0 40 80 120

SCALE: 1"=40'

CONDITIONED WATER STORAGE TANK FARM ELECTRICAL PLAN

SCALE: 1" = 40'

ELECTRICAL PLAN NOTES:

1. SEE ELECTRICAL PLAN NOTES ON DRAWING E-00-02.

- FINAL DESIGN - FOR AGENCY APPROVAL ONLY

REGISTERED PROFESSIONAL ENGINEER JOHN M. SIDOTTI 20532 Exp. 9-30-17 ELECTRICAL STATE OF CALIFORNIA

FRISCH ENGINEERING, INC.
CONSULTING ELECTRICAL ENGINEERS
13405 FOLSOM BLVD, UNIT 600
FOLSOM, CA 95630
PH 916 353 1025
WWW.FRISCHENGINEERING.COM

ARCADIS

NO.	DATE	DESCRIPTION	GM/SPEC	DWN	CHKD	SUPV	APVD BY
1	11/18/15	FINAL DESIGN		MBY	TPF	JMS	RAO
0	9/8/14	PRE-FINAL (90%) DESIGN		MBY		TPF	

REVISIONS

APPROVED BY
RAO

SO	
SUPV	JMS
DSGN	MBY
DWN	MBY
CHKD	TPF
OK	JMS
DATE	
SCALES	N/A

TOPOCK GROUNDWATER REMEDIATION PROJECT

CONDITIONED WATER TANK FARM ELECTRICAL PLAN

GAS TRANSMISSION & DISTRIBUTION

PACIFIC GAS AND ELECTRIC COMPANY
SAN FRANCISCO, CALIFORNIA

MICROFILM	
BILL OF MATL	
DWG LIST	
SUPSDS	
SUPSD BY	
SHEET NO.	of SHEETS
E-14-01	REV 0

PLOT DATE: Oct 29, 2015 PLOT TIME: 4:04:42pm

FILENAME: E-14-01.dwg

N1808

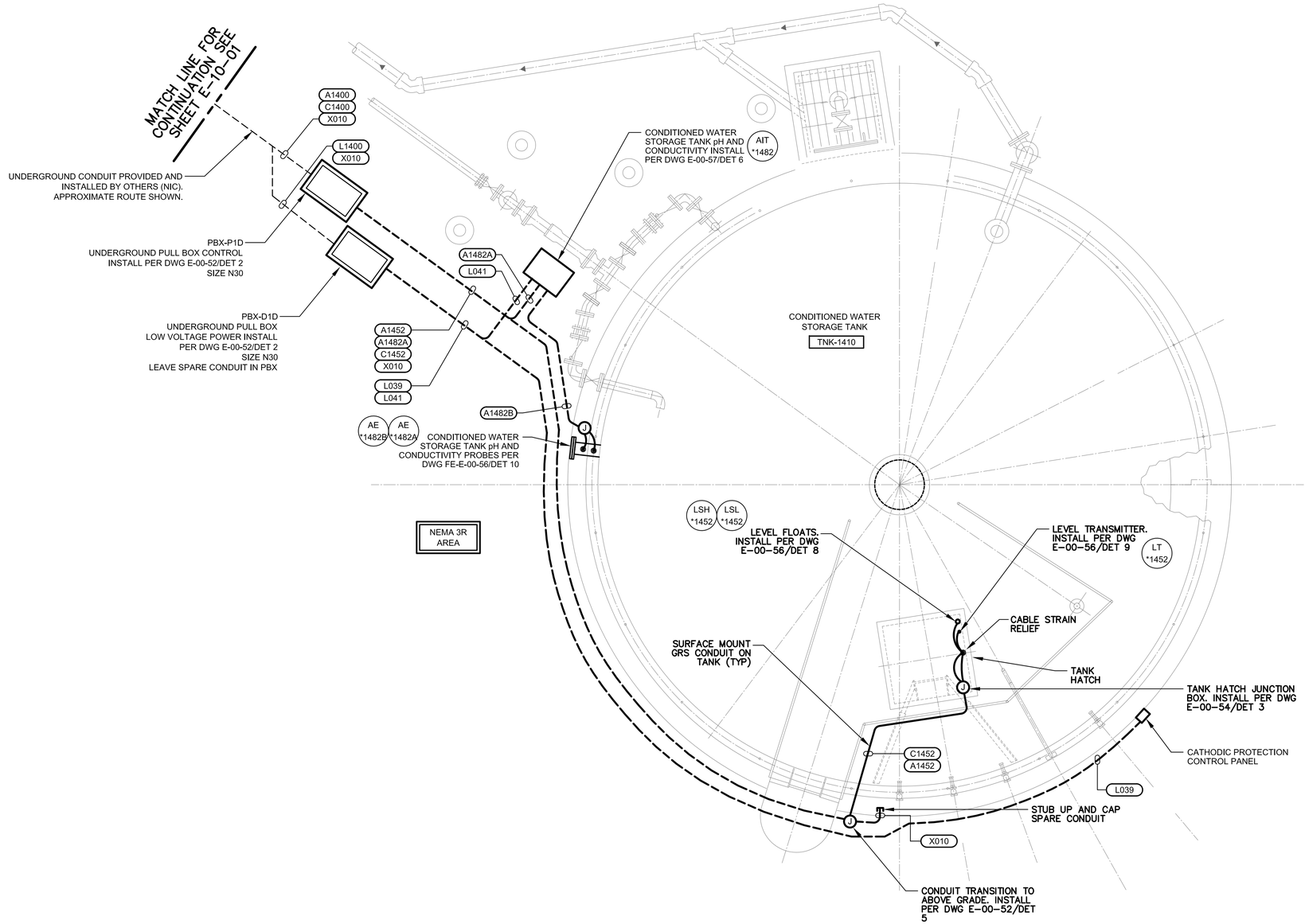

ELECTRICAL PLAN NOTES:

1. SEE ELECTRICAL PLAN NOTES ON DRAWING E-00-02.

0 30 60 90

SCALE: 1"=30'

CONDITIONED WATER STORAGE TANK ELECTRICAL PLAN

N

- FINAL DESIGN - FOR AGENCY APPROVAL ONLY

REGISTERED PROFESSIONAL ENGINEER JOHN M. SIOTA 20532 Exp. 9-30-17 ELECTRICAL STATE OF CALIFORNIA

FRISCH ENGINEERING, INC.
CONSULTING ELECTRICAL ENGINEERS
13405 FOLSOM BLVD, UNIT 600
FOLSOM, CA 95630
PH 916 353 1025
WWW.FRISCHENGINEERING.COM

ARCADIS

NO.	DATE	DESCRIPTION	GM/SPEC	DWN	CHKD	SUPV	APVD BY
1	11/18/15	FINAL DESIGN		MBY	TPF	JMS	RAO
0	9/8/14	PRE-FINAL (90%) DESIGN		MBY		TPF	

REVISIONS

APPROVED BY	
RAO	

SO	
SUPV	JMS
DSGN	MBY
DWN	MBY
CHKD	TPF
OK	JMS
DATE	
SCALES	N/A

TOPOCK GROUNDWATER REMEDIATION PROJECT

CONDITIONED WATER STORAGE TANK ELECTRICAL PLAN

GAS TRANSMISSION & DISTRIBUTION

PACIFIC GAS AND ELECTRIC COMPANY
SAN FRANCISCO, CALIFORNIA

MICROFILM	
BILL OF MATL	
DWG LIST	
SUPSDS	
SUPSD BY	
SHEET NO.	of SHEETS
E-14-02	REV 0

PLOT DATE: Oct 29, 2015 PLOT TIME: 4:04:23pm

FILENAME: E-14-02.dwg

N1808

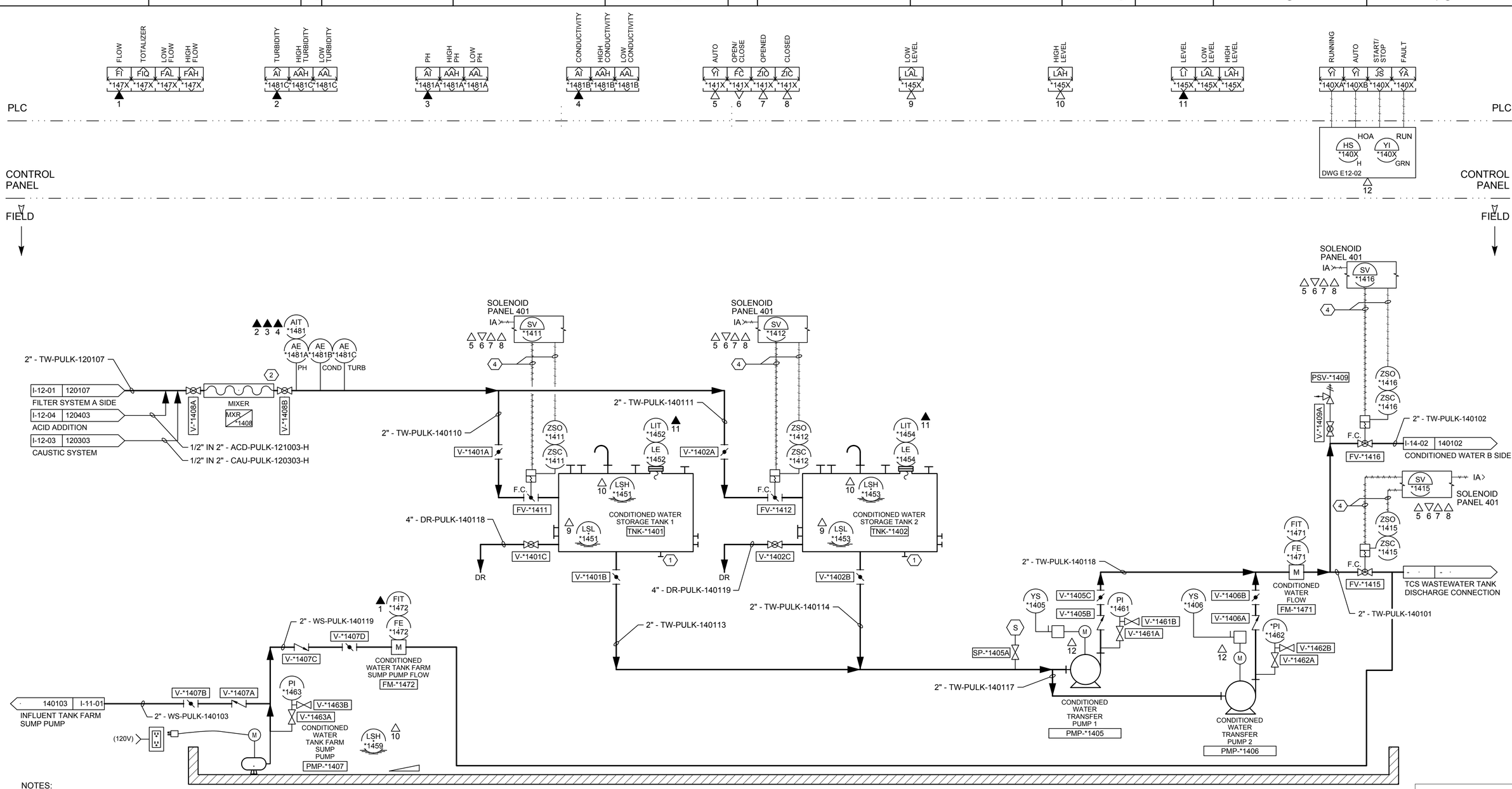

NOTES:

1. FOR FULL SCADA, INSTRUMENT AND EQUIPMENT TAG NUMBER IDENTIFICATION REPLACE "*" ON THIS DRAWING WITH LOCATION ID RTP01.
2. 'X' IS A PLACEHOLDER TO ALLOW MULTIPLE DEVICES TO REFERENCE THE SAME I/O SYMBOL.

NOTES REFERENCED IN DRAWING:

1. NOZZLES PROVIDED FOR FUTURE RECIRCULATION PUMP AND EDUCTORS, PH, CONDUCTIVITY AND TURBIDITY ANALYZERS AND CHEMICAL FEED TO TANKS.
2. MINIMUM DISTANCE TO BE DETERMINED.
3. BLOWDOWN LINE CONNECTS TO TCS WASTEWATER TANK AND IS PUMPED FROM THERE TO EVAPORATION PONDS.
4. AIR TUBING AND CONTROL WIRES TO SOLENOID PANEL 401, TYPICAL FOR ALL PNEUMATIC VALVES.

- FINAL DESIGN - FOR AGENCY APPROVAL ONLY

REGISTERED PROFESSIONAL ENGINEER DWAYNE CAMPBELL No. C 61721 Exp 06/30/16 CIVIL STATE OF CALIFORNIA

ETIC ENGINEERING

ARCADIS

NO.	DATE	DESCRIPTION	GM/SPEC	DWN	CHKD	SUPV	APVD BY
2	11/18/15	FINAL DESIGN		AJW	JPB	DAC	RAO
1	9/8/14	PRE-FINAL (90%) DESIGN		MBY			TPF
0	4/5/13	INTERMEDIATE (60%) DESIGN		MBY			TPF

REVISIONS

APPROVED BY	
RAO	SO
	SUPV
	DSGN
	DWN
	CHKD
	OK
	DATE
	SCALES

TOPOCK GROUNDWATER REMEDIATION PROJECT

P&ID
CONDITIONED WATER STORAGE TANK FARM A SIDE

GAS TRANSMISSION & DISTRIBUTION

PACIFIC GAS AND ELECTRIC COMPANY

SAN FRANCISCO, CALIFORNIA

MICROFILM	
BILL OF MATL	
DWG LIST	
SUPSDS	
SUPSD BY	
SHEET NO.	of SHEETS
I-14-01	REV 2

N1608

11/03/2015, 17:27, G:\Graphics\ARTOPOCK-01\Submittal_100%\DWGs\I-Instrumentation\I-14-01.dwg, Tab: I-14-01

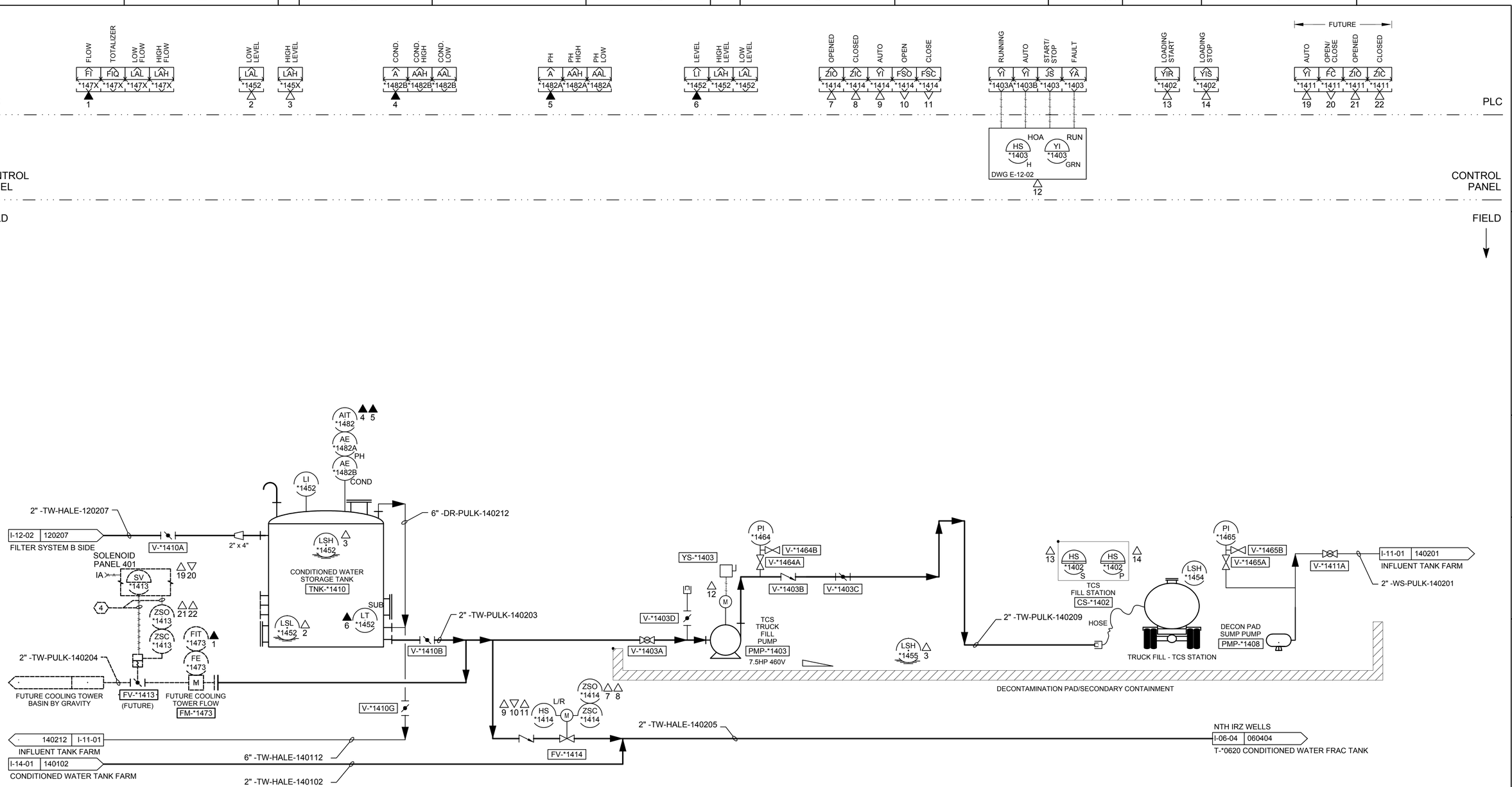

NOTES:

1. FOR FULL SCADA, INSTRUMENT AND EQUIPMENT TAG NUMBER IDENTIFICATION REPLACE "*" ON THIS DRAWING WITH LOCATION ID RTP01.
2. 'X' IS A PLACEHOLDER TO ALLOW MULTIPLE DEVICES TO REFERENCE THE SAME I/O SYMBOL.

- FINAL DESIGN - FOR AGENCY APPROVAL ONLY

REGISTERED PROFESSIONAL ENGINEER — DWAYNE CAMPBELL — No. C 072176 — Exp 06/30/16 — CIVIL — STATE OF CALIFORNIA

ETIC ENGINEERING

ARCADIS

NO.	DATE	DESCRIPTION	GM/SPEC	DWN	CHKD	SUPV	APVD BY
2	11/18/15	FINAL DESIGN		AJW	JPB	DAC	RAO
1	9/8/14	PRE-FINAL (90%) DESIGN		MBY			TPF
0	4/5/13	INTERMEDIATE (60%) DESIGN		MBY			TPF

REVISIONS

APPROVED BY	SO
RAO	SUPV
	DSGN
	DWN
	CHKD
	OK
	DATE
	SCALES

TOPOCK GROUNDWATER REMEDIATION PROJECT

P&ID CONDITIONED WATER B SIDE

GAS TRANSMISSION & DISTRIBUTION

PACIFIC GAS AND ELECTRIC COMPANY
SAN FRANCISCO, CALIFORNIA

MICROFILM	
BILL OF MATL	
DWG LIST	
SUPSDS	
SUPSD BY	
SHEET NO. of	SHEETS
I-14-02	REV 2

11/03/2015, 17:20, G:\Graphics\ARI\TOPOCK-011Submittal_100%\DWGs\I-Instrumentation\I-14-02.dwg, Tab: I-14-02

N1808

POTABLE WATER AND SEWER SCHEMATIC

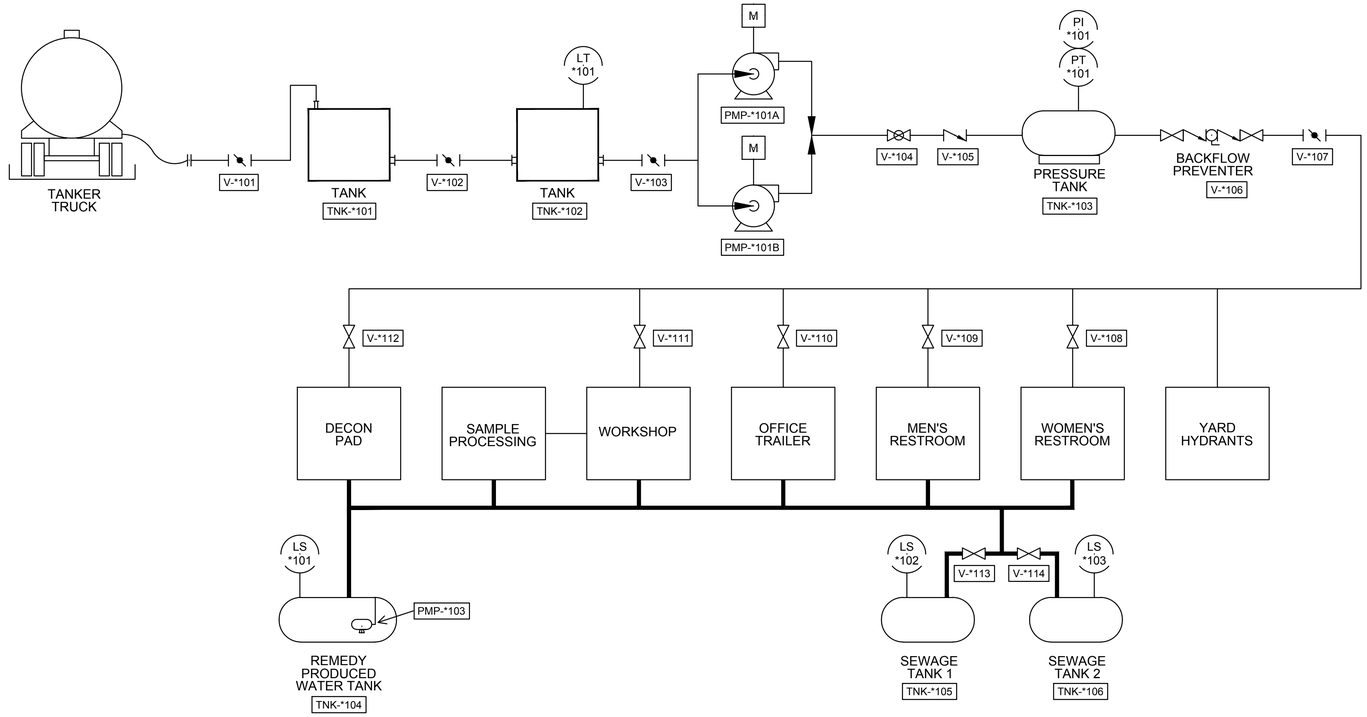

FIREWATER SCHEMATIC

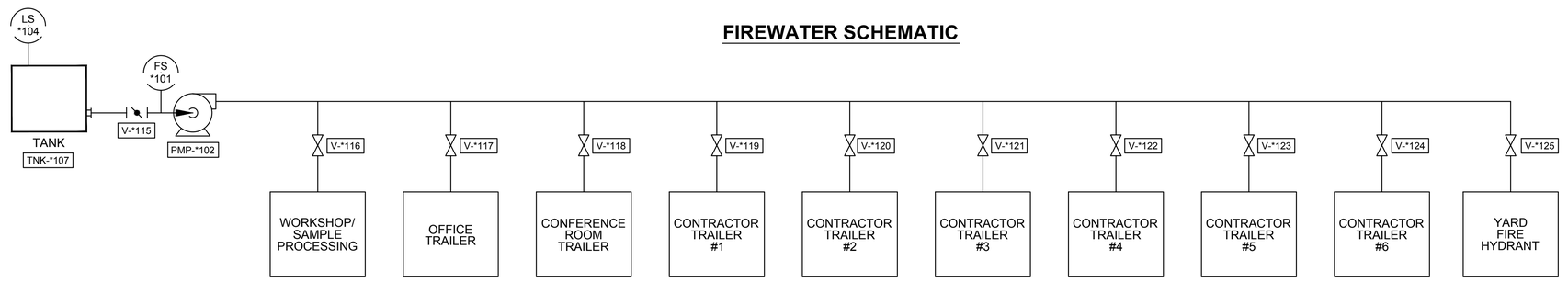

LEGEND

- WATER LINE
- SEWER LINE
- BUTTERFLY VALVE
- GLOBE VALVE
- CHECK VALVE
- GATE VALVE
- FS FLOW SWITCH
- LS LEVEL SWITCH
- LT LEVEL TRANSMITTER
- PI PRESSURE INDICATOR
- PT PRESSURE TRANSMITTER
- PMP PUMP
- TNK TANK
- V VALVE
- M MOTOR
- PUMP
- SUBMERSIBLE PUMP

NOTE

1. TAG NUMBER "*" IS A PLACEHOLDER FOR THE LOCATION ID. SEE DESCRIPTION BELOW FOR FULL LOCATION ID NUMBER.

TYPE LOCATION ID NUMBER
TNK-PM-XXX

- FINAL DESIGN - FOR AGENCY APPROVAL ONLY

REGISTERED PROFESSIONAL ENGINEER BENJAMIN J. WUEST C 67811 EXP 6/30/17 STATE OF CALIFORNIA

ETIC ENGINEERING

ARCADIS

NO.	DATE	DESCRIPTION	GM/SPEC	DWN	CHKD	SUPV	APVD BY
1	11/18/15	FINAL DESIGN		AJW	JPB	BW	RAO
0	2/2/15	SUPPLEMENTAL PRE-FINAL (90%) DESIGN		AJW	KTA	JPB	JEF

REVISIONS

APPROVED BY	RAO
SO	
SUPV	
DSGN	
DWN	
CHKD	
OK	
DATE	
SCALES	

TOPOCK GROUNDWATER REMEDIATION PROJECT

CONSTRUCTION HEADQUARTERS PROCESS FLOW DIAGRAM

GAS TRANSMISSION & DISTRIBUTION
PACIFIC GAS AND ELECTRIC COMPANY
SAN FRANCISCO, CALIFORNIA

MICROFILM	
BILL OF MATL	
DWG LIST	
SUPSDS	
SUPSD BY	
SHEET NO.	of SHEETS
G-15-01	REV 1

N1808

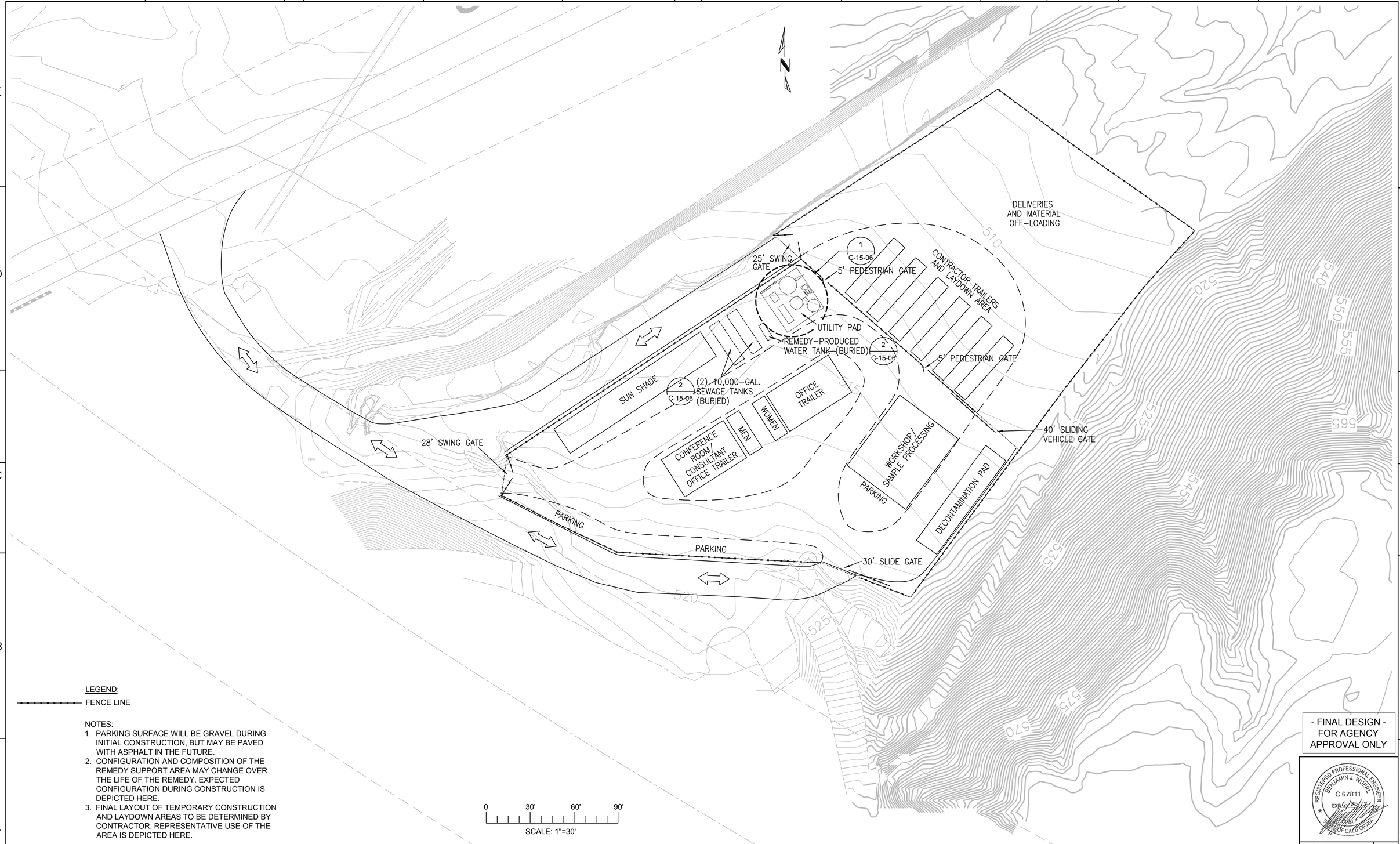

LEGEND:

FENCE LINE

NOTES:

1. PARKING SURFACE WILL BE GRAVEL DURING INITIAL CONSTRUCTION, BUT MAY BE PAVED WITH ASPHALT IN THE FUTURE.
2. CONFIGURATION AND COMPOSITION OF THE REMEDY SUPPORT AREA MAY CHANGE OVER THE LIFE OF THE REMEDY. EXPECTED CONFIGURATION DURING CONSTRUCTION IS DEPICTED HERE.
3. FINAL LAYOUT OF TEMPORARY CONSTRUCTION AND LAYDOWN AREAS TO BE DETERMINED BY CONTRACTOR. REPRESENTATIVE USE OF THE AREA IS DEPICTED HERE.

0 30' 60' 90'

SCALE: 1"=30'

- FINAL DESIGN - FOR AGENCY APPROVAL ONLY

REGISTERED PROFESSIONAL ENGINEER BENJAMIN J. WUERL C 67811 EXP 6/30/17 STATE OF CALIFORNIA

ETIC ENGINEERING

ARCADIS

NO.	DATE	DESCRIPTION	GM/SPEC	DWN	CHKD	SUPV	APVD BY
2	11/18/15	FINAL DESIGN		AJW	WLM	BW	RAO
1	8/5/15	90% RTC RESOLUTION		AJW	KLD	WLM	BJW
0	2/2/15	SUPPLEMENTAL PRE-FINAL (90%) DESIGN		AJW	MSL	JPB	JEF

REVISIONS

APPROVED BY	SO
	SUPV
RAO	DSGN
	DWN
	CHKD
	OK
	DATE
	SCALES

TOPOCK GROUNDWATER REMEDIATION PROJECT

CONSTRUCTION HEADQUARTERS YARD PLAN

GAS TRANSMISSION & DISTRIBUTION

PACIFIC GAS AND ELECTRIC COMPANY
SAN FRANCISCO, CALIFORNIA

MICROFILM	
BILL OF MATL	
DWG LIST	
SUPSDS	
SUPSD BY	
SHEET NO.	of SHEETS
C-15-01	REV 2

N1808

11/03/2015, 13:55, G:\Graphics\ARIITOPOCK-01\Submittal_100%\DWGs\C-Civil\C-15-01 thru 08.dwg, Tab: C-15-01

LEGEND:

- FENCE LINE
- ELECTRICAL AND TELECOMMUNICATIONS CONNECTION
- FIRE PROTECTION WATER AND SEWER CONNECTION
- WATER CONNECTION

NOTES:

1. CONFIGURATION AND COMPOSITION OF THE REMEDY SUPPORT AREA MAY CHANGE OVER THE LIFE OF THE REMEDY. EXPECTED CONFIGURATION DURING CONSTRUCTION IS DEPICTED HERE.
2. FINAL LAYOUT OF TEMPORARY CONSTRUCTION AND LAYDOWN AREAS TO BE DETERMINED BY CONTRACTOR. REPRESENTATIVE USE OF THE AREA IS DEPICTED HERE.

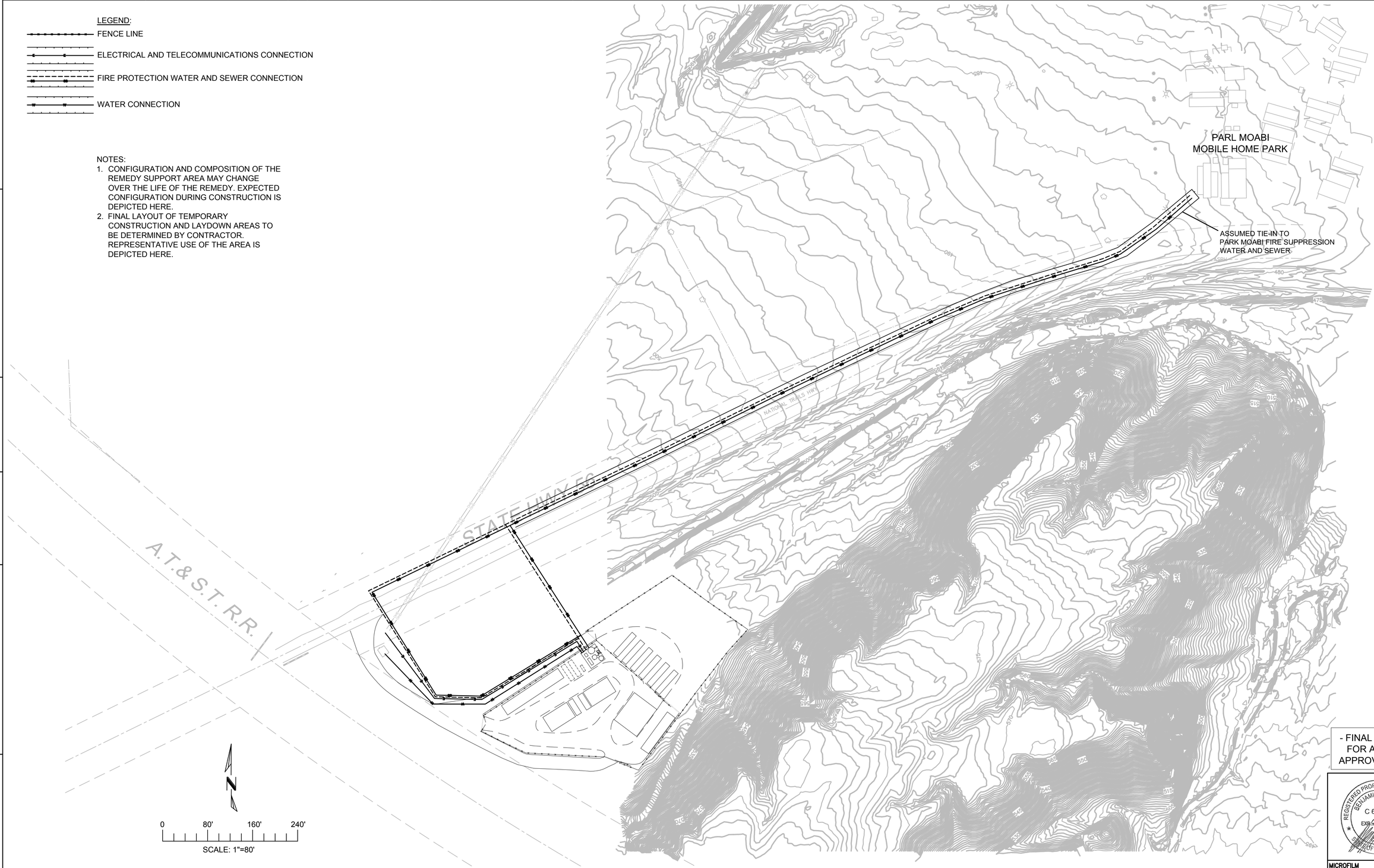

- FINAL DESIGN -
FOR AGENCY
APPROVAL ONLY

REGISTERED PROFESSIONAL ENGINEER
BENJAMIN J. WUERL
C 67811
EXP 6/30/17
STATE OF CALIFORNIA

ETIC ENGINEERING

ARCADIS

NO.	DATE	DESCRIPTION	GM/SPEC	DWN	CHKD	SUPV	APVD BY
2	11/18/15	FINAL DESIGN		AJW	WLM	BW	RAO
1	8/5/15	90% RTC RESOLUTION		AJW	KLD	WLM	BJW
0	2/2/15	SUPPLEMENTAL PRE-FINAL (90%) DESIGN		AJW	MSL	JPB	JEF

REVISIONS

APPROVED BY	SO
RAO	SUPV
	DSGN
	DWN
	CHKD
	OK
	DATE
	SCALES

TOPOCK GROUNDWATER REMEDIATION PROJECT

CONSTRUCTION HEADQUARTERS UTILITY CONNECTIONS

GAS TRANSMISSION & DISTRIBUTION
PACIFIC GAS AND ELECTRIC COMPANY
SAN FRANCISCO, CALIFORNIA

MICROFILM	
BILL OF MATL	
DWG LIST	
SUPSDS	
SUPSD BY	
SHEET NO.	of SHEETS
C-15-02	REV 2

N1808

11/03/2015, 13:54, G:\Graphics\ART\TOPOCK-01\Submittal_100%\DWG\sC-Civil\C-15-01 thru 08.dwg, Tab: C-15-02

LEGEND:

- WATER LINE
- REMEDY PRODUCED WATER LINE
- SANITARY SEWER LINE
- YARD HYDRANT
- BURIED GATE VALVE

NOTES:

1. ELECTRICAL CONDUIT SHOWN ON SHEET E-15-01.
2. FIRE SUPPRESSION WATER LINE SHOWN ON SHEET F-15-01.
3. SECURITY CONDUIT SHOWN ON SHEET C-15-04.
4. ALL GRAVITY SEWER AND REMEDY PRODUCED WATER PIPING TO BE INSTALLED AT A 1% SLOPE.
5. CONFIGURATION AND COMPOSITION OF THE REMEDY SUPPORT AREA MAY CHANGE OVER THE LIFE OF THE REMEDY. EXPECTED CONFIGURATION DURING CONSTRUCTION IS DEPICTED HERE.
6. FINAL LAYOUT OF TEMPORARY CONSTRUCTION AND LAYDOWN AREAS TO BE DETERMINED BY CONTRACTOR. REPRESENTATIVE USE OF THE AREA IS DEPICTED HERE.

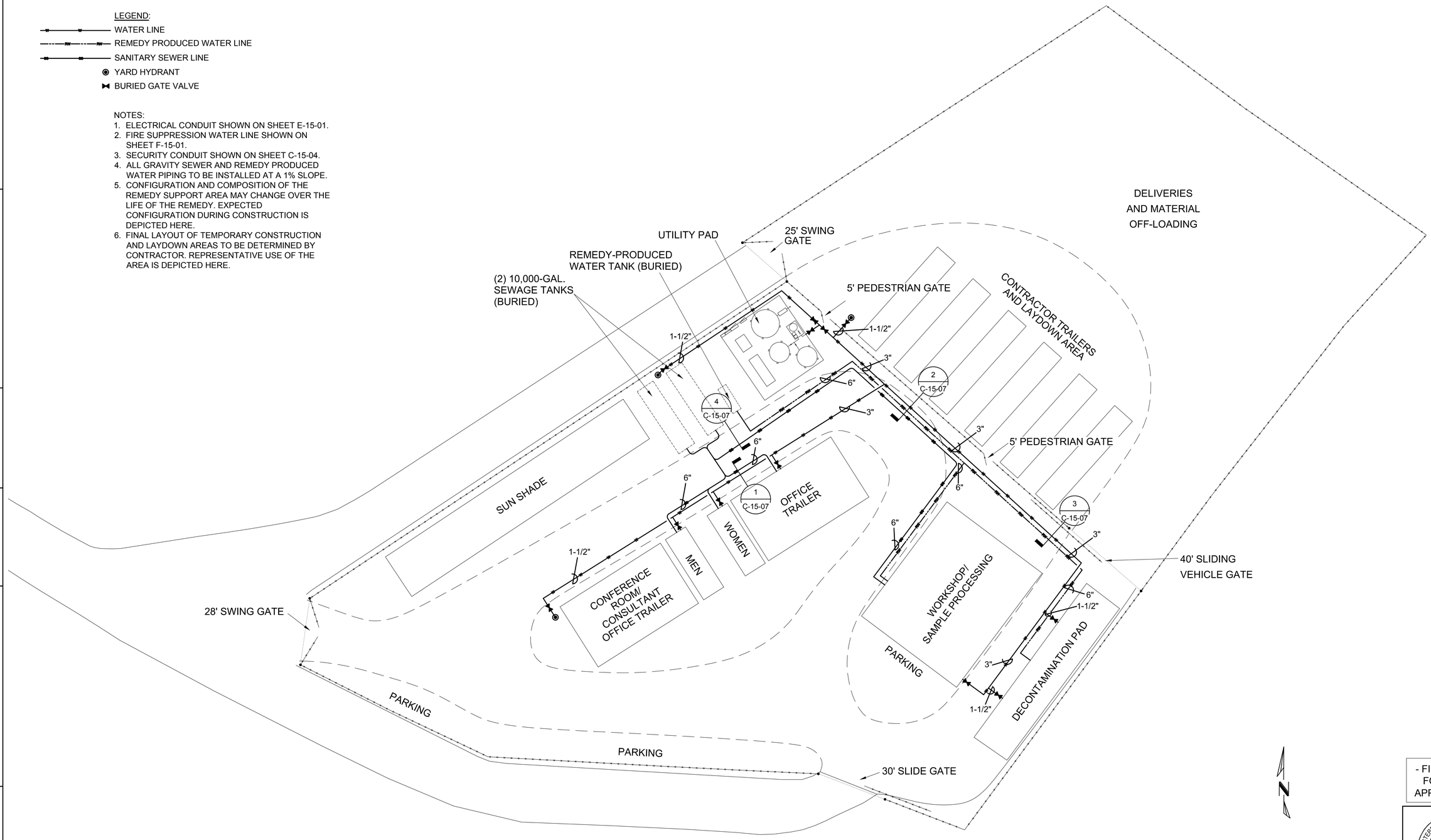

- FINAL DESIGN -
FOR AGENCY
APPROVAL ONLY

REGISTERED PROFESSIONAL ENGINEER
BENJAMIN J. WUERL
C 67811
EXP 6/30/17
CIVIL
STATE OF CALIFORNIA

NO.	DATE	DESCRIPTION	GM/SPEC	DWN	CHKD	SUPV	APVD BY
2	11/18/15	FINAL DESIGN		AJW	WLM	BW	RAO
1	8/5/15	90% RTC RESOLUTION		AJW	KLD	WLM	BJW
0	2/2/15	SUPPLEMENTAL PRE-FINAL (90%) DESIGN		AJW	MSL	JPB	JEF

REVISIONS

APPROVED BY	
	SO
RAO	SUPV
	DSGN
	DWN
	CHKD
	OK
	DATE
	SCALES

ETIC ENGINEERING

ARCADIS

TOPOCK GROUNDWATER REMEDIATION PROJECT

CONSTRUCTION HEADQUARTERS PIPING PLAN

GAS TRANSMISSION & DISTRIBUTION
PACIFIC GAS AND ELECTRIC COMPANY
SAN FRANCISCO, CALIFORNIA

MICROFILM	
BILL OF MATL	
DWG LIST	
SUPSDS	
SUPSD BY	
SHEET NO.	of SHEETS
C-15-03	REV 2

N1808

11/03/2015, 13:53, G:\Graphics\ARTOPOCK\01\Submittal_100%\DWG\eC-Civil\C15-01 thru 08.dwg, Tab: C-15-03

LEGEND:

SECURITY CONDUIT

NOTES:
1. CONFIGURATION AND COMPOSITION OF THE REMEDY SUPPORT AREA MAY CHANGE OVER THE LIFE OF THE REMEDY. EXPECTED CONFIGURATION DURING CONSTRUCTION IS DEPICTED HERE.
2. FINAL LAYOUT OF TEMPORARY CONSTRUCTION AND LAYDOWN AREAS TO BE DETERMINED BY CONTRACTOR. REPRESENTATIVE USE OF THE AREA IS DEPICTED HERE.

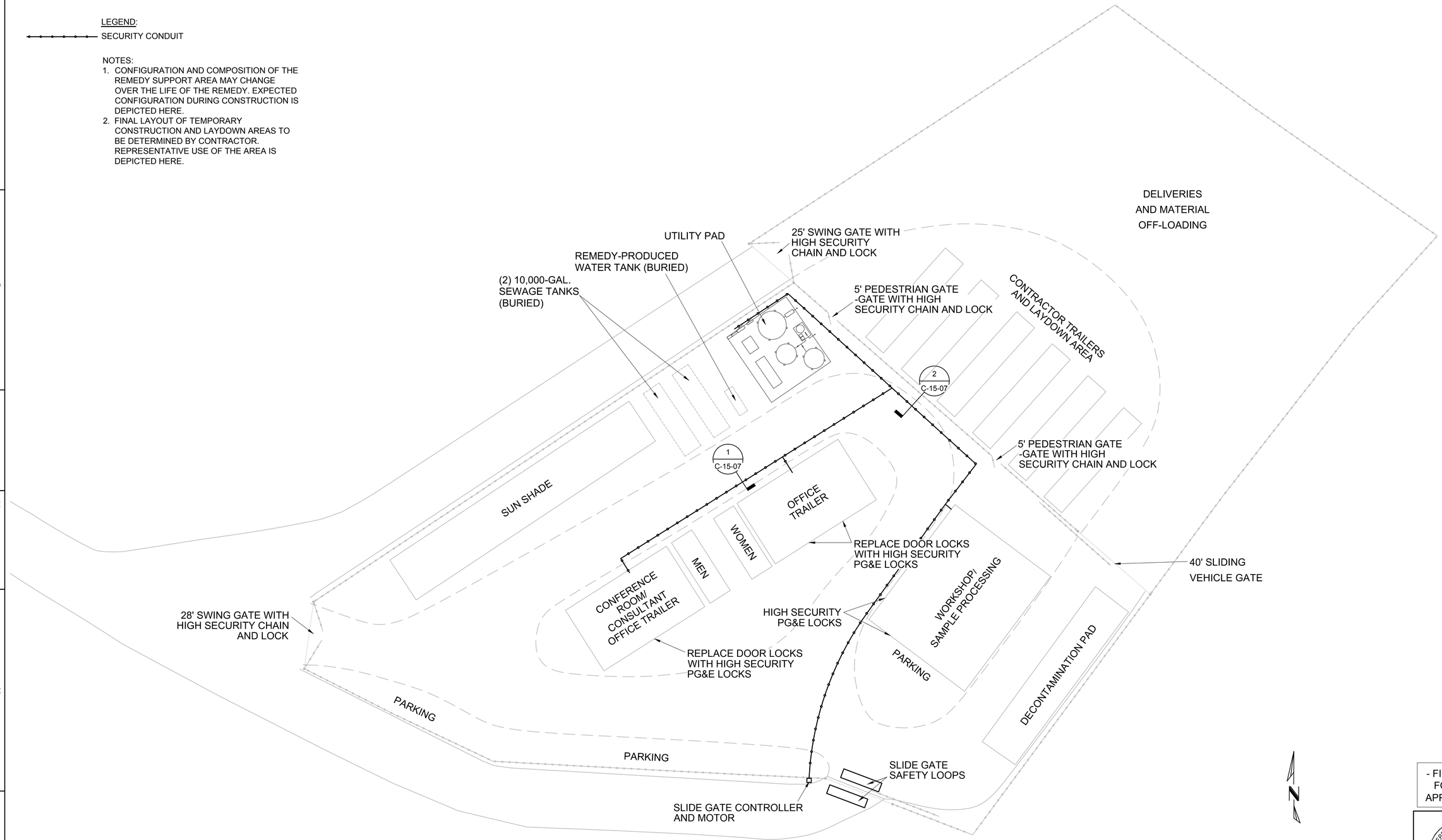

- FINAL DESIGN -
FOR AGENCY
APPROVAL ONLY

REGISTERED PROFESSIONAL ENGINEER
BENJAMIN J. WUERL
C 67811
Exp 6/30/17
CIVIL
STATE OF CALIFORNIA

ETIC ENGINEERING

ARCADIS

NO.	DATE	DESCRIPTION	GM/SPEC	DWN	CHKD	SUPV	APVD BY
2	11/18/15	FINAL DESIGN		AJW	WLM	BW	RAO
1	8/5/15	90% RTC RESOLUTION		AJW	KLD	WLM	BJW
0	2/2/15	SUPPLEMENTAL PRE-FINAL (90%) DESIGN		AJW	JMS	JPB	JEF

REVISIONS

APPROVED BY	
RAO	SO
	SUPV
	DSGN
	DWN
	CHKD
	OK
	DATE
	SCALES

TOPOCK GROUNDWATER REMEDIATION PROJECT

CONSTRUCTION HEADQUARTERS SECURITY PLAN

GAS TRANSMISSION & DISTRIBUTION
PACIFIC GAS AND ELECTRIC COMPANY
SAN FRANCISCO, CALIFORNIA

MICROFILM	
BILL OF MATL	
DWG LIST	
SUPSDS	
SUPSD BY	
SHEET NO.	of SHEETS
C-15-04	REV 2

N1808

11/03/2015, 13:32, G:\Graphics\ARTOTPOCK-01\Submittal_100%\DWGs\C-Civil\C15-01 thru 08.dwg, Tab: C-15-04

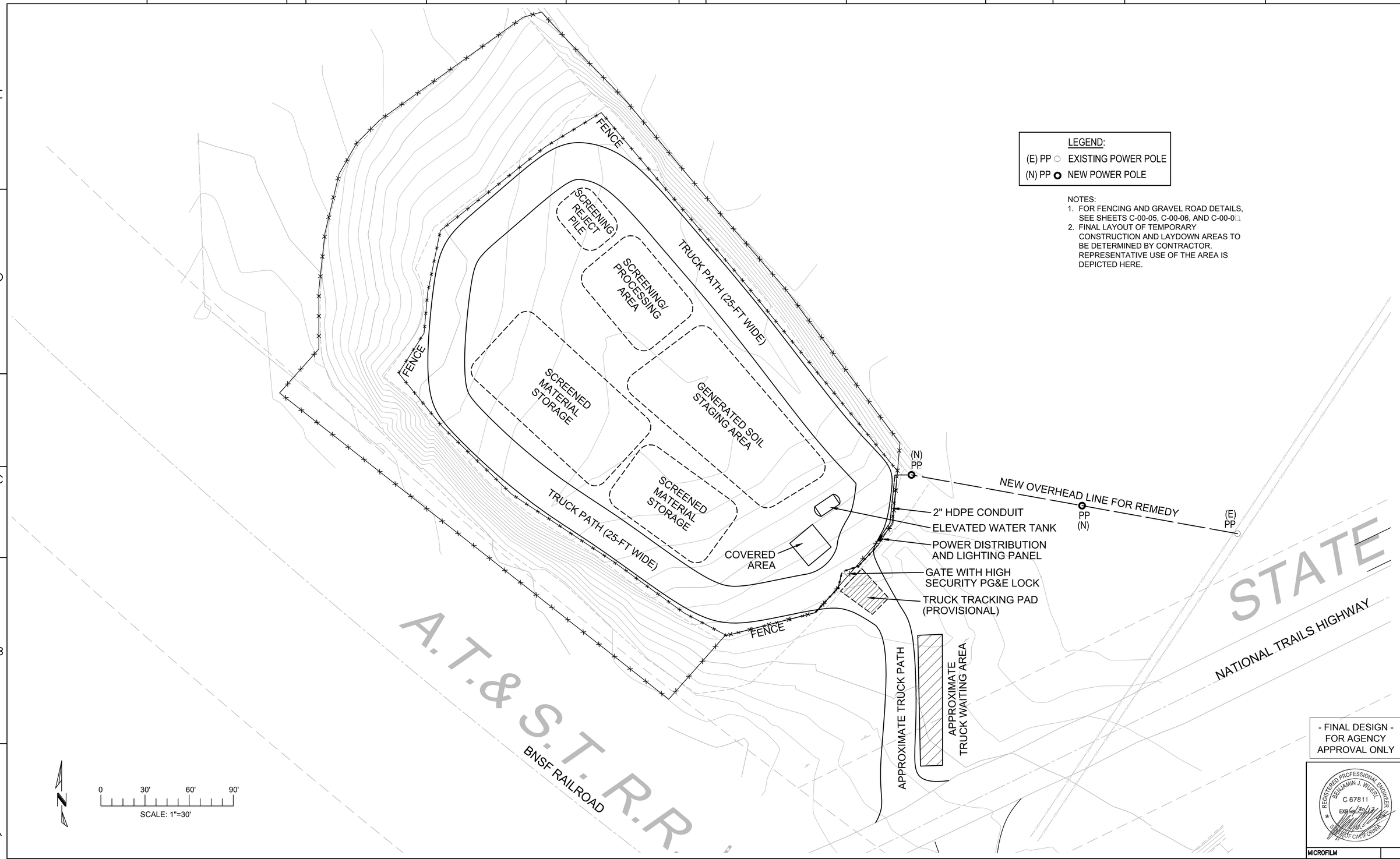

- FINAL DESIGN - FOR AGENCY APPROVAL ONLY

REGISTERED PROFESSIONAL ENGINEER BENJAMIN J. WUERL C 67811 EXP 6/30/17 CIVIL STATE OF CALIFORNIA

ETIC ENGINEERING

ARCADIS

NO.	DATE	DESCRIPTION	GM/SPEC	DWN	CHKD	SUPV	APVD BY
2	11/18/15	FINAL DESIGN		AJW	WLM	BW	RAO
1	8/5/15	90% RTC RESOLUTION		AJW	KLD	WLM	BJW
0	2/2/15	SUPPLEMENTAL PRE-FINAL (90%) DESIGN		AJW	MSL	JPB	JEF

REVISIONS

APPROVED BY	
RAO	SO
	SUPV
	DSGN
	DWN
	CHKD
	OK
	DATE
	SCALES

TOPOCK GROUNDWATER REMEDIATION PROJECT

PARK MOABI SOIL STAGING AND STORAGE SITE PLAN

GAS TRANSMISSION & DISTRIBUTION
PACIFIC GAS AND ELECTRIC COMPANY
SAN FRANCISCO, CALIFORNIA

MICROFILM	
BILL OF MATL	
DWG LIST	
SUPSDS	
SUPSD BY	
SHEET NO.	of SHEETS
C-15-05	REV 2

N180B

11/03/2015, 11:28, G:\Graphics\ABR\TOPOCK-01\Submittal_100%\DWGs\C-Civil\C-15-01 thru 08.dwg, Tab: C-15-05

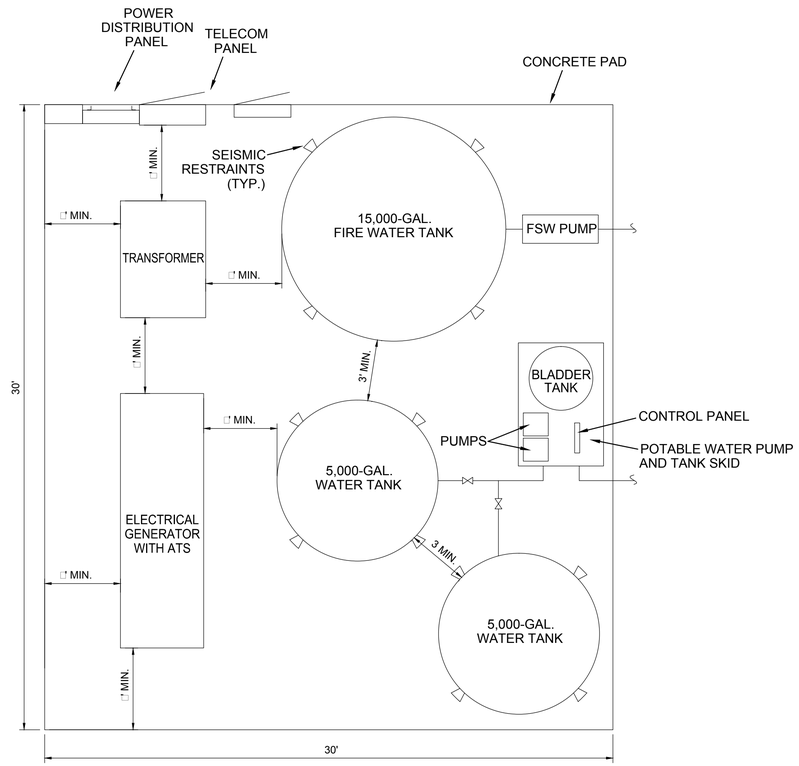

1 C-15-01 **UTILITY PAD LAYOUT**
1/□"=1'-0"

NOTES:
ATS - AUTOMATIC TRANSFER SWITCH
FSW - FIRE SUPPRESSION WATER

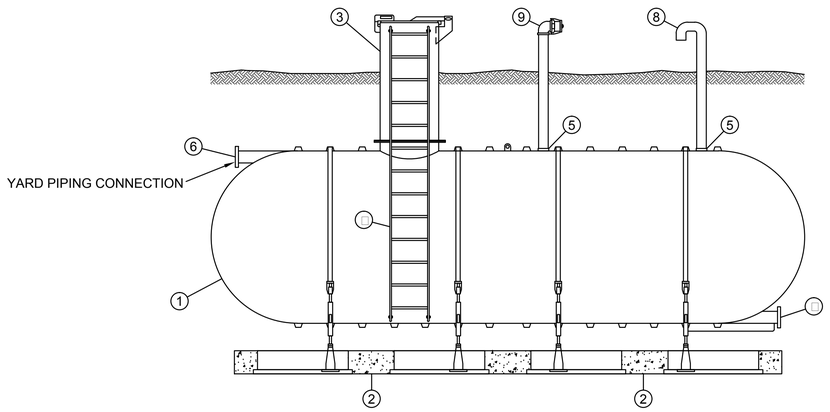

NO.	DESCRIPTION
1	FRP TANK
2	PRECAST DEADMAN SYSTEM W/ HOLD DOWN STRAP AND TURNBUCKLE TOP (UV PROTECTED)
3	30" MANWAY EXTENSION ACCESS WITH HINGED □ LOCKABLE TOP (UV PROTECTED)
□	NSF APPROVED FRP LADDER
5	□" NPT SERVICE FITTING
6	6" NSF APPROVED TANGENTIAL NO□□LE
□	6" NSF APPROVED TANGENTIAL FULL BOTTOM DRAIN NO□□LE
8	□" VENT PIPE WITH GOOSENECK AND BUG SCREEN
9	□" AUXILARY FILL W/CAM LOCK CONNECTION

NOTES:
1. TANKS WILL BE BURIED WITH A MINIMUM OF 12" OF BACKFILL ABOVE AND BENEATH THE TANK.
2. TANK SURFACE MUST BE BLOCKED FROM TRAFFIC CROSSING.
3. TANKS WILL BE ANCHORED USING A VENDOR-SUPPLIED ANCHORING SYSTEM.
□. CONTACTOR TO CONFIRM MANUFACTURER'S TANK INSTALLATION DETAILS.

2 C-15-01 **BURIED STORAGE TANK**
NO SCALE

TANK ID	TANK DIAMETER	TANK LENGTH
1,000-GAL. REMEDY PRODUCED WATER TANK	□'	11'-□½"
10,000-GAL. SEWAGE TANK	8'	31'-6½"

- FINAL DESIGN - FOR AGENCY APPROVAL ONLY

REGISTERED PROFESSIONAL ENGINEER
BENJAMIN J. WUERL
C 67811
EXP 6/30/17
STATE OF CALIFORNIA

ETIC ENGINEERING

ARCADIS

NO.	DATE	DESCRIPTION	GM/SPEC	DWN	CHKD	SUPV	APVD BY
2	11/18/15	FINAL DESIGN		AJW	WLM	BW	RAO
1	8/5/15	90% RTC RESOLUTION		AJW	KLD	WLM	BJW
0	2/2/15	SUPPLEMENTAL PRE-FINAL (90%) DESIGN		AJW	MSL	JPB	JEF

REVISIONS

APPROVED BY	
	SO
RAO	SUPV
	DSGN
	DWN
	CHKD
	OK
	DATE
	SCALES

TOPOCK GROUNDWATER REMEDIATION PROJECT

CONSTRUCTION HEADQUARTERS CIVIL DETAILS

GAS TRANSMISSION & DISTRIBUTION
PACIFIC GAS AND ELECTRIC COMPANY
SAN FRANCISCO, CALIFORNIA

MICROFILM	
BILL OF MATL	
DWG LIST	
SUPSDS	
SUPSD BY	
SHEET NO. of	SHEETS
C-15-06	REV 2

N1808

11/03/2015, 11:29, G:\Graphics\AR\TOPOCK-01\Submittal_100%\DWGs\C-Civil\C-15-01 thru 08.dwg, Tab: C-15-06

NOTE:
1. SEE SHEET E-15-03 FOR CONSTRUCTION HEADQUARTERS YARD AND CONDUIT SCHEDULE.

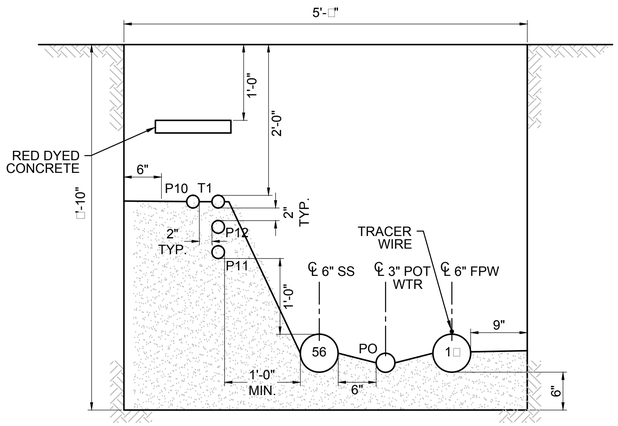

1 SECTION
1"=1'-0"
C-15-03
C-15-0□
E-15-01
F-15-01

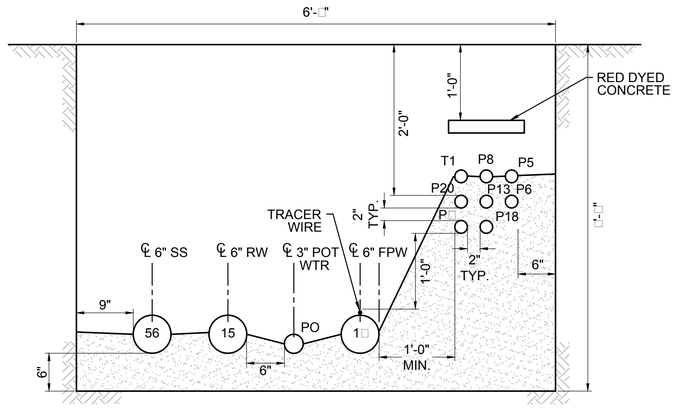

2 SECTION
1"=1'-0"
C-15-03
C-15-0□
E-15-01
F-15-01

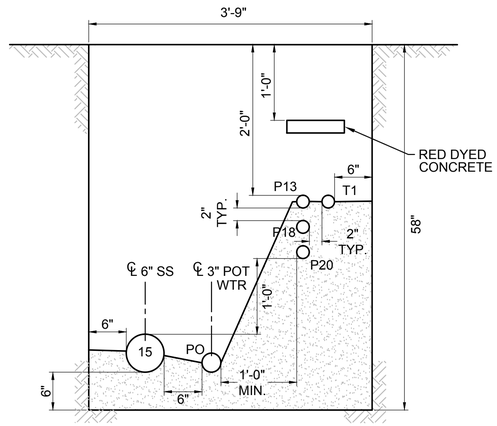

3 SECTION
1"=1'-0"
C-15-03
C-15-0□
E-15-01
F-15-01

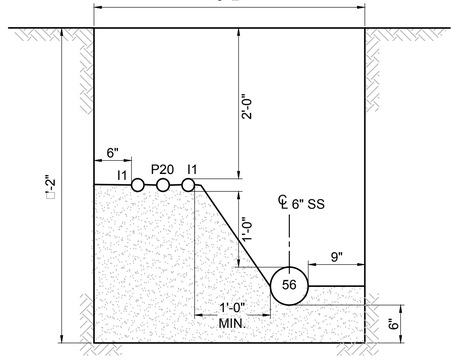

4 SECTION
1"=1'-0"
C-15-03
C-15-0□
E-15-01
F-15-01

- FINAL DESIGN - FOR AGENCY APPROVAL ONLY

REGISTERED PROFESSIONAL ENGINEER
BENJAMIN J. WUERL
C 67811
EXP 6/30/17
STATE OF CALIFORNIA

ETIC ENGINEERING

ARCADIS

NO.	DATE	DESCRIPTION	GM/SPEC	DWN	CHKD	SUPV	APVD BY
2	11/18/15	FINAL DESIGN		AJW	WLM	BW	RAO
1	8/5/15	90% RTC RESOLUTION		AJW	KLD	WLM	BJW
0	2/2/15	SUPPLEMENTAL PRE-FINAL (90%) DESIGN		AJW	MSL	JPB	JEF

REVISIONS

APPROVED BY	
RAO	SO
	SUPV
	DSGN
	DWN
	CHKD
	OK
	DATE
	SCALES

TOPOCK GROUNDWATER REMEDIATION PROJECT

CONSTRUCTION HEADQUARTERS TRENCH SECTIONS

GAS TRANSMISSION & DISTRIBUTION
PACIFIC GAS AND ELECTRIC COMPANY
SAN FRANCISCO, CALIFORNIA

MICROFILM	
BILL OF MATL	
DWG LIST	
SUPSDS	
SUPSD BY	
SHEET NO.	of SHEETS
C-15-07	REV 2

N1808

11/03/2015, 11:30, G:\Graphics\ART\TOPOCK-011\Submittal_100%\DWGs\C-Civil\C-15-01 thru 08.dwg, Tab: C-15-07

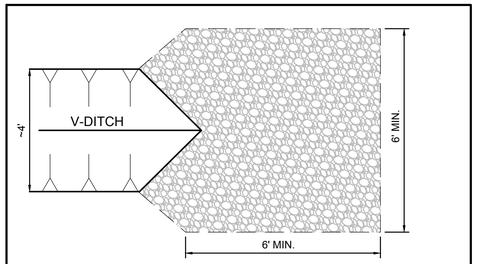

1 ENERGY DISSIPATOR DETAIL
NOT TO SCALE
C-07-08

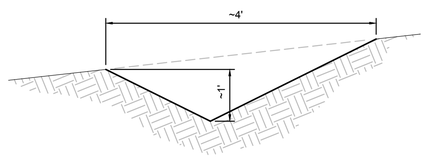

2 V-DITCH DETAIL
NOT TO SCALE
C-07-08

PRELIMINARY EARTHWORK VOLUMES
CONSTRUCTION HEADQUATERS

2d Area(Sq. Ft.)	Cut (Cu. Yd.)	Fill(Cu. Yd.)	Net(Cu. Yd.)
Total 114851.97	1558.33	2319.08	760.75 <Fill>

LEGEND:
EXISTING GRADE
ENGINEERED GRADE

N

1 C-15-08

2 C-15-08

1 C-15-09

510
515
520
525
530
535
540
545
550
555

0 25' 50' 75'
SCALE: 1"=25'

- FINAL DESIGN -
FOR AGENCY APPROVAL ONLY

REGISTERED PROFESSIONAL ENGINEER
BENJAMIN J. WUERL
C 67811
EXP 6/30/17
STATE OF CALIFORNIA

ETIC ENGINEERING

ARCADIS

NO.	DATE	DESCRIPTION	GM/SPEC	DWN	CHKD	SUPV	APVD BY
2	11/18/15	FINAL DESIGN		AJW	WLM	BW	RAO
1	8/5/15	90% RTC RESOLUTION		AJW	MSL	JPB	JEF
0	2/2/15	SUPPLEMENTAL PRE-FINAL (90%) DESIGN		AJW	MSL	JPB	JEF

REVISIONS

APPROVED BY	SO
	SUPV
RAO	DSGN
	DWN
	CHKD
	OK
	DATE
	SCALES

TOPOCK GROUNDWATER REMEDIATION PROJECT

CONSTRUCTION HEADQUARTERS GRADING PLAN

GAS TRANSMISSION & DISTRIBUTION
PACIFIC GAS AND ELECTRIC COMPANY
SAN FRANCISCO, CALIFORNIA

MICROFILM	
BILL OF MATL	
DWG LIST	
SUPSDS	
SUPSD BY	
SHEET NO.	of SHEETS
C-15-08	REV 2

N1808

11/03/2015, 13:52, G:\Graphics\AR\TOPOCK-01\Submittal_100%\DWGs\C-Civil\C-15-01 thru 08.dwg, Tab: C-15-08-GRADING

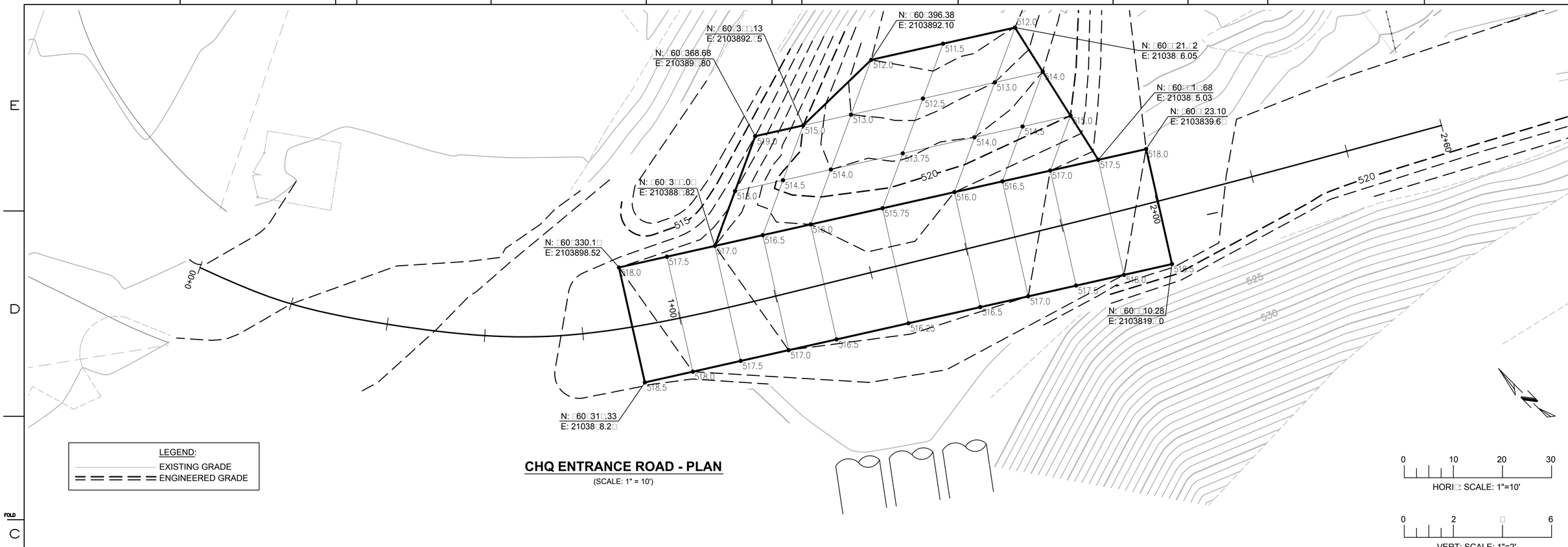

CHQ ENTRANCE ROAD - PLAN

(SCALE: 1" = 10')

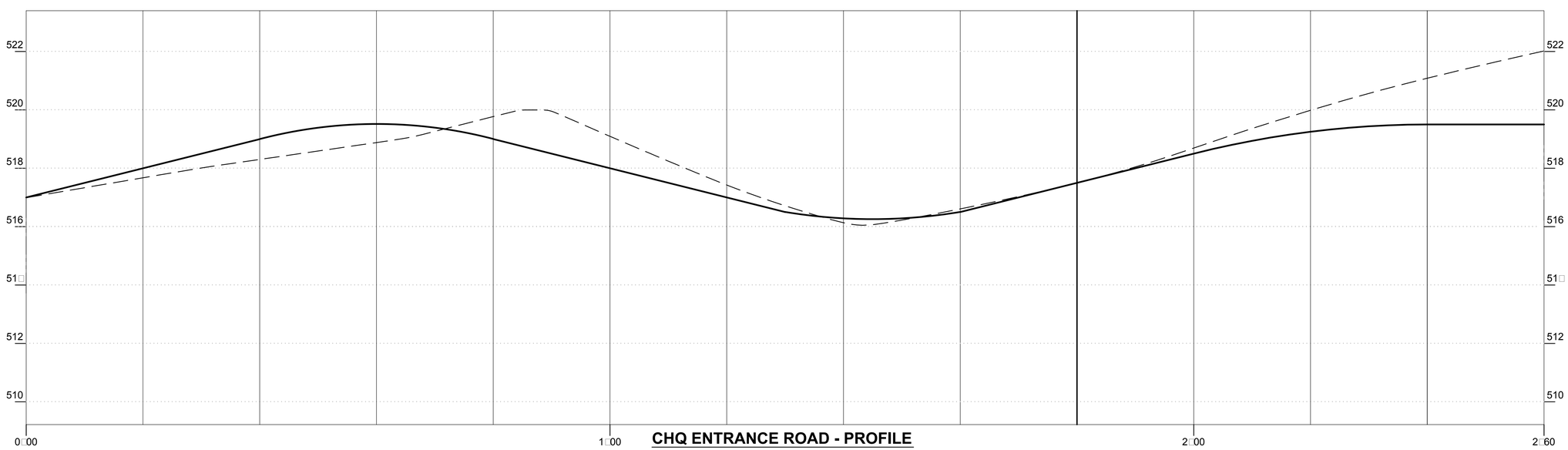

CHQ ENTRANCE ROAD - PROFILE

(SCALE: 1" = 10')

- FINAL DESIGN -
FOR AGENCY
APPROVAL ONLY

REGISTERED PROFESSIONAL ENGINEER
BENJAMIN J. WUERL
C 67811
EXP. 6/30/17
STATE OF CALIFORNIA

ETIC ENGINEERING

ARCADIS

NO.	DATE	DESCRIPTION	GM/SPEC	DWN	CHKD	SUPV	APVD BY
1	11/18/15	FINAL DESIGN		AJW	WLM	BW	RAO
0	8/5/15	90% RTC RESOLUTION		AJW	MSL	JPB	JEF

REVISIONS

APPROVED BY: RAO

SO
SUPV
DSGN
DWN
CHKD
OK
DATE
SCALES

TOPOCK GROUNDWATER REMEDIATION PROJECT

CHQ ENTRANCE ROAD-
PLAN AND PROFILE
STA 0+00 TO STA 2+34

GAS TRANSMISSION & DISTRIBUTION
PACIFIC GAS AND ELECTRIC COMPANY
SAN FRANCISCO, CALIFORNIA

MICROFILM
BILL OF MATL
DWG LIST
SUPSDS
SUPSD BY
SHEET NO. of SHEETS
C-15-09
REV 1

11/03/2015, 11:33, G:\Gr ARTOPOCK-01 S 100% DWG C-C C-15-09.d T C-15-09

N1808

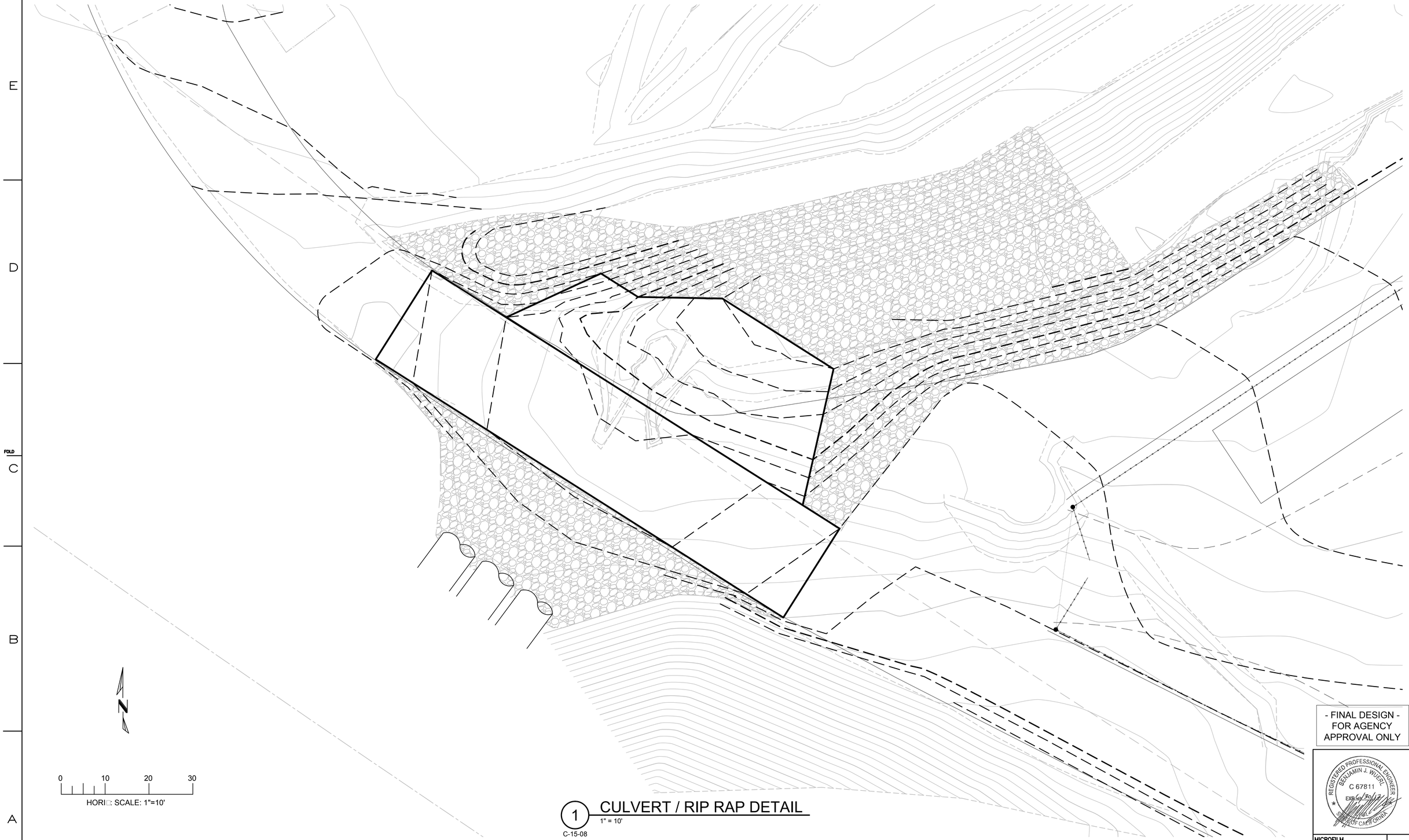

1 CULVERT / RIP RAP DETAIL
1" = 10'
C-15-08

- FINAL DESIGN -
FOR AGENCY
APPROVAL ONLY

REGISTERED PROFESSIONAL ENGINEER
BENJAMIN J. WUERL
C 67811
EXP. 6/30/17
STATE OF CALIFORNIA

ETIC ENGINEERING

ARCADIS

NO.	DATE	DESCRIPTION	GM/SPEC	DWN	CHKD	SUPV	APVD BY
1	11/18/15	FINAL DESIGN		AJW	WLM	BW	RAO
0	8/5/15	90% RTC RESOLUTION		AJW	MSL	JPB	JEF

REVISIONS

APPROVED BY	
RAO	SO
	SUPV
	DSGN
	DWN
	CHKD
	OK
	DATE
	SCALES

TOPOCK GROUNDWATER REMEDIATION PROJECT

CHQ ENTRANCE ROAD-
RIP RAP LAYOUT

GAS TRANSMISSION & DISTRIBUTION
PACIFIC GAS AND ELECTRIC COMPANY
SAN FRANCISCO, CALIFORNIA

MICROFILM
BILL OF MATL
DWG LIST
SUPSDS
SUPSD BY
SHEET NO. of SHEETS
C-15-11
REV 1

11/03/2015, 11:36, G:\Gr□□□□□□AR TOPOCK-01 S□□□□□□□100% DWG□C-C□□□C-15-11.d□□, T□□: C-15-11

N1808

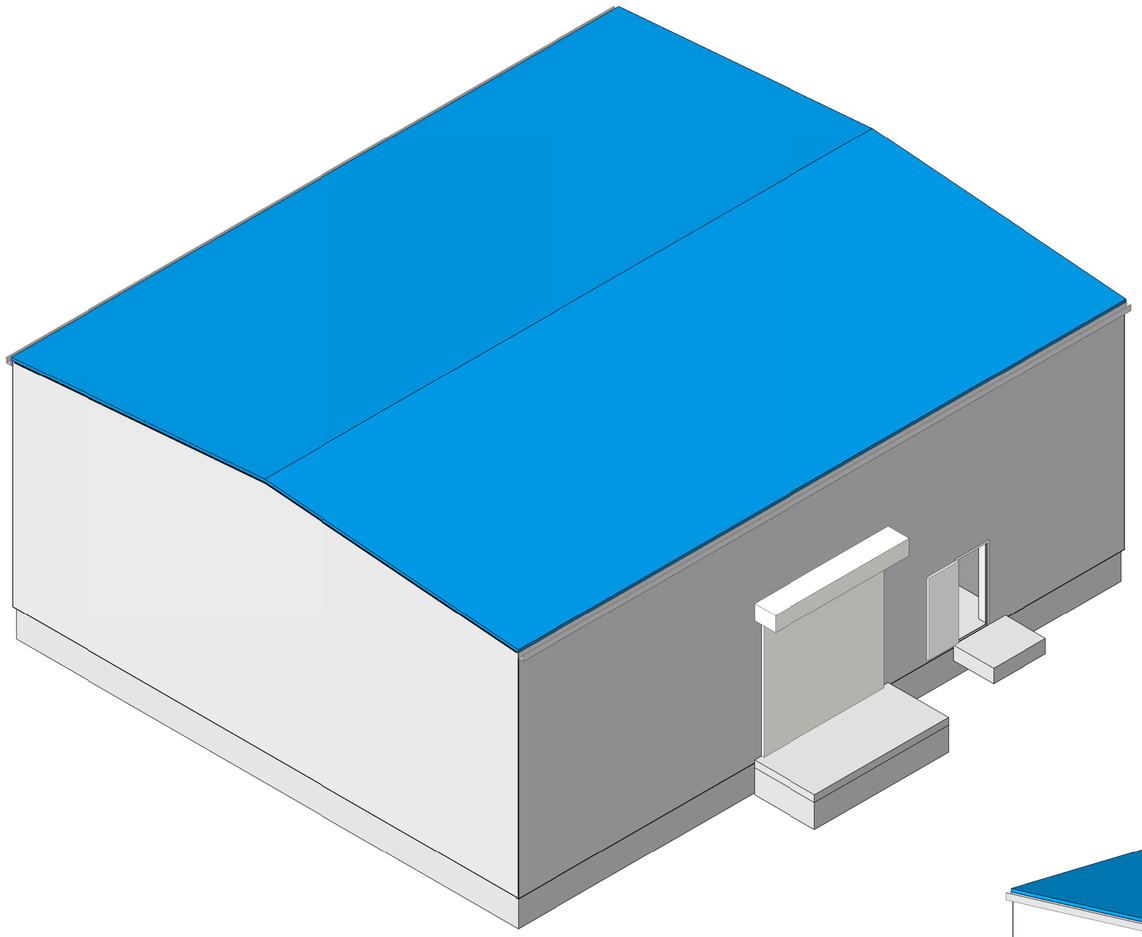

3D VIEW LOOKING NORTHEAST

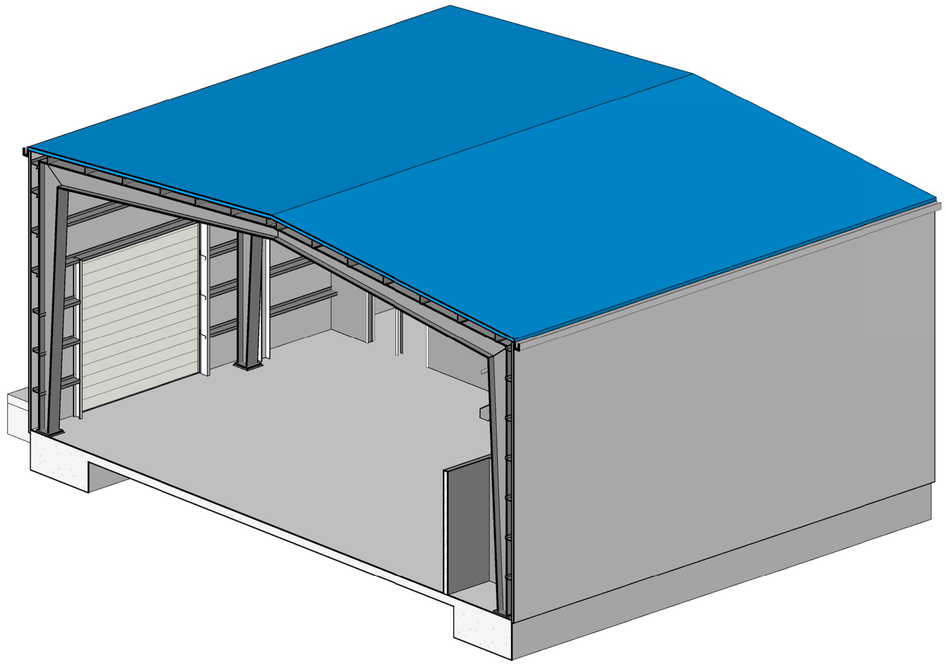

3D VIEW 2 LOOKING SOUTHWEST

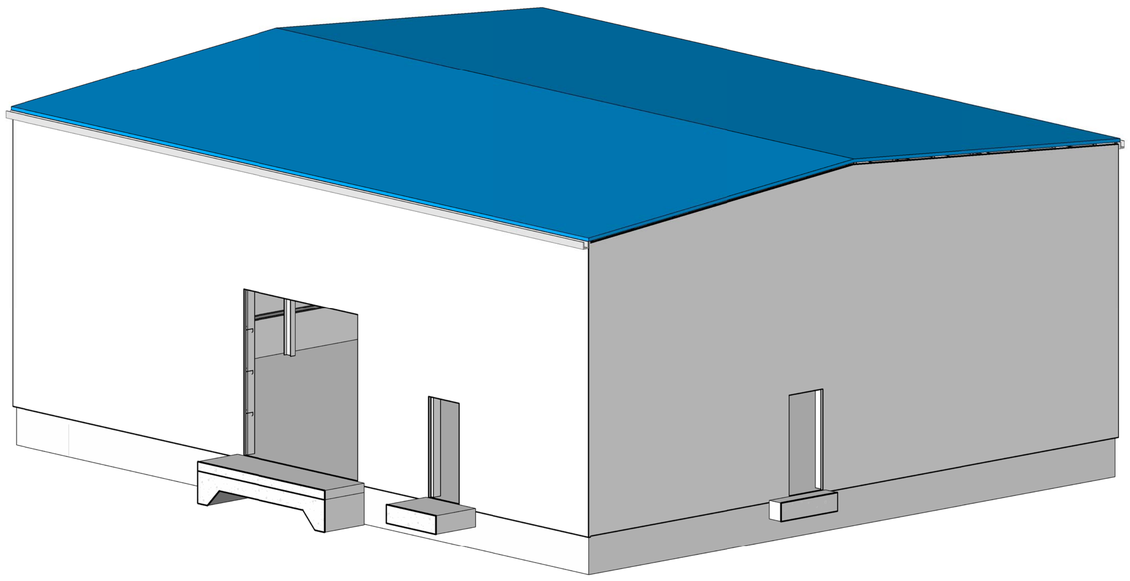

3D VIEW LOOKING NORTHWEST

- FINAL DESIGN - FOR AGENCY APPROVAL ONLY

REGISTERED PROFESSIONAL ENGINEER MATTHEW S. LOWCOCK C 81650 EXP. 9-30-17 CIVIL STATE OF CALIFORNIA

ARCADIS

No.	Date	DESCRIPTION	GM/SPEC	DWN	CHKD	SUPV	APVD BY
1	11/18/15	FINAL DESIGN		CMW	MSL	JPB	RAO
0	2/2/15	SUPPLEMENTAL PRE-FINAL (90%) DESIGN		CMW	MSL	JB	MSL

REVISIONS

APPROVED BY	
RAO	
SO	
SUPV	RAO
DSGN	MSL
DWN	CMW
CHKD	MSL
OK	RAO
DATE	11/18/15
SCALES	NONE or AS SHOWN

TOPOCK GROUNDWATER REMEDIATION PROJECT

WORKSHOP BUILDING AXONOMETRIC VIEWS

GAS TRANSMISSION & DISTRIBUTION
PACIFIC GAS AND ELECTRIC COMPANY
SAN FRANCISCO, CALIFORNIA

MICROFILM	
BILL OF MATL	
DWG LIST	
SUPSDS	
SUPSD BY	
SHEET NO.	of SHEETS
S-15-02	REV 1

10/29/2015 11:53:15 AM
C:\Users\cwarcata\Documents\Topock Workshop Building_Structural_10.7.15_cwarcata.rvt

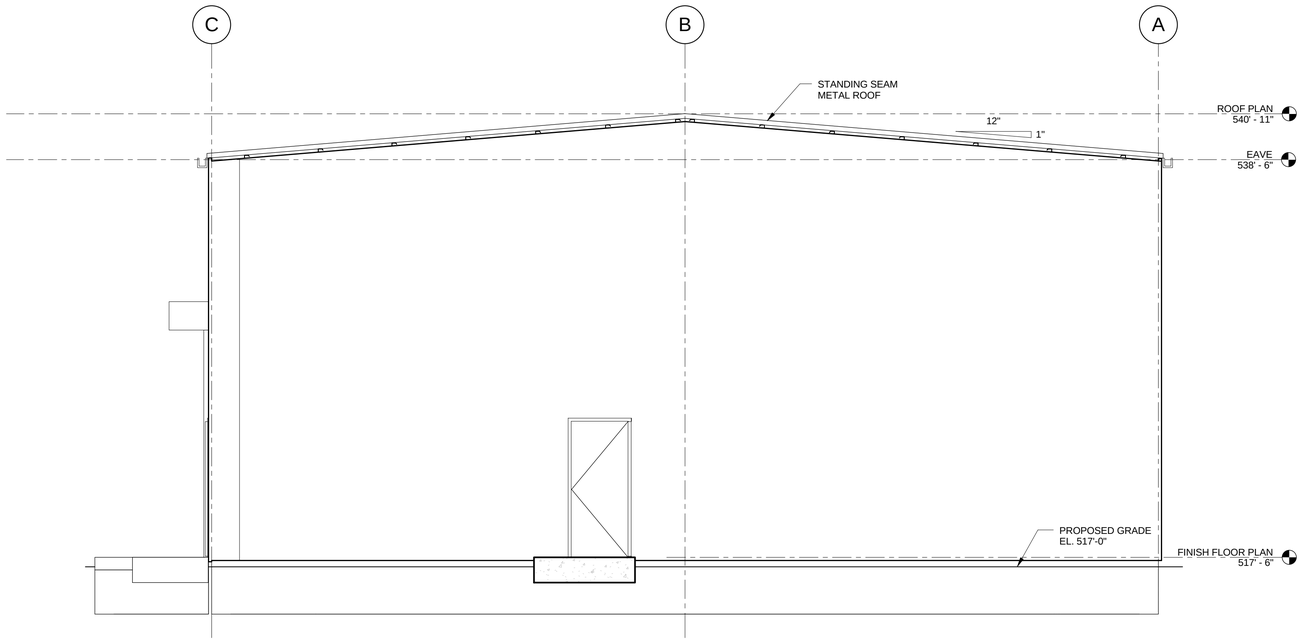

EAST ELEVATION
1/4" = 1'-0"

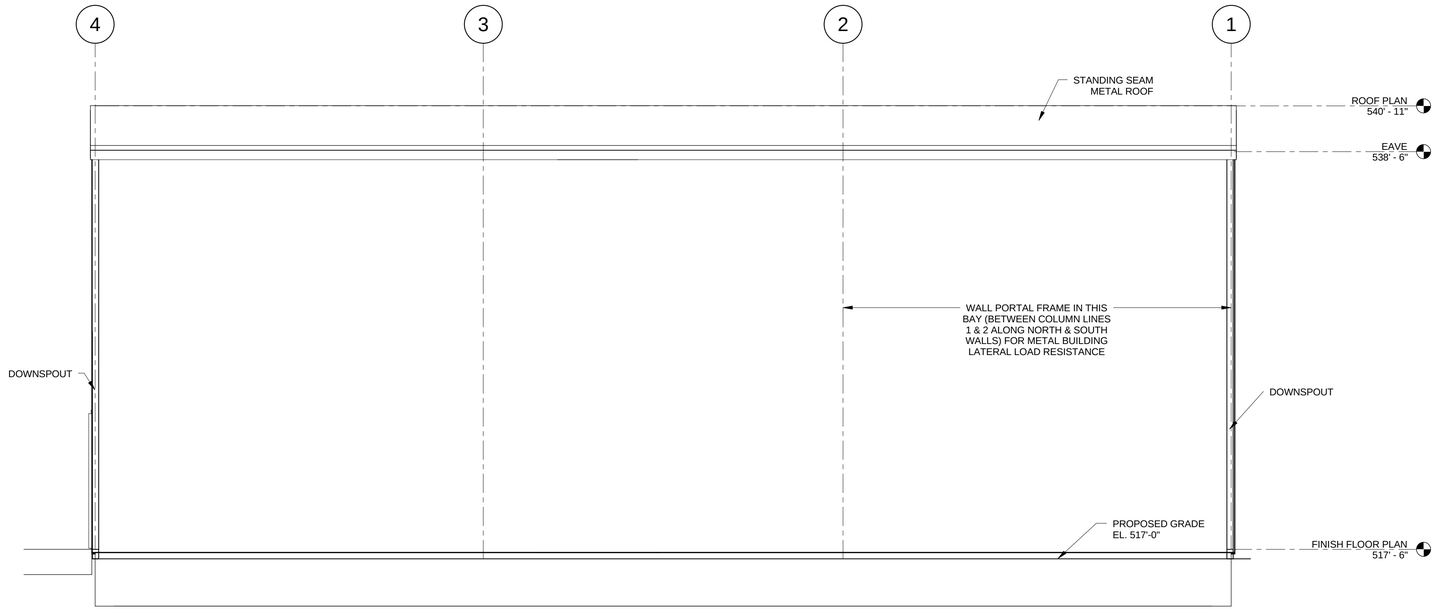

NORTH ELEVATION
1/4" = 1'-0"

BUILDING CODE NOTES:

1. CODE ITEMS

DESIGN CODES	2013 CALIFORNIA BUILDING CODE,
	2012 INTERNATIONAL BUILDING CODE
	2010 ASCE-7
BUILDING OCCUPANCY CLASSIFICATION	GROUP F-2
TYPE OF CONSTRUCTION	II-B
BUILDING AREA	3000 SF
BUILDING HEIGHT	1 STORY
FIRE SUPPRESSION SYSTEM	NONE

2. ALL FOUNDATIONS AND SLABS SHALL BEAR ON A 6 INCH MINIMUM THICKNESS OF GRANULAR BASE LEVELING COURSE MATERIAL. FOUNDATION DESIGN IS BASED ON 2,000 PSF ALLOWABLE BEARING PRESSURE IN CONFORMANCE WITH CBC TABLE 1806.2 FOR CLASSIFICATION(S) SW, SP, SM, SC, GM, AND/OR GC. A LICENSED GEOTECHNICAL ENGINEER SHALL INSPECT THE EXCAVATIONS AND CONFIRM THAT 2,000 PSF BEARING IS ALLOWED FOR THE FOUNDATIONS.

3. LIVE LOADING:
GRADE SLAB - 3 TON FORKLIFT (RATED CAPACITY) AND HS-20 TRAFFIC LOADS (NOT ACTING SIMULTANEOUSLY)
ROOF - 20 PSF
INTERIOR ROOM CEILINGS - 50 PSF

4. METAL BUILDING DESIGN CRITERIA:
THE METAL BUILDING MANUFACTURER SHALL DESIGN THE BUILDING FOR THE FOLLOWING LOADS, BASED ON THE 2013 CALIFORNIA BUILDING CODE AND ASCE 7-10:

ROOF LOADING:
ROOF COLLATERAL LOAD - 5 PSF.
MAX ROOF DEAD LOAD - 11.5 PSF. * (NOT INCLUDING ROOF COLLATERAL LOADS)
MIN ROOF DEAD LOAD - 4 PSF.
* MAXIMUM ROOF DEAD LOAD ASSUMES 5 PSF MAXIMUM DEAD LOAD FROM SOLAR PANEL & SOLAR PANEL SUPPORT FRAMING/HARDWARE/ ATTACHMENTS TO ROOF

ROOF LIVE LOADING

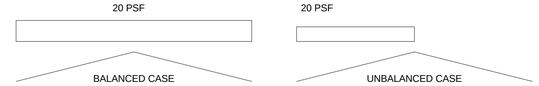

METAL BUILDING LOAD COORDINATION - METAL BUILDING MANUFACTURER MUST COORDINATE SOLAR EQUIPMENT AND BRIDGE CRANE LOADS WITH SOLAR EQUIPMENT MANUFACTURER AND BRIDGE CRANE MANUFACTURER

WIND LOADING:
BASIC WIND SPEED (3 SECOND GUST) V=110 MPH - ULTIMATE, OR MINIMUM NET WIND PRESSURE, Pnet = 20 PSF WHICHEVER IS GREATER
WIND IMPORTANCE FACTOR - Iw = 1.0
RISK CATEGORY II.
WIND EXPOSURE C.
ENCLOSURE - PARTIALLY ENCLOSED.
INTERNAL PRESSURE COEFFICIENT - ±0.55.
ALL COMPONENTS AND CLADDING SHALL BE DESIGNED FOR THE CONDITIONS OF INTERNAL AND EXTERNAL PRESSURES.

SEISMIC CRITERIA:
SEISMIC IMPORTANCE FACTOR - Ie=1.0.
RISK CATEGORY II.
DESIGN CATEGORY - C
SITE CLASS - D
MAPPED SPECTRAL RESPONSE ACCELERATIONS - Ss=0.230, S1=0.120.
SPECTRAL RESPONSE COEFFICIENTS - Sds=0.245, Sd1=0.188.
SEISMIC FORCE RESISTING SYSTEM:
ORDINARY STEEL MOMENT FRAMES
Cs=7.0%, R=3.5, BASE SHEAR: V=10 KIPS (TO BE VERIFIED BY METAL BUILDING MFR)
ANALYSIS PROCEDURE - EQUIVALENT LATERAL FORCE.

FOUNDATIONS:
THE INTERIOR BUILDING FRAME (ALONG COLUMN LINE 2 AND 3) COLUMN FOUNDATIONS HAVE BEEN DESIGNED FOR THE FOLLOWING MAXIMUM SERVICE LOAD REACTIONS. THE METAL BUILDING MANUFACTURER SHALL PROPORTION THE BUILDING SUCH THAT THE ACTUAL REACTIONS DO NOT EXCEED THOSE LISTED. IF THE FINAL REACTIONS EXCEED THOSE LISTED, THE CONTRACTOR SHALL BEAR THE COST OF RE-DESIGNING THE FOUNDATIONS TO THE SATISFACTION OF THE ENGINEER, AT NO ADDITIONAL COST TO THE OWNER.

30.2 KIPS DOWNWARD
6.1 KIPS EAST-WEST SHEAR
13.8 KIPS NORTH-SOUTH SHEAR
5.2 KIPS NET UPLIFT
* THE EXTERIOR BUILDING FRAME (ALONG COLUMN LINES 1 AND 4) COLUMN FOUNDATIONS HAVE BEEN DESIGNED FOR 60% DOWNWARD AND UPLIFT REACTIONS LISTED ABOVE FOR INTERIOR BUILDING FRAME COLUMN FOUNDATIONS.

- FINAL DESIGN -
FOR AGENCY
APPROVAL ONLY



ARCADIS

No.	Date	DESCRIPTION	GM/SPEC	DWN	CHKD	SUPV	APVD BY
1	11/18/15	FINAL DESIGN		CMW	MSL	JPB	RAO
0	2/2/15	SUPPLEMENTAL PRE-FINAL (90%) DESIGN		CMW	MSL	JB	MSL

REVISIONS

APPROVED BY	
RAO	
SO	
SUPV	RAO
DSGN	MSL
DWN	CMW
CHKD	MSL
OK	RAO
DATE	11/18/15
SCALES	NONE or AS SHOWN

TOPOCK GROUNDWATER REMEDIATION PROJECT

WORKSHOP BUILDING ELEVATIONS (1 OF 2)

GAS TRANSMISSION & DISTRIBUTION
PACIFIC GAS AND ELECTRIC COMPANY
SAN FRANCISCO, CALIFORNIA

MICROFILM	
BILL OF MATL	
DWG LIST	
SUPSDS	
SUPSD BY	
SHEET NO.	of SHEETS
S-15-03	REV 1

10/29/2015 11:53:19 AM
C:\Users\cwarcata\Documents\Topok Workshop Building_Structural_10.7.15_cwarcata.rvt

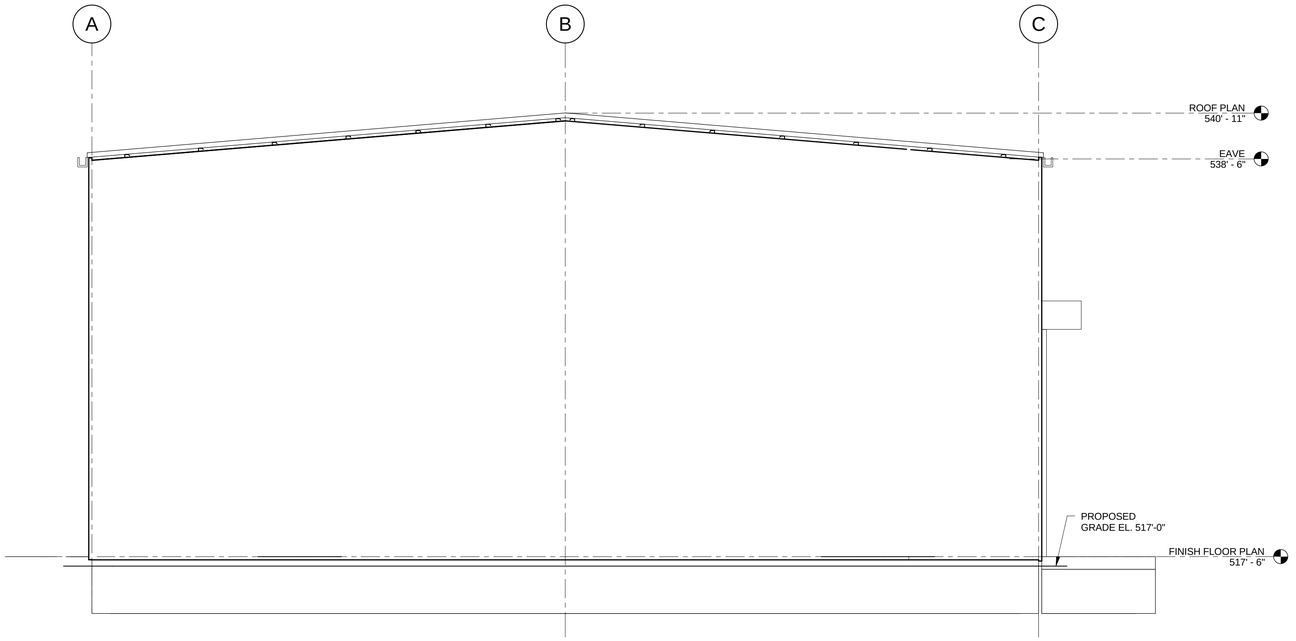

WEST ELEVATION
1/4" = 1'-0"

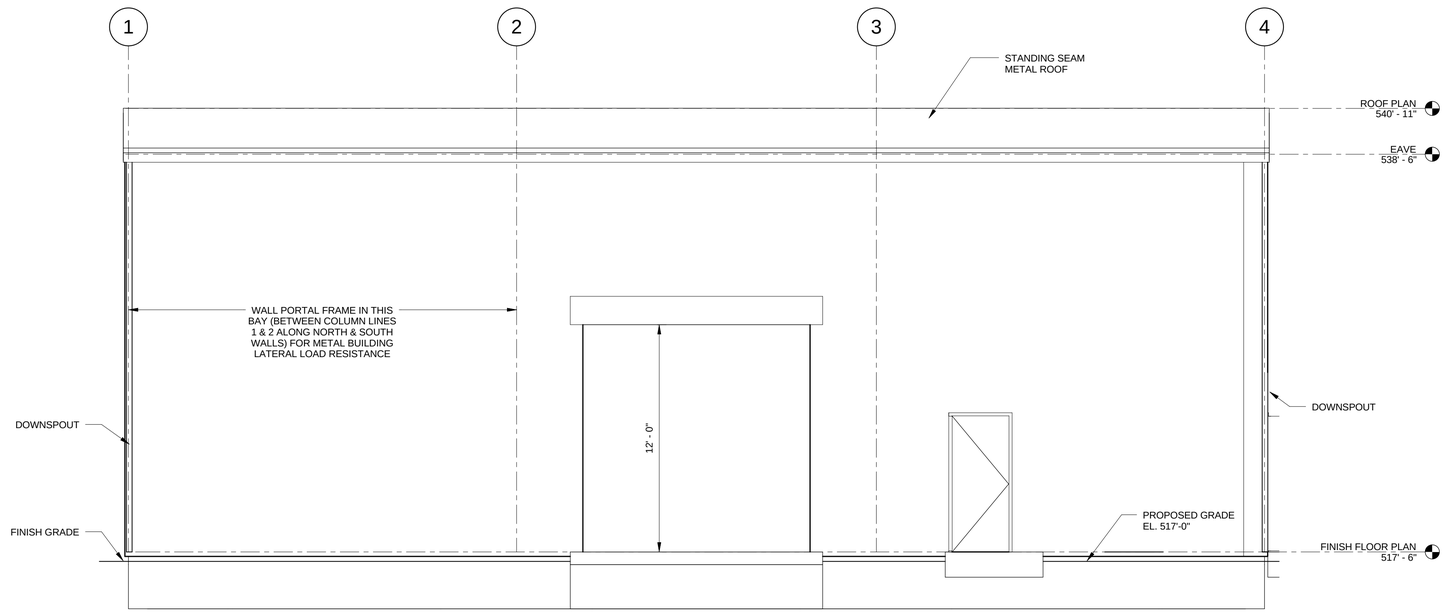

SOUTH ELEVATION
1/4" = 1'-0"

- FINAL DESIGN -
FOR AGENCY
APPROVAL ONLY

REGISTERED PROFESSIONAL ENGINEER
MATTHEW S. LOWE
C61650
EXP. 9-30-17
CIVIL
STATE OF CALIFORNIA

ARCADIS

No.	Date	DESCRIPTION	GM/SPEC	DWN	CHKD	SUPV	APVD BY
1	11/18/15	FINAL DESIGN		CMW	MSL	JPB	RAO
0	2/2/15	SUPPLEMENTAL PRE-FINAL (90%) DESIGN		CMW	MSL	JB	MSL

REVISIONS

APPROVED BY	
RAO	SO
	SUPV RAO
	DSGN MSL
	DWN CMW
	CHKD MSL
	OK RAO
	DATE 11/18/15
	SCALES NONE or AS SHOWN

TOPOCK GROUNDWATER REMEDIATION PROJECT

WORKSHOP BUILDING ELEVATIONS (2 OF 2)

GAS TRANSMISSION & DISTRIBUTION
PACIFIC GAS AND ELECTRIC COMPANY
SAN FRANCISCO, CALIFORNIA

MICROFILM	
BILL OF MATL	
DWG LIST	
SUPSDS	
SUPSD BY	
SHEET NO.	of SHEETS
S-15-04	REV 1

10/29/2015 11:53:26 AM
C:\Users\cwarcata\Documents\Topock Workshop Building_Structural_10.7.15_cwarcata.rvt

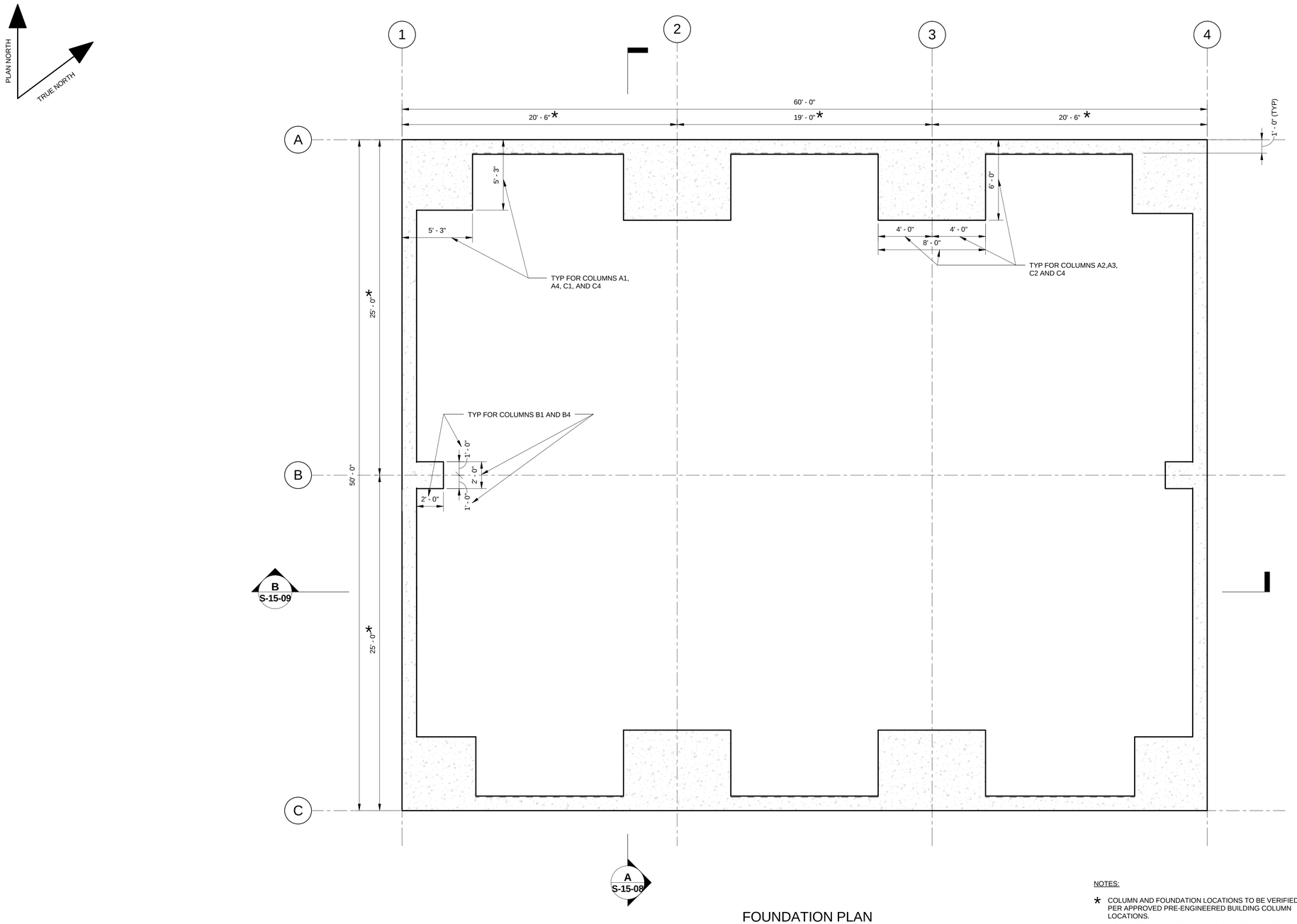

FOUNDATION PLAN
1/4" = 1'-0"

NOTES:

* COLUMN AND FOUNDATION LOCATIONS TO BE VERIFIED PER APPROVED PRE-ENGINEERED BUILDING COLUMN LOCATIONS.

1. P.E. SIGNED & SEALED BUILDING SHOP DRAWINGS AND DETAILED DESIGN CALCULATIONS ARE TO BE COMPLETED, SUBMITTED AND APPROVED BY THE ENGINEER OF RECORD PRIOR TO PLACEMENT OF FOUNDATION CONCRETE.

- FINAL DESIGN - FOR AGENCY APPROVAL ONLY

REGISTERED PROFESSIONAL ENGINEER
MATTHEW S. LOWE
No. C61650
EXP. 9-30-17
CIVIL
STATE OF CALIFORNIA

ARCADIS

No.	Date	DESCRIPTION	GM/SPEC	DWN	CHKD	SUPV	APVD BY
1	11/18/15	FINAL DESIGN	CMW	MSL	JPB	RAO	
0	2/2/15	SUPPLEMENTAL PRE-FINAL (90%) DESIGN	CMW	MSL	JB	MSL	

REVISIONS

APPROVED BY	
RAO	
SO	
SUPV	RAO
DSGN	MSL
DWN	CMW
CHKD	MSL
OK	RAO
DATE	11/18/15
SCALES	NONE or AS SHOWN

TOPOCK GROUNDWATER REMEDIATION PROJECT

WORKSHOP BUILDING FOUNDATION PLAN

GAS TRANSMISSION & DISTRIBUTION
PACIFIC GAS AND ELECTRIC COMPANY
SAN FRANCISCO, CALIFORNIA

MICROFILM	
BILL OF MATL	
DWG LIST	
SUPSDS	
SUPSD BY	
SHEET NO.	of SHEETS
S-15-05	REV 1

10/29/2015 11:53:28 AM
C:\Users\cwarcata\Documents\Topok Workshop Building_Structural_10.7.15_cwarcata.rvt

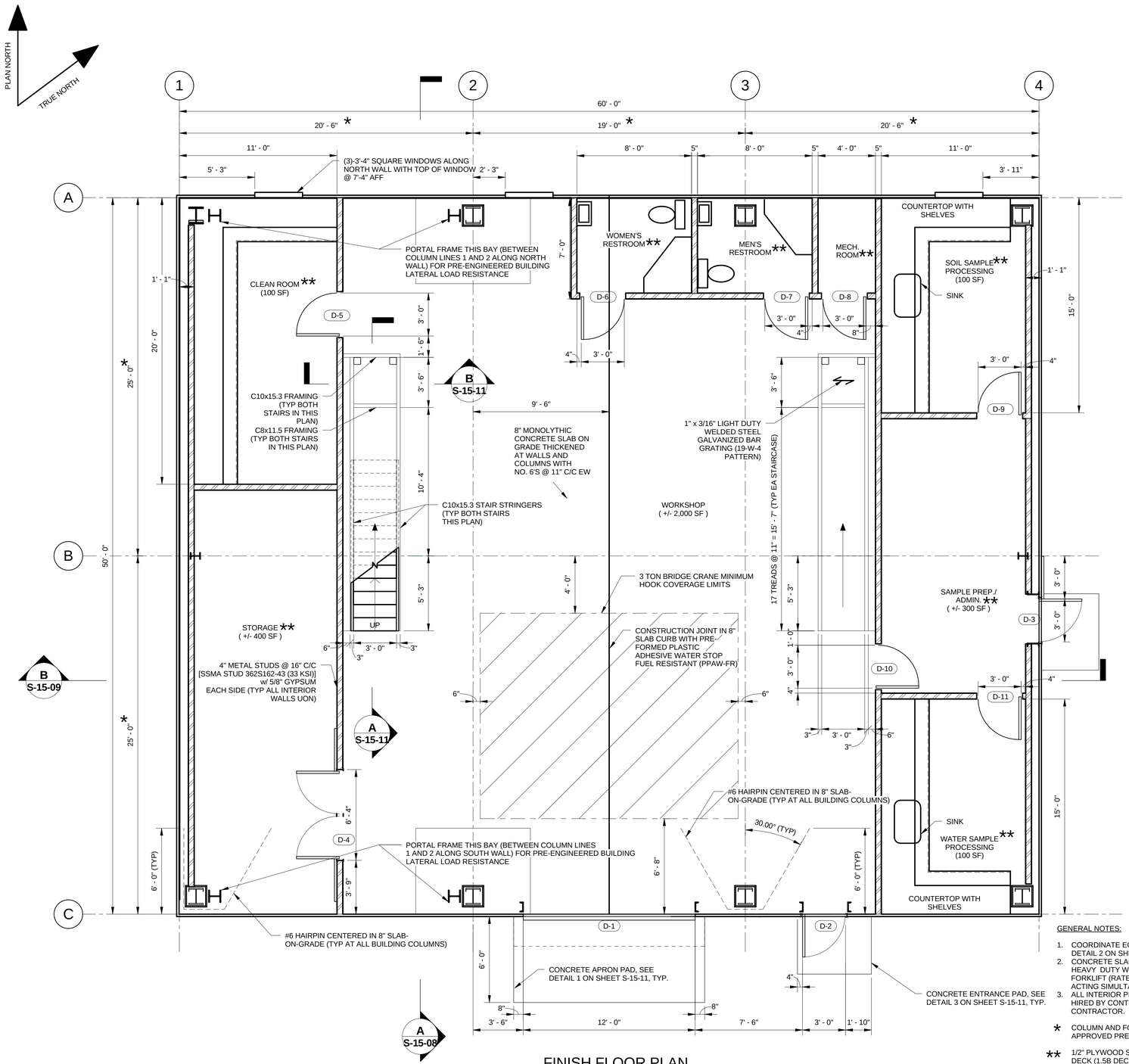

FINISH FLOOR PLAN
1/4" = 1'-0"

METAL DECK (FOR INTERIOR ROOM CEILING) NOTES:

TYPE	DEPTH (IN)	PANEL WIDTH (IN)	DESIGN THICKNESS (IN)	MIN. YIELD STREIGNTH Fy (KSI)	MIN. (+) S (IN3/FT)	MIN. (+) I (IN4/FT)	MIN. DIAPHRAGM SHEAR CAPACITY (LBS/FT)	FINISH
ROOF DECK	1-1/2	36	0.0295	33 (ASTM A653)	0.186	0.155	280	GALVANIZED*

* GALVANIZING SHALL CONFORM TO ASTM A924 WITH COATING CLASS OF G90 AS DEFINED IN ASTM A623.

1. DECK UNIT ANCHORAGE TO STEEL SUPPORTING MEMBERS UTILIZING ARC SPOT PUDDLE WELDS OR MECHANICAL FASTENERS BASED ON THE FOLLOWING MIMINUMS:
   A. ARC SPOT WELDS SHALL BE 5/8" MINIMUM VISIBLE DIAMETER OR
   B. #12 TEKS (SELF-DRILLING FASTENERS BY ITW BUILDEX) WITH THE ATTACHMENT PATTERN OF 36/5
2. MINIMUM SIDE LAP ATTACHMENT SHALL BE 4 FASTENERS PER SPAN AND SHALL BE ARC SPOT PUDDLE WELDS OR MECHANICAL FASTENERS:
   A. ARC SPOT PUDDLE WELDS SHALL BE 5/8" MINIMUM VISIBLE DIAMETER OR
   B. #10 TEK SCREW
3. MINIMUM EDGE ATTACHMENT SHALL BE 6" AND SHALL BE 5/8" MINIMUM VISIBLE DIAMETER.
4. DECKING SHALL BE INSTALLED CONTINUOUS OVER A MINIMUM OF 3 SPANS.
5. ALL STRUCTURAL STEEL AND METAL DECK TO BE PRIMED PROPERLY AND FINISH PAINTED PER SPECIFICATION 09 90 00.

COLD-FORMED METAL NOTES:

METAL STUDS FOR INTERIOR ROOM CEILING JOISTS:

1. USE SSMA STUD 600S162-54 (50 KSI) STUDS AT 16" C/C FOR CEILING JOISTS.
2. PROVIDE MINIMUM 3-1/2" BEARING AT EACH END ON METAL STUD WALL BELOW.
3. JOISTS MUST BE BRACED AGAINST ROTATION AT ALL SUPPORTS BY TRACK, BLOCKING, OR SILL PLATE.
4. 1 ROW OF CEILING JOIST BRIDGING IS REQUIRED AT MID-SPAN OF JOISTS.
5. ALIGN CEILING JOISTS TO BEAR DIRECTLY ABOVE METAL STUDS IN WALL.
6. FOLLOW SSMA STANDARD GUIDELINES AND REQUIREMENTS FOR CEILING JOIST INSTALLATION, BRACING, AND ANCHORAGE.

METAL STUDS FOR INTERIOR ROOM WALLS:

1. USE SSMA STUD 362S162-43 (33 KSI) STUDS AT 16" C/C FOR WALLS.
2. WEAK AXIS AND TORSIONAL BRIDGING (BRACING) REQUIRED AT 4'-0" C.C SPACING UP HEIGHT OF WALL.
3. DOOR AND WINDOW WALL HEADERS TO BE SIZED BY METAL STUD WALL MANUFACTURER.
4. ALIGN CEILING JOISTS TO BEAR DIRECTLY ABOVE METAL STUDS IN WALL.
5. FOLLOW SSMA STANDARD GUIDELINES AND REQUIREMENTS FOR WALL INSTALLATION, BRACING, AND ANCHORAGE.

GENERAL NOTES:

1. COORDINATE EQUIPMENT PADS WITH MECHANICAL DRAWINGS. SEE DETAIL 2 ON SHEET S-15-12 FOR CONSTRUCTION REQUIREMENTS.
2. CONCRETE SLAB-ON-GRADE IN BUILDING, CONCRETE RAMPS, AND HEAVY DUTY WELDED STEEL BAR GRATING IS DESIGNED FOR 3 TON FORKLIFT (RATED CAPACITY) AND HS-20 TRAFFIC LOADS (LOADS NOT ACTING SIMULTANEOUSLY).
3. ALL INTERIOR PIPE SUPPORTS TO BE DESIGNED BY CALIFORNIA P.E. HIRED BY CONTRACTOR AND PIPE SUPPORTS TO BE PORVIDED BY CONTRACTOR.

* COLUMN AND FOUNDATION LOCATIONS TO BE VERIFIED PER APPROVED PRE-ENGINEERED BUILDING COLUMN LOCATIONS.

** 1/2" PLYWOOD SHEATHING FASTENED TO TOP OF METAL ROOF DECK (1.5B DECK 22 GA) w/ 6" METAL STUD JOISTS AT 16" C/C (TYP ALL INTERIOR ROOMS) (MAX LIVE LOAD RATING = 50 PSF)

- FINAL DESIGN - FOR AGENCY APPROVAL ONLY

REGISTERED PROFESSIONAL ENGINEER MATTHEW S. LOWRY C 71650 EXP. 9-30-17 CIVIL STATE OF CALIFORNIA

ARCADIS

No.	Date	DESCRIPTION	GM/SPEC	DWN	CHKD	SUPV	APVD BY
1	11/18/15	FINAL DESIGN		CMW	MSL	JPB	RAO
0	2/2/15	SUPPLEMENTAL PRE-FINAL (90%) DESIGN		CMW	MSL	JB	MSL

REVISIONS

APPROVED BY RAO

SO	
SUPV	RAO
DSGN	MSL
DWN	CMW
CHKD	MSL
OK	RAO
DATE	11/18/15
SCALES	NONE or AS SHOWN

TOPOCK GROUNDWATER REMEDIATION PROJECT

WORKSHOP BUILDING FINISH FLOOR PLAN

GAS TRANSMISSION & DISTRIBUTION
PACIFIC GAS AND ELECTRIC COMPANY
SAN FRANCISCO, CALIFORNIA

MICROFILM	
BILL OF MATL	
DWG LIST	
SUPSDS	
SUPSD BY	
SHEET NO.	of SHEETS
S-15-06	REV 1

10/29/2015 11:53:32 AM
C:\Users\cwancata\Documents\Topok Workshop Building_Structural_10.7.15_cwancata.rvt

PHOTOVOLTAIC (PV) SOLAR PANEL NOTES:

1. PV SOLAR PANEL UNITS ARE TO BE PROVIDED ON TOP OF THE METAL ROOF DECK OF THE WORKSHOP BUILDING. THE PV SOLAR PANEL UNIT MANUFACTURER IS RESPONSIBLE FOR THE FOLLOWING:
   - A. THE PV SOLAR PANEL UNIT MANUFACTURER IS RESPONSIBLE FOR PROVIDING AND DESIGNING ALL ITEMS (PV SOLAR PANELS/PANEL SUPPORT FRAMING/ROOF CLIPS (ATTACHING TO METAL ROOF DECK)/HARDWARE/ ETC.). THIS INCLUDES THE STRUCTURAL FRAMING AND HARDWARE ATTACHING TO THE BACK OF THE PV SOLAR PANELS AND SPANNING TO EACH ROOF CLIP (ATTACHING TO METAL ROOF DECK), THE CONNECTION OF THE PV SOLAR PANEL UNIT FRAMING TO THE ROOF CLIP (ATTACHING TO METAL ROOF DECK), AND THE ROOF CLIP AND ITS BOLTED/WELDED CONNECTION TO THE METAL DECK ROOF ITSELF.
   - B. THE PV SOLAR PANEL UNIT MANUFACTURER MUST PROVIDE THE FOLLOWING:
     1. SUBMIT P.E. (REGISTERED IN THE STATE OF CALIFORNIA) SIGNED AND SEALED DETAILS/DESIGN CALCULATIONS/DESIGN LOADS/ (DEAD/LIVE/SEISMIC/WIND LOADS) ACTING ON THE PV SOLAR PANEL UNITS, PANEL SUPPORT FRAMING, ROOF CLIPS AND ITS BOLTED/WELDED CONNECTION TO THE METAL ROOF DECK, AND HARDWARE.

* COLUMN AND FOUNDATION LOCATIONS TO BE VERIED PER APPROVED PRE-ENGINEERED BUILDING COLUMN LOCATIONS.

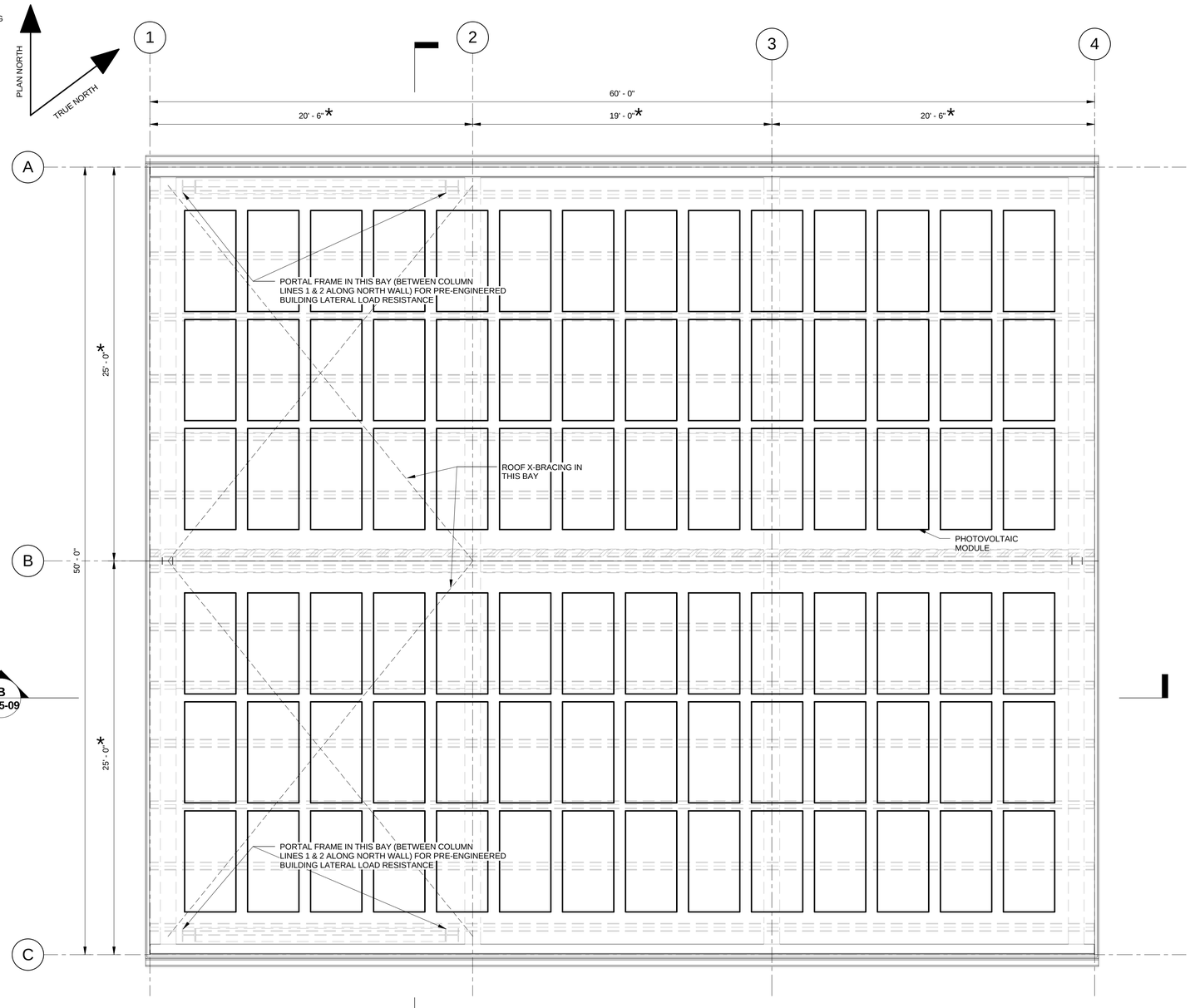

ROOF PLAN
1/4" = 1'-0"

NOTES:

1. NORTH SIDE PHOTOVOLTAICS MOUNTED AT 10 DEGREE TILT TOWARD SOUTH.

* COLUMN AND FOUNDATION LOCATIONS TO BE VERIFIED PER APPROVED PRE-ENGINEERED BUILDING COLUMN LOCATIONS.

- FINAL DESIGN - FOR AGENCY APPROVAL ONLY

REGISTERED PROFESSIONAL ENGINEER
MATTHEW S. LOWE
C61650
EXP. 9-30-17
CIVIL
STATE OF CALIFORNIA

ARCADIS

No.	Date	DESCRIPTION	GM/SPEC	DWN	CHKD	SUPV	APVD BY
1	11/18/15	FINAL DESIGN		CMW	MSL	JPB	RAO
0	2/2/15	SUPPLEMENTAL PRE-FINAL (90%) DESIGN		CMW	MSL	JB	MSL

REVISIONS

APPROVED BY	RAO
SO	
SUPV	RAO
DSGN	MSL
DWN	CMW
CHKD	MSL
OK	RAO
DATE	11/18/15
SCALES	NONE or AS SHOWN

TOPOCK GROUNDWATER REMEDIATION PROJECT

WORKSHOP BUILDING ROOF PLAN

GAS TRANSMISSION & DISTRIBUTION
PACIFIC GAS AND ELECTRIC COMPANY
SAN FRANCISCO, CALIFORNIA

MICROFILM	
BILL OF MATL	
DWG LIST	
SUPSDS	
SUPSD BY	
SHEET NO.	of SHEETS
S-15-07	REV 1

10/29/2015 11:53:35 AM
C:\Users\cvarcata\Documents\Topok Workshop Building_Structural_10.7.15_cvarcata.rvt

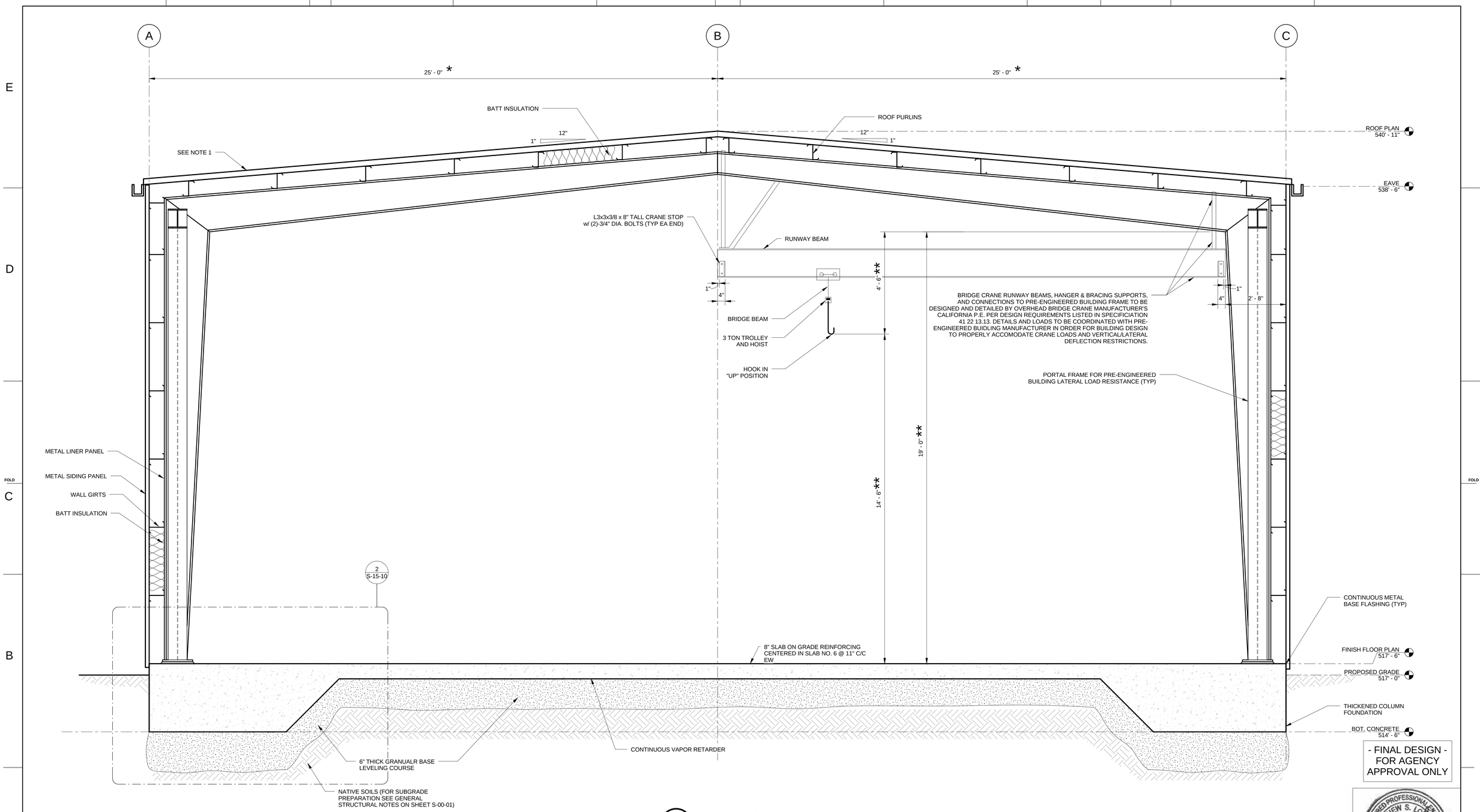

A TYPICAL INTERIOR FRAME

1/2" = 1'-0"

NOTES:

1. PHOTOVOLTAIC MODULES NOT SHOW FOR CLARITY.

* COLUMN AND FOUNDATION LOCATIONS TO BE VERIFIED PER APPROVED PRE-EINGEERED BUILDING COLUMN LOCATIONS.

** HEIGHT FROM TOP OF FLOOR TO BOTTOM OF FRAME RAFTER BEAM TO BE VERIFIED TO ACHIEVE MINIMUM 14'-6" HOOK CLEARANCE HEIGHT FROM FLOOR

- FINAL DESIGN - FOR AGENCY APPROVAL ONLY



ARCADIS

No.	Date	DESCRIPTION	GM/SPEC	DWN	CHKD	SUPV	APVD BY
1	11/18/15	FINAL DESIGN	CMW	MSL	JPB	RAO	
0	2/2/15	SUPPLEMENTAL PRE-FINAL (90%) DESIGN	CMW	MSL	JB	MSL	

REVISIONS

APPROVED BY	RAO
SO	
SUPV	RAO
DSGN	MSL
DWN	CMW
CHKD	MSL
OK	RAO
DATE	11/18/15
SCALES	NONE or AS SHOWN

TOPOCK GROUNDWATER REMEDIATION PROJECT

WORKSHOP BUILDING SECTION-TYPICAL FRAME

GAS TRANSMISSION & DISTRIBUTION
PACIFIC GAS AND ELECTRIC COMPANY
SAN FRANCISCO, CALIFORNIA

MICROFILM	
BILL OF MATL	
DWG LIST	
SUPSDS	
SUPSD BY	
SHEET NO.	of SHEETS
S-15-08	REV 1

10/29/2015 11:52:38 AM
C:\Users\cvancata\Documents\Topock Workshop Building_Structural_10.7.15_cvancata.rvt

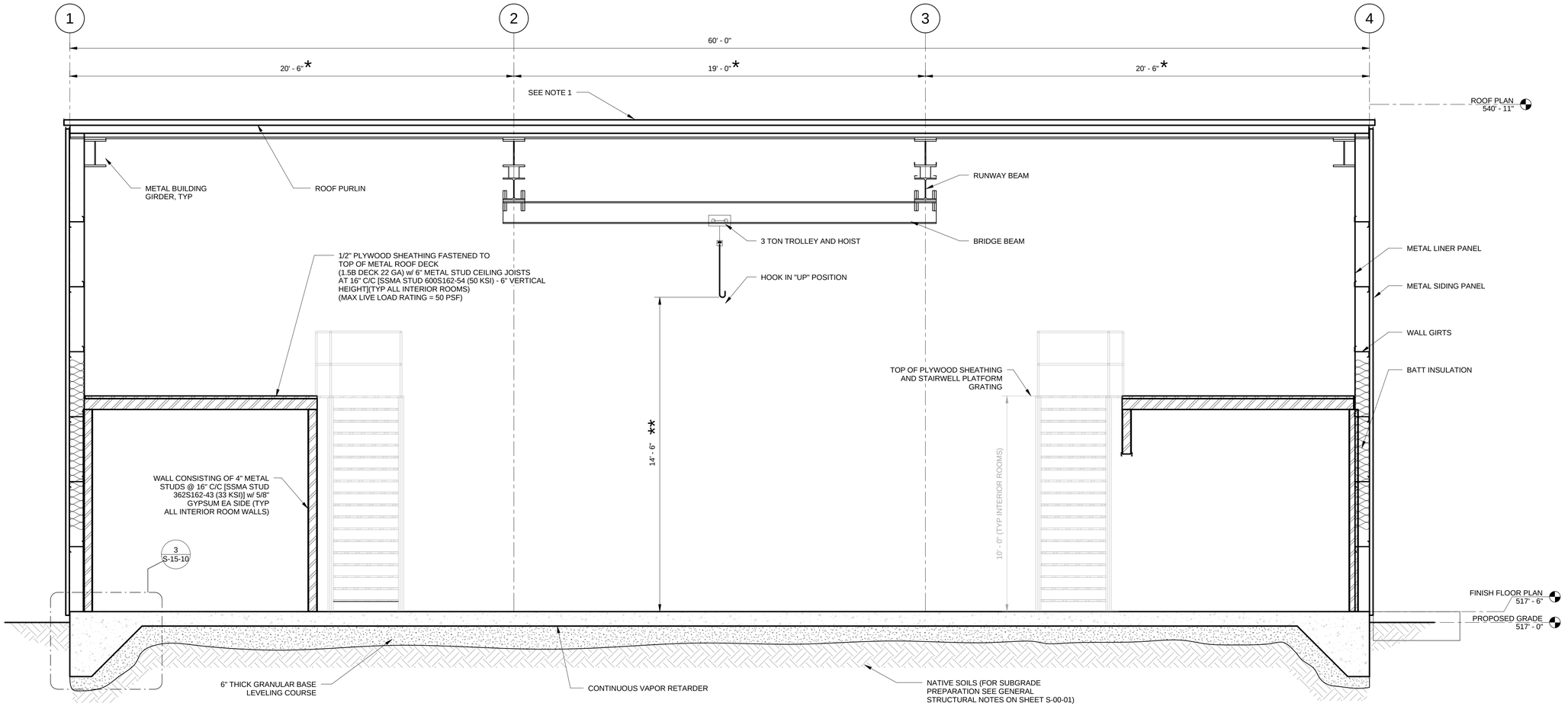

B BUILDING SECTION

3/8" = 1'-0"

- FINAL DESIGN - FOR AGENCY APPROVAL ONLY

NOTES:

1. PHOTOVOLTAIC MODULES NOT SHOWN FOR CLARITY.

* COLUMN AND FOUNDATION LOCATIONS TO BE VERIFIED PER APPROVED PRE-ENGINEERED BUILDING COLUMN LOCATIONS.

** HEIGHT FROM TOP FLOOR TO BOTTOM OF FRAME RAFTER BEAM TO BE VERIFIED TO ACHIEVE MINIMUM 14'-6" HOOK CLEARANCE HEIGHT FROM FLOOR.

REGISTERED PROFESSIONAL ENGINEER MATTHEW S. LOWRY C 61650 EXP. 9-30-17 CIVIL STATE OF CALIFORNIA

ARCADIS

No.	Date	DESCRIPTION	GM/SPEC	DWN	CHKD	SUPV	APVD BY
1	11/18/15	FINAL DESIGN		CMW	MSL	JPB	RAO
0	2/2/15	SUPPLEMENTAL PRE-FINAL (90%) DESIGN		CMW	MSL	JB	MSL

REVISIONS

APPROVED BY	
RAO	

SO	
SUPV	RAO
DSGN	MSL
DWN	CMW
CHKD	MSL
OK	RAO
DATE	11/18/15
SCALES	NONE or AS SHOWN

TOPOCK GROUNDWATER REMEDIATION PROJECT

WORKSHOP BUILDING SECTION

GAS TRANSMISSION & DISTRIBUTION
PACIFIC GAS AND ELECTRIC COMPANY
SAN FRANCISCO, CALIFORNIA

MICROFILM	
BILL OF MATL	
DWG LIST	
SUPSDS	
SUPSD BY	
SHEET NO.	of SHEETS
S-15-09	REV 1

10/29/2015 11:53:41 AM
C:\Users\cvarcata\Documents\Topock Workshop Building_Structural_10.7.15_cvarcata.rvt

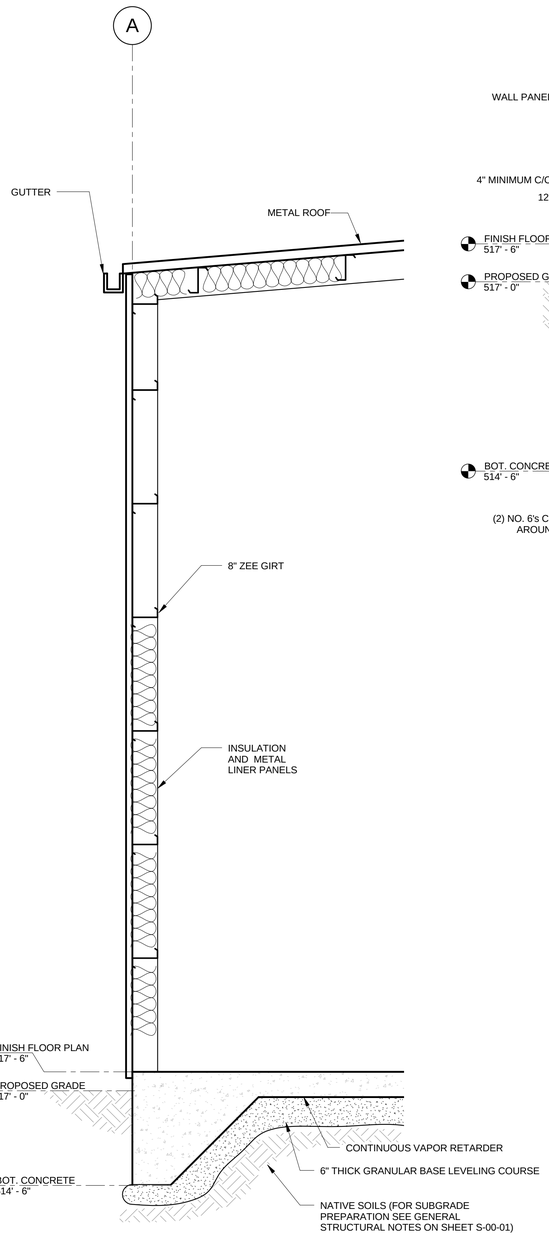

1 TYPICAL SIDEWALL SECTION

1/2" = 1'-0"

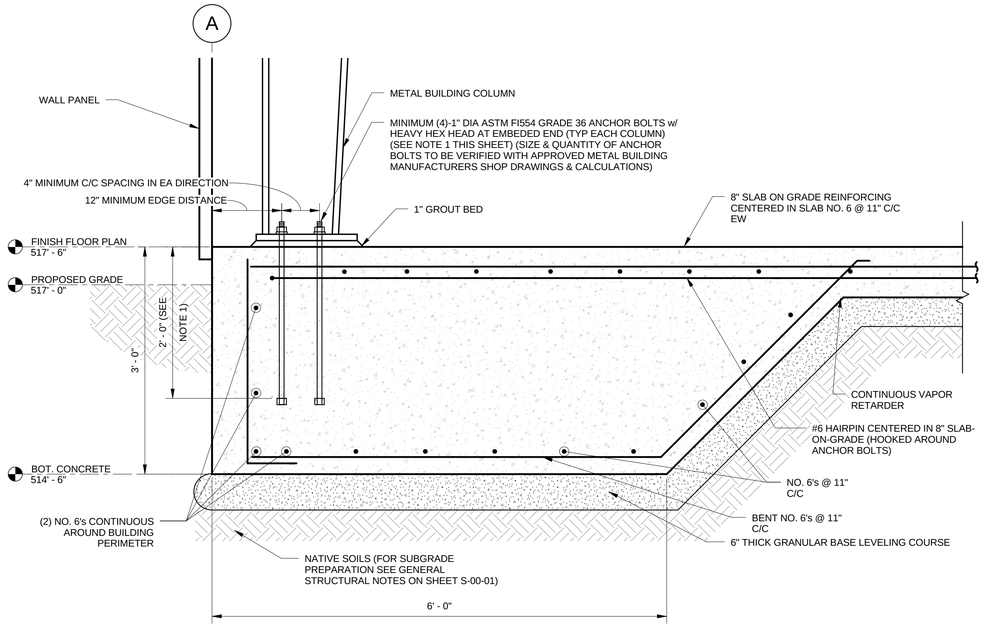

2 INTERIOR FRAME PIER DETAIL

1" = 1'-0"

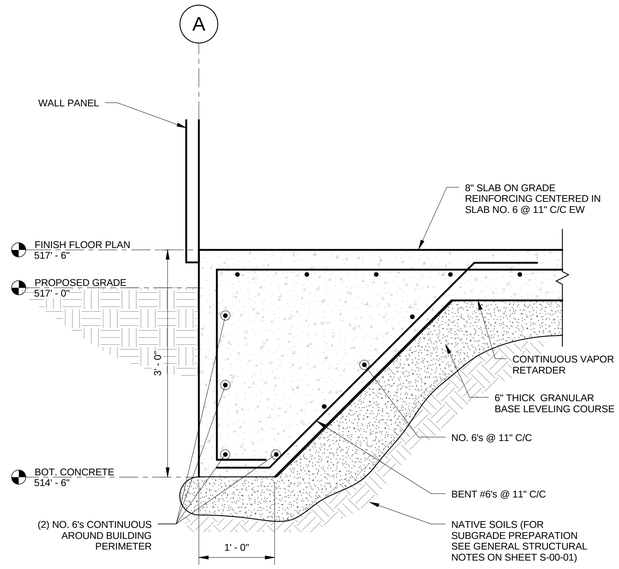

3 TYPICAL WALL FOOTER

1" = 1'-0"

NOTES:

1. EXTEND COLUMN ANCHOR BOLTS A MINIMUM OF 9" INTO FOUNDATION WITH HEAVY HEX NUT TACK-WELDED AT EMBEDED END.
2. PROVIDE STANDARD 90° DOWELS AT CORNERS FOR REINFORCEMENT IDENTIFIED AS CONTINUOUS. SEE DETAIL 6 ON SHEET S-15-12.

- FINAL DESIGN - FOR AGENCY APPROVAL ONLY

REGISTERED PROFESSIONAL ENGINEER
STEPHEN S. LOWE
C 61650
EXP. 9-30-17
CIVIL
STATE OF CALIFORNIA

ARCADIS

No.	Date	DESCRIPTION	GM/SPEC	DWN	CHKD	SUPV	APVD BY
1	11/18/15	FINAL DESIGN	CMW	MSL	JPB	RAO	
0	2/2/15	SUPPLEMENTAL PRE-FINAL (90%) DESIGN	CMW	MSL	JB	MSL	

REVISIONS

APPROVED BY	SO
RAO	SUPV RAO
	DSGN MSL
	DWN CMW
	CHKD MSL
	OK RAO
	DATE 11/18/15
	SCALES NONE or AS SHOWN

TOPOCK GROUNDWATER REMEDIATION PROJECT

WORKSHOP BUILDING SECTIONS & DETAILS (1 OF 2)

GAS TRANSMISSION & DISTRIBUTION
PACIFIC GAS AND ELECTRIC COMPANY
SAN FRANCISCO, CALIFORNIA

MICROFILM	
BILL OF MATL	
DWG LIST	
SUPSDS	
SUPSD BY	
SHEET NO.	of SHEETS
S-15-10	REV 1

10/29/2015 11:53:45 AM
C:\Users\cvancata\Documents\Topok Workshop Building_Structural_10.7.15_cvancata.rvt

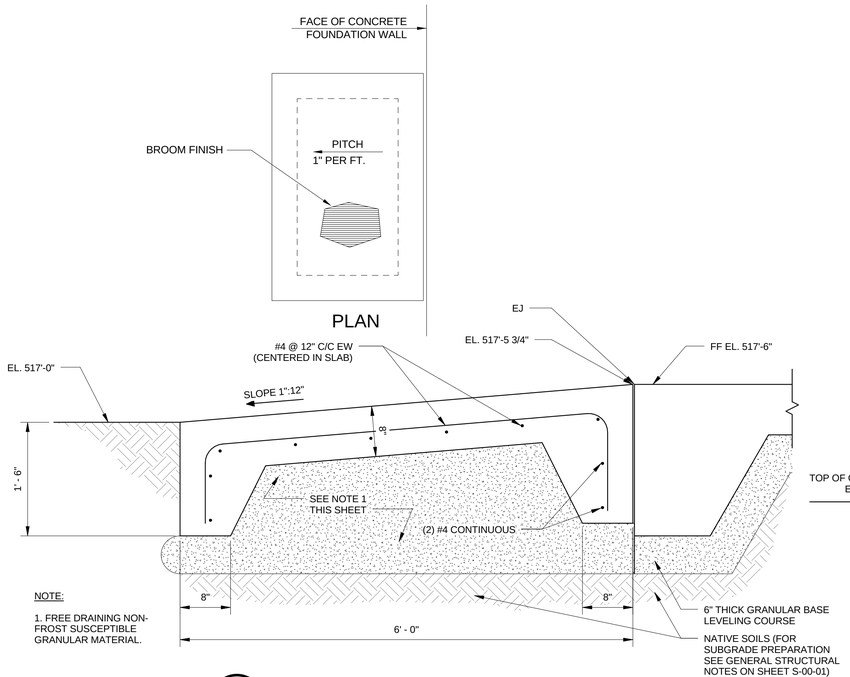

1 CONCRETE APRON PAD DETAIL

1" = 1'-0"

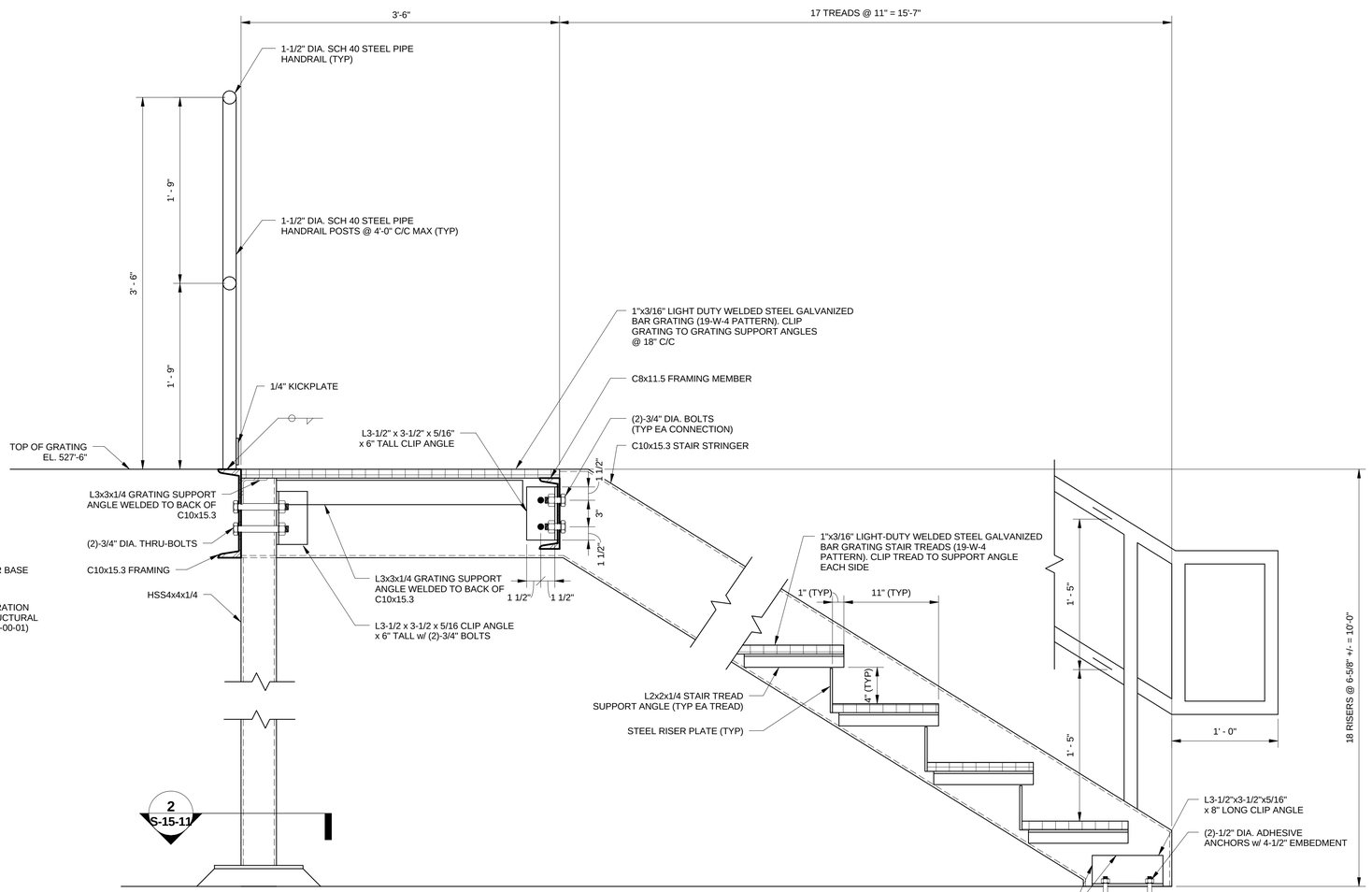

A SECTION A

SCALE: 1-1/2" = 1'-0"

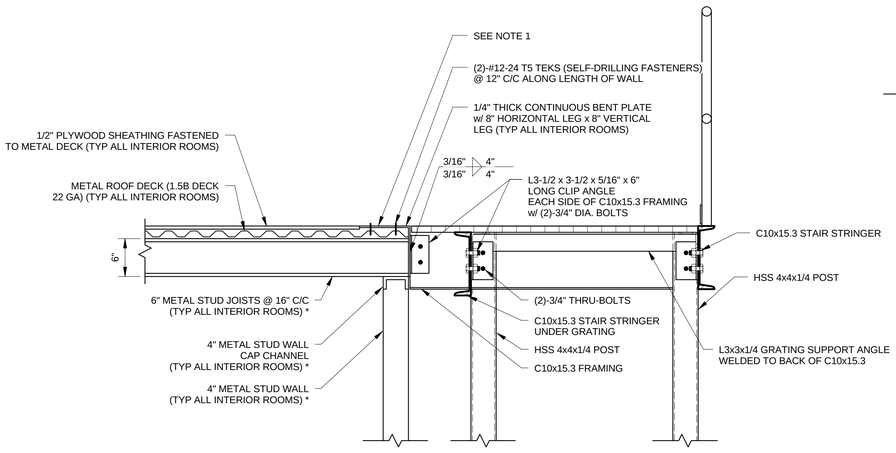

B SECTION B

SCALE: 1" = 1'-0"

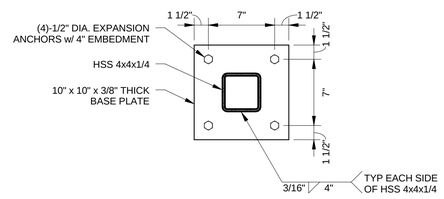

2 COLUMN BASEPLATE DETAIL

SCALE: 1-1/2" = 1'-0"

NOTES:

1. 3'-6" TALL HANDRAIL (SEE SECTION A FOR RAIL SIZE & SPACING, POST SIZE & SPACING, KICKPLATE, AND BASE WELD) REQUIRED ALONG ALL EDGES OF INTERIOR ROOM CEILINGS. WELD POST TO TOP OF 1/4" CONTINUOUS BENT PLATE.

* METAL STUD WALL, WALL CAP CHANNEL, STUD JOISTS, AND THEIR CONNECTIONS TO BE CONSTRUCTED PER METAL STUD MANUFACTURER ASSOCIATION STANDARD DETAILS.

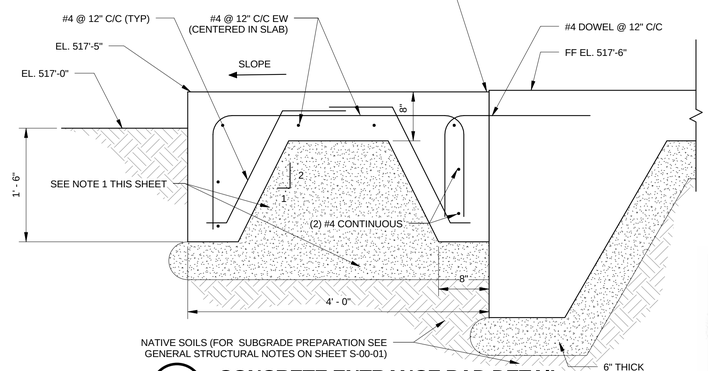

3 CONCRETE ENTRANCE PAD DETAIL

1" = 1'-0"

- FINAL DESIGN - FOR AGENCY APPROVAL ONLY

REGISTERED PROFESSIONAL ENGINEER MATTHEW S. LOWE CIVIL 17650 EXP. 9-30-17 CIVIL STATE OF CALIFORNIA

ARCADIS

No.	Date	DESCRIPTION	GM/SPEC	DWN	CHKD	SUPV	APVD BY
1	11/18/15	FINAL DESIGN	CMW	MSL	JPB	RAO	
0	2/2/15	SUPPLEMENTAL PRE-FINAL (90%) DESIGN	CMW	MSL	JB	MSL	

REVISIONS

APPROVED BY	
RAO	

SO	
SUPV	RAO
DSGN	MSL
DWN	CMW
CHKD	MSL
OK	RAO
DATE	11/18/15
SCALES	NONE or AS SHOWN

TOPOCK GROUNDWATER REMEDIATION PROJECT

WORKSHOP BUILDING SECTIONS AND DETAILS (2 0F 2)

GAS TRANSMISSION & DISTRIBUTION
PACIFIC GAS AND ELECTRIC COMPANY
SAN FRANCISCO, CALIFORNIA

MICROFILM	
BILL OF MATL	
DWG LIST	
SUPSDS	
SUPSD BY	
SHEET NO.	of SHEETS
S-15-11	REV 1

10/29/2015 11:53:48 AM
C:\Users\cwancata\Documents\Topok Workshop Building_Structural_10.7.15_cwancata.rvt

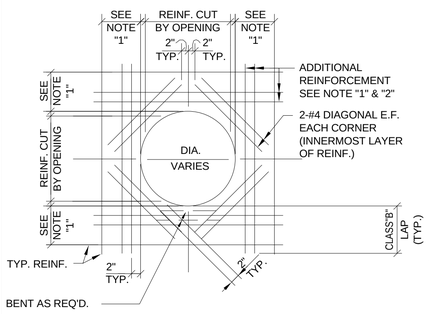

CIRCULAR

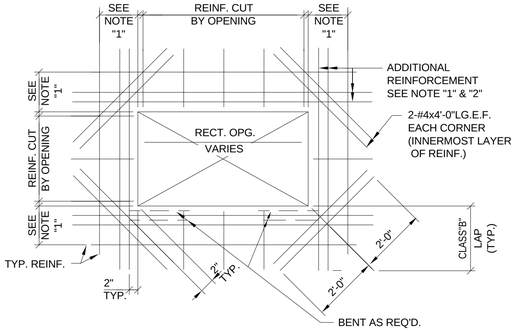

RECTANGULAR

1 TYPICAL REINFORCING AROUND OPENING IN WALL AND SLAB

SCALE: NO SCALE

NOTES:
1. PROVIDE ADDITIONAL REINFORCEMENT AT ALL OPNGS. EQUAL IN AREA TO TYPICAL REINFORCEMENT CUT BY OPENING IN EACH DIRECTION. ADDITIONAL REINFORCEMENT TO MATCH SIZE OF TYPICAL REINFORCEMENT (MIN. 2 BARS E.F.) AND PLACED BETWEEN TYPICAL REINFORCEMENT ON EACH SIDE OF OPENING
2. PROVIDE MATCHING DWLS. WHERE REQ'D. TO PROVIDE CLASS "B" LAP WITH ADDITIONAL. REINF.

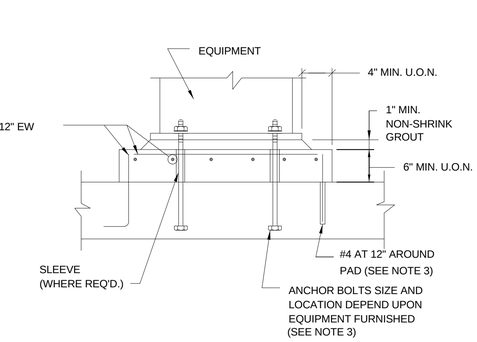

2 TYPICAL EQUIPMENT SUPPORT PAD DETAIL

SCALE: NO SCALE

NOTES:
1. PROVIDE TYP. 6" MIN. CONCRETE SUPPORT PAD FOR ALL EQUIPMENT UON.
2. COORDINATE LOCATION AND SIZE OF PADS WITH OTHER DWGS AND MFGRS CERTIFED DWGS.
3. FOR EXIST. SLABS, DRILL HOLE DIA. & DEPTH IN EXISTING SLAB PER MANUFACTURER'S REQ'MTS FOR ADHESIVE ANSHORAGE SYSTEM.

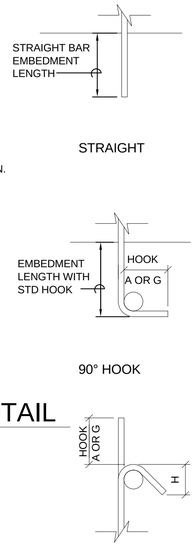

REINFORCEMENT LAP SPLICE, EMBEDMENT LENGTH AND STANDARD HOOKS												
BAR SIZE	MIN LAP LENGTHS FOR				MIN EMBEDMENT LENGTHS					MIN STD. HOOKS		
	BEAMS AND COLUMNS* CLASS B		SLABS AND WALLS ** CLASS B		FOR BEAMS AND COLUMNS *		FOR SLABS AND WALLS **		WITH STD HOOKS	90°	135°	
	TOP***	OTHERS	TOP***	OTHERS	TOP***	OTHERS	TOP***	OTHERS		A OR G	A OR G	H
#3	25	19	16	16	19	15	12	12	5	6	4	2.5
#4	33	25	20	16	25	19	15	12	7	8	4.5	3
#5	41	31	25	19	31	24	19	15	9	10	5.5	3.75
#6	49	37	29	23	37	29	23	18	10	12	8	4.5
#7	71	54	43	33	54	42	33	25	12	14	9	5.25
#8	81	62	49	37	62	48	37	29	14	16	10.5	6
#9	91	70	60	46	70	54	46	36	15	19	-	-
#10	102	79	74	57	79	61	57	44	17	22	-	-
#11	114	87	89	69	87	67	68	53	19	24	-	-

NOTES:

REINFORCEMENT LAP SPLICE, EMBEDMENT LENGTH AND STANDARD HOOKS TABLE IS BASED ON A MINIMUM CONCRETE COMPRESSIVE STRENGTH OF 4000 PSI AND 60000 PSI REINFORCEMENT (WITH NO EPOXY COATING).

ALL LAP SPLICES SHALL BE CLASS B SPLICES.

* THE MINIMUM LAP LENGTH FOR BEAMS, COLUMNS, AND STRAIGHT EMBEDMENTS ARE BASED ON A 3 BAR DIAMETER MINIMUM CENTER TO CENTER BAR SPACING AND A 2 INCH BAR COVER. IF THE SPLICE AND/OR EMBEDMENT DOES NOT CONFORM TO THESE REQUIREMENTS, THEN CONTRACTOR SHALL APPLY APPROPRIATE FACTORS IN COMPLIANCE WITH ACI 318 WITH APPROVAL BY ENGINEER.

** THE MINIMUM LAP LENGTH FOR SLABS, WALLS, AND STRAIGHT EMBEDMENTS ARE BASED ON A 6 INCH BAR SPACING AND A 2 INCH BAR COVER. IF THE LAP CONDITION DOES NOTE CONFORM TO THESE REQUIREMENTS, THEN USE BEAM LAP LENGTHS; OR COMPLY WITH LAP REQUIREMENTS OF ACI 318 WITH APPROVAL BY ENGINEER.

*** TOP BARS ARE DEFINED AS ALL HORIZONTAL BARS, EXCLUDING WALL BARS, WITH 12" OR MORE FRESH CONCRETE BENEATH.

WHERE SPLICES ARE REQUIRED BETWEEN BARS OF DIFFERENT SIZES, THE LAP LENGTH SHALL BE NO LESS THAN THE EMBEDMENT LENGTH OF THE LARGER BAR OR THE LAP LENGTH OF THE SMALLER BAR, WHICHEVER IS GREATER.

IN CIRCULAR TANKS DESIGNED FOR RING TENSION, THE LOCATION OF SPLICES SHOULD BE STAGGERED. ADJACENT HOOP REINFORCING SPLICES SHOULD BE STAGGERED HORIZONTALLY (CENTER OF LAP TO CENTER OF LAP) BY NOT LESS THAN ONE LAP LENGTH NOR 3 FEET AND SHOULD NOT COINCIDE IN VERTICAL ARRAYS MORE FREQUENTLY THAN EVERY THIRD BAR.

3 LAP SPLICE AND EMBEDMENT LENGTH TABLE

SCALE: NO SCALE

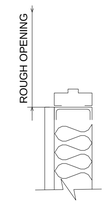

8 DOOR JAMB

SCALE: NO SCALE

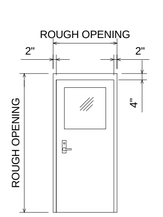

9 DOOR TYPE 1

SCALE: NO SCALE

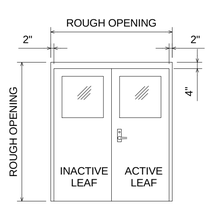

10 DOOR TYPE 2

SCALE: NO SCALE

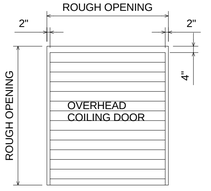

11 DOOR TYPE 3

SCALE: NO SCALE

4 CONSTRUCTION JOINT FOR SLAB ON GRADE

SCALE: NO SCALE

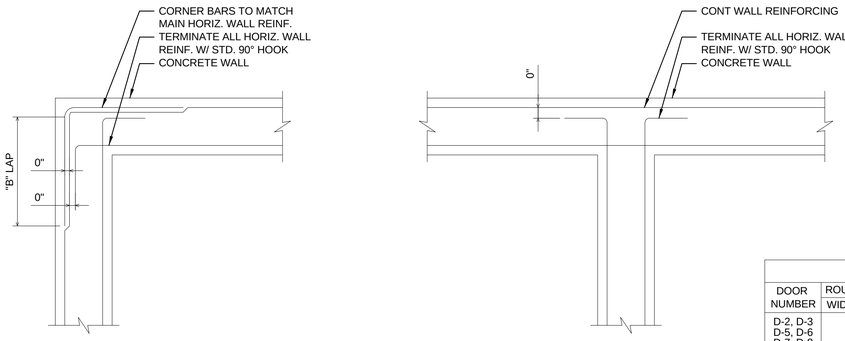

NOTES:
1. SEE PLANS AND SECTIONS FOR WALL INFORMATION.
2. VERTICAL REINFORCEMENT NOT SHOWN FOR CLARITY.
3. FOR ALL STRUCTURES UNLESS NOTED OTHERWISE.

5 TYPICAL CORNER REINFORCEMENT DETAIL

SCALE: NO SCALE

NOTES:
1. BOTTOM REINFORCEMENT TO BE CONTINUOUS WHERE POSSIBLE.
2. FOR PIPE SIZE "D" AND ELEVATION, SEE MECHANICAL DRAWINGS.
3. ALL PIPES LOCATED BENEATH BASE SLABS SHALL BE ENCASED IN CONCRETE UNLESS OTHERWISE NOTED.

6 PIPE ENCASEMENT DETAIL

SCALE: NO SCALE

NOTE:
FOR LOUVERS SEE H DRAWINGS

7 LOUVER

SCALE: 1' = 1'-0"

DOOR SCHEDULE

DOOR NUMBER	ROUGH OPENING WIDTH	ROUGH OPENING HEIGHT	DOOR TYPE	FRAME TYPE	DETAILS HEAD	DETAILS JAMB	U.L. LABEL	HARDWARE SET	REMARKS
D-2, D-3 D-5, D-6 D-7, D-8 D-9, D-10 D-11	3'-0"	7'-2"	1	HM	A	A	-	1	24" X 24" VISION PANEL
D-1	12'-0"	12'-0"	3	HM	A	A	-	1	OVERHEAD COILING DOOR
D-4	6'-4"	7'-2"	2	HM	A	A	-	1	24" X 24" VISION PANEL

HM - HOLLOW METAL

- FINAL DESIGN - FOR AGENCY APPROVAL ONLY



ARCADIS

No.	Date	DESCRIPTION	GM/SPEC	DWN	CHKD	SUPV	APVD BY
1	11/18/15	FINAL DESIGN	CMW	MSL	JPB	RAO	
0	2/2/15	SUPPLEMENTAL PRE-FINAL (90%) DESIGN	CMW	MSL	JB	MSL	

REVISIONS

APPROVED BY	
RAO	
SO	
SUPV	RAO
DSGN	MSL
DWN	CMW
CHKD	MSL
OK	RAO
DATE	11/18/15
SCALES	NONE or AS SHOWN

TOPOCK GROUNDWATER REMEDIATION PROJECT

WORKSHOP BUILDING TYPICAL DETAILS

GAS TRANSMISSION & DISTRIBUTION
PACIFIC GAS AND ELECTRIC COMPANY
SAN FRANCISCO, CALIFORNIA

MICROFILM	
BILL OF MATL	
DWG LIST	
SUPSDS	
SUPSD BY	
SHEET NO.	of SHEETS
S-15-12	REV 1

10/29/2015 11:53:51 AM
C:\Users\cwarcata\Documents\Topok Workshop Building_Structural_10.7.15_cwarcata.rvt

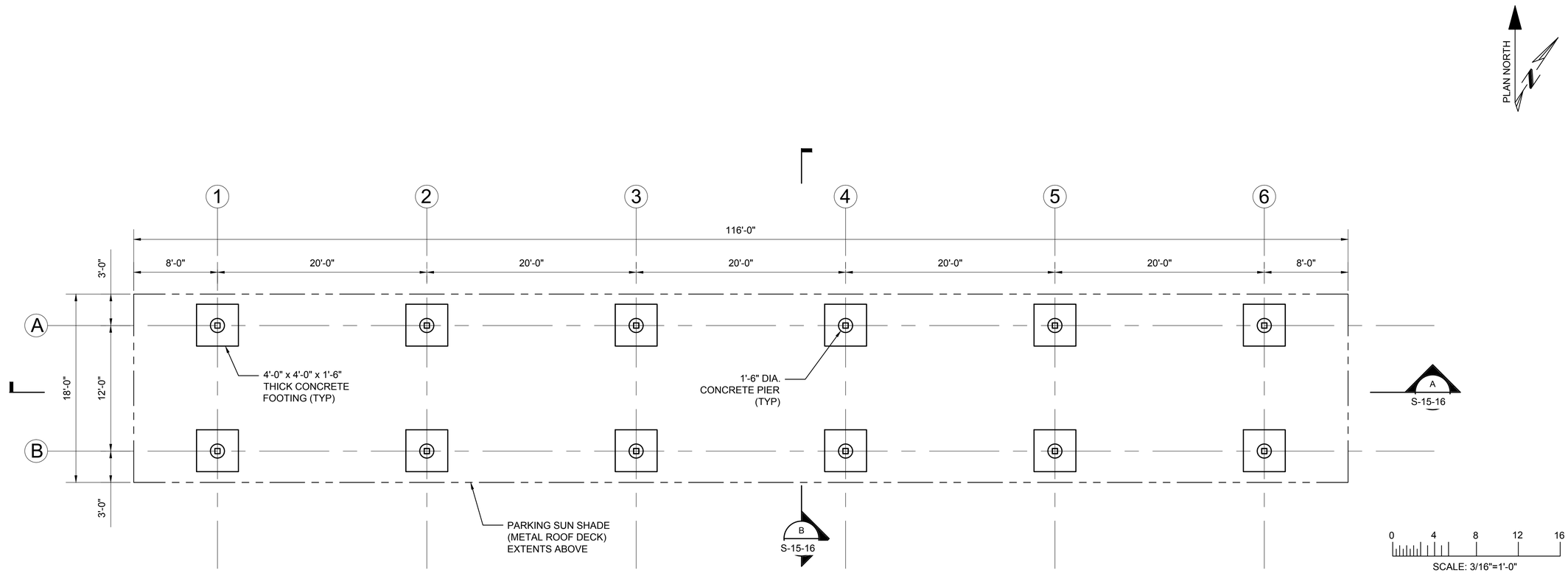

PARKING SUN SHADE - FOUNDATION PLAN

3/16" = 1'-0"

BUILDING CODE DESIGN LOADS:

1. DESIGN CODES: 2013 CALIFORNIA BUILDING CODE
   2012 INTERNATIONAL BUILDING CODE
   ASCE 7-10
2. RISK CATEGORY: II
3. ROOF LOADING:
   - ROOF LIVE LOAD 20 PSF
   - ROOF MAXIMUM DEAD LOAD * 12.5 PSF
   - ROOF MINIMUM DEAD LOAD 2.5 PSF

* ROOF MAXIMUM DEAD LOAD ASSUMES 10 PSF MAXIMUM DEAD LOAD FROM SOLAR PANELS & SOLAR PANEL FRAMING

4. SNOW LOADING: N/A
5. WIND LOADING:
   - BASIC WIND SPEED (3 SECOND GUST) V = 110 MPH - ULTIMATE OR MINIMUM NET
   - WIND PRESSURE, Pnet = 20 PSF WHICHEVER IS GREATER
   - WIND IMPORTANCE FACTOR - Iw - 1.0
   - WIND EXPOSURE C
   - ENCLOSURE - OPEN
   - COMPONENTS & CLADDING LOADS (36 SQUARE FEET):
     - ROOF ZONE 1 THROUGH 3 24.0 PSF / - 24.3 PSF
     - WINDWARD FASCIA 33.5 PSF
     - LEEWARD FASCIA -22.4 PSF
6. SEISMIC CRITERIA:
   - SEISMIC IMPORTANCE FACTOR - Ie - 1.0
   - SEISMIC DESIGN CATEGORY - C
   - SEISMIC SITE CLASS - D
   - MAPPED SPECTRAL RESPONSE ACCELERATIONS - Ss = 0.230; S1 = 0.120
   - SPECTRAL RESPONSE COEFFICIENTS - Sds = 0.245; Sd1 = 0.186
   - SEISMIC FORCE RESISTING SYSTEMS: ORDINARY STEEL MOMENT FRAME
   - RESPONSE MODIFICATION FACTOR - R = 3.5
   - SEISMIC RESPONSE COEFFICIENT - Cs = 0.070
   - DESIGN BASE SHEAR = 2.75 KIPS
   - ANALYSIS PROCEDURE - EQUIVALENT LATERAL FORCE
7. FOUNDATION DESIGN:
   BASED UPON 2,000 PSF ALLOWABLE BEARING PRESSURE IN CONFORMANCE WITH CBC TABLE 1806.2 FOR CLASSIFICATION(S) SW, SP, SM, SC, GM AND/OR GC. A LICENSED GEOTECHNICAL ENGINEER SHALL INSPECT THE EXCAVATIONS AND CONFIRM THAT 2,000 PSF BEARING IS ALLOWED FOR THE FOUNDATIONS.

NOTES:

1. REFER TO THE GENERAL STRUCTURAL NOTES AND STRUCTURAL SPECIFICATIONS FOR ADDITIONAL REQUIREMENTS.

- FINAL DESIGN -
FOR AGENCY
APPROVAL ONLY

REGISTERED PROFESSIONAL ENGINEER
MATTHEW S. LOTZ
C61650
EXP. 9-30-17
CIVIL
STATE OF CALIFORNIA

ETIC ENGINEERING

ARCADIS

NO.	DATE	DESCRIPTION	GM/SPEC	DWN	CHKD	SUPV	APVD BY
1	11/18/15	FINAL DESIGN		AJW	MSL	JPB	RAO
0	2/2/15	SUPPLEMENTAL PRE-FINAL (90%) DESIGN		CMW	MSL	JPB	RAK

REVISIONS

APPROVED BY: RAO

SO / SUPV / DSGN / DWN / CHKD / OK / DATE / SCALES

TOPOCK GROUNDWATER REMEDIATION PROJECT

PARKING SUN SHADE
FOUNDATION PLAN

GAS TRANSMISSION & DISTRIBUTION
PACIFIC GAS AND ELECTRIC COMPANY
SAN FRANCISCO, CALIFORNIA

MICROFILM
BILL OF MATL
DWG LIST
SUPSDS
SUPSD BY
SHEET NO. of SHEETS
S-15-13
REV 1

11/02/2015, 09:25, G:\Graphics\AR\TOPOCK-01\Submittal_100%\DWGs\S-Structural\S-15-13 FOUNDATION PLAN.dwg, Tab: S-15-13

N1808

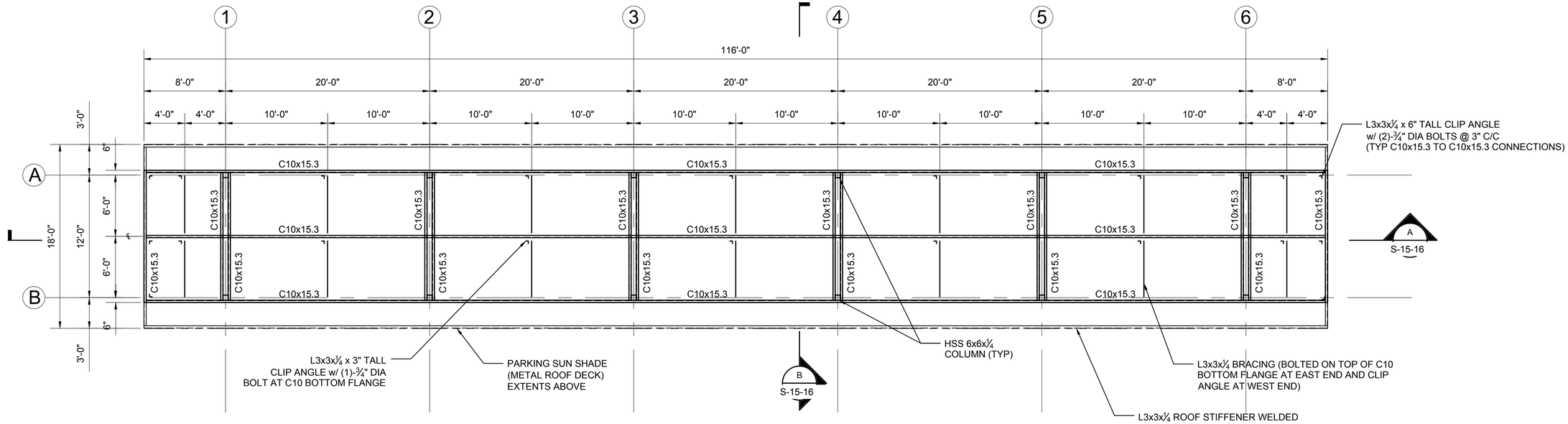

PARKING SUN SHADE - ROOF FRAMING PLAN

3/16" = 1'-0"

0 4 8 12 16

SCALE: 3/16"=1'-0"

STRUCTURAL STEEL NOTES:

1. ALL STRUCTURAL STEEL SHALL BE HOT-DIPPED GALVANIZED TO ASTM A123 AND HARDWARE TO BE GALVANIZED PER ASTM A153. THEN AFTER ERECTED, ALL STRUCTURAL STEEL TO BE PRIMED PROPERLY AND FINISH PAINTED PER SPECIFICATION 09 90 00.

- FINAL DESIGN - FOR AGENCY APPROVAL ONLY

REGISTERED PROFESSIONAL ENGINEER
MATTHEW S. LOWE
C 61650
EXP. 9-30-17
CIVIL
STATE OF CALIFORNIA

ETIC ENGINEERING

ARCADIS

NO.	DATE	DESCRIPTION	GM/SPEC	DWN	CHKD	SUPV	APVD BY
1	11/18/15	FINAL DESIGN		AJW	MSL	JPB	RAO
0	2/2/15	SUPPLEMENTAL PRE-FINAL (90%) DESIGN		CMW	MSL	JPB	RAK

REVISIONS

APPROVED BY	
RAO	SO
	SUPV
	DSGN
	DWN
	CHKD
	OK
	DATE
	SCALES

TOPOCK GROUNDWATER REMEDIATION PROJECT

PARKING SUN SHADE
ROOF FRAMING PLAN

GAS TRANSMISSION & DISTRIBUTION
PACIFIC GAS AND ELECTRIC COMPANY
SAN FRANCISCO, CALIFORNIA

MICROFILM	
BILL OF MATL	
DWG LIST	
SUPSDS	
SUPSD BY	
SHEET NO. of	SHEETS
S-15-14	REV 1

N1808

11/02/2015, 09:26, G:\Graphics\ARTOPOCK-01\Submittal_100%\DWGs\S-Structural\S-15-14 ROOF FRAMING PLAN.dwg, Tab: S-15-14

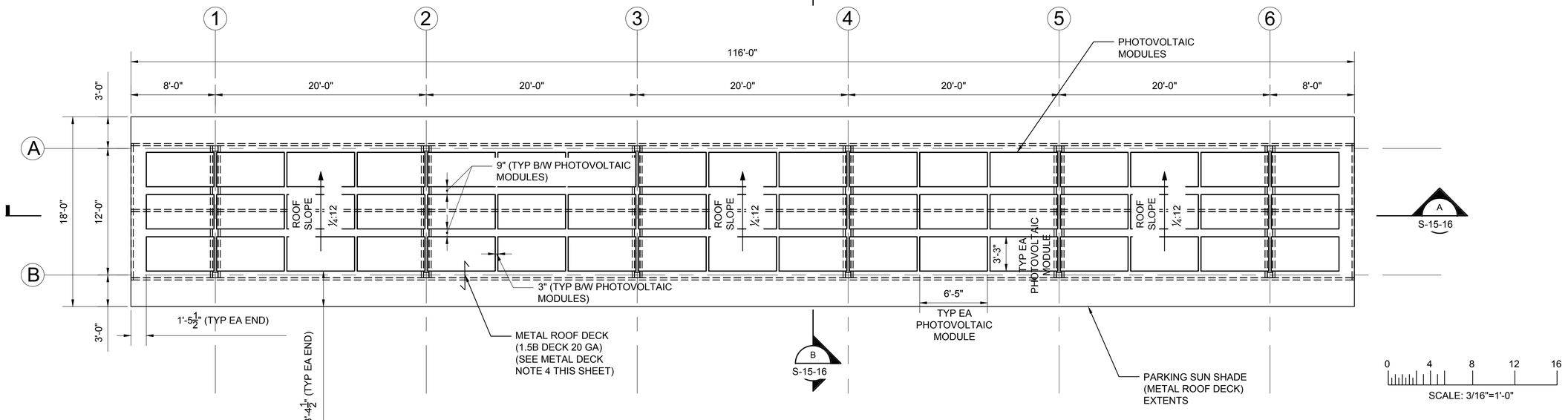

PARKING SUN SHADE - ROOF PLAN

3/16" = 1'-0"

METAL DECK NOTES:

METAL DECK SCHEDULE								
TYPE	DEPTH (IN)	PANEL WIDTH (IN)	DESIGN THICKNESS (IN)	MIN. YIELD STRENGTH Fy (KSI)	MIN. (+) S (IN^3/FT)	MIN. I (IN^4/FT)	MIN. DIAPHRAGM SHEAR CAPACITY (LBS/FT)	FINISH
ROOF DECK	1½	36	0.0358	33 (ASTM A653)	0.234	0.201	400	GALVANIZED*

* GALVANIZING SHALL CONFORM TO ASTM A924 WITH COATING CLASS OF G90 AS DEFINED IN ASTM A623.

1. DECK UNIT ANCHORAGE TO STEEL SUPPORTING MEMBERS UTILIZING ARC SPOT PUDDLE WELDS OR MECHANICAL FASTENERS BASED ON THE FOLLOWING MINIMUMS:
   A. ARC SPOT PUDDLE WELDS SHALL BE ⅝" MINIMUM VISIBLE DIAMETER WITH THE ATTACHMENT PATTERN OF 36/7 OR
   B. #12-24 T5 TEKS (SELF-DRILLING FASTENERS BY ITW BUILDEX) WITH THE ATTACHMENT PATTERN OF 36/7.
2. MINIMUM SIDE LAP ATTACHMENT SHALL BE 6 FASTENERS PER SPAN AND SHALL BE ARC SPOT PUDDLE WELDS OR MECHANICAL FASTENERS:
   A. ARC SPOT PUDDLE WELD SHALL BE ⅝" MINIMUM VISIBLE DIAMETER OR
   B. #10 TEK SCREW
3. MINIMUM EDGE ATTACHMENT SHALL BE 6" AND SHALL BE ⅝" MINIMUM VISIBLE DIAMETER.
4. DECKING SHALL BE INSTALLED AS 1 COMPLETE UNIT FROM ONE END TO OTHER END OVER 18'-0" COVERED PARKING AREA WIDTH.
5. IF ARC SPOT PUDDLE WELDS ARE UTILIZED FOR METAL DECK ATTACHMENTS, THEY MUST BE TOUCHED UP WITH HOT-DIP GALVANIZED COATING REPAIR PRODUCT SPECIFIED IN SPECIFICATION 05 12 00, ALONG WITH PV SOLAR PANEL SUPPORT FRAMING BASE BRACKET WELDED OR BOLTED CONNECTIONS TO METAL DECK, BEFORE PRIMING AND FINISH PAINTING.
6. ALL STRUCTURAL STEEL TO BE PRIMED PROPERLY AND FINISH PAINTED PER SPECIFICATION 09 90 00.

PHOTVOLTAIC (PV) SOLAR PANEL NOTES:

1. PV SOLAR PANEL UNITS ARE TO BE PROVIDED ON TOP OF THE METAL ROOF DECK OF THE COVERED PARKING STRUCTURE. THE PV SOLAR PANEL UNIT MANUFACTURER IS RESPONSIBLE FOR THE FOLLOWING:
   A. THE PV SOLAR PANEL UNIT MANUFACTURER IS RESPONSIBLE FOR PROVIDING AND DESIGNING ALL ITEMS (PV SOLAR PANELS/PANEL SUPPORT FRAMING/ROOF CLIPS (ATTACHING TO METAL ROOF DECK)/HARDWARE/ETC.). THIS INCLUDES THE STRUCTURAL FRAMING AND HARDWARE ATTACHING TO THE BACK OF THE PV SOLAR PANELS AND SPANNING TO EACH ROOF CLIP (ATTACHING TO METAL ROOF DECK), THE CONNECTION OF THE PV SOLAR PANEL UNIT FRAMING TO THE ROOF CLIP (ATTACHING TO METAL ROOF DECK), AND THE ROOF CLIP AND ITS BOLTED/WELDED CONNECTION TO THE METAL ROOF DECK ITSELF.
   B. THE PV SOLAR PANEL UNIT MANUFACTURER MUST PROVIDE THE FOLLOWING:
      1. SUBMIT P.E. (REGISTERED IN THE STATE OF CALIFORNIA) SIGNED AND SEALED DETAILS/DESIGN CALCULATIONS/DESIGN LOADS (DEAD/LIVE/SEISMIC/WIND LOADS) ACTING ON THE PV SOLAR PANEL UNITS, PANEL SUPPORT FRAMING, ROOF CLIPS AND ITS BOLTED/WELDED CONNECTION TO METAL ROOF DECK, AND HARDWARE.

- FINAL DESIGN - FOR AGENCY APPROVAL ONLY

REGISTERED PROFESSIONAL ENGINEER MATTHEW S. LOWRY No. C 65017 EXP. 9-30-17 CIVIL STATE OF CALIFORNIA

ETIC ENGINEERING

ARCADIS

NO.	DATE	DESCRIPTION	GM/SPEC	DWN	CHKD	SUPV	APVD	BY
1	11/18/15	FINAL DESIGN		AJW	MSL	JPB	RAO	
0	2/2/15	SUPPLEMENTAL PRE-FINAL (90%) DESIGN		CMW	MSL	JPB	RAK	

REVISIONS

APPROVED BY: RAO

SO
SUPV
DSGN
DWN
CHKD
OK
DATE
SCALES

TOPOCK GROUNDWATER REMEDIATION PROJECT

PARKING SUN SHADE ROOF PLAN

GAS TRANSMISSION & DISTRIBUTION
PACIFIC GAS AND ELECTRIC COMPANY
SAN FRANCISCO, CALIFORNIA

MICROFILM
BILL OF MATL
DWG LIST
SUPSDS
SUPSD BY
SHEET NO. of SHEETS

S-15-15 | REV 1

11/02/2015, 09:26, G:\Graphics\ART\TOPOCK-01\Submittal_100%\DWGs\S-Structural\S-15-15 ROOF PLAN.dwg, Tab: S-15-15

N1808

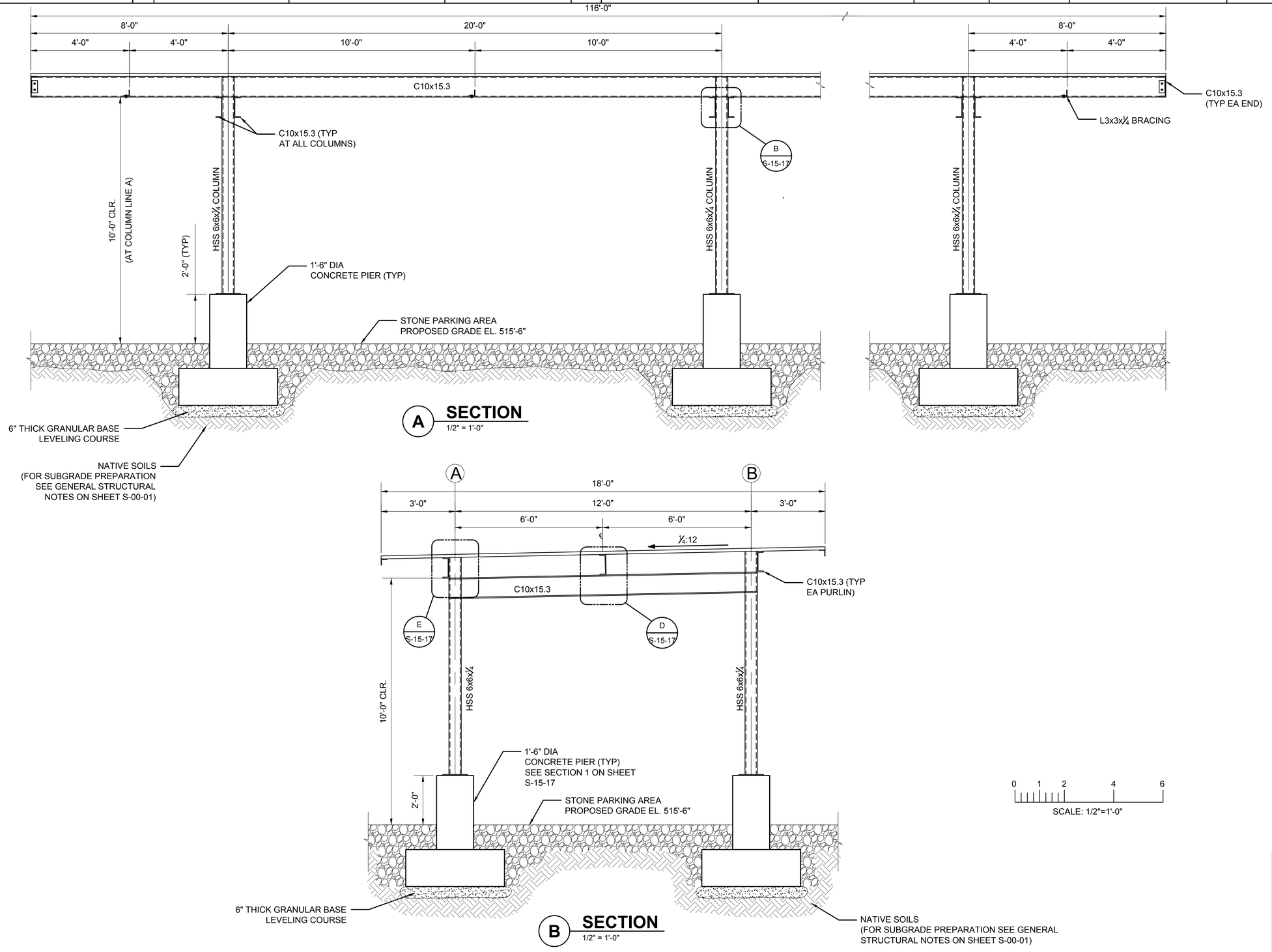

- FINAL DESIGN - FOR AGENCY APPROVAL ONLY

REGISTERED PROFESSIONAL ENGINEER
MATTHEW S. LOTTER
C 61650
EXP. 9-30-17
CIVIL
STATE OF CALIFORNIA

ETIC ENGINEERING

ARCADIS

NO.	DATE	DESCRIPTION	GM/SPEC	DWN	CHKD	SUPV	APVD BY
1	11/18/15	FINAL DESIGN		AJW	MSL	JPB	RAO
0	2/2/15	SUPPLEMENTAL PRE-FINAL (90%) DESIGN		CMW	MSL	JPB	RAK

REVISIONS

APPROVED BY: RAO

SO / SUPV / DSGN / DWN / CHKD / OK / DATE / SCALES

TOPOCK GROUNDWATER REMEDIATION PROJECT

PARKING SUN SHADE SECTIONS

GAS TRANSMISSION & DISTRIBUTION
PACIFIC GAS AND ELECTRIC COMPANY
SAN FRANCISCO, CALIFORNIA

MICROFILM
BILL OF MATL
DWG LIST
SUPSDS
SUPSD BY
SHEET NO. of SHEETS
S-15-16
REV 1

11/02/2015, 09:26, G:\Graphics\ART\TOPOCK-01\Submittal_100%\DWGs\S-Structural\S-15-16 SECTIONS.dwg, Tab: S-15-16

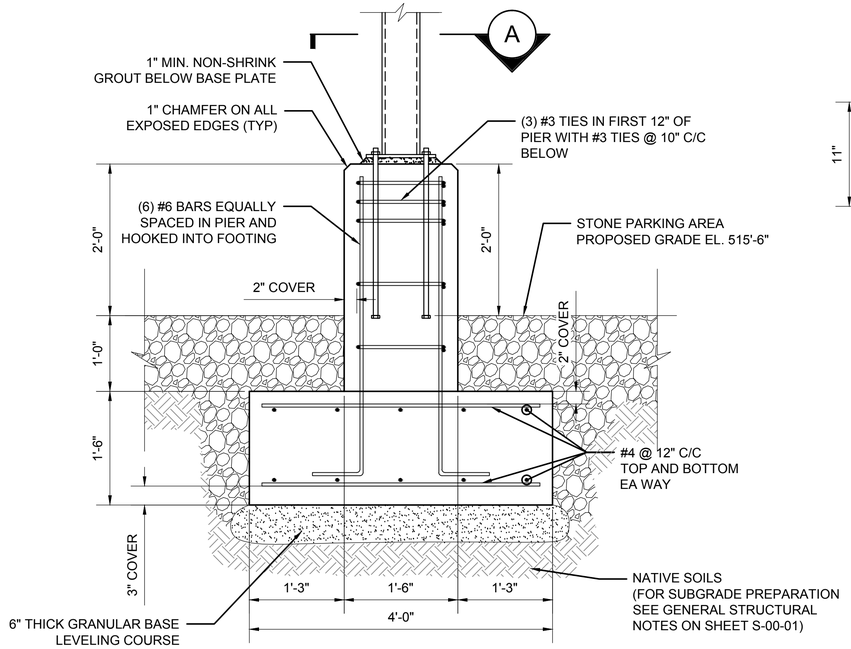

1 SECTION
1" = 1'-0"

0 1 2 3
SCALE: 1"=1'-0"

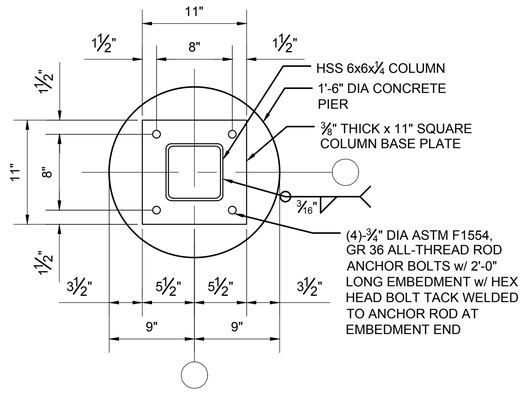

A BASE PLATE DETAIL
1-1/2" = 1'-0"

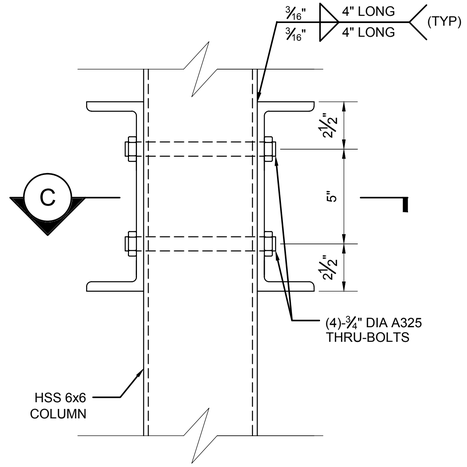

B BEAM TO COLUMN CONNECTION
3" = 1'-0"

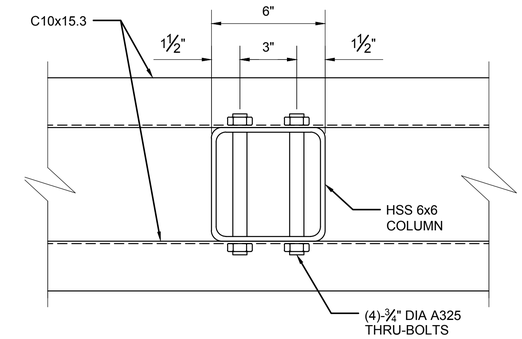

C BEAM TO COLUMN TOP PLAN
3" = 1'-0"

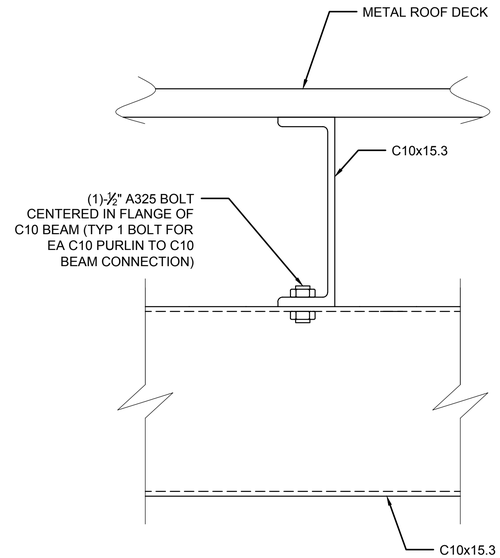

D PURLIN TO BEAM CONNECTION
3" = 1'-0"

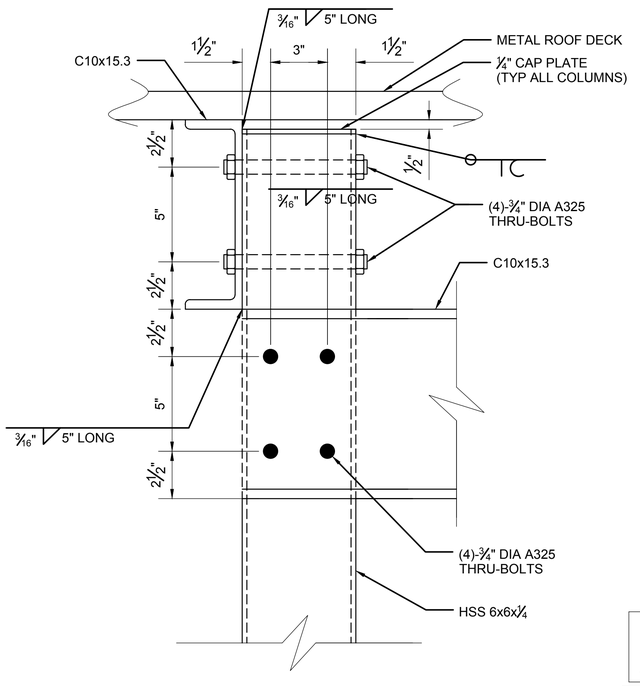

E PURLIN TO COLUMN CONNECTION
3" = 1'-0"

0 1 2
SCALE: 1-1/2"=1'-0"

0 1/2 1
SCALE: 3"=1'-0"

- FINAL DESIGN -
FOR AGENCY
APPROVAL ONLY

REGISTERED PROFESSIONAL ENGINEER
MATTHEW S. LOVELL
C 61650
EXP. 9-30-17
CIVIL
STATE OF CALIFORNIA

ETIC ENGINEERING

ARCADIS

NO.	DATE	DESCRIPTION	GM/SPEC	DWN	CHKD	SUPV	APVD BY
1	11/18/15	FINAL DESIGN		AJW	MSL	JPB	RAO
0	2/2/15	SUPPLEMENTAL PRE-FINAL (90%) DESIGN		CMW	MSL	JPB	RAK

REVISIONS

APPROVED BY: RAO

SO
SUPV
DSGN
DWN
CHKD
OK
DATE
SCALES

TOPOCK GROUNDWATER REMEDIATION PROJECT

PARKING SUN SHADE DETAILS

GAS TRANSMISSION & DISTRIBUTION
PACIFIC GAS AND ELECTRIC COMPANY
SAN FRANCISCO, CALIFORNIA

MICROFILM
BILL OF MATL
DWG LIST
SUPSDS
SUPSD BY
SHEET NO. of SHEETS
S-15-17
REV 1

11/02/2015, 09:27, G:\Graphics\AR\TOPOCK-01\Submittal_100%\DWGs\S-Structural\S-15-17 DETAILS.dwg, Tab: S-15-17

N1808

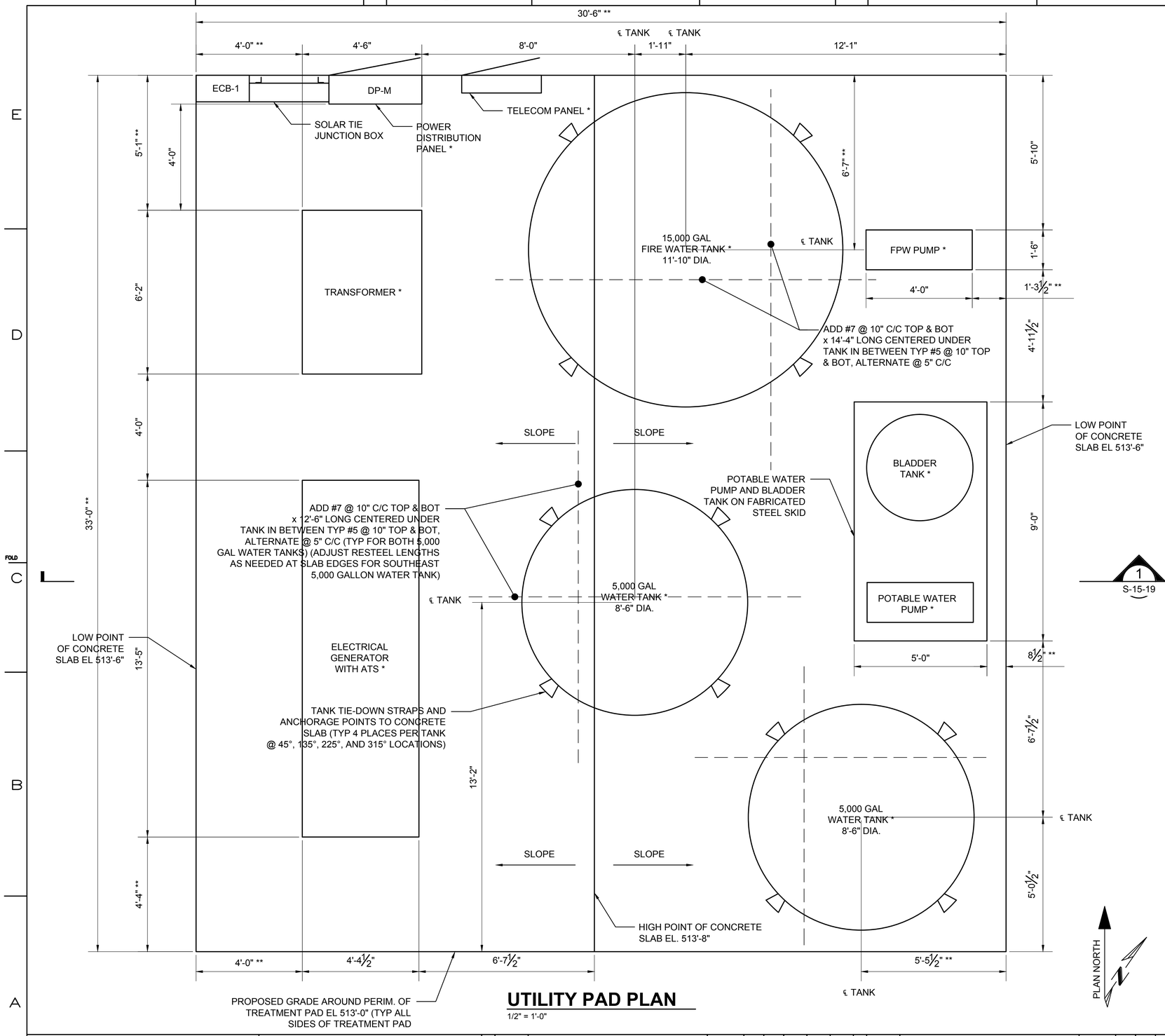

UTILITY PAD PLAN

1/2" = 1'-0"

1
S-15-19

NOTES:
1. REFER TO THE GENERAL STRUCTURAL NOTES AND STRUCTURAL SPECIFICATIONS FOR ADDITIONAL REQUIREMENTS.

FOUNDATION DESIGN:

BASED UPON 2,000 PSF ALLOWABLE BEARING PRESSURE IN CONFORMANCE WITH CBC TABLE 1806.2 FOR CLASSIFICATION(S) SW, SP, SM, SC, GM AND/OR GC. A LICENSED GEOTECHNICAL ENGINEER SHALL INSPECT THE EXCAVATIONS AND CONFIRM THAT 2,000 PSF BEARING IS ALLOWED FOR THE FOUNDATIONS.

* VERIFY SIZE WITH APPROVED TANK, PUMP, TRANSFORMER, GENERATOR AND ELECTRICAL/COMMUNICATION PANEL MANUFACTURER'S SHOP DRAWINGS.

** CONCRETE DIMENSIONS TO BE VERIFIED PER APPROVED TANK, PUMP, TRANSFORMER, GENERATOR, AND ELECTRICAL/COMMUNICATIONS PANEL MANUFACTURER'S SHOP DRAWINGS.

CODE DESIGN LOADS:

1. DESIGN CODES: 2013 CALIFORNIA BUILDING CODE; 2012 INTERNATIONAL BUILDING CODE; ASCE 7-10
2. RISK CATEGORY: IV
3. LIVE LOADS: 100 PSF
4. SNOW LOADING: N/A
5. FLOOD LOADS: N/A
6. WIND LOADS:
   - BASIC WIND SPEED (3 SECOND GUST) V = 115 MPH - ULTIMATE OR MINIMUM NET WIND PRESSURE, Pnet = 20 PSF WHICHEVER IS GREATER
   - WIND EXPOSURE C
7. SEISMIC LOADS:
   - SEISMIC IMPORTANCE FACTOR - Ie - 1.5
   - SEISMIC DESIGN CATEGORY - D
   - SEISMIC SITE CLASS - D
   - MAPPED SPECTRAL RESPONSE ACCELERATIONS - Ss = 0.230; S1 = 0.120
   - SPECTRAL RESPONSE COEFFICIENTS - Sds = 0.245; Sd1 = 0.186
   - ANALYSIS PROCEDURE - ASCE 7-10 CHAPTER 15 SEISMIC REQUIREMENTS FOR NON-BUILDING STRUCTURES FOR TANKS AND CHAPTER 13 SEISMIC DESIGN REQUIREMENTS FOR NON-STRUCTURAL COMPONENTS FOR PUMPS, TRANSFORMER, GENERATOR AND ELECTRICAL/ COMMUNICATIONS PANELS, AND FABRICATED STEEL SKID

- FINAL DESIGN - FOR AGENCY APPROVAL ONLY

REGISTERED PROFESSIONAL ENGINEER STEPHEN S. LOW No. 61650 EXP. 9-30-17 CIVIL STATE OF CALIFORNIA

ETIC ENGINEERING

ARCADIS

NO.	DATE	DESCRIPTION	GM/SPEC	DWN	CHKD	SUPV	APVD BY
1	11/18/15	FINAL DESIGN	AJW	MSL	JPB	RAO	
0	2/2/15	SUPPLEMENTAL PRE-FINAL (90%) DESIGN	CMW	MSL	JPB	RAK	

REVISIONS

APPROVED BY	SO
RAO	SUPV
	DSGN
	DWN
	CHKD
	OK
	DATE
	SCALES

TOPOCK GROUNDWATER REMEDIATION PROJECT

UTILITY PAD PLAN

GAS TRANSMISSION & DISTRIBUTION
PACIFIC GAS AND ELECTRIC COMPANY
SAN FRANCISCO, CALIFORNIA

MICROFILM	
BILL OF MATL	
DWG LIST	
SUPSDS	
SUPSD BY	
SHEET NO. of SHEETS	
S-15-18	REV 1

11/02/2015, 09:27, G:\Graphics\ARI\TOPOCK-01\Submittal_100%\DWG\ss\S-StructuralS-15-18 UTILITY PAD PLAN.dwg, Tab: S-15-18

N1808

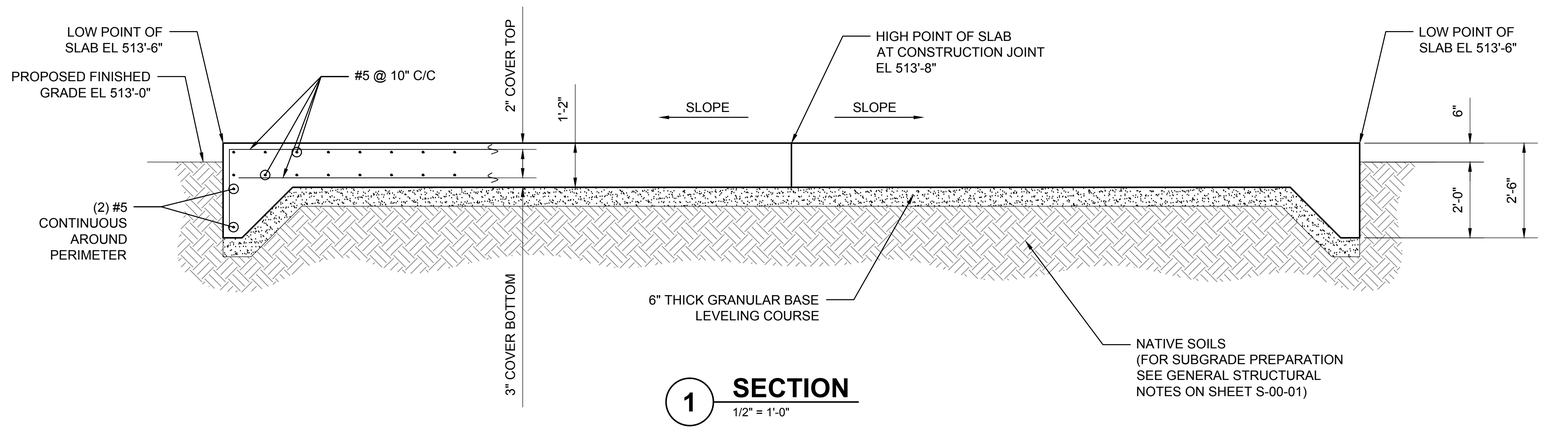

1 SECTION
1/2" = 1'-0"

0 1 2 4 6
SCALE: 1/2"=1'-0"

NOTES:

1. 15,000 GALLON FIRE WATER TANK:
   - 1.1. TANK TIE-DOWN STRAPS AND ANCHORAGE TO CONCRETE SLAB (FOR SEISMIC AND WIND LOADS SHOWN ON SHEET S-15-18) ARE TO BE DESIGNED AND PROVIDED BY TANK MANUFACTURER. HOWEVER, A MINIMUM OF 4 TIE-DOWN STRAPS (EQUALLY SPACED AROUND PERIMETER) TO BE PROVIDED. EACH TIE-DOWN STRAP TO HAVE A MINIMUM OF (3)-¾" DIAMETER GALVANIZED ADHESIVE ANCHORS @ 8" C/C MINIMUM SPACING AND 10" MINIMUM EMBEDMENT (TANK MANUFACTURER TO DESIGN TIE-DOWN TO ADHESIVE ANCHOR CONNECTION). TANK MUST ALSO HAVE A MINIMUM OF (4)-L6x3½x5/16x11" LONG CLIP ANGLES LLV WITH (2)-3/4" DIAMETER GALVANIZED ADHESIVE ANCHORS @ 8" MINIMUM SPACING AND 10" MINIMUM EMBEDMENT IN EACH CLIP ANGLE. SPACE 4 CLIP ANGLES EQUALLY AROUND TANK PERIMETER.
   - 1.2. STRUCTURAL DESIGN OF FOUNDATION SLAB ASSUMES A 15,000 GALLON FIRE WATER TANK OF THE FOLLOWING GEOMETRY:
     - 1.2.1. APPROX 11'-10" DIA FLAT-BOTTOM TANK WITH ROUNDED ROOF TOP STARTING APPROX 18'-0" ABOVE TOP OF SLAB AND TOP OF ROOF AT APPROX 19'-3½" ABOVE TOP OF SLAB.
     - 1.2.2. TANK CAPACITY = 15,000 GALLONS WITH LIQUID SPECIFIC GRAVITY SIMILAR TO WATER.
     - 1.2.3. FRP TANK CONSTRUCTION WITH EMPTY WEIGHT = 2,500#.

2. 5,000 GALLON WATER TANK:
   - 2.1. TANK TIE-DOWN STRAPS AND ANCHORAGE TO CONCRETE SLAB (FOR SEISMIC AND WIND LOADS SHOWN ON SHEET S-15-18) ARE TO BE DESIGNED AND PROVIDED BY TANK MANUFACTURER. HOWEVER, A MINIMUM OF 4 TIE-DOWN STRAPS (EQUALLY SPACED AROUND PERIMETER) TO BE PROVIDED. EACH TIE-DOWN STRAP TO HAVE A MINIMUM OF (2)-¾" DIAMETER GALVANIZED ADHESIVE ANCHORS @ 8" C/C MINIMUM SPACING AND 10" MINIMUM EMBEDMENT (TANK MANUFACTURER TO DESIGN TIE-DOWN TO ADHESIVE ANCHOR CONNECTION). TANK MUST ALSO HAVE A MINIMUM OF (4)-L6x3½x5/16x8" LONG CLIP ANGLES LLV WITH (1)-3/4" DIAMETER GALVANIZED ADHESIVE ANCHOR WITH 10" EMBEDMENT IN EACH CLIP ANGLE. SPACE 4 CLIP ANGLES EQUALLY AROUND TANK PERIMETER.
   - 2.2. STRUCTURAL DESIGN OF FOUNDATION SLAB ASSUMES A 5,000 GALLON WATER TANK OF THE FOLLOWING GEOMETRY:
     - 2.2.1. APPROX 8'-6" DIA FLAT-BOTTOM TANK WITH ROUNDED ROOF TOP STARTING APPROX 11'-6" ABOVE TOP OF SLAB AND TOP OF ROOF AT APPROX 12'-9" ABOVE TOP OF SLAB.
     - 2.2.2. TANK CAPACITY = 5,000 GALLONS WITH LIQUID SPECIFIC GRAVITY SIMILAR TO WATER.
     - 2.2.3. FRP TANK CONSTRUCTION WITH EMPTY WEIGHT = 1,250#.

3. BLADDER TANK, TRANSFORMER, ELECTRICAL GENERATOR, PUMPS, ELECTRICAL/COMMUNICATION PANELS, AND FABRICATED STEEL SKID:
   - 3.1. EQUIPMENT ANCHORAGE TO FABRICATED STEEL SKID AND FABRICATED STEEL SKID TO CONCRETE SLAB (FOR SEISMIC AND WIND LOADS SHOWN ON S-15-18) ARE TO BE DESIGNED AND PROVIDED BY EQUIPMENT MANUFACTURER.

- FINAL DESIGN - FOR AGENCY APPROVAL ONLY

REGISTERED PROFESSIONAL ENGINEER MATTHEW S. LOWRY C 81650 EXP. 9-30-17 CIVIL STATE OF CALIFORNIA

ETIC ENGINEERING

ARCADIS

NO.	DATE	DESCRIPTION	GM/SPEC	DWN	CHKD	SUPV	APVD BY
1	11/18/15	FINAL DESIGN	AJW	MSL	JPB	RAO	
0	2/2/15	SUPPLEMENTAL PRE-FINAL (90%) DESIGN	CMW	MSL	JPB	RAK	

REVISIONS

APPROVED BY	
RAO	SO
	SUPV
	DSGN
	DWN
	CHKD
	OK
	DATE
	SCALES

TOPOCK GROUNDWATER REMEDIATION PROJECT

UTILITY PAD DETAILS

GAS TRANSMISSION & DISTRIBUTION
PACIFIC GAS AND ELECTRIC COMPANY
SAN FRANCISCO, CALIFORNIA

MICROFILM	
BILL OF MATL	
DWG LIST	
SUPSDS	
SUPSD BY	
SHEET NO. of SHEETS	
S-15-19	REV 1

11/02/2015, 09:27, G:\Graphics\ARITOPOCK-01\Submittal_100%\DWGs\S-Structural\S-15-19 UTILITY PAD SECTIONS.dwg, Tab: S-15-19

N1808

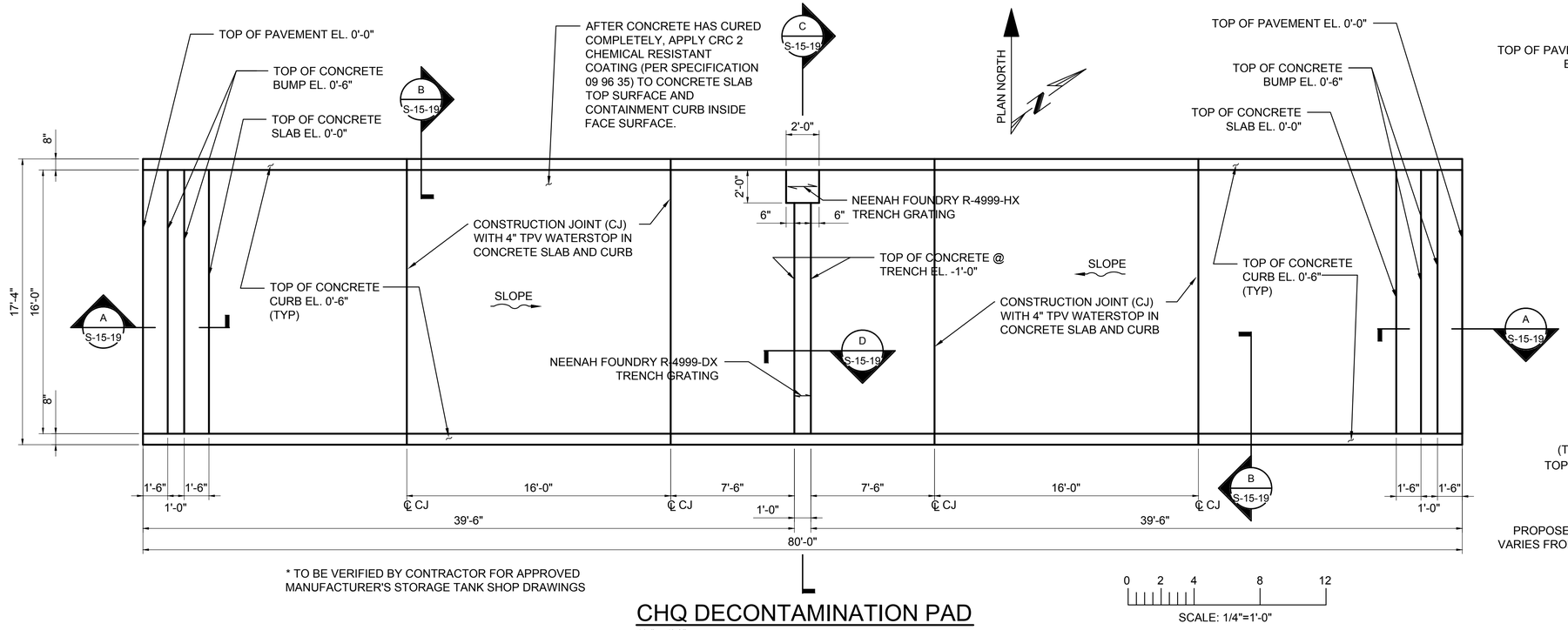

* TO BE VERIFIED BY CONTRACTOR FOR APPROVED MANUFACTURER'S STORAGE TANK SHOP DRAWINGS

CHQ DECONTAMINATION PAD

1/4" = 1'-0"

SCALE: 1/4"=1'-0"

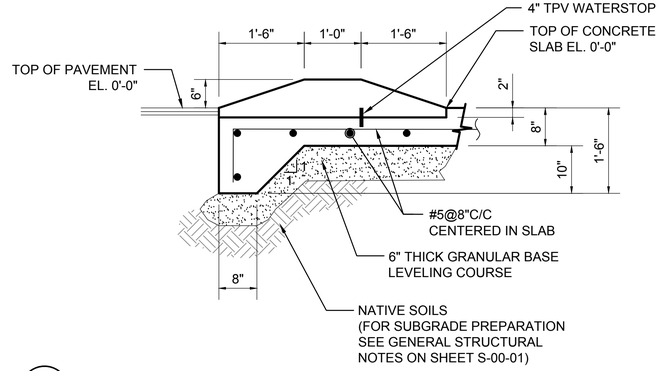

A SECTION

3/4" = 1'-0"

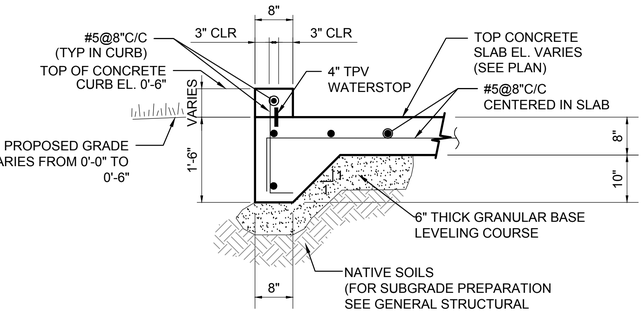

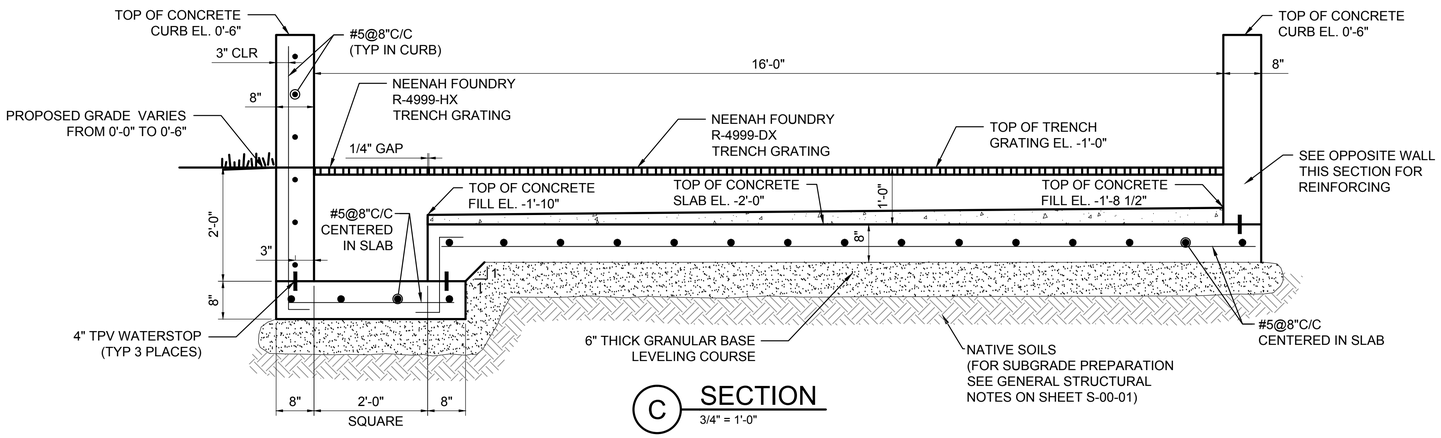

C SECTION

3/4" = 1'-0"

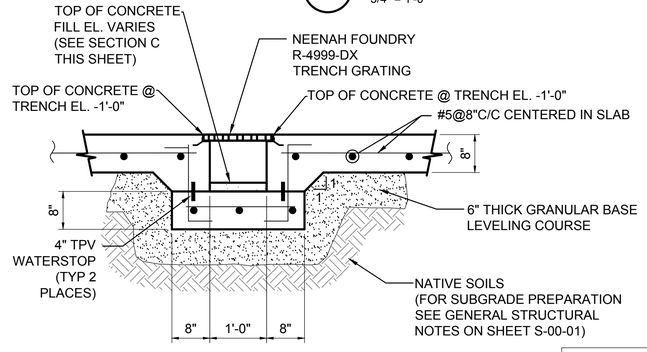

B SECTION

3/4" = 1'-0"

D SECTION

3/4" = 1'-0"

FOUNDATION NOTES:

- REFER TO THE GENERAL STRUCTURAL NOTES AND STRUCTURAL SPECIFICATIONS FOR ADDITIONAL REQUIREMENTS.
- FOUNDATION DESIGN IS BASED UPON 2,000 psf ALLOWABLE BEARING PRESSURE, IN CONFORMANCE WITH CBC TABLE 1806.2 FOR CLASSIFICATION(S) SW, SP, SM, SC, GM, AND/OR GC. A LICENSED GEOTECHNICAL ENGINEER SHALL INSPECT THE EXCAVATIONS AND CONFIRM THAT 2,000psf BEARING IS ALLOWED FOR THE FOUNDATIONS.

SCALE: 3/4"=1'-0"

SCALE: 1/4"=1'-0"

- FINAL DESIGN - FOR AGENCY APPROVAL ONLY

REGISTERED PROFESSIONAL ENGINEER MATTHEW S. LOWRY C61650 EXP. 9-30-17 CIVIL STATE OF CALIFORNIA

ETIC ENGINEERING

ARCADIS

NO.	DATE	DESCRIPTION	GM/SPEC	DWN	CHKD	SUPV	APVD BY
1	11/18/15	FINAL DESIGN	AJW	MSL	JPB	RAO	
0	2/2/15	SUPPLEMENTAL PRE-FINAL (90%) DESIGN	CMW	MSL	JPB	RAK	

REVISIONS

APPROVED BY	
RAO	SO
	SUPV
	DSGN
	DWN
	CHKD
	OK
	DATE
	SCALES

TOPOCK GROUNDWATER REMEDIATION PROJECT

DECONTAMINATION PAD PLANS AND DETAILS

GAS TRANSMISSION & DISTRIBUTION

PACIFIC GAS AND ELECTRIC COMPANY

SAN FRANCISCO, CALIFORNIA

MICROFILM	
BILL OF MATL	
DWG LIST	
SUPSDS	
SUPSD BY	
SHEET NO.	of SHEETS
S-15-20	REV 1

N1808

11/02/2015, 09:27, G:\Graphics\ARI\TOPOCK-01\Submittal_100%\DWG\as\S-Structural\S-15-20(DeconPad).dwg, Tab: S-15-20

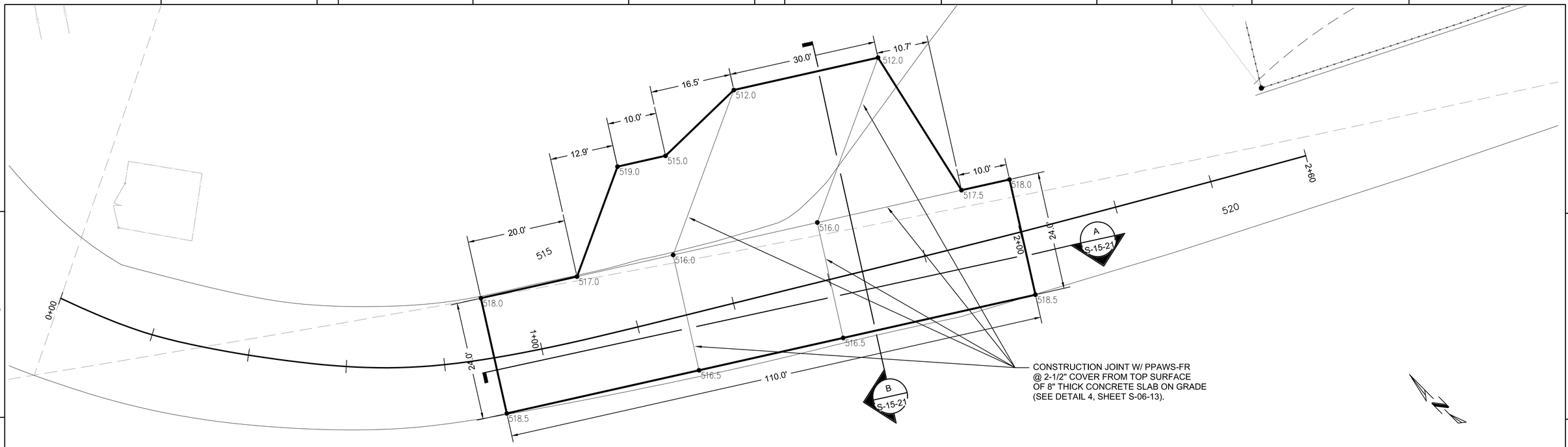

CHQ ENTRANCE ROAD - PLAN

(SCALE: 1" = 10')

0 10 20 30

HORIZ: SCALE: 1"=10'

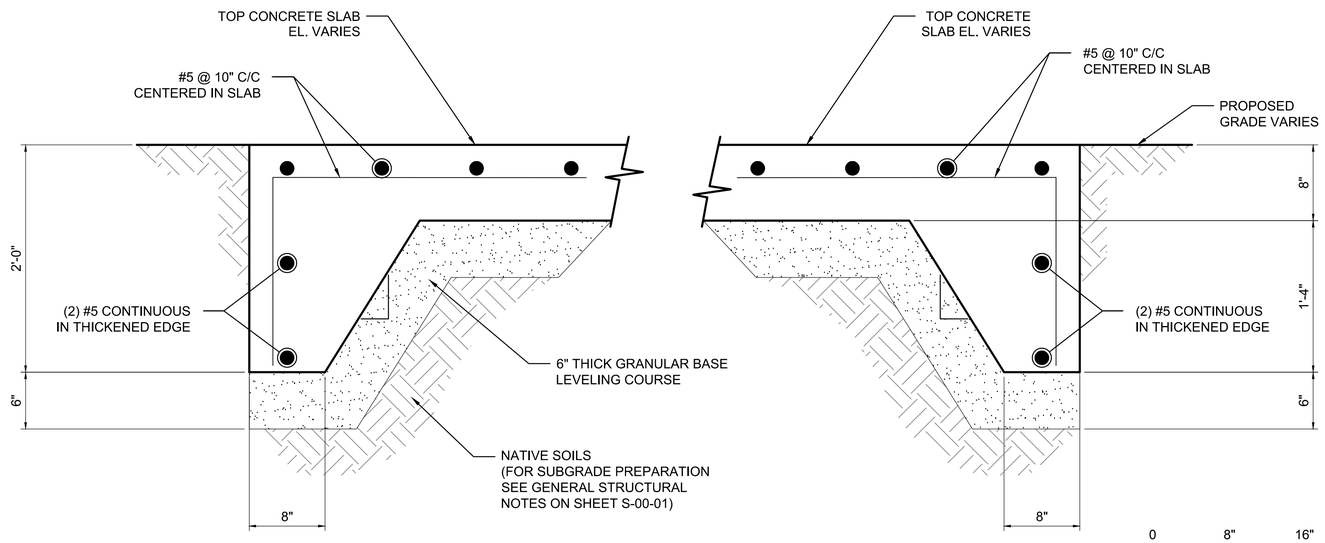

A B SECTIONS

1-1/2" = 1'-0"

S-15-21

0 8" 16" 24"

SCALE: 1-1/2"=1'-0"

- FINAL DESIGN -
FOR AGENCY
APPROVAL ONLY

REGISTERED PROFESSIONAL ENGINEER
MATTHEW S. LOWRY
C 61650
EXP. 9-30-17
CIVIL
STATE OF CALIFORNIA

ETIC ENGINEERING

ARCADIS

NO.	DATE	DESCRIPTION	GM/SPEC	DWN	CHKD	SUPV	APVD BY
1	11/18/15	FINAL DESIGN	AJW	MSL	JPB	RAO	
0	8/5/15	90% RTC RESOLUTION	AJW	MSL	JPB	JEF	

REVISIONS

APPROVED BY	
RAO	SO
	SUPV
	DSGN
	DWN
	CHKD
	OK
	DATE
	SCALES

TOPOCK GROUNDWATER REMEDIATION PROJECT

CHQ ENTRANCE ROAD-
PLAN AND SECTIONS

GAS TRANSMISSION & DISTRIBUTION

PACIFIC GAS AND ELECTRIC COMPANY
SAN FRANCISCO, CALIFORNIA

MICROFILM	
BILL OF MATL	
DWG LIST	
SUPSDS	
SUPSD BY	
SHEET NO. of SHEETS	
S-15-21	REV 1

N1808

11/02/2015, 09:25, G:\Graphics\AR\TOPOCK-01\Submittal_100%\DWGs\S-Structural\S-15-21.dwg, Tab: S-15-21

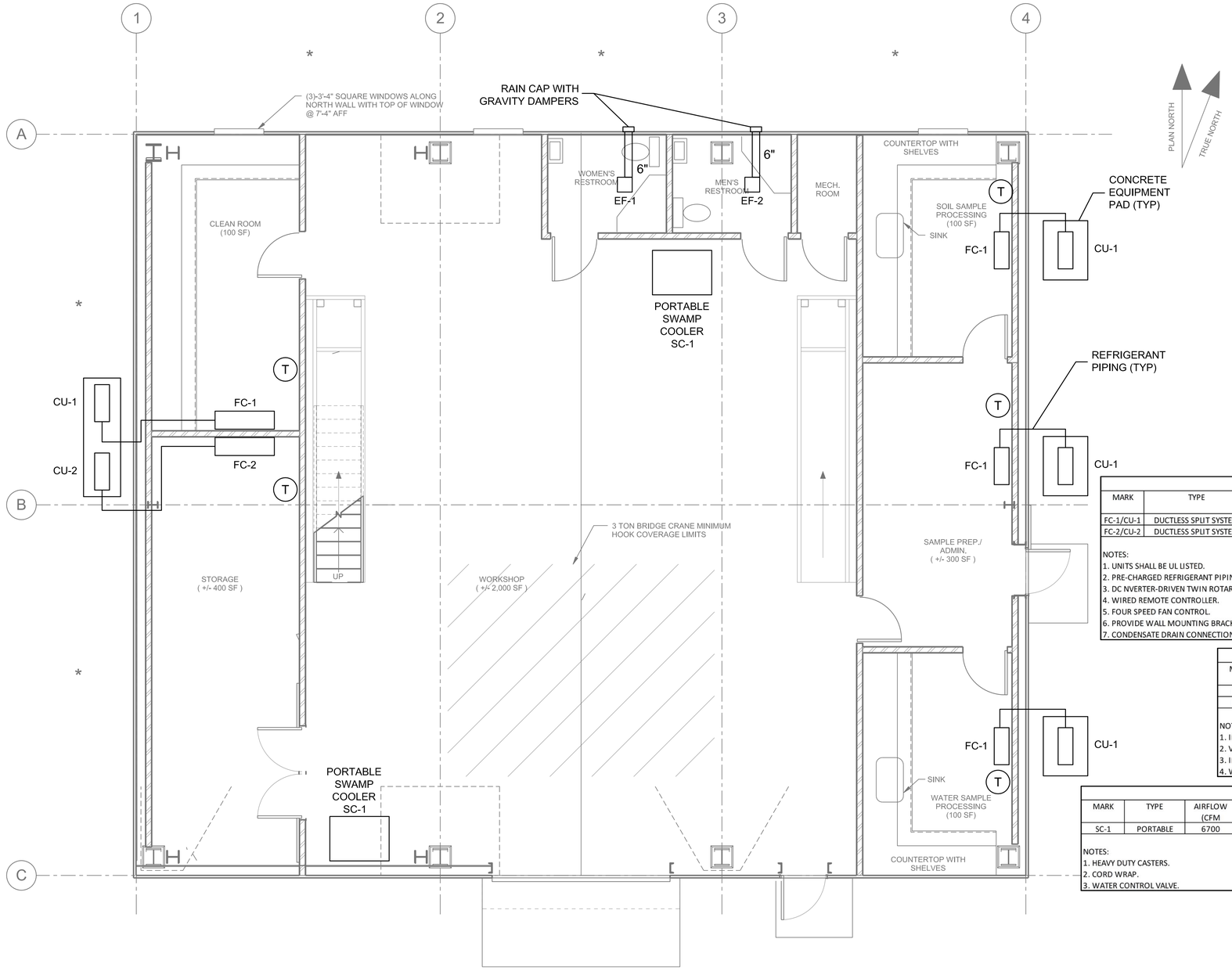

NOTES:
1. MOUNT BOTTOM OF FAN COIL UNITS (FC) 7'-0" AFF.
2. CONDENSATE PIPING FROM FAN COIL UNITS (FC) DISCHARGE TO EXTERIOR OF BUILDING.
3. MOUNT RESTROOM EXHAUST FANS FROM UNDERSIDE OF MEZZANINE. SHALL BE INTERLOCKED WITH LIGHT SWITCH.

DUCTLESS SPLIT SYSTEM HEAT PUMP SCHEDULE

MARK	TYPE	COOLING CAPACITY (BTUH)		HEATING CAPACITY (BTUH)		REFRIGERANT	ELECTRICAL	MANUFACTURER	MODEL		NOTES
		RATED	MINIMUM	RATED	MINIMUM		V/PH/HZ		FC	CU	
FC-1/CU-1	DUCTLESS SPLIT SYSTEM	9000	2800	10900	3000	R410A	230/1/60	MITSUBISHI	MSZ-FE09NA	MUZ-FE09NA	1,2,3,4,5,6,7
FC-2/CU-2	DUCTLESS SPLIT SYSTEM	12000	2800	13600	3000	R410A	230/1/60	MITSUBISHI	MSZ-FE12NA	MUZ-FE12NA	1,2,3,4,5,6,7

NOTES:
1. UNITS SHALL BE UL LISTED.
2. PRE-CHARGED REFRIGERANT PIPING.
3. DC NVERTER-DRIVEN TWIN ROTARY COMPRESSOR.
4. WIRED REMOTE CONTROLLER.
5. FOUR SPEED FAN CONTROL.
6. PROVIDE WALL MOUNTING BRACKET FOR INDOOR UNIT.
7. CONDENSATE DRAIN CONNECTION FOR DISCHARGE TO EXTERIOR OF BUILDING.

EXHAUST FAN SCHEDULE

MARK	TYPE	AIRFLOW (CFM)	E.S.P. (INCHES W.C.)	DRIVE	ELECTRICAL		MANUFACTURER	MODEL	NOTES
					W	V/PH/HZ			
EF-1	CEILING CENTRIFUGAL	100	0.25	DIRECT	38	115/1/60	LOREN COOK	GC-148	1,2,3,4
EF-2	CEILING CENTRIFUGAL	100	0.25	DIRECT	38	115/1/60	LOREN COOK	GC-148	1,2,3,4

NOTES:
1. INTEGRAL NEMA 3R DISCONNECT SWITCH.
2. VIBRATION ISOLATORS.
3. INTEGRAL MOUNTED SOLID STATE SPEED CONTROLLER.
4. WALL CAP WITH GRAVITY BACKDRAFT DAMPER.

SWAMP COOLER SCHEDULE

MARK	TYPE	AIRFLOW (CFM	COOLING CAPACITY (SQFT)	WATER RESERVOIR CAPACITY (GALLONS)	FAN SPEED	UNIT DIMENSIONS (HxWxD)	WEIGHT (LBS)	POWER V/PH/HZ	MANUFACTUER	MODEL	NOTES
SC-1	PORTABLE	6700	1800	14	VARIABLE	53"x50"x25"	155	115/1/60	PORT-A-COOL	PAC2K24HPVS	1,2,3

NOTES:
1. HEAVY DUTY CASTERS.
2. CORD WRAP.
3. WATER CONTROL VALVE.

1 HVAC PLAN
1/4"=1'-0"

THESE DESIGN DEVELOPMENT DRAWINGS ARE BEING SUBMITTED SOLELY IN CONNECTION WITH A CALIFORNIA DEPARTMENT OF TOXIC SUBSTANCES CONTROL ENVIRONMENTAL REVIEW REQUIREMENT FOR DESIGN INTENT AND ARE NOT INTENDED FOR OR BEING OFFERED FOR ANY OTHER PURPOSE OR USE. IN NO EVENT ARE SUCH DESIGN DEVELOPMENT DOCUMENTS TO BE USED FOR CONSTRUCTION OR PERMITTING.

- FINAL DESIGN - FOR AGENCY APPROVAL ONLY

TO BE STAMPED AFTER RECEIPT OF STAMPED VENDOR DESIGN

CALLISONRTKL A DESIGN CONSULTANCY OF ARCADIS

ARCADIS

NO.	DATE	DESCRIPTION	GM/SPEC	DWN	CHKD	SUPV	APVD BY
1	11/18/15	FINAL DESIGN	JMH	HS	HS	RAO	
0	2/2/15	SUPPLEMENTAL PRE-FINAL (90%) DESIGN	AJW	JPB	JPB	JEF	

REVISIONS

APPROVED BY: RAO

SO	
SUPV	JPB
DSGN	JPB
DWN	AJW
CHKD	JPB
OK	JEF
DATE	11/18/2015
SCALES	AS SHOWN

TOPOCK GROUNDWATER REMEDIATION PROJECT

WORKSHOP BUILDING - HVAC PLAN

GAS TRANSMISSION & DISTRIBUTION
PACIFIC GAS AND ELECTRIC COMPANY
SAN FRANCISCO, CALIFORNIA

MICROFILM	
BILL OF MATL	
DWG LIST	
SUPSDS	
SUPSD BY	
SHEET NO.	of SHEETS
M-15-01	REV 1

N1808

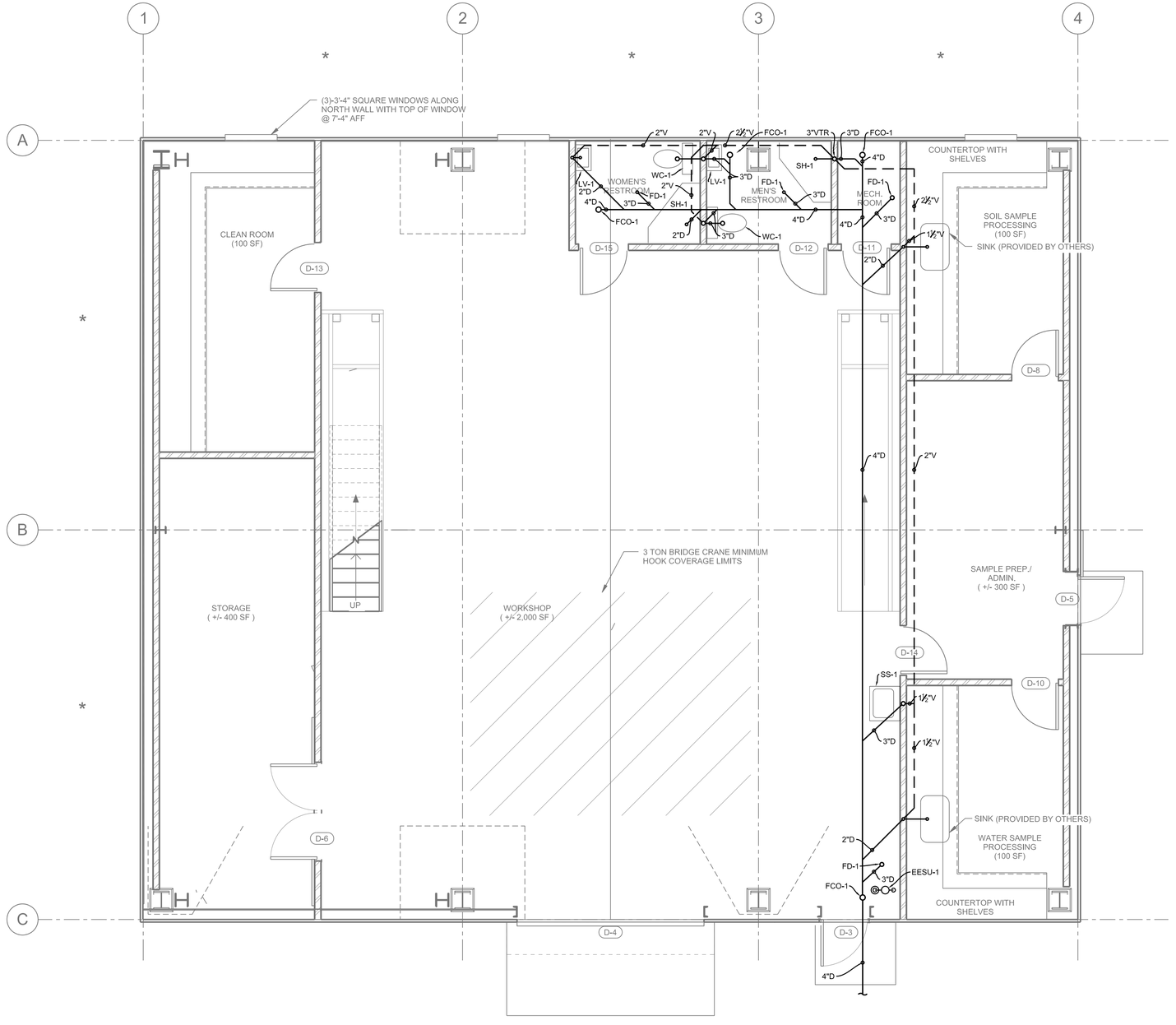

1 PLUMBING FLOOR PLAN - DWV
1/4"=1'-0"

PLAN NORTH
TRUE NORTH

PLUMBING FIXTURE LOADING

MARK	DESCRIPTION	QTY	WATER SUPPLY WFU	TOTAL WATER SUPPLY WFU	WATER SUPPLY GPM	TOTAL WATER SUPPLY GPM	DRAINAGE DFU	TOTAL DRAINAGE DFU
WC-1	WATER CLOSET (TANK TYPE)	2	4	8			5	10
LV-1	LAVATORY	2	1	2			1	2
SH-1	SHOWER	2	4	8			2	4
FD-1	FLOOR DRAIN	4					2	8
LAB SINK	LAB SINK	2	2	4			2	4
SS-1	SERVICE SINK	1	3	3			2	2
EESU-1	EMERGENCY EYEWASH AND SHOWER UNIT	1			20.4	20.4		
	TOTAL FIXTURE LOADING			25	18	20.4		30
	TOTAL DEMAND LOADING				38.4			

NOTES:
USE 1-1/2" BUILDING DOMESTIC WATER WITH TOTAL DEMAND OF 38.4 GPM.

DFU BASED ON UPC 2013 TABLE 7-5 MAXIM UNIT LOADING FOR HORIZONTAL PIPING AT 1/4" = 1'-0" SLOPE AND MAXIMUM UNITS FOR VENT PIPING.

PLUMBING FIXTURE SCHEDULE

MARK	DESCRIPTION	CW SIZE	HW SIZE	MINIMUM TRAP/ TRAP ARM SIZE	VENT SIZE
WC-1	WATER CLOSET: ANSI/ASME112.19.2,FLOOR MOUNTED, SIPHON ACTION, VITREOUS CHINA, 18 INCHES HIGH CLOSE-COUPLED CLOSET COMBINATION WITH ELONGATED RIM, VITREOUS CHINA CLOSET TANK WITH FITTINGS AND LEVER FLUSHING VALVE, BOLT CAPS, AMERICAN STANDARD, CADET PRO MODEL 215AA.004. SOLID WHITE PLASTIC, OPEN FRONT, EXTENDED BACK, SELF-SUSTAINING HINGE, BRASS BOLTS, WITHCUT COVER, OLSONITE, MODEL NO. 95.	1/2"		3"	2"
LV-1	LAVATORY: ANSI/ASME A112.19.2, VITREOUS CHINA WALL-HUNG LAVATORY 20-1/2 BY 18-1/4 INCH MINIMUM, WITH 4 INCH HIGH BACK, DRILLINGS ON 4 INCH CENTERS, RECTANGULAR BASIN WITH SPLASH LIP, FRONT OVERFLOW, SELF-DRAINING DECK, AND CONCEALED ARM SUPPORTS, AMERICAN STANDARD MODEL LUCERNE 0335.012. ASME A112.18.1; 4 INCH CENTERS, 3-1/2 INCH SPOUT, SINGLE LEVER, CHROME-PLATED COMBINATION SUPPLY FITTING WITH POP-UP WASTE, WATER ECONOMY AERATOR, 1-1/4 INCH CHROME-PLATED 17 GAGE BRASS TAILPIECE AND P-TRAP WITH CLEAN-OUT PLUG AND ARM WITH ESCUTCHEON, CHROME-BRASS KEYED ANGLE STOPS, CHROME METAL EXPOSED SUPPLY PIPING, AND CHROME METAL SUPPLY AND WASTE ESCUTCHEON PLATES, AMERICAN STANDARD, MODEL CERAMIX 2000-101-002. PROVIDE POWERS PROCESS CONTROLS, MODEL HYDROGUARD SERIES 480, UNDERCOUNTER MIXING VALVE FOR POINT OF USE AT LAVATORIES. BODY CONSTRUCTED OF SOLD BRASS WITH CORROSION RESISTANT, STANILESS STEEL INTERNAL COMPONENTS. WAX ELEMENT SENSES AND COMPENSATES FOR TEMPERATURE AND PRESSURE FLUCTUATIONS IN THE SUPPLY LINE.	1/2"	1/2"	1-1/2"	1-1/2"
SH-1	SIZE 39 BY 39 BY 82 INCHES, CORNER UNIT, SANDWICH PANEL CONSTRUCTION, INNER AND OUTER SURFACES OF GALVANIZED-BONDERIZED STEEL, FINISHED IN WHITE SYNTHETIC BAKED-ON ENAMEL. SHOWER WALLS TO BE REINFORCED TO RECEIVE ALL ACCESSORIES. PANELS JOINED WITH ANODIZED ALUMINUM EXTRUDED MOLDING, CORE CONSTRUCTED OF WATER IMPERVIOUS ADHESIVE, TOP FRAME OF ONE-PIECE TUBULAR CONSTRUCTION WELDED TOGETHER. ALL FIELD-ASSEMBLED JOINTS OF DOUBLE BARRIER TYPE TO ENSURE LEAK-PROOF CONNECTIONS. BRASS CHROMIUM-PLATED BRACKETS, STAINLESS STEEL CURTAIN ROD, CURTAIN, AND BRASS SOAP DISH INCLUDED. ONE-PIECE SHOWER FLOOR, 6 INCH HIGH TERRAZZO OF WHITE CEMENT, BLACK AND WHITE MARBLE CHIPS. TILING FLANGE CAST INTEGRAL OF GALVANIZED-BONDERIZED STEEL AND EXTEND NOT LESS THAN 1-1/2 INCHES ABOVE SHOULDER. SHOULDER NOT LESS THAN 4 INCHES HIGH INSIDE AND NOT LESS THAN 3 INCHES WIDE. STAINLESS STEEL CAST INTEGRAL DRAIN BODY; PROVIDE FOR A CALKED LEAD CONNECTION NOT LESS THAN 1 INCH DEEP TO A 2 INCH PIPE. TRIM AND ACCESSORIES: ANSI/ASME A-117.1; MODEL 190AA PRESSURE BALANCED MIXING VALVE WITH STOPS. WALL CONNECTION WITH FLANGE AND TWO WALL HCOKS. ONE WRAP AROUND GRAB BAR AND ONE STRAIGHT GRAB BAR FOR VERTICAL INSTALLATION; EACH GRAB BAR BEING 1-1/2 INCH OR 1-1/4	1/2"	1/2"	2"	1-1/2"
FD-1	J.R. SMITH MFG. CO., MODEL 2696 PER DIVISION 22 SPECIFICATIONS.			2" & 3"	1-1/2"
FCO-1	J.R. SMITH MFG. CO., MODEL 4103S PER DIVISION 22 SPECIFICATIONS.			3" & 4"	
SS-1	SERVICE SINK: ANSI/ASME A112.19.1; 19-7/8 BY 16-3/8 BY 10-1/2 INCH DEEP, PORCELAIN ENAMELED (INSIDE ONLY) CAST IRON ROLL-RIM SINK, WITH 10-1/2 INCH HIGH BACK, CONCEALED HANGER, CHROME-PLATED STRAINER, CAST IRON P-TRAP WITH ADJUSTABLE FLOOR FLANGE, RIM GUARD, AMERICAN STANDARD, MODEL AKRON 7695.008. ASME A112.18.1; EXPOSED WALL TYPE SUPPLY WITH BRASS LEVER HANDLES, VACUUM BREAKER, HOSE END SPOUT, STRAINERS, ECCENTRIC ADJUSTABLE INLETS, STOPS IN SHANKS, AND ADJUSTABLE THREADED WALL FLANGES, ROUGH CHROME FINISH, AMERICAN STANDARD, MODEL 8341.076.	1/2"	1/2"	3"	1-1/2"
EESU-1	HAWS DRINKING FAUCET COMPANY, MODEL 8336 PER DIVISION 22 SPECIFICATIONS.	3/4"	3/4"		

WATER HEATER SCHEDULE

MARK	TYPE	MANUFACTURER	MODEL	CAPACITY GALLONS	RECOVERY GPH	TEMPERATURE RISE °F	ELEMENTS KW	POWER V/PH/HZ	NOTES
WH-1	ELECTRIC STORAGE	LOCHINVAR	ETP066KD	66	38	100	2 - 4.5 KW EACH	240/1/60	1,2,3,4

NOTES:
1. FACTORY INSTALLED ASME TEMPERATURE AND PRESSURE RELIEF VALVE.
2. ELEMENTS SHALL BE WIRED FOR SIMULTANEOUS OPERATION.
3. UL LISTED GLASS LINED TANK WITH FOAM INSULATION, DRAIN VALVE, AND ANODE ROD.
4. AUTOMATIC OVERHEAT PROTECTION SAFETY CONTROL AND ADJUSTABLE THERMOSTATIC CONTROL.

- FINAL DESIGN - FOR AGENCY APPROVAL ONLY

TO BE STAMPED AFTER RECEIPT OF STAMPED VENDOR DESIGN

CALLISONRTKL A DESIGN CONSULTANCY OF ARCADIS

ARCADIS

NO.	DATE	DESCRIPTION	GM/SPEC	DWN	CHKD	SUPV	APVD BY
1	11/18/15	FINAL DESIGN		JMH	HS	HS	RAO
0	2/2/15	SUPPLEMENTAL PRE-FINAL (90%) DESIGN		AJW	JPB	JPB	JEF

REVISIONS

APPROVED BY: RAO

SO	
SUPV	JPB
DSGN	JPB
DWN	AJW
CHKD	JPB
OK	JEF
DATE	11/18/15
SCALES	AS SHOWN

TOPOCK GROUNDWATER REMEDIATION PROJECT

PLUMBING FLOOR PLAN - DWV

GAS TRANSMISSION & DISTRIBUTION
PACIFIC GAS AND ELECTRIC COMPANY
SAN FRANCISCO, CALIFORNIA

MICROFILM	
BILL OF MATL	
DWG LIST	
SUPSDS	
SUPSD BY	
SHEET NO.	of SHEETS
P-15-01	REV 1

N1808

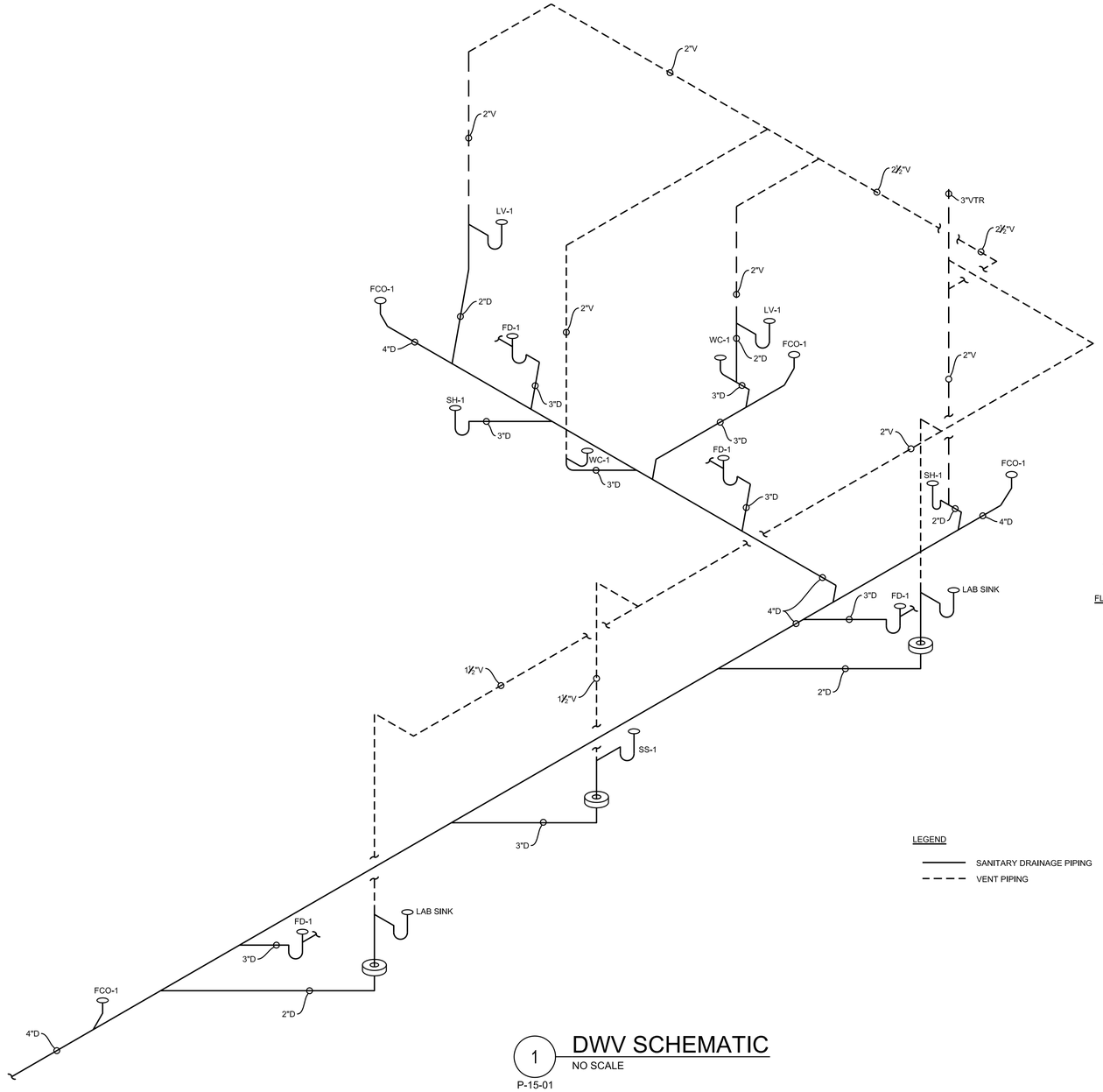

1 DWV SCHEMATIC
NO SCALE
P-15-01



FLOOR DRAIN/TRAP PRIMER

LEGEND

SANITARY DRAINAGE PIPING

VENT PIPING

- FINAL DESIGN - FOR AGENCY APPROVAL ONLY

TO BE STAMPED AFTER RECEIPT OF STAMPED VENDOR DESIGN

CALLISONRTKL A DESIGN CONSULTANCY OF ARCADIS

ARCADIS

NO.	DATE	DESCRIPTION	GM/SPEC	DWN	CHKD	SUPV	APVD BY
1	11/18/15	FINAL DESIGN		JMH	HS	HS	RAO
0	2/2/15	SUPPLEMENTAL PRE-FINAL (90%) DESIGN		AJW	JPB	JPB	JEF

REVISIONS

APPROVED BY	RAO
SO	
SUPV	JPB
DSGN	JPB
DWN	AJW
CHKD	JPB
OK	JEF
DATE	11/18/15
SCALES	AS SHOWN

TOPOCK GROUNDWATER REMEDIATION PROJECT

PLUMBING SCHEMATIC - DWV

GAS TRANSMISSION & DISTRIBUTION
PACIFIC GAS AND ELECTRIC COMPANY
SAN FRANCISCO, CALIFORNIA

MICROFILM	
BILL OF MATL	
DWG LIST	
SUPSDS	
SUPSD BY	
SHEET NO.	of SHEETS
P-15-02	REV 1

N1808

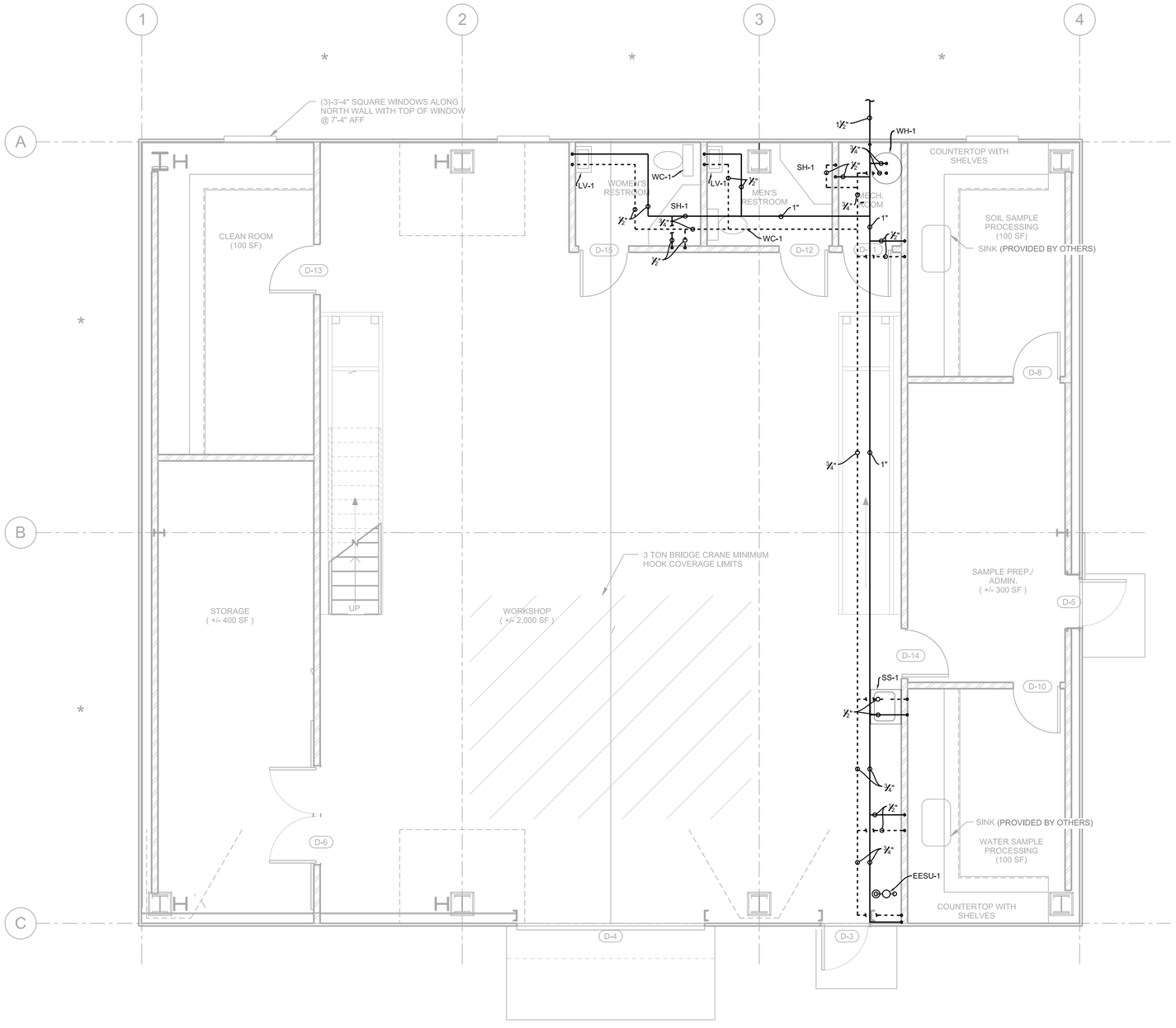

1 PLUMBING FLOOR PLAN - DOMESTIC HOT AND COLD WATER

1/4"=1'-0"

- FINAL DESIGN - FOR AGENCY APPROVAL ONLY

TO BE STAMPED AFTER RECEIPT OF STAMPED VENDOR DESIGN

CALLISONRTKL A DESIGN CONSULTANCY OF ARCADIS

ARCADIS

NO.	DATE	DESCRIPTION	GM/SPEC	DWN	CHKD	SUPV	APVD BY
1	11/18/15	FINAL DESIGN		JMH	HS	HS	RAO
0	2/2/15	SUPPLEMENTAL PRE-FINAL (90%) DESIGN		AJW	JPB	JPB	JEF

REVISIONS

APPROVED BY: RAO

SO	
SUPV	JPB
DSGN	JPB
DWN	AJW
CHKD	JPB
OK	JEF
DATE	11/18/15
SCALES	AS SHOWN

TOPOCK GROUNDWATER REMEDIATION PROJECT

PLUMBING FLOOR PLAN- DOMESTIC HOT AND COLD WATER

GAS TRANSMISSION & DISTRIBUTION
PACIFIC GAS AND ELECTRIC COMPANY
SAN FRANCISCO, CALIFORNIA

MICROFILM	
BILL OF MATL	
DWG LIST	
SUPSDS	
SUPSD BY	
SHEET NO.	of SHEETS
P-15-03	REV 1

N1808

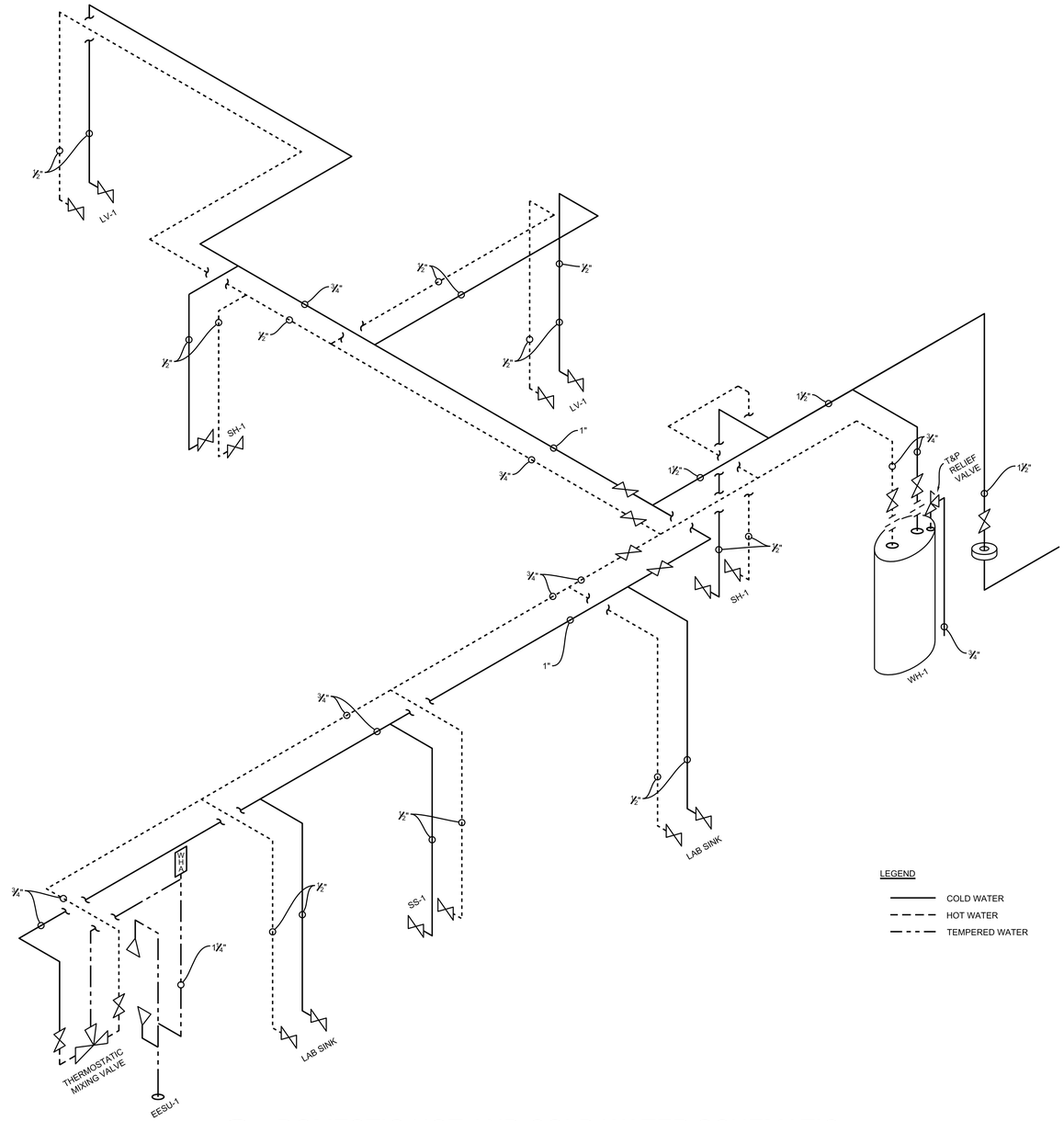

1 DOMESTIC HOT AND COLD WATER SCHEMATIC
NO SCALE
P-15-01

- FINAL DESIGN - FOR AGENCY APPROVAL ONLY

TO BE STAMPED AFTER RECEIPT OF STAMPED VENDOR DESIGN

CALLISONRTKL A DESIGN CONSULTANCY OF ARCADIS

ARCADIS

NO.	DATE	DESCRIPTION	GM/SPEC	DWN	CHKD	SUPV	APVD BY
1	11/18/15	FINAL DESIGN	JMH	HS	HS	RAO	
0	2/2/15	SUPPLEMENTAL PRE-FINAL (90%) DESIGN	AJW	JPB	JPB	JEF	

REVISIONS

APPROVED BY: RAO

SO
SUPV JPB
DSGN JPB
DWN AJW
CHKD JPB
OK JEF
DATE 11/18/15
SCALES AS SHOWN

TOPOCK GROUNDWATER REMEDIATION PROJECT

PLUMBING SCHEMATIC- DOMESTIC HOT AND COLD WATER

GAS TRANSMISSION & DISTRIBUTION
PACIFIC GAS AND ELECTRIC COMPANY
SAN FRANCISCO, CALIFORNIA

MICROFILM
BILL OF MATL
DWG LIST
SUPSDS
SUPSD BY
SHEET NO. of SHEETS

P-15-04 | REV 1

N1808

LEGEND:

6" FIRE SUPPRESSION WATER LINE

FIRE PROTECTION REQUIREMENTS:

FIRE PROTECTION LINE FLOW AND PRESSURE REQUIREMENTS ARE AS FOLLOWS:
750 GPM FOR 60 MINUTES (45,000 GALLONS AVAILABLE) AT A LINE PRESSURE OF 50 PSI

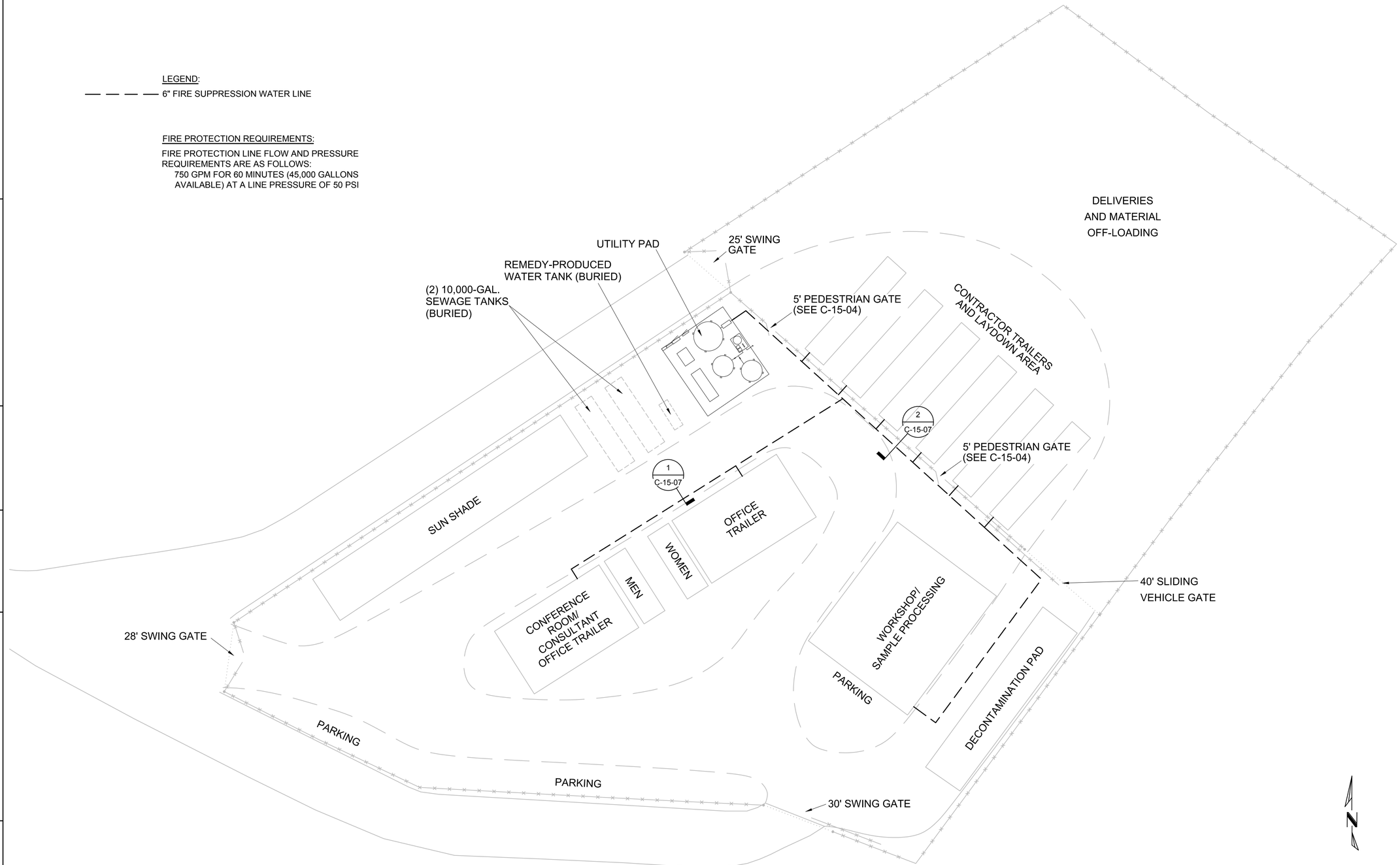

0 20' 40' 60'

SCALE: 1"=20'

- FINAL DESIGN -
FOR AGENCY
APPROVAL ONLY

LICENSED FIRE PROTECTION CONTRACTOR
CLASSIFICATION C-16
LICENSE No. 570970
STATE OF CALIFORNIA

ETIC ENGINEERING

ARCADIS

NO.	DATE	DESCRIPTION	GM/SPEC	DWN	CHKD	SUPV	APVD BY
2	11/18/15	FINAL DESIGN		TPH	TPH	JJA	RAO
1	8/5/15	90% RTC RESOLUTION		AJW	JMS	JPB	JEF
0	2/2/15	SUPPLEMENTAL PRE-FINAL (90%) DESIGN		AJW	JMS	JPB	JEF

REVISIONS

APPROVED BY	
	SO
RAO	SUPV
	DSGN
	DWN
	CHKD
	OK
	DATE
	SCALES

TOPOCK GROUNDWATER REMEDIATION PROJECT

CONSTRUCTION HEADQUARTERS FIRE SUPPRESSION YARD PLAN

GAS TRANSMISSION & DISTRIBUTION

PACIFIC GAS AND ELECTRIC COMPANY
SAN FRANCISCO, CALIFORNIA

MICROFILM	
BILL OF MATL	
DWG LIST	
SUPSDS	
SUPSD BY	
SHEET NO. of	SHEETS
F-15-01	REV 1

N1808

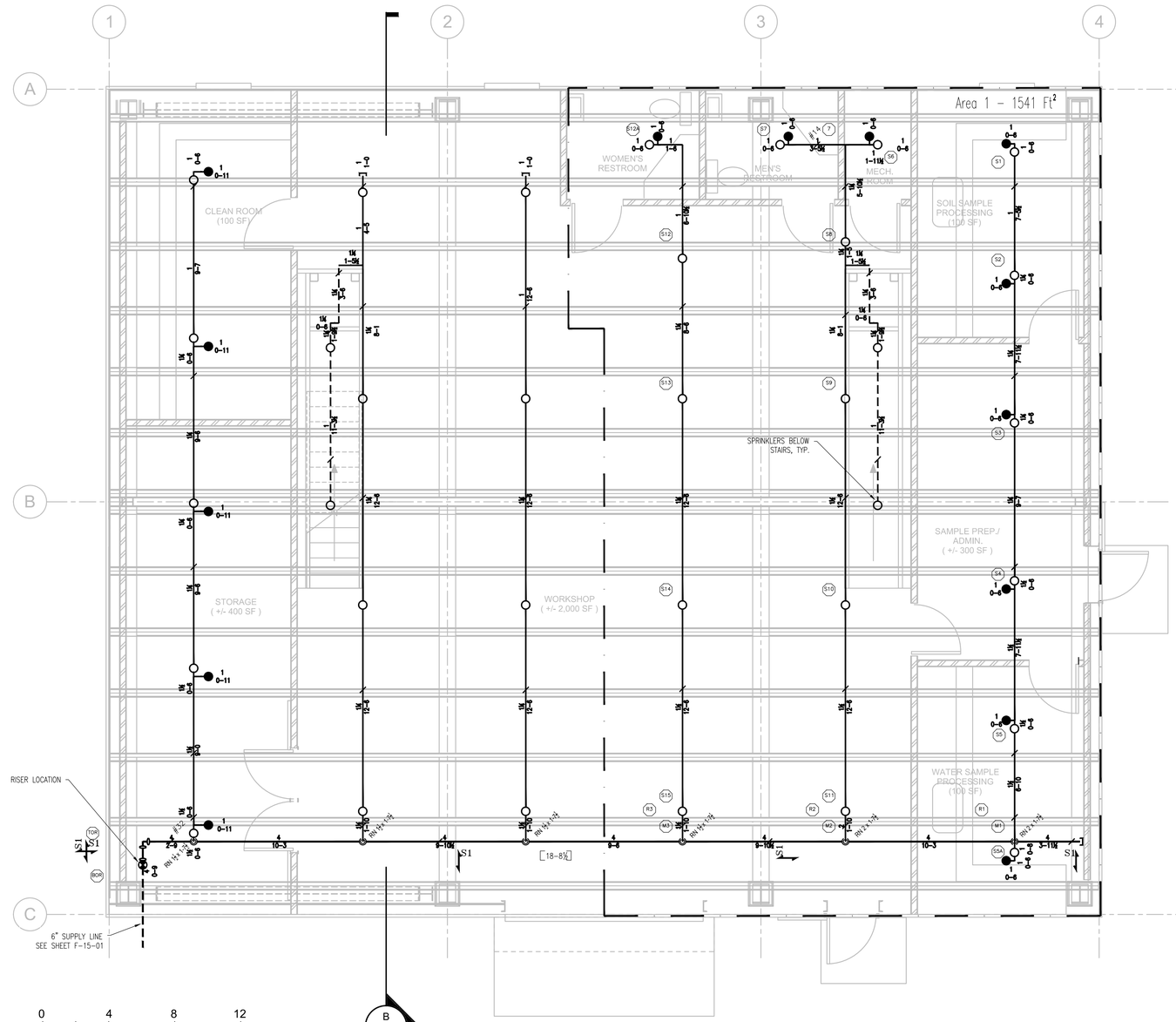

A WORKSHOP PLAN

1/4" = 1'-0"

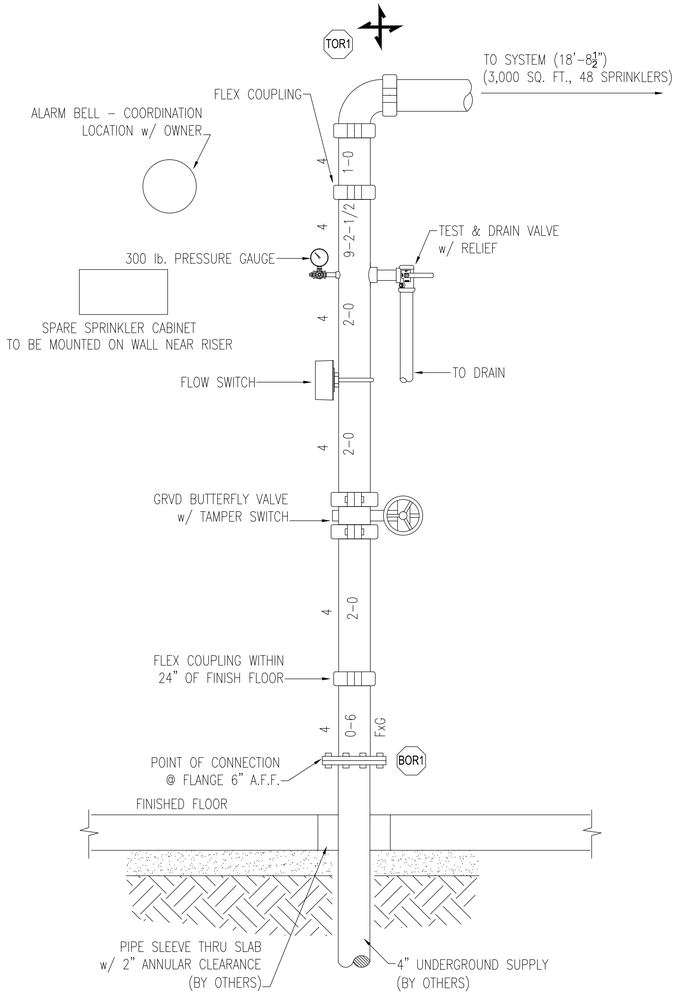

FIRE SPRINKLER RISER DETAIL

NO SCALE

CALCULATION DESIGN INFORMATION

SYSTEM or AREA No.	ONE
QUICK RESPONSE SPRINKLERS?	YES
SYSTEM TYPE	WET
K-FACTOR	8.0
HAZARD	ORD. GP. 2
DENSITY (GPM/FT²)	.20
AREA PER SPRINKLER (FT²)	128
AREA OF OPERATION (FT²)	1500
AREA OF OPERATION ADJUSTED AS FOLLOWS:	
DRY PIPE INCREASE (30%)	N/A
SLOPE >2:12 INCREASE (30%)	N/A
CEILING HEIGHT:	N/A
% REDUCTION:	N/A
CEILING HEIGHT REDUCTION (FT²)	N/A
ADJ. AREA OF OPERATION (FT²)	1500

WATER SUPPLY

STATIC (PSI)	N/A
RESIDUAL (PSI)	N/A
FLOW (GPM)	N/A
PUMP (GPM @ PSI)	N/A @ N/A

SYSTEM DEMAND

REQUIRED AT: BASE OF RISER

PSI REQUIRED	43.372
GPM REQUIRED	499.353
PSI AVAILABLE	N/A
GPM AVAILABLE	N/A
SAFETY MARGIN	N/A
HOSE STREAM DEMAND (GPM):	
INSIDE: N/A – OUTSIDE:	250
LOCATION:	WORKSHOP

SPRINKLERS

SYM	CNT	ORIF, K-FACTOR	NPT	MFG.	TEMP	FINISH	RESPONSE-STYLE	S.I.N.	MODEL#	ESCUTCHEON
○	34	(17/32",K=8.0)	3/4"	VKG	200	BRASS	SR - SSU	VK200	MMATIC	N/A
◉	14	(17/32",K=8.0)	3/4"	VKG	155	CHRM	SR - SSP	VK202	MMATIC	WHT E-1 RECESSED

48 = TOTAL SPRINKLERS THIS SHEET

PIPING PLAN

1. AT OBSTRUCTED CONSTRUCTION SPRINKLER DEFLECTOR SHALL NOT EXCEED 6" BELOW THE BOTTOM OF THE FRAMING. (DEFLECTOR SHALL NOT EXCEED 22" BELOW THE DECK.)
2. MAIN PIPING SHALL HANG AT 18'-8½" AFF. LINE PIPING SHALL HANG AT 6" BOTTOM OF FRAMING.
3. MAIN HANGERS SHALL BE (#7) C-CLAMP W/ RETAINER STRAP. LINE HANGERS SHALL BE (#4) SIDE BEAM BRACKET. (SEE DETAILS)
4. MAIN PIPING SHALL BE SCHEDULE 10 STEEL (THINWALL) AND SHALL BE ROLL GROOVED PER NFPA 13. LINE PIPING SHALL BE SCHEDULE 40 STEEL (STANDARD) AND SHALL BE GROOVED OR THREADED PER NFPA.

- FINAL DESIGN - FOR AGENCY APPROVAL ONLY

LICENSED FIRE PROTECTION CONTRACTOR — CLASSIFICATION C-16 — LICENSE No. 570970 — STATE OF CALIFORNIA

MARQUEE FIRE PROTECTION
710 W. Stadium Lane
Sacramento, CA. 95834-1130
TEL. 916. 641-7997 / 707. 642-7905
FAX. 916. 641-0775
CA. LIC. 570970 C-16

ARCADIS

NO.	DATE	DESCRIPTION	GM/SPEC	DWN	CHKD	SUPV	APVD BY
2	11/18/15	FINAL DESIGN		TPH	TPH	JJA	RAO
1	8/5/15	90% RTC RESOLUTION		AJW	JMS	JPB	JEF
0	2/2/15	SUPPLEMENTAL PRE-FINAL (90%) DESIGN		AJW	JMS	JPB	JEF

REVISIONS

APPROVED BY: RAO

SO, SUPV, DSGN, DWN, CHKD, OK, DATE, SCALES

TOPOCK GROUNDWATER REMEDIATION PROJECT

WORKSHOP FIRE PROTECTION PLAN (1 OF 2)

GAS TRANSMISSION & DISTRIBUTION
PACIFIC GAS AND ELECTRIC COMPANY
SAN FRANCISCO, CALIFORNIA

MICROFILM
BILL OF MATL
DWG LIST
SUPSDS
SUPSD BY
SHEET NO. F-15-02 of SHEETS
REV 2

N1808

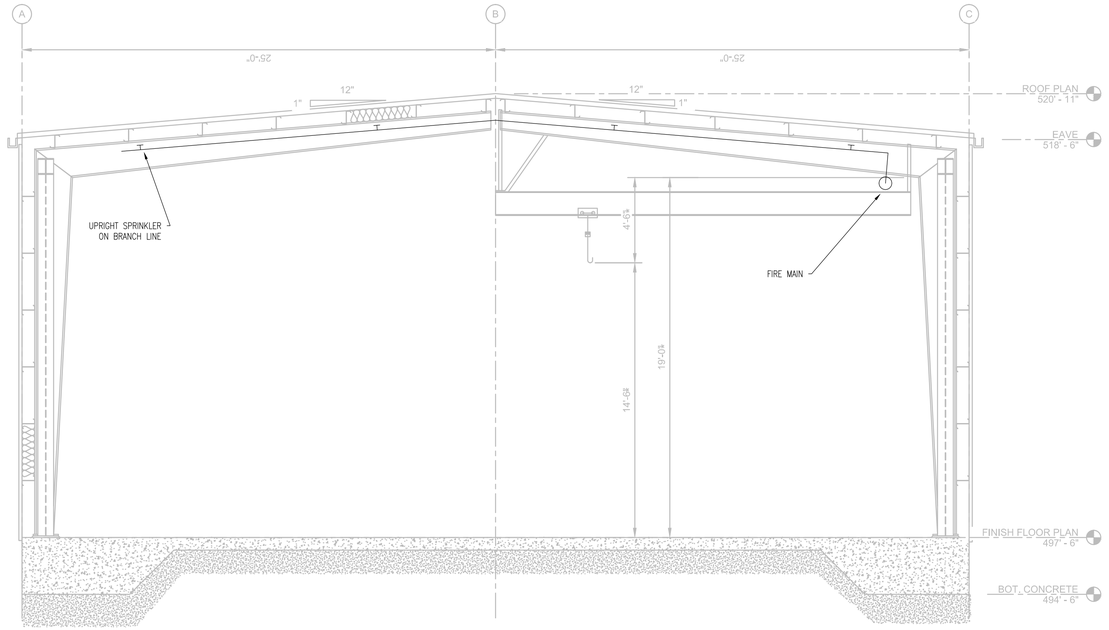

0 4 8 12

SCALE: 1/4"=1'-0"

B BUILDING SECTION

1/4" = 1'-0"

F-15-02

- FINAL DESIGN - FOR AGENCY APPROVAL ONLY

LICENSED FIRE PROTECTION CONTRACTOR
CLASSIFICATION C-16
LICENSE No. 570970
STATE OF CALIFORNIA

MARQUEE
FIRE PROTECTION
710 W. Stadium Lane
Sacramento, CA. 95834-1130
TEL. 916. 641-7997 / 707. 642-7905
FAX. 916. 641-0775
CA. LIC. 570970 C-16

ARCADIS

NO.	DATE	DESCRIPTION	GM/SPEC	DWN	CHKD	SUPV	APVD BY
2	11/18/15	FINAL DESIGN		TPH	TPH	JJA	RAO
1	8/5/15	90% RTC RESOLUTION		AJW	JMS	JPB	JEF
0	2/2/15	SUPPLEMENTAL PRE-FINAL (90%) DESIGN		AJW	JMS	JPB	JEF

REVISIONS

APPROVED BY: RAO

SO | SUPV | DSGN | DWN | CHKD | OK | DATE | SCALES

TOPOCK GROUNDWATER REMEDIATION PROJECT

WORKSHOP FIRE PROTECTION PLAN (2 OF 2)

GAS TRANSMISSION & DISTRIBUTION
PACIFIC GAS AND ELECTRIC COMPANY
SAN FRANCISCO, CALIFORNIA

MICROFILM | BILL OF MATL | DWG LIST | SUPSDS | SUPSD BY

SHEET NO. F-15-03 of SHEETS | REV 1

N180B

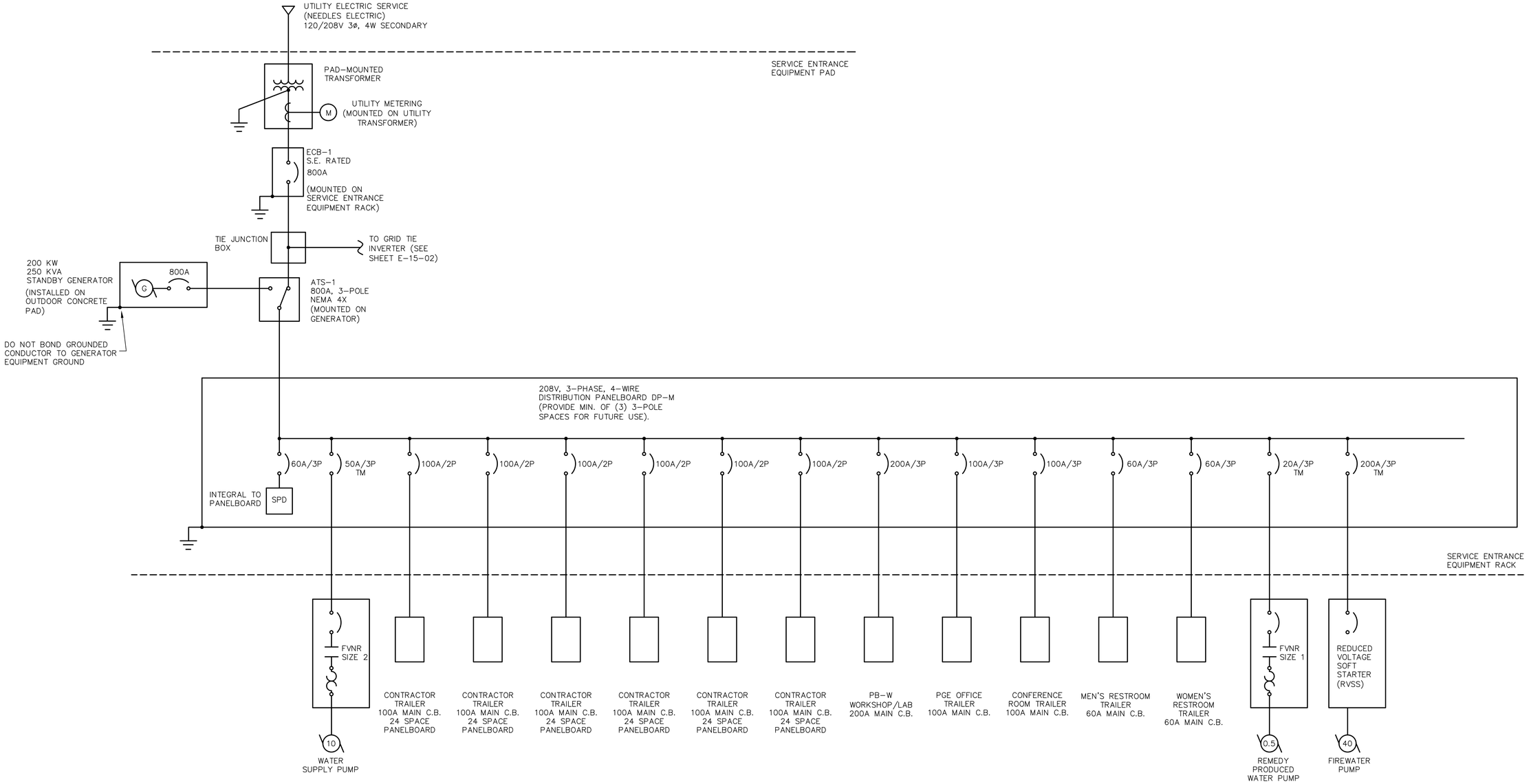

SINGLE LINE DIAGRAM

- FINAL DESIGN -
FOR AGENCY
APPROVAL ONLY

REGISTERED PROFESSIONAL ENGINEER
JOHN M. SIDOTI
20532
Exp. 9-30-17
ELECTRICAL
STATE OF CALIFORNIA

ARCADIS

NO.	DATE	DESCRIPTION	GM/SPEC	DWN	CHKD	SUPV	APVD BY
1	11/18/15	FINAL DESIGN	AJW	JPB	JMS	RAO	
0	2/2/15	SUPPLEMENTAL PRE-FINAL (90%) DESIGN	AJW	JMS	JPB	JEF	

REVISIONS

APPROVED BY	SO
RAO	SUPV
	DSGN
	DWN
	CHKD
	OK
	DATE
	SCALES

TOPOCK GROUNDWATER REMEDIATION PROJECT

CONSTRUCTION HEADQUARTERS
SINGLE LINE DIAGRAM

GAS TRANSMISSION & DISTRIBUTION
PACIFIC GAS AND ELECTRIC COMPANY
SAN FRANCISCO, CALIFORNIA

MICROFILM	
BILL OF MATL	
DWG LIST	
SUPSDS	
SUPSD BY	
SHEET NO. of SHEETS	
E-15-01	REV 1

N180B

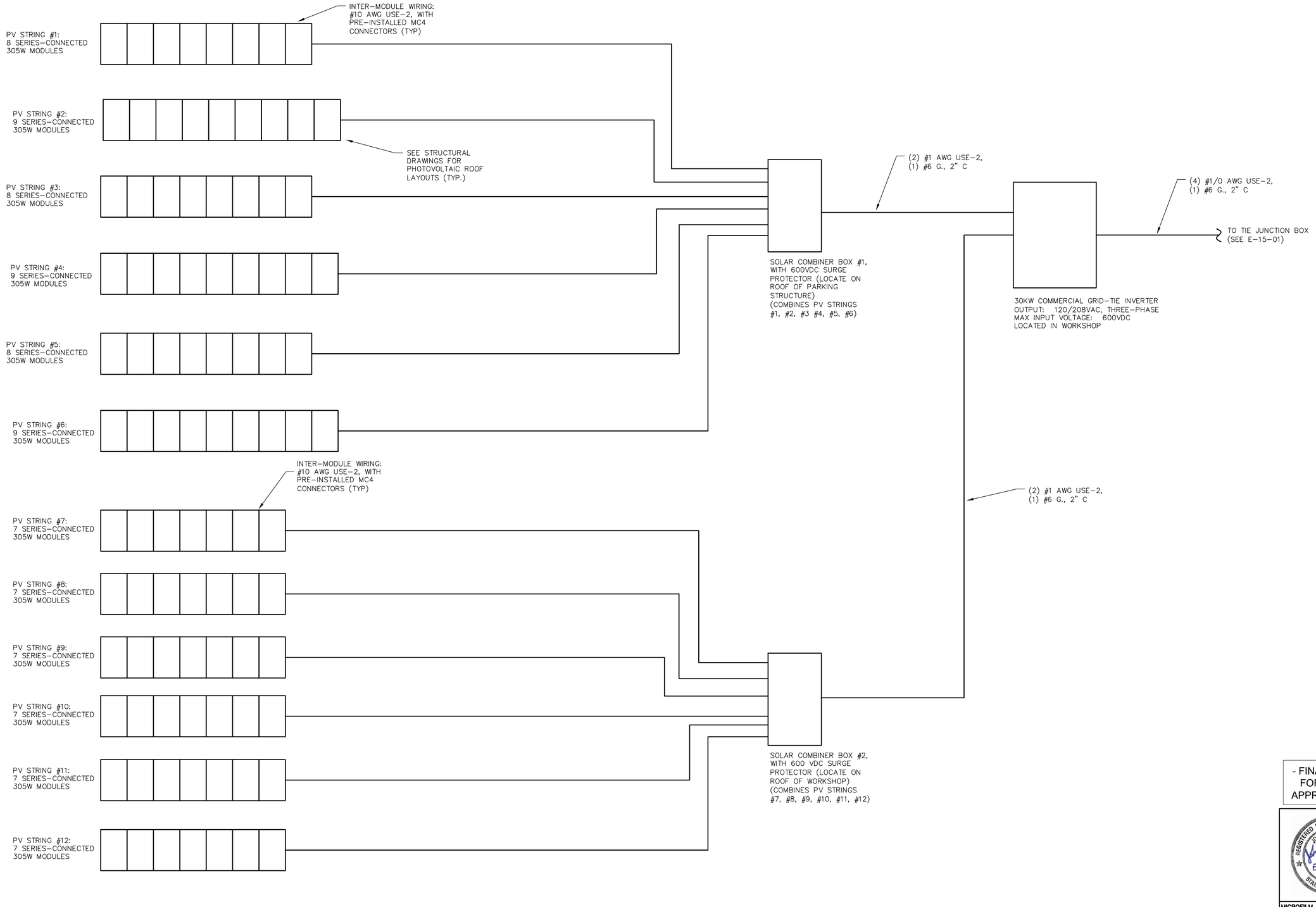

- FINAL DESIGN - FOR AGENCY APPROVAL ONLY

REGISTERED PROFESSIONAL ENGINEER JOHN M. SIDOTI 20532 Exp. 9-30-17 ELECTRICAL STATE OF CALIFORNIA

ARCADIS

NO.	DATE	DESCRIPTION	GM/SPEC	DWN	CHKD	SUPV	APVD BY
1	11/18/15	FINAL DESIGN		AJW	JPB	JMS	RAO
0	2/2/15	SUPPLEMENTAL PRE-FINAL (90%) DESIGN		AJW	JMS	JPB	JEF

REVISIONS

APPROVED BY	
RAO	SO
	SUPV
	DSGN
	DWN
	CHKD
	OK
	DATE
	SCALES

TOPOCK GROUNDWATER REMEDIATION PROJECT

CONSTRUCTION HEADQUARTERS SOLAR SINGLE LINE DIAGRAM

GAS TRANSMISSION & DISTRIBUTION
PACIFIC GAS AND ELECTRIC COMPANY
SAN FRANCISCO, CALIFORNIA

MICROFILM	
BILL OF MATL	
DWG LIST	
SUPSDS	
SUPSD BY	
SHEET NO. of SHEETS	
E-15-02	REV 1

N1808

CONSTRUCTION HEADQUARTERS YARD CONDUIT AND CABLE SCHEDULE					
CONDUIT	CONDUIT SIZE	ORIGIN	DESTINATION/ WELL (#)	CONDUCTOR	NOTES
P1	4"	PRIMARY POLE	UTILITY PAD	EMPTY 4" CONDUIT WITH PULL LINE	
P2	4"	UTILITY PAD	ECB-1/MAIN PANEL DP-M	(2) SETS OF (4) 600 KCM	
P3	2"	DP-M	TRAILER #1	(4) #1/0, (1) #6 GND (CONTRACTOR TRAILER #1)	
P4	2"	DP-M	TRAILER #2	(4) #1/0, (1) #6 GND (CONTRACTOR TRAILER #2)	
P5	2"	DP-M	TRAILER #3	(4) #1/0, (1) #6 GND (CONTRACTOR TRAILER #3)	
P6	2"	DP-M	TRAILER #4	(4) #1/0, (1) #6 GND (CONTRACTOR TRAILER #4)	
P7	2"	DP-M	TRAILER #5	(4) #1/0, (1) #6 GND (CONTRACTOR TRAILER #5)	
P8	2"	DP-M	TRAILER #6	(4) #1/0, (1) #6 GND (CONTRACTOR TRAILER #6)	
P9	2"	DP-M	WORKSHOP/LAB	(4) #3/0, (1) #6 GND	
P10	2"	DP-M	CONFERENCE ROOM	(4) #1/0, (1) #6 GND	
P11	1-1/2"	DP-M	WOMEN'S RESTROOM	(4) #1, (1) #8 GND (WOMEN'S RESTROOM)	
P12	1-1/2"	DP-M	MEN'S RESTROOM	(4) #1, (1) #8 GND (MEN'S RESTROOM)	
P13	1"	DP-M	DECONTAMINATION PAD	(2) #8, (1) #8 GND (DECON PAD)	(2) SETS
P14	2"	DP-M	OFFICE TRAILER	(4) #1 / 0, (1) #6 GND	
P15	2"	DP-M	WATER SUPPLY PUMP	(3) #4, (1) #6 GND	
P16	2"	DP-M	FIRE WATER PUMP	(3) #3/0, (1) #6 GND	
P17	4"	ECB-1	ATS/GENERATOR	(2) SETS OF (4) 600 KCM, (1) #1/0 GND	
P18	2"	GRID-TIE INVERTER	TIE JUNCTION BOX	(4) #1/0 USE, (1) #6 GND	
P19	4"	ATS/GENERATOR	DP-M	(2) SETS OF (4) 600 KCM, (1) #1/0 GND	
P20	2"	SUN SHADE	GRID TIE INVERTER	(2) #1 USE, (1) #6 GND	
T1	2"	TELECOMM PANEL	WORKSHOP, OFFICE/CONF.	EMPTY 2" CONDUIT WITH PULL LINE	
S1	2"	WORKSHOP/LAB	GATE OPERATOR	EMPTY 2" CONDUIT WITH PULL LINE	
I1	2"	WATER TANK	SEWAGE TANK	EMPTY 2" CONDUIT WITH PULL LINE	

P=Power, F=Fiber Optic (F.O.), C=Controls, T=Telecomm, S=Security, I=Instrumentation
ALL POWER CONDUCTORS ARE AWG XHHW UNLESS OTHERWISE NOTED

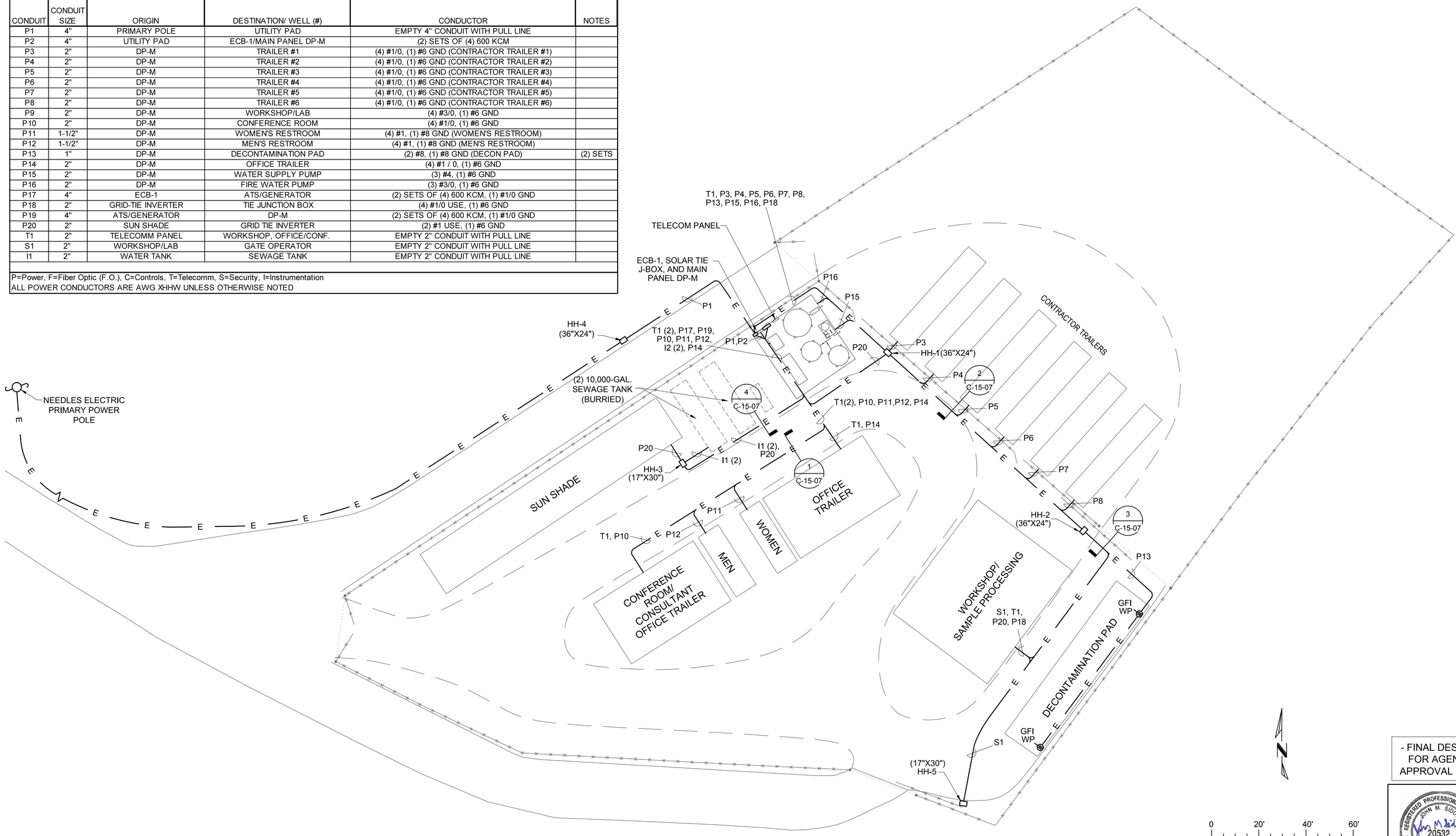

- FINAL DESIGN - FOR AGENCY APPROVAL ONLY

REGISTERED PROFESSIONAL ENGINEER JOHN M. SIDOTI 20532 Exp. 9-30-17 ELECTRICAL STATE OF CALIFORNIA

ETIC ENGINEERING

ARCADIS

NO.	DATE	DESCRIPTION	GM/SPEC	DWN	CHKD	SUPV	APVD BY
1	11/18/15	FINAL DESIGN		AJW	JPB	JMS	RAO
0	2/2/15	SUPPLEMENTAL PRE-FINAL (90%) DESIGN		AJW	JMS	JPB	JEF

REVISIONS

APPROVED BY: RAO

SO
SUPV
DSGN
DWN
CHKD
OK
DATE
SCALES

TOPOCK GROUNDWATER REMEDIATION PROJECT

CONSTRUCTION HEADQUARTERS ELECTRICAL PLAN

GAS TRANSMISSION & DISTRIBUTION
PACIFIC GAS AND ELECTRIC COMPANY
SAN FRANCISCO, CALIFORNIA

MICROFILM
BILL OF MATL
DWG LIST
SUPSDS
SUPSD BY
SHEET NO. of SHEETS

E-15-03 REV 1

N1808

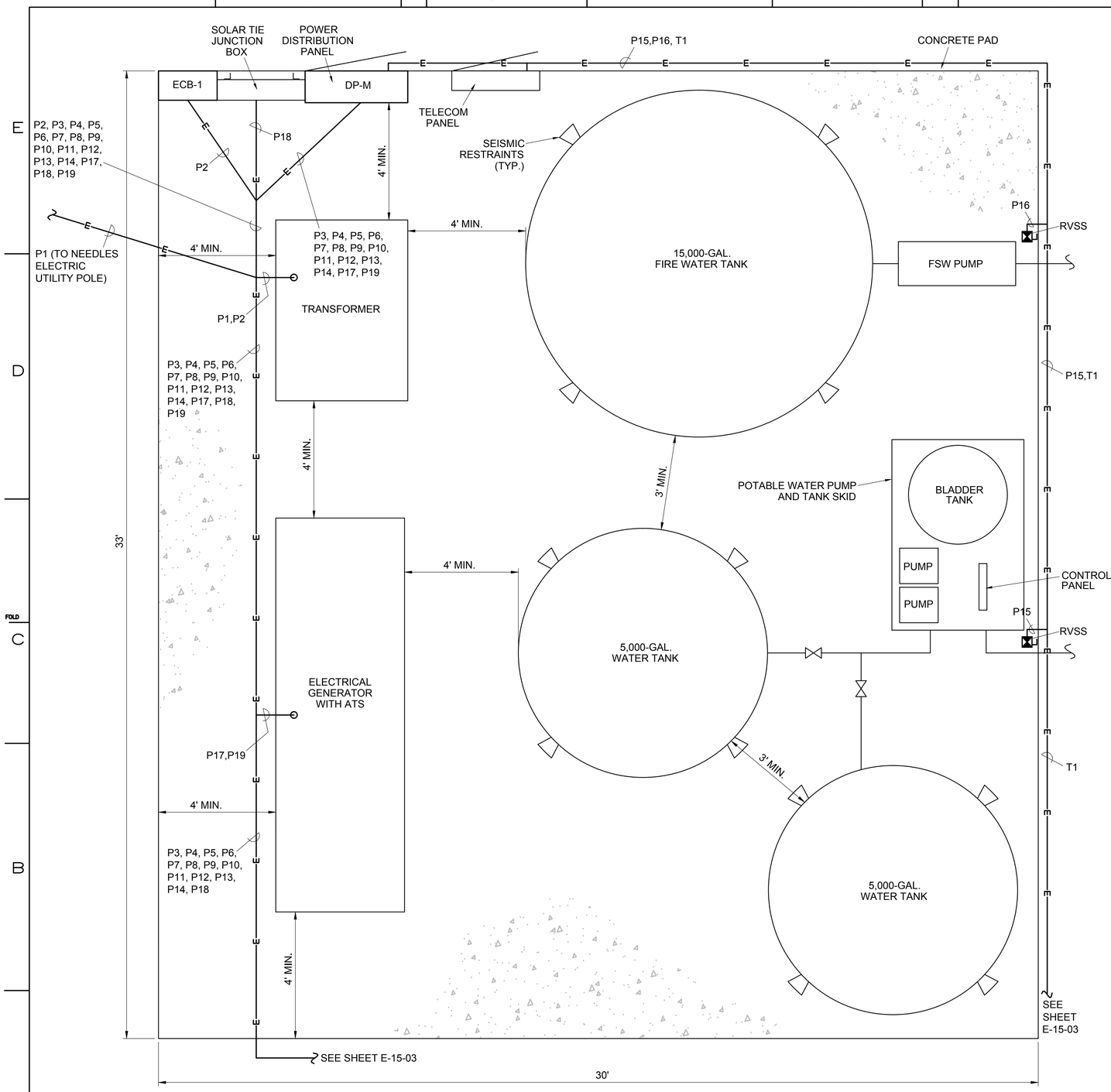

1 UTILITY PAD ELECTRICAL PLAN

1/2"=1'-0"

- FINAL DESIGN - FOR AGENCY APPROVAL ONLY

REGISTERED PROFESSIONAL ENGINEER JOHN M. SIDOTI 20532 Exp. 9-30-17 ELECTRICAL STATE OF CALIFORNIA

ETIC ENGINEERING

ARCADIS

NO.	DATE	DESCRIPTION	GM/SPEC	DWN	CHKD	SUPV	APVD BY
1	11/18/15	FINAL DESIGN		AJW	JPB	JMS	RAO
0	2/2/15	SUPPLEMENTAL PRE-FINAL (90%) DESIGN		AJW	JMS	JPB	JEF

REVISIONS

APPROVED BY	
RAO	SO
	SUPV
	DSGN
	DWN
	CHKD
	OK
	DATE
	SCALES

TOPOCK GROUNDWATER REMEDIATION PROJECT

UTILITY PAD ELECTRICAL PLAN

GAS TRANSMISSION & DISTRIBUTION

PACIFIC GAS AND ELECTRIC COMPANY

SAN FRANCISCO, CALIFORNIA

MICROFILM	
BILL OF MATL	
DWG LIST	
SUPSDS	
SUPSD BY	
SHEET NO. of SHEETS	
E-15-04	REV 1

N1808

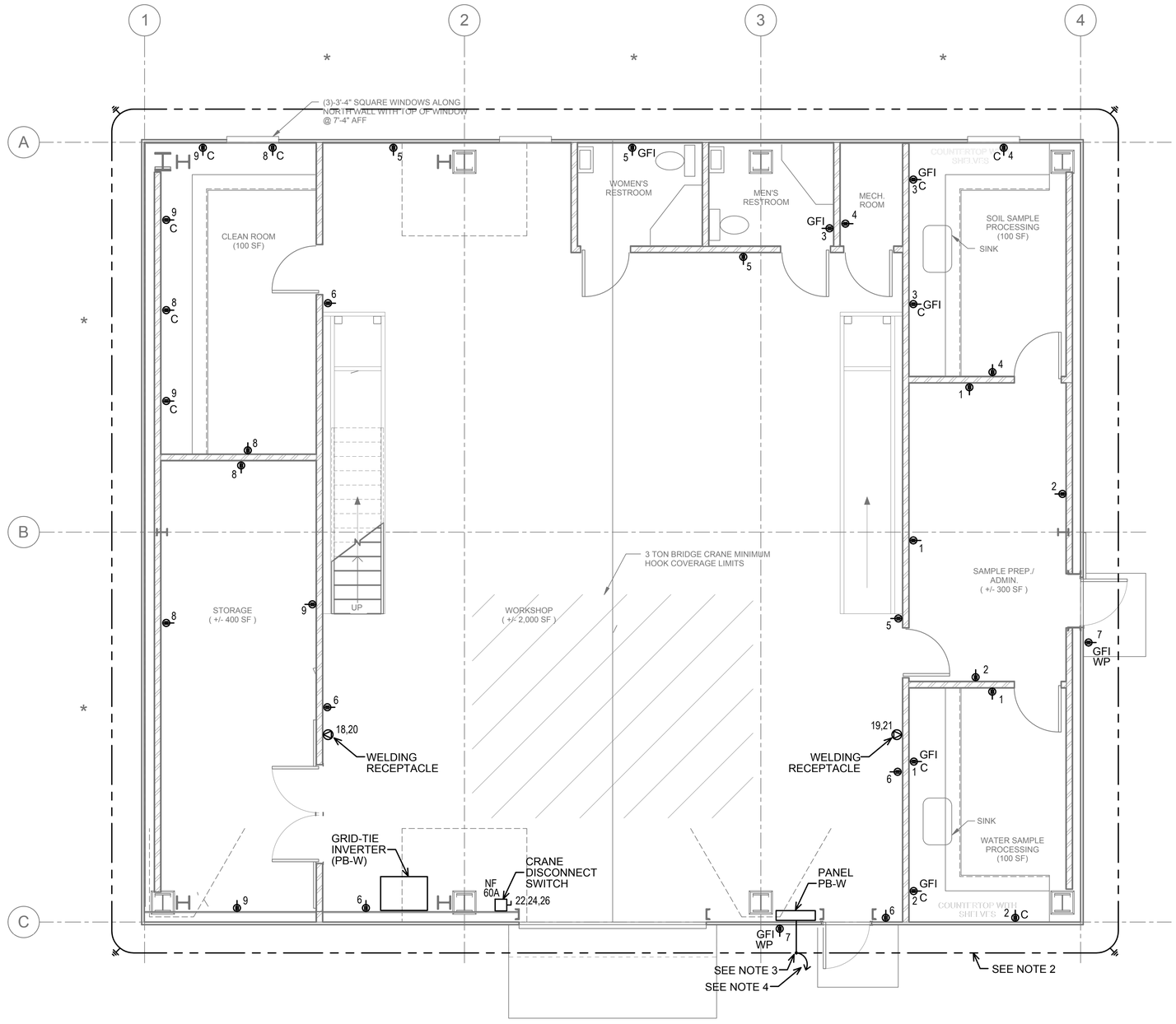

1 POWER PLAN
1/4"=1'-0"

0 4' 8' 12'
SCALE: 1/4"=1'-0"

NOTES:
1. REFER TO SINGLE LINE DIAGRAMS FOR CONDUIT AND WIRE SCHEDULE.
2. PROVIDE AND INSTALL #2 / 0 GROUNDING RING.
3. PROVIDE AND INSTALL #1 / 0 AWG GROUNDING ELECTRODE CONDUCTOR TO SERVICE ENTRANCE DISCONNECT IN PANEL PB-W. DO NOT PROVIDE N-G BOND.
4. PROVIDE AND INSTALL #2 GROUNDING ELECTRODE TO FOUNDATION REBAR.
5. USE #10 CONDUCTORS FOR 120V, 20a BRANCH CIRCUITS OVER 100 FEET.
6. 120V, 1Ø CIRCUITING WIRED TO PANEL PB-W, CIRCUIT NUMBER AS SHOWN ON PLANS, UNLESS OTHERWISE NOTED.

- FINAL DESIGN - FOR AGENCY APPROVAL ONLY

REGISTERED PROFESSIONAL ENGINEER JOHN M. SIDDITI 20532 Exp. 9-30-17 ELECTRICAL STATE OF CALIFORNIA

ETIC ENGINEERING

ARCADIS

NO.	DATE	DESCRIPTION	GM/SPEC	DWN	CHKD	SUPV	APVD BY
1	11/18/15	FINAL DESIGN		AJW	JPB	JMS	RAO
0	2/2/15	SUPPLEMENTAL PRE-FINAL (90%) DESIGN		AJW	JMS	JPB	JEF

REVISIONS

APPROVED BY	
RAO	SO
	SUPV
	DSGN
	DWN
	CHKD
	OK
	DATE
	SCALES

TOPOCK GROUNDWATER REMEDIATION PROJECT

WORKSHOP BUILDING ELECTRICAL PLAN

GAS TRANSMISSION & DISTRIBUTION
PACIFIC GAS AND ELECTRIC COMPANY
SAN FRANCISCO, CALIFORNIA

MICROFILM	
BILL OF MATL	
DWG LIST	
SUPSDS	
SUPSD BY	
SHEET NO.	of SHEETS
E-15-05	REV 1

N180B

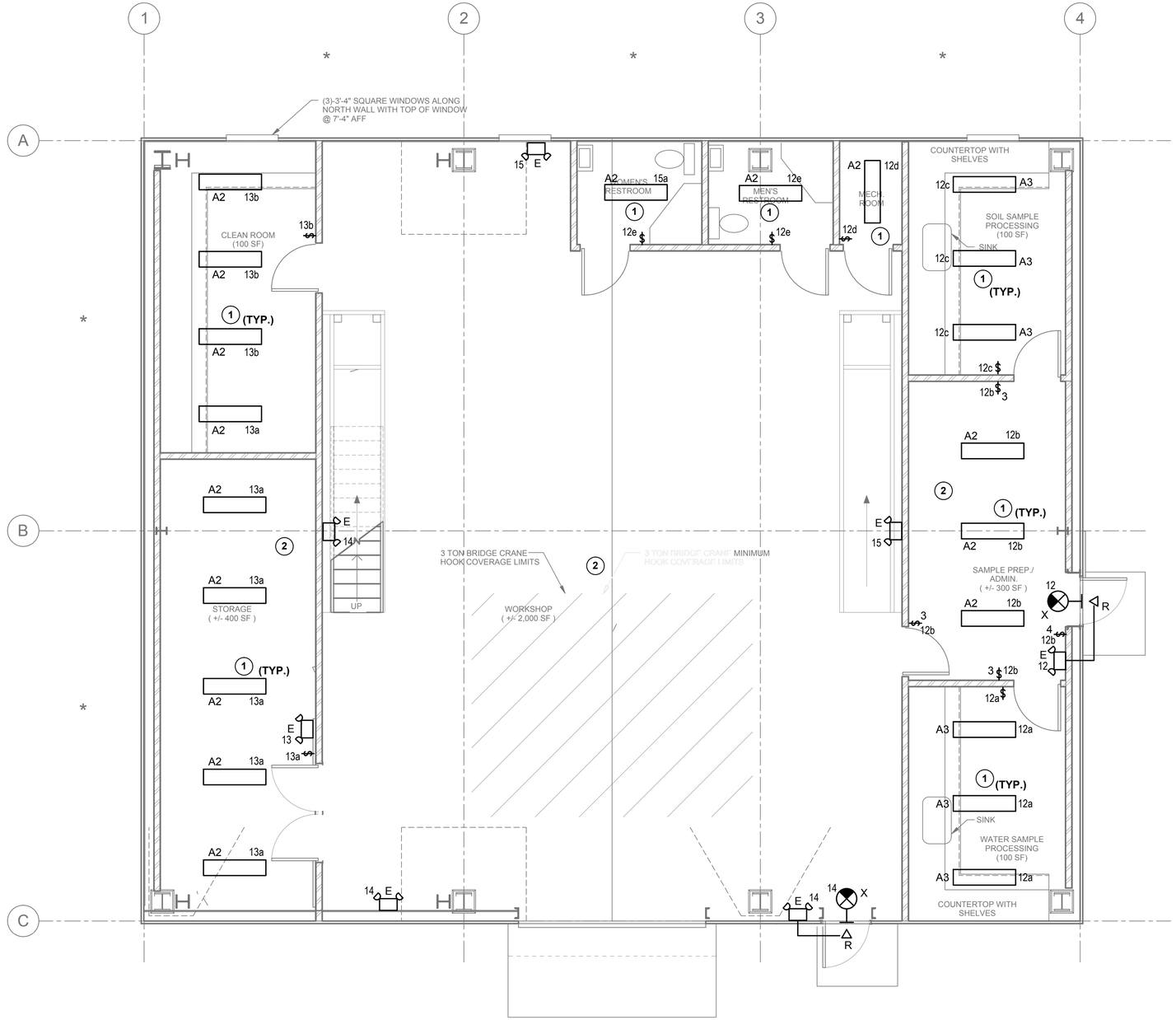

1 LIGHTING PLAN
1/4"=1'-0"

0 4' 8' 12'
SCALE: 1/4"=1'-0"

LEGEND:

$2a — NUMBER INDICATES CIRCUIT, LOWER CASE LETTER INDICATES SWITCH LEG

GENERAL NOTES:

1. MONORAIL LOCATION SHOULD BE AVOIDED FOR LIGHTING LAYOUT IN WORKSHOP.
2. 120V, 1Ø CIRCUITING TO BE (2) #12, (1) #12 G., 3/4" C., UNLESS OTHERWISE NOTED.
3. USE #10 CONDUCTORS FOR 120V, 20A BRANCH CIRCUITS OVER 100 FEET.
4. 120V, 1Ø LIGHTING CIRCUITING WIRED TO PANEL PB-W, CIRCUIT NUMBER AS SHOWN ON PLANS, UNLESS OTHERWISE NOTED.
5. CIRCUIT EXIT AND EMERGENCY LIGHTING AHEAD OF LOCAL SWITCHING.

PLAN NOTES:

(1) MOUNT LUMINAIRE DIRECTLY TO CEILING SURFACE.

(2) SEE SHEET E-15-07 FOR WORKSHOP AREA AND STORAGE AREA LIGHTING AND SWITCHING.

- FINAL DESIGN - FOR AGENCY APPROVAL ONLY

REGISTERED PROFESSIONAL ENGINEER — JOHN M. SIDOTI — 20532 — Exp. 9-30-17 — ELECTRICAL — STATE OF CALIFORNIA

ETIC ENGINEERING

ARCADIS

NO.	DATE	DESCRIPTION	GM/SPEC	DWN	CHKD	SUPV	APVD BY
1	11/18/15	FINAL DESIGN		AJW	JPB	JMS	RAO
0	2/2/15	SUPPLEMENTAL PRE-FINAL (90%) DESIGN		AJW	JMS	JPB	JEF

REVISIONS

APPROVED BY	
RAO	SO
	SUPV
	DSGN
	DWN
	CHKD
	OK
	DATE
	SCALES

TOPOCK GROUNDWATER REMEDIATION PROJECT

WORKSHOP BUILDING LIGHTING PLAN (1 OF 2)

GAS TRANSMISSION & DISTRIBUTION
PACIFIC GAS AND ELECTRIC COMPANY
SAN FRANCISCO, CALIFORNIA

MICROFILM	
BILL OF MATL	
DWG LIST	
SUPSDS	
SUPSD BY	
SHEET NO.	of SHEETS
E-15-06	REV 1

N1808

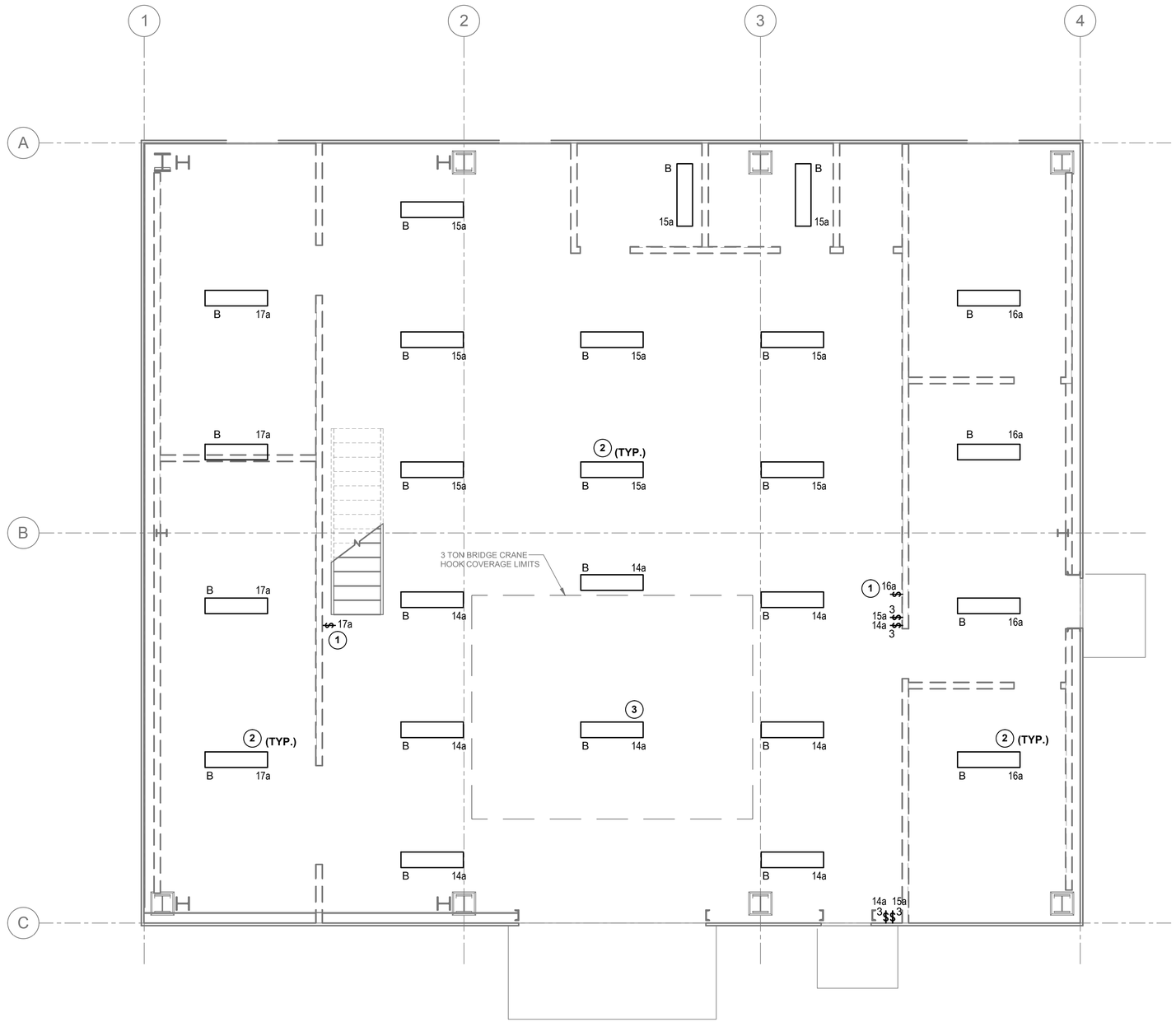

N

LEGEND:

$2a — NUMBER INDICATES CIRCUIT, LOWER CASE LETTER INDICATES SWITCH LEG

GENERAL NOTES:

1. MONORAIL LOCATION SHOULD BE AVOIDED FOR LIGHTING LAYOUT IN WORKSHOP.
2. 120V, 1Ø CIRCUITING TO BE (2) #12, (1) #12 G., 3/4" C., UNLESS OTHERWISE NOTED.
3. USE #10 CONDUCTORS FOR 120V, 20A BRANCH CIRCUITS OVER 100 FEET.
4. 120V, 1Ø LIGHTING CIRCUITING WIRED TO PANEL PB-W, CIRCUIT NUMBER AS SHOWN ON PLANS, UNLESS OTHERWISE NOTED.
5. CIRCUIT EXIT AND EMERGENCY LIGHTING AHEAD OF LOCAL SWITCHING.

PLAN NOTES:

(1) LIGHTING SWITCH FOR ABOVE ROOM STORAGE SPACE.

(2) PENDANT MOUNT, AT 18' ABOVE FINISHED FLOOR.

(3) PENDANT MOUNT, AT 19' ABOVE FINISHED FLOOR (ABOVE TRAVELING BRIDGE CRANE PATH).

1 LIGHTING PLAN
1/4"=1'-0"

0 4' 8' 12'
SCALE: 1/4"=1'-0"

- FINAL DESIGN - FOR AGENCY APPROVAL ONLY

REGISTERED PROFESSIONAL ENGINEER JOHN M. SIDDOWAY 20532 Exp. 9-30-17 ELECTRICAL STATE OF CALIFORNIA

ETIC ENGINEERING

ARCADIS

NO.	DATE	DESCRIPTION	GM/SPEC	DWN	CHKD	SUPV	APVD BY
1	11/18/15	FINAL DESIGN		AJW	JPB	JMS	RAO
0	2/2/15	SUPPLEMENTAL PRE-FINAL (90%) DESIGN		AJW	JMS	JPB	JEF

REVISIONS

APPROVED BY: RAO

SO | SUPV | DSGN | DWN | CHKD | OK | DATE | SCALES

TOPOCK GROUNDWATER REMEDIATION PROJECT

WORKSHOP BUILDING LIGHTING PLAN (2 OF 2)

GAS TRANSMISSION & DISTRIBUTION
PACIFIC GAS AND ELECTRIC COMPANY
SAN FRANCISCO, CALIFORNIA

MICROFILM | BILL OF MATL | DWG LIST | SUPSDS | SUPSD BY

SHEET NO. E-15-07 of SHEETS | REV 1

N1808

LUMINAIRE SCHEDULE

		LAMPS		CONNECTED WATTS			
		QUANTITY	TYPE				
A2		2	F32T8	64	ENCLOSED AND GASKETED FLUORESCENT LUMINAIRE, WITH IMPACT RESISTANT FIBERGLASS REINFORCED POLYESTER HOUSING, AND HIGH IMPACT ACRYLIC DIFFUSER.	LITHONIA CAT NO. DMW232-120-GEB10IS, DAY-BRITE, OR EQUAL.	MOUNT DIRECTLY TO CEILING SURFACE
A3		3	F3278	96	SAME AS TYPE A2, EXCEPT 3-LAMP	LITHONIA CAT NO. DMW332-120-GEB10IS, DAY-BRITE, OR EQUAL.	MOUNT DIRECTLY TO CEILING SURFACE
B		2	F54T5	108	FLUORESCENT HIGH OUTPUT HIGH-BAY LUMINAIRE, WITH FULL FIXTURE BODY, CLEAR ACRYLIC SHIELDING, AND CHAIN HANGER MOUNT ACCESSORIES	LITHONIA CAT NO. FSB-254L-ACL-MVOLT-LP835-HSD36	MOUNT AT 18' ABOVE FINISHED FLOOR
E		2	25W SBT	20	SELF-CONTAINED EMERGENCY LIGHTING UNIT WITH 120V CHARGER, 12V LEAD-CALCIUM BATTERY, AND CAPABILITY FOR THE ADDITION OF REMOTE HEADS	DUAL-LITE CAT NO. LM112-12V-D-I, EMERGI-LITE, OR EQUAL CAPACITY FOR SRHSW1225 REMOTE HEAD	MOUNT AT 8' ABOVE FINISHED FLOOR, UON
H		1	50W MH	50M	METAL HALIDE WALL PACK, WITH CUTOFF DISTRIBUTION, CORROSION-RESISTANT, DIE-CAST ALUMINUM HOUSING, AND PHOCTOCELL, UL LISTED FOR WET LOCATIONS	LUMINAIRE: LITHONIA CAT NO. TWAC-50M-120-PE-LPI, OR EQUAL	MOUNT AT 8' ABOVE GRADE TO CENTERLINE OF LUMINAIRE, UON
R		1	25W SBT	20	REMOTE INCANDESCENT OUTDOOR HEAD FOR EMERGENCY LIGHTING UNIT E1 ABOVE.	DUAL-LITE CAT NO. SRHSW1225, EMERGI-LITE, OR EQUAL	EXTERIOR MOUNT AT 8' ABOVE GRADE TO CENTERLINE OF LUMINAIRE, UON
X		6	RED LED	4	RED LED EXIT SIGN, WITH THERMOPLASTIC HOUSING, NICKEL-CADMIUM BATTERY, WITH SELF-TESTING ELECTRONICS	DUAL LITE LXURWE-I, EMERGI-LITE OR EQUAL	WALL OR PENDANT MOUNT FROM CEILING

PANEL:	**PB-W**	**LOCATION:**	**CHQ Workshop**									**CABINET MOUNTING:**	**SURFACE**		
VOLTS:	**208Y/120V**	**PHASE:**	**3**	**WIRE:**	**4**		**ENCLOSURE: NEMA TYPE**	**1**				**RATING:**	**10 KAIC**		
FEED:	**BOTTOM, 200A MAIN C/B**		**NEUTRAL:**	**100%**	**NOTE:**										

LOAD SERVED	LOAD (KVA) A	LOAD (KVA) B	LOAD (KVA) C	BREAKER AMP	BREAKER POLE	CKT	PH	CKT	BREAKER AMP	BREAKER POLE	LOAD (KVA) A	LOAD (KVA) B	LOAD (KVA) C	LOAD SERVED
RECEPTACLES--SAMPLE/ADMIN, WATER SAMPLE	0.8			20	1	1	A	2	20	1	0.8			RECEPTACLES--SAMPLE/ADMIN, WATER SAMPLE PROCESSING
RECEPTACLES--SOIL SAMPLE PROCESSING, MECH		0.6		20	1	3	B	4	20	1		0.6		RECEPTACLES--SOIL SAMPLE PROCESSING, MECH ROOM, RR
RECEPTACLES--WORKSHOP			0.8	20	1	5	C	6	20	1			1.0	RECEPTACLES--WORKSHOP
RECEPTACLES--OUTDOOR	0.4			20	1	7	A	8	20	1	1.0			RECEPTACLES--STORAGE, CLEAN ROOM
RECEPTACLES--STORAGE, CLEAN ROOM		0.8		20	1	9	B	10	20	1				SPARE
SPARE				20	1	11	C	12	20	1			0.9	LIGHTING--WATER, SOIL SAMPLE PROCESSING, SAMPLE,
LIGHTING--STORAGE, CLEAN ROM	0.5			20	1	13	A	14	20	1	1.0			LIGHTING--WORKSHOP
LIGHTING--WORKSHOP		1.0		20	1	15	B	16	20	1		0.7		LIGHTING--STORAGE AREA
LIGHTING--STORAGE AREA			0.5	20	1	17	C	18	50	2			2.1	WELDER RECEPTACLE
WELDER RECEPTACLE	2.1			50	2	19	A	20			2.1			" "
" "		2.1				21	B	22				3.0		CRANE
FC-1/CU-1			1.4	20	2	23	C	24	35	3			3.0	" "
" "	1.4					25	A	26			3.0			" "
FC-2/CU-2		1.4		20	2	27	B	28	20	2		1.4		FC-1/CU-1
" "			1.4			29	C	30					1.4	" "
SPARE				20	1	31	A	32	20	2	1.4			FC-1/CU-1
FC-1/CU-1		1.4		20	2	33	B	34				1.4		" "
" "			1.4			35	C	36	20	1				SPARE
SPARE				20	1	37	A	38	20	1				SPARE
SPARE				20	1	39	B	40	20	1				SPARE
SPARE				20	1	41	C	42	20	1				SPARE
SUB-TOTAL CONNECTED KVA:	5.2										9.3			14.5
		7.3										7.1		14.4
			5.5										8.4	13.9
TOTAL CONNECTED KVA:														42.8

Topock CHQ Utility Estimate
Load Calculations

Equipment	Connected Load Quantity	Connected Load KVA	Service Factor	Running KVA
Double Wide Contractor Trailer	6	12	1	72
(20'x50' office trailer, 1000 SF)				
Lighting: 3 KW				
Recept: 3 KW (includes printer)				
HVAC: 12 KW				
Workshop (2500 SF)	1	43	1	43
Manufactured building, w/ 500 SF office space, clean room, bathroom and shower				
Lighting: as shown in PB-W				
Recept/Misc. Power: as shown in PB-W				
HVAC: as shown in PB-W				
Conference Room/Consultant Conference Trailer	1	20	1	20
(Three 10'x50' connected office trailers, 1500 SF)				
Lighting: 3 KW				
Recept: 5 KW				
HVAC: 12 KW				
PGE Office Trailer (1500 SF)	1	20	1	20
(Three 10'x50' connected office trailers, with 6 offices and two bathrooms, 1500 SF)				
Lighting: 3 KW				
Recept: 5 KW				
HVAC: 12 KW				
Lab	1	22	1	22
(Two 10'x50' connected office trailers, 1000 SF)				
Lighting: 2 KW				
Recept: 10 KW				
HVAC: 10 KW				
Bathroom Trailer (10'x20') (200 SF) (2 total)	2	3.5	1	7
(Two 10'x 20' trailers)				
Lighting: 1 KW				
Recept: 1 KW				
HVAC: 1.5 KW				
Water Tank Area				
Water Supply Pump, 10 HP	1	12	1	12
Firewater Pump, 10 HP	1	12	1	12
Remedy Produced Water Pump, 0.5 HP	1	1	1	1
Yard Area/Security Lighting	1	2	1	2
Soil Processing Area/Security Lighting	1	2	1	2
ATV Charging station	1	3	1	3
Total KVA				216
Total (125% of largest motor)				219
Total FLA (208V, 3-phase)				600

CHQ Anticipated Electrical Service:	120/208V, 3-phase, 4-wire, 800A
Anticipated Transformer Size for CHQ Service:	225 KVA
Anticipated Generator Size:	250 KVA
Estimate of Peak Load:	200 KVA
Estimate of Average Load:	125 KVA
Peak Load Characteristics (duration, frequency):	May through September, continuously 24 hours/day

REGISTERED PROFESSIONAL ENGINEER JOHN M. SIDDOWAY 20532 Exp: 9-30-17 ELECTRICAL STATE OF CALIFORNIA

- FINAL DESIGN -
FOR AGENCY APPROVAL ONLY

ETIC ENGINEERING

ARCADIS

NO.	DATE	DESCRIPTION	GM/SPEC	DWN	CHKD	SUPV	APVD BY
1	11/18/15	FINAL DESIGN		AJW	JPB	JMS	RAO
0	2/2/15	SUPPLEMENTAL PRE-FINAL (90%) DESIGN		AJW	JMS	JPB	JEF

REVISIONS

APPROVED BY: RAO

SO | SUPV | DSGN | DWN | CHKD | OK | DATE | SCALES

TOPOCK GROUNDWATER REMEDIATION PROJECT

WORKSHOP BUILDING ELECTRICAL SCHEDULES

GAS TRANSMISSION & DISTRIBUTION
PACIFIC GAS AND ELECTRIC COMPANY
SAN FRANCISCO, CALIFORNIA

MICROFILM | BILL OF MATL | DWG LIST | SUPSDS | SUPSD BY

SHEET NO. E-15-08 of SHEETS | REV 1

N1808

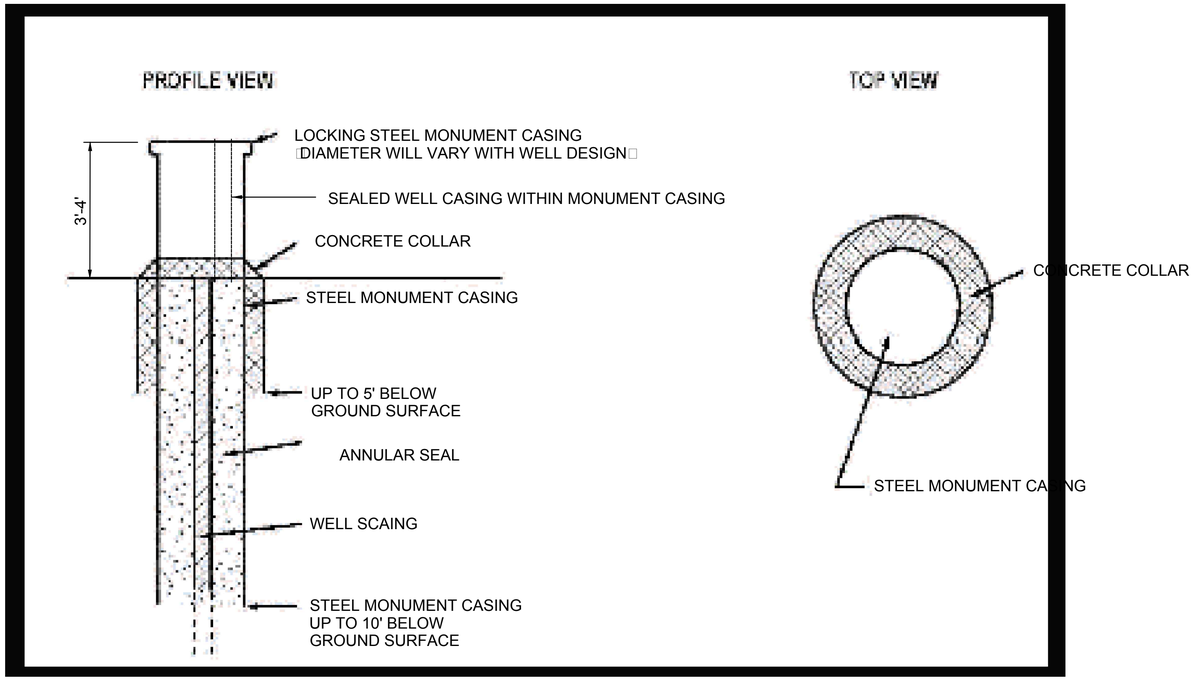

A ABOVE GROUND COMPLETION
NTS FOR USE IN ACTIVE WASH CHENNELS

EMCO WHEATON RETAIL

A0717 Square Manholes And Vaults

Locking Vault Manholes

- Double hinged lid opens and folds back to 180 degrees
- Lock-access lid permanently fastened with anti-theft chain, stainless steel bolt also permanently attached

All Emco Wheaton Square Manholes

- Fully painted inside and out
- 3/8" heavy duty diamond plate lid
- 16 gauge steel skirt
- Meet AASHTO H20 wheel loading

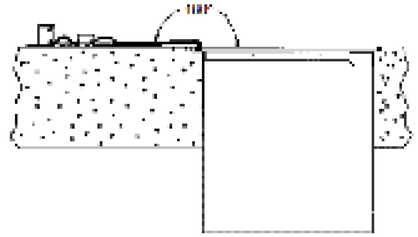

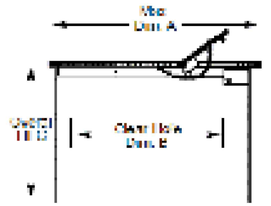

	Part Number	Style	A	B	C	Weight
18"	A0717-718	Lay-In	20.3"	1.00"	9.6"	56.8 lbs.
	A0717-718BW	Bolt Down Water-tight	20.3"	1.00"	9.6"	56.8 lbs.
	A0717-718AW	Bolt Down Water-tight	20.3"	1.00"	15.6"	70.4 lbs.
	A0717-718VW	Locking Vault Water-tight	20.3"	18.1"	15.6"	78.2 lbs.
24"	A0717-724	Lay-In	25.0"	22.5"	9.6"	56.8 lbs.
	A0717-724A	Lay-In	25.0"	22.5"	24.6"	116.5 lbs.
	A0717-724BW	Bolt Down Water-tight	25.0"	1.05"	9.6"	56.2 lbs.
	A0717-724AW	Bolt Down Water-tight	25.0"	1.05"	24.6"	116.7 lbs.
	A0717-721V	Locking Vault	24.3"	21.1"	24.6"	110.6 lbs.
	A0717-724VW	Locking Vault Water-tight	24.3"	21.1"	24.6"	110.5 lbs.
	A0717-724VWL	Locking Vault Water-tight	24.3"	21.1"	24.6"	119.5 lbs.

V = Hinged, B = Bolt-down, W = Water-tight, L = Lift Assist Lid

Emco Wheaton Retail - 2300 Industrial Parc Drive - Wilson, North Carolina 27893 - 252 243-0150

B BELOW GROUND COMPLETION
NTS FOR USE OUTSIDE ACTIVE WASH CHENNELS

- FINAL DESIGN -
FOR AGENCY
APPROVAL ONLY

NOTES:

1. WELL DESIGN AND CASING DIAMETERS WILL VARY BY LOCATION. MONUMENT CASING OR VAULT SIZE WILL VARY ACCORDINGLY.
2. WELLS WILL BE SEALED AND PROTECTED IN ACCORDANCE WITH CALIFORNIA OR ARIZONA WELL STANDARDS, AS APPROPRIATE.
3. WELL HEAD CONSTRUCTION DETAILS ARE NOT TO SCALE (NTS)

REGISTERED PROFESSIONAL ENGINEER BENJAMIN J. WUERL C 67811 EXP. 6/30/17 STATE OF CALIFORNIA

ETIC ENGINEERING

ARCADIS

NO.	DATE	DESCRIPTION	GM/SPEC	DWN	CHKD	SUPV	APVD BY
1	11/18/15	FINAL DESIGN		AJW	WLM	BW	RAO
0	9/8/14	PRE-FINAL 90% DESIGN	GM/SPEC	SL	MB	MC	CH

REVISIONS

APPROVED BY: RAO

SO / SUPV / DSGN / DWN / CHKD / OK / DATE / SCALES

TOPOCK GROUNDWATER REMEDIATION PROJECT

MONITORING WELL HEAD DESIGNS

GAS TRANSMISSION & DISTRIBUTION
PACIFIC GAS AND ELECTRIC COMPANY
SAN FRANCISCO, CALIFORNIA

MICROFILM
BILL OF MATL
DWG LIST
SUPSDS
SUPSD BY
SHEET NO. of SHEETS
C-16-01
REV 1

N1808

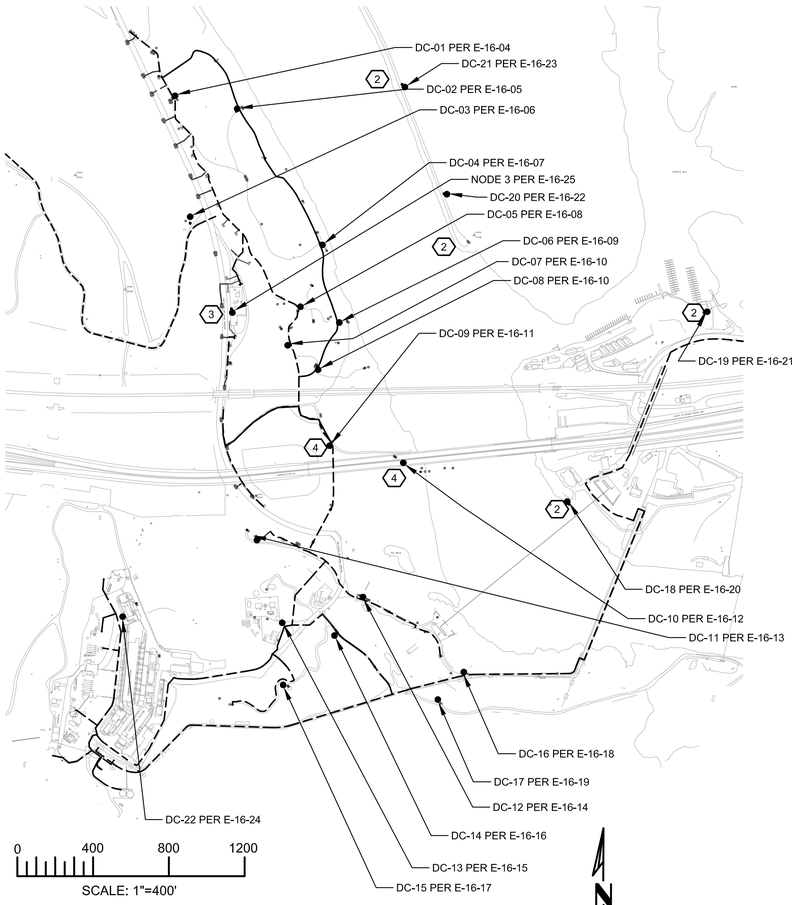

DATA COLLECTION STATION LOCATION SITE PLAN (1)

DATA COLLECTION STATION	MONITORING WELL	XMTR	PROBE SENSOR	CONDUIT NUMBER	POWER (CONDUIT)	COMM. (CONDUIT)
DC-01	MW-B	T1	LEVEL	D-DC01A	IRZ-5 (L-DC01)	IRZ-5 (D-DC01)
	IRZ-9		LEVEL	D-DC01B		
	TW-4		LEVEL	D-DC01C		
	IRZ-5		LEVEL	D-DC01D		
	MW-A		LEVEL	D-DC01E		
	MW-35-135		LEVEL	D-DC01F		
	MW-35-060		LEVEL			
	IRZ-1		LEVEL	D-DC01G		

DATA COLLECTION STATION	MONITORING WELL	XMTR	PROBE SENSOR	CONDUIT NUMBER	POWER (CONDUIT)	COMM. (CONDUIT)
DC-02	RB-1	T1	LEVEL	D-DC02A	RB-1 (L-DC02)	RB-1 (D-DC02)
	MW-49-135		LEVEL	D-DC02B		
	MW-49-275		LEVEL			
	MW-49-365		LEVEL			
	MW-29		LEVEL	D-DC02C		
	RB-2		LEVEL	D-DC02D		
	MW-33-150	T2	LEVEL	D-DC02E		
	MW-33-210		LEVEL			
	MW-33-090		LEVEL			
	MW-33-040		LEVEL			

DATA COLLECTION STATION	MONITORING WELL	XMTR	PROBE SENSOR	CONDUIT NUMBER	POWER (CONDUIT)	COMM. (CONDUIT)
DC-03	TW-5	T1	LEVEL	D-DC03A	IRZ-16 (L-DC03)	IRZ-16 (D-DC03)

DATA COLLECTION STATION	MONITORING WELL	XMTR	PROBE SENSOR	CONDUIT NUMBER	POWER (CONDUIT)	COMM. (CONDUIT)
DC-04	MW-28-090	T1	LEVEL	D-DC04A	RB-4 (L-DC04)	RB-4 (D-DC04)
	MW-28-025		LEVEL			
	RB-3		LEVEL	D-DC04B		
	MW-O		LEVEL	D-DC04C		
	RB-4		LEVEL	D-DC04D		
	MW-46-175		LEVEL	D-DC04E		
	MW-46-205		LEVEL			
	MW-H		LEVEL	D-DC04F		

DATA COLLECTION STATION	MONITORING WELL	XMTR	PROBE SENSOR	CONDUIT NUMBER	POWER (CONDUIT)	COMM. (CONDUIT)
DC-05	MW-44-115	T1	LEVEL	D-DC05A	IRZ-17 (L-DC05)	DC-07 (D-DC05)
	MW-44-070		LEVEL			
	MW-44-125		LEVEL			
	PT-5D		LEVEL	D-DC05B		
	PT-5M		LEVEL	D-DC05C		
	PT-5S		LEVEL	D-DC05D		
	MW-36-090	T2	LEVEL	D-DC05E		
	MW-36-070		LEVEL			
	MW-36-100		LEVEL			
	MW-36-050		LEVEL			
	MW-36-040		LEVEL			
	MW-36-020		LEVEL			
	MW-45-095A		LEVEL	D-DC05F		
	MW-45-095B		LEVEL			

DATA COLLECTION STATION	MONITORING WELL	XMTR	PROBE SENSOR	CONDUIT NUMBER	POWER (CONDUIT)	COMM. (CONDUIT)
DC-06	MW-34-100	T1	LEVEL	D-DC06A	RB-5 (L-DC06)	RB-5 (D-DC06)
	MW-34-080		LEVEL			
	MW-34-055		LEVEL			

DATA COLLECTION STATION	MONITORING WELL	XMTR	PROBE SENSOR	CONDUIT NUMBER	POWER (CONDUIT)	COMM. (CONDUIT)
DC-07	MW-30-050	T1	LEVEL	D-DC07A	RB-5 (L-DC07)	DC-08 (D-DC07)
	MW-30-030		LEVEL			
	MW-39-040		LEVEL	D-DC07B		
	MW-39-070		LEVEL			
	MW-39-080		LEVEL			
	MW-39-050		LEVEL			
	MW-39-100		LEVEL			
	MW-39-060		LEVEL			

DATA COLLECTION STATION	MONITORING WELL	XMTR	PROBE SENSOR	CONDUIT NUMBER	POWER (CONDUIT)	COMM. (CONDUIT)
DC-08	MW-42-065	T1	LEVEL	D-DC08A	RB-5 (L-DC08)	RB-5 (D-DC08)
	MW-42-055		LEVEL			
	MW-42-030		LEVEL			
	MW-27-060		LEVEL	D-DC08B		
	MW-27-085		LEVEL			
	MW-27-020		LEVEL			
	RB-5		LEVEL	D-DC08C		

DATA COLLECTION STATION	MONITORING WELL	XMTR	PROBE SENSOR	CONDUIT NUMBER	POWER (CONDUIT)	COMM. (CONDUIT)
DC-09	MW-22	T1	LEVEL	D-DC09A	IRZ-39 (L-DC09)	IRZ-39 (F-DC09) (4)
	MW-W		LEVEL	D-DC09B		
	MW-32-020		LEVEL	D-DC09C		
	MW-32-035		LEVEL			

DATA COLLECTION STATION	MONITORING WELL	XMTR	PROBE SENSOR	CONDUIT NUMBER	POWER (CONDUIT)	COMM. (CONDUIT)
DC-10	MW-43-025	T1	LEVEL	D-DC10A	IRZ-39 (L-DC10)	IRZ-39 (F-DC10)
	MW-43-075		LEVEL			
	MW-43-090		LEVEL			
	MW-52S	T2	LEVEL	D-DC10B		
	MW-53S		LEVEL	D-DC10C		
	MW-52M		LEVEL	D-DC10D		
	MW-52D		LEVEL	D-DC10E		
	MW-53M		LEVEL	D-DC10F		
	MW-53D		LEVEL	D-DC10G		

DATA COLLECTION STATION	MONITORING WELL	XMTR	PROBE SENSOR	CONDUIT NUMBER	POWER (CONDUIT)	COMM. (CONDUIT)
DC-11	MW-12	T1	LEVEL	D-DC11A	IRZ-39 (L-DC11)	IRZ-39 (D-DC11)

DATA COLLECTION STATION	MONITORING WELL	XMTR	PROBE SENSOR	CONDUIT NUMBER	POWER (CONDUIT)	COMM. (CONDUIT)
DC-12	MW-23-060	T1	LEVEL	D-DC12A	ER-1 (L-DC12)	ER-1 (D-DC12)
	MW-23-080		LEVEL			
	ER-1		LEVEL	D-DC12B		
	MW-62BR		LEVEL	D-DC12C		
	MW-62-190		LEVEL			
	MW-62-110		LEVEL			
	MW-62-065		LEVEL			
	ER-2		LEVEL	D-DC12D		

DATA COLLECTION STATION	MONITORING WELL	XMTR	PROBE SENSOR	CONDUIT NUMBER	POWER (CONDUIT)	COMM. (CONDUIT)
DC-13	MW-59-100	T1	LEVEL	D-DC13A	OP BUILDING (L-DC13)	OP BUILDING (D-DC13)
	MW-K		LEVEL	D-DC13B		
	TWB-2		LEVEL	D-DC13C		
	TWB-1		LEVEL	D-DC13D		

DATA COLLECTION STATION	MONITORING WELL	XMTR	PROBE SENSOR	CONDUIT NUMBER	POWER (CONDUIT)	COMM. (CONDUIT)
DC-14	MW-57-050	T1	LEVEL	D-DC14A	ER-1 (L-DC14)	ER-1 (D-DC14)
	MW-57-185		LEVEL			
	MW-57-070		LEVEL			
	MW-61-110		LEVEL	D-DC14B		

DATA COLLECTION STATION	MONITORING WELL	XMTR	PROBE SENSOR	CONDUIT NUMBER	POWER (CONDUIT)	COMM. (CONDUIT)
DC-15	MW-58-065	T1	LEVEL	D-DC15A	ER-6 (L-DC15)	ER-6 (D-DC15)
	MW-58-115		LEVEL			
	MW-58-205		LEVEL			
	ER-6		LEVEL	D-DC15B		
	MW-70BR-225		LEVEL	D-DC15C		
	MW-70-105		LEVEL			

DATA COLLECTION STATION	MONITORING WELL	XMTR	PROBE SENSOR	CONDUIT NUMBER	POWER (CONDUIT)	COMM. (CONDUIT)
DC-16	ER-5	T1	LEVEL	D-DC16A	ER-4 (L-DC16)	ER-4 (D-DC16)
	ER-4		LEVEL	D-DC16B		
	ER-3		LEVEL	D-DC16C		
	MW-T		LEVEL	D-DC16D		
	MW-63-065		LEVEL	D-DC16E		
	MW-72-080		LEVEL	D-DC16F		
	MW-73-080		LEVEL	D-DC16G		

DATA COLLECTION STATION	MONITORING WELL	XMTR	PROBE SENSOR	CONDUIT NUMBER	POWER (CONDUIT)	COMM. (CONDUIT)
DC-17	MW-64-150	T1	LEVEL	D-DC17A	ER-4 (L-DC17)	ER-4 (D-DC17)
	MW-64-205		LEVEL			
	MW-64-260		LEVEL			

DATA COLLECTION STATION	MONITORING WELL	XMTR	PROBE SENSOR	CONDUIT NUMBER	POWER (CONDUIT)	COMM. (CONDUIT)
DC-18 (2)	MW-56S	T1	LEVEL	D-DC18A	SOLAR	RADIO
	MW-56M		LEVEL	D-DC18B		
	MW-56D		LEVEL	D-DC18C		

DATA COLLECTION STATION	MONITORING WELL	XMTR	PROBE SENSOR	CONDUIT NUMBER	POWER (CONDUIT)	COMM. (CONDUIT)
DC-19 (2)	MW-55-045	T1	LEVEL	D-DC19A	SOLAR	RADIO
	MW-55-120		LEVEL			

DATA COLLECTION STATION	MONITORING WELL	XMTR	PROBE SENSOR	CONDUIT NUMBER	POWER (CONDUIT)	COMM. (CONDUIT)
DC-20 (2)	MW-54-140	T1	LEVEL	D-DC20A	SOLAR	RADIO
	MW-54-085		LEVEL			
	MW-54-195		LEVEL			
	MW-Y-060		LEVEL	D-DC20B		
	MW-Y-120		LEVEL			
	MW-Y-220		LEVEL	D-DC20C		
	MW-Y-300		LEVEL			

DATA COLLECTION STATION	MONITORING WELL	XMTR	PROBE SENSOR	CONDUIT NUMBER	POWER (CONDUIT)	COMM. (CONDUIT)
DC-21 (2)	MW-X	T1	LEVEL	D-DC21A	SOLAR	RADIO

DATA COLLECTION STATION	MONITORING WELL	XMTR	PROBE SENSOR	CONDUIT NUMBER	POWER (CONDUIT)	COMM. (CONDUIT)
DC-22 (4)	MW-67-185	T1	LEVEL	D-DC22A	LP-REM (L-DC22)	REM-COM (D-DC22)
	MW-67-225		LEVEL			
	MW-67-260		LEVEL			
	MW-68BR-280		LEVEL	D-DC22B		
	MW-68-240		LEVEL			
	MW-68-180		LEVEL			

DATA COLLECTION STATION	MONITORING WELL	XMTR	PROBE SENSOR	CONDUIT NUMBER	POWER (CONDUIT)	COMM. (CONDUIT)
NODE 3	IRZ-23	T1	LEVEL	D-DC23A	N/A	N/A
	TW-3D		LEVEL	D-DC23B		
	TW-2D		LEVEL	D-DC23C		
	TW-2S		LEVEL	D-DC23D		

DRAWING REFERENCED NOTES:

1. SEE DWG E-16-04 THROUGH E-16-25 FOR DATA COLLECTION STATION LOCATIONS
2. RADIO COMMUNICATIONS FOR THIS DATA COLLETION SITE
3. NODE 3 WILL HOUSE THE LEVEL ANALYZER FOR THE WELLS IN THE AREA.
4. DATA COLLECTION STATION BEING SUPPLIED COMMUNICATIONS WITH FIBER.

- FINAL DESIGN - FOR AGENCY APPROVAL ONLY

REGISTERED PROFESSIONAL ENGINEER JOHN M. SIOCHI 20532 Exp. 9-30-17 ELECTRICAL STATE OF CALIFORNIA

FRISCH ENGINEERING, INC.
CONSULTING ELECTRICAL ENGINEERS
13405 FOLSOM BLVD, UNIT 600
FOLSOM, CA 95630
PH 916 353 1025
WWW.FRISCHENGINEERING.COM

ARCADIS

NO.	DATE	DESCRIPTION	GM/SPEC	DWN	CHKD	SUPV	APVD BY
2	11/18/15	FINAL DESIGN		MBY	TPF	JMS	RAO
1	12/30/14	SUPPLEMENTAL PRE-FINAL (90%) DESIGN		MBY			TPF
0	9/8/14	PRE-FINAL (90%) DESIGN		MBY			TPF

REVISIONS

APPROVED BY	
RAO	SO
	SUPV JMS
	DSGN MBY
	DWN MBY
	CHKD TPF
	OK JMS
	DATE
	SCALES N/A

TOPOCK GROUNDWATER REMEDIATION PROJECT
MONITORING WELLS DATA COLLECTION STATIONS SITE PLAN
GAS TRANSMISSION & DISTRIBUTION
PACIFIC GAS AND ELECTRIC COMPANY
SAN FRANCISCO, CALIFORNIA

MICROFILM	
BILL OF MATL	
DWG LIST	
SUPSDS	
SUPSD BY	
SHEET NO.	of SHEETS
E-16-01	REV 0

FILENAME: FE-E-XXX-1601AD.DWG
PLOT DATE: Nov 04, 2015 PLOT TIME: 3:19:08pm
N1808

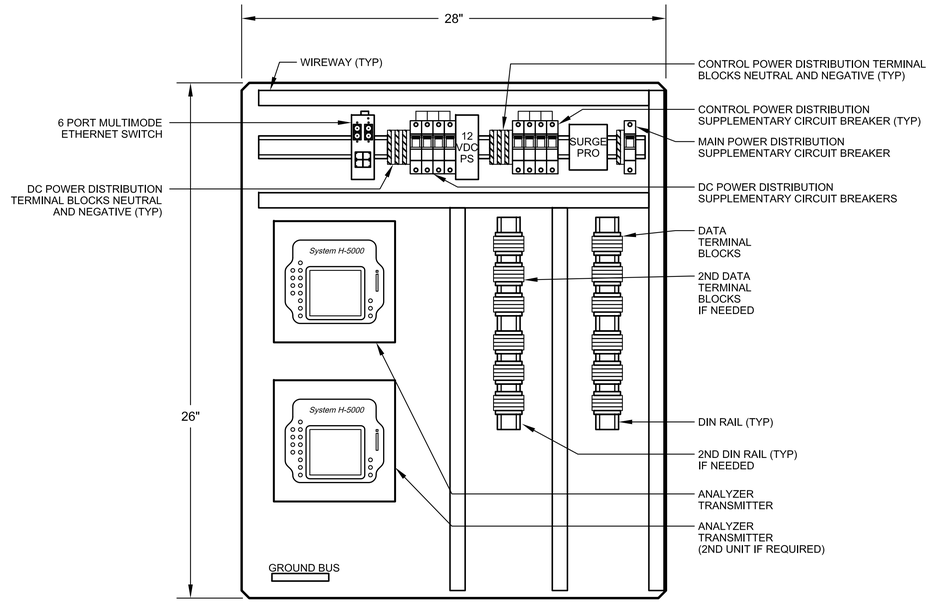

BACKPAN LAYOUT

NOT TO SCALE

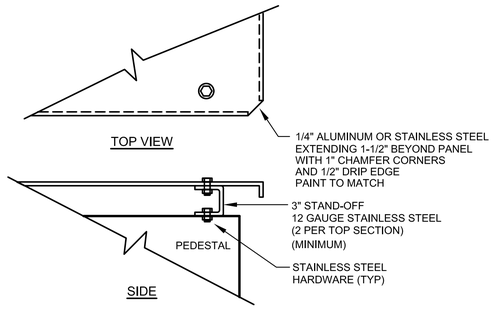

SUNSHADE DETAIL (PARTIAL)

1 SD — DETAIL, NTS

SUNSHADE NOTES:

1. ORIENT DATA COLLECTION PANELS AS NOTED IN PLAN.

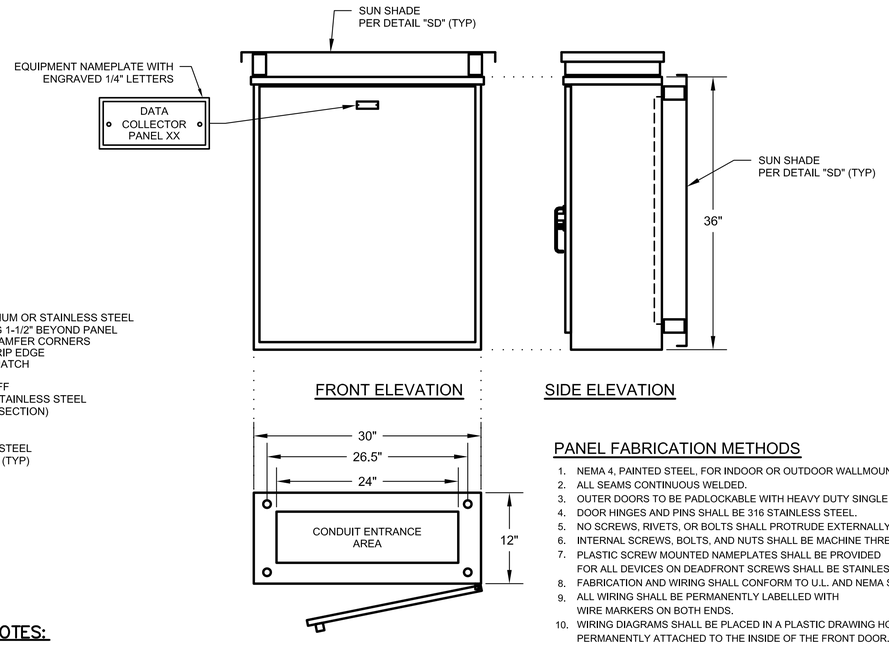

PANEL FABRICATION METHODS

1. NEMA 4, PAINTED STEEL, FOR INDOOR OR OUTDOOR WALLMOUNT INSTALLATION.
2. ALL SEAMS CONTINUOUS WELDED.
3. OUTER DOORS TO BE PADLOCKABLE WITH HEAVY DUTY SINGLE POINT LATCHES.
4. DOOR HINGES AND PINS SHALL BE 316 STAINLESS STEEL.
5. NO SCREWS, RIVETS, OR BOLTS SHALL PROTRUDE EXTERNALLY.
6. INTERNAL SCREWS, BOLTS, AND NUTS SHALL BE MACHINE THREAD.
7. PLASTIC SCREW MOUNTED NAMEPLATES SHALL BE PROVIDED FOR ALL DEVICES ON DEADFRONT SCREWS SHALL BE STAINLESS STEEL.
8. FABRICATION AND WIRING SHALL CONFORM TO U.L. AND NEMA STANDARDS.
9. ALL WIRING SHALL BE PERMANENTLY LABELLED WITH WIRE MARKERS ON BOTH ENDS.
10. WIRING DIAGRAMS SHALL BE PLACED IN A PLASTIC DRAWING HOLDER PERMANENTLY ATTACHED TO THE INSIDE OF THE FRONT DOOR.
11. AS - BUILT WIRING DIAGRAMS SHALL BE SHIPPED WITH EQUIPMENT.

DATA COLLECTION PANEL

2 DCP — DETAIL, NTS

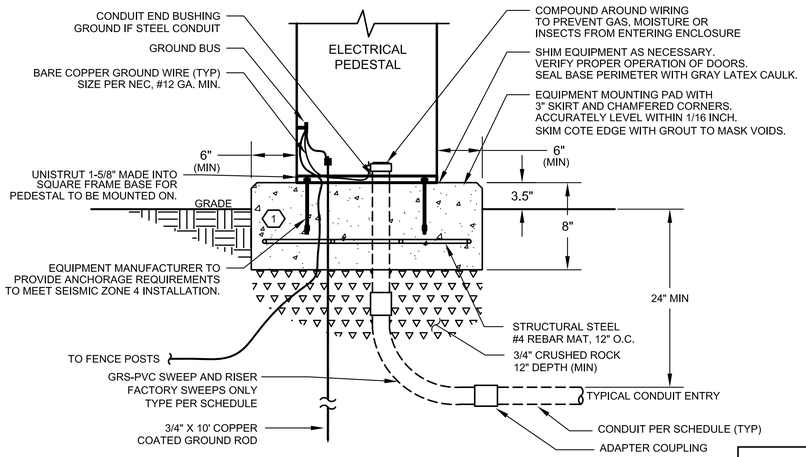

PEDESTAL CONCRETE PAD DETAIL

3 PCP — DETAIL, NTS

PEDESTAL CONCRETE PAD NOTES:

1. PEDESTAL PAD SIZE PER SITE PLANS

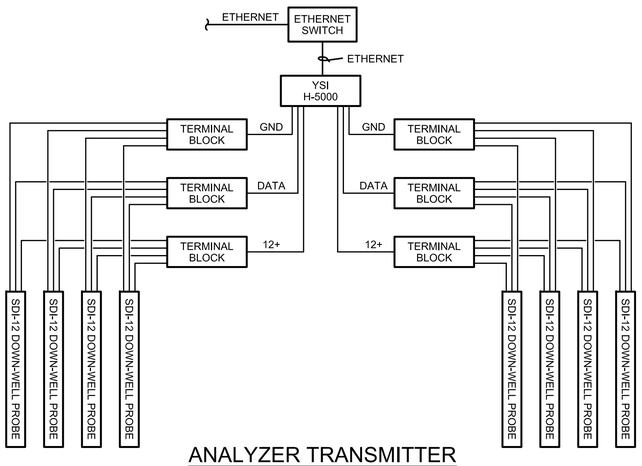

ANALYZER TRANSMITTER SENSOR CONNECTION DIAGRAM

UP TO 8 SENSORS, PER PLAN

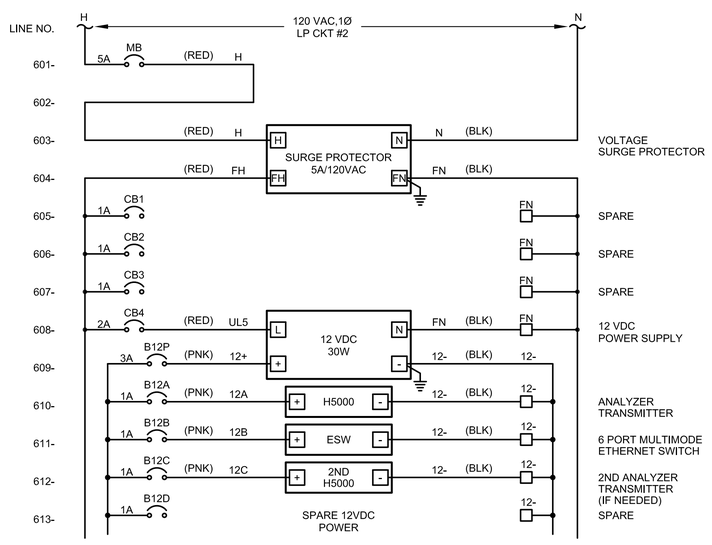

POWER DISTRIBUTION DIAGRAM

DRAFT
NOT FOR CONSTRUCTION

NO.	DATE	DESCRIPTION	GM/SPEC	DWN	CHKD	SUPV	APVD BY
1	11/18/15	FINAL DESIGN		MBY	TPF	JMS	RAO
0	9/8/14	PRE-FINAL (90%) DESIGN		MBY			TPF

REVISIONS

APPROVED BY: TPF

SO
SUPV TPF
DSGN MBY
DWN MBY, NC
CHKD MF
OK TPF
DATE
SCALES N/A

TOPOCK GROUNDWATER REMEDIATION PROJECT
DATA COLLECTION PANEL
MONITORING WELL
ELEVATION (TYPICAL)
GAS TRANSMISSION & DISTRIBUTION
PACIFIC GAS AND ELECTRIC COMPANY
SAN FRANCISCO, CALIFORNIA

MICROFILM
BILL OF MATL
DWG LIST
SUPSDS
SUPSD BY
SHEET NO. E-16-02 of SHEETS
REV 0

FRISCH ENGINEERING, INC.
CONSULTING ELECTRICAL ENGINEERS
13405 FOLSOM BLVD, UNIT 600
FOLSOM, CA 95630
PH 916 353 1025
WWW.FRISCHENGINEERING.COM

CH2MHILL®

N1808

PLOT DATE: Nov 04, 2015 PLOT TIME: 3:19:00pm
FILENAME: FE-E-XXX-1602AD.DWG

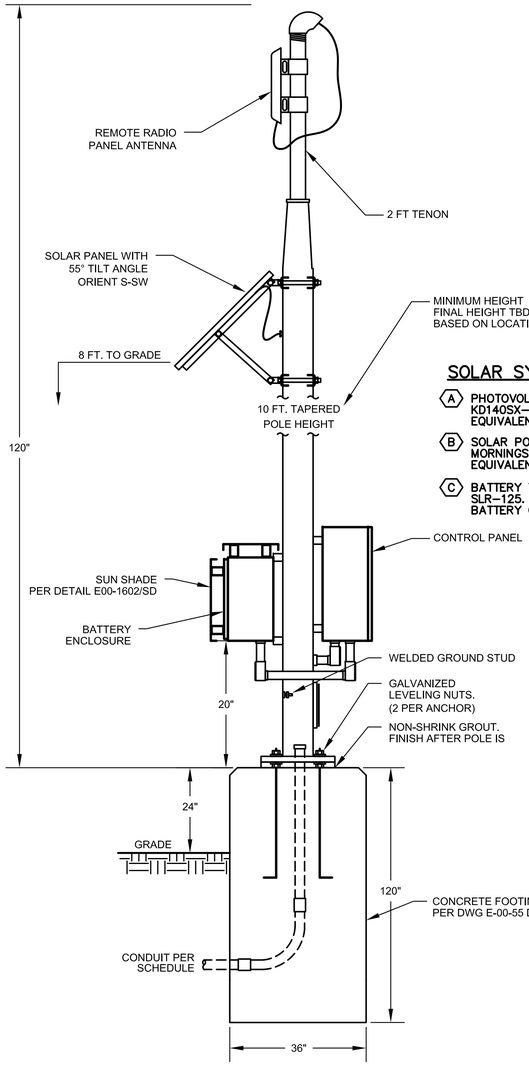

ELEVATION

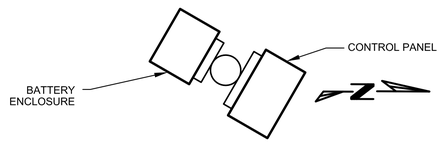

OVERHEAD ORIENTATION

TYPICAL MONITORING WELL ANTENNA ELEVATION

NOT TO SCALE

NOTES:

1. ORIENT BATTERY AND CONTROL PANELS AS NOTED IN PLAN.

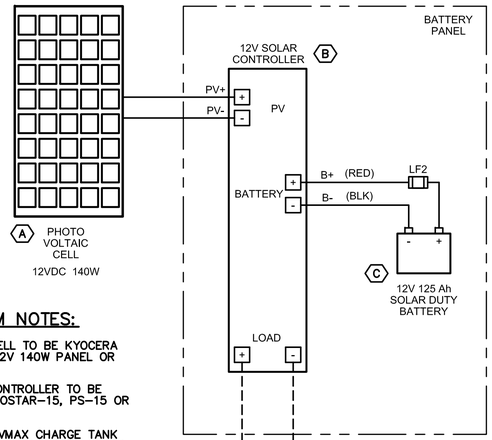

SOLAR SYSTEM NOTES:

A. PHOTOVOLTAIC CELL TO BE KYOCERA KD140SX–UFBS 12V 140W PANEL OR EQUIVALENT.

B. SOLAR POWER CONTROLLER TO BE MORNINGSTAR PROSTAR–15, PS–15 OR EQUIVALENT.

C. BATTERY TO BE VMAX CHARGE TANK SLR–125. 125Ah HEAVY DUTY SOLAR BATTERY OR EQUIVALENT.

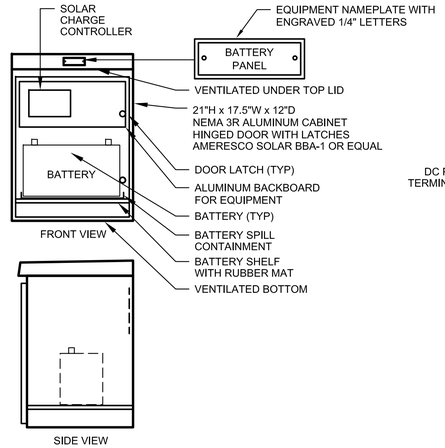

BATTERY ENCLOSURE

NOT TO SCALE, OUTER DOOR NOT SHOWN

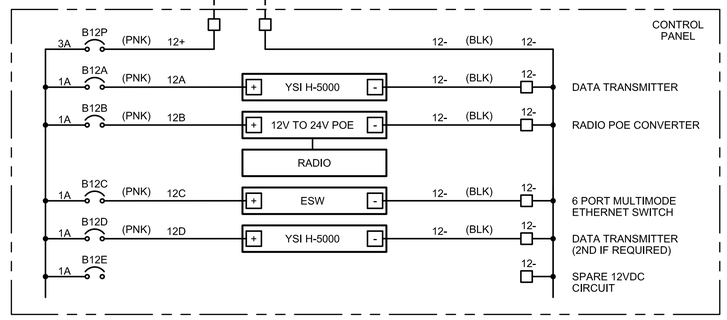

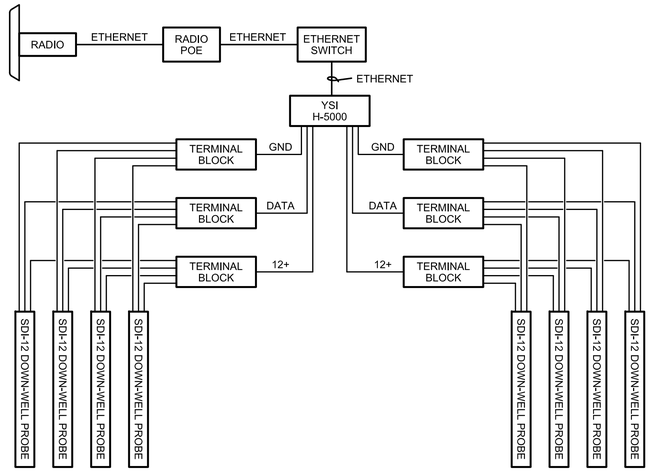

SENSOR CONNECTION DIAGRAM

UP TO 8 SENSORS, PER PLAN

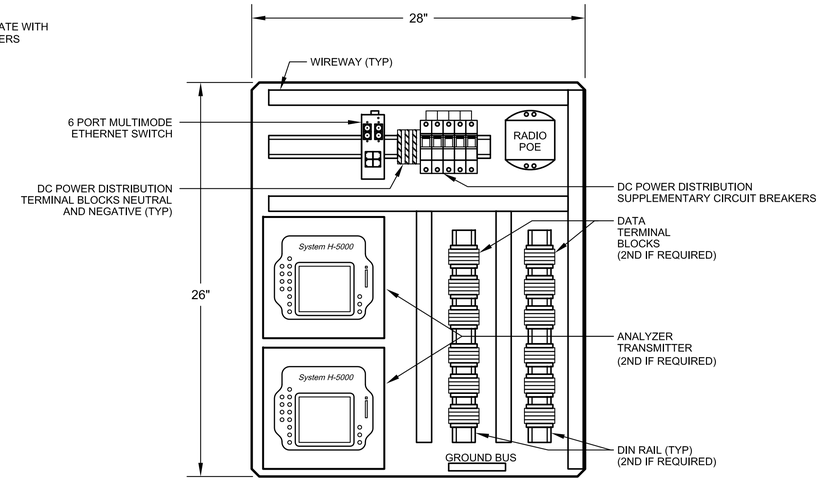

BACKPAN LAYOUT

NOT TO SCALE

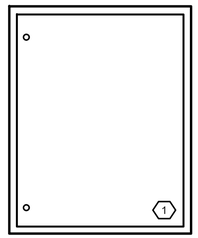

DOOR FRONT VIEW

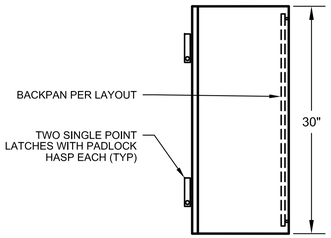

SIDE ELEVATION

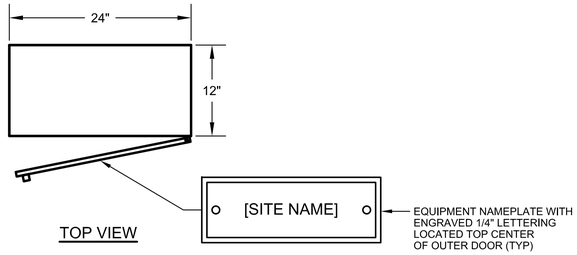

TOP VIEW

CONTROL PANEL

NOT TO SCALE

DRAWING REFERENCED NOTES:

1. CONTROL ENCLOSURE SHALL BE HOFFMAN CONCEPT MODEL NUMBER CSD 302412 PAINTED STEEL CONSTRUCTION OR EQUAL. PROVIDE DOOR LATCHES, BACKPAN, AND ANY OTHER PARTS TO COMPLETE PANEL.

DRAFT
NOT FOR CONSTRUCTION

FRISCH ENGINEERING, INC.
CONSULTING ELECTRICAL ENGINEERS
13405 FOLSOM BLVD, UNIT 600
FOLSOM, CA 95630
PH 916 353 1025
WWW.FRISCHENGINEERING.COM

CH2MHILL®

NO.	DATE	DESCRIPTION	GM/SPEC	DWN	CHKD	SUPV	APVD BY
1	11/18/15	FINAL DESIGN		MBY	TPF	JMS	RAO
0	9/8/14	PRE-FINAL (90%) DESIGN		MBY			TPF

REVISIONS

APPROVED BY	
TPF	

SO	
SUPV	TPF
DSGN	MBY
DWN	MBY, NC
CHKD	MF
OK	TPF
DATE	
SCALES	N/A

TOPOCK GROUNDWATER REMEDIATION PROJECT
DATA COLLECTION PANEL
RADIO MONITORING WELL
ELEVATION (TYPICAL)
GAS TRANSMISSION & DISTRIBUTION
PACIFIC GAS AND ELECTRIC COMPANY
SAN FRANCISCO, CALIFORNIA

MICROFILM	
BILL OF MATL	
DWG LIST	
SUPSDS	
SUPSD BY	
SHEET NO.	of SHEETS
E-16-03	REV 0

PLOT DATE: Nov 04, 2015 PLOT TIME: 3:18:50pm
FILENAME: FE-E-XXX-1603AD.DWG

N1808

ELECTRICAL PLAN NOTES:

1. SEE ELECTRICAL PLAN NOTES ON DRAWING E-00-02.

NOTES REFERENCED IN DRAWING:

1. INSTALL MONITORING WELL JUNCTION BOX PER DWG E-00-52/DET 6 (TYP).
2. ALL CONDUITS SHOWN ARE REQUIRED TO BE INSTALLED TO ENSURE A COMPLETE SYSTEM. WHERE POSSIBLE COORDINATE CONDUIT ROUTING WITH ELECTRICAL TRENCH SECTIONS SHOWN ON THE CIVIL DRAWINGS AND COMBINE CONDUIT IN COMMON TRENCH.
3. COORDINATE CONDUIT ENTRY IN TO INJECTION AND EXTRACTION WELL VAULTS WITH TCS LOOP, NTH IRZ, INNER LOOP AND MW-20 BENCH ELECTRICAL DRAWINGS.
4. MONITORING WELL LOCATIONS SHOWN ARE APPROXIMATE. ACTUAL MONITORING WELL LOCATIONS ARE DEFINED BY THE CIVIL PLANS AND SPECIFICATIONS.

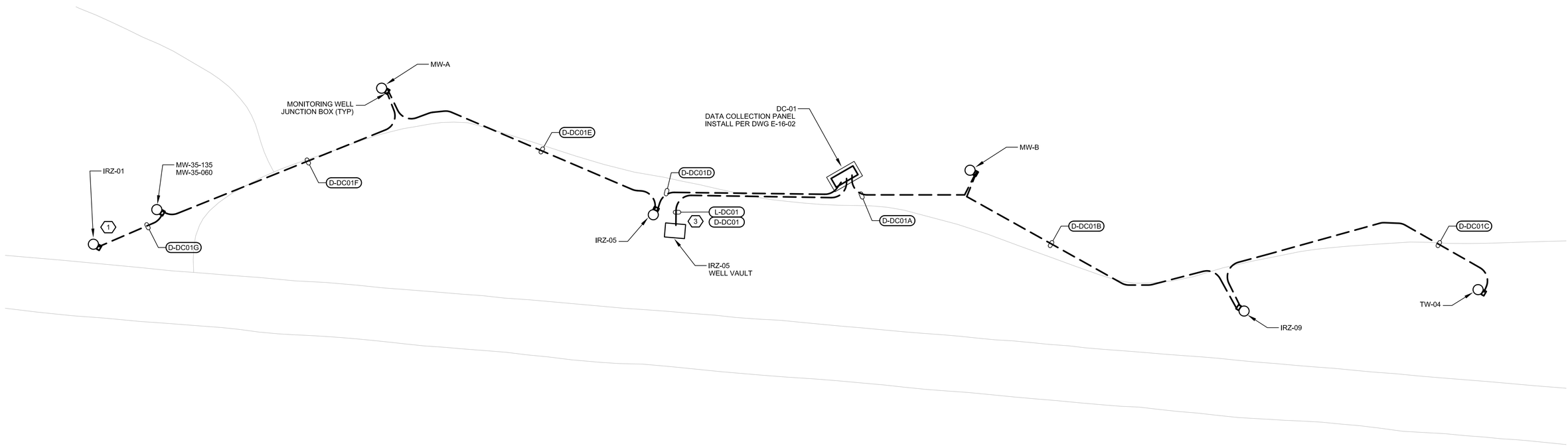

0 25 50 75

SCALE: 1"=25'

DATA COLLECTION STATION DC-01 (2)(4)

- FINAL DESIGN - FOR AGENCY APPROVAL ONLY

REGISTERED PROFESSIONAL ENGINEER
JOHN M. SIDDOWAY
20532
Exp. 9-30-17
ELECTRICAL
STATE OF CALIFORNIA

FRISCH ENGINEERING, INC.
CONSULTING ELECTRICAL ENGINEERS
13405 FOLSOM BLVD, UNIT 600
FOLSOM, CA 95630
PH 916 353 1025
WWW.FRISCHENGINEERING.COM

ARCADIS

NO.	DATE	DESCRIPTION	GM/SPEC	DWN	CHKD	SUPV	APVD BY
1	11/18/15	FINAL DESIGN		MBY	TPF	JMS	RAO
0	9/8/14	PRE-FINAL (90%) DESIGN		MBY			TPF

REVISIONS

APPROVED BY	
RAO	SO
	SUPV JMS
	DSGN MBY
	DWN MBY
	CHKD TPF
	OK JMS
	DATE
	SCALES N/A

TOPOCK GROUNDWATER REMEDIATION PROJECT
MONITORING WELL DATA COLLECTION SYSTEM SHEET 1
GAS TRANSMISSION & DISTRIBUTION
PACIFIC GAS AND ELECTRIC COMPANY
SAN FRANCISCO, CALIFORNIA

MICROFILM	
BILL OF MATL	
DWG LIST	
SUPSDS	
SUPSD BY	
SHEET NO. of SHEETS	
E-16-04	REV 0

PLOT DATE: Nov 04, 2015 PLOT TIME: 3:18:41pm
FILENAME: FE-E-XXX-1604AD.dwg

N1808

ELECTRICAL PLAN NOTES:

1. SEE ELECTRICAL PLAN NOTES ON DRAWING E-00-02.

NOTES REFERENCED IN DRAWING:

1. INSTALL MONITORING WELL JUNCTION BOX PER DWG E-00-52/DET 6 (TYP).
2. ALL CONDUITS SHOWN ARE REQUIRED TO BE INSTALLED TO ENSURE A COMPLETE SYSTEM. WHERE POSSIBLE COORDINATE CONDUIT ROUTING WITH ELECTRICAL TRENCH SECTIONS SHOWN ON THE CIVIL DRAWINGS AND COMBINE CONDUIT IN COMMON TRENCH.
3. COORDINATE CONDUIT ENTRY IN TO INJECTION AND EXTRACTION WELL VAULTS WITH TCS LOOP, NTH IRZ, INNER LOOP AND MW-20 BENCH ELECTRICAL DRAWINGS.
4. MONITORING WELL LOCATIONS SHOWN ARE APPROXIMATE. ACTUAL MONITORING WELL LOCATIONS ARE DEFINED BY THE CIVIL PLANS AND SPECIFICATIONS.

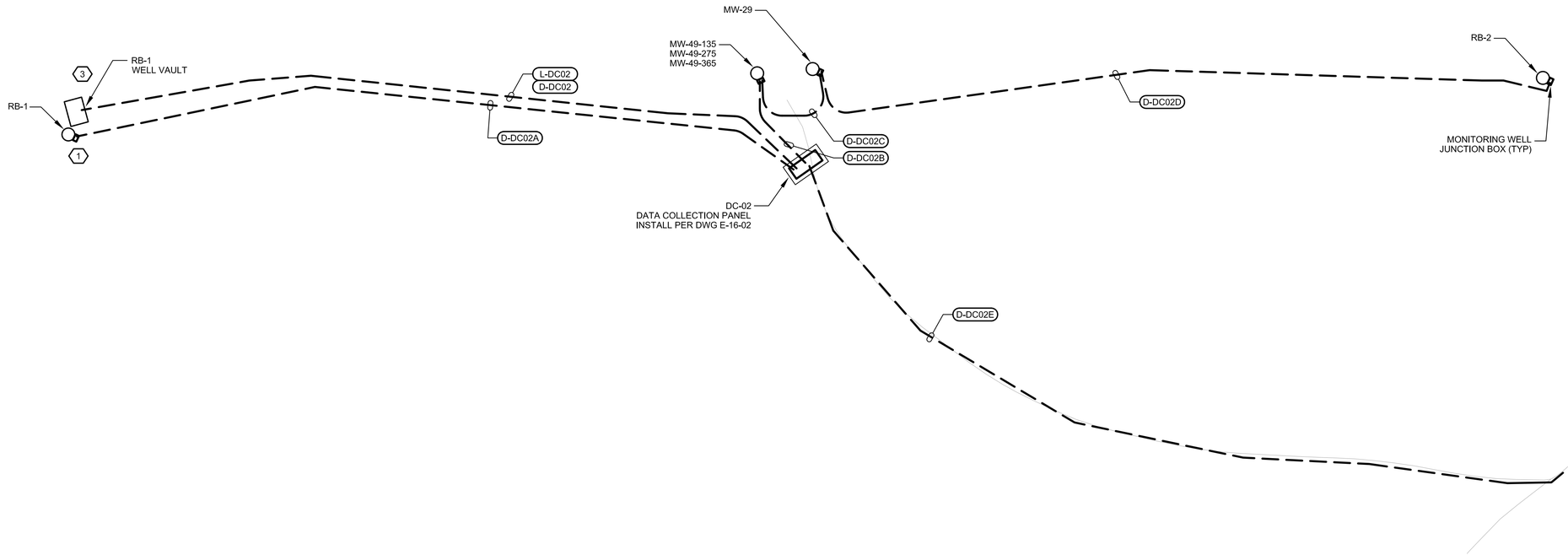

0 25 50 75

SCALE: 1"=25'

DATA COLLECTION STATION DC-02 (2)(4)

- FINAL DESIGN -
FOR AGENCY
APPROVAL ONLY

REGISTERED PROFESSIONAL ENGINEER
JOHN M. SIDDALL
20532
Exp. 9-30-17
ELECTRICAL
STATE OF CALIFORNIA

FRISCH ENGINEERING, INC.
CONSULTING ELECTRICAL ENGINEERS
13405 FOLSOM BLVD, UNIT 600
FOLSOM, CA 95630
PH 916 353 1025
WWW.FRISCHENGINEERING.COM

ARCADIS

NO.	DATE	DESCRIPTION	GM/SPEC	DWN	CHKD	SUPV	APVD BY
1	11/18/15	FINAL DESIGN		MBY	TPF	JMS	RAO
0	9/8/14	PRE-FINAL (90%) DESIGN		MBY			TPF

REVISIONS

APPROVED BY	
RAO	

SO	
SUPV	JMS
DSGN	MBY
DWN	MBY
CHKD	TPF
OK	JMS
DATE	
SCALES	N/A

TOPOCK GROUNDWATER REMEDIATION PROJECT
MONITORING WELL DATA COLLECTION SYSTEM SHEET 2
GAS TRANSMISSION & DISTRIBUTION
PACIFIC GAS AND ELECTRIC COMPANY
SAN FRANCISCO, CALIFORNIA

MICROFILM	
BILL OF MATL	
DWG LIST	
SUPSDS	
SUPSD BY	
SHEET NO.	of SHEETS
E-16-05	REV 0

PLOT DATE: Nov 04, 2015 PLOT TIME: 3:18:32pm
FILENAME: FE-E-XXX-160AD.dwg

N1808

ELECTRICAL PLAN NOTES:

1. SEE ELECTRICAL PLAN NOTES ON DRAWING E-00-02.

NOTES REFERENCED IN DRAWING:

1. INSTALL MONITORING WELL JUNCTION BOX PER DWG E-00-52/DET 6 (TYP).
2. ALL CONDUITS SHOWN ARE REQUIRED TO BE INSTALLED TO ENSURE A COMPLETE SYSTEM. WHERE POSSIBLE COORDINATE CONDUIT ROUTING WITH ELECTRICAL TRENCH SECTIONS SHOWN ON THE CIVIL DRAWINGS AND COMBINE CONDUIT IN COMMON TRENCH.
3. COORDINATE CONDUIT ENTRY IN TO INJECTION AND EXTRACTION WELL VAULTS WITH TCS LOOP, NTH IRZ, INNER LOOP AND MW-20 BENCH ELECTRICAL DRAWINGS.
4. MONITORING WELL LOCATIONS SHOWN ARE APPROXIMATE. ACTUAL MONITORING WELL LOCATIONS ARE DEFINED BY THE CIVIL PLANS AND SPECIFICATIONS.

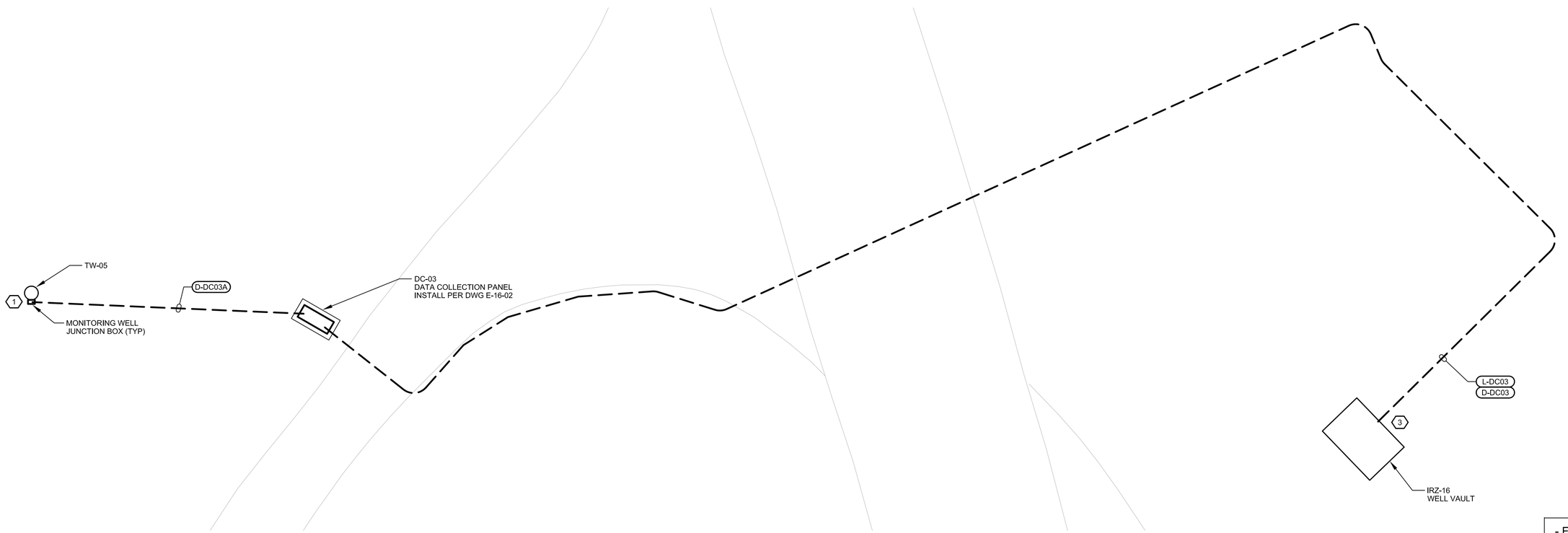

0 8 16 24

SCALE: 1"=8'

DATA COLLECTION STATION DC-03 (2)(4)

N

- FINAL DESIGN - FOR AGENCY APPROVAL ONLY

REGISTERED PROFESSIONAL ENGINEER
JOHN M. SIOCHI
20532
Exp. 9-30-17
ELECTRICAL
STATE OF CALIFORNIA

FRISCH ENGINEERING, INC.
CONSULTING ELECTRICAL ENGINEERS
13405 FOLSOM BLVD, UNIT 600
FOLSOM, CA 95630
PH 916 353 1025
WWW.FRISCHENGINEERING.COM

ARCADIS

NO.	DATE	DESCRIPTION	GM/SPEC	DWN	CHKD	SUPV	APVD BY
1	11/18/15	FINAL DESIGN		MBY	TPF	JMS	RAO
0	9/8/14	PRE-FINAL (90%) DESIGN		MBY			TPF

REVISIONS

APPROVED BY	
RAO	SO
	SUPV JMS
	DSGN MBY
	DWN MBY
	CHKD TPF
	OK JMS
	DATE
	SCALES N/A

TOPOCK GROUNDWATER REMEDIATION PROJECT
MONITORING WELL
DATA COLLECTION SYSTEM
SHEET 3
GAS TRANSMISSION & DISTRIBUTION
PACIFIC GAS AND ELECTRIC COMPANY
SAN FRANCISCO, CALIFORNIA

MICROFILM	
BILL OF MATL	
DWG LIST	
SUPSDS	
SUPSD BY	
SHEET NO.	of SHEETS
E-16-06	REV 0

FILENAME: FE-EXXX-160AD.dwg
PLOT DATE: Nov 04, 2015 PLOT TIME: 3:18:24pm
N1808

ELECTRICAL PLAN NOTES:

1. SEE ELECTRICAL PLAN NOTES ON DRAWING E-00-02.

NOTES REFERENCED IN DRAWING:

1. INSTALL MONITORING WELL JUNCTION BOX PER DWG E-00-52/DET 6 (TYP).
2. ALL CONDUITS SHOWN ARE REQUIRED TO BE INSTALLED TO ENSURE A COMPLETE SYSTEM. WHERE POSSIBLE COORDINATE CONDUIT ROUTING WITH ELECTRICAL TRENCH SECTIONS SHOWN ON THE CIVIL DRAWINGS AND COMBINE CONDUIT IN COMMON TRENCH.
3. COORDINATE CONDUIT ENTRY IN TO INJECTION AND EXTRACTION WELL VAULTS WITH TCS LOOP, NTH IRZ, INNER LOOP AND MW-20 BENCH ELECTRICAL DRAWINGS.
4. MONITORING WELL LOCATIONS SHOWN ARE APPROXIMATE. ACTUAL MONITORING WELL LOCATIONS ARE DEFINED BY THE CIVIL PLANS AND SPECIFICATIONS.

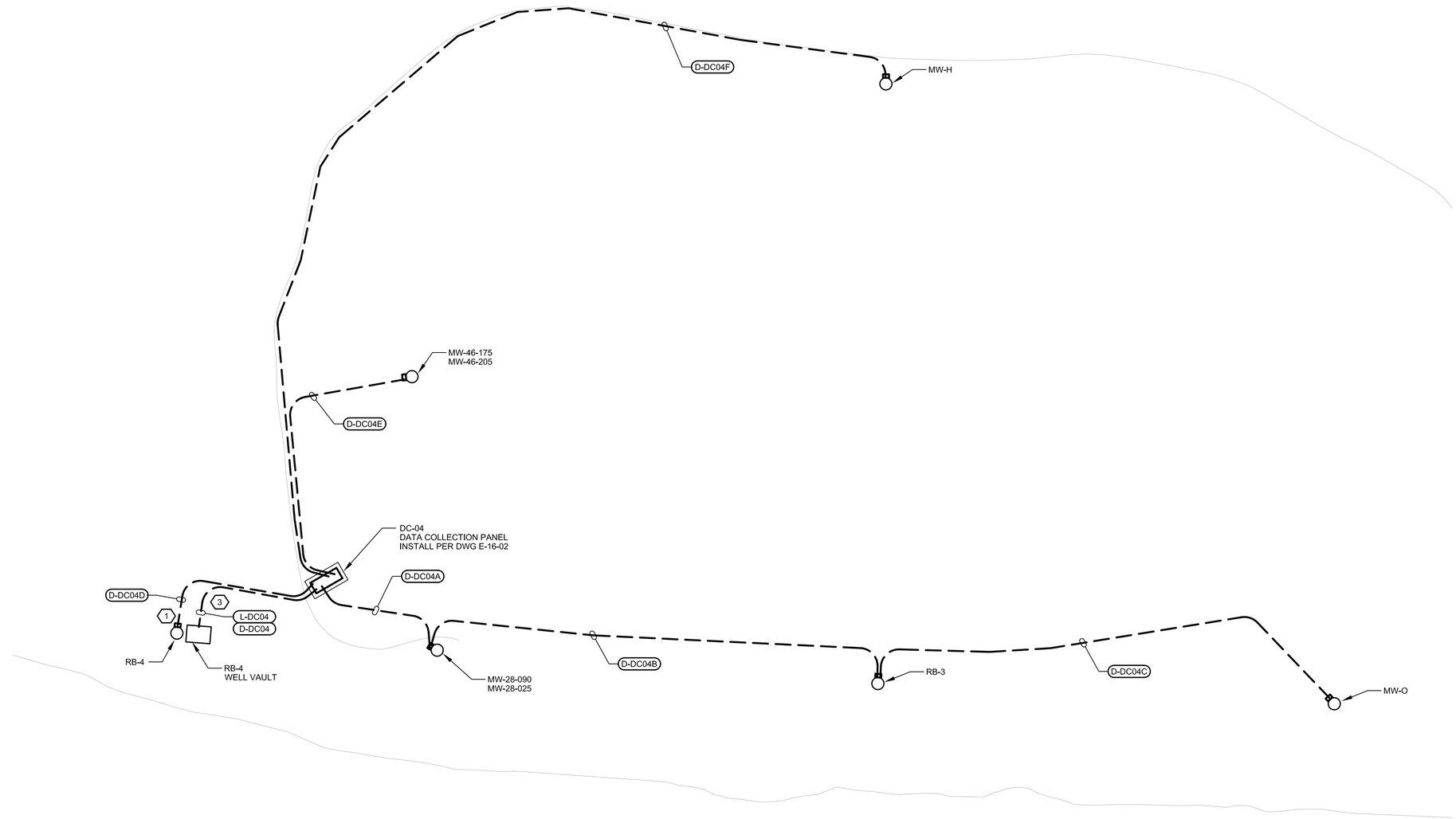

0 25 50 75

SCALE: 1"=25'

DATA COLLECTION STATION DC-04 (2)(4)

- FINAL DESIGN - FOR AGENCY APPROVAL ONLY

REGISTERED PROFESSIONAL ENGINEER
JOHN M. SIDOTI
20532
Exp. 9-30-17
ELECTRICAL
STATE OF CALIFORNIA

FRISCH ENGINEERING, INC.
CONSULTING ELECTRICAL ENGINEERS
13405 FOLSOM BLVD, UNIT 600
FOLSOM, CA 95630
PH 916 353 1025
WWW.FRISCHENGINEERING.COM

ARCADIS

NO.	DATE	DESCRIPTION	GM/SPEC	DWN	CHKD	SUPV	APVD BY
1	11/18/15	FINAL DESIGN	MBY	TPF	JMS	RAO	
0	9/8/14	PRE-FINAL (90%) DESIGN	MBY			TPF	

REVISIONS

APPROVED BY	
RAO	
SO	
SUPV	JMS
DSGN	MBY
DWN	MBY
CHKD	TPF
OK	JMS
DATE	
SCALES	N/A

TOPOCK GROUNDWATER REMEDIATION PROJECT
MONITORING WELL DATA COLLECTION SYSTEM SHEET 4
GAS TRANSMISSION & DISTRIBUTION
PACIFIC GAS AND ELECTRIC COMPANY
SAN FRANCISCO, CALIFORNIA

MICROFILM	
BILL OF MATL	
DWG LIST	
SUPSDS	
SUPSD BY	
SHEET NO.	of SHEETS
E-16-07	REV 0

PLOT DATE: Nov 04, 2015 PLOT TIME: 3:18:18pm
FILENAME: FE-E-XXX-1604AD.dwg
N180B

ELECTRICAL PLAN NOTES:

1. SEE ELECTRICAL PLAN NOTES ON DRAWING E-00-02.

NOTES REFERENCED IN DRAWING:

1. INSTALL MONITORING WELL JUNCTION BOX PER DWG E-00-52/DET 6 (TYP).
2. ALL CONDUITS SHOWN ARE REQUIRED TO BE INSTALLED TO ENSURE A COMPLETE SYSTEM. WHERE POSSIBLE COORDINATE CONDUIT ROUTING WITH ELECTRICAL TRENCH SECTIONS SHOWN ON THE CIVIL DRAWINGS AND COMBINE CONDUIT IN COMMON TRENCH.
3. COORDINATE CONDUIT ENTRY IN TO INJECTION AND EXTRACTION WELL VAULTS WITH TCS LOOP, NTH IRZ, INNER LOOP AND MW-20 BENCH ELECTRICAL DRAWINGS.
4. MONITORING WELL LOCATIONS SHOWN ARE APPROXIMATE. ACTUAL MONITORING WELL LOCATIONS ARE DEFINED BY THE CIVIL PLANS AND SPECIFICATIONS.

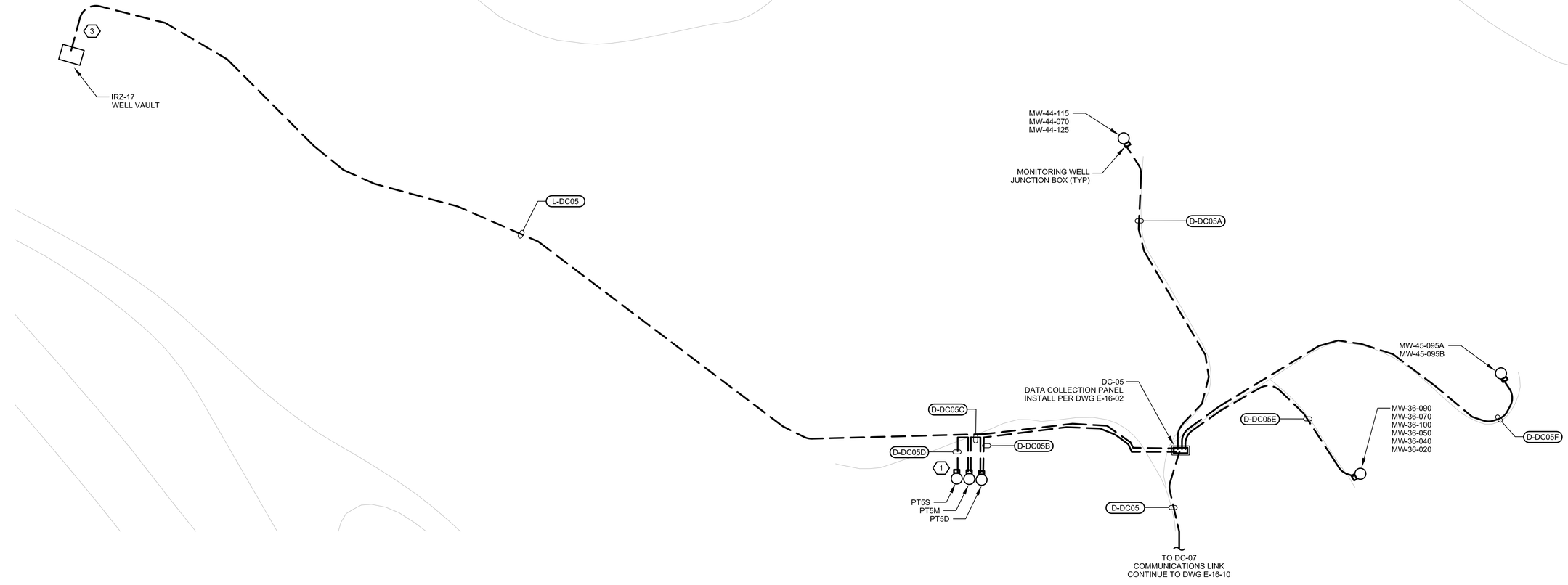

0 25 50 75
SCALE: 1"=25'

DATA COLLECTION STATION DC-05 (2)(4)

- FINAL DESIGN -
FOR AGENCY
APPROVAL ONLY

REGISTERED PROFESSIONAL ENGINEER
JOHN M. SIOCHI
20532
Exp. 9-30-17
ELECTRICAL
STATE OF CALIFORNIA

FRISCH ENGINEERING, INC.
CONSULTING ELECTRICAL ENGINEERS
13405 FOLSOM BLVD, UNIT 600
FOLSOM, CA 95630
PH 916 353 1025
WWW.FRISCHENGINEERING.COM

ARCADIS

NO.	DATE	DESCRIPTION	GM/SPEC	DWN	CHKD	SUPV	APVD BY
1	11/18/15	FINAL DESIGN		MBY	TPF	JMS	RAO
0	9/8/14	PRE-FINAL (90%) DESIGN		MBY			TPF

REVISIONS

APPROVED BY	
RAO	SO
	SUPV JMS
	DSGN MBY
	DWN MBY
	CHKD TPF
	OK JMS
	DATE
	SCALES N/A

TOPOCK GROUNDWATER REMEDIATION PROJECT
MONITORING WELL
DATA COLLECTION SYSTEM
SHEET 5
GAS TRANSMISSION & DISTRIBUTION
PACIFIC GAS AND ELECTRIC COMPANY
SAN FRANCISCO, CALIFORNIA

MICROFILM	
BILL OF MATL	
DWG LIST	
SUPSDS	
SUPSD BY	
SHEET NO.	of SHEETS
E-16-08	REV 0

FILENAME: FE-E-XXX-1604AD.dwg
PLOT DATE: Nov 04, 2015 PLOT TIME: 3:18:11pm
N1806

ELECTRICAL PLAN NOTES:

1. SEE ELECTRICAL PLAN NOTES ON DRAWING E-00-02.

NOTES REFERENCED IN DRAWING:

1. INSTALL MONITORING WELL JUNCTION BOX PER DWG E-00-52/DET 6 (TYP).
2. ALL CONDUITS SHOWN ARE REQUIRED TO BE INSTALLED TO ENSURE A COMPLETE SYSTEM. WHERE POSSIBLE COORDINATE CONDUIT ROUTING WITH ELECTRICAL TRENCH SECTIONS SHOWN ON THE CIVIL DRAWINGS AND COMBINE CONDUIT IN COMMON TRENCH.
3. COORDINATE CONDUIT ENTRY IN TO INJECTION AND EXTRACTION WELL VAULTS WITH TCS LOOP, NTH IRZ, INNER LOOP AND MW-20 BENCH ELECTRICAL DRAWINGS.
4. MONITORING WELL LOCATIONS SHOWN ARE APPROXIMATE. ACTUAL MONITORING WELL LOCATIONS ARE DEFINED BY THE CIVIL PLANS AND SPECIFICATIONS.

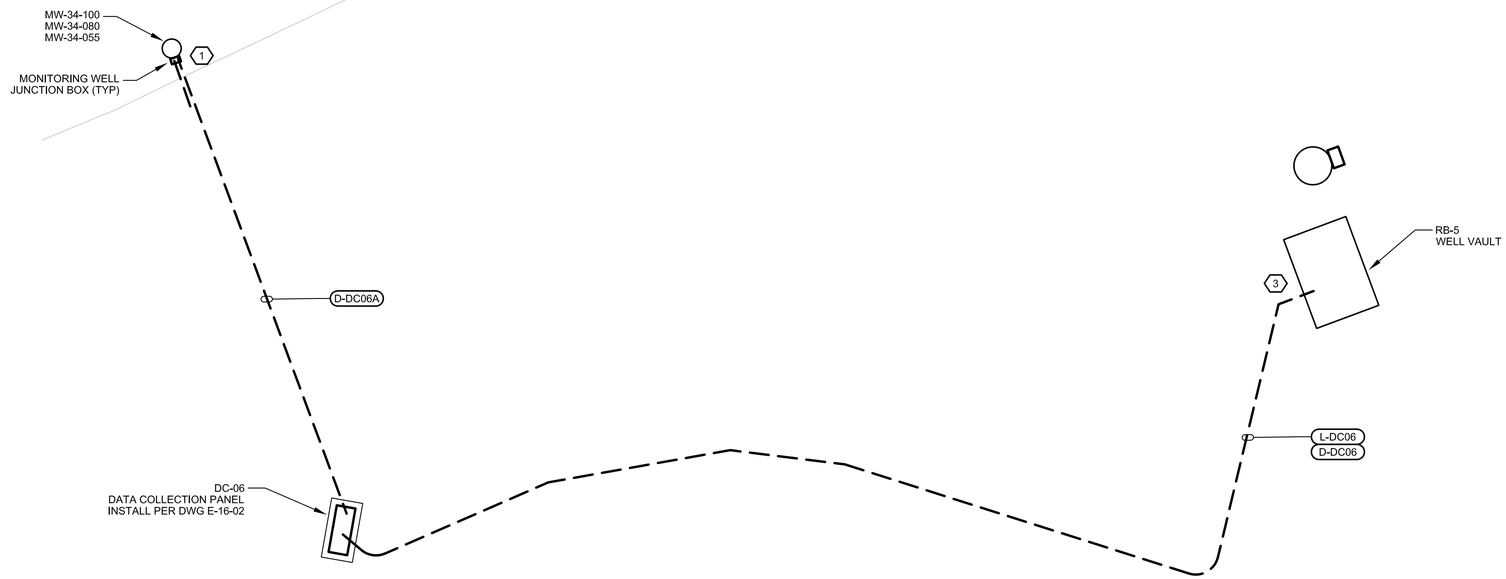

0 8 16 24

SCALE: 1"=8'

DATA COLLECTION STATION DC-06 (2)(4)

- FINAL DESIGN - FOR AGENCY APPROVAL ONLY

REGISTERED PROFESSIONAL ENGINEER
JOHN M. SIDDOWAY
20532
Exp. 9-30-17
ELECTRICAL
STATE OF CALIFORNIA

FRISCH ENGINEERING, INC.
CONSULTING ELECTRICAL ENGINEERS
13405 FOLSOM BLVD, UNIT 600
FOLSOM, CA 95630
PH 916 353 1025
WWW.FRISCHENGINEERING.COM

ARCADIS

NO.	DATE	DESCRIPTION	GM/SPEC	DWN	CHKD	SUPV	APVD BY
1	11/18/15	FINAL DESIGN		MBY	TPF	JMS	RAO
0	9/8/14	PRE-FINAL (90%) DESIGN		MBY			TPF

REVISIONS

APPROVED BY	
RAO	SO
	SUPV JMS
	DSGN MBY
	DWN MBY
	CHKD TPF
	OK JMS
	DATE
	SCALES N/A

TOPOCK GROUNDWATER REMEDIATION PROJECT
MONITORING WELL
DATA COLLECTION SYSTEM
SHEET 6
GAS TRANSMISSION & DISTRIBUTION
PACIFIC GAS AND ELECTRIC COMPANY
SAN FRANCISCO, CALIFORNIA

MICROFILM	
BILL OF MATL	
DWG LIST	
SUPSDS	
SUPSD BY	
SHEET NO. of SHEETS	
E-16-09	REV 0

PLOT DATE: Nov 04, 2015 PLOT TIME: 3:18:04pm
FILENAME: FE-E-XXX-1604AD.dwg

N1808

ELECTRICAL PLAN NOTES:

1. SEE ELECTRICAL PLAN NOTES ON DRAWING E-00-02.

NOTES REFERENCED IN DRAWING:

1. INSTALL MONITORING WELL JUNCTION BOX PER DWG E-00-52/DET 6 (TYP).
2. ALL CONDUITS SHOWN ARE REQUIRED TO BE INSTALLED TO ENSURE A COMPLETE SYSTEM. WHERE POSSIBLE COORDINATE CONDUIT ROUTING WITH ELECTRICAL TRENCH SECTIONS SHOWN ON THE CIVIL DRAWINGS AND COMBINE CONDUIT IN COMMON TRENCH.
3. COORDINATE CONDUIT ENTRY IN TO INJECTION AND EXTRACTION WELL VAULTS WITH TCS LOOP, NTH IRZ, INNER LOOP AND MW-20 BENCH ELECTRICAL DRAWINGS.
4. MONITORING WELL LOCATIONS SHOWN ARE APPROXIMATE. ACTUAL MONITORING WELL LOCATIONS ARE DEFINED BY THE CIVIL PLANS AND SPECIFICATIONS.

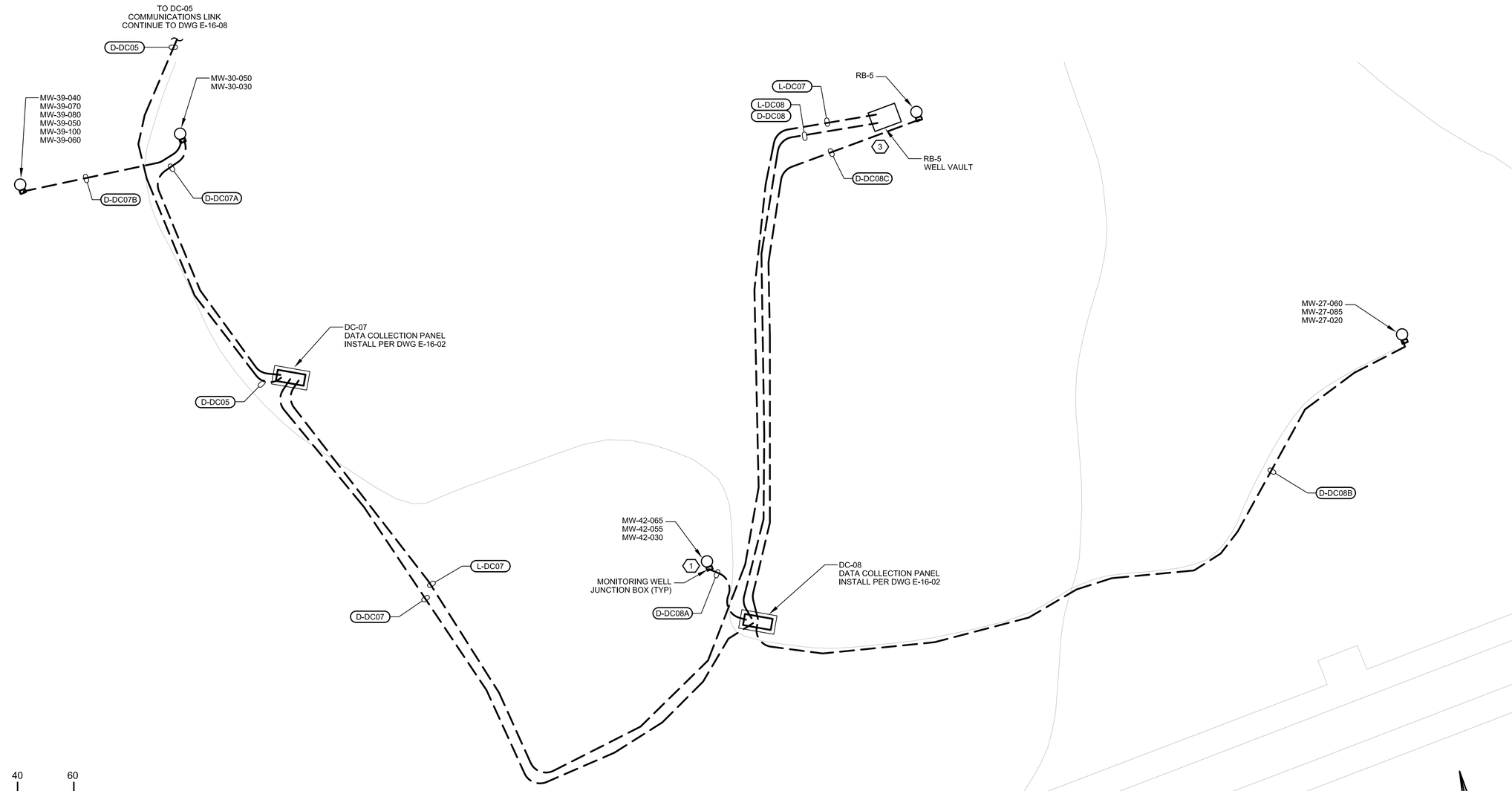

DATA COLLECTION STATIONS DC-07 AND DC-08 (2)(4)

- FINAL DESIGN -
FOR AGENCY
APPROVAL ONLY

REGISTERED PROFESSIONAL ENGINEER
JOHN M. SIDOTI
20532
Exp. 9-30-17
ELECTRICAL
STATE OF CALIFORNIA

FRISCH ENGINEERING, INC.
CONSULTING ELECTRICAL ENGINEERS
13405 FOLSOM BLVD, UNIT 600
FOLSOM, CA 95630
PH 916 353 1025
WWW.FRISCHENGINEERING.COM

ARCADIS

NO.	DATE	DESCRIPTION	GM/SPEC	DWN	CHKD	SUPV	APVD BY
1	11/18/15	FINAL DESIGN		MBY	TPF	JMS	RAO
0	9/8/14	PRE-FINAL (90%) DESIGN		MBY			TPF

REVISIONS

APPROVED BY
RAO

SO	
SUPV	JMS
DSGN	MBY
DWN	MBY
CHKD	TPF
OK	JMS
DATE	
SCALES	N/A

TOPOCK GROUNDWATER REMEDIATION PROJECT
MONITORING WELL DATA COLLECTION SYSTEM SHEET 7
GAS TRANSMISSION & DISTRIBUTION
PACIFIC GAS AND ELECTRIC COMPANY
SAN FRANCISCO, CALIFORNIA

MICROFILM	
BILL OF MATL	
DWG LIST	
SUPSDS	
SUPSD BY	
SHEET NO.	of SHEETS
E-16-10	REV 0

PLOT DATE: Nov 04, 2015 PLOT TIME: 3:17:57pm
FILENAME: FE-E-XXX-1604AD.dwg

ELECTRICAL PLAN NOTES:

1. SEE ELECTRICAL PLAN NOTES ON DRAWING E-00-02.

NOTES REFERENCED IN DRAWING:

1. INSTALL MONITORING WELL JUNCTION BOX PER DWG E-00-52/DET 6 (TYP).
2. ALL CONDUITS SHOWN ARE REQUIRED TO BE INSTALLED TO ENSURE A COMPLETE SYSTEM. WHERE POSSIBLE COORDINATE CONDUIT ROUTING WITH ELECTRICAL TRENCH SECTIONS SHOWN ON THE CIVIL DRAWINGS AND COMBINE CONDUIT IN COMMON TRENCH.
3. COORDINATE CONDUIT ENTRY IN TO INJECTION AND EXTRACTION WELL VAULTS WITH TCS LOOP, NTH IRZ, INNER LOOP AND MW-20 BENCH ELECTRICAL DRAWINGS.
4. MONITORING WELL LOCATIONS SHOWN ARE APPROXIMATE. ACTUAL MONITORING WELL LOCATIONS ARE DEFINED BY THE CIVIL PLANS AND SPECIFICATIONS.

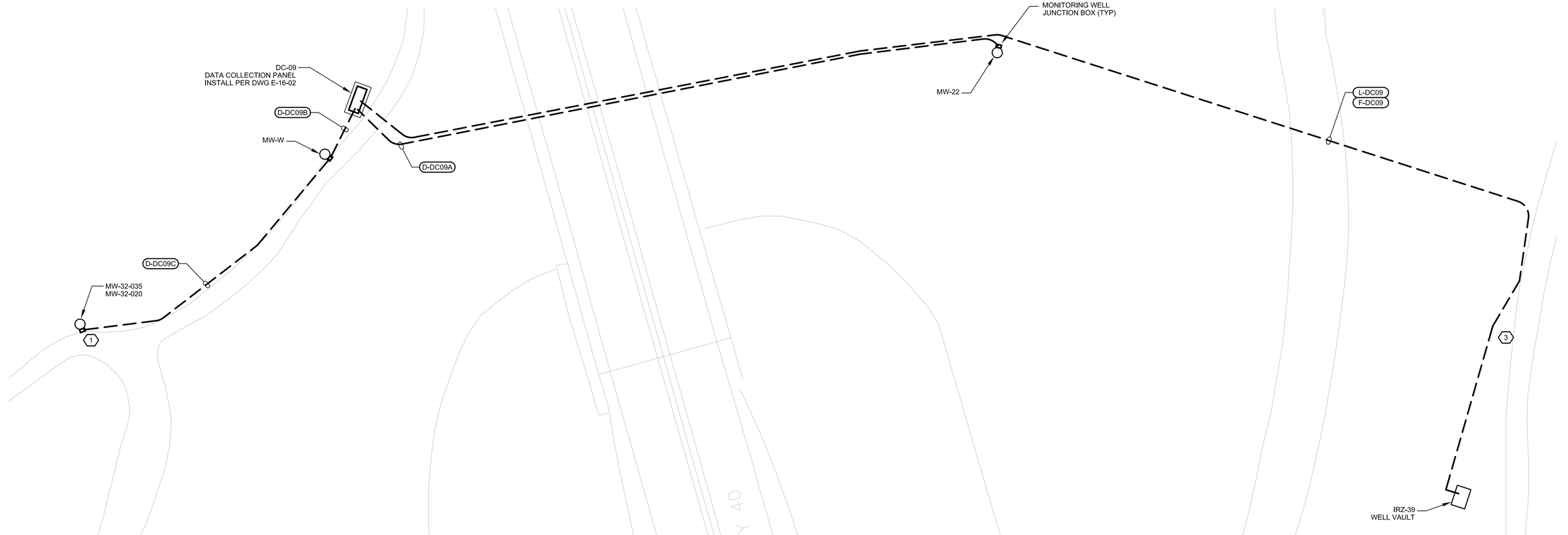

0 25 50 75
SCALE: 1"=25'

DATA COLLECTION STATIONS DC-09 (2)(4)

- FINAL DESIGN -
FOR AGENCY
APPROVAL ONLY

REGISTERED PROFESSIONAL ENGINEER
JOHN M. SIDDI
20532
Exp. 9-30-17
ELECTRICAL
STATE OF CALIFORNIA

FRISCH ENGINEERING, INC.
CONSULTING ELECTRICAL ENGINEERS
13405 FOLSOM BLVD, UNIT 600
FOLSOM, CA 95630
PH 916 353 1025
WWW.FRISCHENGINEERING.COM

ARCADIS

NO.	DATE	DESCRIPTION	GM/SPEC	DWN	CHKD	SUPV	APVD BY
1	11/18/15	FINAL DESIGN		MBY	TPF	JMS	RAO
0	9/8/14	PRE-FINAL (90%) DESIGN		MBY		TPF	

REVISIONS

APPROVED BY	RAO
SO	
SUPV	JMS
DSGN	MBY
DWN	MBY
CHKD	TPF
OK	JMS
DATE	
SCALES	N/A

TOPOCK GROUNDWATER REMEDIATION PROJECT
MONITORING WELL
DATA COLLECTION SYSTEM
SHEET 8
GAS TRANSMISSION & DISTRIBUTION
PACIFIC GAS AND ELECTRIC COMPANY
SAN FRANCISCO, CALIFORNIA

MICROFILM	
BILL OF MATL	
DWG LIST	
SUPSDS	
SUPSD BY	
SHEET NO.	of SHEETS
E-16-11	REV 0

PLOT DATE: Nov 04, 2015 PLOT TIME: 3:17:50pm
FILENAME: FE-E-XXX-160AD.dwg
N1808

ELECTRICAL PLAN NOTES:

1. SEE ELECTRICAL PLAN NOTES ON DRAWING E-00-02.

NOTES REFERENCED IN DRAWING:

1. INSTALL MONITORING WELL JUNCTION BOX PER DWG E-00-52/DET 6 (TYP).
2. ALL CONDUITS SHOWN ARE REQUIRED TO BE INSTALLED TO ENSURE A COMPLETE SYSTEM. WHERE POSSIBLE COORDINATE CONDUIT ROUTING WITH ELECTRICAL TRENCH SECTIONS SHOWN ON THE CIVIL DRAWINGS AND COMBINE CONDUIT IN COMMON TRENCH.
3. COORDINATE CONDUIT ENTRY IN TO INJECTION AND EXTRACTION WELL VAULTS WITH TCS LOOP, NTH IRZ, INNER LOOP AND MW-20 BENCH ELECTRICAL DRAWINGS.
4. MONITORING WELL LOCATIONS SHOWN ARE APPROXIMATE. ACTUAL MONITORING WELL LOCATIONS ARE DEFINED BY THE CIVIL PLANS AND SPECIFICATIONS.

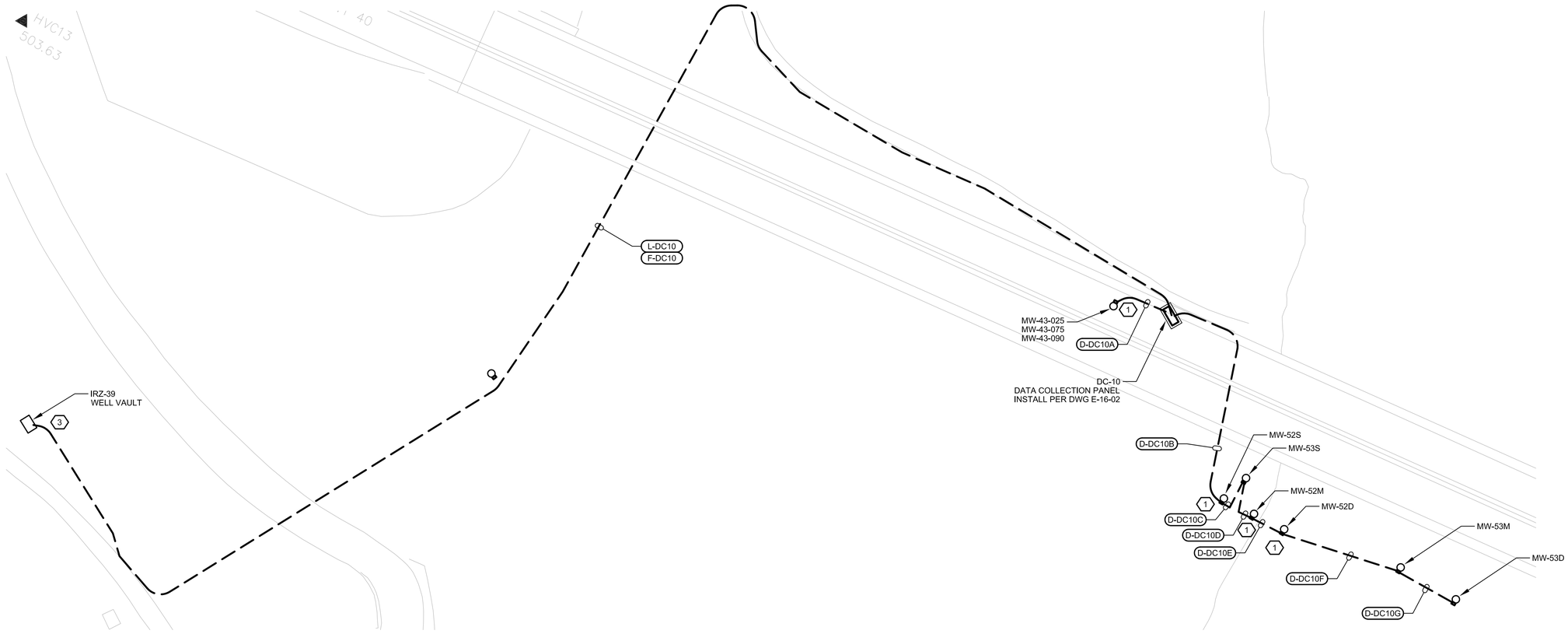

DATA COLLECTION STATION DC-10 (2)(4)

- FINAL DESIGN - FOR AGENCY APPROVAL ONLY

REGISTERED PROFESSIONAL ENGINEER
JOHN M. SIOOTIS
20532
Exp. 9-30-17
ELECTRICAL
STATE OF CALIFORNIA

FRISCH ENGINEERING, INC.
CONSULTING ELECTRICAL ENGINEERS
13405 FOLSOM BLVD, UNIT 600
FOLSOM, CA 95630
PH 916 353 1025
WWW.FRISCHENGINEERING.COM

ARCADIS

NO.	DATE	DESCRIPTION	GM/SPEC	DWN	CHKD	SUPV	APVD BY
1	11/18/15	FINAL DESIGN		MBY	TPF	JMS	RAO
0	9/8/14	PRE-FINAL (90%) DESIGN		MBY			TPF

REVISIONS

APPROVED BY	
RAO	SO
	SUPV JMS
	DSGN MBY
	DWN MBY
	CHKD TPF
	OK JMS
	DATE
	SCALES N/A

TOPOCK GROUNDWATER REMEDIATION PROJECT
MONITORING WELL
DATA COLLECTION SYSTEM
SHEET 9
GAS TRANSMISSION & DISTRIBUTION
PACIFIC GAS AND ELECTRIC COMPANY
SAN FRANCISCO, CALIFORNIA

MICROFILM	
BILL OF MATL	
DWG LIST	
SUPSDS	
SUPSD BY	
SHEET NO.	of SHEETS
E-16-12	REV 0

PLOT DATE: Nov 04, 2015 PLOT TIME: 3:17:44pm
FILENAME: FE-E-XXX-160AD.dwg

N1808

ELECTRICAL PLAN NOTES:

1. SEE ELECTRICAL PLAN NOTES ON DRAWING E-00-02.

NOTES REFERENCED IN DRAWING:

1. INSTALL MONITORING WELL JUNCTION BOX PER DWG E-00-52/DET 6 (TYP).
2. ALL CONDUITS SHOWN ARE REQUIRED TO BE INSTALLED TO ENSURE A COMPLETE SYSTEM. WHERE POSSIBLE COORDINATE CONDUIT ROUTING WITH ELECTRICAL TRENCH SECTIONS SHOWN ON THE CIVIL DRAWINGS AND COMBINE CONDUIT IN COMMON TRENCH.
3. COORDINATE CONDUIT ENTRY IN TO INJECTION AND EXTRACTION WELL VAULTS WITH TCS LOOP, NTH IRZ, INNER LOOP AND MW-20 BENCH ELECTRICAL DRAWINGS.
4. MONITORING WELL LOCATIONS SHOWN ARE APPROXIMATE. ACTUAL MONITORING WELL LOCATIONS ARE DEFINED BY THE CIVIL PLANS AND SPECIFICATIONS.

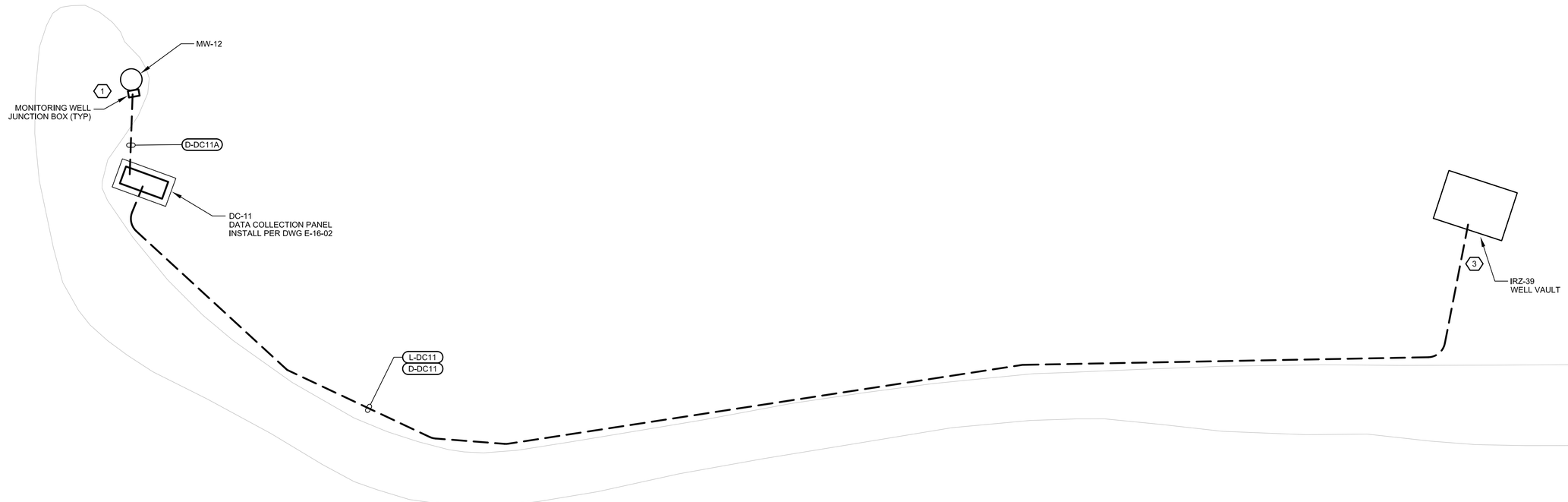

0 8 16 24

SCALE: 1"=8'

DATA COLLECTION STATION DC-11 (2)(4)

- FINAL DESIGN - FOR AGENCY APPROVAL ONLY

REGISTERED PROFESSIONAL ENGINEER JOHN M. SIGOTA 20532 Exp. 9-30-17 ELECTRICAL STATE OF CALIFORNIA

FRISCH ENGINEERING, INC.
CONSULTING ELECTRICAL ENGINEERS
13405 FOLSOM BLVD, UNIT 600
FOLSOM, CA 95630
PH 916 353 1025
WWW.FRISCHENGINEERING.COM

ARCADIS

NO.	DATE	DESCRIPTION	GM/SPEC	DWN	CHKD	SUPV	APVD BY
1	11/18/15	FINAL DESIGN		MBY	TPF	JMS	RAO
0	9/8/14	PRE-FINAL (90%) DESIGN		MBY		TPF	

REVISIONS

APPROVED BY	
RAO	

SO	
SUPV	JMS
DSGN	MBY
DWN	MBY
CHKD	TPF
OK	JMS
DATE	
SCALES	N/A

TOPOCK GROUNDWATER REMEDIATION PROJECT

MONITORING WELL DATA COLLECTION SYSTEM SHEET 10

GAS TRANSMISSION & DISTRIBUTION

PACIFIC GAS AND ELECTRIC COMPANY
SAN FRANCISCO, CALIFORNIA

MICROFILM	
BILL OF MATL	
DWG LIST	
SUPSDS	
SUPSD BY	
SHEET NO. of SHEETS	
E-16-13	REV 0

PLOT DATE: Nov 04, 2015 PLOT TIME: 3:17:37pm

FILENAME: FE-E-XXX-1604AD.dwg

N1808

ELECTRICAL PLAN NOTES:

1. SEE ELECTRICAL PLAN NOTES ON DRAWING E-00-02.

NOTES REFERENCED IN DRAWING:

1. INSTALL MONITORING WELL JUNCTION BOX PER DWG E-00-52/DET 6 (TYP).
2. ALL CONDUITS SHOWN ARE REQUIRED TO BE INSTALLED TO ENSURE A COMPLETE SYSTEM. WHERE POSSIBLE COORDINATE CONDUIT ROUTING WITH ELECTRICAL TRENCH SECTIONS SHOWN ON THE CIVIL DRAWINGS AND COMBINE CONDUIT IN COMMON TRENCH.
3. COORDINATE CONDUIT ENTRY IN TO INJECTION AND EXTRACTION WELL VAULTS WITH TCS LOOP, NTH IRZ, INNER LOOP AND MW-20 BENCH ELECTRICAL DRAWINGS.
4. MONITORING WELL LOCATIONS SHOWN ARE APPROXIMATE. ACTUAL MONITORING WELL LOCATIONS ARE DEFINED BY THE CIVIL PLANS AND SPECIFICATIONS.

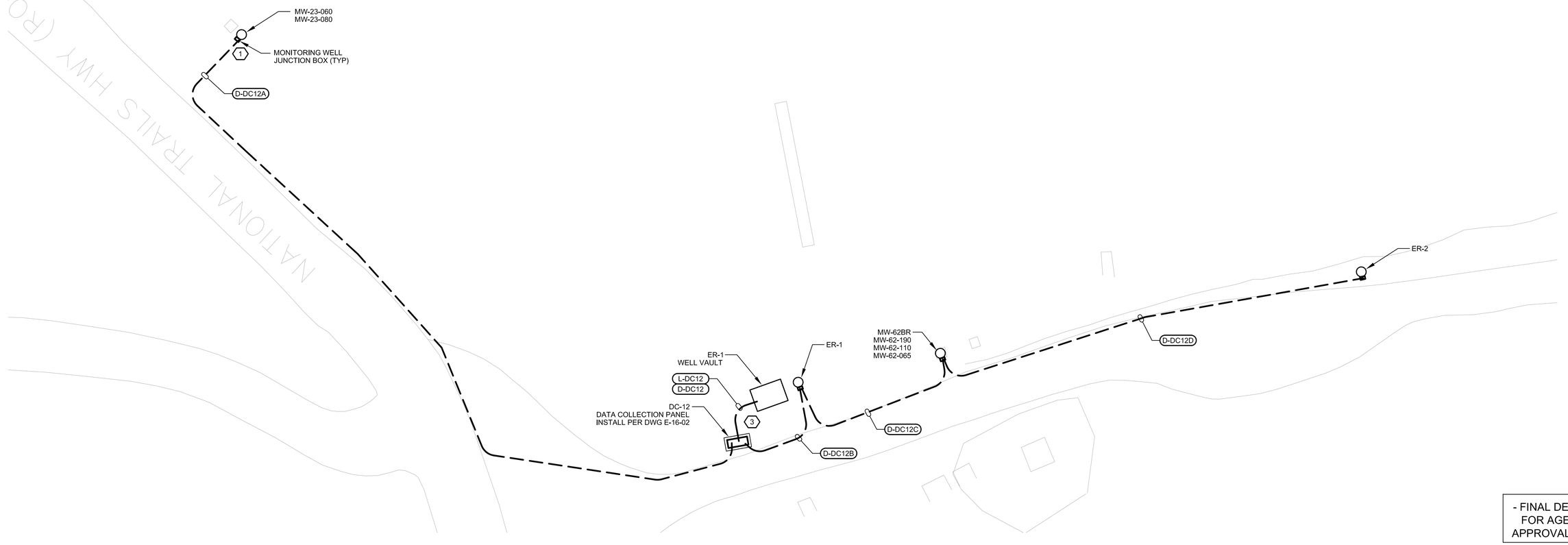

DATA COLLECTION STATION DC-12 (2)(4)

- FINAL DESIGN - FOR AGENCY APPROVAL ONLY

REGISTERED PROFESSIONAL ENGINEER
JOHN M. SIOOTIS
20532
Exp. 9-30-17
ELECTRICAL
STATE OF CALIFORNIA

FRISCH ENGINEERING, INC.
CONSULTING ELECTRICAL ENGINEERS
13405 FOLSOM BLVD, UNIT 600
FOLSOM, CA 95630
PH 916 353 1025
WWW.FRISCHENGINEERING.COM

ARCADIS

NO.	DATE	DESCRIPTION	GM/SPEC	DWN	CHKD	SUPV	APVD BY
1	11/18/15	FINAL DESIGN		MBY	TPF	JMS	RAO
0	9/8/14	PRE-FINAL (90%) DESIGN		MBY			TPF

REVISIONS

APPROVED BY		
RAO	SO	
	SUPV	JMS
	DSGN	MBY
	DWN	MBY
	CHKD	TPF
	OK	JMS
	DATE	
	SCALES	N/A

TOPOCK GROUNDWATER REMEDIATION PROJECT
MONITORING WELL DATA COLLECTION SYSTEM SHEET 11
GAS TRANSMISSION & DISTRIBUTION
PACIFIC GAS AND ELECTRIC COMPANY
SAN FRANCISCO, CALIFORNIA

MICROFILM	
BILL OF MATL	
DWG LIST	
SUPSDS	
SUPSD BY	
SHEET NO. of SHEETS	
E-16-14	REV 0

PLOT DATE: Nov 04, 2015 PLOT TIME: 3:17:30pm
FILENAME: FE-E-XXX-160AD.dwg
N1808

ELECTRICAL PLAN NOTES:

1. SEE ELECTRICAL PLAN NOTES ON DRAWING E-00-02.

NOTES REFERENCED IN DRAWING:

1. INSTALL MONITORING WELL JUNCTION BOX PER DWG E-00-52/DET 6 (TYP).
2. ALL CONDUITS SHOWN ARE REQUIRED TO BE INSTALLED TO ENSURE A COMPLETE SYSTEM. WHERE POSSIBLE COORDINATE CONDUIT ROUTING WITH ELECTRICAL TRENCH SECTIONS SHOWN ON THE CIVIL DRAWINGS AND COMBINE CONDUIT IN COMMON TRENCH.
3. MONITORING WELL LOCATIONS SHOWN ARE APPROXIMATE. ACTUAL MONITORING WELL LOCATIONS ARE DEFINED BY THE CIVIL PLANS AND SPECIFICATIONS.

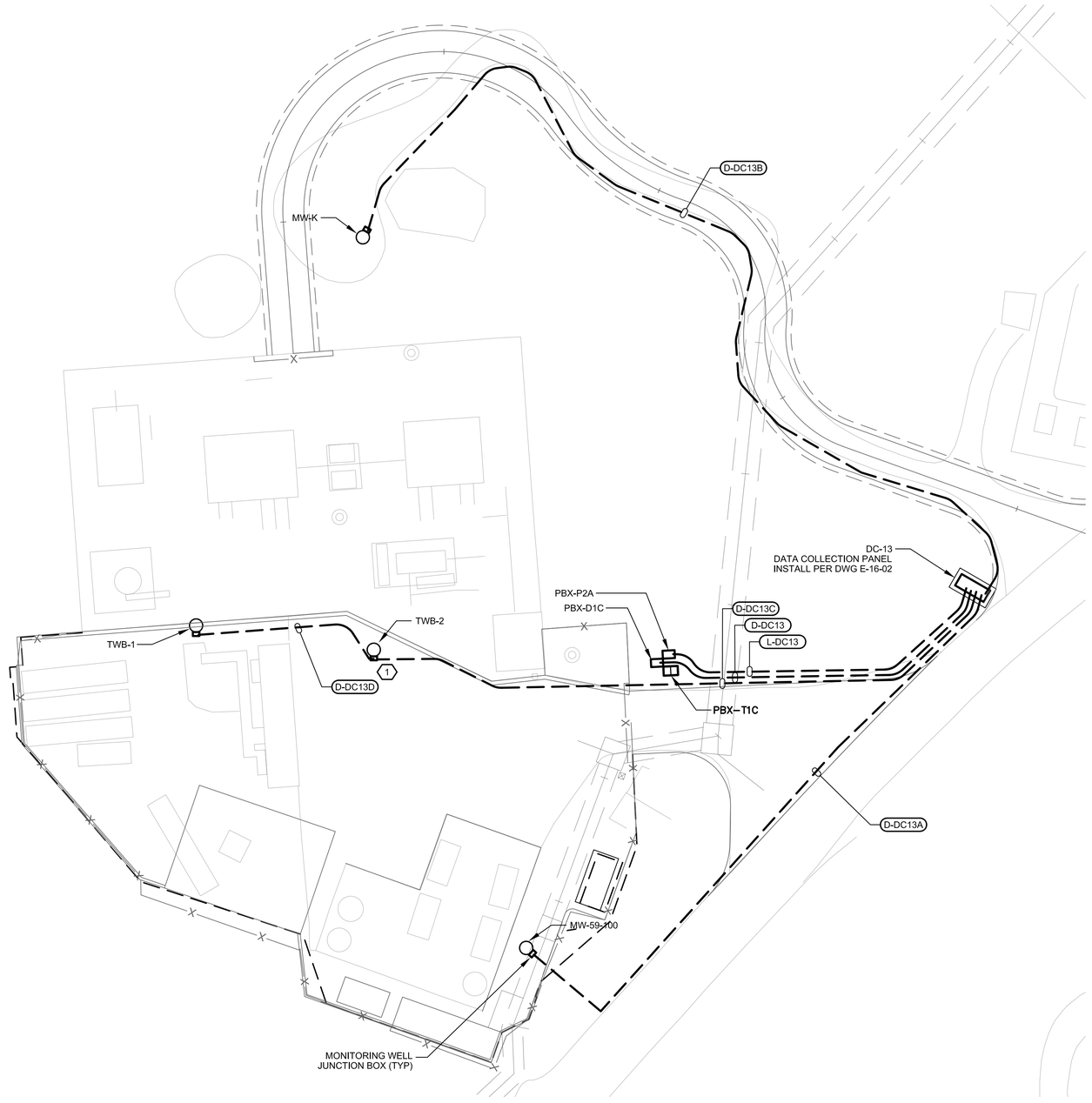

0 25 50 75

SCALE: 1"=25'

N

DATA COLLECTION STATION DC-13 (2)(3)

- FINAL DESIGN - FOR AGENCY APPROVAL ONLY

REGISTERED PROFESSIONAL ENGINEER
JOHN M. SIDDOWAY
20532
Exp. 9-30-17
ELECTRICAL
STATE OF CALIFORNIA

FRISCH ENGINEERING, INC.
CONSULTING ELECTRICAL ENGINEERS
13405 FOLSOM BLVD, UNIT 600
FOLSOM, CA 95630
PH 916 353 1025
WWW.FRISCHENGINEERING.COM

ARCADIS

NO.	DATE	DESCRIPTION	GM/SPEC	DWN	CHKD	SUPV	APVD BY
1	11/18/15	FINAL DESIGN		MBY	TPF	JMS	RAO
0	9/8/14	PRE-FINAL (90%) DESIGN		MBY		TPF	

REVISIONS

APPROVED BY	
RAO	SO
	SUPV JMS
	DSGN MBY
	DWN MBY
	CHKD TPF
	OK JMS
	DATE
	SCALES N/A

TOPOCK GROUNDWATER REMEDIATION PROJECT
MONITORING WELL
DATA COLLECTION SYSTEM
SHEET 12
GAS TRANSMISSION & DISTRIBUTION
PACIFIC GAS AND ELECTRIC COMPANY
SAN FRANCISCO, CALIFORNIA

MICROFILM	
BILL OF MATL	
DWG LIST	
SUPSDS	
SUPSD BY	
SHEET NO.	of SHEETS
E-16-15	REV 0

FILENAME: FE-E-XXX-1615AD.dwg
PLOT DATE: Nov 04, 2015 PLOT TIME: 3:17:22pm

N1808

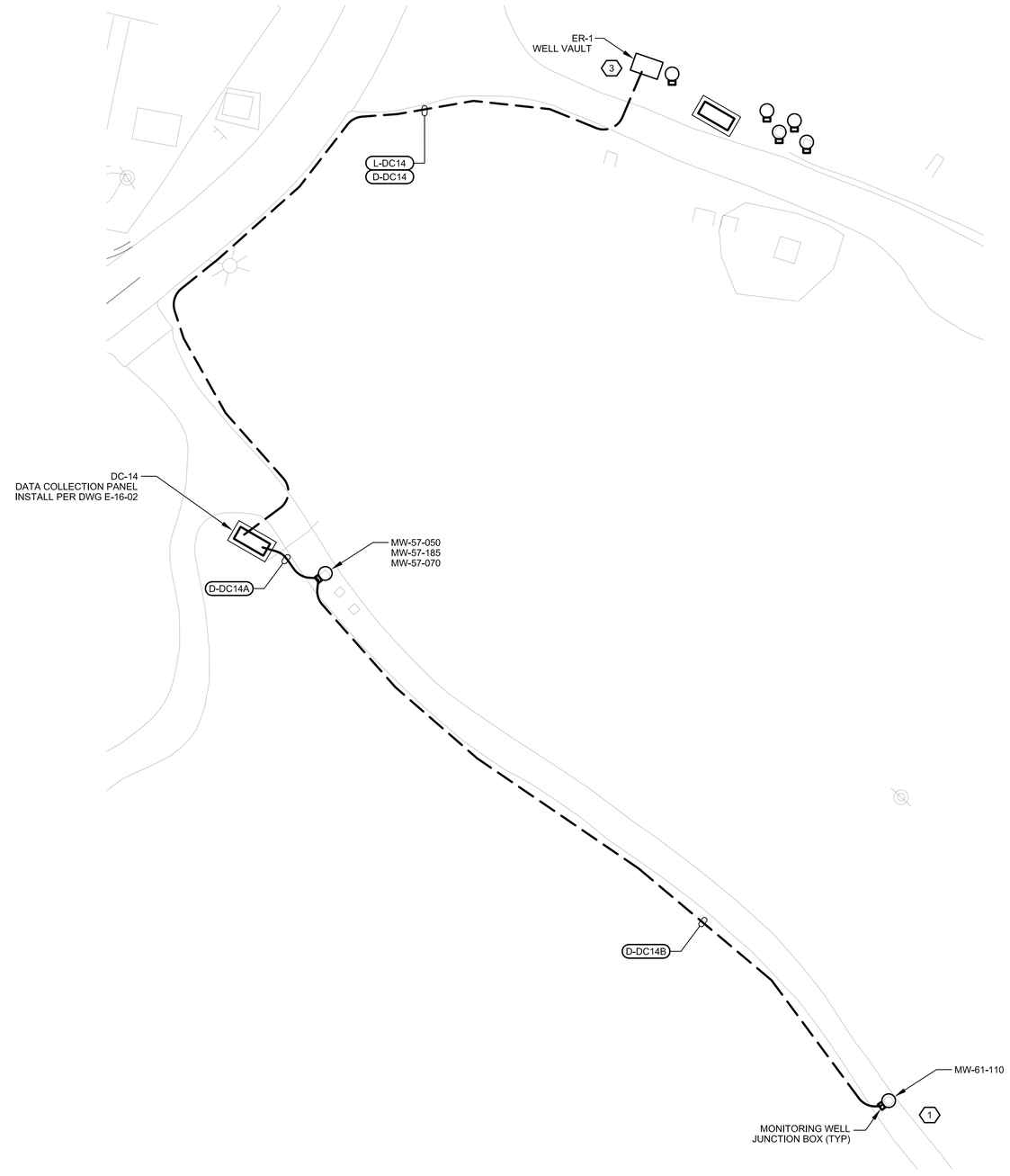

ELECTRICAL PLAN NOTES:

1. SEE ELECTRICAL PLAN NOTES ON DRAWING E-00-02.

NOTES REFERENCED IN DRAWING:

1. INSTALL MONITORING WELL JUNCTION BOX PER DWG E-00-52/DET 6 (TYP).
2. ALL CONDUITS SHOWN ARE REQUIRED TO BE INSTALLED TO ENSURE A COMPLETE SYSTEM. WHERE POSSIBLE COORDINATE CONDUIT ROUTING WITH ELECTRICAL TRENCH SECTIONS SHOWN ON THE CIVIL DRAWINGS AND COMBINE CONDUIT IN COMMON TRENCH.
3. COORDINATE CONDUIT ENTRY IN TO INJECTION AND EXTRACTION WELL VAULTS WITH TCS LOOP, NTH IRZ, INNER LOOP AND MW-20 BENCH ELECTRICAL DRAWINGS.
4. MONITORING WELL LOCATIONS SHOWN ARE APPROXIMATE. ACTUAL MONITORING WELL LOCATIONS ARE DEFINED BY THE CIVIL PLANS AND SPECIFICATIONS.

0 25 50 75
SCALE: 1"=25'

N

DATA COLLECTION STATION DC-14 (2)(4)

- FINAL DESIGN - FOR AGENCY APPROVAL ONLY

REGISTERED PROFESSIONAL ENGINEER
JOHN M. SIDDALL
20532
Exp. 9-30-17
ELECTRICAL
STATE OF CALIFORNIA

FRISCH ENGINEERING, INC.
CONSULTING ELECTRICAL ENGINEERS
13405 FOLSOM BLVD, UNIT 600
FOLSOM, CA 95630
PH 916 353 1025
WWW.FRISCHENGINEERING.COM

ARCADIS

NO.	DATE	DESCRIPTION	GM/SPEC	DWN	CHKD	SUPV	APVD BY
1	11/18/15	FINAL DESIGN	MBY	TPF	JMS	RAO	
0	9/8/14	PRE-FINAL (90%) DESIGN	MBY			TPF	

REVISIONS

APPROVED BY	
RAO	SO
	SUPV JMS
	DSGN MBY
	DWN MBY
	CHKD TPF
	OK JMS
	DATE
	SCALES N/A

TOPOCK GROUNDWATER REMEDIATION PROJECT
MONITORING WELL
DATA COLLECTION SYSTEM
SHEET 13
GAS TRANSMISSION & DISTRIBUTION
PACIFIC GAS AND ELECTRIC COMPANY
SAN FRANCISCO, CALIFORNIA

MICROFILM	
BILL OF MATL	
DWG LIST	
SUPSDS	
SUPSD BY	
SHEET NO.	of SHEETS
E-16-16	REV 0

PLOT DATE: Nov 04, 2015 PLOT TIME: 3:17:16pm
FILENAME: FE-E-XXX-1615AD.dwg

ELECTRICAL PLAN NOTES:

1. SEE ELECTRICAL PLAN NOTES ON DRAWING E-00-02.

NOTES REFERENCED IN DRAWING:

1. INSTALL MONITORING WELL JUNCTION BOX PER DWG E-00-52/DET 6 (TYP).
2. ALL CONDUITS SHOWN ARE REQUIRED TO BE INSTALLED TO ENSURE A COMPLETE SYSTEM. WHERE POSSIBLE COORDINATE CONDUIT ROUTING WITH ELECTRICAL TRENCH SECTIONS SHOWN ON THE CIVIL DRAWINGS AND COMBINE CONDUIT IN COMMON TRENCH.
3. COORDINATE CONDUIT ENTRY IN TO INJECTION AND EXTRACTION WELL VAULTS WITH TCS LOOP, NTH IRZ, INNER LOOP AND MW-20 BENCH ELECTRICAL DRAWINGS.
4. MONITORING WELL LOCATIONS SHOWN ARE APPROXIMATE. ACTUAL MONITORING WELL LOCATIONS ARE DEFINED BY THE CIVIL PLANS AND SPECIFICATIONS.

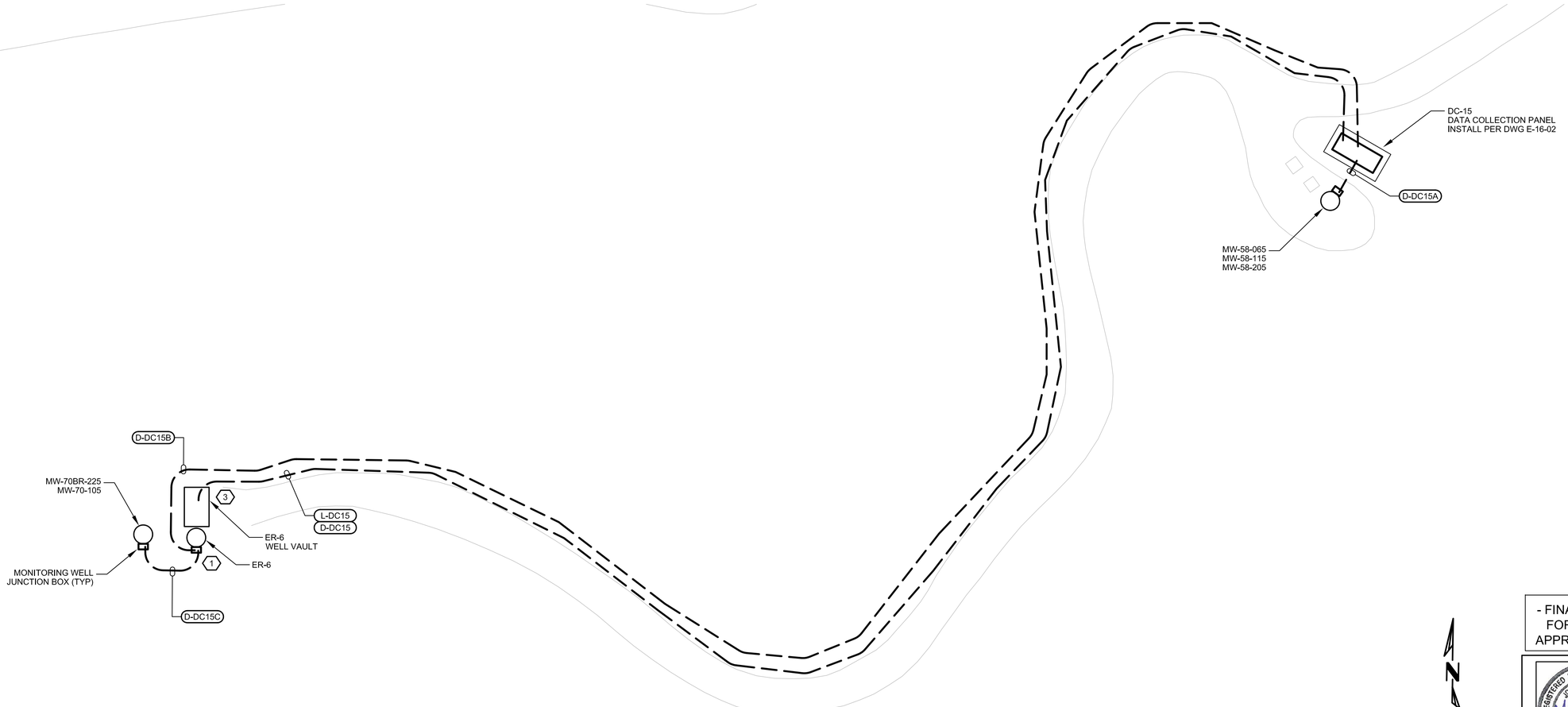

DATA COLLECTION STATION DC-15 (2)(4)

- FINAL DESIGN - FOR AGENCY APPROVAL ONLY

REGISTERED PROFESSIONAL ENGINEER
JOHN M. SIOUTAS
20532
Exp. 9-30-17
ELECTRICAL
STATE OF CALIFORNIA

FRISCH ENGINEERING, INC.
CONSULTING ELECTRICAL ENGINEERS
13405 FOLSOM BLVD, UNIT 600
FOLSOM, CA 95630
PH 916 353 1025
WWW.FRISCHENGINEERING.CO

ARCADIS

NO.	DATE	DESCRIPTION	GM/SPEC	DWN	CHKD	SUPV	APVD BY
1	11/18/15	FINAL DESIGN		MBY	TPF	JMS	RAO
0	9/8/14	PRE-FINAL (90%) DESIGN		MBY		TPF	

REVISIONS

APPROVED BY: RAO

SO	
SUPV	JMS
DSGN	MBY
DWN	MBY
CHKD	TPF
OK	JMS
DATE	
SCALES	N/A

TOPOCK GROUNDWATER REMEDIATION PROJECT
MONITORING WELL
DATA COLLECTION SYSTEM
SHEET 14
GAS TRANSMISSION & DISTRIBUTION
PACIFIC GAS AND ELECTRIC COMPANY
SAN FRANCISCO, CALIFORNIA

MICROFILM	
BILL OF MATL	
DWG LIST	
SUPSDS	
SUPSD BY	
SHEET NO. of SHEETS	
E-16-17	REV 0

PLOT DATE: Nov 04, 2015 PLOT TIME: 3:17:09pm
FILENAME: FE-E-XXX-1615AD.dwg

N1808

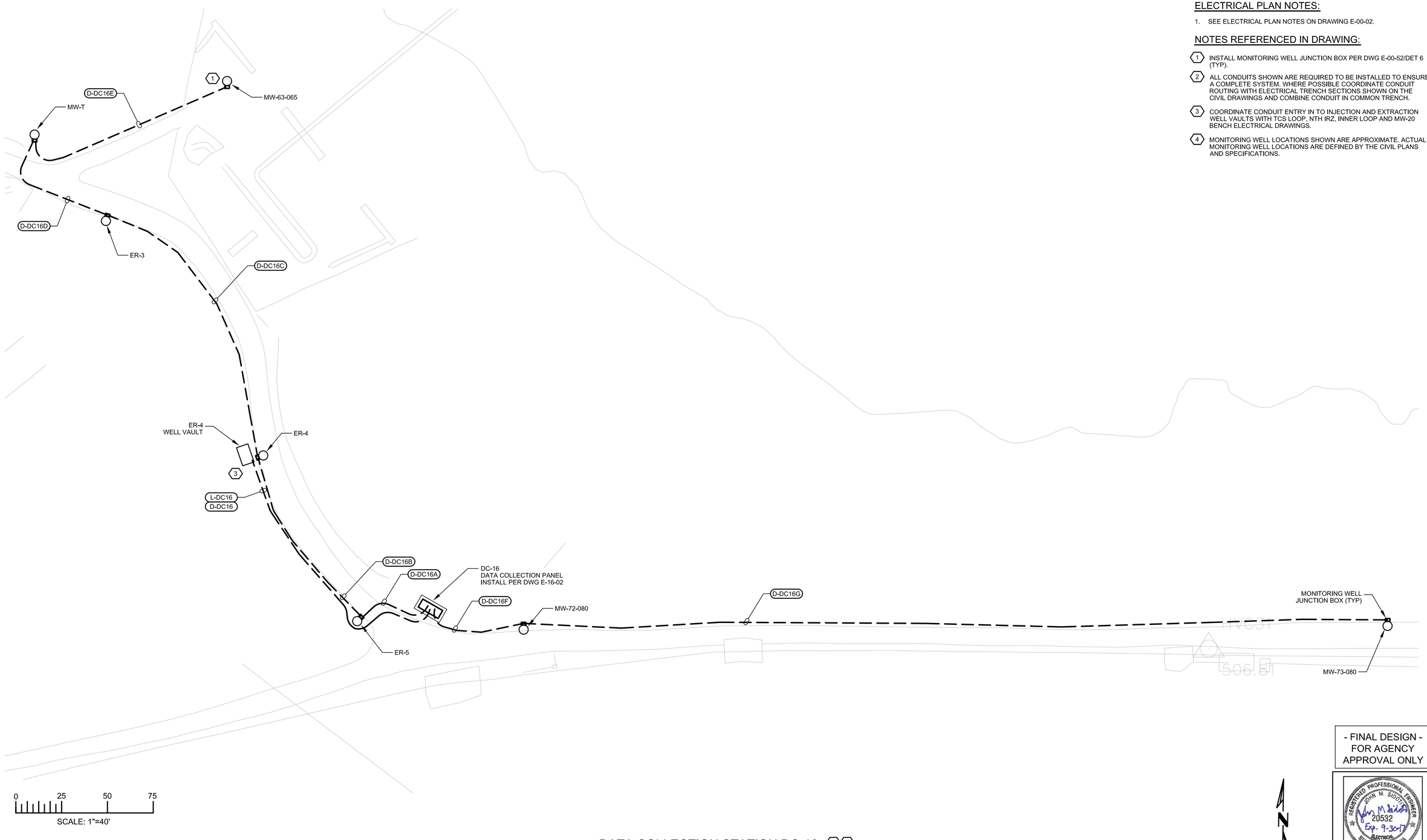

ELECTRICAL PLAN NOTES:

1. SEE ELECTRICAL PLAN NOTES ON DRAWING E-00-02.

NOTES REFERENCED IN DRAWING:

1. INSTALL MONITORING WELL JUNCTION BOX PER DWG E-00-52/DET 6 (TYP).
2. ALL CONDUITS SHOWN ARE REQUIRED TO BE INSTALLED TO ENSURE A COMPLETE SYSTEM. WHERE POSSIBLE COORDINATE CONDUIT ROUTING WITH ELECTRICAL TRENCH SECTIONS SHOWN ON THE CIVIL DRAWINGS AND COMBINE CONDUIT IN COMMON TRENCH.
3. COORDINATE CONDUIT ENTRY IN TO INJECTION AND EXTRACTION WELL VAULTS WITH TCS LOOP, NTH IRZ, INNER LOOP AND MW-20 BENCH ELECTRICAL DRAWINGS.
4. MONITORING WELL LOCATIONS SHOWN ARE APPROXIMATE. ACTUAL MONITORING WELL LOCATIONS ARE DEFINED BY THE CIVIL PLANS AND SPECIFICATIONS.

DATA COLLECTION STATION DC-16 (2)(4)

- FINAL DESIGN -
FOR AGENCY APPROVAL ONLY

REGISTERED PROFESSIONAL ENGINEER
JOHN M. SIOOTIS
20532
Exp. 9-30-17
ELECTRICAL
STATE OF CALIFORNIA

FRISCH ENGINEERING, INC.
CONSULTING ELECTRICAL ENGINEERS
13405 FOLSOM BLVD, UNIT 600
FOLSOM, CA 95630
PH 916 353 1025
WWW.FRISCHENGINEERING.COM

ARCADIS

NO.	DATE	DESCRIPTION	GM/SPEC	DWN	CHKD	SUPV	APVD BY
1	11/18/15	FINAL DESIGN		MBY	TPF	JMS	RAO
0	9/8/14	PRE-FINAL (90%) DESIGN		MBY			TPF

REVISIONS

APPROVED BY	RAO
SO	
SUPV	JMS
DSGN	MBY
DWN	MBY
CHKD	TPF
OK	JMS
DATE	
SCALES	N/A

TOPOCK GROUNDWATER REMEDIATION PROJECT
MONITORING WELL
DATA COLLECTION SYSTEM
SHEET 15
GAS TRANSMISSION & DISTRIBUTION
PACIFIC GAS AND ELECTRIC COMPANY
SAN FRANCISCO, CALIFORNIA

MICROFILM	
BILL OF MATL	
DWG LIST	
SUPSDS	
SUPSD BY	
SHEET NO.	of SHEETS
E-16-18	REV 0

PLOT DATE: Nov 04, 2015 PLOT TIME: 3:17:02pm
FILENAME: FE-E-XXX-1615AD.dwg

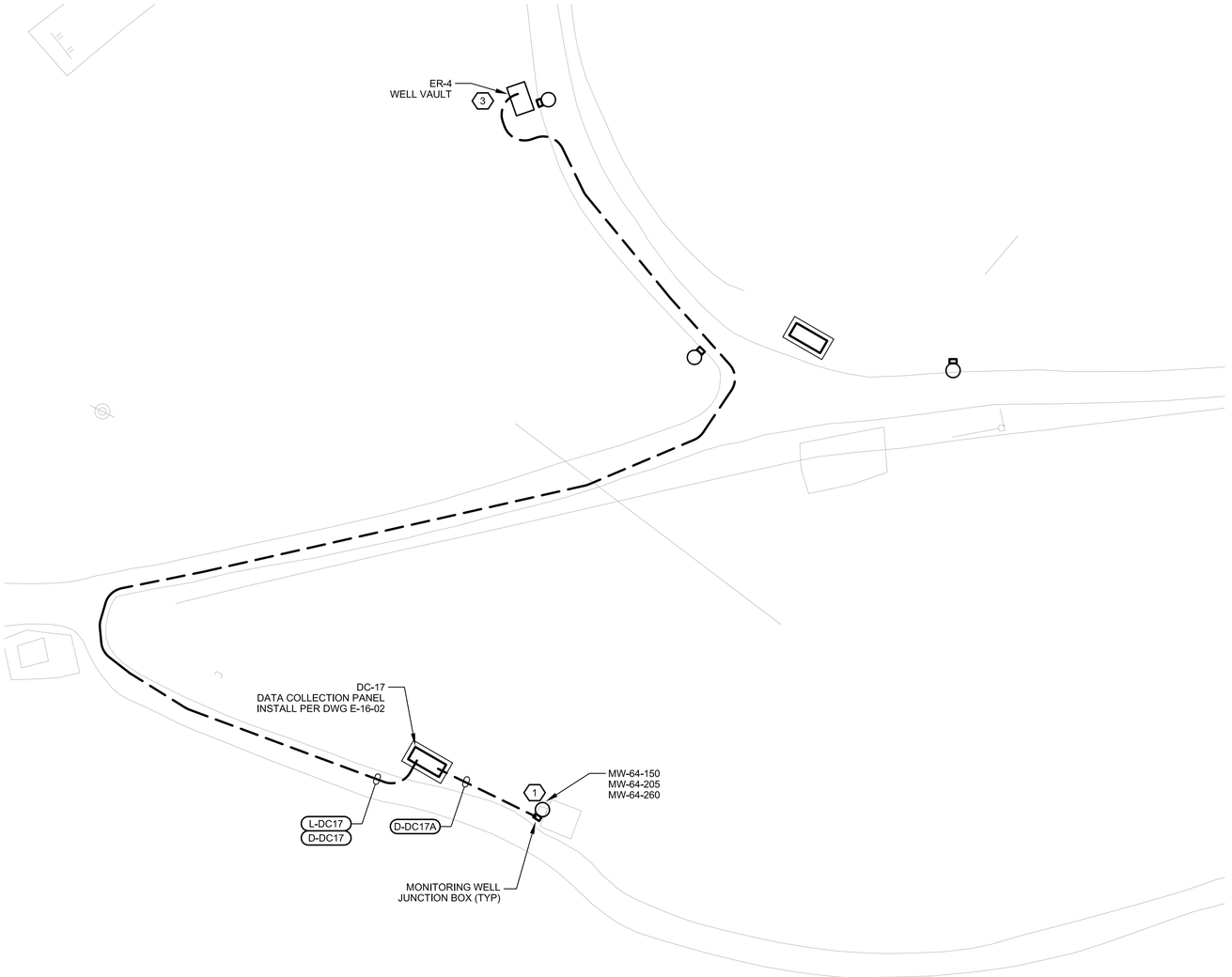

ELECTRICAL PLAN NOTES:

1. SEE ELECTRICAL PLAN NOTES ON DRAWING E-00-02.

NOTES REFERENCED IN DRAWING:

1. INSTALL MONITORING WELL JUNCTION BOX PER DWG E-00-52/DET 6 (TYP).
2. ALL CONDUITS SHOWN ARE REQUIRED TO BE INSTALLED TO ENSURE A COMPLETE SYSTEM. WHERE POSSIBLE COORDINATE CONDUIT ROUTING WITH ELECTRICAL TRENCH SECTIONS SHOWN ON THE CIVIL DRAWINGS AND COMBINE CONDUIT IN COMMON TRENCH.
3. COORDINATE CONDUIT ENTRY IN TO INJECTION AND EXTRACTION WELL VAULTS WITH TCS LOOP, NTH IRZ, INNER LOOP AND MW-20 BENCH ELECTRICAL DRAWINGS.
4. MONITORING WELL LOCATIONS SHOWN ARE APPROXIMATE. ACTUAL MONITORING WELL LOCATIONS ARE DEFINED BY THE CIVIL PLANS AND SPECIFICATIONS.

0 25 50 75
SCALE: 1"=25'

DATA COLLECTION STATION DC-17 (2)(4)

- FINAL DESIGN -
FOR AGENCY
APPROVAL ONLY

REGISTERED PROFESSIONAL ENGINEER
JOHN M. SIDOTI
20532
Exp. 9-30-17
ELECTRICAL
STATE OF CALIFORNIA

FRISCH ENGINEERING, INC.
CONSULTING ELECTRICAL ENGINEERS
13405 FOLSOM BLVD, UNIT 600
FOLSOM, CA 95630
PH 916 353 1025
WWW.FRISCHENGINEERING.COM

ARCADIS

NO.	DATE	DESCRIPTION	GM/SPEC	DWN	CHKD	SUPV	APVD BY
1	11/18/15	FINAL DESIGN		MBY	TPF	JMS	RAO
0	9/8/14	PRE-FINAL (90%) DESIGN		MBY		TPF	

REVISIONS

APPROVED BY	RAO
SO	
SUPV	JMS
DSGN	MBY
DWN	MBY
CHKD	TPF
OK	JMS
DATE	
SCALES	N/A

TOPOCK GROUNDWATER REMEDIATION PROJECT
MONITORING WELL
DATA COLLECTION SYSTEM
SHEET 16
GAS TRANSMISSION & DISTRIBUTION
PACIFIC GAS AND ELECTRIC COMPANY
SAN FRANCISCO, CALIFORNIA

MICROFILM	
BILL OF MATL	
DWG LIST	
SUPSDS	
SUPSD BY	
SHEET NO.	of SHEETS
E-16-19	REV 0

PLOT DATE: Nov 04, 2015 PLOT TIME: 3:16:55pm
FILENAME: FE-E-XXX-1615AD.dwg

N1808

ELECTRICAL PLAN NOTES:

1. SEE ELECTRICAL PLAN NOTES ON DRAWING E-00-02.

NOTES REFERENCED IN DRAWING:

1. INSTALL MONITORING WELL JUNCTION BOX PER DWG E-00-52/DET 6 (TYP).
2. ALL CONDUITS SHOWN ARE REQUIRED TO BE INSTALLED TO ENSURE A COMPLETE SYSTEM. WHERE POSSIBLE COORDINATE CONDUIT ROUTING WITH ELECTRICAL TRENCH SECTIONS SHOWN ON THE CIVIL DRAWINGS AND COMBINE CONDUIT IN COMMON TRENCH.
3. MONITORING WELL LOCATIONS SHOWN ARE APPROXIMATE. ACTUAL MONITORING WELL LOCATIONS ARE DEFINED BY THE CIVIL PLANS AND SPECIFICATIONS.



DATA COLLECTION STATION DC-18 (2)(3)

- FINAL DESIGN - FOR AGENCY APPROVAL ONLY

REGISTERED PROFESSIONAL ENGINEER
JOHN M. SIOOTIS
20532
Exp. 9-30-17
ELECTRICAL
STATE OF CALIFORNIA

FRISCH ENGINEERING, INC.
CONSULTING ELECTRICAL ENGINEERS
13405 FOLSOM BLVD, UNIT 600
FOLSOM, CA 95630
PH 916 353 1025
WWW.FRISCHENGINEERING.COM

ARCADIS

NO.	DATE	DESCRIPTION	GM/SPEC	DWN	CHKD	SUPV	APVD BY
1	11/18/15	FINAL DESIGN	MBY	TPF	JMS	RAO	
0	9/8/14	PRE-FINAL (90%) DESIGN	MBY			TPF	

REVISIONS

APPROVED BY	
RAO	SO
	SUPV JMS
	DSGN MBY
	DWN MBY
	CHKD TPF
	OK JMS
	DATE
	SCALES N/A

TOPOCK GROUNDWATER REMEDIATION PROJECT
MONITORING WELL DATA COLLECTION SYSTEM
SHEET 17
GAS TRANSMISSION & DISTRIBUTION
PACIFIC GAS AND ELECTRIC COMPANY
SAN FRANCISCO, CALIFORNIA

MICROFILM	
BILL OF MATL	
DWG LIST	
SUPSDS	
SUPSD BY	
SHEET NO. of SHEETS	
E-16-20	REV 0

PLOT DATE: Nov 04, 2015 PLOT TIME: 3:16:48pm
FILENAME: FE-E-XXX-1615AD.dwg
N1808



ELECTRICAL PLAN NOTES:

1. SEE ELECTRICAL PLAN NOTES ON DRAWING E-00-02.

NOTES REFERENCED IN DRAWING:

1. INSTALL MONITORING WELL JUNCTION BOX PER DWG E-00-52/DET 6 (TYP).
2. ALL CONDUITS SHOWN ARE REQUIRED TO BE INSTALLED TO ENSURE A COMPLETE SYSTEM. WHERE POSSIBLE COORDINATE CONDUIT ROUTING WITH ELECTRICAL TRENCH SECTIONS SHOWN ON THE CIVIL DRAWINGS AND COMBINE CONDUIT IN COMMON TRENCH.
3. MONITORING WELL LOCATIONS SHOWN ARE APPROXIMATE. ACTUAL MONITORING WELL LOCATIONS ARE DEFINED BY THE CIVIL PLANS AND SPECIFICATIONS.

- FINAL DESIGN -
FOR AGENCY APPROVAL ONLY

REGISTERED PROFESSIONAL ENGINEER
JOHN M. SIOOTIS
20532
Exp. 9-30-17
ELECTRICAL
STATE OF CALIFORNIA

FRISCH ENGINEERING, INC.
CONSULTING ELECTRICAL ENGINEERS
13405 FOLSOM BLVD, UNIT 600
FOLSOM, CA 95630
PH 916 353 1025
WWW.FRISCHENGINEERING.COM

ARCADIS

NO.	DATE	DESCRIPTION	GM/SPEC	DWN	CHKD	SUPV	APVD BY
1	11/18/15	FINAL DESIGN		MBY	TPF	JMS	RAO
0	9/8/14	PRE-FINAL (90%) DESIGN		MBY			TPF

REVISIONS

APPROVED BY	
RAO	SO
	SUPV JMS
	DSGN MBY
	DWN MBY
	CHKD TPF
	OK JMS
	DATE
	SCALES N/A

TOPOCK GROUNDWATER REMEDIATION PROJECT
MONITORING WELL DATA COLLECTION SYSTEM SHEET 18
GAS TRANSMISSION & DISTRIBUTION
PACIFIC GAS AND ELECTRIC COMPANY
SAN FRANCISCO, CALIFORNIA

MICROFILM	
BILL OF MATL	
DWG LIST	
SUPSDS	
SUPSD BY	
SHEET NO.	of SHEETS
E-16-21	REV 0

PLOT DATE: Nov 04, 2015 PLOT TIME: 3:16:38pm
FILENAME: FE-E-XXX-1615AD.dwg
N1808

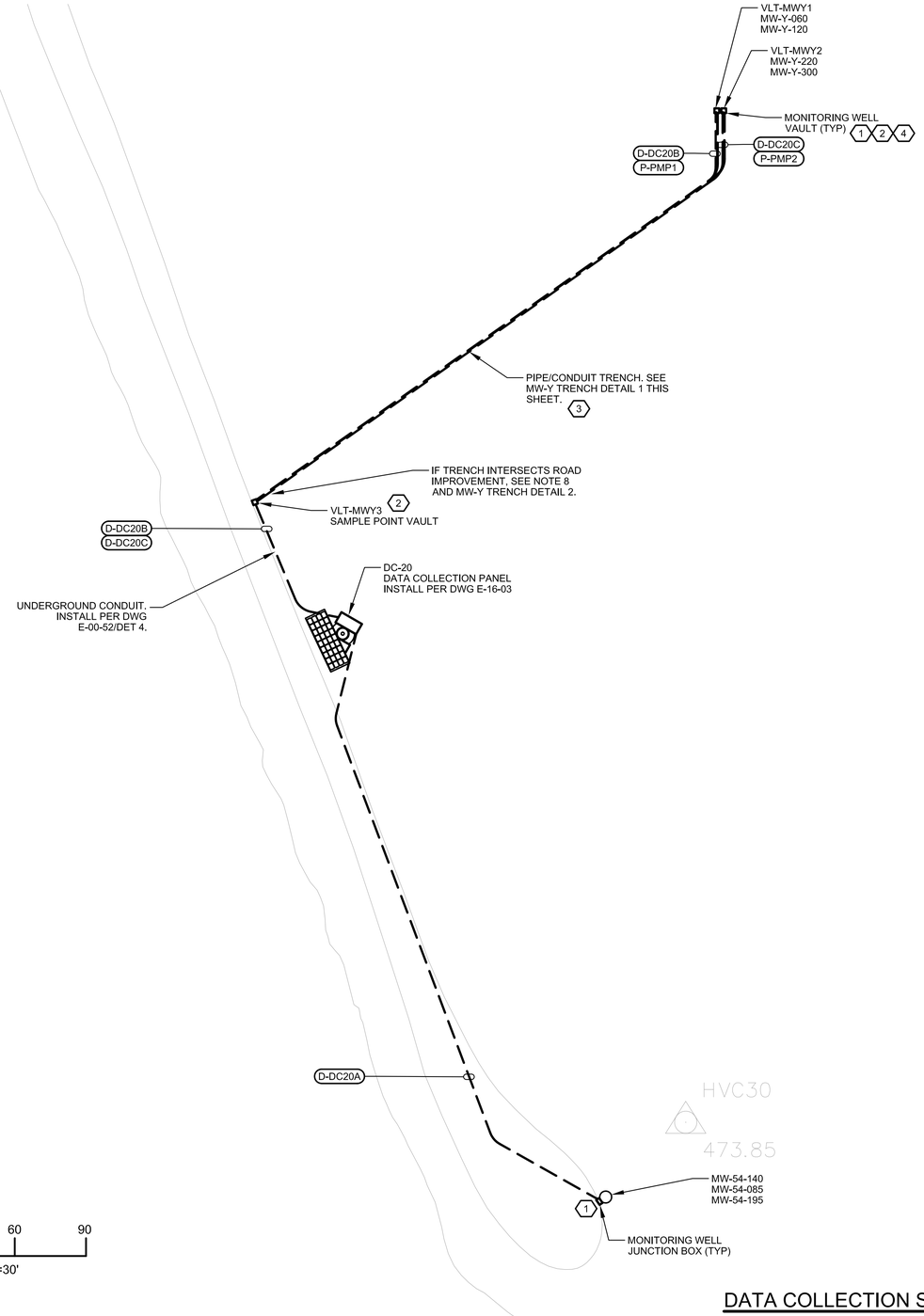

DATA COLLECTION STATION DC-20 5 6

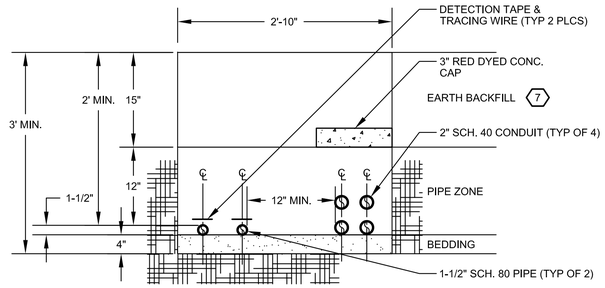

MW-Y TRENCH DETAIL 1

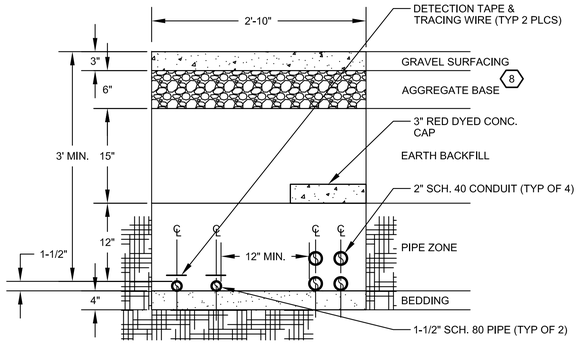

MW-Y TRENCH DETAIL 2

ELECTRICAL PLAN NOTES:

1. SEE ELECTRICAL PLAN NOTES ON DRAWING E-00-02.

NOTES REFERENCED IN DRAWING:

1. WALLMOUNT 10"X8"X4" NEMA 3R LOCKABLE TYPE JUNCTION BOX IN VAULT. PROVIDE HOFFMAN A-1008CHS OR EQUAL WITH EXTERNAL PADLOCK ATTACHMENT.
2. INSTALL 3 EMCO WHEATON VAULTS A0717-724VWL OR APPROVED EQUAL. TWO VAULTS LOCATED AT WELL SITE WITH ONE FOR EACH BOREHOLE (VLT-MWY1 AND -MWY2) AND ONE SAMPLE POINT VAULT (VLT-MWY3) LOCATED WITHIN 5 FEET OF ROAD EDGE. PROVIDE (1) 1-1/2 INCH SCH 80 PVC PIPE AND (1) 1 INCH SCH 40 PVC CONDUIT PENETRATIONS ON EACH WELL VAULT WITH MINIMUM DEPTH OF 12". SAMPLE POINT VAULT WILL HAVE 4 PENETRATIONS. VAULT PENETRATIONS WILL BE ACCOMPLISHED WITH SCH. 40 STEEL PIPE SLEEVE PASSING THROUGH WALL AND SEAL WELD AROUND PIPE ON BOTH SIDES. SLEEVES SHALL BE 2-1/2 INCH FOR PIPE AND 2 INCH FOR CONDUIT. INSTALL PIPE WALL PENETRATION SEAL (METRAFLEX OR EQUAL).
3. ROUTE PIPE AND CONDUIT BETWEEN VAULTS WITH MINIMUM BURIAL DEPTH OF 18". PIPE WILL BE USED TO CONTAIN 2 - ¼" DIA. ID (X 3/8" OD) PTFE FLEXIBLE TUBING (ALTAFLUOR 100 OR EQUAL). PROVIDE 15' EXTRA TUBING COILED INSIDE SAMPLE POINT VAULT (VLT-MWY3) WITH BARBED PVC CONNECTORS. INSTALL 2 POWER CABLES SUPPLIED WITH PUMP INSIDE EACH CONDUIT.
4. FURNISH (4) SS MEGA-MONSOON PUMPS (PROACTIVE ENVIRONMENTAL PRODUCTS). PROVIDE SUFFICIENT CABLE TO OPERATE PUMPS AT SPECIFIED DEPTHS. ROUTE PUMP CABLE THROUGH CONDUIT FROM VLT-MWY3 TO VLT-MWY1 AND VLT-MWY2. FURNISH MANUFACTURERS STANDARD CABLE CONNECTIONS FOR CONTROLLER AND SPRING STYLE BATTERY CLIPS CONNECTIONS TO 12 VOLT BATTERY.
5. ALL CONDUITS SHOWN ARE REQUIRED TO BE INSTALLED TO ENSURE A COMPLETE SYSTEM. WHERE POSSIBLE COORDINATE CONDUIT ROUTING WITH ELECTRICAL TRENCH SECTIONS SHOWN ON THE CIVIL DRAWINGS AND COMBINE CONDUIT IN COMMON TRENCH.
6. MONITORING WELL LOCATIONS SHOWN ARE APPROXIMATE. ACTUAL MONITORING WELL LOCATIONS ARE DEFINED BY THE CIVIL PLANS AND SPECIFICATIONS.
7. TRENCH BACKFILL COMPLETION TO BE 12" MINIMUM THICKNESS. PLACE NATIVE MATERIAL AND MATCH TO EXISTING GRADE. TRENCH CUT SLOPE TO BE DETERMINED BY CONTRACTOR PER OSHA GUIDELINES. WATER PIPES TO BE PLACED ON COMPACTED BED OF GRANULAR FILL 4" MINIMUM THICKNESS.
8. TRENCH BACKFILL COMPLETION TO BE 12" MINIMUM THICKNESS. IF WITHIN ROAD IMPROVEMENT, PLACE COMPACTED GRAVEL BASE AND MATCH TO FINISHED GRADE, OTHERWISE PLACE NATIVE MATERIAL AND MATCH TO EXISTING GRADE. TRENCH CUT SLOPE TO BE DETERMINED BY CONTRACTOR PER OSHA GUIDELINES. WATER PIPES TO BE PLACED ON COMPACTED BED OF GRANULAR FILL 4" MINIMUM THICKNESS.

- FINAL DESIGN - FOR AGENCY APPROVAL ONLY

REGISTERED PROFESSIONAL ENGINEER
JOHN M. SIGOTA
20532
Exp. 9-30-17
ELECTRICAL
STATE OF CALIFORNIA

FRISCH ENGINEERING, INC.
CONSULTING ELECTRICAL ENGINEERS
13405 FOLSOM BLVD, UNIT 600
FOLSOM, CA 95630
PH 916 353 1025
WWW.FRISCHENGINEERING.COM

ARCADIS

NO.	DATE	DESCRIPTION	GM/SPEC	DWN	CHKD	SUPV	APVD BY
2	11/18/15	FINAL DESIGN		MBY	TPF	JMS	RAO
1	12/30/14	SUPPLEMENTAL PRE-FINAL (90%) DESIGN		MBY			TPF
0	9/8/14	PRE-FINAL (90%) DESIGN		MBY			TPF

REVISIONS

APPROVED BY	
RAO	

SO	
SUPV	JMS
DSGN	MBY
DWN	MBY
CHKD	TPF
OK	JMS
DATE	
SCALES	N/A

TOPOCK GROUNDWATER REMEDIATION PROJECT
MONITORING WELL
DATA COLLECTION SYSTEM
SHEET 19
GAS TRANSMISSION & DISTRIBUTION
PACIFIC GAS AND ELECTRIC COMPANY
SAN FRANCISCO, CALIFORNIA

MICROFILM	
BILL OF MATL	
DWG LIST	
SUPSDS	
SUPSD BY	
SHEET NO. of SHEETS	
E-16-22	REV 0

PLOT DATE: Nov 04, 2015 PLOT TIME: 3:16:27pm
FILENAME: FE-EXXX-1615AD.dwg

N1808

ELECTRICAL PLAN NOTES:

1. SEE ELECTRICAL PLAN NOTES ON DRAWING E-00-02.

NOTES REFERENCED IN DRAWING:

1. INSTALL MONITORING WELL JUNCTION BOX PER DWG E-00-52/DET 6 (TYP).
2. ALL CONDUITS SHOWN ARE REQUIRED TO BE INSTALLED TO ENSURE A COMPLETE SYSTEM. WHERE POSSIBLE COORDINATE CONDUIT ROUTING WITH ELECTRICAL TRENCH SECTIONS SHOWN ON THE CIVIL DRAWINGS AND COMBINE CONDUIT IN COMMON TRENCH.
3. MONITORING WELL LOCATIONS SHOWN ARE APPROXIMATE. ACTUAL MONITORING WELL LOCATIONS ARE DEFINED BY THE CIVIL PLANS AND SPECIFICATIONS.

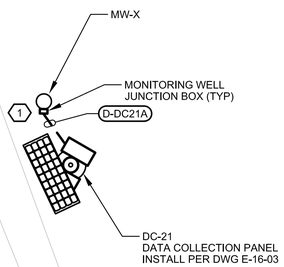

0 25 50 75

SCALE: 1"=25'

DATA COLLECTION STATION DC-21 (2)(3)

N

- FINAL DESIGN - FOR AGENCY APPROVAL ONLY

REGISTERED PROFESSIONAL ENGINEER
JOHN M. SIDOTI
20532
Exp. 9-30-17
ELECTRICAL
STATE OF CALIFORNIA

FRISCH ENGINEERING, INC.
CONSULTING ELECTRICAL ENGINEERS
13405 FOLSOM BLVD, UNIT 600
FOLSOM, CA 95630
PH 916 353 1025
WWW.FRISCHENGINEERING.COM

ARCADIS

NO.	DATE	DESCRIPTION	GM/SPEC	DWN	CHKD	SUPV	APVD BY
2	11/18/15	FINAL DESIGN		MBY	TPF	JMS	RAO
1	12/30/14	SUPPLEMENTAL PRE-FINAL (90%) DESIGN		MBY			TPF
0	9/8/14	PRE-FINAL (90%) DESIGN		MBY			TPF

REVISIONS

APPROVED BY	
RAO	

SO	
SUPV	JMS
DSGN	MBY
DWN	MBY
CHKD	TPF
OK	JMS
DATE	
SCALES	N/A

TOPOCK GROUNDWATER REMEDIATION PROJECT
MONITORING WELL
DATA COLLECTION SYSTEM
SHEET 20
GAS TRANSMISSION & DISTRIBUTION
PACIFIC GAS AND ELECTRIC COMPANY
SAN FRANCISCO, CALIFORNIA

MICROFILM	
BILL OF MATL	
DWG LIST	
SUPSDS	
SUPSD BY	
SHEET NO. of SHEETS	
E-16-23	REV 0

PLOT DATE: Nov 04, 2015 PLOT TIME: 3:16:17pm

FILENAME: FE-E-XXX-1615AD.dwg

N180B



ELECTRICAL PLAN NOTES:

1. SEE ELECTRICAL PLAN NOTES ON DRAWING E-00-02.

NOTES REFERENCED IN DRAWING:

1. INSTALL MONITORING WELL JUNCTION BOX PER DWG E-00-52/DET 6 (TYP).
2. ALL CONDUITS SHOWN ARE REQUIRED TO BE INSTALLED TO ENSURE A COMPLETE SYSTEM. WHERE POSSIBLE COORDINATE CONDUIT ROUTING WITH ELECTRICAL TRENCH SECTIONS SHOWN ON THE CIVIL DRAWINGS AND COMBINE CONDUIT IN COMMON TRENCH.
3. MONITORING WELL LOCATIONS SHOWN ARE APPROXIMATE. ACTUAL MONITORING WELL LOCATIONS ARE DEFINED BY THE CIVIL PLANS AND SPECIFICATIONS.

DATA COLLECTION STATION DC-22 (2)(3)

N

- FINAL DESIGN -
FOR AGENCY
APPROVAL ONLY

REGISTERED PROFESSIONAL ENGINEER
JOHN M. SIDDAY
20532
Exp. 9-30-17
ELECTRICAL
STATE OF CALIFORNIA

FRISCH ENGINEERING, INC.
CONSULTING ELECTRICAL ENGINEERS
13405 FOLSOM BLVD, UNIT 600
FOLSOM, CA 95630
PH 916 353 1025
WWW.FRISCHENGINEERING.COM

ARCADIS

NO.	DATE	DESCRIPTION	GM/SPEC	DWN	CHKD	SUPV	APVD BY
1	11/18/15	FINAL DESIGN		MBY	TPF	JMS	RAO
0	9/8/14	PRE-FINAL (90%) DESIGN		MBY			TPF

REVISIONS

APPROVED BY	
RAO	SO
	SUPV JMS
	DSGN MBY
	DWN MBY
	CHKD TPF
	OK JMS
	DATE
	SCALES N/A

TOPOCK GROUNDWATER REMEDIATION PROJECT
MONITORING WELL
DATA COLLECTION SYSTEM
SHEET 21
GAS TRANSMISSION & DISTRIBUTION
PACIFIC GAS AND ELECTRIC COMPANY
SAN FRANCISCO, CALIFORNIA

MICROFILM	
BILL OF MATL	
DWG LIST	
SUPSDS	
SUPSD BY	
SHEET NO.	of SHEETS
E-16-24	REV 0

PLOT DATE: Nov 04, 2015 PLOT TIME: 3:16:04pm
FILENAME: FE-E-XXX-1615AD.dwg

N1808

ELECTRICAL PLAN NOTES:

1. SEE ELECTRICAL PLAN NOTES ON DRAWING E-00-02.

NOTES REFERENCED IN DRAWING:

1. INSTALL MONITORING WELL JUNCTION BOX PER DWG E-00-52/DET 6 (TYP).
2. ALL CONDUITS SHOWN ARE REQUIRED TO BE INSTALLED TO ENSURE A COMPLETE SYSTEM. WHERE POSSIBLE COORDINATE CONDUIT ROUTING WITH ELECTRICAL TRENCH SECTIONS SHOWN ON THE CIVIL DRAWINGS AND COMBINE CONDUIT IN COMMON TRENCH.
3. MONITORING WELL LOCATIONS SHOWN ARE APPROXIMATE. ACTUAL MONITORING WELL LOCATIONS ARE DEFINED BY THE CIVIL PLANS AND SPECIFICATIONS.

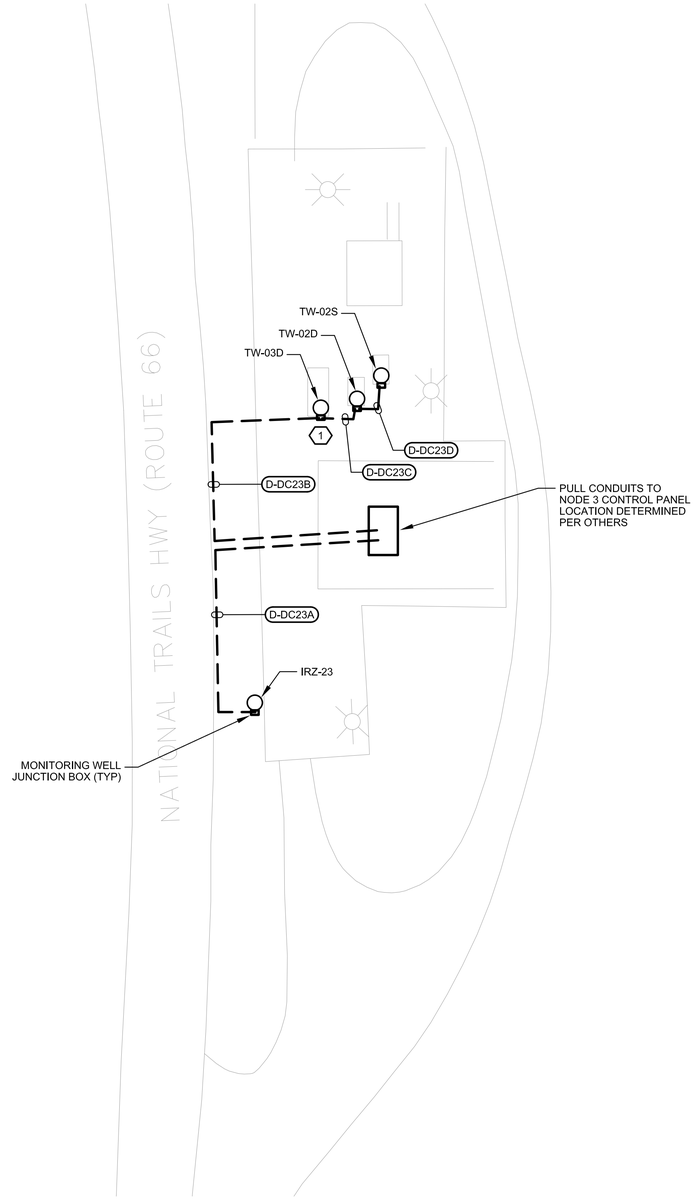

0 25 50 75

SCALE: 1"=25'

DATA COLLECTION STATION NODE 3 (2)(3)

N

- FINAL DESIGN - FOR AGENCY APPROVAL ONLY

REGISTERED PROFESSIONAL ENGINEER JOHN M. SIOCHI 20532 Exp. 9-30-17 ELECTRICAL STATE OF CALIFORNIA

FRISCH ENGINEERING, INC.
CONSULTING ELECTRICAL ENGINEERS
13405 FOLSOM BLVD, UNIT 600
FOLSOM, CA 95630
PH 916 353 1025
WWW.FRISCHENGINEERING.COM

ARCADIS

NO.	DATE	DESCRIPTION	GM/SPEC	DWN	CHKD	SUPV	APVD BY
1	11/18/15	FINAL DESIGN		MBY	TPF	JMS	RAO
0	9/8/14	PRE-FINAL (90%) DESIGN		MBY		TPF	

REVISIONS

APPROVED BY	
RAO	

SO	
SUPV	JMS
DSGN	MBY
DWN	MBY
CHKD	TPF
OK	JMS
DATE	
SCALES	N/A

TOPOCK GROUNDWATER REMEDIATION PROJECT
MONITORING WELL DATA COLLECTION SYSTEM SHEET 22
GAS TRANSMISSION & DISTRIBUTION
PACIFIC GAS AND ELECTRIC COMPANY
SAN FRANCISCO, CALIFORNIA

MICROFILM	
BILL OF MATL	
DWG LIST	
SUPSDS	
SUPSD BY	
SHEET NO.	of SHEETS
E-16-25	REV 0

PLOT DATE: Nov 04, 2015 PLOT TIME: 3:15:42pm
FILENAME: FE-E-XXX-16154D.dwg

N1808